PMNorthAnna3COLPEmails Resource

From: Mark Tonacci
Sent: Friday, February 27, 2009 10:20 AM
To: Ronaldo Jenkins
Cc: Thomas Kevern; Michael Eudy; Dennis Galvin; Jeffrey Cruz; Stephanie Coffin; Laura Dudes; Amar Pal; NorthAnna3COL Resource
Subject: Electrical GDC Questions - North Anna
Attachments: NA Electrical Question Status R1.xls; NA 8.2 RAI Resp 1-26 ML082170400.pdf; NA 8.2 Resp 27 & 28 ML083260325.pdf; NA 8.2 Resp 29-35 ML083390401.pdf; Electrical GDC 2, 4, 5 Staff Position ML090260030.htm; Elect GDCs Industry Position ML090220480.doc; NA RAI 1871 8.02-38 and 39.doc; NA RAI 1947 14.03.06-1.doc; NA RAI 1207 only Question 8.02-33.doc

Ronoldo,

As you know by now - we are "on" for the ESBWR call for Tuesday at 11:15 and Tom K sent the calendar appointment. The purpose of the call is to define where we disagree on the issues and clearly define them in preparation for a public meeting. If we can close the issues - all the better. There are no Design Cert issues in this area - only the COLA.

Below you will see a request from North Anna (RCOL) in preparation for the call asking for the basis of the management decision for the GDCs. I do not have the basis for the GDC 2/4 or 5 decision. Do you have it or can you get it from Laura and send to me so I can forward to North Anna?

Also attached is background material for your review prior to the call:

1. Excel file showing the 4 open RAIs to discuss,
2. North Anna RAI responses that we did not deem satisfactory for questions 8.02-16, 27, 29, and 33,
3. Staff open RAI on 8.02-33 (8.02-16 Supplement 1)
4. Staff open RAIs on 8.02 questions 38 (27S1) and 39 (29S1)
5. Staff open RAI on 14.03.06 question 1 (preliminary response given in DCWG -is it OK?)
6. Management GDC decision,
7. Industry position on GDCs.

As I told North Anna - I want to focus on the GDC issues first. Although we will likely have a room full on Tuesday, I assume you will do most of the talking and I will facilitate. My counterpart at North Anna will attempt to do the same.

Let's hope we have a productive call. Do you need anything more from me??

Mark

From: Regina.Borsh@dom.com [mailto:Regina.Borsh@dom.com]
Sent: Thursday, February 26, 2009 7:01 PM
To: Mark Tonacci
Cc: NorthAnna3COL Resource; John Disosway; Tom Hicks; Marc Hotchkiss; Spence Semmes; Joe Hegner; Norm Peterson; bugocill@dteenergy.com; Lashawn Green; John Hayden; Thomas Kevern
Subject: Re: Electrical GDC Questions

Thanks for the list, Mark.

We'd like to discuss all four RAIs that you consider open:

GDC 5 applicability (RAIs 8.2-33): In order to discuss GDC 5, we would like to know the basis for the NRC's decision that GDC 2 and 4 are not applicable. If possible, could you please provide this information to us before the call, so that we can review it?

Impact of U3 trip on switchyard (RAI 8.2-38): We'd like to know what level of detail is being requested.

Underground cable and testing (RAI 8.2-39): We do not have any operating experience that indicates that this is an issue for high voltage cable. We'd like to review the data that supports your statement.

Offsite power ITAAC (RAI 14.3.6-1): Our RAI response will provide essentially the same ITAAC that we presented in the NRC - DCWG meeting on this topic, with some modifications of the terms onsite and offsite power (vs. PPS). In our call, we'd like to know if you have any comments on the proposal we presented in the meeting.

Please let me know if you have any questions on the above.

Thanks,

Gina

From: Mark Tonacci [Mark.Tonacci@nrc.gov]
Sent: 02/26/2009 12:52 PM EST
To: Regina Borsh
Cc: NorthAnna3COL Resource <NorthAnna3COL.Resource@nrc.gov>
Subject: Electrical GDC Questions

Ginna,

Attached is a list of 4 RAIs on offsite power (8.2) that are currently open for North Anna. I think only the first two are related to the GDC issues we have been working on.

Please take a look at the list and let me know which ones you think are related to the escalated GDC issues we are working on and where we may not be in agreement. I do not mind discussing others but want to focus first on the tough issues we have been discussing for months. I am optimistic that you will say we only have 1 or 2 RAIs to discuss.

Please let me know as soon as you can so we can both prepare for Tuesday's 11:15 call.

Mark

CONFIDENTIALITY NOTICE: This electronic message contains information which may be legally confidential and or privileged and does not in any case represent a firm ENERGY COMMODITY bid or offer relating thereto which binds the sender without an additional express written confirmation to that effect. The information is intended solely for the individual or entity named above and access by anyone else is unauthorized. If you are not the intended recipient, any disclosure, copying, distribution, or use of the contents of this information is prohibited and may be unlawful. If you have received this electronic transmission in error, please reply immediately to the sender that you have received the message in error, and delete it. Thank you.

Hearing Identifier: NorthAnna3_Public_EX
Email Number: 664

Mail Envelope Properties (C56E360E9D804F4B95BC673F886381E71D99BB08F9)

Subject: Electrical GDC Questions - North Anna
Sent Date: 2/27/2009 10:19:56 AM
Received Date: 2/27/2009 10:20:04 AM
From: Mark Tonacci

Created By: Mark.Tonacci@nrc.gov

Recipients:
"Thomas Kevern" <Thomas.Kevern@nrc.gov>
Tracking Status: None
"Michael Eudy" <Michael.Eudy@nrc.gov>
Tracking Status: None
"Dennis Galvin" <Dennis.Galvin@nrc.gov>
Tracking Status: None
"Jeffrey Cruz" <Jeffrey.Cruz@nrc.gov>
Tracking Status: None
"Stephanie Coffin" <Stephanie.Coffin@nrc.gov>
Tracking Status: None
"Laura Dudes" <Laura.Dudes@nrc.gov>
Tracking Status: None
"Amar Pal" <Amar.Pal@nrc.gov>
Tracking Status: None
"NorthAnna3COL Resource" <NorthAnna3COL.Resource@nrc.gov>
Tracking Status: None
"Ronaldo Jenkins" <Ronaldo.Jenkins@nrc.gov>
Tracking Status: None

Post Office: HQCLSTR02.nrc.gov

Files	**Size**	**Date & Time**
MESSAGE	4631	2/27/2009 10:20:04 AM
NA Electrical Question Status R1.xls	34810	
NA 8.2 RAI Resp 1-26 ML082170400.pdf	2333498	
NA 8.2 Resp 27 & 28 ML083260325.pdf	292211	
NA 8.2 Resp 29-35 ML083390401.pdf	1891930	
Electrical GDC 2, 4, 5 Staff Position ML090260030.htm	17152	
Elect GDCs Industry Position ML090220480.doc	41466	
NA RAI 1871 8.02-38 and 39.doc	30714	
NA RAI 1947 14.03.06-1.doc	30202	
NA RAI 1207 only Question 8.02-33.doc	29690	

Options
Priority: Standard
Return Notification: No
Reply Requested: No
Sensitivity: Normal
Expiration Date:
Recipients Received:

North Anna RAIs		Status	Question	RAI	Question #	R	S	Comments	Issue
North Anna, Unit 3 - 08.02 - Offsite Powe	Application Specific	Responded	08.02-33	1207	4126			RAI Question 08.02-33 is RAI 8.2-16 S1 (Response ML083390401). Related to 8.2-16 (Resonse ML082170400)	GDC 5 does not apply.
North Anna, Unit 3 - 08.02 - Offsite Powe	Application Specific	Issued/Open Action Applicant	08.02-38	1871	7211			RAI Question 08.02-38 is RAI 8.2-27 S1; RAI 8.2-27 response ML083260325	Impact of U3 trip on switchyard not addressed.
North Anna, Unit 3 - 08.02 - Offsite Powe	Application Specific	Issued/Open Action Applicant	08.02-39	1871	7234			RAI Question 08.02-39; RAI 8.2-29 S1 RAI 8.2-29 response is ML083390401.	230Kv Underground cable testing and inspection.
North Anna, Unit 3 - 14.03.06 - Electrical	Application Specific	Issued/Open Action Applicant	14.03.06-1	1947	7666			No response yet - Issued mid Feb.	Off site power ITAAC request.

Eugene S. Grecheck
Vice President
Nuclear Development

Dominion Energy, Inc. • Dominion Generation
Innsbrook Technical Center
5000 Dominion Boulevard, Glen Allen, VA 23060
Phone: 804-273-2442, Fax: 804-273-3903
E-mail: Eugene.Grecheck@dom.com

Dominion®

July 28, 2008

U. S. Nuclear Regulatory Commission
Attention: Document Control Desk
Washington, D. C. 20555

Serial No. NA3-08-056R
Docket No. 52-017
COL/JPH

DOMINION VIRGINIA POWER
NORTH ANNA UNIT 3 COMBINED LICENSE APPLICATION
RESPONSE TO REQUEST FOR ADDITIONAL INFORMATION LETTER 009

On June 13, 2008, the NRC requested additional information to support the review of certain portions of the North Anna Unit 3 Combined License Application (COLA). The responses to the following RAIs are provided in Enclosures 1 through 26:

- RAI Question 08.02-1 Switchyard Figure Discrepancy
- RAI Question 08.02-2 Cable Routing Intermediate
- RAI Question 08.02-3 Intermediate Transformer Rating
- RAI Question 08.02-4 Potential Cable Degradation
- RAI Question 08.02-5 500kV Transmission and Bus Ratings
- RAI Question 08.02-6 Additional Transformer Protection
- RAI Question 08.02-7 Protective Relay Acceptance
- RAI Question 08.02-8 Industry Standards for Switchyard
- RAI Question 08.02-9 Transformer Testing Inclusion
- RAI Question 08.02-10 Multiple Facility Contingencies
- RAI Question 08.02-11 Stability Analysis for 34.5Kv Switchyard
- RAI Question 08.02-12 20 Year Grid Outage History
- RAI Question 08.02-13 Clarify Tech Spec Reference
- RAI Question 08.02-14 System Impact Study-Light versus Heavy Load
- RAI Question 08.02-15 Grid Frequency Variation
- RAI Question 08.02-16 GDC-5 Applicability
- RAI Question 08.02-17 GDC-4 Applicability
- RAI Question 08.02-18 GDC-2 Applicability
- RAI Question 08.02-19 10CFR 50.65(a)(4) Applicability
- RAI Question 08.02-20 BTP 8-3 Applicability
- RAI Question 08.02-21 BTP 8-5 Applicability
- RAI Question 08.02-22 BTP 8-6 Applicability

D089
NRO

- RAI Question 08.02-23 Transmission Reliability Consistent with PRA
- RAI Question 08.02-24 Station Ground Grid Description
- RAI Question 08.02-25 Surge and Lighting Protection Description
- RAI Question 08.02-26 Unit 1 & 2 Grid Stability Impact with Addition of Unit 3

This information will be incorporated into a future submission of the North Anna Unit 3 COLA, as described in the Enclosures.

Please contact Regina Borsh at (804) 273-2247 (regina.borsh@dom.com) if you have questions.

Very truly yours,

Eugene S. Grecheck

COMMONWEALTH OF VIRGINIA

COUNTY OF HENRICO

The foregoing document was acknowledged before me, in and for the County and Commonwealth aforesaid, today by Eugene S. Grecheck, who is Vice President-Nuclear Development of Virginia Electric and Power Company (Dominion Virginia Power). He has affirmed before me that he is duly authorized to execute and file the foregoing document on behalf of the Company, and that the statements in the document are true to the best of his knowledge and belief.

Acknowledged before me this 28th day of July, 2008
My registration number is 7173057 and my
Commission expires: August 31, 2012

Notary Public

WANDA E. MARSHALL
Notary Public
Commonwealth of Virginia
7173057
My Commission Expires Aug 31, 2012

Enclosures:

1. Response to RAI Letter 009, RAI Question 08.02-1
2. Response to RAI Letter 009, RAI Question 08.02-2
3. Response to RAI Letter 009, RAI Question 08.02-3
4. Response to RAI Letter 009, RAI Question 08.02-4
5. Response to RAI Letter 009, RAI Question 08.02-5
6. Response to RAI Letter 009, RAI Question 08.02-6
7. Response to RAI Letter 009, RAI Question 08.02-7
8. Response to RAI Letter 009, RAI Question 08.02-8
9. Response to RAI Letter 009, RAI Question 08.02-9
10. Response to RAI Letter 009, RAI Question 08.02-10
11. Response to RAI Letter 009, RAI Question 08.02-11
12. Response to RAI Letter 009, RAI Question 08.02-12
13. Response to RAI Letter 009, RAI Question 08.02-13
14. Response to RAI Letter 009, RAI Question 08.02-14
15. Response to RAI Letter 009, RAI Question 08.02-15
16. Response to RAI Letter 009, RAI Question 08.02-16
17. Response to RAI Letter 009, RAI Question 08.02-17
18. Response to RAI Letter 009, RAI Question 08.02-18
19. Response to RAI Letter 009, RAI Question 08.02-19
20. Response to RAI Letter 009, RAI Question 08.02-20
21. Response to RAI Letter 009, RAI Question 08.02-21
22. Response to RAI Letter 009, RAI Question 08.02-22
23. Response to RAI Letter 009, RAI Question 08.02-23
24. Response to RAI Letter 009, RAI Question 08.02-24
25. Response to RAI Letter 009, RAI Question 08.02-25
26. Response to RAI Letter 009, RAI Question 08.02-26

Commitments made by this letter:

1. Incorporate proposed changes in a future COLA submission.

cc: U. S. Nuclear Regulatory Commission, Region II
T. A. Kevern, NRC
J. T. Reece, NRC
J. J. Debiec, ODEC
G. A. Zinke, NuStart/Entergy
T. L. Williamson, Entergy
R. Kingston, GEH
K. Ainger, Exelon
P. Smith, DTE

ENCLOSURE 1

Response to NRC RAI Letter 009

RAI Question 08.02-1

NRC RAI 08.02-1

Staff review of FSAR Chapter 8 Figure 8.2-201 indicates a discrepancy with corresponding DCD Rev. 4 Figure 8.1-1. In Figure 8.1-1, main generator circuit breaker is shown as part of onsite power system while the same breaker is shown in intermediate switchyard in Figure 8.2-201. Also, in Figure 8.1-1, main transformer and unit auxiliary transformers (UATs) are connected at the high voltage side of main transformer; however, in Figure 8.2-201, UATs high side voltage is 230 kV and main transformer's high side voltage is 500 kV and it is not clear how the connection can be made with different voltages. Please clarify the apparent discrepancies.

Dominion Response

Main Generator Circuit Breaker Location

DCD Figure 8.1-1 is a functional depiction of the ESBWR electrical power distribution system. The figure correctly shows the main generator circuit breaker as part of the onsite power distribution system. The main generator circuit breaker is physically located in the NAPS intermediate switchyard. FSAR Figure 8.2-201, which depicts the NAPS 500/230 kV switchyard and also shows certain equipment as within the NAPS intermediate switchyard (including the main generator circuit breaker) will be revised to remove the main generator circuit breaker symbol from the figure. A note will be added to clarify the interface between the DCD Figure 8.1-1 and FSAR Figure 8.2-201.

Transformer Voltages

DCD Figure 8.1-1 is a functional depiction of the ESBWR electrical power distribution system. The figure contains a "match line" dividing the offsite from onsite power systems. The Onsite Power System is that portion of the electrical power distribution system design being certified as part of the DCD (i.e., the standard plant design). The offsite power distribution system, that is, the switchyard design, and the normal and alternate preferred power supplies, is site-specific as indicated in DCD Section 8.2.

As such, the standard plant design does not specify the voltage level on the high side of the unit auxiliary transformers (UATs) or reserve auxiliary transformers (RATs). Rather, this is a site-specific determination. At North Anna, the high voltage side of the UATs and RATs will be at 230 kV and the generator step-up transformers (GSUs) will be at 500 kV on the high side. Because of this, a 500/230 kV transformer bank will be located in the Intermediate Switchyard to step down 500 kV to 230 kV for use by the UATs and RATs, as depicted in FSAR Figure 8.2-201.

A note will be added to FSAR Figure 8.2-201 to clarify that equipment on the Offsite Power portion of FSAR Figure 8.2-201 replaces equipment on the Offsite Power portion of DCD Figure 8.1-1.

In addition to the 2 notes being added to Figure 8.2-201 as a result of this RAI response, the new 500 kV bay, which ties in the new Ladysmith transmission line for Unit 3, has been added to this figure.

Proposed COLA Revision

FSAR Figure 8.2-201 will be revised as shown in the attached markup.

Markup of North Anna COLA

The attached markup represents Dominion's good faith effort to show how the COLA will be revised in a future COLA submittal in response to the subject RAI. However, the same COLA content may be impacted by revisions to the ESBWR DCD, responses to other COLA RAIs, other COLA changes, plant design changes, editorial or typographical corrections, etc. As a result, the final COLA content that appears in a future submittal may be somewhat different than as presented herein.

~~Figure 8.2-201 – 500/230 kV Switchyard Single-Line Diagram~~

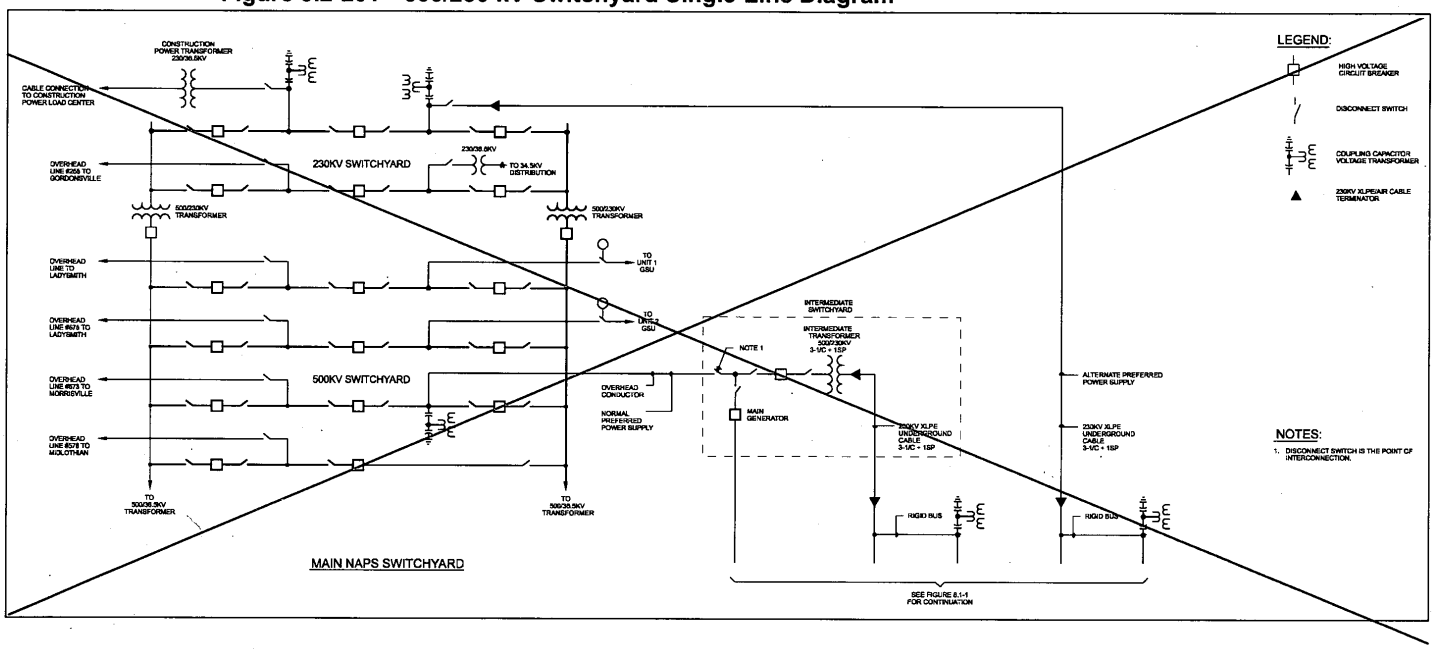

NAPS COL 8.2.4-A Figure 8.2-201 500/230 kV Switchyard Single-Line Diagram

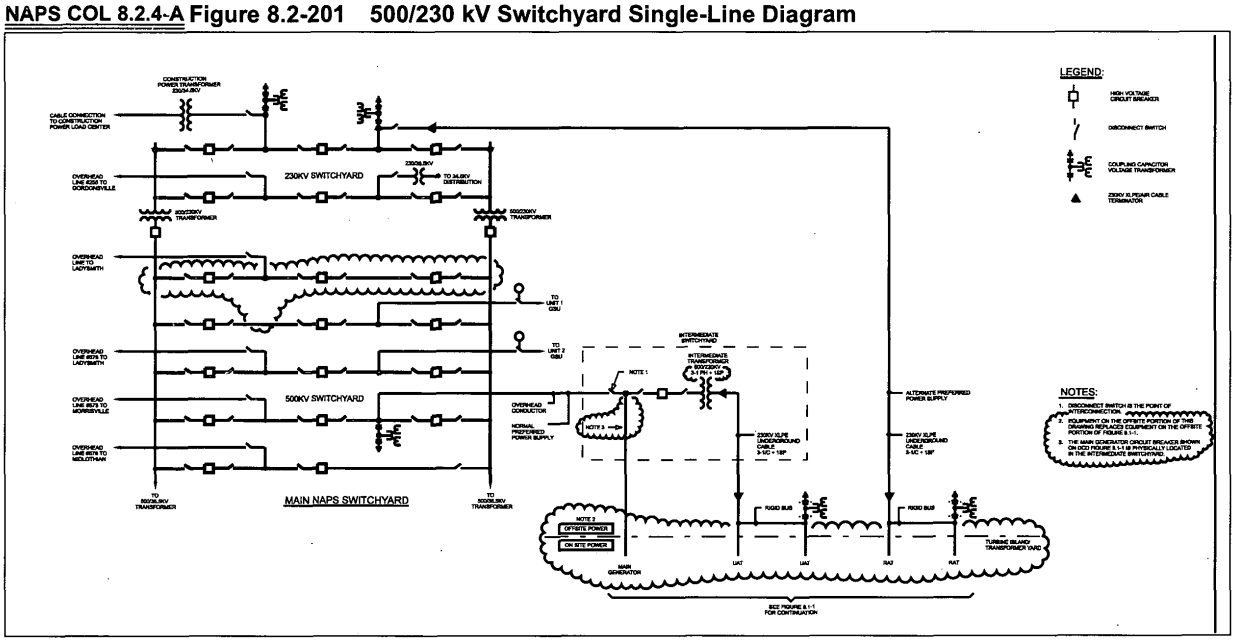

ENCLOSURE 2

Response to NRC RAI Letter 009

RAI Question 8.02-2

NRC RAI 8.02-2

FSAR Section 8.2.1.2 addresses the routing of power cables. DCD, Rev. 4, Section 8.2.3 states that the normal preferred circuit and alternate preferred circuit are electrically independent and are physically separated from each other. Staff review indicates that Section 8.2.1.2 does not address the independence and separation of control and instrumentation cables. Please provide a discussion regarding the routing of control and instrumentation cables, and miscellaneous power cables associated with normal and alternate preferred circuits, between the switchyard and the power block.

Dominion Response

As described in DCD Section 8.2.3, control, instrumentation, and miscellaneous power cables associated with the normal and alternate preferred circuits are routed in duct bank between the power block and the Intermediate Switchyard. Adequate separation is ensured by either routing cables associated with the normal preferred circuit in a separate duct bank from cables associated with the alternate preferred circuit, or by routing these cables in separate conduits within the same duct bank.

Proposed COLA Revision

FSAR Section 8.2.1.2 will be revised to add a description of the routing of control, instrumentation, and miscellaneous power cables as indicated in the attached markup.

Markup of North Anna COLA

The attached markup represents Dominion's good faith effort to show how the COLA will be revised in a future COLA submittal in response to the subject RAI. However, the same COLA content may be impacted by revisions to the ESBWR DCD, responses to other COLA RAIs, other COLA changes, plant design changes, editorial or typographical corrections, etc. As a result, the final COLA content that appears in a future submittal may be somewhat different than as presented herein.

lines from offsite power sources is shown in Figure 8.2-202. Figure 8.2-203 maps the offsite transmission lines.

The transmission lines and towers connecting the switchyard to the transmission system are as follows:

- Two 500 kV overhead lines to the Ladysmith substation (approximately 15 miles)
- A 500 kV overhead line to the Midlothian substation (approximately 41 miles)
- A 500 kV overhead line to the Morrisville substation (approximately 33 miles)
- A 230 kV overhead line to the Gordonsville substation (approximately 31 miles)

The two Ladysmith lines (one of which was constructed for Units 1 and 2) utilize a common right-of-way. Each of the other lines utilizes separate rights-of-way. The 230 kV Gordonsville line crosses under the 500 kV Ladysmith and Morrisville lines near the switchyard.

Transmission tower separation, line installation, and clearances are consistent with the National Electric Safety Code (NESC) and Dominion transmission line standards. Basic tower structural design parameters, including the number of conductors, height, materials, color, and finish are consistent with Dominion transmission line design standards. Adequate clearance exists between wire galloping ellipses to minimize conductor or structure damage. (Reference 8.2.202)

8.2.1.2 **Offsite Power System**

Replace the first paragraph with the following.

NAPS COL 8.2.4-3-A
NAPS COL 8.2.4-4-A

The offsite power system is a nonsafety-related system. Power is supplied to the plant from multiple independent and physically separate offsite power sources. The normal preferred power source is any one of the four 500 kV lines, and the alternate preferred power source is any other one of the four 500 kV lines.

The normal preferred power source is supplied to the UATs through the intermediate transformer, MODs and isolation circuit breakers. The normal preferred power interface with the offsite power system occurs at the incoming disconnect switch of the intermediate switchyard. The MOD

feeding a faulted UAT will be opened after the UAT high voltage breaker opens.

Underground cables connect the normal and alternate preferred power sources to the UATs and RATs, respectively. To maintain their independence from each other, the underground cables are routed in duct banks and are physically and electrically separate from each other.

Control, instrumentation, and miscellaneous power cables associated with the normal and alternate preferred circuits are routed in duct bank between the power block and the Intermediate Switchyard. Adequate separation is ensured by either routing cables associated with the normal preferred circuit in a separate duct bank from cables associated with the alternate preferred circuit, or by routing these cables in separate conduits within the same duct bank.

Periodic monitoring of cable insulation for underground medium and high voltage cable will be conducted to detect potential cable degradation from moisture intrusion using one of the following methods: partial discharge testing, time domain reflectometry, dissipation factor testing, or very low frequency AC testing.

The capacity and electrical characteristics for switchyard equipment are as follows:

Transformers	Voltage Rating	MVA Rating
Transformer	500/230 kV	67.2/89.6/112
Transformer	500/230 kV	112/145

Breakers	Max Design (kV)	Rated Current (A)	Interrupting Current at Max kV
500 kV	550	3000	40 kAIC
230 kV	242	2000	40 kAIC

Transmission Lines	Rated Current at 100°F
500 kV	3954A
230 kV	2190A

ENCLOSURE 3

Response to NRC RAI Letter 009

RAI Question 8.02-3

NRC RAI 8.02-3

FSAR Section 8.2 Figure 8.2-201 includes an intermediate transformer located in intermediate switchyard. Please provide the MVA rating of the intermediate transformer.

Dominion Response

The intermediate transformer consists of three single-phase autotransformers rated at 112 MVA each.

Proposed COLA Revision

None.

ENCLOSURE 4

Response to NRC RAI Letter 009

RAI Question 8.02-4

NRC RAI 8.02-4

FSAR Section 8.2.1.2 states that underground cables connect the normal and alternate preferred power sources to the UATs and reserve auxiliary transformers (RATs). Since underground cables are susceptible to moisture, please identify the design features and/or in-situ monitoring programs that will be implemented to avoid or arrest the degradation of the cable insulation from the effects of moisture.

Dominion Response

The normal preferred power supply and alternate preferred power supply both use 230 kV cable. This cable is designed for underground application.

Periodic monitoring of cable insulation for underground medium and high voltage cable will be conducted to detect potential cable degradation from moisture intrusion using one of the following methods or an equivalent: partial discharge testing, time domain reflectometry, dissipation factor testing, or very low frequency AC testing.

Proposed COLA Revision

FSAR Section 8.2.1.2 will be revised to add information on cable testing as indicated in the attached markup.

Markup of North Anna COLA

The attached markup represents Dominion's good faith effort to show how the COLA will be revised in a future COLA submittal in response to the subject RAI. However, the same COLA content may be impacted by revisions to the ESBWR DCD, responses to other COLA RAIs, other COLA changes, plant design changes, editorial or typographical corrections, etc. As a result, the final COLA content that appears in a future submittal may be somewhat different than as presented herein.

lines from offsite power sources is shown in Figure 8.2-202. Figure 8.2-203 maps the offsite transmission lines.

The transmission lines and towers connecting the switchyard to the transmission system are as follows:

- Two 500 kV overhead lines to the Ladysmith substation (approximately 15 miles)
- A 500 kV overhead line to the Midlothian substation (approximately 41 miles)
- A 500 kV overhead line to the Morrisville substation (approximately 33 miles)
- A 230 kV overhead line to the Gordonsville substation (approximately 31 miles)

The two Ladysmith lines (one of which was constructed for Units 1 and 2) utilize a common right-of-way. Each of the other lines utilizes separate rights-of-way. The 230 kV Gordonsville line crosses under the 500 kV Ladysmith and Morrisville lines near the switchyard.

Transmission tower separation, line installation, and clearances are consistent with the National Electric Safety Code (NESC) and Dominion transmission line standards. Basic tower structural design parameters, including the number of conductors, height, materials, color, and finish are consistent with Dominion transmission line design standards. Adequate clearance exists between wire galloping ellipses to minimize conductor or structure damage. (Reference 8.2.202)

8.2.1.2 Offsite Power System

Replace the first paragraph with the following.

NAPS COL 8.2.4-3-A
NAPS COL 8.2.4-4-A

The offsite power system is a nonsafety-related system. Power is supplied to the plant from multiple independent and physically separate offsite power sources. The normal preferred power source is any one of the four 500 kV lines, and the alternate preferred power source is any other one of the four 500 kV lines.

The normal preferred power source is supplied to the UATs through the intermediate transformer, MODs and isolation circuit breakers. The normal preferred power interface with the offsite power system occurs at the incoming disconnect switch of the intermediate switchyard. The MOD

feeding a faulted UAT will be opened after the UAT high voltage breaker opens.

Underground cables connect the normal and alternate preferred power sources to the UATs and RATs, respectively. To maintain their independence from each other, the underground cables are routed in duct banks and are physically and electrically separate from each other.

Control, instrumentation, and miscellaneous power cables associated with the normal and alternate preferred circuits are routed in duct bank between the power block and the Intermediate Switchyard. Adequate separation is ensured by either routing cables associated with the normal preferred circuit in a separate duct bank from cables associated with the alternate preferred circuit, or by routing these cables in separate conduits within the same duct bank.

Periodic monitoring of cable insulation for underground medium and high voltage cable will be conducted to detect potential cable degradation from moisture intrusion using one of the following methods: partial discharge testing, time domain reflectometry, dissipation factor testing, or very low frequency AC testing.

The capacity and electrical characteristics for switchyard equipment are as follows:

Transformers	Voltage Rating	MVA Rating
Transformer	500/230 kV	67.2/89.6/112
Transformer	500/230 kV	112/145

Breakers	Max Design (kV)	Rated Current (A)	Interrupting Current at Max kV
500 kV	550	3000	40 kAIC
230 kV	242	2000	40 kAIC

Transmission Lines	Rated Current at 100°F
500 kV	3954A
230 kV	2190A

ENCLOSURE 5

Response to NRC RAI Letter 009

RAI Question 8.02-5

NRC RAI 8.02-5

FSAR Section 8.2.1.2 identifies that the 500 kV transmission line rated current is 3954 amps and the 500 kV bus is rated as 3891 amps. Please explain why the bus rating is less than the transmission line rating and clarify the actual loading of the line and bus.

Dominion Response

Switchyard buswork and transmission lines are rated according to their electrical characteristics. Since the ratings do not match exactly for these two different types of conductors, the switchyard designers select the cable and buswork for the projected load.

The North Anna switchyard is arranged in a breaker and a half scheme such that the power from each transmission line is divided between buses 1 and 2. The exact division is variable depending on the status of the breakers within the switchyard and the connected generation. Hence, the exact load on each bus in the switchyard is also variable.

Each transmission line entering the switchyard has a normal load and an emergency load for planning and operation purposes. The lines are loaded as follows:

Line 573, Morrisville – 2598 A normal load, 3377 A emergency load
Line 575, Ladysmith – 2598 A normal load, 3118 A emergency load
Line 576, Midlothian – 2598 A normal load, 2910 A emergency load

The Regional Transmission Organization (RTO) system operator is responsible for constantly monitoring the transmission system and operating it to maintain the entire system within its normal ratings. The transmission system loading is typically maintained at the normal levels and up to the emergency levels during system upsets. This line loading prevents overload of the buswork in the switchyard.

Both Dominion and PJM, the RTO, perform periodic studies to evaluate changes and proposed additions to the transmission system. These studies verify that infrastructure, such as the buswork and transmission lines at the North Anna switchyard, are capable of being operated within their ratings.

Proposed COLA Revision

None.

ENCLOSURE 6

Response to NRC RAI Letter 009

RAI Question 8.02-6

NRC RAI 8.02-6

FSAR Section 8.2.1.2.2 states that all transformers are protected with differential and over-current relay schemes. Information Notice 2005-15 addresses provision of sudden pressure relay and ground fault protection for transformers. Please discuss provision of such transformer protection. In addition, if the transformer neutrals are high-resistance grounded, please discuss what monitoring schemes are implemented for detection of ground faults in the system.

Dominion Response

Note: A telephone call between Dominion and the NRC on July 1, 2008 deleted Information Notice 2005-015 from RAI question 8.02-6 and substituted IEEE-141 and IEEE-242.

Transformers 1, 2, 3, 5, and 6 in the North Anna switchyard are protected by sudden pressure relays (SPR).

Transformers 1 and 2 have solid grounds on their 500 kV, wye connected windings. The 34.5 kV, delta connected windings have zig-zag transformers connected on the bus creating a ground source. This ground source is monitored by relays for ground fault detection. Differential relays applied across these transformers also provide ground fault protection.

Transformer 3 is not grounded on its 230 kV, delta connected winding as it is connected to transmission equipment only. The 34.5 kV, wye connected winding of Transformer 3 is solidly grounded. A relay monitors this ground for fault detection. A differential relay is also applied around Transformer 3. Since this transformer has no tertiary winding, the differential relay also provides ground fault protection.

Transformer 5 is solidly grounded. Differential relays are applied to the 230 kV winding and the 34.5 kV winding. Since this transformer has no tertiary winding, these differential relays provide ground fault protection.

Transformer 6 is solidly grounded. Differential protection is provided by redundant relays. Since this transformer has no tertiary winding, these differential relays provide ground fault protection.

Transformer protection in the North Anna switchyard is generally in accordance with IEEE C37.91, "Guide for Protective Relay Applications to Power Transformers."

Proposed COLA Revision

None.

ENCLOSURE 7

Response to NRC RAI Letter 009

RAI Question 8.02-7

NRC RAI 8.02-7

FSAR Section 8.2.1.2.2 addresses protective relaying. DCD, Rev.4, Section 8.2.4, Item 8.2.4-5-A identifies that the COL applicant is responsible for switchyard protective relaying and will ensure such relaying is coordinated, reviewed, and accepted by the applicable grid reliability organization. Please discuss how such coordination, review, and acceptance by the applicable grid reliability organization is to be accomplished.

Dominion Response

Dominion is responsible for engineering, constructing, operating and maintaining the electric transmission system and interfacing with the Regional Transmission Organization (RTO), PJM. This responsibility includes the design, maintenance, and operation of the switchyard protective relaying that will be required by the interconnection of Unit 3 to the North Anna switchyard.

PJM studied the interconnection of Unit 3 into the North Anna switchyard and recommended no additional requirements above the typical design requirements used by Dominion in the design of the protective relaying scheme at the North Anna switchyard. Therefore, PJM did not require separate review and approval of the protective relaying scheme for interconnection of Unit 3 at the North Anna switchyard.

Proposed COLA Revision

FSAR Section 8.2.1.2.2 will be revised to explain the coordination, review, and acceptance process for switchyard protective relaying as shown in the attached markup.

Markup of North Anna COLA

The attached markup represents Dominion's good faith effort to show how the COLA will be revised in a future COLA submittal in response to the subject RAI. However, the same COLA content may be impacted by revisions to the ESBWR DCD, responses to other COLA RAIs, other COLA changes, plant design changes, editorial or typographical corrections, etc. As a result, the final COLA content that appears in a future submittal may be somewhat different than as presented herein.

Bus Work	Rated Current at 100°F
500 kV	3891A
230 kV	2750A

8.2.1.2.1 Switchyard

Replace the last paragraph with the following.

NAPS COL 8.2.4-2-A
NAPS COL 8.2.4-6-A
NAPS COL 8.2.4-7-A
NAPS COL 8.2.4-8-A

The NAPS switchyard, prior to the point of interconnection with Unit 3, is a 500/230 kV, air-insulated, breaker-and-a-half bus arrangement. Unit 3 is connected to this switchyard by an overhead conductor circuit.

The physical location and electrical interconnection of the switchyard is shown on Figure 8.2-201 and Figure 8.2-202.

Control and relay protection systems are provided. Support systems, such as grounding, raceway, lighting, AC/DC station service, and switchyard lightning protection, are also provided.

The North Anna switchyard uses surge suppressors on the high and low sides of Transformers 1, 2, 3, 5, and 6. The insulation coordination and surge protective devices are applied in compliance with IEEE 1313.2 2004, "IEEE Guide for the Application of Insulation Coordination," and IEEE C62.22 2003, "IEEE Guide for the Application of Metal Oxide Surge Arrester for Alternating Current Systems." The surge protective devices are maintained according to NEMA requirements and manufacturer's recommendations.

A shield wire arrangement is designed for lightning abatement in the switchyard in accordance with IEEE 62.22 2003, "IEEE Guide for the Application of Metal Oxide Surge Arrestors for Alternating Current Systems," IEEE 988-2000, "Guide to Direct Lightning Shielding of Substations," and "Insulation Coordination for Power Systems."

~~**NAPS SUP 8.2-1**~~
NAPS COL 8.2.4-5-A

8.2.1.2.2 Protective Relaying

The 500 kV transmission lines are protected with redundant high-speed relay schemes with re-closing and communication equipment to minimize line outages. The 500 kV switchyard buses have redundant bus differential protection using separate and independent current and control circuits. Generating unit tie-lines and auxiliary transformer underground cable circuits are protected with redundant high-speed relay schemes.

Transformers are protected with differential and over-current relay schemes.

RAI NA3 08.02-7
(Draft 07/24/08)

Dominion is responsible for engineering, constructing, operating, and maintaining its electric transmission system, and for interfacing with PJM, the Regional Transmission Organization (RTO). Dominion's responsibility includes designing, maintaining, and operating all switchyard protective relaying associated with connecting Unit 3 to the North Anna switchyard. PJM studied the interconnection of Unit 3 to the North Anna switchyard and recommended no additional design requirements above those typically used by Dominion in the design of the protective relaying scheme at the switchyard.

Breakers are equipped with dual trip coils. Each redundant protection circuit that supplies a trip signal is powered from its redundant DC power load group and connected to a separate trip coil. Equipment and cabling associated with each redundant system is physically separated from its redundant counterpart. Breakers are provided with a breaker failure scheme that isolates a breaker that fails to trip due to a malfunction.

NAPS SUP 8.2-2

8.2.1.2.3 Testing and Inspection

Transmission lines are inspected via an aerial inspection program approximately twice per year. The inspection focuses on such items as right-of-way encroachment, vegetation management, conductor and line hardware condition, and the condition of supporting structures.

Routine switchyard inspection activities include, but are not necessarily limited to, the following:

- Daily transformer inspections
- Periodic inspections of circuit breakers and batteries
- Quarterly infrared scans
- Semi-annual infrared scans (relay panels)
- Semi-annual inspection of substation equipment
- Annual infrared scans
- Annual corona camera scan

Routine switchyard testing activities include, but are not necessarily limited to, the following:

NA3 RAI 08.02-9
(Draft 07/16/08)

- Semiannual dissolved gas analysis on transformers

ENCLOSURE 8

Response to NRC RAI Letter 009

RAI Question 8.02-8

NRC RAI 8.02-8

FSAR Section 8.2. Please discuss the industry (FERC, NERC, and IEEE) standards that will be followed for switchyard protection system, monitoring, maintenance and testing. In addition, please confirm that generator circuit breakers will meet the requirements of IEEE Standard C37.013.

Dominion Response

Monitoring, maintenance and testing of the switchyard protection system are performed under NERC's Standard PRC-005-1, Transmission and Generation Protection System Maintenance and Testing, Standard PRC-008-0, Underfrequency Load Shedding Equipment Maintenance Program, and Standard PRC-017-0, Special Protection System Maintenance and Testing.

IEEE C37.013, "IEEE Standard for AC High Voltage Generator Circuit Breakers Rated on a Symmetrical Current Basis," was written specifically for high current circuit breakers installed between generators and transformer terminals. The proposed Unit 3 at North Anna places the circuit breaker on the high side terminals of the Generator Step Up (GSU) transformers and not between the generator and the GSUs. Thus, IEEE C37.013 does not directly apply. IEEE C37.010, "IEEE Application Guide for AC High Voltage Circuit Breakers Rated on a Symmetrical Current Basis," is the directly applicable IEEE document for this application and is the document referenced in the DCD Section 8.3.1.1 for sizing and design.

Proposed COLA Revision

FSAR Section 8.2.1.2.3 will be revised to include a discussion of the industry standards used for monitoring, maintenance, and testing of the switchyard protection system as shown in the attached markup.

Markup of North Anna COLA

The attached markup represents Dominion's good faith effort to show how the COLA will be revised in a future COLA submittal in response to the subject RAI. However, the same COLA content may be impacted by revisions to the ESBWR DCD, responses to other COLA RAIs, other COLA changes, plant design changes, editorial or typographical corrections, etc. As a result, the final COLA content that appears in a future submittal may be somewhat different than as presented herein.

- Biennial circuit breaker profile or timing tests
- Biennial 500 kV relay testing
- Triennial 230 kV relay testing
- 4-year dissolved gas analysis on transformer load tap changers
- 5-year battery discharge testing
- 8-year PT testing
- 8-year ground grid testing
- 10-year CCVT testing
- 10-year arrester testing
- 10-year wave trap testing

Switchyard protection system monitoring, maintenance, and testing are performed in accordance with North American Electric Reliability Corporation (NERC) Standard PRC-005-1, "Transmission and Generation Protection System Maintenance and Testing," Standard PRC-008-0, "Underfrequency Load Shedding Equipment Maintenance Program," and Standard PRC-017-0, "Special Protection System Maintenance and Testing."

8.2.2.1 Reliability and Stability Analysis

Replace this section with the following.

~~NAPS COL 8.2.4-5-A~~
NAPS COL 8.2.4-9-A

A system impact study analyzed load flow, transient stability and fault analysis for the addition of Unit 3. (Reference 8.2.201) The study was prepared using 2011 summer light-load and 2014 summer base-case projections.

The analysis was performed using Power Technology International Software PSS/E. The analysis examined conditions involving loss of the largest generating unit, loss of the most critical transmission line, and multiple facility contingencies. The study also examined import/export power flows between transmission system utilities.

NAPS COL 8.2.4-10A

The equipment considered is from the point of interconnection of Unit 3 to the switchyard out to the 500 kV transmission system. This included the 230 kV buses and interconnections. The 34.5 kV portion of the North Anna switchyard is not considered. Maximum and minimum switchyard voltage limits have been established for the 500 kV switchyard at 534 kV and 505 kV, respectively. Normal operating and abnormal procedures

ENCLOSURE 9

Response to NRC RAI Letter 009

RAI Question 8.02-9

NRC RAI 8.02-9

FSAR Section 8.2. Please address inclusion of transformer testing as part of the overall routine switchyard component testing.

Dominion Response

North Anna switchyard transformers have dissolved gas analysis (DGA) performed every 6 months. Additionally, if the transformer has a Load Tap Changer (LTC), DGA analysis is performed on the LTC every 4 years. Infrared scans are performed quarterly on transformers as indicated in FSAR Section 8.2.1.2.3.

Proposed COLA Revision

FSAR Section 8.2.1.2.3 will be revised to include the requirement to conduct semi-annual dissolved gas analysis on transformers and 4-year dissolved gas analysis on load tap changers as shown in the attached markup.

Markup of North Anna COLA

The attached markup represents Dominion's good faith effort to show how the COLA will be revised in a future COLA submittal in response to the subject RAI. However, the same COLA content may be impacted by revisions to the ESBWR DCD, responses to other COLA RAIs, other COLA changes, plant design changes, editorial or typographical corrections, etc. As a result, the final COLA content that appears in a future submittal may be somewhat different than as presented herein.

Transformers are protected with differential and over-current relay schemes.

Dominion is responsible for engineering, constructing, operating, and maintaining the electric transmission system. Because Dominion is the the switchyard protective relaying scheme designer and the applicable grid reliability organization, the coordination, review, and acceptance of the switchyard relaying scheme associated with the interconnection of Unit 3 is part of the review and approval process during initial design of the protective relaying scheme.

Breakers are equipped with dual trip coils. Each redundant protection circuit that supplies a trip signal is powered from its redundant DC power load group and connected to a separate trip coil. Equipment and cabling associated with each redundant system is physically separated from its redundant counterpart. Breakers are provided with a breaker failure scheme that isolates a breaker that fails to trip due to a malfunction.

NAPS SUP 8.2-2

8.2.1.2.3 **Testing and Inspection**

Transmission lines are inspected via an aerial inspection program approximately twice per year. The inspection focuses on such items as right-of-way encroachment, vegetation management, conductor and line hardware condition, and the condition of supporting structures.

Routine switchyard inspection activities include, but are not necessarily limited to, the following:

- Daily transformer inspections
- Periodic inspections of circuit breakers and batteries
- Quarterly infrared scans
- Semi-annual infrared scans (relay panels)
- Semi-annual inspection of substation equipment
- Annual infrared scans
- Annual corona camera scan

Routine switchyard testing activities include, but are not necessarily limited to, the following:

- Semiannual dissolved gas analysis on transformers
- Biennial circuit breaker profile or timing tests
- Biennial 500 kV relay testing

- Triennial 230 kV relay testing
- 4-year dissolved gas analysis on transformer load tap changers
- 5-year battery discharge testing
- 8-year PT testing
- 8-year ground grid testing
- 10-year CCVT testing
- 10-year arrester testing
- 10-year wave trap testing

Monitoring, maintenance, and testing of the switchyard protection system are performed under NERC Standard PRC-005-1, "Transmission and Generation Protection System Maintenance and Testing," Standard PRC-008-0, "Implementation and Documentation of Underfrequency Load Shedding Equipment Maintenance Program," and Standard PRC-017-0, "Special Protection System Maintenance and Testing."

8.2.2.1 Reliability and Stability Analysis

Replace this section with the following.

~~NAPS COL 8.2.4-5-A~~
NAPS COL 8.2.4-9-A

A system impact study analyzed load flow, transient stability and fault analysis for the addition of Unit 3. (Reference 8.2.201) The study was prepared using 2011 summer light-load and 2014 summer base-case projections.

The analysis was performed using Power Technology International Software PSS/E. The analysis examined conditions involving loss of the largest generating unit, loss of the most critical transmission line, and multiple facility contingencies. The study also examined import/export power flows between transmission system utilities.

NAPS COL 8.2.4-10A

The equipment considered is from the point of interconnection of Unit 3 to the switchyard out to the 500 kV transmission system. This included the 230 kV buses and interconnections. The 34.5 kV portion of the North Anna switchyard is not considered. Maximum and minimum switchyard voltage limits have been established for the 500 kV switchyard at 534 kV and 505 kV, respectively. Normal operating and abnormal procedures exist to maintain the switchyard voltage schedule and address challenges to the maximum and minimum limits. Upon approaching or exceeding a limit, these procedures verify available of required and

ENCLOSURE 10

Response to NRC RAI Letter 009

RAI Question 8.02-10

NRC RAI 8.02-10

FSAR Section 8.2.2.1 states "The analysis examined conditions involving loss of the largest generating unit, loss of the most critical transmission line, and multiple facility contingencies." Please clarify that the analysis addressed multiple facility contingencies (e.g., the analysis included tripping of all three nuclear units).

Dominion Response

The System Impact Study (SIS) referenced in COLA section 8.2.2.1 was performed to verify load flow capability, short circuit capability, and system stability of the local transmission system in the vicinity of the North Anna switchyard. The study was performed in accordance with NERC criteria. Individual cases are run to NERC Categories A, B, and C for No Contingency evaluations, N-1 evaluations, and N-2 evaluations, respectively. This level of detail meets the specific requirements of the Regional Transmission Organization (RTO), PJM, and assures that the local transmission system, including the North Anna switchyard, will continue to be a reliable power source.

NERC Category B includes N-1 contingencies such as a single line to ground fault or a three phase fault on a single transmission circuit, transformer, or generator with normal clearing. NERC Category C includes N-2 contingencies such as successive single line to ground faults or three phase faults with normal clearing, loss of two circuits on a common tower, or single line to ground faults with delayed clearing on a single transmission circuit, transformer, or generator.

The reviewer asks to clarify that the analysis addressed multiple facility contingencies. The reviewer also included an example of a multiple facility contingency event as a trip of all three nuclear units. NERC Category C is considered multiple facility contingencies. A NERC Category C case only considers tripping a single generator in conjunction with a stuck breaker or protection system failure. NERC Category D is considered an extreme event analysis and exceeds N-2. Analysis of a transmission system to NERC Category D is considered unusual. NERC Category D includes a case for loss of all generating units at a single station. The local transmission system that includes the North Anna switchyard has not been evaluated for loss of all generating units as this is considered to be an extreme case and is outside of the requirements of Dominion's transmission planning or the RTO.

A review of NRC Standard Review Plan 8.2, Section III.F indicates that grid stability analyses should consider normal conditions, N-1 events, and N-2 events. Specifically, the SRP states that "the analysis should consider the loss, through a single event, of the largest capacity being supplied to the grid, removal of the largest load from the grid, or loss of the most critical transmission line. This could be the total output of the station, the largest station on the grid, or possibly several large stations if these use a common transmission tower, transformer, or a breaker in a remote switchyard or substation." The generating units at North Anna do not use common transmission towers, transformers, or breakers. Therefore, extreme events represented in NERC Category D analyses are not applicable to North Anna.

Proposed COLA Revision

None.

ENCLOSURE 11

Response to NRC RAI Letter 009

RAI Question 8.02-11

NRC RAI 8.02-11

FSAR Section 8.2.2.1 states that stability analysis did not consider the 34.5 kV portion of the North Anna switchyard. The staff review identified the station auxiliary loads for all three units to be substantial. Please provide the basis, including identifying connected total (three units) station auxiliary loads, for excluding analysis of the 34.5 kV portion of the switchyard.

Dominion Response

The stability analysis discussed in FSAR Section 8.2.2.1 is an angular stability analysis that verifies stability of the transmission system when exposed to loss of selected transmission and generation assets. This study is performed at the transmission voltage level and would, as such, exclude loads operating at distribution voltage levels of 34.5 kV as they have limited ability to cause angular stability difficulties at the transmission level. This is the standard method for performing angular stability analysis by Dominion and PJM, the Regional Transmission Organization (RTO).

Proposed COLA Revision

None.

ENCLOSURE 12

Response to NRC RAI Letter 009

RAI Question 8.02-12

NRC RAI 8.02-12

FSAR Section 8.2.2.1 states that grid availability in the region over the past 20 years was examined and it was confirmed that the system has been highly reliable with minimal outages due to equipment failure. Please provide supporting information for this statement to include the frequency, duration, and causes of outages over the past 20 years for both the transmission system accepting the unit's output and the transmission system providing the preferred power for the unit's load.

Dominion Response

Dominion reviewed equipment failure history for the time period from 1988 to 2008. The major types of equipment that can affect reliability of the North Anna switchyard are transmission lines, transformers, and specific circuit breakers within the switchyard.

Transmission Lines - The North Anna switchyard has experienced 4 transmission line lockouts due to equipment failure in the past 20 years. These lockouts resulted from failure of transmission line components (4 events). The total duration of these line outages was 76 hours and 16 minutes (excluding two of the lockouts that did not have durations recorded). None of these events resulted in lockout of more than a single transmission line.

Transformers - The North Anna switchyard has experienced 3 transformer lockouts due to equipment failure in the past 20 years. These lockouts resulted from failure of substation components (1 event), and failure of protective devices (2 events). The duration of these equipment outages was not recorded. None of these events resulted in the lockout of more than a single transformer.

Circuit Breakers - The North Anna switchyard has experienced 16 circuit breaker lockouts due to equipment failure in the past 20 years. These lockouts resulted from failure of substation components (15 events) and failure of protective devices (1 event). The duration of these equipment outages was not recorded. None of these events resulted in the lockout of more than one breaker. The North Anna switchyard breaker and a half bus configuration is highly reliable and allows for a circuit breaker lockout without adversely impacting the ability of the switchyard to perform its function.

In summary, the switchyard has experienced relatively few equipment lockouts due to equipment failure and the equipment lockouts have been limited to individual pieces of equipment. The North Anna switchyard and local transmission system have not experienced a complete loss of power in the past 20 years.

Proposed COLA Revision

None.

ENCLOSURE 13

Response to NRC RAI Letter 009

RAI Question 8.02-13

NRC RAI 8.02-13

FSAR Section 8.2.2.1 states that "Upon approaching or exceeding a limit, these procedures verify availability of required and contingency equipment and materials, direct notifications to outside agencies and address unit technical specifications (TS) actions until the normal voltage schedule can be maintained." Since the FSAR does not identify TS for the offsite power system, please clarify the reference to TS in this Section 8.2.2.1 statement.

Dominion Response

The operating procedures for controlling the normal voltage schedule for existing Units 1 and 2 reference the associated Units 1 and 2 Technical Specifications (TS) for the offsite power system. Unit 3 will implement similar operating procedures to maintain the switchyard voltage schedule and address challenges to the maximum and minimum limits. However, the Unit 3 procedures will not reference any TS for offsite power, because they are not required. Therefore, Dominion will revise the FSAR Section 8.2.2.1 discussion of the operating procedures to delete the reference to the TS.

Proposed COLA Revision

FSAR Section 8.2.2.1 will be revised to remove the reference to unit technical specification actions as indicated in the attached markup.

Markup of North Anna COLA

The attached markup represents Dominion's good faith effort to show how the COLA will be revised in a future COLA submittal in response to the subject RAI. However, the same COLA content may be impacted by revisions to the ESBWR DCD, responses to other COLA RAIs, other COLA changes, plant design changes, editorial or typographical corrections, etc. As a result, the final COLA content that appears in a future submittal may be somewhat different than as presented herein.

- Biennial circuit breaker profile or timing tests
- Biennial 500 kV relay testing
- Triennial 230 kV relay testing
- 4-year dissolved gas analysis on transformer load tap changers
- 5-year battery discharge testing
- 8-year PT testing
- 8-year ground grid testing
- 10-year CCVT testing
- 10-year arrester testing
- 10-year wave trap testing

Switchyard protection system monitoring, maintenance, and testing are performed in accordance with North American Electric Reliability Corporation (NERC) Standard PRC-005-1, "Transmission and Generation Protection System Maintenance and Testing," Standard PRC-008-0, "Underfrequency Load Shedding Equipment Maintenance Program," and Standard PRC-017-0, "Special Protection System Maintenance and Testing."

8.2.2.1 Reliability and Stability Analysis

Replace this section with the following.

~~NAPS COL 8.2.4-5-A~~
NAPS COL 8.2.4-9-A

A system impact study analyzed load flow, transient stability and fault analysis for the addition of Unit 3. (Reference 8.2.201) The study was prepared using 2011 summer light-load and 2014 summer base-case projections.

The analysis was performed using Power Technology International Software PSS/E. The analysis examined conditions involving loss of the largest generating unit, loss of the most critical transmission line, and multiple facility contingencies. The study also examined import/export power flows between transmission system utilities.

NAPS COL 8.2.4-10A

The equipment considered is from the point of interconnection of Unit 3 to the switchyard out to the 500 kV transmission system. This included the 230 kV buses and interconnections. The 34.5 kV portion of the North Anna switchyard is not considered. Maximum and minimum switchyard voltage limits have been established for the 500 kV switchyard at 534 kV and 505 kV, respectively. Normal operating and abnormal procedures

exist to maintain the switchyard voltage schedule and address challenges to the maximum and minimum limits. Upon approaching or exceeding a limit, these procedures verify ~~available~~ availability of required and contingency equipment and materials, and direct notifications to outside agencies, ~~and address unit Technical Specifications actions~~ until the normal voltage schedule can be maintained. Dominion has established a Switchyard Interface Agreement and protocols for Maintenance, Communications, Switchyard Control, and System Analysis sufficient to safely operate and maintain the power station interconnection to the transmission system.

The TSO provides analysis capabilities for both Long Term Planning and Real Time Operations. System conditions are evaluated to ensure a bounding analysis and model parameters are selected that are influential in determining the system's ability to provide offsite power adequacy. Elements included in the analysis are system load forecasts (including sufficient margin to ensure a bounding analysis over the life of the study), system generator dispatch (including outages of generators known to be particularly influential in offsite power adequacy of affected nuclear units), outage schedules for transmission elements that have significant influence on offsite power adequacy, cross-system power transfers and power imports/exports, and system modification plans and schedules. A Real Time State Estimator is used to assist in the evaluation of actual system conditions. These capabilities are described in the System Analysis Protocol of the Switchyard Interface Agreement.

The study concluded that with the additional generating capacity of Unit 3, the transmission system remains stable under the analyzed conditions, preserving the grid connection and supporting the normal and shutdown power requirements of Unit 3.

The reliability of the overall system design is indicated by the fact that there have been no widespread system interruptions. Failure rates of individual facilities are low. Transmission lines are designed to have less than one lightning flashover per 100 miles per year, and the record shows much better performance, indicating conservative designs. Most lightning-caused outages are momentary, with few instances of line damage. Other facilities do fail occasionally, but these are random occurrences, and experience has shown that equipment specifications are adequate.

ENCLOSURE 14

Response to NRC RAI Letter 009

RAI Question 8.02-14

NRC RAI 8.02-14

FSAR Section 8.2.2.1 states that the system impact study was prepared using 2011 summer light-load and 2014 summer base-case projections. Please provide the basis for using 2011 summer light-load and 2014 summer base-case projections rather than the summer heavy-load projections and clarify whether the summer loads bound winter peak loads.

Dominion Response

The System Impact Study (SIS) consisted of a loadflow analysis, an import/export study, and a stability study. The SIS was conducted by the Regional Transmission Organization (RTO) to evaluate the addition of Unit 3 to the North Anna switchyard.

The loadflow analysis and import/export study portion of the SIS was conducted based on data projected for the timeframe corresponding to Dominion's requested interconnection date of April 2014. The 2014 summer base case was used because it is considered to be the peak load for the transmission system affected and envelopes the peak winter load. The 2014 summer base case also includes proposed load additions and projects evaluated by the RTO ahead of North Anna Unit 3.

The stability study portion of the SIS requires the use of a lighter load to identify any problems with angular stability of the system. Dominion submitted the stability study request to the RTO in 2006. The RTO uses a 5 year horizon for their studies; therefore, the 2011 summer case was selected for the stability study. After 2011, the RTO will perform annual baseline analyses to update the Regional Transmission Expansion Plan and identify potential reliability problems.

Proposed COLA Revision

None.

ENCLOSURE 15

Response to NRC RAI Letter 009

RAI Question 8.02-15

NRC RAI 8.02-15

Staff review of FSAR Section 8.2.2.1 indicates this section does not address the grid frequency variation. Please identify the maximum and minimum grid frequency. In addition, please discuss how the auxiliary power system studies consider the combined effect of frequency and voltage variation on the operation of safety-related loads (safety-related battery chargers and safety-related UPS) and other running motor loads.

Dominion Response

Dominion is a member of PJM and is subject to the operational requirements of PJM Manual 14D, "Generator Operational Requirements." As stated on page 43 of Manual 14D, Rev. 13, PJM expects generation to be delivered to the transmission system at 60 Hz. Manual 14D also provides the following guidance for generator capability when interconnected with the transmission system:

> Generators and their protective systems (relaying, V/Hz, etc.), larger than 20 MW, must be capable of operating at a frequency of 57.5 Hz for 5 seconds or longer, or 58.0 Hz for 30 seconds or longer, to coordinate with system preservation under-frequency load shedding. Additionally, generators and their protective systems must be capable of operation at overfrequency up to 62 Hz for a limited duration.

Thus, the potential maximum and minimum grid frequency can be 62 Hz to 57.5 Hz, with time restrictions as stated.

The plant auxiliary power system is designed by GEH. The determination of the combined effect of frequency and voltage variations on safety related loads and other motor loads are considered in the auxiliary power system studies conducted by GEH.

Proposed COLA Revision

None.

ENCLOSURE 16

Response to NRC RAI Letter 009

RAI Question 8.02-16

NRC RAI 08.02-16

FSAR Chapter 1, Table 1.9-201, "Conformance with Standard Review Plan" for SRP Section 8.2, indicates GDC-5 is not applicable. DCD, Rev. 4, Section 8.2.2.2 states that the ESBWR Reference Plant is designed as a single-unit plant and, therefore, GDC-5 is not applicable. However, the staff notes that the North Anna Unit 3 switchyard is shared with Units 1 & 2 and, therefore, GDC-5 would be applicable. Please clarify the applicability of, and conformance with, GDC-5.

Dominion Response

GDC 5, "Sharing of structures, systems, and components," applies to structures, systems, and components (SSCs) that are important to safety. It prohibits sharing SSCs that are important to safety at a multi-unit site unless it can be shown that such sharing does not impair the shared SSCs' ability to perform their safety functions.

The North Anna switchyard is not important to safety for Unit 3, and thus, GDC 5 is not applicable. Unit 3 is an ESBWR, which is a passive design, and as such, it does not rely on offsite power to perform any safety-related function, or to support safety-related functions. No credit is taken for the switchyard in the safety analyses for any design basis accidents.

DCD Section 8.2.1.2, "Offsite Power System," states, "The offsite power system is a nonsafety-related system." Also, DCD Section 19A.4.4.4, "At-Power Loss of Preferred Power," states that the components that prevent a loss of offsite power, such as substations, breakers, and protective relays, are not risk significant and do not warrant additional regulatory oversight.

Therefore, the applicability statement for GDC 5 in FSAR Table 1.9-201 is correct as written.

Proposed COLA Revision

None.

ENCLOSURE 17

Response to NRC RAI Letter 009

RAI Question 8.02-17

NRC RAI 08.02-17

FSAR Chapter 1, Table 1.9-201, "Conformance with Standard Review Plan" for SRP Section 8.2, indicates GDC-4 is not applicable. However, RG-1.206 (C.I.8.2.1) states that the FSAR should address conformance with GDC-4. Please provide a discussion to clarify conformance with GDC-4 or the basis for not conforming with GDC-4.

Dominion Response

SRP Section 8.2 addresses offsite power, including the North Anna switchyard. GDC 4, "Environmental and dynamic effects design bases," applies to structures, systems, and components (SSCs) that are important to safety. It requires that these SSCs be designed to accommodate the effects of, and to be compatible with, the environmental conditions associated with normal operation, maintenance, testing, and postulated accidents, including loss-of-coolant accidents.

The North Anna switchyard is not important to safety for Unit 3, and thus, GDC 4 is not applicable. Unit 3 is an ESBWR, which is a passive design, and as such, it does not rely on offsite power to perform any safety-related function, or to support safety-related functions. No credit is taken for the switchyard in the safety analyses for any design basis accidents.

DCD Section 8.2.1.2, "Offsite Power System," states, "The offsite power system is a nonsafety-related system." Also, DCD Section 19A.4.4.4, "At-Power Loss of Preferred Power," states that the components that prevent a loss of offsite power, such as substations, breakers, and protective relays, are not risk significant and do not warrant additional regulatory oversight.

Therefore, the applicability statement for GDC 4 in FSAR Table 1.9-201 is correct as written.

Proposed COLA Revision

None.

ENCLOSURE 18

Response to NRC RAI Letter 009

RAI Question 8.02-18

NRC RAI 08.02-18

FSAR Chapter 1, Table 1.9-201, "Conformance with Standard Review Plan" for SRP Section 8.2 indicates that North Anna Unit 3 conforms with GDC-2. However, staff review of Chapter 8 identified no discussion regarding GDC-2. Please clarify conformance with GDC-2.

Dominion Response

FSAR Table 1.9-201 incorrectly states that the North Anna Unit 3 offsite power system conforms with GDC 2. DCD Table 8.1-1, Revision 4, correctly indicates that GDC 2 is only applicable to the ESBWR DC (Onsite) Power System.

In particular, GDC 2, "Design bases for protection against natural phenomena," states:

> Structures, systems, and components important to safety shall be designed to withstand the effects of natural phenomena such as earthquakes, tornadoes, hurricanes, floods, tsunami, and seiches without loss of capability to perform their safety functions. The design bases for these structures, systems, and components shall reflect: (1) Appropriate consideration of the most severe of the natural phenomena that have been historically reported for the site and surrounding area, with sufficient margin for the limited accuracy, quantity, and period of time in which the historical data have been accumulated, (2) appropriate combinations of the effects of normal and accident conditions with the effects of the natural phenomena and (3) the importance of the safety functions to be performed.

Unit 3 is an ESBWR, which is a passive design and, as such, does not rely on offsite power and thus, no credit is taken for offsite power in the event of a design basis accident. Also, the offsite power system is not a safety-related structure, system or component for Unit 3. Therefore, GDC 2 is not applicable to the Unit 3 offsite power system.

Proposed COLA Revision

FSAR Table 1.9-201 will be revised as indicated in the attached markup.

Markup of North Anna COLA

The attached markup represents Dominion's good faith effort to show how the COLA will be revised in a future COLA submittal in response to the subject RAI. However, the same COLA content may be impacted by revisions to the ESBWR DCD, responses to other COLA RAIs, other COLA changes, plant design changes, editorial or typographical corrections, etc. As a result, the final COLA content that appears in a future submittal may be somewhat different than as presented herein.

NAPS COL 1.9-3-A

Table 1.9-201 Conformance with Standard Review Plan

SRP Section	Title	Rev	Date	Specific Acceptance Criteria	Evaluation
BTP 7-19	Guidance for Evaluation of Diversity and Defense-in-Depth in Digital Computer-Based Instrumentation and Control Systems	Rev. 5	Mar-07		Conforms
HCIB-20	Not Used				Not used
BTP 7-21	Guidance on Digital Computer Real-Time Performance	Rev. 5	Mar-07		Conforms
8.1	Electric Power - Introduction	Rev. 3	Mar-07		Conforms
8.2	Offsite Power System	Rev. 4	Mar-07	~~II.1,~~ II.4, II.5, II.6, II.8	Conforms
				II.1, II.2, II.3, II.7	Not applicable. ESBWR is a passive design and does not rely on offsite power.
8.3.1	A-C Power Systems (Onsite)	Rev. 3	Mar-07	II.1, II.2, II.3, II.4.A through II.4.H, II.4.J, II.5, II.6, II.7, II.10	Conforms
				II.4.I	Not applicable. The ESBWR diesel generators are not safety-related.
				II.8	Not applicable. The ESBWR diesel generators are not safety-related, nor is AC power needed to achieve safe shutdown.
				II.9	Conforms. Addressed in DCD Section 17.4 and in Section 17.6.

ENCLOSURE 19

Response to NRC RAI Letter 009

RAI Question 8.02-19

NRC RAI 08.02-19

FSAR Chapter 1, Table 1.9-201, "Conformance with Standard Review Plan" for SRP Section 8.2 indicates that North Anna Unit 3 complies with the requirements of 10 CFR 50.65(a)(4). However, the staff review of Chapter 8 identified no discussion regarding 10 CFR 50.65. Please clarify compliance with the requirements of 10 CFR 50.65(a)(4).

Dominion Response

As indicated in FSAR Table 1.9-201, North Anna Unit 3 complies with the requirements of 10 CFR 50.65(a)(4). In particular, the subject regulation is one aspect of the "Maintenance Rule" (10 CFR 50.65), an operational program, the implementation of which is addressed by Item 17 in FSAR Table 13.4-201 and the content of which is discussed in FSAR Section 17.6. As indicated by the entries for RG 1.206, Section C.III.1, Section 17.6, in FSAR Table 1.9-203, North Anna Unit 3 conforms with the requirements of 10 CFR 50.65(a)(4).

Proposed COLA Revision

None.

ENCLOSURE 20

Response to NRC RAI Letter 009

RAI Question 8.02-20

NRC RAI 08.02-20

FSAR Chapter 1, Table 1.9-201, "Conformance with Standard Review Plan" for SRP Section BTP 8-3, indicates that BTP-8-3, "Stability of Offsite Power System," is not applicable. However, DCD, Rev 4, Section 8.2.4, "COL Information," identifies that the COL applicant will address the stability and reliability of the offsite transmission system. Please revise Table 1.9-201 to indicate applicability of BTP 8-3 or justify that BTP 8-3 is not applicable.

Dominion Response

The stability and reliability of the offsite power transmission system is discussed in FSAR Section 8.2.2.1. Therefore, the entry for BTP 8-3 in FSAR Table 1.9-201 will be revised to state:

> Conforms – Stability studies investigating the loss of off-site generation were performed.

Proposed COLA Revision

FSAR Table 1.9-201 will be revised as shown in the attached markup.

Markup of North Anna COLA

The attached markup represents Dominion's good faith effort to show how the COLA will be revised in a future COLA submittal in response to the subject RAI. However, the same COLA content may be impacted by revisions to the ESBWR DCD, responses to other COLA RAIs, other COLA changes, plant design changes, editorial or typographical corrections, etc. As a result, the final COLA content that appears in a future submittal may be somewhat different than as presented herein.

NAPS COL 1.9-3-A

Table 1.9-201 Conformance with Standard Review Plan

SRP Section	Title	Rev	Date	Specific Acceptance Criteria	Evaluation
8.4	Station Blackout	Initial Issuance	Mar-07	II.1, II.2	Conforms. Addressed in DCD Section 15.5.5.
				II.3	Not applicable. Onsite Class 1E Emergency AC power sources are not required for ESBWR safe shutdown.
				II.4, II.5	Conforms. Addressed in Section 17.6.
Appendix 8-A	General Agenda, Station Site Visits	Rev. 1	Mar-07		Not applicable. Provides guidance to NRC to conduct site visits.
BTP 8-1	Requirements on Motor-Operated Valves in the ECCS Accumulator Lines	Rev. 3	Mar-07		Not applicable. The ESBWR does not have any safety-related motor-operated valves.
BTP 8-2	Use of Diesel-Generator Sets for Peaking	Rev. 3	Mar-07		Not applicable. The ESBWR will not use the non-safety related diesel generators as peaking units.
BTP 8-3	Stability of Offsite Power Systems	Rev. 3	Mar-07		~~Not applicable. The ESBWR onsite and offsite AC power sources are non-safety related and are not relied upon to mitigate an accident.~~ Conforms. Stability studies were performed to investigate the loss of off-site generation.
BTP 8-4	Application of the Single Failure Criterion to Manually Controlled Electrically Operated Valves	Rev. 3	Mar-07		Not applicable. The ESBWR does not use any manually-operated valves to mitigate an accident.

ENCLOSURE 21

Response to NRC RAI Letter 009

RAI Question 8.02-21

NRC RAI 08.02-21

FSAR Chapter 1, Table 1.9-201, "Conformance with Standard Review Plan" for SRP Section BTP 8-5, indicates that BTP 8-5, "Supplemental Guidance for Bypass and Inoperable Status Indication for Engineered Safety Features System" is not applicable. However, DCD, Rev. 4, Section 8.3.2.2.2 indicates that BTP ICSB 21, "Supplemental Guidance for Bypass and Inoperable Status Indication for Engineered Safety Features System," is applicable. Note that the NRC has updated BTP ICSB 21 as BTP 8-5. Please revise Table 1.9-201 to indicate BTP 8-5 is applicable.

Dominion Response

BTP 8-5 is not applicable to North Anna Unit 3. The ESBWR is designed in accordance with ICSB 21, which is the predecessor to BTP 8-5, as indicated in DCD Table 8.1-1 and Section 8.3.2.2.2. Additionally, BTP 8-5 does not provide guidance on any site-specific design, operational aspects of the facility, or siting information in the FSAR that supplements the Site Safety Analysis Report. Therefore, FSAR Table 1.9-201 will be revised to clarify the basis for concluding that BTP 8-5 is not applicable.

Proposed COLA Revision

FSAR Table 1.9-201 will be revised as shown in the attached markup.

Markup of North Anna COLA

The attached markup represents Dominion's good faith effort to show how the COLA will be revised in a future COLA submittal in response to the subject RAI. However, the same COLA content may be impacted by revisions to the ESBWR DCD, responses to other COLA RAIs, other COLA changes, plant design changes, editorial or typographical corrections, etc. As a result, the final COLA content that appears in a future submittal may be somewhat different than as presented herein.

NAPS COL 1.9-3-A

Table 1.9-201 Conformance with Standard Review Plan

SRP Section	Title	Rev	Date	Specific Acceptance Criteria	Evaluation
BTP 8-2	Use of Diesel-Generator Sets for Peaking	Rev. 3	Mar-07		Not applicable. The ESBWR will not use the non-safety related diesel generators as peaking units.
BTP 8-3	Stability of Offsite Power Systems	Rev. 3	Mar-07		~~Not applicable. The ESBWR onsite and offsite AC power sources are non-safety related and are not relied upon to mitigate an accident.~~ Conforms. Stability studies were performed to investigate the loss of off-site generation.
BTP 8-4	Application of the Single Failure Criterion to Manually Controlled Electrically Operated Valves	Rev. 3	Mar-07		Not applicable. The ESBWR does not use any manually-operated valves to mitigate an accident.
BTP 8-5	Supplemental Guidance for Bypass and Inoperable Status Indication for Engineered Safety Features Systems	Rev. 3	Mar-07		Not applicable. The ESBWR ~~does not rely on safety-related AC power systems. However,~~ is designed in accordance with ICSB 21, the predecessor to BTP 8-5, as stated in DCD Table 8.1-1 and DCD Section 8.3.2.2.2. Also, refer to DCD Table 7.1-1 for conformance to RG 1.47 and BISI for all safety-related systems.

ENCLOSURE 22

Response to NRC RAI Letter No. 009

RAI Question 8.02-22

NRC RAI 08.02-22

FSAR Chapter 1, Table 1.9-201, "Conformance with Standard Review Plan" for SRP Section BTP 8-3, indicates that BTP 8-6, "Adequacy of station Electric Distribution System Voltage" is not applicable. However, DCD, Rev. 4, Section 8.3.1.1.2 indicates that BTP PSB 1, "Adequacy of Station Electric distribution System Voltage," is applicable. Note that the NRC has updated BTP PSB 1 as BTP 8-6. Please revise Table 1.9-201 to indicate BTP 8-6 is applicable.

Dominion Response

BTP 8-6 is not applicable to North Anna Unit 3. The ESBWR is designed in accordance with PSB 1, which is the predecessor to BTP 8-6, as indicated in DCD Table 8.1-1 and Section 8.3.1.1.2. Additionally, BTP 8-6 does not provide guidance on any site-specific design, operational aspects of the facility, or siting information in the FSAR that supplements the Site Safety Analysis Report. Therefore, FSAR Table 1.9-201 will be revised to clarify the basis for concluding that BTP 8-6 is not applicable.

Proposed COLA Revision

FSAR Table 1.9-201 will be revised as shown in the attached markup.

Markup of North Anna COLA

The attached markup represents Dominion's good faith effort to show how the COLA will be revised in a future COLA submittal in response to the subject RAI. However, the same COLA content may be impacted by revisions to the ESBWR DCD, responses to other COLA RAIs, other COLA changes, plant design changes, editorial or typographical corrections, etc. As a result, the final COLA content that appears in a future submittal may be somewhat different than as presented herein.

NAPS COL 1.9-3-A

Table 1.9-201 Conformance with Standard Review Plan

SRP Section	Title	Rev	Date	Specific Acceptance Criteria	Evaluation
BTP 8-6	Adequacy of Station Electric Distribution System Voltages	Rev. 3	Mar-07		Not applicable. The ESBWR ~~does not rely on safety-related onsite AC power sources~~ is designed in accordance with PSB 1, the predecessor to BTP 8-6, as stated in DCD Table 8.1-1 and DCD Section 8.3.1.1.2.
BTP 8-7	Criteria for Alarms and Indications Associated with Diesel-Generator Unit Bypassed and Inoperable Status	Rev. 3	Mar-07		Not applicable. The ESBWR does not use safety-related diesel generators.
9.1.1	Criticality Safety of Fresh and Spent Fuel Storage and Handling	Rev. 3	Mar-07	II.1	Conforms
9.1.2	New and Spent Fuel Storage	Rev. 4	Mar-07	II.1, II.2, II.3, II.4, II.5, II.6, II.7, II.8, II.9	Conforms
9.1.3	Spent Fuel Pool Cooling and Cleanup System	Rev. 2	Mar-07	II.1, II.2, II.3, II.4, II.5, II.6, II.7	Conforms
				II.8	Conforms. EP-ITAAC are addressed in COLA Part 10.
9.1.4	Light Load Handling System (Related to Refueling)	Rev. 3	Mar-07	II.1, II.2, II.3, II.4	Conforms
9.1.5	Overhead Heavy Load Handling Systems	Rev. 1	Mar-07	II.1, II.2, II.3, II.4	Conforms
9.2.1	Station Service Water System	Rev. 5	Mar-07	II.1, II.2, II.3, II.4, II.5, II.6	Conforms

ENCLOSURE 23

Response to NRC RAI Letter 009

RAI Question 8.02-23

NRC RAI 8.02-23

DCD, Rev 4, Section 8.2.3 states that a transmission system reliability and stability review of the site-specific configuration to which the plant is connected will be performed to determine the reliability of the offsite power system and verify that it is consistent with the analysis of Chapter 19. Please clarify the manner in which verification of the reliability of the offsite power system to be consistent with the analysis of Chapter 19 is performed.

Dominion Response

The ESBWR PRA used site-specific PRA information from the North Anna site to develop PRA parameters for Loss of Preferred (LOPP) frequency. The following is related text from the NA3 COLA RAI 19.0-2 response which was submitted to the NRC on July 15, 2008:

> 1) Loss of Preferred Power (LOPP) frequency – to determine if the site has unusual off-site power availability problems. The LOPP frequency is divided into plant-centered, switchyard, grid-related, and weather-related initiating events.

To ensure that the ESBWR PRA is a bounding standard design, the site-specific values for these parameters were used to develop the ESBWR PRA standard values. The ESBWR LOPP frequencies are based on NUREG/CR-6890, "Reevaluation of Station Blackout Risk at Nuclear Power Plants Analysis of Loss of Offsite Power Events: 1986-2004." The North Anna LOPP frequencies were compared to the ESBWR frequencies to identify any outliers. The data shows that grid-related losses of power are significantly more frequent than plant-centered, switchyard, or weather-related losses of power. Although there is a variance in the values for the LOPP frequencies, their range is acceptable because the change in CDF by using the highest frequency is less than 1 E-10 per year. The conclusions in DCD Tier 2 Section 19.2.3.1, Risk from Internal Events, remain valid for the minor variances in LOPP frequencies.

In summary, the ESBWR PRA provides a reasonable representation of the parameters and conditions that are specific to the North Anna site.

In addition to review of the existing grid reliability, the impact of adding North Anna Unit 3 is also reviewed to ensure PRA assumptions remain valid. A System Impact Study (SIS) has been prepared by PJM for the proposed Unit 3. The intent of the SIS was to determine system upgrades and associated costs and construction time estimates required to facilitate the addition of the new generating plant to the transmission system. The system upgrades include the direct connection of the generator to the system and any network upgrades necessary to maintain the reliability of the transmission system.

The SIS has identified the required transmission facility upgrades to ensure reliability is not reduced below the required set standards. When the required upgrades are made, the reliability of the offsite power system will be consistent with the analysis of Chapter 19.

Proposed COLA Revision

None.

ENCLOSURE 24

Response to NRC RAI Letter 009

RAI Question 8.02-24

NRC RAI 8.02-24

DCD Section 8.2.3 states that a station ground grid is provided that consists of a ground mat below grade at the switchyard that is connected to the foundation embedded loop grounding system provided for the entire power block and associated buildings. Please provide a description of the station ground grid.

Dominion Response

A description of the station ground grid is provided in DCD Section 8, Appendix 8A, Miscellaneous Electrical Systems, Section 8A.1, Station Grounding and Surge Protection. This DCD section includes a system description and analysis of regulatory guidance and applicable codes and standards used in the design.

Proposed COLA Revision

None.

ENCLOSURE 25

Response to NRC RAI Letter 009

RAI Question 8.02-25

NRC RAI 8.02-25

SRP 8.2 (III.1.I) identifies the need to address provisions for surge protection and lightning protection. Staff review of Chapter 8 did not identify that these issues were addressed. Please provide a discussion of the adequacy of surge protection and lightning protection of offsite power system.

Dominion Response

The North Anna switchyard uses surge suppressors on the high and low sides of Transformers 1, 2, 3, 5, and 6. The insulation coordination and surge protective devices are applied in compliance with IEEE 1313.2 2004, "IEEE Guide for the Application of Insulation Coordination" and IEEE C62.22 2003, "IEEE Guide for the Application of Metal Oxide Surge Arresters for Alternating Current Systems." The surge protective devices are maintained according to NEMA requirements and manufacturer's recommendations.

A shield wire arrangement is designed for lightning abatement in the switchyard in accordance with IEEE Standard 62.22 2003, "IEEE Guide for the Application of Metal Oxide Surge Arresters for Alternating Current Systems," IEEE Standard 988-2000, "Guide to Direct Lightning Shielding of Substations," and the reference book, "Insulation Coordination for Power Systems," by Andrew R. Hileman.

Proposed COLA Revision

FSAR Section 8.2.1.2.1 will be revised to add a description of the switchyard surge and lightning protection as shown in the attached markup.

Markup of North Anna COLA

The attached markup represents Dominion's good faith effort to show how the COLA will be revised in a future COLA submittal in response to the subject RAI. However, the same COLA content may be impacted by revisions to the ESBWR DCD, responses to other COLA RAIs, other COLA changes, plant design changes, editorial or typographical corrections, etc. As a result, the final COLA content that appears in a future submittal may be somewhat different than as presented herein.

Bus Work	Rated Current at 100°F
500 kV	3891A
230 kV	2750A

8.2.1.2.1 **Switchyard**

Replace the last paragraph with the following.

NAPS COL 8.2.4-2-A
NAPS COL 8.2.4-6-A
NAPS COL 8.2.4-7-A
NAPS COL 8.2.4-8-A

The NAPS switchyard, prior to the point of interconnection with Unit 3, is a 500/230 kV, air-insulated, breaker-and-a-half bus arrangement. Unit 3 is connected to this switchyard by an overhead conductor circuit.

The physical location and electrical interconnection of the switchyard is shown on Figure 8.2-201 and Figure 8.2-202.

Control and relay protection systems are provided. Support systems, such as grounding, raceway, lighting, AC/DC station service, and switchyard lightning protection, are also provided.

The North Anna switchyard uses surge suppressors on the high and low sides of Transformers 1, 2, 3, 5, and 6. The insulation coordination and surge protective devices are applied in compliance with IEEE 1313.2 2004, "IEEE Guide for the Application of Insulation Coordination," and IEEE C62.22 2003, "IEEE Guide for the Application of Metal Oxide Surge Arrester for Alternating Current Systems." The surge protective devices are maintained according to NEMA requirements and manufacturer's recommendations.

A shield wire arrangement is designed for lightning abatement in the switchyard in accordance with IEEE 62.22 2003, "IEEE Guide for the Application of Metal Oxide Surge Arrestors for Alternating Current Systems," IEEE 988-2000, "Guide to Direct Lightning Shielding of Substations," and "Insulation Coordination for Power Systems."

~~**NAPS SUP 8.2-1**~~
NAPS COL 8.2.4-5-A

8.2.1.2.2 **Protective Relaying**

The 500 kV transmission lines are protected with redundant high-speed relay schemes with re-closing and communication equipment to minimize line outages. The 500 kV switchyard buses have redundant bus differential protection using separate and independent current and control circuits. Generating unit tie-lines and auxiliary transformer underground cable circuits are protected with redundant high-speed relay schemes.

ENCLOSURE 26

Response to NRC RAI Letter 009

RAI Question 8.02-26

NRC RAI 8.02-26

SRP 8.2 identifies the need to address grid instability relative to the nuclear unit. Please identify, and provide detailed discussion as applicable, any effects on the operation (e.g., minimum and maximum grid voltage, degraded voltage) of the existing nuclear Units 1 & 2 due to the addition of Unit 3 to the grid.

Dominion Response

The impact of Unit 3 as it relates to grid instability is considered by both the grid operator and by the existing units.

PJM, which is the Regional Transmission Organization responsible for grid stability, performed a system impact study (SIS) to evaluate the impact that the interconnection of Unit 3 would have on import/export capability, short circuit capability, and system stability. The SIS determined that system upgrades will be required prior to interconnecting Unit 3 to the grid to ensure that the transmission system will meet PJM's and Dominion's minimum standards. The SIS is discussed in FSAR Section 8.2.2.1.

Under the existing units' operating licenses (NPF-4 and -7) and applicable NRC regulations, the potential impact of Unit 3 on the existing units will be evaluated under the existing units administrative controls. Changes that could impact the existing units' licensing basis will be evaluated in accordance with 10 CFR 50.59. Changes would be reported to NRC in accordance with 10 CFR 50.71(e).

Proposed COLA Revision

None.

Dominion Resources Services, Inc.
5000 Dominion Boulevard, Glen Allen, VA 23060
Web Address: www.dom.com

Dominion®

November 19, 2008

U. S. Nuclear Regulatory Commission
Attention: Document Control Desk
Washington, D. C. 20555

Serial No. NA3-08-085RA
Docket No. 52-017
COL/BCB

DOMINION VIRGINIA POWER
NORTH ANNA UNIT 3 COMBINED LICENSE APPLICATION
RESPONSE TO REQUEST FOR ADDITIONAL INFORMATION LETTER NO. 016
(FSAR CHAPTER 8)

On July 9, 2008, the NRC requested additional information to support the review of certain portions of the North Anna Unit 3 Combined License Application (COLA). Dominion responded to the request by letter dated August 21, 2008 (Serial No. NA3-08-085R). In that letter, Dominion deferred its technical response to the following two RAIs:

- RAI 08.02-27 Confirm Switchyard Voltage Limits
- RAI 08.02-28 Capacity and Capability of Offsite Power System

The preliminary response to RAI 08.02-27, Confirm Switchyard Voltage Limits, indicated that discussions with NRC on the subject were ongoing and that a response would be provided in conjunction with an anticipated follow-up response to a related RAI, 14.02-1. It was subsequently determined that no additional response to RAI 14.02-1 was required. Thus, the response to RAI 08.02-27 is provided in Enclosure 1 of this letter.

The preliminary response to RAI Question 08.02-28, Capacity and Capability of Offsite Power System, indicated that a response would be provided following the submittal of GEH's response to DCD RAI 14.3-394 to ensure consistency and completeness. The DCD RAI response was submitted in GEH letter dated August 27, 2008 (MFN 08-086 Supplement 67). The response to RAI 08.02-28 is provided in Enclosure 2 of this letter.

Separately, in Dominion's September 26, 2008 letter to NRC, we advised you that our responses to RAI 02.02.03-2, Evaluation of Potential Control Room Accidents, and RAI 02.02.03-3, Evaporation Rate Sensitivity Analysis, required additional time to complete. It is our intent to submit the responses to those two RAIs by December 31, 2008.

Please contact Regina Borsh at (804) 273-2247 (regina.borsh@dom.com) if you have questions.

Very truly yours,

Marvin L. Smith

D089
NRO

COMMONWEALTH OF VIRGINIA

COUNTY OF HENRICO

The foregoing document was acknowledged before me, in and for the County and Commonwealth aforesaid, today by Marvin L. Smith, who is Project Director-COL Project. He has affirmed before me that he is duly authorized to execute and file the foregoing document on behalf of Virginia Electric and Power Company (Dominion Virginia Power), and that the statements in the document are true to the best of his knowledge and belief.

Acknowledged before me this 19th day of November, 2008

My registration number is 7173057 and my

Commission expires: August 31, 2012

Wanda K. Marshall

Notary Public

WANDA K. MARSHALL
Notary Public
Commonwealth of Virginia
7173057
My Commission Expires Aug 31, 2012

Enclosures:

1. Response to NRC RAI Letter No. 016, RAI Question No. 08.02-27
2. Response to NRC RAI Letter No. 016, RAI Question No. 08.02-28

Commitments made by this letter:

None

cc: U. S. Nuclear Regulatory Commission, Region II
T. A. Kevern, NRC
J. T. Reece, NRC
J. J. Debiec, ODEC
G. A. Zinke, NuStart/Entergy
T. L. Williamson, Entergy
R. Kingston, GEH
K. Ainger, Exelon
P. Smith, DTE
J. Burford, Entergy

ENCLOSURE 1

Response to NRC RAI Letter No. 016

RAI Question No. 08.02-27

NRC RAI 08.02-27

FSAR Section 8.2.2.1, Reliability and Stability Analysis, NAPS COL 8.2.4-10A, identified maximum and minimum switchyard voltage limits of 534 kV and 505 kV. Please explain how these limits were established and confirm that these voltage limits are acceptable for auxiliary power system equipment operation including safety-related battery chargers and safety-related uninterruptible power supplies during different operating conditions. The confirmation should include the following (assumptions, acceptance criteria and summary of results): load flow analysis (bus and load terminal voltages of the station auxiliary system), short circuit analysis, equipment sizing studies, protective relay setting and coordination, and motor starting with minimum and maximum grid voltage conditions. A separate set of calculations should be performed for each available connection to offsite power supply. In addition, please discuss how the results of the calculations will be verified.

Dominion Response

The North Anna 500 kV switchyard voltage limits of 534 kV and 505 kV were established for the operation of Units 1 and 2. Since Unit 3 will be interconnecting into the same switchyard, Unit 3 will be operating under the same voltage limits. If the taps on the UATs for the ESBWR are set at +2.5%, then the current North Anna switchyard voltage limits of 534 kV and 505 kV would translate to +4.1%/-1.5%. This voltage variation at the source is less than +/- 5%. Considering that electrical equipment is typically rated for operation at +/- 10% terminal voltage, and considering the ability to adjust taps on unit substation transformers within the ESBWR, it is reasonable to expect that the plant power distribution system can be optimized to supply power within the required voltage range to plant equipment.

The DCD does not presently contain limits for voltage and frequency variation that need to be met by site-specific offsite power systems. Analyses of the as-built onsite power system will be performed to determine the load requirements during design basis operating modes. These analyses will, in part, specify required power, voltage, frequency, and interrupting capability necessary for the offsite power system to support safety-related load operation during design basis operating modes. These analyses will be accomplished as part of a site specific ITAAC and will ensure that each as-built offsite circuit has sufficient capacity and capability. The exact wording of these ITAAC will be finalized and incorporated into the COLA following final development of the GDC 17 interface requirements that will be included in the DCD. These interface requirements are under development by GEH in response to DCD RAI 14.3-394 S1.

Proposed COLA Revision

None.

ENCLOSURE 2

Response to NRC RAI Letter No. 016

RAI Question No. 08.02-28

NRC RAI 08.02-28

Since all North Anna units share the same switchyard, the offsite power system provided for the site should have sufficient capacity and capability to safely shutdown all units. As documented in NRC generic communications (e.g., NRC Generic Letter 2007-01, "Inaccessible or Underground Power Cable Failures that Disable Accident Mitigation Systems or Cause Plant Transients" NRC Information Notice 98-07, "Offsite Power Reliability Challenges from Industry Deregulation," and NRC Information Notice. 95-37, "Inadequate Offsite Power Voltages During Design-Basis Events") operational experience has shown the need to demonstrate that the offsite power system operation supports equipment important to safety and avoids plant transients. In addition, NRC Generic Letter 2006-02, Grid Reliability and the Impact on Plant Risk and the Operability of Offsite Power, states that "For nuclear plants licensed in accordance with the GDC in Appendix A to 10 CFR Part 50, the design criteria for onsite and offsite electrical power systems are provided in GDC 17... which requires, among other things, that an offsite electric power system be provided to permit the functioning of certain SSCs important to safety in the event of anticipated operational occurrences." Please discuss the capacity and capability of the offsite system (i.e., the 500 kV lines and associated switchyard equipment) to mitigate the consequences of anticipated abnormal operational occurrences associated with unit operation.

Dominion Response

The switchyard for the North Anna Power Station was evaluated under a System Impact Study (SIS) for interconnection of Unit 3 by PJM, the Regional Transmission Operator (RTO). The SIS referenced in FSAR Section 8.2.2.1 was performed to verify load flow capability, short circuit capability, and system stability of the local transmission system in the vicinity of the North Anna switchyard. The study was performed in accordance with NERC criteria. Individual cases are run to NERC Categories A, B, and C for No Contingency evaluations, N-1 evaluations, and N-2 evaluations, respectively. This level of detail meets the specific requirements of the RTO and assures that the local transmission system, including the North Anna switchyard, will continue to be a reliable power source. This methodology also meets criteria given by NERC and that referenced in Standard Review Plan 8.2, Section III.F.

Specific upgrades to the transmission system were recommended by the SIS to ensure that PJM interconnection criteria are met with the interconnection of Unit 3. These upgrades are required to be installed prior to interconnecting Unit 3. Upon completion of these system upgrades, the SIS finds that the transmission system is capable of accepting the interconnection of Unit 3 and of operating with the contingencies evaluated. Also, as discussed in Dominion's response to RAI

8.02-12 (Serial No. NA3-08-056R, dated July 28, 2008), the transmission system in the vicinity of the North Anna switchyard has been very reliable during the past 20 years of operation.

Analyses of the as-built onsite power system will be performed to determine the load requirements during design basis operating modes. These analyses will, in part, specify required power, voltage, frequency, and interrupting capability necessary for the offsite power system to support safety-related load operation during design basis operating modes. These analyses will be accomplished as part of a site specific ITAAC and will ensure that each as-built offsite circuit has sufficient capacity and capability. The exact wording of these ITAAC will be finalized and incorporated into the COLA following final development of the GDC 17 interface requirements that will be included in the DCD. These interface requirements are under development by GEH in response to DCD RAI 14.3-394 S1.

Proposed COLA Revision

None.

Eugene S. Grecheck
Vice President
Nuclear Development

Dominion Energy, Inc. • Dominion Generation
Innsbrook Technical Center
5000 Dominion Boulevard, Glen Allen, VA 23060
Phone: 804-273-2442, Fax: 804-273-3903
E-mail: Eugene.Grecheck@dom.com

Dominion®

December 1, 2008

U. S. Nuclear Regulatory Commission
Attention: Document Control Desk
Washington, D. C. 20555

Serial No. NA3-08-121R
Docket No. 52-017
COL/MWH

DOMINION VIRGINIA POWER
NORTH ANNA UNIT 3 COMBINED LICENSE APPLICATION
RESPONSE TO REQUEST FOR ADDITIONAL INFORMATION LETTER 029 (FSAR CHAPTERS 8 AND 16)

On October 16, 2008, the NRC requested additional information to support the review of certain portions of the North Anna Unit 3 Combined License Application (COLA). The response to the following RAIs is provided in Enclosures 1 through 7:

- RAI Question 08.02-29 — Underground Cable Testing
- RAI Question 08.02-30 — Identify Switchyard Transformers
- RAI Question 08.02-31 — Switchyard Stability Analysis
- RAI Question 08.02-32 — 34.5 kV Loads Impact on Grid Stability
- RAI Question 08.02-36 — 10 CFR 50.65a)(4) Applicability to Switchyard
- RAI Question 08.02-37 — Site Grounding System
- RAI Question 16-1 — Technical Specifications Site-Specific information

This information will be incorporated into a future submission of the North Anna Unit 3 COLA, as described in the Enclosures.

Responses to supplemental RAIs 08.02-33, -34, and -35, included in the October 16, 2008 NRC letter, are not provided at this time. Dominion had previously responded to the same issues regarding the applicability of GDC 2, 4, and 5 to offsite power in our July 28, 2008 letter (responses to RAIs 08.02-16, -17, and -18, respectively). Because our responses to the supplemental RAIs would essentially be a re-statement of our previous positions, Dominion instead requests a meeting with the appropriate NRC staff to discuss the RAIs in more detail. We will contact the NRC North Anna COLA Project Manager to schedule a meeting.

D089
NRO

Please contact Regina Borsh at (804) 273-2247 (regina.borsh@dom.com) if you have questions.

Very truly yours,

Eugene S. Grecheck

COMMONWEALTH OF VIRGINIA

COUNTY OF HENRICO

The foregoing document was acknowledged before me, in and for the County and Commonwealth aforesaid, today by Eugene S. Grecheck, who is Vice President-Nuclear Development of Virginia Electric and Power Company (Dominion Virginia Power). He has affirmed before me that he is duly authorized to execute and file the foregoing document on behalf of the Company, and that the statements in the document are true to the best of his knowledge and belief.

Acknowledged before me this 1st day of December, 2008
My registration number is 7173057 and my
Commission expires: August 31, 2012

Wanda K. Marshall
Notary Public

WANDA K. MARSHALL
Notary Public
Commonwealth of Virginia
7173057
My Commission Expires Aug 31, 2012

Enclosures:

1. Response to RAI Letter Number 029, RAI Question 08.02-29
2. Response to RAI Letter Number 029, RAI Question 08.02-30
3. Response to RAI Letter Number 029, RAI Question 08.02-31
4. Response to RAI Letter Number 029, RAI Question 08.02-32
5. Response to RAI Letter Number 029, RAI Question 08.02-36
6. Response to RAI Letter Number 029, RAI Question 08.02-37
7. Response to RAI Letter Number 029, RAI Question 16-1

Commitments made by this letter:

1. The information provided in the RAI responses will be incorporated into a future submission of the North Anna Unit 3 COLA, as described in the Enclosures.

cc: U. S. Nuclear Regulatory Commission, Region II
T. A. Kevern, NRC
J. T. Reece, NRC
J. J. Debiec, ODEC
G. A. Zinke, NuStart/Entergy
T. L. Williamson, Entergy
R. Kingston, GEH
K. Ainger, Exelon
P. Smith, DTE

ENCLOSURE 1

Response to NRC RAI Letter 029

RAI Question 08.02-29

NRC RAI 08.02-29

In response to RAI 8.2-4, the applicant, on July 28, 2008, stated that the normal preferred power supply and alternate preferred power supply both use 230 kV cable. In addition, the applicant stated that periodic monitoring of cable insulation for underground medium and high voltage cable will be conducted to detect potential cable degradation from moisture intrusion using one of the following methods or an equivalent: partial discharge testing, time domain reflectometry, dissipation factor testing, or very low frequency ac testing. The staff needs the applicant to provide technical justification of using one of the testing methods indicated above will be adequate to detect potential high voltage (230 kV) cable degradation.

In addition, the staff finds that the applicant did not address the testing frequency. The staff also finds that the testing specified alone is not sufficient. The staff believes that testing of cables and inspection of manholes for water accumulation are required in order to avoid cable degradation. The manholes should be inspected every six months for water accumulation and adequate corrective actions (increase frequency) should be taken if water accumulation is found. The staff requests that the applicant address the above concerns.

Dominion Response

In our response to RAI 8.2-4, Dominion committed to conduct periodic monitoring of cable insulation for underground medium and high voltage cable to detect potential cable degradation from moisture intrusion using one of several methods listed or an equivalent. Because of the difficulty interpreting the data from such diagnostic tests and estimating the risk of future cable failure, the intent was to commit to cable monitoring but allow for improvements in technology before selecting the exact method.

Dominion has further reviewed the available methods for periodic testing of underground cable and the types of cable available for underground application and has determined that 230 kV metallic sheathed cable can be specified for use that is designed to prevent moisture ingress into the cable insulation.

Typically, medium voltage (5kV - 35kV) cables utilized on utility distribution systems and in generation facilities do not have metallic sheaths to prevent moisture ingress into the insulation layer. Consequently, older design cables manufactured with different processes and insulating materials have experienced earlier than expected failures from a phenomenon known as "water treeing". Also, moisture can be introduced into the insulation during the curing (cross-linking) process if a steam cure is used, further aggravating the water treeing process and leading to early failure. Dominion specifies a dry cure process for its 230 kV cross-linked polyethylene (XLPE) cable during manufacture.

Specifications for 230kV XLPE cables procured by Dominion require the cables to have a metallic sheath to prevent moisture ingress into the cable insulation. The metallic sheath is machine applied to the cable core and mechanically sealed to form a continuous barrier against moisture. This metallic sheath is moisture impervious and makes such a cable design suitable for installation in wet locations. Typically, metallic sheathed cables do not experience water treeing or failures related to water intrusion

into the cable insulation. FSAR Section 8.2.1.2 will be revised to include the design requirements for this cable.

Because of the continuous barrier formed by the sheath, the only point of entry available to moisture is at splices or terminations where the sheath is disturbed. Splice kits and termination kits for metallic sheathed cable are designed to seal to the metallic sheath at the cable ends and restore the continuous barrier to moisture intrusion. However, there are no splices designed into the underground portion of either the normal preferred power source feeder or the alternate preferred power source feeder, i.e. each is a continuous circuit.

Therefore, because Dominion will use cable with design features that avoid cable insulation degradation from moisture intrusion, no periodic testing will be required.

As a conservative measure to minimize the possibility of exposure of the cable to moisture, manholes associated with the normal preferred power supply and alternate preferred power supply 230 kV cable will be inspected every six months for water accumulation. Under the corrective action program, actions (such as increased inspection frequency) will be taken if excessive water accumulation is found. FSAR Section 8.2.1.2 will be revised to include the requirement for manhole inspections for water accumulation.

Proposed COLA Revision

- FSAR Section 8.2.1.2 will be revised as indicated on the attached markup.

Markup of North Anna COLA

The attached markup represents Dominion's good faith effort to show how the COLA will be revised in a future COLA submittal in response to the subject RAI. However, the same COLA content may be impacted by revisions to the ESBWR DCD, responses to other COLA RAIs, other COLA changes, plant design changes, editorial or typographical corrections, etc. As a result, the final COLA content that appears in a future submittal may be somewhat different than as presented herein.

lines from offsite power sources is shown in Figure 8.2-202. Figure 8.2-203 maps the offsite transmission lines.

The transmission lines and towers connecting the switchyard to the transmission system are as follows:

- Two 500 kV overhead lines to the Ladysmith substation (approximately 15 miles)
- A 500 kV overhead line to the Midlothian substation (approximately 41 miles)
- A 500 kV overhead line to the Morrisville substation (approximately 33 miles)
- A 230 kV overhead line to the Gordonsville substation (approximately 31 miles)

The two Ladysmith lines (one of which was constructed for Units 1 and 2) utilize a common right-of-way. Each of the other lines utilizes separate rights-of-way. The 230 kV Gordonsville line crosses under the 500 kV Ladysmith and Morrisville lines near the switchyard.

Transmission tower separation, line installation, and clearances are consistent with the National Electric Safety Code (NESC) and Dominion transmission line standards. Basic tower structural design parameters, including the number of conductors, height, materials, color, and finish are consistent with Dominion transmission line design standards. Adequate clearance exists between wire galloping ellipses to minimize conductor or structure damage. (Reference 8.2-202)

8.2.1.2 Offsite Power System

Replace the first and second paragraphs with the following.

NAPS COL 8.2.4-3-A
NAPS COL 8.2.4-4-A

The offsite power system is a nonsafety-related system. Power is supplied to the plant from multiple independent and physically separate offsite power sources. The normal preferred power source is any one of the four 500 kV lines, and the alternate preferred power source is any other one of the four 500 kV lines.

The normal preferred power source is supplied to the UATs through the intermediate transformer, MODs and isolation circuit breakers. The normal preferred power interface with the offsite power system occurs at the incoming disconnect switch of the intermediate switchyard. The MOD

feeding a faulted UAT will be opened after the UAT high voltage breaker opens.

Delete the last paragraph and add the following paragraph.

Underground cables connect the normal and alternate preferred power sources to the UATs and RATs, respectively. The underground cables have a metallic sheath to prevent moisture ingress into the cable insulation. The metallic sheath is machine applied to the cable core and mechanically sealed to form a continuous barrier against moisture. To maintain their independence from each other, the underground cables are routed in duct banks and are physically and electrically separate from each other. Manholes associated with these duct banks are inspected every six months for excessive accumulation of water.

Control, instrumentation, and miscellaneous power cables associated with the normal and alternate preferred circuits are routed in duct bank between the power block and the Intermediate Switchyard. Adequate separation is ensured by either routing cables associated with the normal preferred circuit in a separate duct bank from cables associated with the alternate preferred circuit, or by routing these cables in separate conduits within the same duct bank.

~~Periodic monitoring of cable insulation for underground medium and high voltage cable will be conducted to detect potential cable degradation from moisture intrusion using one of the following methods: partial discharge testing, time domain reflectometry, dissipation factor testing, or very low frequency AC testing.~~

8.2.1.2.1 Switchyard

Replace the last paragraph with the following.

NAPS COL 8.2.4-2-A
NAPS COL 8.2.4-6-A
NAPS COL 8.2.4-7-A
NAPS COL 8.2.4-8-A

The NAPS switchyard, prior to the point of interconnection with Unit 3, is a 500/230 kV, air-insulated, breaker-and-a-half bus arrangement. Unit 3 is connected to this switchyard by an overhead conductor circuit.

The physical location and electrical interconnection of the switchyard is shown on Figure 8.2-201 and Figure 8.2-202.

Control and relay protection systems are provided. Support systems, such as grounding, raceway, lighting, AC/DC station service, and switchyard lightning protection, are also provided.

ENCLOSURE 2

Response to NRC RAI Letter 029

RAI Question 08.02-30

NRC RAI 08.02-30

In response to RAI 8.2-6, on July 28, 2008, the applicant stated that transformers 1, 2, 3, 5, and 6 in the North Anna switchyard are protected by sudden pressure relays. Transformers 1 and 2 have solid grounds on their 500 kV, wye connected windings. The 34.5 kV delta connected windings have zig-zag transformers connected on the bus creating a ground source. This ground source is monitored by relays for ground fault detection. Differential relays applied across these transformers also provide ground fault protection. Since the transformers 3, 5, and 6 have no tertiary winding, differential relays provide ground fault protection.

On the basis of its review, the staff finds that the applicant did not identify transformers 1, 2, 3, 5, and 6 in Figure 8.2-201. The staff requests that the applicant revise or supplement figure 8.2-201 accordingly.

Dominion Response

FSAR Figure 8.2-201 will be revised to identify transformers 1, 2, 3, 5, and 6 as shown in the attached FSAR mark-up.

Proposed COLA Revision

- FSAR Figure 8.2-201 will be revised as indicated on the attached markup.

Markup of North Anna COLA

The attached markup represents Dominion's good faith effort to show how the COLA will be revised in a future COLA submittal in response to the subject RAI. However, the same COLA content may be impacted by revisions to the ESBWR DCD, responses to other COLA RAIs, other COLA changes, plant design changes, editorial or typographical corrections, etc. As a result, the final COLA content that appears in a future submittal may be somewhat different than as presented herein.

NAPS COL 8.2.4-1-A Figure 8.2-201 500/230 kV Switchyard Single-Line Diagram

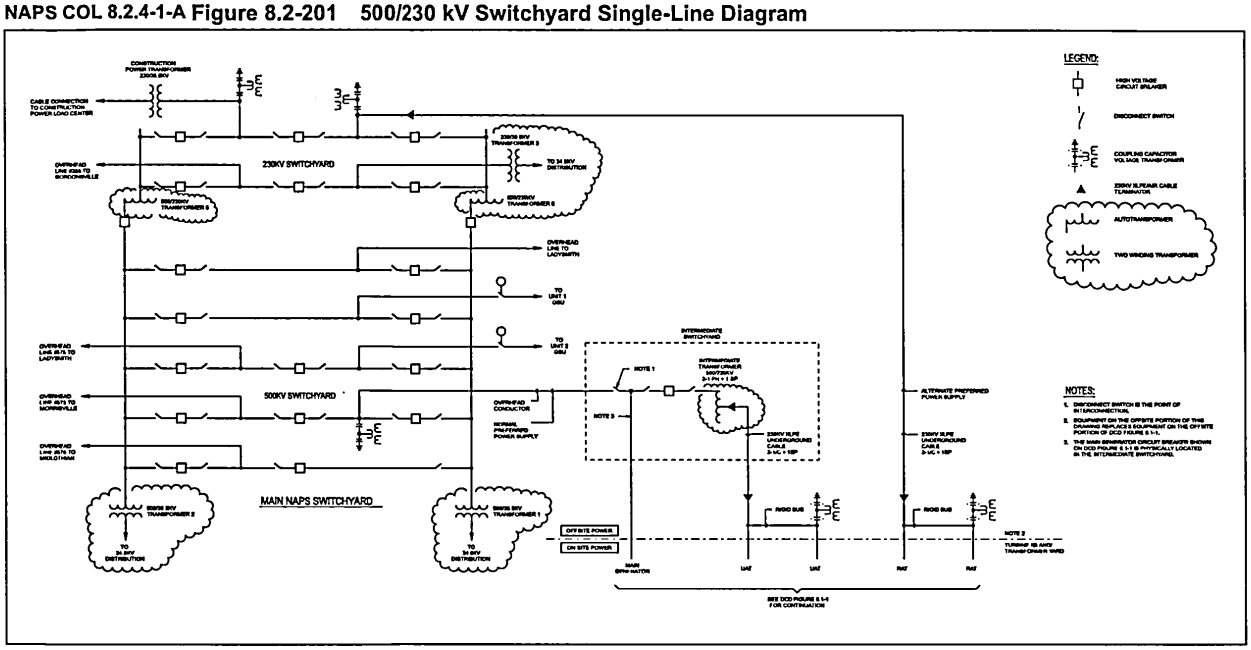

ENCLOSURE 3

Response to NRC RAI Letter 029

RAI Question 08.02-31

NRC RAI 08.02-31

As referenced in SRP section 8.2, operating experience has indicated that Palo Verde Nuclear Generating Station lost offsite power and all three units tripped on June 14, 2004. As a result of this operating experience, the staff requested the applicant to clarify whether the stability analysis for North Anna switchyard included tripping of all three nuclear units.

In RAI 8.2-10 response, you have stated that stability analysis was performed in accordance with NERC Categories A, B, and C for no contingency evaluations, N-1 evaluations and N-2 evaluations. NERC Category D includes a case for loss of all generating units at a single station and is considered an extreme event analysis and exceeds N-2. NERC Category D analyses are not applicable to North Anna.

However, the staff requests that the applicant provide a discussion (including failure mode and effect analysis) why they believe that event similar to Palo Verde will not cause the loss of three units at North Anna Station, or should such an event occur it will not impact grid stability.

Dominion Response

The Palo Verde event discussed in this supplement to RAI 08.02-10 was originally described in NRC Information Notice (IN) 2005-15. According to the IN 2005-15, a fault across a degraded insulator on a 230 kV transmission line initiated a series of events that resulted in the isolation of the Palo Verde Nuclear Generating Station switchyard from the transmission system and shutdown of all three nuclear units. The NRC noted in IN 2005-15 that "The single-failure susceptibility of a transmission line protection system was the primary cause of the cascading blackout." IN 2005-15 also noted that "the tripping scheme lacked redundancy that could have prevented the failure of the protective scheme to clear the fault."

As a result of the review of IN 2005-15 by Dominion for applicability to its nuclear sites, certain modifications to the protection scheme within the 230 kV portion of the North Anna switchyard were implemented. Specifically, the Transformer 5 differential zone of protection was modified to include its associated 230 kV bus, and Transformer 3 high-side leads were provided with redundant protection. These modifications to the North Anna switchyard were completed in October 2007. The modified equipment ensures a proper overlapping protection scheme in the 230 kV switchyard.

The 500 kV portion of the North Anna switchyard and its connecting substations have circuit breakers with dual trip coils and dual control circuits. This is a standard Dominion configuration.

The 230 kV portion of the North Anna switchyard and its connecting substation have circuit breakers with single trip coils and single control circuits. This is a standard Dominion configuration.

The circuit protection scheme at the 230 kV transmission level uses overlapping zones of protection and relies on communications that span the transmission lines from substation to switchyard. Should a fault occur on the 230 kV line at the first remote substation from the North Anna switchyard and the remote substation breaker fails to open, a transfer trip signal will be sent to open the North Anna breaker. This same logic is true for a fault on the 230 kV line near the North Anna switchyard. Also, should a fault occur on the 230 kV line at North Anna that is

not immediately cleared due to breaker failure to operate, trip signals will be generated to open breakers in expanding zones of protection until the fault is cleared. If necessary, the 500 kV breakers will open to isolate the 230 kV portion of the switchyard. At this level, the breakers have dual trip coils and dual control circuits. Since North Anna Units 1 and 2 interconnect at the 500 kV level, and since Unit 3 is proposed to interconnect at the 500 kV level, the generating units are ultimately protected by equipment that uses dual trip coils and dual control circuits, thus limiting the possibility for an event similar to the Palo Verde event.

Proposed COLA Revision

None

ENCLOSURE 4

Response to NRC RAI Letter 029

RAI Question 08.02-32

NRC RAI 08.02-32

In response to RAI 8.2-11, you have stated that the angular stability analysis is performed at the transmission voltage level and would, as such, excludes loads operating at distribution voltage levels of 34.5 kV as they have limited ability to cause angular stability difficulties at the transmission level. However, the staff requests that the applicant quantify the 34.5 kV distribution loads (MW/MVA) in terms of the total load modeled at the 500 kV transmission system. In addition, please explain why you believe the distribution loads have limited ability to affect the grid stability.

Dominion Response

FSAR Section 8.2.2.1 states, regarding the transmission system impact study, that "The equipment considered is from the point of interconnection of Unit 3 to the switchyard out to the 500 kV transmission system. This included the 230 kV buses and interconnections. The 34.5 kV portion of the North Anna switchyard is not considered." The Dominion response to RAI 08.02-11 (letter NA3-08-056R, dated July 28, 2008) states that "The study is performed at the transmission voltage level and would, as such, exclude loads operating at distribution voltage levels of 34.5 kV as they have limited ability to cause angular stability difficulties at the transmission level." These statements identify that the 34.5 kV buses, and loads at the 34.5 kV voltage level, are not individually modeled in the analysis. The load on the 34.5 kV distribution buses are, however, considered in the model used for the system impact study, as discussed below. FSAR Section 8.2.2.1 will be revised to provide clarification that the 34.5 kV loads are included in the transmission system impact study at the 500 kV level.

At normal, full load operation of Units 1 and 2, 29.3 Mw (36 MVA) of load at the 500 kV level can be attributed to the combination of the 34.5 kV buses. The Dominion area load modeled at the 500 kV transmission system for the light load stability case is 10,506 MW, representing 50 % of the summer peak.

In the North Anna switchyard, the 34.5 kV buses are fed from either the 500 kV switchyard or the 230 kV switchyard. Each of the 34.5 kV buses serves plant auxiliary loads associated with Units 1 and 2 only. There is no generation source connected to the 34.5 kV buses. As stated in the Dominion response to RAI 08.02-11, the stability analysis discussed in FSAR Section 8.2.2.1 is an angular stability analysis that verifies stability of the transmission system and, as such, is performed at transmission level voltages. Because of this, the 34.5 kV buses in the North Anna switchyard were not explicitly modeled in the study, but the plant auxiliary loads on each of these buses were included at the 500 kV level. Further, since there is no generation source connected to any of the 34.5 kV buses, there is no need to individually model these buses when determining the angular stability of the transmission system.

Proposed COLA Revision

- FSAR Section 8.2.2.1 will be revised as indicated on the attached markup.

Markup of North Anna COLA

The attached markup represents Dominion's good faith effort to show how the COLA will be revised in a future COLA submittal in response to the subject RAI. However, the same COLA content may be impacted by revisions to the ESBWR DCD, responses to other COLA RAIs, other COLA changes, plant design changes, editorial or typographical corrections, etc. As a result, the final COLA content that appears in a future submittal may be somewhat different than as presented herein.

Routine switchyard testing activities include, but are not necessarily limited to, the following:

- Semiannual dissolved gas analysis on transformers
- Biennial circuit breaker profile or timing tests
- Biennial 500 kV relay testing
- Triennial 230 kV relay testing
- 4-year dissolved gas analysis on transformer load tap changers
- 5-year battery discharge testing
- 8-year PT testing
- 8-year ground grid testing
- 10-year CCVT testing
- 10-year arrester testing
- 10-year wave trap testing

Switchyard protection system monitoring, maintenance, and testing are performed in accordance with North American Electric Reliability Corporation (NERC) Standard PRC-005-1, "Transmission and Generation Protection System Maintenance and Testing," Standard PRC-008-0, "Underfrequency Load Shedding Equipment Maintenance Program," and Standard PRC-017-0, "Special Protection System Maintenance and Testing."

8.2.2.1 Reliability and Stability Analysis

Replace this section with the following.

NAPS COL 8.2.4-9-A
NAPS COL 8.2.4-10A

A system impact study analyzed load flow, transient stability and fault analysis for the addition of Unit 3. (Reference 8.2-201) The study was prepared using 2011 summer light-load and 2014 summer base-case projections.

The analysis was performed using Power Technology International Software PSS/E. The analysis examined conditions involving loss of the largest generating unit, loss of the most critical transmission line, and multiple facility contingencies. The study also examined import/export power flows between transmission system utilities.

NAPS COL 8.2.4-10A

The equipment considered is from the point of interconnection of Unit 3 to the switchyard out to the 500 kV transmission system. This included the

230 kV buses and interconnections. The 34.5 kV portion of the North Anna switchyard is not ~~considered~~ modeled separately, but the 34.5 kV loads are considered at the 500 kV level. Maximum and minimum switchyard voltage limits have been established for the 500 kV switchyard at 534 kV and 505 kV, respectively. Normal operating and abnormal procedures exist to maintain the switchyard voltage schedule and address challenges to the maximum and minimum limits. Upon approaching or exceeding a limit, these procedures verify the availability of required and contingency equipment and materials, and direct notifications to outside agencies, until the normal voltage schedule can be maintained. Dominion has established a Switchyard Interface Agreement and protocols for Maintenance, Communications, Switchyard Control, and System Analysis sufficient to safely operate and maintain the power station interconnection to the transmission system.

The TSO provides analysis capabilities for both Long Term Planning and Real Time Operations. System conditions are evaluated to ensure a bounding analysis and model parameters are selected that are influential in determining the system's ability to provide offsite power adequacy. Elements included in the analysis are system load forecasts (including sufficient margin to ensure a bounding analysis over the life of the study), system generator dispatch (including outages of generators known to be particularly influential in offsite power adequacy of affected nuclear units), outage schedules for transmission elements that have significant influence on offsite power adequacy, cross-system power transfers and power imports/exports, and system modification plans and schedules. A Real Time State Estimator is used to assist in the evaluation of actual system conditions. These capabilities are described in the System Analysis Protocol of the Switchyard Interface Agreement.

The study concluded that with the additional generating capacity of Unit 3, the transmission system remains stable under the analyzed conditions, preserving the grid connection and supporting the normal and shutdown power requirements of Unit 3.

The reliability of the overall system design is indicated by the fact that there have been no widespread system interruptions. Failure rates of individual facilities are low. Transmission lines are designed to have less than one lightning flashover per 100 miles per year, and the record shows much better performance, indicating conservative designs. Most lightning-caused outages are momentary, with few instances of line

ENCLOSURE 5

Response to NRC RAI Letter 029

RAI Question 08.02-36

NRC RAI 08.02-36

In response to RAI 8.2-19, on July 28, 2008, the applicant stated that North Anna 3 complies with the requirements of 10 CFR 50.65(a)(4). In particular, the subject regulation is one aspect of the "Maintenance Rule" (10 CFR 50.65), an operational program, the implementation of which is addressed by Item 17 in FSAR Table 13.4-201 and the content of which is discussed in FSAR Section 17.6. However, the staff finds that the applicant did not address the applicability of the Maintenance Rule to switchyard equipment. The staff requests that the applicant address applicability of the Maintenance Rule to switchyard components, discuss actions to be taken to limit the risk associated with transmission system degradation and discuss actions required before performing grid-risk-sensitive maintenance activities of switchyard components (see NRC Generic Letter 2006-02: Grid Reliability and the Impact on Plant Risk and the Operability of Offsite Power referenced in SRP section 8.2).

Dominion Response

As stated in the response to RAI 8.2-19 (Dominion letter NA3-08-056R, dated July 28, 2008), North Anna Unit 3 offsite power system compliance with the requirements of 10 CFR 50.65(a)(4) is indicated in FSAR Table 1.9-201 by the stated conformance to SRP Section 8.2, Acceptance Criterion II.8. The implementation of the requirements of 10 CFR 50.65 is addressed as an operational program by Item 17 in FSAR Table 13.4-201 with an implementation schedule of prior to fuel load authorization.

Maintenance Rule Program (10 CFR 50.65) implementation is discussed in FSAR Section 17.6, which incorporates by reference NEI Technical Report 07-02, *Generic FSAR Template Guidance for Maintenance Rule Program Description for Plants Licensed Under 10 CFR Part 52.* NRC has reviewed NEI 07-02 and issued their final Safety Evaluation (SE) on January 24, 2008. NEI re-issued the report, after incorporating the NRC SE and RAIs, as NEI 07-02A. The reference to this topical report in FSAR Table 1.6-201 was updated in the response to NA3 COLA RAI 17.06-1 (Dominion letter NA3-08-052R dated July 14, 2008) to reference NEI 07-02A.

The scope of structures, systems, and components (SSCs) covered by the maintenance rule program is determined using the scoping procedure defined in the maintenance rule program description per NEI 07-02A. This scoping evaluation is performed as part of the program implementation and is not required to be completed prior to COL issuance. The offsite power system and its components will be evaluated for inclusion into the maintenance rule program in accordance with these scoping procedures during program implementation. As discussed in the program description, the expert panel is used to scope SSCs into and out of the maintenance rule program. This aspect of the program was evaluated by the NRC staff as documented in the staff's safety evaluation report for NEI 07-02A.

NEI 07-02A, Section 17.X.1.5, addresses risk assessment and risk management per 10 CFR 50.65(a)(4) and includes consideration of the issues associated with grid/offsite power system reliability as identified in NRC Generic Letter 2006-02, Items 5 and 6. NEI 07-02A, Section 17.X.5 identifies a Maintenance Rule Program implementation schedule consistent with FSAR Table 13.4-201, Item 17 (i.e., by the time that initial fuel loading has been authorized).

Therefore, although detailed Maintenance Rule Program development is not anticipated in advance of the schedule defined in Table 13.4-201, performance of grid reliability evaluations as

part of the maintenance risk assessment before performing "grid-risk-sensitive" maintenance activities (such as surveillances, post-maintenance testing, and preventive and corrective maintenance) is considered to be a necessary consideration of the program in accordance with NEI 07-02A guidance.

Proposed COLA Revision

None

ENCLOSURE 6

Response to NRC RAI Letter 029

RAI Question 08.02-37

NRC RAI 08.02-37

In response to RAI 8.2-24, you have stated that description of the station ground grid is provided in Section 8, Appendix 8A. However, the staff notes that the North Anna Station ground grid consists of the switchyard ground grid, existing Unit 1 and 2 ground grid and the new Unit 3 ground grid. The staff requests that the applicant discuss the interface and impact of station grounding due to addition of Unit 3 ground grid to the existing station ground consisting of switchyard and Unit 1 and 2 grounding. In addition, please provide a summary description of the existing grounding system at North Anna and the proposed grounding of Unit 3 in order to achieve a single point ground at that site.

Dominion Response

The existing North Anna Power Station site includes North Anna Units 1 and 2 and a switchyard, each having an installed ground grid. The addition of Unit 3 will introduce additional ground grids at the existing site.

The existing switchyard grounding system was overlaid in 2004 with a new ground grid that was tied to the existing switchyard ground grid. The new ground grid was designed and installed in accordance with the Dominion Substation Engineering Manual and IEEE 80, "Guide for Safety in AC Substation Grounding." The new ground grid uses bare 4/0 stranded copper conductors installed a minimum of 18" below grade. The new ground grid was designed to provide proper grounding for the switchyard without consideration of any other grounding system, including the existing ground grid in the switchyard and the ground grid for Units 1 and 2. The new ground overlay is connected to the existing ground grid in the switchyard, which serves to improve the quality of the entire switchyard ground grid.

The addition of Unit 3 at North Anna will also require installation of an Intermediate Switchyard, which will include a grounding grid designed and installed by the Dominion Electric Transmission Department using IEEE-80 and the Dominion Substation Engineering Manual. This ground grid design will provide proper grounding for the Intermediate Switchyard without consideration of other grounding systems.

North Anna Unit 3 will have a ground grid, designed in accordance with the codes and standards identified in ESBWR DCD Section 8A.1.2, including IEEE-80, IEEE-665, "Guide for Generation Station Grounding," and IEEE-666, "Design Guide for Electric Power Service Systems for Generating Stations."

The ground grids for Unit 3, the Intermediate Switchyard, and the existing North Anna switchyard will be interconnected. Since each of these ground grids either will provide, or is currently designed to provide, adequate grounding for the associated structures and equipment, the interconnection of all of these ground grids will serve to improve the quality of each of the ground grids. Analysis of the final interconnected configuration is not required as each ground grid individually is adequate to perform its intended function for the structures and equipment served, and the interconnection of the grids only serves to increase the individual quality of each.

Proposed COLA Revision

None

ENCLOSURE 7

Response to NRC RAI Letter 029

RAI Question 16-1

NRC RAI 16-1

In its combined license (COL) application for North Anna Unit 3, Dominion proposes that certain COL action (or information) items be addressed after COL issuance by the COL holder as a condition of the COL. The site-specific information for completing these action items mostly consists of numerical values of technical specification (TS) limits and is indicated by the use of brackets, reviewer's notes, footnotes, or other "placeholder" indicators in the generic technical specifications (GTS), and also in the proposed plant-specific technical specifications (PTS). However, this site-specific information must be provided or confirmed by the COL applicant in the COL application. The proposal for the COL holder to provide this information after COL issuance as a condition of the COL is not consistent with applicable regulations and statutes (see COL/DC-ISG-8, "Technical Specification Information that Combined License Applicants Must Provide in Combined License Applications").

Accordingly, for each site-specific information item, provide or confirm, in order of preference, (1) the site-specific information, (2) useable information that bounds the sitespecific information, or (3) a reference to an associated TS in PTS administrative controls Section 5.5, "Programs and Manuals," or 5.6, "Reporting Requirements," that requires using an NRC-approved methodology to determine the site-specific information and establishing a program or report in which the site-specific information will be documented external to the PTS.

The applicant shall describe in its COL application, including in the PTS bases as applicable (i.e., TS, TS Bases and FSAR), the following:

- *For site-specific information, the method used to determine the information and why the information is useable for facility operation in all applicable operational modes including power operation up to the proposed thermal power limit.*

  -or-

- *For bounding information, the method used to determine the information and that the information is bounding to the site-specific information, and why the information is useable for facility operation in all applicable operational modes including power operation up to the proposed thermal power limit.*

  -or-

- *Regarding the methodology approach, the administrative control TS shall (a) explicitly reference by title and date the NRC-approved methodology that is specified for determining the site-specific information, (b) require establishing an associated document or report in which to record and maintain the site-specific information external to the PTS, and (c) specify any other information or restrictions necessary and appropriate to satisfy 10 CFR 50.36. This would satisfy 10 CFR 50.36 with respect to the relocated site-specific information by virtue of the approved methodology and the restrictions spelled out in the administrative control TS; this is consistent with the standard technical specification administrative controls that require maintaining specified plant*

operating limits in the core operating limits report and the reactor coolant system pressure temperature limits report.

To facilitate a comprehensive response to this information request, a listing of all COL action, or information, items identified in chapters 16 and 16B of the ESBWR design control document, revision 5, is attached. The applicant is requested to verify that the list is complete and in addition identify which of three options listed above will be used to satisfy the requirements of 10 CFR 50.36 for each item. If the methodology approach is taken, then the applicant should explain why one of the other two options was not taken. Please see the attached tables for the list of items.

Dominion Response

The attached table lists all COL information items identified in chapters 16 and 16B of the ESBWR Design Control Document, Revision 5. The site-specific information for completing each COL information item is included in the table provided with this RAI response. The table provides the following information for each COL information item:

1. The associated general GTS COL information item number (16.0-1-A or 16.0-2-H).
2. The specific GTS COL information item number.
3. A reference to the GTS sections with which the COL information item is associated.
4. A description of the information that must be addressed in the PTS.
5. The option that was chosen to satisfy the requirements of 10 CFR 50.36.
6. The justification for the option chosen.
7. The location in the FSAR that contains the justification

Information provided to complete the COL items is not dependent upon the operational mode or thermal power level. Therefore, the information provided supports operation in all applicable operational modes including power operation up to the proposed thermal power limit.

Because Dominion's licensing approach to the ongoing DCD and COL licensing actions has been to treat the DCD as if the ESBWR design were certified, two exemptions are necessary to implement the options chosen to complete COL information items 3.1.5-1 and 5.5.13-1. Specifically, the first exemption is needed to remove the expected accumulator pressure value in Bases Surveillance Requirement 3.1.5.1. The second exemption is needed to revise the Bases description for SR 3.7.2.3 to include an expanded discussion of the acceptance criteria for the differential pressure across the Emergency Filter Unit (EFU). Dominion will work with GEH so that the need for the exemptions would be eliminated through a DCD revision. The North Anna COLA would then be revised accordingly.

Proposed COLA Revision

COLA Part 4 will be revised to address the COL information items as described above. COLA Part 7 will be revised to include the identified exemptions.

RAI 16-1 Response
Table of COL Action Items

GTS COL Information Item Group	GTS COL Information Item No.	GTS References	Description of Information that Dominion Must Address in PTS	Option	Resolution / Justification	Location of Justification
16.0-2-H	1.1-1	1.1	Pressure Temperature Limits Report (PTLR) definition.	n/a	The PTLR will be submitted to the NRC in the second quarter of 2009.	n/a
16.0-1-A	3.1.3-1	TS 3.1.3 Required Action A.1 and bases	Stuck control rod separation requirements between "slow" control rod(s).	n/a	The bracketed provision for "slow" scram times will be removed because this optional flexibility is not supported at this time. The PTS require all scram times to meet the analytical time, which assures conservative reactivity insertion rates.	Introduction
16.0-1-A	3.1.3-2	SR 3.1.3.4 and bases	Maximum scram time limits for operable control rods. Applicant to choose either: "Verify each control rod scram time from fully withdrawn to [60]% rod insertion is ≤ [ ] seconds" or "Perform applicable SRs of LCO 3.1.4."	n/a	The bracketed provision for "slow" scram times will be removed because this optional flexibility is not supported at this time. The PTS require all scram times to meet the analytical time, which assures conservative reactivity insertion rates.	Introduction
16.0-1-A	3.1.4-1	GTS 3.1.4 and bases; LCO 3.1.4, and bases; Action A and bases; Table 3.1.4-1 Notes and bases; bases Applicable Safety Analyses (ASA) discussion; SR 3.1.4.2 and SR 3.1.4.3 bases.	"Slow" control rod optional allowance.	n/a	The bracketed provision for "slow" scram times will be removed because this optional flexibility is not supported at this time. The PTS require all scram times to meet the analytical time, which assures conservative reactivity insertion rates.	Introduction
16.0-2-H	3.1.5-1	SR 3.1.5.1 and bases	Minimum and nominal control rod scram accumulator pressure.	2**	The bracketed item for minimum scram accumulator pressure will be completed. An expected pressure will be removed based on the justification provided in the exemption in Part 7 of the COLA.	B3.1.5.1
16.0-1-A	3.1.7-1	TS 3.1.7 Required Action A.1 and bases	Alternative Action for sodium pentaborate concentration not within limits.	n/a	The bracketed information will be removed because this optional flexibility is not supported at this time.	Introduction

OPTIONS:
(1) Site-specific information
(2) Useable information that bounds site-specific information
(3) NRC-approved methodology referenced

** An exemption is being requested for this item. See Part 7 of the COLA.

GTS COL Information Item Group	GTS COL Information Item No.	GTS References	Description of Information that Dominion Must Address in PTS	Option	Resolution / Justification	Location of Justification
16.0-2-H	3.1.7-2 (should be 3.1.7-1)	SR 3.1.7.8	Allowable Value for SLC system accumulator level instrumentation setting	3	The bracketed items for allowable values will be completed with reference to the Technical Specification Administrative Program in TS 5.5.11, Setpoint Control Program (SCP) because the program implements the NRC approved methodology for determining allowable values for these limits. The methodology approach was chosen because it provides greater operational flexibility.	Introduction
16.0-2-H	3.3.1.1-1	SR 3.3.1.1.3	Allowable Values for RPS Instrumentation function channel trip settings for Functions 3, 4, 5, 6, 7, 8, 9, 10, 11, 12, 13, 14, 15, 16	3	The bracketed items for allowable values will be completed with reference to the Technical Specification Administrative Program in TS 5.5.11, Setpoint Control Program (SCP) because the program implements the NRC approved methodology for determining allowable values for these limits. The methodology approach was chosen because it provides greater operational flexibility.	Introduction
16.0-1-A	3.3.1.1-2	Bases for SR 3.3.1.1.4	Allowance to exclude certain sensors or other instrumentation components from Response Time Testing	n/a	The bracketed provision for response time testing relaxation will be removed because this optional flexibility is not supported at this time.	Introduction
16.0-1-A	3.3.1.2-1	Bases for SR 3.3.1.2.4	Allowance to exclude certain portions of the actuation circuitry from Response Time Testing.	n/a	The bracketed provision for response time testing relaxation will be removed because this optional flexibility is not supported at this time.	Introduction

OPTIONS:
(1) Site-specific information
(2) Useable information that bounds site-specific information
(3) NRC-approved methodology referenced

** An exemption is being requested for this item. See Part 7 of the COLA.

GTS COL Information Item Group	GTS COL Information Item No.	GTS References	Description of Information that Dominion Must Address in PTS	Option	Resolution / Justification	Location of Justification
16.0-2-H	3.3.1.4-1	SR 3.3.1.4.5	Allowable values for NMS Instrumentation function channel trip settings for Functions 1.a, 1.b, 2.a, 2.b, 2.c	3	The bracketed items for allowable values will be completed with reference to the Technical Specification Administrative Program in TS 5.5.11, Setpoint Control Program (SCP) because the program implements the NRC approved methodology for determining allowable values for these limits. The methodology approach was chosen because it provides greater operational flexibility.	Introduction
16.0-1-A	3.3.1.4-2	Bases for SR 3.3.1.4.7	Allowance to exclude certain sensors or other instrumentation components from Response Time Testing	n/a	The bracketed provision for response time testing relaxation will be removed because this optional flexibility is not supported at this time.	Introduction
16.0-2-H	3.3.1.5-1		Not used	n/a	n/a	n/a
16.0-1-A	3.3.1.5-2	Bases for SR 3.3.1.5.4	Allowance to exclude certain portions of the actuation circuitry from Response Time Testing	n/a	The bracketed provision for response time testing relaxation will be removed because this optional flexibility is not supported at this time.	Introduction
16.0-2-H	3.3.1.6-1	SR 3.3.1.6.3	Minimum SRNM count rate (cps)	1	The bracketed value for minimum SRNM count rate will be completed based on vendor (GEH) review and confirmation that the ABWR and historically accepted source range minimum count-rate is appropriate and acceptable to support ESBWR operations.	Introduction
16.0-1-A	3.3.3.2-1	GTS 3.3.3.2 and bases	Post Accident Monitoring (PAM) Instrumentation	n/a	The bracketed information will be removed because PAM Type A Variables are not applicable to the ESBWR safety analyses. There are no operator actions are required for the first 72 hours post-DBA.	Introduction

OPTIONS:
(1) Site-specific information
(2) Useable information that bounds site-specific information
(3) NRC-approved methodology referenced

** An exemption is being requested for this item. See Part 7 of the COLA.

GTS COL Information Item Group	GTS COL Information Item No.	GTS References	Description of Information that Dominion Must Address in PTS	Option	Resolution / Justification	Location of Justification
16.0-2-H	3.3.5.1-1	SR 3.3.5.1.3	Allowable Values for ECCS Instrumentation channel trip settings for Functions 1 and 2	3	The bracketed items for allowable values will be completed with reference to the Technical Specification Administrative Program in TS 5.5.11, Setpoint Control Program (SCP) because the program implements the NRC approved methodology for determining allowable values for these limits. The methodology approach was chosen because it provides greater operational flexibility.	Introduction
16.0-1-A	3.3.5.1-2	Bases for SR 3.3.5.1.4	Allowance to exclude certain sensors or other instrumentation components from Response Time Testing	n/a	The bracketed provision for response time testing relaxation will be removed because this optional flexibility is not supported at this time.	Introduction
16.0-1-A	3.3.5.2-1	Bases for SR 3.3.5.2.4	Allowance to exclude certain portions of the actuation circuitry from Response Time Testing	n/a	The bracketed provision for response time testing relaxation will be removed because this optional flexibility is not supported at this time.	Introduction
16.0-2-H	3.3.5.3-1	SR 3.3.5.3.3	Allowable Values for ICS Instrumentation channel trip settings for Functions 1, 2, 3, 4 and 5	3	The bracketed items for allowable values will be completed with reference to the Technical Specification Administrative Program in TS 5.5.11, Setpoint Control Program (SCP) because the program implements the NRC approved methodology for determining allowable values for these limits. The methodology approach was chosen because it provides greater operational flexibility.	Introduction
16.0-1-A	3.3.5.3-2	Bases for SR 3.3.5.3.4	Allowance to exclude certain censors or other instrumentation components from Response Time Testing	n/a	The bracketed provision for response time testing relaxation will be removed because this optional flexibility is not supported at this time.	Introduction

OPTIONS:
(1) Site-specific information
(2) Useable information that bounds site-specific information
(3) NRC-approved methodology referenced

** An exemption is being requested for this item. See Part 7 of the COLA.

GTS COL Information Item Group	GTS COL Information Item No.	GTS References	Description of Information that Dominion Must Address in PTS	Option	Resolution / Justification	Location of Justification
16.0-1-A	3.3.5.4-1	Bases for SR 3.3.5.4.4.	Allowance to exclude certain portions of the actuation circuitry from Response Time Testing	n/a	The bracketed provision for response time testing relaxation will be removed because this optional flexibility is not supported at this time.	Introduction
16.0-2-H	3.3.6.1-1	SR 3.3.6.1.3	Allowable Values for MSIV Instrumentation channel trip settings for Functions 1, 2, 3, 4, 5, 6, 7	3	The bracketed items for allowable values will be completed with reference to the Technical Specification Administrative Program in TS 5.5.11, Setpoint Control Program (SCP) because the program implements the NRC approved methodology for determining allowable values for these limits. The methodology approach was chosen because it provides greater operational flexibility.	Introduction
16.0-1-A	3.3.6.1-2	Bases for SR 3.3.6.1.4	Allowance to exclude certain sensors or other instrumentation components from Response Time Testing	n/a	The bracketed provision for response time testing relaxation will be removed because this optional flexibility is not supported at this time.	Introduction
16.0-1-A	3.3.6.2-1	Bases for SR 3.3.6.2.4	Allowance to exclude certain portions of the actuation circuitry from Response Time Testing	n/a	The bracketed provision for response time testing relaxation will be removed because this optional flexibility is not supported at this time.	Introduction
16.0-2-H	3.3.6.3-1	SR 3.3.6.3.3	Allowable Values for Isolation Instrumentation channel trip settings for Functions 1 through 12	3	The bracketed items for allowable values will be completed with reference to the Technical Specification Administrative Program in TS 5.5.11, Setpoint Control Program (SCP) because the program implements the NRC approved methodology for determining allowable values for these limits. The methodology approach was chosen because it provides greater operational flexibility.	Introduction

OPTIONS:
(1) Site-specific information
(2) Useable information that bounds site-specific information
(3) NRC-approved methodology referenced

** An exemption is being requested for this item. See Part 7 of the COLA.

GTS COL Information Item Group	GTS COL Information Item No.	GTS References	Description of Information that Dominion Must Address in PTS	Option	Resolution / Justification	Location of Justification
16.0-1-A	3.3.6.3-2	Bases for SR 3.3.6.3.4	Allowance to exclude certain sensors or other instrumentation components from Response Time Testing	n/a	The bracketed provision for response time testing relaxation will be removed because this optional flexibility is not supported at this time.	Introduction
16.0-1-A	3.3.6.4-1	Bases for SR 3.3.6.4.4	Allowance to exclude certain portions of the actuation circuitry from Response Time Testing	n/a	The bracketed provision for response time testing relaxation will be removed because this optional flexibility is not supported at this time.	Introduction
16.0-2-H	3.3.7.1-1	SR 3.3.7.1.3	Allowable Values for CRHAVS Instrumentation channel trip settings for Functions 1 and 2	3	The bracketed items for allowable values will be completed with reference to the Technical Specification Administrative Program in TS 5.5.11, Setpoint Control Program (SCP) because the program implements the NRC approved methodology for determining allowable values for these limits. The methodology approach was chosen because it provides greater operational flexibility.	Introduction
16.0-1-A	3.3.7.1-2	Bases Background for TS 3.3.7.1	Control Room Habitability Area option for design features to protect occupant exposures to hazardous chemicals	n/a	The bracketed information pertaining to hazardous chemicals will be removed because hazardous chemical protection for the CRHAVS is not required based on the site-specific evaluation presented in FSAR Section 6.4.5.	Introduction
16.0-1-A	3.3.7.1-3	Bases for SR 3.3.7.1.4	Allowance to exclude certain sensors or other instrumentation components from Response Time Testing	n/a	The bracketed provision for response time testing relaxation will be removed because this optional flexibility is not supported at this time.	Introduction
16.0-1-A	3.3.7.2-1	Bases Background for TS 3.3.7.2	Control Room Habitability Area option for design features to protect occupant exposures to hazardous chemicals	n/a	The bracketed information pertaining to hazardous chemicals will be removed because hazardous chemical protection for the CRHAVS is not required based on the site-specific evaluation presented in FSAR Section 6.4.5	Introduction

OPTIONS:
(1) Site-specific information
(2) Useable information that bounds site-specific information
(3) NRC-approved methodology referenced

** An exemption is being requested for this item. See Part 7 of the COLA.

GTS COL Information Item Group	GTS COL Information Item No.	GTS References	Description of Information that Dominion Must Address in PTS	Option	Resolution / Justification	Location of Justification
16.0-1-A	3.3.7.2-2	Bases for SR 3.3.7.2.4	Allowance to exclude certain portions of the actuation circuitry from Response Time Testing	n/a	The bracketed provision for response time testing relaxation will be removed because this optional flexibility is not supported at this time.	Introduction
16.0-2-H	3.3.8.1-1	SR 3.3.8.1.3	Allowable Values for DPS Instrumentation channel trip settings for Functions 1, 2, 3, and 4	3	The bracketed items for allowable values will be completed with reference to the Technical Specification Administrative Program in TS 5.5.11, Setpoint Control Program (SCP) because the program implements the NRC approved methodology for determining allowable values for these limits. The methodology approach was chosen because it provides greater operational flexibility.	Introduction
16.0-1-A	3.4.4-1	LCO 3.4.4 and bases; SRs 3.4.4.1, 2, 3, 4, and 5, and bases; bases Background	Reference to PTLR or plant-specific PT curves as figures in PTS 3.4.4.	n/a	The PTLR will be submitted to the NRC in the second quarter of 2009.	n/a
16.0-1-A	3.4.4-2	Notes to SR 3.4.4.4 and SR 3.4.4.5, and bases.	Temperature for applicability of verification that reactor vessel flange and head flange temperatures are within limits.	n/a	The PTLR will be submitted to the NRC in the second quarter of 2009.	n/a
16.0-1-A	3.4.4-3	Bases References for GTS 3.4.4	Topical report(s) providing the methodology for determining the PT limits	n/a	The PTLR will be submitted to the NRC in the second quarter of 2009.	n/a
16.0-2-H	3.5.1-1 (Not listed in DCD)	Bases for SR 3.5.1.5 (deleted)	Not used (SRV manual actuation test conditions). This SR was deleted based on ESBWR DC RAI 3.9-168 Supplement 2 resolution. Ref. MFN 08-458.	n/a	n/a	n/a

OPTIONS:
(1) Site-specific information
(2) Useable information that bounds site-specific information
(3) NRC-approved methodology referenced

** An exemption is being requested for this item. See Part 7 of the COLA.

GTS COL Information Item Group	GTS COL Information Item No.	GTS References	Description of Information that Dominion Must Address in PTS	Option	Resolution / Justification	Location of Justification
16.0-2-H	3.7.1-1	SR 3.7.1.9	Allowable Values for IC/PCC expansion pool level instrumentation channel trip setting	3	The bracketed items for allowable values will be completed with reference to the Technical Specification Administrative Program in TS 5.5.11, Setpoint Control Program (SCP) because the program implements the NRC approved methodology for determining allowable values for these limits. The methodology approach was chosen because it provides greater operational flexibility.	Introduction
16.0-1-A	3.7.2-1 (related to COL item 6.4-2-A)	GTS 3.7.2 Required Action B.2 and bases; bases Background discussion; ASA discussion; and bases for LCO 3.7.2 and SR 3.7.2.7.	Control Room Habitability Area option for design features to protect occupant exposures to hazardous chemicals.	n/a	The bracketed information pertaining to hazardous chemicals will be removed because hazardous chemical protection for the CRHAVS is not required based on the site-specific evaluation presented in FSAR Section 6.4.5	Introduction
16.0-2-H	3.7.2-1 (should be 3.7.2-2)	SR 3.7.2.6	Allowable Value for CRHAVS main control room temperature instrumentation channel trip setting.	3	The bracketed items for allowable values will be completed with reference to the Technical Specification Administrative Program in TS 5.5.11, Setpoint Control Program (SCP) because the program implements the NRC approved methodology for determining allowable values for these limits. The methodology approach was chosen because it provides greater operational flexibility.	Introduction

OPTIONS:
(1) Site-specific information
(2) Useable information that bounds site-specific information
(3) NRC-approved methodology referenced

** An exemption is being requested for this item. See Part 7 of the COLA.

GTS COL Information Item Group	GTS COL Information Item No.	GTS References	Description of Information that Dominion Must Address in PTS	Option	Resolution / Justification	Location of Justification
16.0-1-A	3.7.4-1	LCO 3.4.7 and bases; bases ASA discussion; bases for Required Action A.1	Applicant to determine whether to adopt in LCO 3.7.4 an alternative to requiring the Main Turbine Bypass System to be operable. The alternative LCO is to make applicable the LCO 3.2.2, "Minimum Critical Power Ratio (MCPR)," limits for an inoperable Main Turbine Bypass System, as specified in the Core Operating Limits Report (COLR).	n/a	The bracketed information will be removed because this optional flexibility is not supported at this time.	Introduction
16.0-1-A	3.7.4-2	SR 3.7.4.1 Frequency and bases	Applicant to determine whether to propose a surveillance interval greater than 31 days for cycling a turbine bypass valve.	n/a	The brackets will be removed from the frequency of SR 3.7.4.1 and the stated frequency of 31 days will be used because this optional flexibility is not supported at this time.	Introduction
16.0-1-A	3.7.6-1	LCO 3.7.6 and bases; Bases ASA discussion; Bases for Required Action A.1	Applicant to determine whether to adopt in LCO 3.7.6 an alternative to requiring all Selected Control Rod Run-In (SCRRI) and Select Rod Insert (SRI) functions to be operable. The alternative LCO is to make applicable the LCO 3.2.2, "Minimum Critical Power Ratio (MCPR)," limits for an inoperable SCRRI and/or SRI function, as specified in the COLR.	n/a	The bracketed information will be removed because this optional flexibility is not supported at this time.	Introduction
16.0-2-H	3.7.6-2	SR 3.7.6.6	Allowable Value for SCRRI/SRI loss-of-feedwater-heating instrumentation channel temperature trip setting	3	The bracketed items for allowable values will be completed with reference to the Technical Specification Administrative Program in TS 5.5.11, Setpoint Control Program (SCP) because the program implements the NRC approved methodology for determining allowable values for these limits. The methodology approach was chosen because it provides greater operational flexibility.	Introduction

OPTIONS:
(1) Site-specific information
(2) Useable information that bounds site-specific information
(3) NRC-approved methodology referenced

** An exemption is being requested for this item. See Part 7 of the COLA.

GTS COL Information Item Group	GTS COL Information Item No.	GTS References	Description of Information that Dominion Must Address in PTS	Option	Resolution / Justification	Location of Justification
16.0-2-H	3.8.1-1	SR 3.8.1.2 and bases	Acceptance criteria for battery charger testing (minimum duration of test in hours) consistent with battery size	2	The bracketed value will be completed with bounding values based on GUTOR manufacturer's recommendations for battery charger test duration. Rated battery charger output current value is in ESBWR DCD Tier 2 Table 8.3-4.	Bases for SR 3.8.1.2
16.0-2-H	3.8.1-2	Bases for GTS 3.8.1 Required Action A.2	Acceptance criteria for verification that battery is fully charged consistent with manufacturer recommendations	1	The bracketed values will be completed for stabilized charging current or float current based on BAE battery manufacturer's recommended fully charged float current limits for BAE 2V-24OPzV-3000 battery string.	Bases for GTS 3.8.1 and 3.8.3
16.0-2-H	3.8.1-3	SR 3.8.1.3 Note and bases	Use of a modified performance test for verification of battery capacity consistent with manufacturer recommendations.	1	The bracketed option to utilize a modified performance discharge test in lieu of the battery service test will be removed because the operational flexibility for the ESBWR valve regulated lead-acid battery is not being sought. The remaining testing required will not impose an impediment to normal plant operations.	Introduction
16.0-2-H	3.8.1-4	Bases for SR 3.8.1.1	Battery cell parameters consistent with manufacturer specifications.	1	The bracketed values for battery cell parameters will be completed. Various values for battery parameters are based on the BAE 2V-24OPzV-3000 battery manufacturer's recommendations. Total number of battery cells is supported in ESBWR DCD Tier 2 Table 8.3-4.	Introduction
16.0-2-H	3.8.1-5	Bases background for GTS 3.8.1, and bases for SR 3.8.1.1	Battery margin for aging factor and state of charge uncertainty (from expected battery life).	1	The bracketed values for battery cell parameters will be completed based on the BAE 2V-24OPzV-3000 battery manufacturer's recommendations. The battery life is provided in ESBWR DCD Tier 2 Section 8.3.2.1.1.	Introduction

OPTIONS:
(1) Site-specific information
(2) Useable information that bounds site-specific information
(3) NRC-approved methodology referenced

** An exemption is being requested for this item. See Part 7 of the COLA.

GTS COL Information Item Group	GTS COL Information Item No.	GTS References	Description of Information that Dominion Must Address in PTS	Option	Resolution / Justification	Location of Justification
16.0-2-H	3.8.3-1	SR 3.8.3.1 and bases; bases for Required Action B.2	Acceptance criteria for verification that battery is fully charged [stabilized charging current or float current within limits] consistent with manufacturers recommendations	1	The bracketed values will be completed for stabilized charging current or float current based on BAE battery manufacturer's recommended fully charged float current limits for BAE 2V-24OPzV-3000 battery string.	Bases for GTS 3.8.1 and 3.8.3
16.0-2-H	3.8.3-2	SR 3.8.3.6 and bases	Use of a modified performance test for verification of battery capacity	1	The bracketed option to utilize a modified performance discharge test in lieu of the battery service test will be removed because the operational flexibility for the ESBWR valve regulated lead-acid battery is not being sought. The remaining testing required will not impose and impediment to normal plant operations.	Introduction
16.0-2-H	3.8.3-3	TS 3.8.3: Actions A and F and SR 3.8.3.5; SR 3.8.3.2; bases Background; bases for Actions A, B, and F; bases for SRs 3.8.3.2 and 3.8.3.5	Battery cell parameters consistent with manufacturer specifications. Minimum connected cell float voltage. Minimum pilot cell float voltage.	1	The bracketed values for battery cell parameters will be completed. Various values for battery parameters are based on the BAE 2V-24OPzV-3000 battery manufacturer's recommendations. Total number of battery cells is supported in ESBWR DCD Tier 2 Table 8.3-4.	Introduction
16.0-2-H	3.8.3-4	SR 3.8.3.6 Frequency and bases	Battery margin for aging factor and state of charge uncertainty	1	The bracketed values for battery cell parameters will be completed based on the BAE 2V-24OPzV-3000 battery manufacturer's recommendations. The battery life is provided in ESBWR DCD Tier 2 Section 8.3.2.1.1.	Introduction
16.0-2-H	3.9.5-1	SR 3.9.5.2 and bases; Bases for LCO 3.9.5	Minimum CRD scram accumulator pressure	2**	The bracketed item for minimum scram accumulator pressure will be completed. An explicit normal operating pressure will be removed based on the justification provided in the exemption in Part 7 of the COLA.	Bases for SR G643.1.5.1

OPTIONS:
(1) Site-specific information
(2) Useable information that bounds site-specific information
(3) NRC-approved methodology referenced

** An exemption is being requested for this item. See Part 7 of the COLA.

GTS COL Information Item Group	GTS COL Information Item No.	GTS References	Description of Information that Dominion Must Address in PTS	Option	Resolution / Justification	Location of Justification
16.0-1-A	4.1-1	TS 4.1	Plant-specific description of site location.	n/a	The bracketed information will be replaced with the plant-specific description of the plant location that is consistent with the FSAR description of the site location.	Introduction
16.0-1-A	5.2.2-1	TS 5.2.2	Non-licensed operator manning requirements for multi-unit site	n/a	The standard wording applicable to single-unit manning will be maintained because the ESBWR is a single unit facility.	Introduction
16.0-1-A	5.3.1-1	TS 5.3.1	Unit staff qualifications requirements	n/a	The bracketed information on the specification of minimum qualifications for members of the unit staff will be removed and an exception for cold license operator training added. The unit staff qualification standards provided are consistent with the FSAR, including FSAR Section 13.2, for the stated exception.	Introduction
16.0-1-A	5.4.1-1	TS 5.4.1.a	Guidance documents for written procedures	n/a	The brackets will be removed because written procedures are established, implemented, and maintained covering activities defined in the bracketed guidance documents.	Introduction
16.0-1-A	5.4.1-2	TS 5.4.1.b	Guidance documents for emergency operating procedures	n/a	The brackets will be removed because written procedures are established, implemented, and maintained covering activities defined in the bracketed guidance documents.	Introduction
16.0-1-A	5.5.6-1	TS 5.5.6	Outdoor Liquid Storage Tank Radioactivity Monitoring Program	n/a	The bracketed information for applicants incorporating unprotected outdoor liquid radioactive storage tanks in their design will be removed because the plant-specific design does not include temporary outdoor liquid storage tanks.	Introduction
16.0-1-A	5.5.9-1	TS 5.5.9	Containment Leakage Rate Testing Program plant-specific exceptions to Regulatory Guide 1.163	n/a	The bracketed information for applicants requiring additional exemptions to RG 1.163 will be removed because no further exemptions to RG 1.163 are requested in the COLA.	Introduction

OPTIONS:
(1) Site-specific information
(2) Useable information that bounds site-specific information
(3) NRC-approved methodology referenced

** An exemption is being requested for this item. See Part 7 of the COLA.

GTS COL Information Item Group	GTS COL Information Item No.	GTS References	Description of Information that Dominion Must Address in PTS	Option	Resolution / Justification	Location of Justification
16.0-2-H	5.5.10-1	TS 5.5.10.a	Battery cell parameters consistent with manufacturer specifications. Minimum connected cell float voltage	1	The bracketed values for battery cell parameters will be completed. Various values for battery parameters are based on the BAE 2V-24OPzV-3000 battery manufacturer's recommendations. Total number of battery cells is supported in ESBWR DCD Tier 2 Table 8.3-4.	Bases for SR 3.8.1.1
16.0-2-H	5.5.11-1	TS 5.5.11	Setpoint Control Program references to NRC staff-approved setpoint methodology and the associated NRC SER	n/a	Removal of the brackets requires NRC approval of the GEH setpoint methodology. Following NRC approval of the GEH setpoint methodology, the approved setpoint methodology revision and the corresponding NRC Safety Evaluation date, as well as the applicable ADAMS accession numbers will be provided in a subsequent submittal to complete these brackets.	Introduction
16.0-1-A	5.5.12-1	TS 5.5.12	Control Room Habitability Area (CRHA) Boundary Program requirements for hazardous chemical releases	n/a	The bracketed information pertaining to hazardous chemicals will be removed because hazardous chemical protection for the CRHAVS is not required based on the site-specific evaluation presented in FSAR Section 6.4.5	Introduction

OPTIONS:
(1) Site-specific information
(2) Useable information that bounds site-specific information
(3) NRC-approved methodology referenced

** An exemption is being requested for this item. See Part 7 of the COLA.

GTS COL Information Item Group	GTS COL Information Item No.	GTS References	Description of Information that Dominion Must Address in PTS	Option	Resolution / Justification	Location of Justification
16.0-2-H	5.5.13-1	TS 5.5.13.d	Ventilation Filter Test Program (VFTP) requirement for control room habitability area (CRHA) heating, ventilation, and air conditioning (HVAC) subsystem (CRHAVS) emergency filtration unit (EFU) differential pressure acceptance criteria (EFU includes HEPA filters, prefilters, and carbon adsorbers)	2**	The bracketed values for the maximum pressure drop across combined HEPA filters, the prefilters, and the carbon adsorbers will be completed. The value provided is a bounding value based upon the ability of the EFU fan to deliver the required flow considering the pressure drop, such that the EFU fan motor current remains within the value assumed in the battery load calculations. Additional discussions will be incorporated in the Bases for SR 3.7.2.3 describing the assumptions used in developing the bounding value based on the justification provided in the exemption in Part 7 of the COLA.	Bases for SR 3.7.2
16.0-1-A	5.6.1-1	TS 5.6.1	Applicant to determine if allowance for multiple unit stations is applicable to PTS. If applicable, a single Annual Radiological Environmental Operating Report may be prepared.	n/a	The brackets will be removed from the Notes because multi-unit site options and standards formatting in the Notes apply to the plant-specific site.	Introduction
16.0-1-A	5.6.1-2	TS 5.6.1	Applicant to determine format of Annual Radiological Environmental Operating Report.	n/a	The brackets allowing the applicant to specify the format of the Annual Radiological Environmental Operating Report will be removed to retain the standard option provided in TS 5.6.1 because the standard format applies to the plant-specific site.	Introduction

OPTIONS:
(1) Site-specific information
(2) Useable information that bounds site-specific information
(3) NRC-approved methodology referenced

** An exemption is being requested for this item. See Part 7 of the COLA.

GTS COL Information Item Group	GTS COL Information Item No.	GTS References	Description of Information that Dominion Must Address in PTS	Option	Resolution / Justification	Location of Justification
16.0-1-A	5.6.2-1	TS 5.6.2	Applicant to determine if allowance for multiple unit stations is applicable to PTS. If applicable, a single Radioactive Effluent Release Report, with content required for a multiple unit report, may be prepared.	1	The bracketed option to specify the format of the Annual Radiological Environmental operating Report will be removed and that standard option retained because the standard format applies to the plant-specific site.	Introduction
16.0-1-A	5.6.3-1	TS 5.6.3	Core Operating Limits Report (COLR) reference to Specification 3.7.4, "Main Turbine Bypass System." See COL item 3.7.4-1.	n/a	The bracketed information will be removed because this optional flexibility is not supported at this time.	Introduction
16.0-1-A	5.6.3-2	TS 5.6.3	Applicant to reference in TS 5.6.3.a any additional individual specifications that address core operating limits, and in TS 5.6.3.b the associated NRC approved methods used to determine the core operating limits.	n/a	The bracketed information allowing the option to list additional specifications that may reference COLR will be removed because there are no additional Specifications addressing COLR.	Introduction
16.0-2-H	5.6.4-1	TS 5.6.4	Applicant to add listing of analytical methods used to determine the RCS pressure and temperature limits in Specification for PTLR, if PTLR adopted in PTS. In lieu of a PTLR, the applicant may insert its plant-specific PT curves as figures in TS 3.4.4 and omit TS 5.6.4.	n/a	The PTLR will be submitted to the NRC in the second quarter of 2009. The approved PTLR methodology revision and the corresponding NRC Safety Evaluation date, as well as applicable ADAMS accession numbers will be provided in a subsequent submittal.	n/a
16.0-1-A	5.6.5-1	TS 5.6.5	Post Accident Monitoring Report	n/a	The bracketed information will be removed because PAM Type A Variables are not applicable to the ESBWR safety analyses. There are no operator actions are required for the first 72 hours post-DBA.	Introduction

OPTIONS:
(1) Site-specific information
(2) Useable information that bounds site-specific information
(3) NRC-approved methodology referenced

** An exemption is being requested for this item. See Part 7 of the COLA.

From: Thomas Bergman
Sent: Friday, January 23, 2009 12:39 PM
To: russ bell (rjb@nei.org)
Cc: David Matthews; Felicia Keith; Meena Khanna; Belkys Sosa; Eileen McKenna; Jeffrey Cruz; Joseph Colaccino; Larry Burkhart; Michael Norato; Mohammed Shuaibi; Stephanie Coffin
Subject: NRC response to GDC 2, 4 and 5 one-pager

In a December 19, 2008, email, you provided an industry position regarding the applicability of GDC's 2, 4 and 5 to the offsite power system (ML090220480). The staff agrees that GDCs 2 and 4 do not apply, and that GDC 5 would only apply where systems are shared among units. The staff will clarfiy this position in an ISG and the next update to the SRP.

This email will be added to all appropriate dockets.

Thank you.

Tom Bergman
Deputy Director for Licensing Operations
Division of New Reactor Licensing
Office of New Reactors
(O) 301-415-1199
(C) 240-688-6527

E-mail Properties

Mail Envelope Properties (BB882299B277DB4C9C9A613B507A6F6006A4A1269D)

Subject: NRC response to GDC 2, 4 and 5 one-pager
Sent Date: 1/23/2009 12:39:06 PM
Received Date: 1/23/2009 12:39:06 PM
From: Thomas Bergman

Created By: Thomas.Bergman@nrc.gov

Recipients:
rjb@nei.org (russ bell (rjb@nei.org))
Tracking Status: None
David.Matthews@nrc.gov (David Matthews)
Tracking Status: None
Felicia.Keith@nrc.gov (Felicia Keith)
Tracking Status: None
Meena.Khanna@nrc.gov (Meena Khanna)
Tracking Status: None
Belkys.Sosa@nrc.gov (Belkys Sosa)
Tracking Status: None
Eileen.McKenna@nrc.gov (Eileen McKenna)
Tracking Status: None
Jeffrey.Cruz@nrc.gov (Jeffrey Cruz)
Tracking Status: None
Joseph.Colaccino@nrc.gov (Joseph Colaccino)
Tracking Status: None

Larry.Burkhart@nrc.gov (Larry Burkhart)
Tracking Status: None
Michael.Norato@nrc.gov (Michael Norato)
Tracking Status: None
Mohammed.Shuaibi@nrc.gov (Mohammed Shuaibi)
Tracking Status: None
Stephanie.Coffin@nrc.gov (Stephanie Coffin)
Tracking Status: None

Post Office:
HQCLSTR01.nrc.gov

Files	Size	Date & Time
MESSAGE	17335	1/23/2009

Options
Expiration Date:
Priority: olImportanceNormal
ReplyRequested: False
Return Notification: False

Sensitivity: olNormal
Recipients received:

Industry Position on the Applicability of
General Design Criteria (GDC) 2, 4 and 5 to the Offsite Power System (OPS)

Formatted: Left: 1", Right: 1"

Summary of the GDC: GDC 2 states that structures, systems, and components (SSCs) important to safety shall be designed for protection against natural phenomena, such as earthquakes, tornadoes, hurricanes, and floods, without loss of function. GDC 4 requires SSCs important to safety to be designed to accommodate environmental and dynamic effects (missiles, pipe whipping, etc). GDC 5 provides restrictions on the sharing of SSCs important to safety among nuclear plant units.

NRC Staff Position: The NRC staff has stated that COL applicants must demonstrate that the OPS complies with certain portions of GDC 2, 4, and 5, as provided in the Standard Review Plan (SRP). The staff has stated that the OPS is important to safety (and therefore subject to GDC 2, 4, and 5) because the OPS is the preferred power source and performs a defense in depth function.

Industry Position: The recent revision of the SRP constitutes an unwarranted change in the NRC's position and is inconsistent with the NRC's previous position on the applicability of GDC 2 and 4 to the OPS:

- The OPS is not safety-related. Additionally, for passive plants, design requirements for non-safety related systems like the OPS are determined using the RTNSS process as specified in SECY-94-084. Evaluations for ESBWR and AP1000 using this process have determined that design requirements in GDC 2 and 4 are not applicable to the OPS.
- NRC has not required the current fleet of operating nuclear plants to comply with GDC 2, 4 or 5. Furthermore, Section 8.1 of Tier 2 of the Design Control Documents (DCDs) for the ABWR and AP1000 (both of which have both been certified by the NRC) explicitly state that GDC 2, 4, and 5 are not applicable to the OPS.
- For more than 25 years, prior to the recent revision of the SRP in 2007, SRP 8.1 has stated that GDC 2 and 4 are not applicable to the OPS.
- Applying GDC 2 and 4 to the OPS would be inconsistent with other regulations. For example, 10 CFR 50.49, which applies to electrical components important to safety, does not apply to the OPS. Additionally, Appendix S to Part 50, which provides detailed criteria for implementing the seismic requirements in GDC 2, does not apply to the OPS.
- The SRP does not require compliance with GDC 2 and 4. For example, SRP 8.2 states that the OPS should be designed for atmospheric temperatures, high wind, rain, lightning, ice and snow; it does not require the OPS to be designed for other conditions listed in GDC 2, such as earthquakes, tornados, hurricanes, and floods. Thus, the provisions in the SRP related to GDC 2, 4, and 5 represent guidance rather than a statement that those GDC are legally applicable to the OPS.

Safety Significance: This issue is not a matter of safety significance.

- The current fleet of operating nuclear plants are safe, and yet their OPS have not been required to satisfy GDC 2, 4, and 5 - - their switchyards and transmission systems are not designed to withstand earthquakes, tornados, hurricanes, windborne missiles, etc.
- Like operating plants, new plants have provided adequate design requirements for the OPS without applying GDC 2, 4, and 5 or the SRP statements that relate to them. Examples include requirements for reliability and stability analyses of the transmission systems and evaluation of loss of offsite power in the site-specific PRA.
- The offsite power systems and offsite transmission networks are designed to transmission system and industry standards that include performance requirements relative to exposure to various environmental conditions, such as wind, precipitation, lightning and temperature variation.
- Designing switchyards and transmission lines to fully comply with the requirements of GDC 2, 4, and 5 would not make offsite power more reliable, because transmission systems and the grid are not designed to withstand these loads.

Recommendations: The NRC should continue to apply the position that it has taken in past licensing proceedings and in past guidance, and should not apply GDC 2, 4, and 5 to the OPS for new plants.

Industry Position on the Applicability of
General Design Criteria (GDC) 2, 4 and 5 to the Offsite Power System (OPS)

Request for Additional Information No. 1871 Revision 0

2/18/2009

North Anna, Unit 3
Dominion
Docket No. 52-017
SRP Section: 08.02 - Offsite Power System
Application Section: 8.2

QUESTIONS for Electrical Engineering Branch (EEB)

08.02-38

RAI 8.2-27S1

In response to RAI 8.2-27, the applicant stated that the switchyard voltage limits were established for the operation of Units 1 and 2. Since Unit 3 will be interconnecting into the same switchyard, Unit 3 will be operating under the same voltage limits. On the basis of its review, the staff finds that the applicant did not address the effect of largest unit (NA 3) trip on the switchyard voltage and frequency limits. Per GDC-17 requirements, the staff requests that the applicant discuss the effect of largest unit (NA 3) trip on the switchyard voltage and frequency.

08.02-39

RAI 8.2-29S1

In response to RAI 8.2-29, the applicant stated that no periodic testing will be required for 230 kV underground cables because Dominion will use 230 kV cables with design features (metallic sheath) that will avoid insulation degradation from moisture. The staff does not agree with the applicant because operating experience (the licensee's responses to NRC Generic Letter 2007-1) have indicated that metallic sheathed cables, with similar design features as described by the applicant, have failed. Contributing causes to the failed cables were submergence or wet conditions for an extended period of time and installation issues. The operating experience has also shown that cross-linked polyethylene (XLPE) or high-molecular-weight polyethylene insulation materials are most susceptible to water tree formation. The formation and growth of water trees vary directly with operating voltage.

Cable failures have a variety of causes, including exposure to electrical transients or aging effects caused by moisture intrusion and water treeing due to adverse abnormal environmental conditions during operation. Contributing causes, such as manufacturing defects or damage caused by shipping and installation, could initiate the aging effects. The likelyhood of failure from any of these causes increase over time as the cable insulation degrades. Therefore, periodic testing will determine the health of the cable. The staff is in the process of developing a regulatory guide for cable monitoring program. For license renewals, the staff has used Generic Aging Lessons Learned (GALL) Aging Magagement Program (AMP) XI.E3, "Inaccessible Medium-Voltage Cables Not Subject to 10 CFR 50.49 environmental Qualification requirements Program". The above AMP requires both testing and inspection of water accumulation.

The staff requests that the applicant provide a revised response to include both testing and inspection for water accumulation for their 230 kV underground cables.

Request for Additional Information No. 1947 Revision 0

2/17/2009

North Anna, Unit 3
Dominion
Docket No. 52-017
SRP Section: 14.03.06 - Electrical Systems - Inspections, Tests, Analyses, and Acceptance Criteria
Application Section: 14.3.6

QUESTIONS for Electrical Engineering Branch (EEB)

14.03.06-1

Section 4, “Interface material” of DCD, Tier 1, rev.4 of ESBWR design states that an applicant for a combined license (COL) that reference the ESBWR certified design must provide design feature or characteristics that comply with the interface requirements for the plant design and inspections, tests, analyses, and acceptance criteria (ITAAC) for the site specific portion of the facility design, in accordance with 10 CFR 52.79(c). However, no interface requirements were identified for the offsite power system in the certified design. In RAIs 14.3-394 and 14.3-394 S1, the NRC staff asked GEH to revise Section 4 of DCD, Tier 1 to include interface requirements for the offsite power system for demonstrating the capacity and capability of the offsite power system. In response to RAI 14.3-394 S1, on December 9, GEH stated that a COL applicant referencing the ESBWR certified design shall develop an ITAAC to verify that the as-built offsite portion of the preferred power supply (PPS) from the transmission network to the interface with the onsite portions of the PPS satisfy the applicable provisions of GDC 17. Specifically, the ITAAC shall verify :

(1) At least two independent circuits supply electric power from the transmission network to the interface with the onsite portions of the PPS.
(2) Each offsite circuit interfacing with the onsite portions of the PPS is adequately rated to supply the load requirements during design basis operating modes.
(3) During steady state operation, the offsite portion of the PPS is capable of supplying voltage at the interface with the onsite portions of the PPS that will support operation of safety-related loads during design basis operating modes.
(4) During steady state operation, the offsite portion of the PPS is capable of supplying required frequency at the interface with the onsite portions of the PPS that will support operation of safety-related loads during design basis operating modes.
(5) The fault current contribution of the offsite portion of the PPS is compatible with the interrupting capability of the onsite fault current interrupting devices.

Provide an ITAAC to verify that the as-built offsite portion of the preferred power supply (PPS) from the transmission network to the interface with the onsite portions of the PPS satisfy the applicable provisions of GDC 17.

Request for Additional Information No. 1207 Revision 0

10/16/2008

North Anna, Unit 3
Dominion
Docket No. 52-017
SRP Section: 08.02 - Offsite Power System
Application Section: 8.2

QUESTIONS for Electrical Engineering Branch (EEB)

08.02-33

RAI 8.2-16 S1

In response to RAI 8.2-16, the applicant, on July 28, 2008, stated that the North Anna switchyard is not important to safety for Unit 3, and thus GDC 5 is not applicable. Additionally, the applicant stated that Unit 3 is an ESBWR, which is a passive design, and as such, it does not rely on offsite power to perform any safety-related function, or to support safety-related functions.

The NRC staff finds the applicant's response to be unacceptable. The staff believes that the offsite power system performs a safety function in ESBWR design as it provides power to safety-related battery chargers and safety-related uninterruptible power system (UPS) during normal, abnormal and accident conditions. The staff recognizes that the passive plants are designed to rely on passive systems to perform design-basis functions of the reactor coolant makeup and decay heat removal. However, the passive designs also include active systems that provide defense-in-depth capabilities for reactor coolant makeup and decay heat removal. These active systems are the first line of defense to reduce challenges to the passive systems in the event of transients or plant upsets.

Therefore, the staff concludes that the offsite power system plays an important role in ESBWR design. North Anna Unit 3 switchyard is shared with Units 1& 2 switchyard. In order for the staff to ensure the adequacy of the offsite power system design at North Anna 3, the offsite power system must satisfy the acceptance criteria based on meeting the relevant requirements of GDC 5. NUREG-0800,"Standard Review Plan," Section 8.2.II provides sufficient guidance with respect to the portions of GDC 5 that are applicable to offsite power systems. The staff requests that the applicant provide a discussion on how the requirements of GDC 5 are met.