Model 1860A Manufacturing Manual

Configuration Type 1860A-C1

Document Identifier:

Manufacturing_Manual_Config_C_1.2.odt

Location:

C:\admwork\Model1860\Documents\Production_Manual\1860-00\Construction_Detail\

Contributors:

Kieren Grogan, eQuipment Safety Systems (kieren@eqss.com.au)
Ted Parrott, eQuipment Safety Systems (ted@eqss.com.au)
Richard Teh, eQuipment Safety Systems (richard@eqss.com.au)

Abstract:

Document Abstract

Document Status:

Document Status

Revision History

Revision History for this document. This section only notes major contributions by the editors. Further information may be found in VSS.

Revision	***Author***	***Notes***
1.0	ETP	Document Creation
1.1	R.T	Check of process sequence
1.3	K.R.G	Minor edit & document format

Documentation Conventions

Important Information

Table of Contents

Quality Assurance

The Model 1860 Radiation Transport Cask will adhere to a high level of quality. To achieve this, quality assurance procedures must be followed through each step of production

Ordering Of Materials & Vendor Parts

Engineering

1. Check stock of parts and materials.
2. Obtain from marketing the number and configuration of the units to be built.
3. Assign serial numbers.
4. Prepare a cutting out line to determine the amount of raw materials to be purchased.
5. Prepare a list of the vendor parts required.
6. Pass the item lists to purchasing.

Purchasing

1. Using the engineering list of materials, obtain a quotation from the preferred suppliers.
2. Consult with Engineering on,
   a. The use of excess materials.
   b. Number of parts to be cut from raw materials.
   c. Number of Vendor parts to be ordered.
3. Prepare the orders have them checked by engineering.
4. Orders are to be signed by authorised officer.

Receipt of Materials

1. Make a physical check of size and quantity of materials received against that ordered.
2. Mark all materials with the appropriate order number.
3. If a tolerance has been specified outside the class specification take measurements to confirm the correct tolerance has been supplied.
4. Check material Q.A. documents have been received. Enter Q.A. documents into history file of the serial number of the item under construction and the purchase order file.

Construction QA

Ordering Of Component Parts

1. Determine the specific parts and number or parts to be supplied.
   a. Provide drawings of the parts to be manufactured to the supplier of the parts or service.
   b. Discuss with the manufacturing unit the requirements and detail of each part.
   c. Obtain a quotation for the parts to be ordered.
2. Prepare a purchase order listing the parts by description, part number and quantity.
3. Advise the manufacturing unit of the numbers identifying the raw materials.
4. Send Q.A checked drawings for the parts nominated on the order to the manufacturing unit.
5. Despatch the Q.A checked raw materials to the Manufacturing Unit
   a. On receipt, the manufacturing unit is to ensure they have received the correct materials.
   b. On receipt, the manufacturing unit is to ensure they have received sufficient materials to produce the ordered components.
   c. The manufacturing unit is to confirm they have received the correct material and quantity.

Manufacturing Of Component Parts

1. Parts are to be produced as per the drawings, from the material supplied.
2. Any material left over is to be returned to A&DM with the order number legible
3. All Parts produced are to be checked against the nominated Q.A control dimensions
4. When all parts to a particular drawing are complete and Q.A checked the Q.A and date box on the appropriate drawing is to be filled in and the drawing returned to A&DM.
5. On advice from the manufacturing unit that the parts are complete and Q.A checked, A&DM's engineers will.
   a. Ensure Q.A boxes on all drawings are completed.
   b. Carry out spot checks to ensure compliance.
   c. Transfer the components to the next point of manufacture.
6. Mark up the master Q.A document confirming parts compliance with specifications.

Assemblies

1. Engineering to prepare a configuration specific construction manual with an assigned serial number.
2. Prepare a purchase order for the construction of the assemblies.
3. Construction manual is to be issued with the purchase order.
4. Component parts are to be delivered to the manufacturing unit.
5. Component parts are to be checked against the part Q.A drawing to confirm compliance.
6. If no issues are raised, it is assumed the assembly can be manufactured from the component part.
7. At the completion of each assembly the Q.A dimensions are to be checked for conformity to the drawing and the Q.A box Signed off and dated.
8. The sequence continues to the end of the deliverables.
9. On advice from the manufacturing unit that the parts are complete and Q.A checked, A&DM's engineers will.
   a. Carry out spot checks to ensure compliance.
   b. Ensure Q.A boxes on all drawings are completed and mark up the master Q.A. document confirming compliance.
10. Transfer the components to the next point of manufacture.
11. Take the Construction Manual to the next point of manufacture.
12. Repeat this sequence until final assembly is complete.

Final Q.A

1. After the final construction procedures are complete, A&DM's engineering team will review all drawings for notation from the constructors on methods of making the construction process smoother. All suggestions will be considered.
   a. Changes in procedure that have no effect on the design of the attenuator will be incorporated. Variations to the construction manual are to be forwarded to ARPANSA.
   b. Suggestions that could impact on the integrity of the attenuator are to be discussed and reviewed with ARPANSA.
      i. If the variations can be resolved by reasoned argument a submission to ARPANSA will be developed.
      ii. If the variations require a new destructive testing program the economical impact will be considered prior to commitment.
2. Transfer tools jigs and assemblies are to be connected up and tested to ensure smooth easy source drawer transfer.
3. All Q.A checked drawings are to be checked and the master Q.A List is to be signed off and filed in, this will then be stored in the cask history file.

4. Final Q.A. Documents are to be forwarded to ARPANSA

First Use Survey

1. First use Survey (for procedures refer User Manual) and capacity calculations are to be forwarded to ARPANSA and filed in the cask history file.
2. Maximum allowable activity label to be fixed to the cask. A digital photograph of the label is to be forwarded to ARPANSA and filed in the cask history file.

Construction Detail

General Notice

THIS SECTION IS TO BE READ IN CONJUNCTION WITH THE 1860A-01 DRAWINGS

The sequence is a step by step procedure in the construction of the cask starting with cut material, the construction of assemblies and the bringing together in sequence the next part or assembly to be added at the appropriate step to build the cask.

Welding Standards & QA Compliance

1. All Welding Procedures are to AS/NZS 1554.6: 1994 Category 1B (III) & AWS D1.6:2007
2. Welding Technicians must have current certification for AS/NZS 1554.6: 1994
3. All drawings to be QAed (Completed Drawings to be scanned into History File)
4. This Manual with QAed Drawings to be filed as Hard Copy evidence of conformity.

Process Flowchart

As below

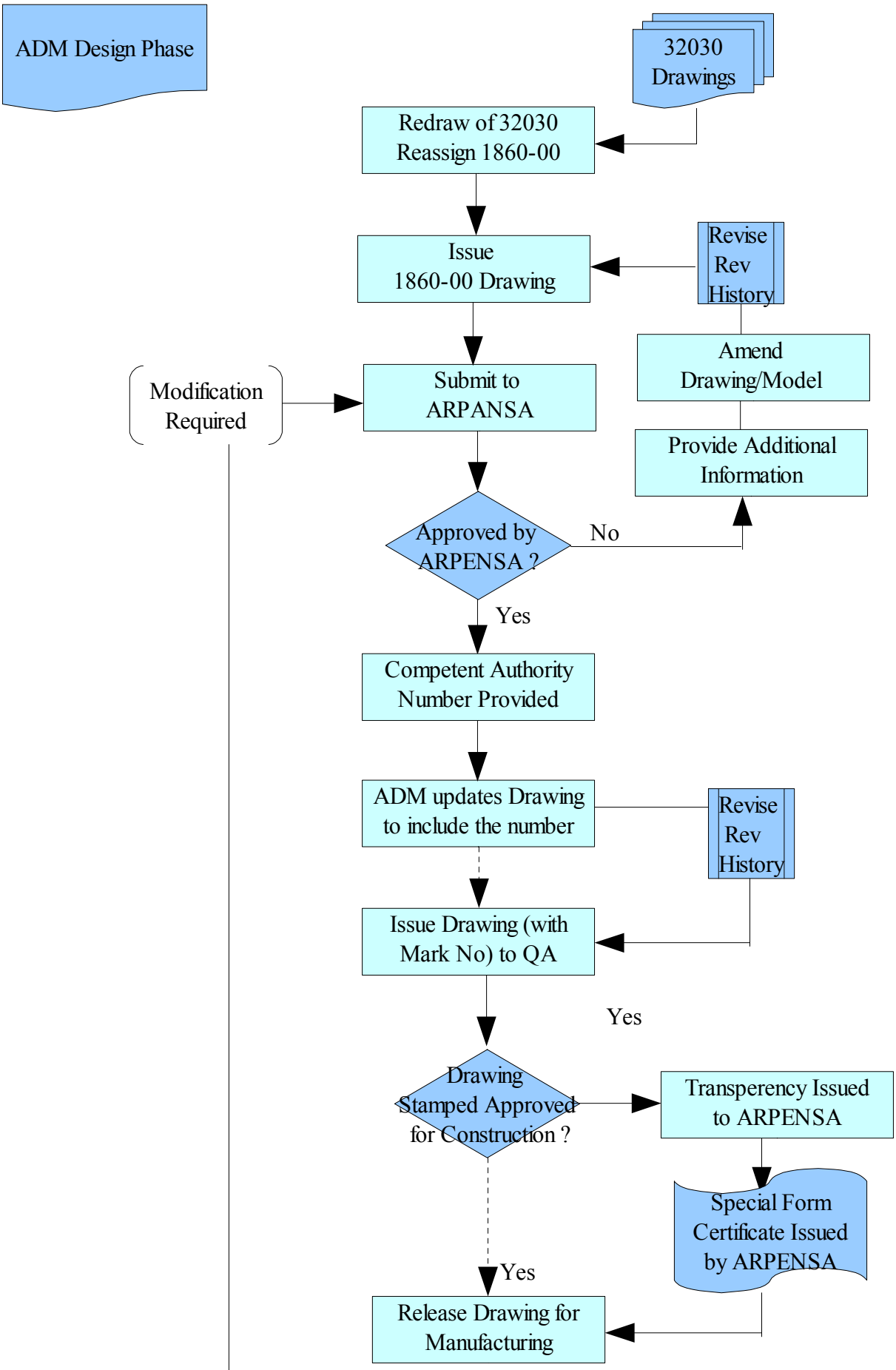
ADM Design Phase
32030 Drawings
Redraw of 32030 Reassign 1860-00
Issue 1860-00 Drawing
Revise Rev History
Amend Drawing/Model
Provide Additional Information
Modification Required
Submit to ARPANSA
Approved by ARPENSA ?
No
Yes
Competent Authority Number Provided
ADM updates Drawing to include the number
Revise Rev History
Issue Drawing (with Mark No) to QA
Yes
Drawing Stamped Approved for Construction ?
Transperency Issued to ARPENSA
Special Form Certificate Issued by ARPENSA
Yes
Release Drawing for Manufacturing

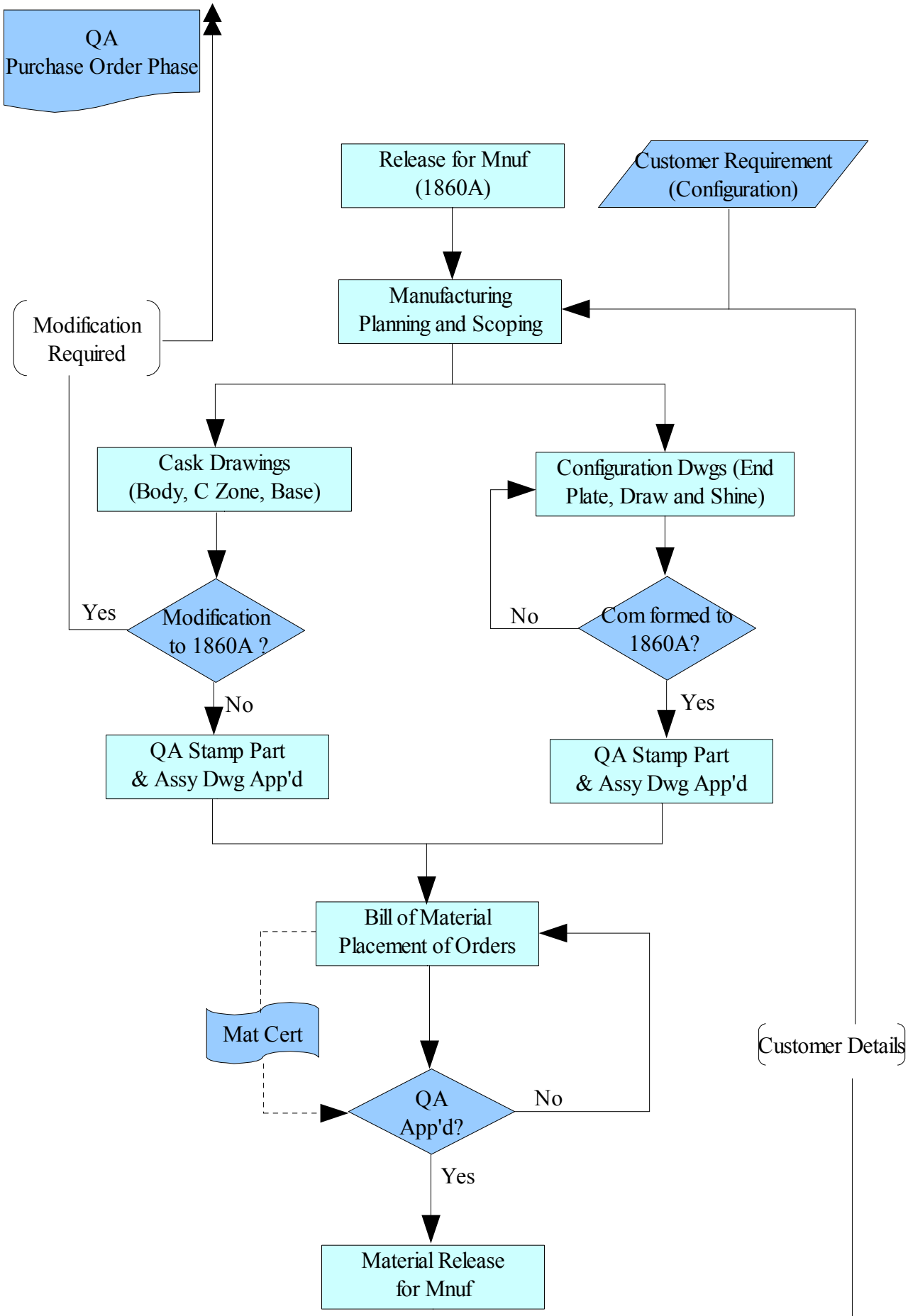
QA
Purchase Order Phase
Release for Mnuf
(1860A)
Customer Requirement
(Configuration)
Manufacturing
Planning and Scoping
Modification
Required
Cask Drawings
(Body, C Zone, Base)
Configuration Dwgs (End
Plate, Draw and Shine)
Yes
Modification
to 1860A ?
No
Com formed to
1860A?
No
Yes
QA Stamp Part
& Assy Dwg App'd
QA Stamp Part
& Assy Dwg App'd
Bill of Material
Placement of Orders
Mat Cert
QA
App'd?
No
Yes
Customer Details
Material Release
for Mnuf

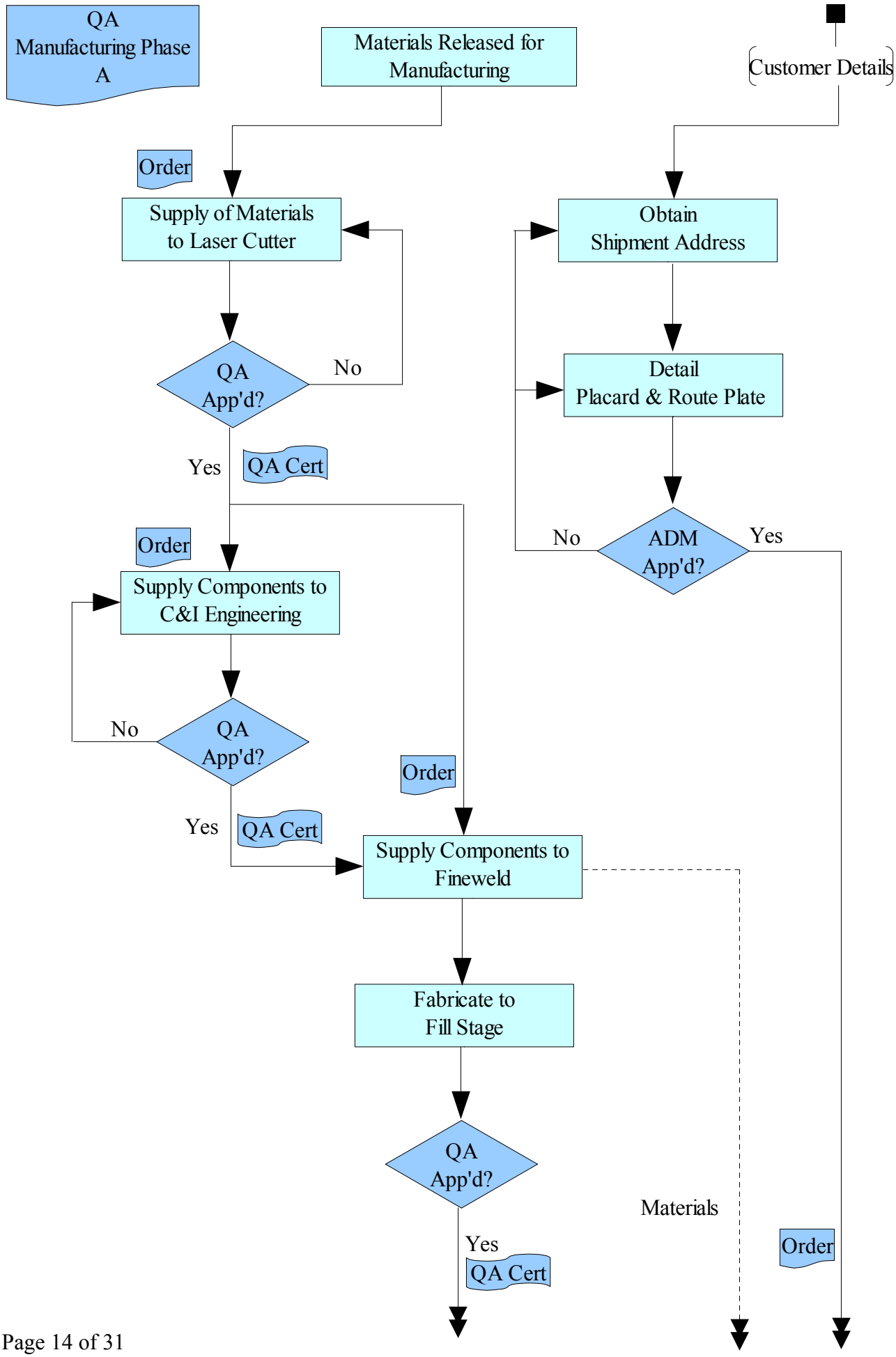
QA
Manufacturing Phase
A
Materials Released for
Manufacturing
Customer Details
Order
Supply of Materials
to Laser Cutter
Obtain
Shipment Address
QA
App'd?
No
Detail
Placard & Route Plate
Yes
QA Cert
Order
Supply Components to
C&I Engineering
No
ADM
App'd?
Yes
No
QA
App'd?
Order
Yes
QA Cert
Supply Components to
Fineweld
Fabricate to
Fill Stage
QA
App'd?
Materials
Yes
QA Cert
Order

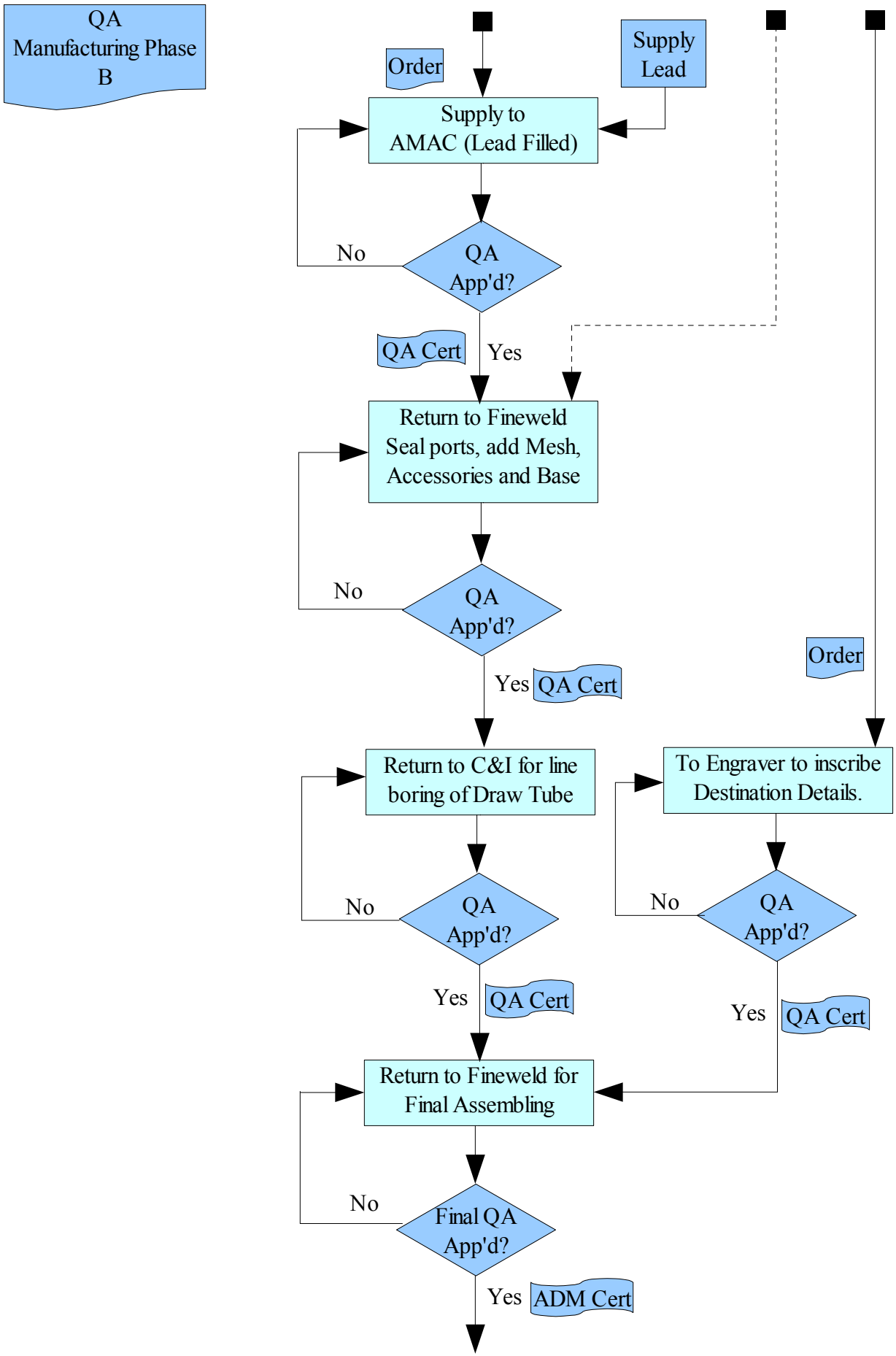
QA
Manufacturing Phase
B
Order
Supply
Lead
Supply to
AMAC (Lead Filled)
No
QA
App'd?
QA Cert
Yes
Return to Fineweld
Seal ports, add Mesh,
Accessories and Base
No
QA
App'd?
Yes
QA Cert
Order
Return to C&I for line
boring of Draw Tube
To Engraver to inscribe
Destination Details.
No
QA
App'd?
No
QA
App'd?
Yes
QA Cert
Yes
QA Cert
Return to Fineweld for
Final Assembling
No
Final QA
App'd?
Yes
ADM Cert

Base Assembly (1860A-01-043)

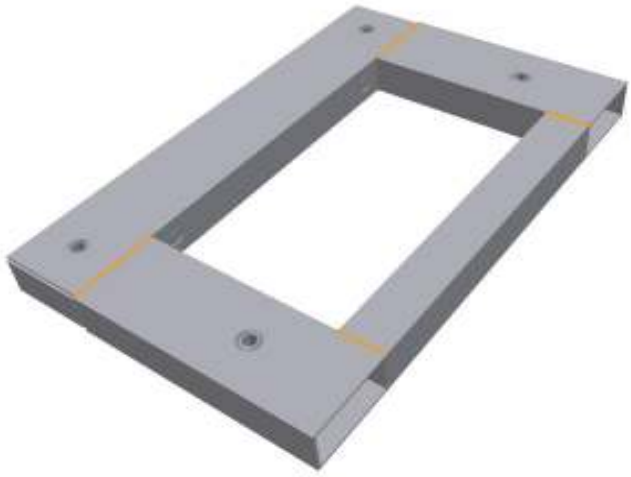

Base Assembly (01-043)

1. Outer base section 1860A-01-343.

   Base skid bolt supports 1860A-01-141

2. Insert base skid bolt supports [2] fully weld (WPS No. 001, 2 mm leg size) both sides and grind off flat.

   Base jack bolt supports 1860A-01-341

3. Insert Base Jack Bolt Supports [4] fully weld (WPS No. 001, 2 mm leg size) both sides grind off flat.

   Base end covers 1860A-01-142

4. Tack base end covers [2].
5. Fully weld (WPS No. 001, 2 mm leg size) and grind off flat.
6. Mark as assembly 1860A-01-048.
7. Transverse base section 1860A-01-144.

   Base skid bolt supports 1860A-01-141

8. Insert base skid bolt support [1] fully weld (WPS No. 001, 2 mm leg size) both sides grind off flat.
9. Mark as assembly 1860A-01-042.
10. Centre base section 1860A-01-145.
11. Tack together assemblies 1860A-01-048 and 1860A-01-042.
12. Check for flatness and squareness.
13. Fully weld (WPS No. 001, 2 mm leg size) and grind off flat.

    Tool box mounting bracket 1860A-01-265

14. Fit tool box mounting bracket fully weld (WPS No. 001, 2 mm leg size), grind off flat top face.

15. Mark as assembly 1860-01-043.

Drawer Tube Assembly (1860A-C1-019)

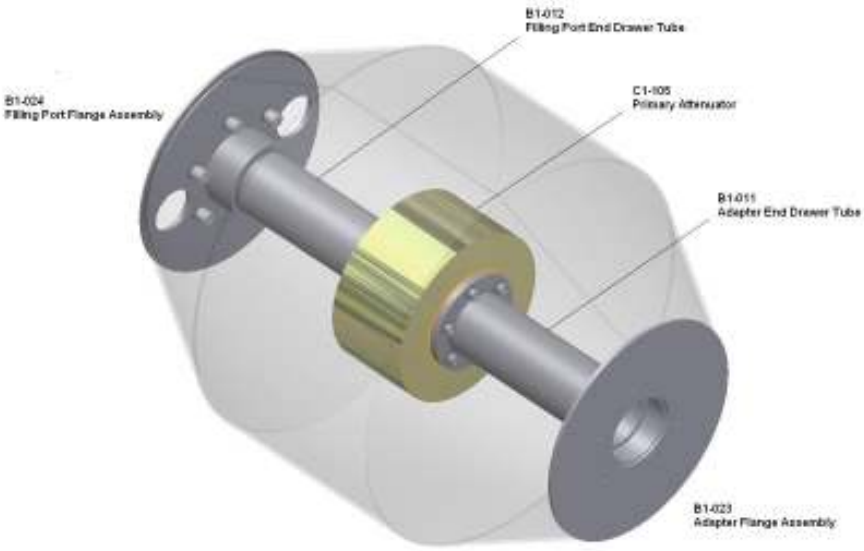

Attenuator Assembly Configuration "C" (1860A-C1-017)

1. Drawer tube 1860A-B1-101.

   Drawer tube flange 1860A-B1-102

2. Fit drawer tube flange (flange end) and tack weld.

   Adapter end sleeve 1860A-B1-103

3. Fit adapter end sleeve (adapter flange end) and tack weld.
4. Check dimensions and weld both ends.
5. Mark as assembly 1860A-B1-011.
6. Drawer tube 1860A-B1-101.

   Drawer tube flange 1860A-B1-102

7. Fit drawer tube flange and tack weld.

   Filling port end sleeve 1860A-B1-104

8. Fit filling port end sleeve (filling port flange end) and tack weld.
9. Check dimensions and weld fully weld (WPS No. 001, 1.5 mm leg size) both ends.
10. Mark as assembly 1860A-B1-012.
11. Bolt assemblies 1860A-B1-011 and 1860A-B1-012 to the primary attenuator 1860A-C1-105 using FA001021 6off each side and torque to 30N/M.
12. Fully weld (WPS No. 001, 1.5 mm leg size) the bolt heads to the flange to create a gas tight join.

13. Mark as assembly 1860A-C1-010.

14. Adapter end flange 1860A-B1-122.

Flange blanks	1860A-01-120

15. Hold flange blanks in counter bore, fully weld (WPS No. 001, 1.5 mm leg size) all round.
16. Repeat for six locations.
17. Mark as assembly 1860A-B1-023.
18. Fit Assembly 1860A-B1-023 to Assembly 1860A-C1-010.
19. Mark as Assembly C1-019.

Filling Port Flange (1680A-B1-024)

1. Filling port flange 1860A-B1-123.

Flange blanks	1860A-01-121

2. Hold flange blanks in counter bore, fully weld (WPS No. 001, 1.5 mm leg size) all round.
3. Repeat for six locations.
4. Mark as assembly 1860A-B1-024.

Top Fin Assembly (1860A-01-039)

1. Top fin 1860A-01-171.
2. using a 22 mm bolt clamp a lifting eye support 1860A-01-180 each side of the fin.
3. Fully weld (WPS No. 001, 3 mm leg size) both sides.
4. Mark as assembly 1860A-01-039.

The Attenuator (1860A-C1-004)

The Attenuator

1. Case centre section 1860A-01-119.
2. Grind ends to create 2 mm chamfer on outer face.
3. Roll the cut sheet until ends meet.
4. Tack weld ends and continue to roll until round.
5. Fully weld (WPS No: 002)
6. Case End Cones 1860A-01-125.
7. Grind ends to create 2 mm chamfer on outer face.
8. Roll the flat cone sheet until ends meet.
9. Tack weld ends and continue to roll until round.
10. Fully weld (WPS No: 002)
11. Align the seams of the three parts of the attenuator case and tack the three parts together, with special attention to the overall length and the end cone faces must be parallel.
12. Check Q.A dimensions and fully weld (WPS No: 002) the two circumferential seams.
13. Mark as assembly 1860A-01-018.

14. Using ring assembly jig 1860A-00-069.
    4 x Centre Shield Inner Ring Section 1860A-01-175
15. Locate ring section onto the ring assembly jig.
16. Fully weld (WPS No: 002) both sides. Clean off welds flat.

17. Mark as assembly 1860A-01-037

4 x Centre Shield Inner Ring Section 1860A-01-176

18. Locate ring section onto the ring assembly jig.
19. Fully weld (WPS No: 002) both sides. Clean off welds flat.
20. Mark as assembly 1860A-01-038

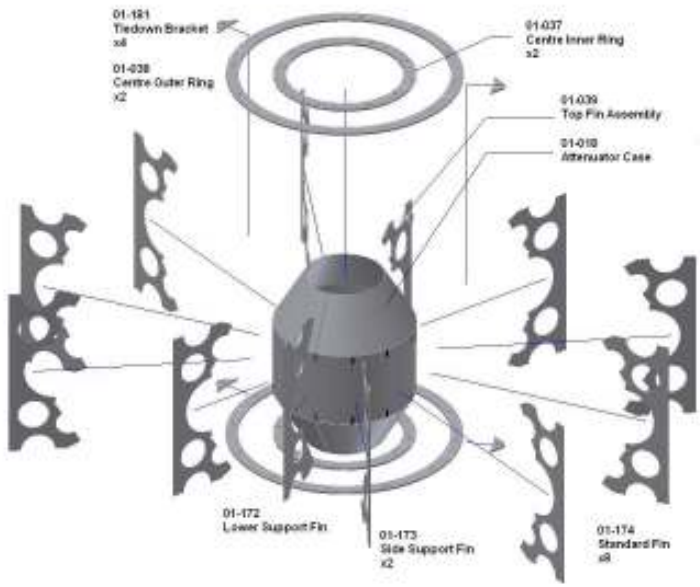

Attenuator Case Assembly

1 x Inner ring 1860A-01-037

1 x Outer ring 1860A-01-038

21. Locate the inner and outer rings onto the assembly jig.
22. Place a 4 mm spacer at the centre and position the attenuator case 1860A-01-018 onto the jig with the seam at the 6 o'clock position.

Lower support fin 1860A-01-172

23. Sit the lower support fin in place over the case seam tack to both Inner and outer rings and the three lower points of contact with the case.

Top fin assembly 1860A-01-039

24. Place the upper fin onto the 12 o'clock position, tack to both Inner and outer rings and the three lower points of contact with the case.

Side support fins 1860A-01-173

25. Place the two side support fins in the 5&7 o'clock positions, tack to both Inner and outer rings and the three lower points of contact with the case.

8 x Standard Fins 1860A-01-174

26. Place the standard fins and tack to both Inner and outer rings and the three lower points of contact with the case in the following sequence 1-11, 3-9, 4-8, 2-10.
27. Remove the assembly.

1 x Inner Ring	1860A-01-037
1 x Outer Ring	1860A-01-038

28. Locate the Inner and outer rings onto the assembly jig.
29. Turn the case over and place the case assembly onto the assembly jig and ensure that all fins are located into their positioning fingers, tack to both inner and outer rings and the three remaining points of contact with the case.
30. Remove the assembly from the jig and check all Q.A dimensions with special attention to the parallel of the end rings.
31. Fully weld (WPS No. 003) the fins one at a time following the fin contact point sequence then the Fin sequence as specified on 1860A-01-220 -03.

Tiedown brackets	1860A-1-181

32. Tack tiedown brackets in place at the 3rd and 10th sector each side.
33. Check alignment and fully weld (WPS No. 002) . Clean off welds flat.
34. Mark as assembly 1860A-C1-006.

Drawer tube assembly	1860A-C1-010

35. Place the adaptor plate end of the drawer tube assembly onto the the assembly jig.
36. Place the attenuator case over the drawer tube assembly.

Filling port flange	1860A-B1-024

37. Place the filling port flange over the drawer tube assembly, push into contact with the attenuator case.
38. Check for even seating at both ends.
39. Check overall length for Q.A dimensions, trim cones for correct seating and length.
40. Tack adaptor flange end to attenuator case
41. Tack filling port flange to attenuator case.
42. Remove the assembly from the jig.
43. Fully weld (WPS No. 002/1) end flanges to attenuator case.

Base Assemblies	1860A-01-043

44. Sit the attenuator lower fin between the two base assemblies with the 5 and 7 o'clock fins touching the base. Clamp the two base assemblies with a pair of sash clamps.
45. Check that the height at both ends of the drawer tube are the same, adjust as necessary and tack weld.

Skid Assemblies	1860A-01-044

46. Bolt on the skid assemblies to ensure correct alignment.
47. Stitch weld 40/40 (WPS No. 001, 2 mm leg size) the central lower fin to the base both sides.
48. Turn over the assembly, stitch weld 40/40 (WPS No. 001, 2 mm leg size) the join between the two base sections and the fin.
49. Turn back over and fully weld (WPS No. 001, 2 mm leg size) the side Support Fins to the base both sides.

Tie Down Strip 1860A-01-179

50. Fit tie down strips, stitch weld 40/40 (WPS No. 001, 2 mm leg size) to outer ring and fins.
51. Check Q.A dimensions.
52. Mark as Assembly 1860A-C1-005

Attenuator Assembly

53. Fill with lead (follow lead pouring procedure) ensure that the sprue is below the rim of the blanking disc recess. Obtain assay of lead quality and confirmation of pour record.

Filling Port Cover 1860A-A1-124

54. Ensure that the filling port cover recess is entirely free from lead, fit the filling port cover, fully weld (WPS No. 001, 2 mm leg size) and clean off flat.
55. Fully weld (WPS No. 001, 2 mm leg size) drawer tube to filling port flange.

56. Inspect all welds, correct where required, clean off all weld splatter.
57. Fit boring bar bearings and boring bar to the end flanges.
58. Set up the cask on the milling table with the boring bar square to the milling head and line bore the drawer tube to size.
59. Remove the boring bar and bearings and face the adaptor plate.
60. Glass bead to an even finish.

Top Mesh 1860A-01-360

61. Tack on top mesh with a wire over the top centre fin (circular wires next to the fins) .
62. Tack circular ends of mesh to fins 2 and 10.
63. Tack longitudinal ends of mesh to tie down strips both sides.

Bottom side mesh 1860A-01-370

64. Slip bottom side mesh into place and tack weld circular ends of mesh to base at the centre.
65. Tack circular ends of mesh to fins 3 and 9.
66. Tack longitudinal ends of mesh to outer ring both sides.
67. Weld all points of contact of the mesh with fins.
68. Weld all points of contact of the mesh with outer ring both sides.
69. Weld all points of contact of the mesh with tie down strips both sides.
70. Glass bead all weld points of contact of the mesh.

Placard base plates 1860A-01-250

71. Fully weld (WPS No. 001, 1.5 mm leg size) engraved Q.A checked placard plates onto sectors 3 and 10, ensure that the serial number as fused into the case is the same as on the placard.

Transport Index Plate 1860A-01-257

72. Weld (WPS No. 001, 1.5 mm leg size) in place transport Index plates in sectors 2 and 11.
73. Mark as assembly 1860A-C1-004.

End Crumple Shields (1860A-01-061)

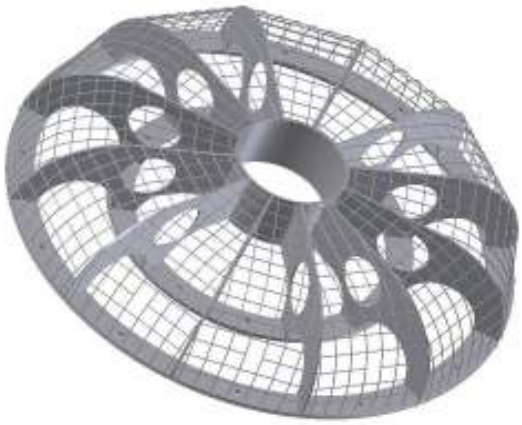

End Crumple Shields (01-061)

1. Using ring assembly jig 1860A-00-072.
2. Place 4 X 1860A-01-197 outer ring sectors on to assembly jig tack weld at both inner and outer edges.
3. Turn the ring over and replace it onto the jig, tack weld at both inner and outer edges.
4. Fully weld (WPS No. 002) all joins both sides.
5. Grind off welds flat.
6. Check the rings for flatness and adjust as necessary.
7. Mark as Assembly 01-068.
8. Place 4 X 1860A-01-196 inner ring sectors on to assembly jig tack weld at both inner and outer edges.
9. Turn the ring over and replace it onto the jig, tack weld at both inner and outer edges.
10. Fully weld (WPS No. 002) all joins both sides.
11. Grind off welds flat.
12. Check the rings for flatness and adjust as necessary.
13. Mark as assembly 01-067.
14. Using end crumple zone assembly jig 1860A-01-071

    End shield tube 1860A-01-191

15. Place fin tube at the centre of the jig.

    Inner ring 1860A-01-067

16. Place the inner ring in place locating it on the 12 ring pins.

Outer ring	1860A-01-068

17. Place the outer ring in place locating it on 12 ring pins.

End fins	1860A- 01-192

18. Insert the 12 end fins into the fin supports.
19. Align the 12 o'clock fin so that it is in contact with inner ring, outer ring the fin tube and are square to the jig.
20. Tack weld to fin tube and both rings.
21. Repeat the procedure with the 6 o'clock fin.
22. Ensure that the two fins are in alignment with each other and central to the fin tube.
23. Repeat the procedure with 3 & 9 o'clock fins.
24. Ensure that the two fins are in alignment with each other and central to the fin tube and square to the 12 & 6 line.
25. Repeat the sequence in the order 1-7, 4-10, 2-8, and 5-11.
26. Fully weld (WPS No. 001, 2 mm leg size) all places on the fin tube in the sequence above.
27. Remove the assembly from the jig.
28. Confirm flatness of the rings .
29. Fully weld (WPS No. 001, 2 mm leg size) all places on the inner ring in the sequence above checking flatness at each stage and adjust sequence if necessary.
30. Fully weld (WPS No. 001, 2 mm leg size) all places on the outer ring in the sequence above,checking flatness at each stage and adjust sequence if necessary.
31. Clean off all welds and splatter.
32. Glass bead to a uniform finish.
33. Mark as assembly 1860A-01-062.
34. Lay the assembly 1860A-01-062 on a Flat surface.
35. Position the end mesh with wires over the 12 to 6 0'clock and 3 to 9 o'clock axes.
36. Tack mesh to fins where there is contact.
37. Cut the mesh to the projected points of contact in the 12-1 sector, bend the mesh to touch the fins. Weld sufficient points of contact to hold shape and tack to the outer ring.
38. Cut the mesh to the projected points of contact in the 6-7 sector, bend the mesh to touch the Fins. Weld sufficient points of contact to hold shape and tack to the outer ring.
39. Repeat the sequence above in the following order 3-4 9-10 2-3 8-9 5-6

11-12 7-8 1-2 4-5 10-11

40. Cut out the mesh round the fin tube, weld all points of contact.
41. Dress the mesh at the outer ring and weld all points of contact.
42. Weld all points of contact between the mesh and the fins.
43. Glass bead all weld points of contact with the mesh.
44. Mark as assembly 1860A-01-061.

End Cap Assembly (1860A-B1-016)

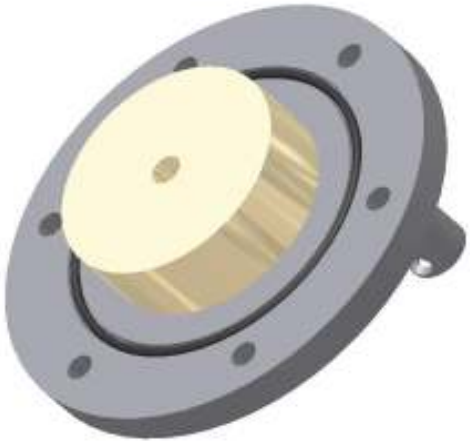

End Cap Assembly (B1-016)

1. End cap flange 1860A-B1-109.

   Locking Sleeve 1860A-01-120

2. Locate locking sleeve into recess on outer face of end cap flange and fully weld (WPS No. 001, 1.5 mm leg size) in place.
3. Mark as assembly 1860A-B1-028.
4. Bolt on shine shield using FA 001017 and torque to 30 Nm.
5. Fill bolt heads with weld (WPS No. 001, 1.5 mm leg size) , grind off flat.
6. Fit "O" rings SE001002 using silicone grease.
7. Mark as assembly 1860A-B1-016.

Final Assembly (1860A-C1-000)

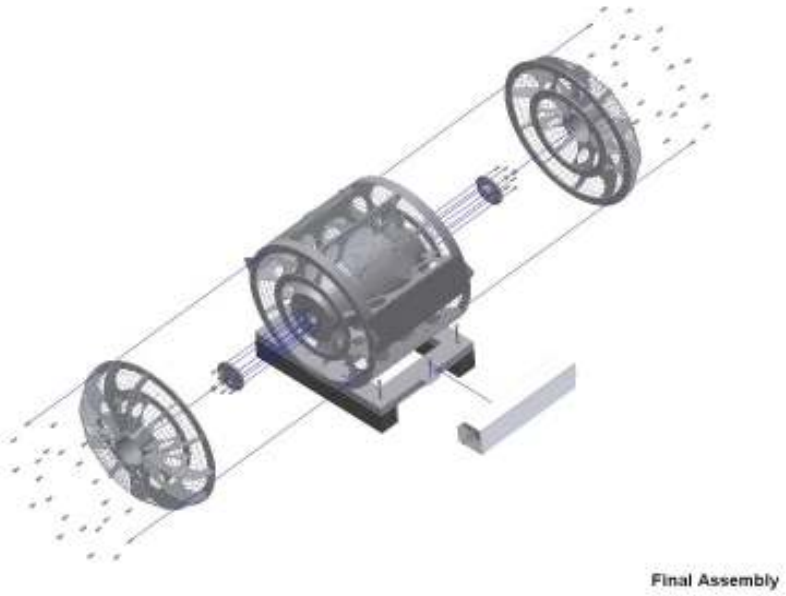

1. Attenuator assembly 1860A-C1-001.
2. Fit end Shields to each end using 48 off bolt part No FA001020 and torque to 30 Nm.
3. Fit tool box 1861-01-000.
4. Fit end cap assembly 1860A-B1-016 using FA001021 and torque to 20 Nm.
5. Fit test port plug 1860A-01-311 each end with copper washer no 1860A-01-313.
6. Fit pad locks.

This page is intentionally left blank