Dominion Energy Kewaunee, Inc.
N490 Highway 42, Kewaunee, WI 54216-9511

Dominion®

Designated Original

January 30, 2009

ATTN: Document Control Desk
U. S. Nuclear Regulatory Commission
Washington, DC 20555-0001

Serial No. 09-058B
LIC/JG/R0
Docket No.: 50-305
License No.: DPR-43

**DOMINION ENERGY KEWAUNEE, INC.**
**KEWAUNEE POWER STATION**
**SUPPLEMENT 2 TO LICENSE AMENDMENT REQUEST 247: EMERGENCY DIESEL GENERATOR FUEL OIL TECHNICAL SPECIFICATION CHANGES**

On January 23, 2009, pursuant to 10 CFR 50.90, Dominion Energy Kewaunee, Inc. (DEK) submitted License Amendment Request (LAR) 247 to Facility Operating License Number DPR-43 for Kewaunee Power Station (KPS) (reference 1). This amendment would permit DEK to modify the KPS Technical Specification (TS) section 3.7.a.7 by revising the required volume of Emergency Diesel Generator (EDG) fuel oil. The proposed change would decrease the required fuel oil volume from a total volume of at least 36,000 gallons to a total volume of at least 32,858 gallons. On January 26, 2009, DEK submitted Supplement 1 to LAR 247 (reference 2), requesting that the Nuclear Regulatory Commission (NRC) review and approve LAR 247 under the rules of 10 CFR 50.91(a)(6), which is applicable to amendments where exigent circumstances exist.

During a telephone conference on January 27, 2009, the NRC staff requested additional information to complete their review of the proposed amendment.

Attachment 1 to this letter provides DEK's response to staff's questions and a supplement to the TS verbiage originally proposed in LAR 247. This change includes a further revision of the proposed TS. The revised TS limit proposed is now a total volume of at least 32,888 gallons. The conclusions of the no significant hazards consideration contained in reference 1 remain unaffected by the changes proposed in this supplement.

The Facility Safety Review Committee has approved the proposed change and a copy of this submittal has been provided to the State of Wisconsin in accordance with 10 CFR 50.91(b).

If you have questions or require additional information, please contact Mr. Craig Sly at 804-273-2784.

A001
NRR

Very truly yours,

Stephen E. Scace
Site Vice President – Kewaunee Power Station

STATE OF WISCONSIN

COUNTY OF KEWAUNEE

The foregoing document was acknowledged before me, in and for the County and State aforesaid, today by Stephen E. Scace, who is Site Vice President of Dominion Energy Kewaunee, Inc. He has affirmed before me that he is duly authorized to execute and file the foregoing document in behalf of that Company, and the statements in the document are true to the best of his knowledge and belief.

Acknowledged before me this 30th day of January, 2009.

My Commission expires: March 28, 2010.

Notary Public

Attachments

1. Discussion of Change and Response to the NRC's Request for Additional Information

Enclosures

1. Marked Up Updated Safety Analysis Report (USAR), page 8.2-17
2. KPS Calculation C10033, "Safeguard's Diesel Fuel Oil Storage Volume Calculation," Revision 1.
3. KPS Emergency Diesel Generator Fuel Oil System Drawings
    a. A-203, "General Arrangement – Turbine and Administrative Building - Basement Floor," revision BC
    b. A-205, "General Arrangement – Turbine and Administrative Building - Mezzanine Floor," Revision AR
    c. E-1622, "Integrated Logic Diagram – Diesel Generator Mech. System," Revision W
    d. M-220, "Flow Diagram – Fuel Oil System," Revision AP
    e. M-271, "Diesel Generator Fuel Oil Piping," Revision Q
    f. M-272, "Diesel Generator Fuel Oil Piping," Revision T

Commitments made by this letter: None

References

1. Letter from Stephen E. Scace (DEK) to Document Control Desk (NRC), "License Amendment Request 247: Emergency Diesel Generator Fuel Oil Technical Specification Changes," dated January 23, 2009.
2. Letter from Stephen E. Scace (DEK) to Document Control Desk (NRC), "Supplement 1 to License Amendment Request 247: Emergency Diesel Generator Fuel Oil Technical Specification Changes," dated January 26, 2009.

cc: Regional Administrator, Region III
U. S. Nuclear Regulatory Commission
2443 Warrenville Road
Suite 210
Lisle, IL 60532-4352

Mr. P. S. Tam
Sr. Project Manager
U.S. Nuclear Regulatory Commission
One White Flint North, Mail Stop O8-H4A
11555 Rockville Pike
Rockville, MD 20852-2738

NRC Senior Resident Inspector
Kewaunee Power Station

Public Service Commission of Wisconsin
Electric Division
P.O. Box 7854
Madison, WI 53707

# ATTACHMENT 1

# SUPPLEMENT 2 TO LICENSE AMENDMENT REQUEST 247: EMERGENCY DIESEL GENERATOR FUEL OIL TECHNICAL SPECIFICATION CHANGES

## DISCUSSION OF CHANGE
## AND
## RESPONSE TO THE NRC'S REQUEST FOR ADDITIONAL INFORMATION

KEWAUNEE POWER STATION
DOMINION ENERGY KEWAUNEE, INC.

## Discussion of Change and Response to the NRC's Request for Additional Information

During a conference call held on January 27, 2009, the Nuclear Regulatory Commission (NRC) staff requested additional information needed to complete their review of LAR 247. Both the questions and DEK's responses are provided below.

### NRC Question 1:

In the proposed Technical Specification (TS) the word "either" is used (fuel oil for either diesel). Provide clarification as to what this means (i.e., whether this means that each underground diesel fuel oil storage tank will be maintained at the stated number of gallons or whether there will be a minimum number of gallons between the two tanks).

### DEK Response

Kewaunee Power Station (KPS) does not currently have a reliable siphon arrangement between the two underground storage tanks. Therefore, the fuel oil volumes of the two storage tanks cannot be credited with combining to form a single volume that could be delivered to either emergency diesel generator (EDG). Each storage tank can only be credited with supplying fuel oil only to its associated EDG. Therefore, each storage tank must be capable of supplying the required volume of fuel oil to its respective EDG.

To clarify the requirement for the current fuel oil storage configuration, the proposed change to TS 3.7.a.7 is being revised to replace the term "either" with "each".

The KPS licensing basis requirement of being capable of supplying fuel oil to one EDG for seven days remains unchanged by this clarification.

The TS is also revised to increase the supply of useable fuel oil by 30 gallons to a total required useable volume of 32,888 gallons. This change was made to account for the increase in volume due to expansion of the fuel oil in the day tanks. This basis for this change is further described in the response to question 5.

The revised proposed change, stated below, replaces the originally proposed change in LAR 247 in its entirety. The description, background, technical analysis, regulatory safety analysis (including the "No Significant Hazards Consideration"), and environmental consideration provided in LAR 247 remain applicable and bounding to this revised change.

**REVISED PROPOSED CHANGE**

The proposed amendment would modify KPS TS 3.7.a.7, "Auxiliary Electrical Systems, Diesel Generators."

The current KPS TS 3.7.a.7 reads as follows:

7. *Both diesel generators are OPERABLE. The two underground storage tanks combine to supply at least 35,000 gallons of fuel oil for either diesel generator and the day tanks for each diesel generator contain at least 1,000 gallons of fuel oil.*

When marked up, modified TS 3.7.a.7 would read as follows:

7. *Both diesel generators are OPERABLE. The ~~two underground storage tanks combine to~~ supply ~~at least 35,000 gallons~~ of useable fuel oil for ~~either~~ each diesel generator is at least 32,888 gallons, including ~~and~~ the day tanks. The day tanks for each diesel generator contain at least 1000 gallons of fuel oil.*

When completed, the modified TS 3.7.a.7 would read as follows:

7. *Both diesel generators are OPERABLE. The supply of useable fuel oil for each diesel generator is at least 32,888 gallons, including the day tanks. The day tanks for each diesel generator contain at least 1000 gallons of fuel oil.*

**NRC Question 2:**

Provide a copy of the proposed revisions to the Updated Safety Analysis Report (USAR) that will reflect the changes in number of gallons required.

**DEK Response**

A markup of the proposed revisions to the Updated Safety Analysis Report (USAR), which will reflect the changes in number of gallons required, is enclosed with this letter.

**NRC Question 3:**

How is the required level in the underground storage tanks administratively controlled (e.g., operator rounds)?

**DEK Response**

Fuel levels in the underground storage tanks are controlled by specifying the minimum required level on operator logs. Fuel oil storage tank levels are checked each shift and actions are specified to restore level to the required value if the minimum values are not met.

The log will specify a minimum volume, (e.g. 33,377 gallons) for each underground storage tank (1,733 gallons of this amount is not usable). The underground storage tank minimum volume is based on maintaining a minimum volume of 1,244 gallons in the associated EDG's day tanks (at the tank's low level alarm setpoint). The day tanks are actually maintained at a higher volume than the 1,244 gallons specified as the low-level alarm setpoint. Level in the day tanks is controlled automatically by refill from the associated underground storage tank. The low-level alarm setpoint would only be reached in the event of an abnormal condition. Administrative controls are specified to restore day tank level, if the low-level alarm setpoint is reached.

An operator-maintained usable volume of 31,644 gallons in an underground storage tank, combined with the administratively maintained volume of 1,244 gallons in the associated day tanks, results in a seven-day supply of fuel oil (32,888 gallons) to the associated EDG, while also ensuring at least 1000 gallons is maintained in the day tanks to satisfy TS requirements.

**NRC Question 4:**

Please provide a copy of the supporting calculation for the revised EDG fuel oil requirements.

**DEK Response**

A copy of the supporting calculation for the revised EDG fuel oil requirements (Calculation C10033) is provided in Enclosure 2.

**NRC Question 5:**

The temperature in the day tank is significantly different than the underground storage tank. How is this temperature difference addressed in the application?

**DEK Response**

Section 6.6 of Calculation C10033 addresses the ability of the day tank to cope with the increase in fuel volume due to thermal expansion. The day tank fuel oil volume

contents will expand by about 19 gallons if temperature increased from 60 F to 110 F if initially at the low level alarm. Conservatively, if the tanks were assumed to be full (1724 gallons rather than 1,272 gallons), the maximum change in volume would be 26 gallons [expansion of 1724 x (0.868/0.855) = 1750 gallons]. To address this potential volume effect on the determination of the volume of fuel oil available, an additional amount of required fuel oil will be added to the Technical Specification limit for conservatism (see the response to question 1).

The day tank low level alarm and fuel oil transfer pump (FOTP) controls utilize float switches. The float switches are set to a particular volume in the tank; therefore, the number of gallons would be unaffected. The level indication used by operations to monitor level in the day tank could be affected by changes in temperature as it is based on pressure (elevation head X density).

The calculation remains conservative in that the difference in level between the low level alarm and the FOTP start switch is 5 inches, or 76 gallons of tank volume. Even if the FOTP switch were at the low end of its calibration (1 inch low), there would still be 60.8 gallons [76 * (4/5)] between the low level alarm and the FOTP start switch setpoint. This is well above the 26-gallon effect that the temperature change could cause (60.8 gallons - 26 gallons = 34.8 gallons of fuel oil above the low level alarm).

**NRC Question 6:**

In section 6.4.2 of the supporting calculation, variable $V_4$ is substituted with the number 38, while section 6.3.2 defines $V_5$ as 3 gallons. This would appear to make $V_4$ equal 33 gallons.

**DEK Response**

The formula listed in the calculation inadvertently omitted a factor. However, the value of $V_{A-D}$ was appropriately calculated using the correct formula. The results are not affected by this condition.

The correct formula should read: $V_{A-D} = [(V_3 + V_4 + V_5) - V_5 - V_{VORTEX-D}] \times 2$

The calculation is being revised to correct this typographical error.

**NRC Question 7:**

Please provide a more detailed description (and drawing) of the diesel fuel oil storage and transfer system that shows interlocks, start and stop levels and pump orientations.

**DEK Response**

The following drawings are enclosed with this letter:

- A-203, "General Arrangement – Turbine and Administrative Building - Basement Floor," revision BC
- A-205, "General Arrangement – Turbine and Administrative Building - Mezzanine Floor," Revision AR
- E-1622, "Integrated Logic Diagram – Diesel Generator Mech. System," Revision W
- M-220, "Flow Diagram – Fuel Oil System," Revision AP
- M-271, "Diesel Generator Fuel Oil Piping," Revision Q
- M-272, "Diesel Generator Fuel Oil Piping," Revision T

Kewaunee has two nominal 850-gallon "day" tanks that are located in enclosures within each diesel generator room (reference drawing A-203, location G-7 and G-9). Two nominal 35,000-gallon underground storage tanks supply fuel oil through immersion pumps to either pair of day tanks (reference drawing A-205, location G-5). A fuel oil transfer pump on each underground storage tank supplies the respective day tanks in the emergency DG Rooms through separate 1-1/2" lines (reference drawing M-220). Each fuel oil transfer pump maintains its associated day tanks at greater than 95% full when in automatic. A fuel supply header with two manual isolation valves can provide a crossover so that either underground storage tank can feed the day tanks for either emergency DG.

To provide fuel oil from the day tanks to the EDG, 1-inch fuel oil supply and return lines from the day tanks are connected at the DG through flexible hose connections. A suction strainer is installed before the DC driven (priming) and the engine driven fuel pump. A 125 VDC priming fuel pump is installed in parallel with an engine driven pump. Unused fuel is recirculated back through the fuel return line to the day tanks.

Control switches are located in the control room on the electrical control console. Controls are provided for each fuel oil transfer pump. The control switch is a four-position PULLOUT/STOP/AUTO/START switch that spring returns to AUTO from the START and STOP positions. EDG transfer pump A also has Control Switches located on the dedicated shutdown panel (DSP). Reference drawing E-1622 for the fuel oil transfer pump operation.

The fuel oil transfer pump can be controlled either manually or automatically. By rotating the STOP/AUTO/START switch to the START position, the associated fuel oil transfer pump starts and continues to run. When the switch is released and spring

returns to the AUTO position, the pump continues to run until the day tank reaches a high-level switch trip point. At the high level trip point (597' 4" elevation) the Fuel Oil Transfer Pump stops. Anytime the switch is rotated to the STOP or PULLOUT position, the pump stops if it has been running. The PULLOUT position is a maintained position and can be used to prevent automatic operation. When the control switch is in the AUTO position, the day tank level switch controls operation of the fuel oil transfer pump. When the day tank level drops below the low setpoint, 596'-10" elevation, the transfer pump starts and continues to run until the oil level in the day tank reaches the upper high-level setpoint, (597'-4") and then it stops.

Each day tank is equipped with level alarm switches that actuate a control room annunciator on abnormal level. The annunciator actuates on a high day tank level when the level reaches 597'-9" while the annunciator actuates on a low level when the level reaches 596'-5".

**NRC Question 8:**

The calculation indicates that the 7 day requirement will be satisfied by storing 1244 gallons in the day tanks. The TS for the day tanks has been left at 1000 gallons. If the combination of day tanks and the underground fuel oil storage tanks (UFOSTs) is allowed to demonstrate the onsite storage capability, then the TS for the day tanks needs to reflect the volume required to maintain 7 day storage (1244 gallons). So the options may be to have UFOST TS at 32,858 gallons and leave the day tank at 1000 gallons, or change both the numbers.

**DEK Response**

Requirements for on-site fuel oil storage capacity for the EDGs at Kewaunee Power Station are derived from the guidelines contained in ANS-59.51 / ANSI N195-1976 section 5.4 and section 6.1. Section 5.4 covers the calculation of on-site fuel oil storage capacity while section 6.1 covers the capacity guidance for day or integral tanks.

Section 5.2 states, in part, that for single unit sites:

> *"The on-site oil storage shall be sufficient to operate the minimum number of diesel-generators following the limiting design basis accident for either seven (7) days, or the time required to replenish the oil from sources outside the plant site following any limiting design-basis event without interrupting the operation of the diesel, whichever is longer."*

Section 5.4 states in part:

> *"A conservative alternative to calculating the total fuel storage based on time-dependent loads is to calculate the storage capacity by assuming that the diesel operates continuously for seven days at its rated capacity."*

Section 6.1 states in part:

> *"Each diesel shall be equipped with day or integral tank or tanks whose capacity is sufficient to maintain at least 60 minutes of operation at the level where oil is automatically added to the day or integral tank or tanks. This capacity shall be based on the fuel consumption at a load of 100% of the continuous rating of the diesel plus a minimum margin of 10%."*

By requiring a day tank volume of 1000 gallons, Kewaunee complies with section 6.1, as stated above and described in Kewaunee License Amendment 83 (reference 1). The combined volume of the day tanks and the storage tank complies with section 5.4. Therefore, no change is needed in required fuel oil volumes.

In addition, see response to Questions 3 and 5.

**NRC Question 9:**

The fuel oil calorific value (BTUs/gal) has been selected from a reference book. However, lab results on fuel with similar specific gravity or API number has shown significantly lower BTUs/gallon. Discuss whether fuel oil samples are tested for BTU content.

**DEK Response**

Testing for heat of combustion (Calorific Value Gross Heat or High Heat Value (HHV)) BTU/Gal of fuel stored in the underground storage tanks is performed in accordance with ASTM D-240 methodology on a quarterly basis with a control range of 137,000 - 143,100 BTU/Gal. Each delivery of new diesel fuel is tested in the same manner. The heat of combustion test is performed at a vendor laboratory with results returned to KPS within a few weeks of the sample date.

**NRC Question 10:**

The fuel consumption rate was based on data that was supplied by the manufacturer for a generic machine. Since there is no margin in the supporting design calculation, discuss whether site-specific consumption rate was evaluated.

**DEK Response**

KPS has not performed testing of the EDGs to develop a site-specific consumption rate for the EDGs. However, in response to this question, DEK did evaluate whether feasible results could be obtained by reviewing data from the last 24-hour test of each EDG.

Data required to perform this estimate included the average kW as well as the corresponding volume of fuel consumed during this period. Average kW values were retrieved for the KPS Plant Information system and fuel volume data was retrieved from the operator logs taken hourly during the 24-hour loaded run. A fuel consumption rate was then calculated based on this information and was compared to an expected consumption rate based on manufacturer data after being corrected for the HHV of the fuel being burned at that time.

The review of the data revealed mixed results. Some information supported a lower consumption rate than the vendor specified value and some data supported a higher consumption rate. These mixed results indicate that the level gauge accuracy in the UFOST does not allow a precise enough measurement to develop a quantitative response to this question. However, when the results were taken collectively (data points averaged together) the analysis showed that the fuel oil consumption rate was near the expected range provided by the manufacturer.

Fuel consumption rates used in calculation C10033 were based on vendor supplied data at various loading levels after being corrected for the lowest allowable HHV for diesel specified for use in the KPS EDGs. Significant margin in the volume of fuel oil required is demonstrated in the KPS response to question 12. Therefore, DEK believes adequate margin exists in the current calculation.

**NRC Question 11:**

ASTM D975 currently allows up to 5% biodiesel in No. 2 fuel oil (B5) without requiring labeling of the blend. Discuss the effects (if any) of using a blend of B5 fuel oil.

**DEK Response**

The supporting calculation did not directly consider biodiesel in EDG fuel oil mix. DEK's purchase specification explicitly prohibits vendors from supplying KPS with any biodiesel. DEK tests fuel received on site for the presence of biodiesel. The test results are obtained several weeks after new fuel is delivered and added to the storage tanks. KPS has never received biodiesel in any fuel shipment received to date.

As stated in the response to question 9, testing of the HHV is also initiated upon each delivery of new fuel. Therefore, any incremental change in high heating value caused by an inadvertent delivery of 5% biodiesel would be identified during initial testing and evaluated if not within the acceptable limits.

**NRC Question 12:**

KPS USAR Table 8.2-1 lists the diesel-generator loads and the times that they will sequence on if required. The maximum connected loads are 3541.1 kW for DG 1A and 3374.7 kW for DG 1B. Table 8.2-1 also gives a time dependent load list, which shows that the highest estimated loads are 2759 and 2776 kW for each respective diesel generator, which occurs at step 9 in the loading sequence. After adding all remaining factors (frequency, voltage, etc. *see note below related to this*), the maximum diesel generator loads are approximately 2848 kW for EDG A and 2854 kW for EDG B. These loads are less than the Continuous +10% overload (for 2 hours in any 24-hour period) rating of 2860 kW for the diesel generators. Operation of the safeguard diesel generators at frequencies other than 60 Hz, as allowed by the governor speed setting, has been shown by calculation to be within the Continuous and Continuous +10% overload (for 2 hours in any 24-hour period) ratings.

A note at the bottom of USAR Table 8.2-1 states:

> Table 8.2-1 totals reflect the improved calculation methods reflected in Reference 11 and include transformer, cable, and overload heater losses, but do not reflect elevated diesel frequency and voltage. Totals for the 60-120 minute time frame are not included because they were not calculated in Reference 11 due to being inconsequential.

In LAR 247, the licensee states the 'conservative alternate method' was used to compute the fuel oil requirements for the EDGs. This method used the nominal rating (2600KW) of the EDG to calculate the 7-day requirement. The licensee further clarifies that this method is conservative as loads such as containment spray (CS) will run for a short duration only. Per the USAR Table, the CS pump and associated valves are rated at 175.2. Removing this load from the postulated steady state load for EDG B (2854KW) yields 2678.8KW load for EDG B.

In view of the fact that the initial loading of the EDG at the onset of an event, coupled with loss of offsite power, is well above the 2600KW rating; and, there is a potential for EDG operation at higher frequencies and higher than nominal rating for an extended duration, please verify that the method used to compute fuel oil consumption is conservative.

**DEK Response**

As the question indicates for a short duration the USAR states that the EDG will be loaded at greater than the continuous duty rating (2600kW) than the fuel consumption calculation assumes. However, as is demonstrated below, this is only for a short duration. The analysis below demonstrates that when the full 7 days of operation of the EDG is considered the continuous duty rating is a bounding conservative value for demonstrating adequate fuel oil inventory.

DEK has a calculation for EDG post-accident loading for a duration of 240 minutes (4 hours). This calculation yields the results presented in the following table. This calculation is considered a worst-case EDG loading for a design bases accident. The bounding values at various time steps are presented below:

| KW Total | Step 10 | T=30 | T=60 | T=240 |
|---|---|---|---|---|
| EDG A | 2843.41 | 2844.84 | 2673.13 | 2038.04 |
| EDG B | 2849.93 | 2848.17 | 2677.51 | 2009.39 |

From the table, it can be seen that 2860 kW is a bounding value for the electrical loading for the first hour of the event, 2680 kW will bound hours 2-4 of the event, and 2040 kW will bound the remainder of the 7-days after initiation of the event.

If the ANSI N195-1976 prescribed time dependence method of calculating fuel oil requirement for a diesel generator is used, the following results are achieved (NOTE: all values for fuel consumption rates and HHV for loadings are derived from data available in C10033, provided in Enclosure 2):

First Hour consumption: The estimate for the first hour of the event, determined that 2860 kW will bound the EDG loading and the associated fuel consumption rate is 0.0747 gal/kW hr as specified in section 6.5.2 of calculation C10033. The volume of fuel required for the first hour is estimated to be 214 gallons.

Hours 2 – 4 consumption: For hours 2 - 4, 2680 kW will bound the EDG loading and a fuel consumption rate of 0.07452 gal/kW hr was derived from a best fit curve of the fuel consumption vendor data included in attachment 4 of calculation C10033. For hours 2-4 the volume fuel required is estimated to be 599 gallons.

Hours 5 – 168 consumption: For the remaining 164 hours, 2040 kW will bound the EDG loading and a fuel consumption rate of 0.07565 gal/kW hr was derived from the best fit curve of the fuel consumption vendor data included in attachment 4 of calculation C10033. The volume required for the remaining 164 hours is estimated to be 25,310 gallons.

Total consumption: Adding the values for the respective time increments above yields the total volume required for 7-days of operation to be 26,123 gallons. After adding a 272-gallon allowance for testing, and applying a 10 percent margin to the entire volume (as required by section 5.4 of ANSI N195), yields a final volume requirement of 29,035 gallons.

This value is 3823 gallons less than was specified in calculation C10033. This additional 3823 gallons represents over 24 additional hours of operation at the 2040 kW loading rate for a total available stored volume of over 8-days for EDG operation. Therefore, the calculation provided is considered conservative and bounding.

References:

1. Letter from Anthony T. Gody (NRC) to Ken H. Evers (WPSC), "Amendment NO. 83 to facility Operating License NO. DPR-43 (TAC NO. 73582)," dated October 25, 1989

# ENCLOSURE 1

# SUPPLEMENT 2 TO LICENSE AMENDMENT REQUEST 247: EMERGENCY DIESEL GENERATOR FUEL OIL TECHNICAL SPECIFICATION CHANGES

## MARKED UP UPDATED SAFETY ANALYSIS REPORT (FOR INFORMATION)

KEWAUNEE POWER STATION
DOMINION ENERGY KEWAUNEE, INC.

4. Response of the air receiver pressure switches can be tested and calibrated by valving in the standby air receivers, valving out the on-line receivers, opening the air compressor circuit breaker, and opening the receiver drain valve until an alarm occurs on the local and Control Room annunciators.

The motor-driven compressor associated with each diesel is fed from the emergency bus supplied from the same diesel. The control voltage for each diesel starting system is from its associated 125V dc station battery.

An audible and visual alarm system is located in the control room and will alarm off-normal conditions of jacket water temperature, lube oil temperature, fuel oil level, starting air pressure and Diesel Generator Stator Hi Temperature (1 of 12 inputs feeding the 4160 Volt Stator Temperature Hot annunciator). An alarm also sounds if a starting circuit is locked out, a control switch is not in "auto" position, or dc power for the controls at the diesel generator is lost. The alarm in the control room also alerts the operator to other various off-normal conditions including jacket water expansion tank level and pressure, engine crankcase pressure, and fuel oil pressure. Local audio and visual alarms are also provided at each diesel generator.

Reference 2 is a safety evaluation in which the NRC has concluded that, based on the review of submitted information and on-site inspections, the status annunciators for the diesel generators are acceptable. The review was specifically intended to ensure that any deliberately induced condition which may disable the diesel generators, and which is expected to occur more frequently than once per year, is automatically annunciated in the Control Room with devices worded to alert the operator of their abnormal status.

Two 850-gallon "day" tanks are located in enclosures within each diesel generator room. The two tanks provide capacity for approximately four hours operation for one generator at full load. Two 35,000-gallon underground storage tanks supply fuel oil through immersion pumps to either pair of day tanks. The ~~combined~~ usable amount of fuel ~~oil~~ oil, available for each diesel generator, contained in the~~both~~ storage tanks and one set of day tanks would provide a minimum of 7 days fuel supply ~~for one diesel generator~~, thus assuring adequate time to restore off-site power or to replenish fuel. Minimum calculated usable volume was determined to be 32,858 gallons, which provides for a 7-day fuel supply plus a monthly surveillance run. An additional 30 gallons is added to the usable volume to account for thermal expansion in the day tanks due to the temperature difference from the underground fuel oil storage tank to the day tanks. The diesel fuel oil storage capacity requirements are consistent with those specified in ANSI N195-1976/ANS-59.51, Section 5.2, 5.4 and 6.1. See Reference 3 and Technical Specification 3.7 for fuel oil storage requirements

# ENCLOSURE 2

# SUPPLEMENT 2 TO LICENSE AMENDMENT REQUEST 247: EMERGENCY DIESEL GENERATOR FUEL OIL TECHNICAL SPECIFICATION CHANGES

## CALCULATION C10033

KEWAUNEE POWER STATION
DOMINION ENERGY KEWAUNEE, INC.

Dominion™

# Calculation Cover Sheet



| Calculation Number: C10033 | Revision: 1 | Addendum: |
|---|---|---|

Calculation Quality Class: ☒ Safety Related ☐ Non-Safety Related

Installation Verification Required? ☐ Yes ☒ No

Subject (Calculation Title):
Safeguard's Diesel Fuel Oil Storage Volume Calculation

| Station(s) and Unit(s): | Affected System(s), Structure (s), or Component(s): |
|---|---|
| KPS 1 | Emergency Diesel Generator Fuel Oil Storage Tanks 1A & 1B, Diesel Generator Fuel Oil Day Tank 1A1, 1A2 and 1B1, 1B2 |

Objectives:
To determine:

The available fuel oil storage volume for each Safeguards Diesel

The available fuel oil storage volume in each Underground Fuel Oil Storage Tank

The available fuel oil storage volume in each Day Tank component

The required fuel oil storage volume for a 7-day (168-hour) run continuously loaded @ 2,600 kW

The required fuel oil storage volume for testing requirements

In response to:

CA029757 – "Calculation C10033 requires Revision Based on Current EDG Loads"

CA032295 – "NRC EN 42242 – Unanalyzed Condition Related to Emergency Diesel Fuel Oil Tank"

CA032422 – "Include ULSD fuel properties in C10033 Revision (being revised per CA029757)"

| Originator: Printed name and signature: | Date: |
|---|---|
| C. N. Hughes | 5/13/2008 |
| Reviewer: Printed name and signature: | Date: |
| B. F. DeMars | 5/13/2008 |
| Approval: Printed name and signature: | Date: |
| MICHAEL ROSSEAU | 1/16/09 |

## 1.0 PURPOSE

Determine:

The available fuel oil storage volume in each Underground Fuel Oil Storage Tank

The available fuel oil storage volume in each Day Tank component

The available fuel oil storage volume for each Safeguards Diesel

The required fuel oil storage volume for a 7-day (168-hour) run continuously loaded @ 2,600 kW

The required fuel oil storage volume for testing requirements

### 1.1 Corrective Action (CA) Response:

1.1.1 Regarding CA029757:

Section 1, Activity Requested:

> "*...revise [C10033] based on the continuous load rating determined for the most limiting EDG.*"

This calculation will determine the required oil storage volume for a 7 day (168 hour) run @ 2,600 kW. 2,600 kW is the continuous load rating for the EDG (Section 6.5.3).

1.1.2 Regarding CA032295:

Section 1, One Line Description:

> "*Include ULSD fuel properties in C10033 Revision....*"

This calculation will determine the available fuel oil storage volume for each Safeguards Diesel based on Ultra Low Sulfur Diesel (ULSD) parameters (Section 6.5.1).

1.1.3 Regarding CA032422:

Section 1, Activity Requested:

> "*...update [C10033] Rev. 0 to meet current standards and to include a specific discussion/disposition of the potential for vortexing...*"

This calculation will determine the available fuel oil storage volume for each Safeguards Diesel accounting for vortexing (Section 6.3.3).

### 1.2 Discussion:

This Calculation will determine the available fuel oil to one Emergency Diesel Generator (EDG) from one Underground Fuel Oil Storage tank (UFOST) and one Day Tank via the associated Fuel Oil Transfer Pump (FOTP). It is noted here that

there are two physical tanks that comprise the Day Tank Component. KPS Drawing M-271 (Reference 4) shows a typical lineup/physical configuration. The sketch below is intended for ease of the reviewer and is Not To Scale (NTS).

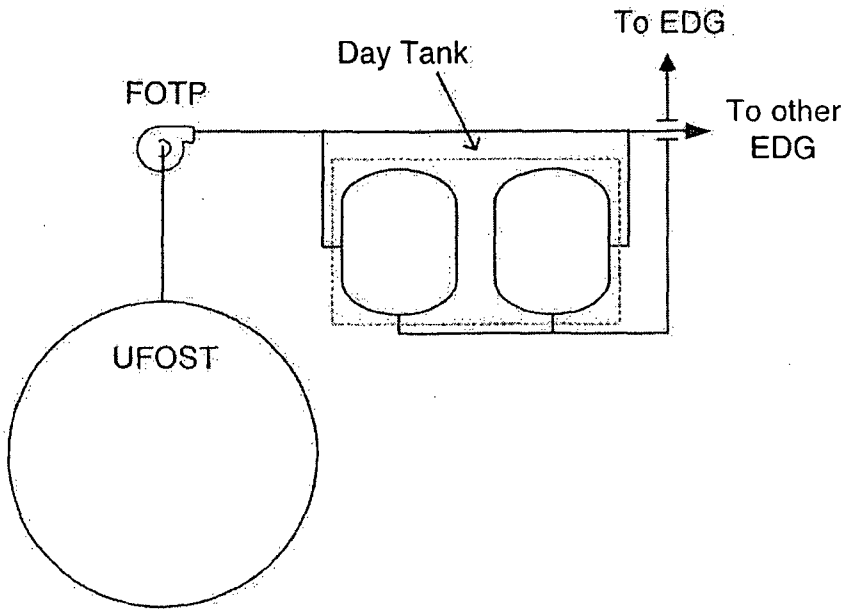


## 2.0 REFERENCES

1. Regulatory Guide 1.137, Fuel Oil Systems for Standby Diesel Generators, Rev. 1, dated October 1979.
2. ANSI N195-1976, Fuel Oil Systems for Standby Diesel Generators; Sections 5.2, 5.4 and 6.1.
3. Operations M-220, Flow Diagram, Fuel Oil Systems, Rev. 0AN.
4. M-271, Diesel Generator Fuel Oil Piping, Sheet 1, Rev. 00Q.
5. M-272, Diesel Generator Fuel Oil Piping, Sheet 1, Rev. 00T.
6. DELETED
7. E-1622, Integrated Logic Diagram Diesel Generator Mechanical System, Rev. W.
8. X-K193-1, Fuel Oil Storage Tank, Sheet 1, Rev. 002A.
9. X-K275-1, Fuel Oil Day Tank, Sheet 1, Rev. 3.
10. X-K208-1, Gasoline (F.O. x-fer) Pump Installation, Rev. 0.
11. **SP-10-179**, Diesel Generator Fuel Oil Day Tanks 1B1/1B2 Differential Pressure Indicator and Level Switches Calibration, Revision 16 (P) and **SP-10-181**, Diesel Generator Fuel Oil Day Tanks 1A1/1A2 Differential Pressure Indicator and Level Switches Calibration, Revision 20 (T).

12. Pressure Vessel handbook, Fourth Edition, by Eugene F. Megyesy.
13. Mark's Standard Handbook for ME's, Eighth Edition.
14. USAR, Revision 20, updated online 12/28/07.
15. DELETED
16. Telefax to Don Norwick Western Engine, from Randy Sowa, EMD, regarding fuel consumption rates, dated 7-19-88 (Attachment 4)
17. SP-10-225, Diesel Fuel Oil Sampling, Rev. 23, Dated 2-12-2008.
18. Technical Specification T.S.4.6, Periodic Testing of Emergency Power Systems, page TS 4.6-1, Amendment #194, dated 2/7/2008 and page TS 4.6-2 Amendment #191, dated 5/1/2007.
19. Crane Technical Paper No. 410, Flow of Fluids, 23rd printing, 1986
20. Technical Specification T.S.3.7, Auxiliary Electrical Systems, page TS 3.7-1, Amendment #122, dated 12-21-1995.
21. P.O. 275, Specification SS-M275, Sheet 1 of 4, Rev. 7/70
22. NRC Information Notice 2006-22, "New Ultra-Low-Sulfur Diesel Fuel Oil Could Adversely Impact Diesel Engine Performance", October 12, 2006.
23. IEN Engineering Paper, "Potential Affects of Use of Ultra Low Sulfur Diesel Fuel Oil on Engine Fuel Oil Consumption", Rev. 1, May 11, 2007.
24. ANSI/HI 9.8, "Pump Intake Design", 1998.
25. P.O. K-208, Purchase Order for Fuel Oil Pumps, Dated 5-13-1969 (Attachment 7).
26. EMD Fuel Oil Chart, Document no. 9068-ES, Appendix 2. (Attachment 5).
27. ASHRAE Applications Handbook, 2003 edition.
28. S-529, Turbine and Administration BLDG. Area Miscellaneous Details, Sheet 1, Revision 00F.
29. A-202-3, Underground Electrical Services Magnified, Sheet 1, Revision 00F.
30. Revision Tracking and Processing Record "Loading Diesel Generator Fuel Oil" Dated 7-30-97.
31. IEEE Standard 387-1977 "Criteria for Diesel-Generator Units Applied as Standby Power Supplies for Nuclear Power Generating Stations."

## 3.0 DESIGN INPUTS

### 3.1 Generator Ratings (Reference 14):

| | |
|---|---|
| Continuous | 2600 kW |
| Short Time Rating* (110%) | 2860 kW |

*Reference 31

### 3.2 Fuel consumption rates (Reference 16) based on the Higher Heating Values (HHV), 19450 Btu/lb:

| | |
|---|---|
| 1,250 kW | 0.595 lb/kW·hr |
| 2600 kW | 0.525 lb/kW·hr |
| 2860 kW | 0.526 lb/kW·hr |

### 3.3 Fuel Oil Minimum acceptable HHV (Reference 17 & Attachment 8):

137,000 (Normal control range 137,000 – 143,100)

### 3.4 Testing Requirements:

- Per Section a.1 of the Technical Specification 4.6 (Reference 18):

  *"Monthly each diesel generator shall be tested by:*

  *A. Manually starting each diesel generator from a standby condition verifying that each diesel generator achieves steady state voltage and frequency.*

  *B. Loading the diesel generator to at least 2600 kW (nominal) for a period of at least 1 hour."*

- Per Section a.5 of Technical Specification 4.6:

  *"Each diesel generator shall be operated for ≥24 hours every operating cycle:*

  *A. For ≥2 hours loaded to 2860 kW (nominal) and,*

  *B. For the remaining hours of the test loaded to 2700 kW (nominal)."*

  For conservatism, 24 hours @ 2,860 kW will be used.

### 3.5 Volume Requirements:

Per Section a.7 of the Technical Specification 3.7 (Reference 20):

> "*...The two underground storage tanks combine to supply at least 35,000 gallons of fuel oil for either diesel generator and the day tanks for each diesel generator contain at least 1,000 gallons of fuel oil.*"

### 3.6 Underground Fuel Oil Storage Tank Dimensions (Reference 8):

| Dimension | Value |
|---|---|
| Outside Diameter | 12 ft |
| Shell thickness | 7/16 in |
| Tank length | 42 ft |

### 3.7 Fuel Oil Transfer Pump (Reference 10):

| Dimension | Value |
|---|---|
| Distance from tank bottom to pump suction | 3 in |
| Pump Capacity | 30 gpm (Reference 25) |

### 3.8 Day Tank Dimensions (Reference 9):

| Dimension | Value |
|---|---|
| Outside Diameter (OD) | 48 in |
| Shell thickness | 5/16 in |
| Head thickness | ¼ in |
| Overall length | 10 ft |
| Height of suction pipe in tank | 3 in |
| Day Tank low level alarm | 596 ft 5 in (Reference 11) |
| Day Tank pump start elevation | 596 ft 10 in (Reference 11) |
| Day Tank pump stop elevation | 597 ft 4 in (Reference 11) |

## 4.0 ASSUMPTIONS

### 4.1 Fuel Oil Temperature

Page 32.19 of the ASHRAE Applications Handbook (Reference 27) shows the approximate groundwater temperatures of the continental United States in map form (Attachment 6). From this map, the groundwater temperature around KPS is shown to be 50° F.

KPS Drawings M-271 (Reference 4), S-529 (Reference 28), and A-202-3 (Reference 29) show:

- The UFOST's are in direct contact with the earth at a minimum of 3.5 feet below grade.
- The distance between the Turbine Building and the closest UFOST is ~9 feet (through the earth).
- The distance between the diesel generator 1B room wall and the UFOST is ~16 feet (through the earth).

Credit for available fuel oil in the Day Tanks (combined) is only taken for the volume below the Low Level Alarm (LLA). Reference 5 demonstrates that the Day Tank level is controlled (via the FOTP) between 5 and 11 inches above the LLA. It is assumed that the 5 inch volume of fuel above the LLA will compensate for any difference in temperature (and subsequent changes in density and volume) between the fuel oil in the UFOST's and the Day Tanks. Analysis of this assumption is in Section 6.6.

**The maximum temperature of fuel oil in the UFOST is assumed to be 60° F.**

### 4.2 Uncertainties

Dominion uses four standard parameters when accounting for instrument uncertainties and errors; Indicator, Maintenance and Testing Equipment (M & TE), Indicator/Sensor Drift, and Rack Readability.

Values for these parameters for the measuring equipment for the UFOST's are not known as of publication of this document, and as such, standard values as supplied by Nuclear Design Instrumentation and Control Engineering, will be used as follows:

| | |
|---|---|
| Indicator | 1.0% |
| M & TE | 0.5% |
| Sensor Drift | 0.5% |
| Rack Readability | 0.3% |

Dominion regularly employs a Root Sum of the Squares method for applying multiple errors.

$$\text{Total Error} = \sqrt{(1.0+0.5)^2 + (0.5)^2 + (0.3)^2} = 1.61\%$$

Note that uncertainty errors are not accounted for in the Day Tank volume calculation, since allowances for its volume are taken due to the use of the lower calibration limit of the LLA. For further information, see Section 6.3.4 below.

**The instrument uncertainties for the UFOST are assumed to be 1.61%.**

4.3 Pump Inlet Diameter

KPS Drawing X-K208-1 (Reference 10) shows the FOTP pump inlet holes to be 1 3/8 (1.375) in. in diameter. Three of these holes are shown on an elevation view on the drawing.

**The total number of inlet holes is assumed to be six.**

4.4 Day Tank Head Diameter and resulting Volume

The vessel heads on the Day Tanks are ASME dished heads. For the purpose of determining the volume in the heads, the Inside Diameter (ID) is assumed to be equal to the Outside Diameter (OD). For further information, see Sections 6.2.2 and 6.2.3 below.

**The Day Tank heads ID is assumed to be equal to the OD (48 inches).**

## 5.0 METHODOLOGY

As described in each section.

## 6.0 CALCULATION

### 6.1 Tank Information

6.1.1 Storage Tank Inputs:

Storage Tank Sketch

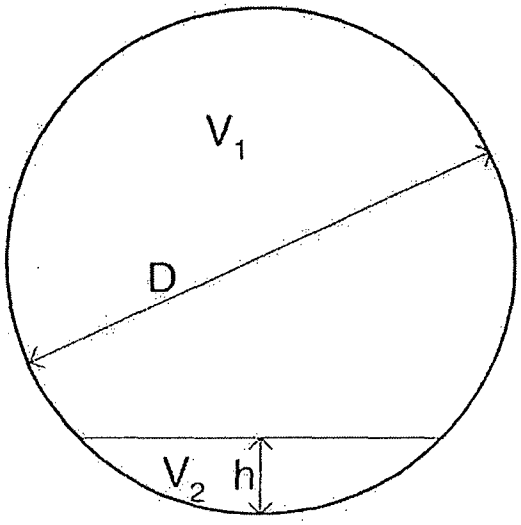


From Reference 8:

$$D = 12.00\text{ft} - 2\left(\frac{7}{16}\text{in. x}\frac{1\text{ ft}}{12\text{ in.}}\right) = 11.92\text{ft}$$

$$L = 42.00\text{ft} - 2\left(\frac{7}{16}\text{in. x}\frac{1\text{ ft}}{12\text{ in.}}\right) = 41.92\text{ft}$$

From Reference 10:

$$h = \left(3\text{in} + 1\frac{3}{8}\text{in}\right)\text{x}\frac{1\text{ ft}}{12\text{ in.}} = 0.364\text{ft}$$

6.1.2 Day Tank Inputs (2 per Diesel):

Day Tank Sketch (2 per Diesel)

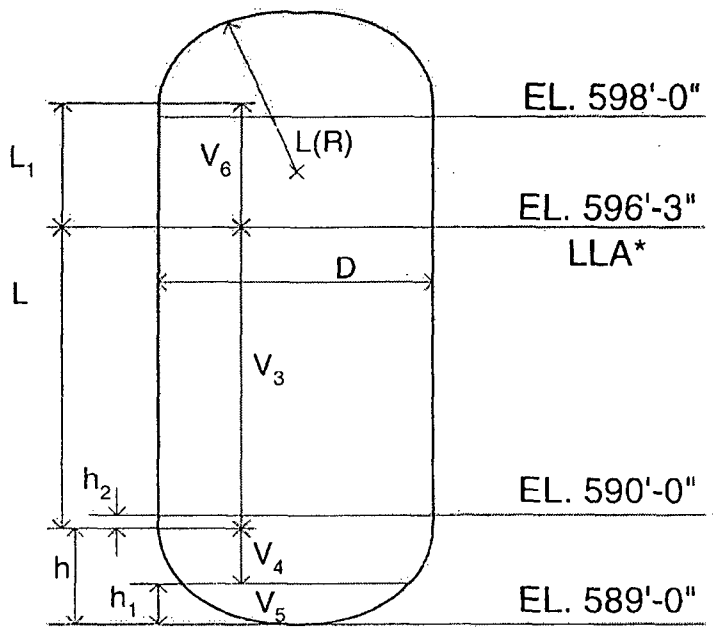


Head Thickness = 1/4"

| | | |
|---|---|---|
| *LLA Setpoint: | El. 596'-5" | (Reference 7) |
| Calibration Accuracy: | ±2" | (Reference 11) |

The LLA low setpoint per calibration tolerance is 596' 3". For conservatism, this value will be used as the LLA setpoint.

NOTE: Per Attachment 9, the two most recent calibration checks on the Day Tanks LLA (component numbers 16635 and 16637), have had no required adjustment to the 'As Found' setting. Therefore, the measurement uncertainty for the Day Tank used in this document has been shown to be accurate.

$$D = 4.00\text{ft} - 2\left(\frac{5}{16} \text{x} \frac{1\text{ ft}}{12\text{ in.}}\right) = 3.94\text{ft}$$ (Reference 9)

$$h = 8\text{in}; L(R) = 42\text{in}$$ (Reference 12, Attachment #1, p. 293 & 294)

$$h_2 = \left(12\text{in} - \frac{1}{4}\text{in} - 8\text{in}\right) \text{x} \frac{1\text{ ft}}{12\text{ in.}} = 0.31\text{ft}$$ (Reference 9)

$$h_1 = 3in = 0.25ft$$ (Reference 9)

$L = 596.25\,ft - 590.00\,ft + 0.31\,ft = 6.56\,ft$

$L_1 = 598.00\,ft - 596.25\,ft + 0.31\,ft = 2.06\,ft$

## 6.2 Fuel Oil Storage Volume (V)

$$V = UFOST + (2 \text{ x Day Tank}) = V_1 + 2 \text{ x } (V_3 + V_4 + V_5)$$

6.2.1 Calculating the Capacity of the UFOST:

$$(V_1 + V_2) = \left(\frac{\pi}{4} D^2 \text{ x } L\right) = \left[\frac{\pi}{4}(11.92)^2(41.92)\right] ft^3 \text{ x } 7.480 \frac{gal}{ft^3} = \underline{\underline{34{,}992 \text{ gallons}}}$$

6.2.2 Calculating the Capacity of the Day Tank @ the LLA:

$$[V_3 + (V_4 + V_5)] \text{ x } 2$$

$$V_3 = \left(\frac{1}{4}\pi D^2 x L\right) = \left[\frac{\pi}{4}(3.94)^2(6.56)\right] ft^3 x 7.480 \frac{gal}{ft^3} = 598 \text{ gallons}$$

From the table on Page 2 of 2, Attachment #3 and Assumption 4.4:

$$(V_4 + V_5) = 38 \text{ gallons}$$

$$[V_3 + (V_4 + V_5)] \text{ x } 2 = (598 + 38) \text{ x } 2 = \underline{1{,}272 \text{ gallons}}$$

6.2.3 Calculating the Total Capacity of the Day Tank:

$$\{V_3 + V_6 + [(V_4 + V_5) \text{ x } 2]\} \text{ x } 2$$

$$V_6 = \left(\frac{\pi}{4} D^2 \text{ x } L\right) = \left[\frac{\pi}{4}(3.94)^2(2.06)\right] ft^3 \text{ x } 7.480 \frac{gal}{ft^3} = 187.8; 188 \text{ gallons}$$

$$[598 + 188 + (38 \text{ x } 2)] = 862 \text{ gallons}$$

NOTE: This value compares favorably with the value (850 gallons) stated on References 3 and 21. Therefore, Assumption 4.4 is considered valid.

$$[598 + 188 + (38 \text{ x } 2)] \text{ x } 2 = \underline{1{,}724 \text{ gallons}}$$

### 6.3 Unavailable Fuel Oil Storage Volumes ($V_U$):

NOTE: $V_2$ and $V_5$ account for fuel volume lost due to suction pipe placement at the bottom of the respective tanks and are treated as unavailable volumes.

6.3.1 Calculating $V_2$ using Reference 12, page 368 (Attachment 2):

$$\frac{h}{D} = \frac{0.364\ \text{ft}}{11.92\ \text{ft}} = 0.031;$$

From Coefficient Table (Attachment 2), 0.031 yields 0.009179

$$V_2 = (V_1 + V_2) \text{ x Coefficient}$$

$$V_2 = 34{,}992 \times 0.009179 = \underline{\underline{321\ \text{gallons}}}$$

6.3.2 Calculating $V_5$ using Reference 13, page 2-13:

$$V_5 = \frac{1}{3}\pi h_1^2 (3r - h_1), \text{ where r = L(R)}$$

$$V_5 = \left[\frac{\pi}{3}(0.25)^2\left(3\text{x}\frac{42}{12} - 0.25\right)\right]\text{ft}^3\text{x}7.48\frac{\text{gal}}{\text{ft}^3} = \underline{\underline{5\ \text{gallons}}}$$

6.3.3 Calculating the unavailable volume due to Vortex Prevention

A. Calculating the Required Submergence to Prevent Vortices in the UFOST ($V_{VORTEX\text{-}U}$):

Drawing XK-193-1 (Reference 8) shows stiffening plates for rotational guidance at the suction of the FOTP. These plates extend ~1 ft above the suction of the FOTP and taper from 9 in. wide at the tank bottom to ~1.5 in at their top. These plates will provide unintentional vortex suppression above the pump inlet; however, no credit is taken for the plates. This ensures that this determination will provide sufficient depth for vortex suppression.

This section calculates the minimum submergence of the pump intake to reduce the probability that strong free-surface air core vortices will occur. The method and formulas used are described in ANSI/HI 9.8 (Reference 24).

The formula for calculating the submergence depth is:

$$S = D + 0.574\frac{Q}{D^{1.5}}$$

Where:

D = Diameter of the pump inlet (inches)

Q = Flowrate through the pump (gpm)

1. Calculating D:

   D is the equivalent diameter for the aggregate area of the Pump Inlet ($D_E$). The aggregate area of the pump inlet is found by:

$$A_A = \left[\left(\pi/4\right) \times D^2\right] \times 6 \qquad A_A = \left[\left(\pi/4\right) \times 1.375^2\right] \times 6 = 8.909 \text{ in}^2$$

D = 1.375 per Assumption 4.3

$$D_E = \sqrt{\frac{A_A \times 4}{\pi}} \qquad D_E = \sqrt{\frac{8.909 \times 4}{\pi}} = 3.368 \text{ in}$$

2. Calculating the Submergence ($S_U$):

$$S_U = 3.368 \text{ in} + 0.574 \frac{30 \text{ gpm}}{3.368^{1.5} \text{ in}} = 6.154 \text{ in} = 0.513 \text{ ft}$$

3. Calculating the Unavailable Volume of Fuel Oil Due to the Submergence Using Reference 12, page 368 (Attachment 2):

   Using the h/d method as described in Reference 12:

$$h = 0.364 \text{ ft} + 0.513 \text{ ft} = 0.877 \text{ ft}$$

$$\frac{h}{D} = \frac{0.877 \text{ ft}}{11.92 \text{ ft}} = 0.074$$

   From Coefficient Table (Attachment 2):

   0.074 yields 0.033405

$$V_{h=0.877 \text{ ft}} = 34{,}992 \text{ x } 0.033405 = 1168.9, 1169 \text{ gallons}$$

$$V_{VORTEX\text{-}U} = V_{h=0.877 \text{ ft}} - V_2$$

$$V_{VORTEX\text{-}U} = 1169 - 321 = \underline{848 \text{ gallons}}$$

B. Calculating the Required Submergence to Prevent Vortices in the Day Tank ($V_{VORTEX\text{-}D}$):

   The methods used in Section 6.3.3.A above are used here.

1. Calculating Q:

   The worst case EDG operation used in this calculation is 2,860 kW which corresponds to a fuel consumption rate of 0.0747 gal/(kW-hr) (Section 6.5.2). Converting this consumption rate to a flowrate and accounting for two Day Tanks yields:

$$Q = \left[0.0747 \frac{gallon}{kW \cdot hr} x 2860 kW x \frac{1 hr}{60 \min}\right] \div 2 = 1.78 gpm$$

2. Calculating the Submergence ($S_D$), where D = 0.957 in. per References 9 and 19:

$$S_D = 0.957\text{ in} + 0.574\frac{1.78\text{ gpm}}{0.957\text{ in}^{1.5}} = 2.04\text{ in} = 0.1706\text{ ft}; 0.171\text{ ft}$$

3. Calculating the Unavailable Volume of Fuel Oil Due to the Submergence in a day tank Using Reference 13:

$$V_{VORTEX\text{-}D} = V_{(h1+S\text{-}D)} - V_5\,(5\text{ gallons})$$

$$h_1 + S_D = 0.25 + 0.171 = 0.421\text{ ft}$$

For $V_{(h1+S\text{-}D)}$ use the same equation as used for $V_5$.

$$V_{VORTEX-D} = \left\{\left[\frac{\pi}{3}(0.421)^2\left(3\text{ x }\frac{42}{12} - 0.421\right)\right]\text{ft}^3\text{ x }7.48\frac{\text{gal}}{\text{ft}^3}\right\} - 5\text{gallons} = 8.99;\ \underline{\underline{9\text{ gallons}}}$$

6.3.4 Calculating the unavailable volume due to UFOST Instrument Uncertainty ($V_{I\text{-}U}$)

Using the values and method from Assumption 4.2 (Total Error = 1.61%):

UFOST Capacity x Total Error = Instrument Uncertainty (gal.)

$$V_{I\text{-}U} = 34{,}992 \text{ x } 0.0161 = \underline{564\text{ gallons}}$$

6.3.5 Unavailable Fuel Volume Summary

UFOST: 1,733 gallons (321 + 848 + 564)

Day Tank: 28 gallons [(5 + 9) x 2]

## 6.4 Available Fuel Volumes ($V_A$)

6.4.1 UFOST Available Fuel Volume ($V_{A\text{-}U}$):

$$V_{A\text{-}U} = (V_1 + V_2) - V_2 - V_{VORTEX\text{-}D} - V_{I\text{-}U}$$

$$V_{A\text{-}U} = 34{,}992 - 321 - 848 - 564 = \underline{33{,}259\text{ gallons}}$$

NOTE: 33,259 gallons per UFOST and 2 UFOST's therefore Technical Specifications of 35,000 gal combined between two UFOST's (section 3.7.a.7) are met.

NOTE: The current procedural requirement per OP-KW-NOP-DGM-002 rev. 1 "Loading Diesel Generator Fuel Oil" limiting the EDG fuel oil storage tanks to 90% full or 31,500 gpm

for overfill prevention is based on the Wisconsin Administrative Code and Federal rule 40 CFR part 280 "Technical Standards and Corrective Action Requirements for Owners and Operators of Underground Storage Tanks (UST)". As stated in the revision tracking and processing record for the procedure "Loading Diesel Generator Fuel Oil" dated 7-30-97 it states that although the Diesel Generator Tanks are exempt from the 90% requirement the rule should be used as a guide whenever possible.

6.4.2 Day Tank Available Fuel Volume ($V_{A\text{-}D}$):

$$V_{A\text{-}D} = [(V_3 + V_4) - V_5 - V_{VORTEX\text{-}D}] \times 2$$

$$V_{A\text{-}D} = [(598 + 38) - 5 - 9] \times 2 = \underline{1{,}244 \text{ gallons}}$$

NOTE: 1,244 gal, therefore Technical Specifications of 1,000 gal per Day Tank (section 3.7.a.7) are met. Also note that the Technical Specification requirement occurs below the LLA for the Day Tank.

6.4.3 Total Available Fuel Volume ($V_A$):

$$V_A = V_{A\text{-}U} + V_{A\text{-}D} = 33{,}259 + 1{,}244 = \underline{34{,}503 \text{ gallons}}$$

## 6.5 Required Minimum Fuel Oil Storage Volume ($V_R$)

In accordance with ANSI N195 (Reference 2), fuel oil storage requirements can be calculated by either of the following two methods:

- Taking into account the time dependence of diesel generator loads

-or-

- Conservative method, based on the continuous rating of the diesel-generator

The conservative calculation method is recommended by ANSI N195 and will be used for this calculation.

The conservative calculation for the minimum fuel oil storage volume is:

$V_R$ = Volume Consumed for 7 Days ($V_{R\text{-}7}$) + Volume Consumed by Testing ($V_{R\text{-}T}$)

6.5.1 Discussion

The fuel consumption rates and totals for the required runs will be calculated using the minimum allowable HHV specified for new diesel fuel (Reference 17 & Attachment 8). Reference 17 is applicable to each fuel delivery regardless of fuel type (regular, Low Sulfur, or Ultra Low Sulfur Diesel (ULSD)) to ensure that the fuel meets the HHV requirements.

- From page 7-16, Table 11 – "Heat Values of Petroleum Oils" in Marks Handbook (Reference 13), it is shown that the HHV in Btu/gal decreases with a decrease in density (ρ); therefore, using the lowest allowable HHV will result in the largest required fuel oil volume.
- The original fuel consumption rates as provided by the Vendor (listed in Attachment 4) are for fuel oil with a HHV of 19,450 Btu/ lb.
- The EMD Fuel Oil Chart (Reference 26) agrees with the chart in Reference 13, and will be used since it provides the exact values of the HHV used in Attachment 4. This chart shows that 19,450 BTU/lb corresponds to a HHV of 141,200 BTU/gal and a density of 7.26 lb/gal.

The lowest acceptable HHV is 137,000 BTU/gal (Reference 17). Therefore, the lower HHV at the lowest acceptable density will increase the fuel consumption rates by:

$$\frac{141{,}200\ \mathrm{BTU}/\mathrm{gal}}{137{,}000\ \mathrm{BTU}/\mathrm{gal}} = 1.031 \Rightarrow 3.1\%$$

6.5.2 Calculating fuel consumption rates:

1,250 kW

$$\frac{0.595\dfrac{\mathrm{lb}}{\mathrm{kW\cdot hr}}}{7.26\dfrac{\mathrm{lb}}{\mathrm{gal}}} = 0.0820\frac{\mathrm{gal}}{\mathrm{kW\cdot hr}},\quad 0.0820\frac{\mathrm{gal}}{\mathrm{kW\cdot hr}} \times 1.031 = \underline{\underline{0.0845\frac{\mathrm{gal}}{\mathrm{kW\cdot hr}}}}$$

2,600 kW

$$\frac{0.525\dfrac{\mathrm{lb}}{\mathrm{kW\cdot hr}}}{7.26\dfrac{\mathrm{lb}}{\mathrm{gal}}} = 0.0723\frac{\mathrm{gal}}{\mathrm{kW\cdot hr}},\quad 0.0723\frac{\mathrm{gal}}{\mathrm{kW\cdot hr}} \times 1.031 = \underline{\underline{0.0746\frac{\mathrm{gal}}{\mathrm{kW\cdot hr}}}}$$

2,860 kW

$$\frac{0.526\dfrac{\mathrm{lb}}{\mathrm{kW\cdot hr}}}{7.26\dfrac{\mathrm{lb}}{\mathrm{gal}}} = 0.0725\frac{\mathrm{gal}}{\mathrm{kW\cdot hr}},\quad 0.0725\frac{\mathrm{gal}}{\mathrm{kW\cdot hr}} \times 1.031 = \underline{\underline{0.0747\frac{\mathrm{gal}}{\mathrm{kW\cdot hr}}}}$$

6.5.3 Calculating the Volume Consumed for 7 Days @ 2,600 kW ($V_{R-7}$):

$$V_{R-7} = 2600\text{kW x}\left(7\text{days x } 24\frac{\text{hrs}}{\text{day}}\right)\text{x } 0.0746\frac{\text{gal}}{\text{kW}\cdot\text{Hr}} = \underline{\underline{32{,}586\,\text{gallons}}}$$

NOTE: This volume of fuel minus the available combined Day Tank volume (32,586 - 1,244) yields the required available volume in the UFOST, 31,342 gallons. Accounting for the UFOST unavailable volumes (as shown in Section 6.3.5), the indicated volume required in the UFOST is 33,075 gallons (31,342 + 1,733). This value is higher than the administrative limit of 90% (31,500 gallons) as stated in the note to Section 6.4.1. However, this limit is a guide utilized to prevent overflowing the UFOST's.

The tank height relating to 31,500 is found by the following:

$$34{,}992 - 31{,}500 = 3{,}492$$

The coefficient from attachment 2 that would yield 3,492 is 0.100 as shown below:

$$34{,}992 \times X = 3{,}492 \qquad \frac{3{,}492}{34{,}992} = 0.0997,\ 0.100$$

Matching this coefficient to attachment 2 yields an h/D value of 0.157; the resulting h value is found by:

$$0.157 = \frac{h}{D},\ D = 11.92 \qquad h = 11.92 \times 0.157 = \underline{\underline{1.87\text{ ft}}}$$

Therefore, 1.87 ft from the top of the tank is the 90% administrative volume limit.

The tank height relating to the UFOST indicated volume required for $V_{R-7}$ is found by the following:

$$34{,}992 - 33{,}075 = 1{,}917$$

The coefficient from attachment 2 that would yield 1,917 is 0.055 as shown below:

$$34{,}992 \times X = 1{,}917 \qquad \frac{1{,}917}{34{,}992} = 0.05478,\ 0.055$$

Matching this coefficient to attachment 2 yields an h/D value of 0.104; the resulting h value is found by:

$$0.104 = \frac{h}{D},\ D = 11.92 \qquad h = 11.92 \times 0.104 = \underline{\underline{1.24\text{ ft}}}$$

Therefore, 1.24 ft from the top of the tank is the required indicated volume for $V_{R-7}$.

The sketch below illustrates the unused tank capacity at the top of the UFOST, and is Not To Scale (NTS).

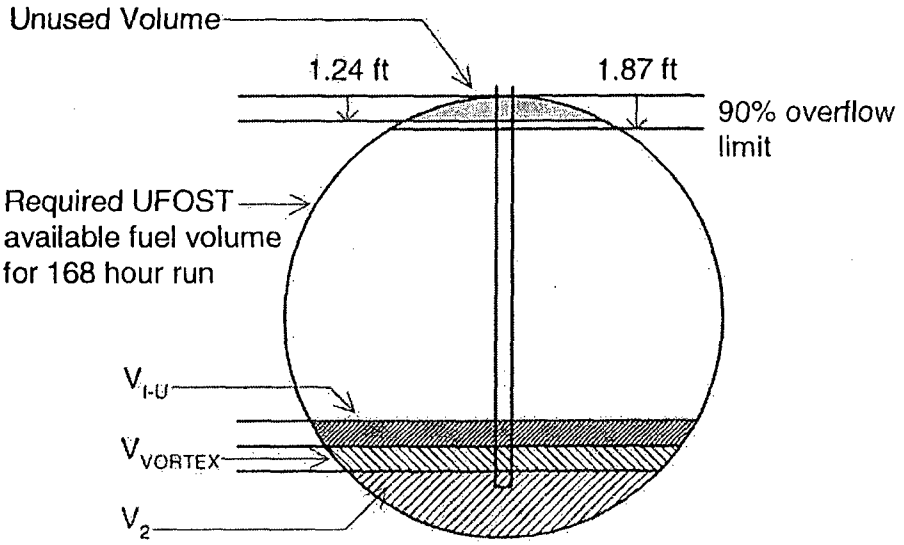


6.5.4 Calculating the Volume Consumed for required testing ($V_{R-T}$):

A. 1 hour monthly test @ 2,600 kW with Heatup and Cooldown intervals not exceeding 30 minutes total ($V_{R-1(HU/CD)}$):

A one hour run @ 2,600 kW will consume:

$$V_{R-1hr} = 2600\text{kW x } (1\text{ hr}) \text{ x } 0.0746 \frac{\text{gal}}{\text{kW} \cdot \text{Hr}} = 193.96, \underline{\underline{194 \text{ gallons}}}$$

15 minute Heatup and Cooldown runs $V_{R-T\ (HU/CD)}$ @ 1,250 kW (half continuous load) will consume:

$$V_{R-T(HU/CD)} = 1{,}250 \text{ kW x } (0.5 \text{ hr}) \text{ x } 0.0845 \frac{\text{gal}}{\text{kW} \cdot \text{hr}} = 52.8, \ \underline{\underline{53 \text{ gallons}}}$$

The Heatup and Cooldown runs account for loading time, synchronizing the EDG with the grid, and engine warm-up/cool-down periods.

NOTE: ANSI N195-1976 (Reference 2) requires enough fuel to be on hand in the Day Tanks to allow for a 1 hour run including 10% margin.

A 1 hour test with Heatup and Cooldown periods not exceeding 30 minutes total and including 10% margin will consume:

$$V_{R-1(HU/CD)} = (194 + 53) \text{ x } 1.10 = \underline{272 \text{ gallons}}$$

NOTE: Adding $V_{R-1(HU/CD)}$ to the required volume in the UFOST will further exceed the 90% administrative limit on the UFOST, but **will not exceed** the capacity of the tank (33,075 + 272 = 33,347 < 34,992).

B. 24 hour 18 month test @ 2,860 kW ($V_{R-18}$):

$$V_{R-18} = 2{,}860\ \text{kW x } (24\text{hrs}) \text{ x } 0.0747 \frac{\text{gal}}{\text{kW} \cdot \text{hr}} = \underline{\underline{5{,}127\ \text{gallons}}}$$

C. Calculating ($V_{R-T}$):

$$V_{R-T} = V_{R-I(HU/CD)} + V_{R-18} = 272 + 5{,}127 = 5{,}399\ \underline{5{,}400\ \text{gallons}}$$

NOTE: Adding $V_{R-18}$ (5,400 gallons) to the required indicated volume in the UFOST (33,057 gallons) **will exceed** the capacity of both one UFOST (33,259 gallons) and the Day Tanks combined (1,244 gallons) (33,057 + 5,400 = **38,457** > 33,259 + 1,244 = **34,503**). However, the 24 hour run is only required once every refueling cycle (18 months) and fuel replenishment as a result of the 24 hour run can be planned for in advance. Furthermore, once an EDG starts its 24 hour run, it is not expected to provide the required 7 days of power, and as such, other precautions are taken, i.e., the other EDG will be the protected train.

### 6.6 Analysis of Assumption 4.1:

Per Drawing M-272 (Reference 5):

- The Day Tank is mounted on the floor @ elevation 585'-0" (585 ft)
- The Day Tank LLA is @ 596'-5", and assumed at 596'-3" for calibration (596.25 ft)
- The tank level for FOTP start is @ elevation 596'-10" (596.833 ft)
- The tank level for FOTP stop is @ elevation 597'-4" (597.3 ft)

Confirm that the amount of fuel between the nominal LLA and 5" above the LLA compensates for assuming that the Day Tank fluid is at 60° F.

The volume of fuel equal to 5" in two day tanks is:

$$V_{5in_in_2\text{--}DayTanks} = 2x\left(\frac{\pi}{4}D^2 x\ L\right) = 2 \cdot x\left[\frac{\pi}{4}(3.94)^2\left(\frac{5}{12}\right)\right] ft^3 x\ 7.480\frac{gal}{ft^3} = 75.99;\ 76\ gallons$$

At a HHV of 137,000 Btu/lb (minimum HHV per Design Input 3.3) the specific gravity is 0.835 (per Reference 26).

For conservatism, references 22 and 23 indicate that the HHV for ULSD can be between 1.2% and 4% lower than for Low Sulfur Diesel fuel; however, all fuel shipments at KPS have a designated HHV value and are tested by the vendor prior to delivery (Attachment 8, page 2 of 6). Using the conservative approach for this

sections analysis, the specific gravity of ULSD is 0.835, then the HHV for ULSD could be as much as 4% lower or:

$$137{,}000 \text{ Btu/lb x } (1.0 - 0.04) = 131{,}520 \text{ Btu/lb}$$

Reversing this analysis means that for ULSD with a HHV equal to 137,000 could result in ULSD with a specific gravity equal to:

$$0.835 \text{ x } 1.04 = 0.868$$

Assuming a worst case temperature of 110° F for the fuel in the day tank, the specific gravity of fuel at 110° F is determined from the table in Reference 19, page A-7 and is:

$$SG_{110°F} = 0.855$$

This value results in the volume of 60° F oil increasing from 1,272 gallons (Section 6.2.2, total volume in the Day Tank below the LLA) to:

$$@\ 110\ °F \rightarrow \quad V_{D@110F} = 1{,}272 \text{x} \frac{0.868}{0.855} = 1{,}291 \text{ gallons}$$

Which is an increase in volume of:

$$1{,}291 \text{ gallons} - 1{,}272 \text{ gallons} = 19 \text{ gallons}$$

19 gallons < 76 gallons ($V_{5in\ in\ 2\ Day\ Tanks}$) located above the LLA. Therefore, the assumption that using 60° F for the oil in the day tank is confirmed to be accurate.

## 6.7 Analysis of Day Tank Overflow due to temperature difference

Confirm that there is enough free space above the maximum fill level in the day tanks to prevent the tanks from overflowing due to expansion of the fuel due to the fuel temperature increasing from 60° F to 110° F (this calculation is for the volume in <u>one</u> day tank).

Per Reference 5, the maximum fill level in the tank is 597'-4". Per Reference 11, the calibration accuracy for the pump start and stop switches is ±1". This gives a maximum tank level of 597'-5". The total volume in the tank to this level is:

$$V_{below\ 597'\text{-}5''} = (V_3 + V_4 + V_5) + V_{596'\text{-}3''\ to\ 597'\text{-}5''}$$

$$V_{below\ 597'-5''} = (598+38) + \left\{\left[\frac{\pi}{4}(3.94)^2\left(\frac{14}{12}\right)\right]\text{ft}^3 \text{ x } 7.480\,\frac{\text{gal}}{\text{ft}^3}\right\} = (598+38) + 107 = 743 \text{ gallons}$$

A. Volume in the day tank above level 597'-5":

$V_{>597'-5"}$ = Volume in Head + Volume in cylinder section

Volume in head:

$$V_4 + V_5$$

Volume in cylinder section:

Length of cylinder section:

$$(598'\text{-}0" - 597'\text{-}5") + h_2$$

$$0.583 + 0.31 = 0.893 \text{ ft}$$

$$V_{>597'-5"} = (V_4 + V_5) + \left\{\left[\frac{\pi}{4}(3.94)^2(0.893)\right]\text{ft}^3 \text{x} 7.480\frac{\text{gal}}{\text{ft}^3}\right\} = 38 + 81.44 = 119.4 \text{ gallons}$$

B. Volume increase in the tank due to temperature increase from 60° F to 110°:

@ 110° F ➔ $V_{<597'-5"} = 743 \text{ x } \frac{0.868}{0.855} = 754.3; \underline{\underline{755 \text{ gallons}}}$

Which is an increase in volume of:

755 gallons – 743 gallons = 12 gallons per tank

= 24 gallons in the Day Tank

12 gallons < 119.14 gallons; the Day Tank will not overflow due to expansion due to a temperature increase in the fuel oil.

## 7.0 CONCLUSIONS

### 7.1 Available Fuel Oil Storage Volume for each Safeguards Diesel

| Tank | Volume (gal) | Section |
|---|---|---|
| UFOST | 33,259 | 6.4.1 |
| Day Tanks (combined) | 1,244 | 6.4.2 |
| **Total** | 34,503 | 6.4.3 |

7.1.1. Technical Specification Requirements vs. Available Fuel Volume:

Available Volume in each UFOST 33,259 gallons

Technical Specification Requirement 35,000 gallons
NOTE: Per Section 3.5, the combined volume from 2 UFOST's must equal 35,000 gallons.

7.1.2 Technical Specification Requirements vs. Day Tank Available Volume below LLA:

Available Volume in the Day Tanks (combined) below the LLA Setpoint 1,244 gallons

Technical Specification Requirement 1,000 gallons
NOTE: Per Section 3.5, the Day Tanks (combined) available volume must equal 1,000 gallons.

### 7.2 Required Fuel Oil Storage Volume for a 7 day (168 hour) run @ 2,600 kW

| | |
|---|---|
| Fuel Consumed (gal) | 32,586 (Section 6.5.3) |

### 7.3 Required Fuel Oil Storage Volume for testing requirements

| Test | Volume (gal) | Section |
|---|---|---|
| $V_{R-1(HU/CD)}$ (Monthly) | 272 | 6.5.4.A |
| $V_{R-18}$ (Once per cycle) | 5,127 | 6.5.4.B |
| **Total** | 5,400 | 6.5.4.C |

There is sufficient available fuel oil storage volume for each Safeguards Diesel (34,503) to allow for the required 7 day run and one required monthly test run.

32,586 gallons + 272 gallons = 32858 gallons < 34,503 gallons

## 7.4 Summary Table

NOTE: all fuel volumes are given in terms of gallons.

| | | | |
|---|---|---|---|
| Fuel requirement for 7 day run | 32,586 | | Section 6.5.3 |
| Day tanks (combined) Available Volume at the LLA | -1,244 | | Section 6.4.2 |
| | 31,342 | Required UFOST available fuel volume for 168 hour run @ 2,600 kW. | |
| Unavailable UFOST Volume due to: | | | |
| Suction Pipe Placement | 321 | | Section 6.3.1 |
| Vortexing | 848 | | Section 6.3.3 |
| Instrument Uncertainty | +564 | | Section 6.3.4 |
| | 1,733 | | |
| | 31,342 | | |
| | +1,733 | | |
| | 33,075 | Required UFOST indicated volume (at LI-18002 and LI-18003) for 168 hour run @ 2,600 kW. | |
| Indicated post-testing level should be > 33,075 | | | |
| Fuel consumption for 1 hour run @ 2,600 kW with HU and CD @ 1,250 kW not to exceed 30 min. combined (monthly required test) | 272 | | Section 6.5.4.A |
| | 33,075 | | |
| | +272 | | |
| | 33,347 | Required UFOST indicated volume (at LI-18002 and LI-18003) for 168 hour run AND monthly surveillance run. | |
| Indicated pre-testing level should be > 33,347 | | | |

## 8.0 Attachments

| Number | Title | Pages |
|---|---|---|
| 1 | Pressure Vessel Handbook, Fourth Edition, by Eugene F. Megyesy, pages 293 & 294. | 2 |
| 2 | Pressure Vessel Handbook, Fourth Edition, by Eugene F. Megyesy, pages 368, 369 & 370. | 3 |
| 3 | Pressure Vessel Handbook, Fourth Edition, by Eugene F. Megyesy, pages 366 & 367. | 2 |
| 4 | Telefax to Don Norwick Western Engine, from Randy Sowa, EMD, regarding fuel consumption rates, dated 7-19-88 | 1 |
| 5 | EMD Fuel Oil Chart, Document No. 9068-ES | 1 |
| 6 | Figure 18 of ASHRAE Applications Handbook, 2003 edition. Page 32.19 | 1 |
| 7 | P.O. K-208, Purchase Order for Fuel Oil Pumps | 1 |
| 8 | Dominion PTE, Number 100000001322, Version 1, stock number 42106289 | 6 |
| 9 | SP-10-179, dated 4-06-05 and 12-14-06and SP-10-181, dated Jan 18 2007 and Feb 17, 2005. | 4 |

CALC# C-10033 293

Attach. #1, p. 1 of 2

# DIMENSIONS OF HEADS

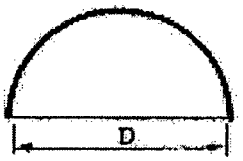


HEMISPHERICAL

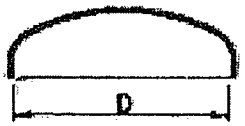


ELLIPSOIDAL

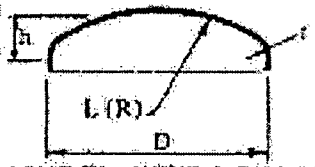


ASME FLANGED & DISHED

## SYMBOLS USED IN THE TABLES

$D$ = inside diameter of hemispherical and ellipsoidal heads, outside diameter of ASME flanged & dished heads

$h$ = inside depth of dish.

$L(R)$ = inside radius of dish of ASME flanged & dished heads as used in formulas for internal or external pressure.

$M$ = factor used in formulas for internal pressure.

$r$ = inside crown radius of ASME flanged & dished heads.

$t$ = wall thickness, nominal or minimum

ALL DIMENSIONS IN INCHES

| DIAMETER D | | WALL THICKNESS | | | | | | | |
|---|---|---|---|---|---|---|---|---|---|
| | | 3/8 | 1/2 | 5/8 | 3/4 | 7/8 | 1 | 1 1/8 | 1 1/4 |
| 14 | L (R) | 12 | 12 | 12 | | | | | |
| | r | 1.125 | 1.500 | 1.875 | | | | | |
| | h | 2.625 | 2.750 | 2.938 | | | | | |
| | M | 1.56 | 1.46 | 1.39 | | | | | |
| 16 | L (R) | 15 | 15 | 14 | 14 | | | | |
| | r | 1.125 | 1.500 | 1.875 | 2.250 | | | | |
| | h | 2.750 | 2.875 | 3.188 | 3.375 | | | | |
| | M | 1.65 | 1.54 | 1.44 | 1.36 | | | | |
| 18 | L (R) | 18 | 16 | 15 | 15 | 18 | | | |
| | r | 1.125 | 1.500 | 1.875 | 2.250 | 2.625 | | | |
| | h | 2.875 | 3.313 | 3.563 | 3.750 | 3.625 | | | |
| | M | 1.75 | 1.56 | 1.46 | 1.39 | 1.41 | | | |
| 20 | L (R) | 18 | 18 | 18 | 18 | 18 | 18 | | |
| | r | 1.250 | 1.500 | 1.875 | 2.250 | 2.625 | 3.000 | | |
| | h | 3.500 | 3.563 | 3.750 | 3.875 | 4.063 | 4.250 | | |
| | M | 1.69 | 1.62 | 1.52 | 1.46 | 1.41 | 1.36 | | |
| 22 | L (R) | 21 | 20 | 20 | 20 | 20 | 20 | 20 | |
| | r | 1.375 | 1.500 | 1.875 | 2.250 | 2.625 | 3.000 | 3.375 | |
| | h | 3.688 | 3.813 | 4.000 | 4.188 | 4.313 | 4.500 | 4.688 | |
| | M | 1.72 | 1.65 | 1.56 | 1.50 | 1.44 | 1.39 | 1.36 | |
| 24 | L (R) | 24 | 24 | 24 | 24 | 24 | 24 | 24 | 24 |
| | r | 1.500 | 1.500 | 1.875 | 2.250 | 2.625 | 3.000 | 3.375 | 3.750 |
| | h | 3.875 | 3.813 | 4.000 | 4.188 | 4.375 | 4.563 | 4.813 | 5.000 |
| | M | 1.75 | 1.75 | 1.65 | 1.58 | 1.50 | 1.46 | 1.41 | 1.39 |

Calc # C-10033

## DIMENSIONS OF HEADS

Attach #1, p1 of 2

ALL DIMENSIONS IN INCHES

| DIAMETER D | SEE PAGE 293 | WALL THICKNESS | | | | | | | | |
|---|---|---|---|---|---|---|---|---|---|---|
| | | 5/8 | 1/2 | 5/8 | 3/4 | 7/8 | 1 | 1 1/8 | 1 1/4 | 1 3/8 |
| 26 | L (R) | 24 | 24 | 24 | 24 | 24 | 24 | 24 | 24 | 24 |
| | r | 1.625 | 1.625 | 1.875 | 2.250 | 2.625 | 3.000 | 3.375 | 3.750 | 4.125 |
| | h | 4.500 | 4.438 | 4.500 | 4.688 | 4.875 | 5.000 | 5.188 | 5.375 | 5.625 |
| | M | 1.72 | 1.72 | 1.65 | 1.56 | 1.50 | 1.46 | 1.41 | 1.39 | 1.36 |
| 28 | L (R) | 26 | 26 | 26 | 26 | 24 | 24 | 24 | 24 | 24 |
| | r | 1.750 | 1.750 | 1.875 | 2.250 | 2.625 | 3.000 | 3.375 | 3.750 | 4.125 |
| | h | 4.813 | 4.750 | 4.750 | 4.938 | 5.375 | 5.563 | 5.688 | 5.875 | 6.063 |
| | M | 1.72 | 1.72 | 1.69 | 1.60 | 1.50 | 1.46 | 1.41 | 1.39 | 1.36 |
| 30 | L (R) | 30 | 30 | 30 | 30 | 30 | 30 | 30 | 30 | 30 |
| | r | 1.875 | 1.875 | 1.875 | 2.250 | 2.625 | 3.000 | 3.375 | 3.750 | 4.125 |
| | h | 4.875 | 4.813 | 4.813 | 5.000 | 5.125 | 5.375 | 5.500 | 5.750 | 5.938 |
| | M | 1.75 | 1.75 | 1.75 | 1.65 | 1.60 | 1.54 | 1.50 | 1.46 | 1.44 |
| 32 | L (R) | 30 | 30 | 30 | 30 | 30 | 30 | 30 | 30 | 30 |
| | r | 2.000 | 2.000 | 2.000 | 2.250 | 2.625 | 3.000 | 3.375 | 3.750 | 4.125 |
| | h | 5.563 | 5.500 | 5.375 | 5.500 | 5.625 | 5.813 | 6.000 | 6.188 | 6.375 |
| | M | 1.72 | 1.72 | 1.72 | 1.65 | 1.60 | 1.54 | 1.50 | 1.50 | 1.44 |
| 34 | L (R) | 34 | 34 | 30 | 30 | 30 | 30 | 30 | 30 | 30 |
| | r | 2.125 | 2.125 | 2.125 | 2.250 | 2.625 | 3.000 | 3.375 | 3.750 | 4.125 |
| | h | 5.563 | 5.500 | 6.000 | 6.063 | 6.188 | 6.313 | 6.438 | 6.625 | 6.813 |
| | M | 1.75 | 1.75 | 1.69 | 1.65 | 1.60 | 1.54 | 1.54 | 1.46 | 1.44 |
| 36 | L (R) | 36 | 36 | 36 | 36 | 36 | 36 | 36 | 36 | 36 |
| | r | 2.250 | 2.250 | 2.250 | 2.250 | 2.625 | 3.000 | 3.375 | 3.750 | 4.125 |
| | h | 5.938 | 5.875 | 5.813 | 5.750 | 5.938 | 6.125 | 6.313 | 6.500 | 6.688 |
| | M | 1.75 | 1.75 | 1.75 | 1.75 | 1.69 | 1.62 | 1.58 | 1.52 | 1.52 |
| 38 | L (R) | 36 | 36 | 36 | 36 | 36 | 36 | 36 | 36 | 36 |
| | r | 2.375 | 2.375 | 2.375 | 2.375 | 2.625 | 3.000 | 3.375 | 3.750 | 4.125 |
| | h | 6.500 | 6.438 | 6.375 | 6.375 | 6.438 | 6.563 | 6.750 | 6.938 | 7.125 |
| | M | 1.72 | 1.72 | 1.72 | 1.72 | 1.69 | 1.62 | 1.60 | 1.52 | 1.48 |
| 40 | L (R) | 40 | 40 | 36 | 36 | 36 | 36 | 36 | 36 | 36 |
| | r | 2.500 | 2.500 | 2.500 | 2.500 | 2.625 | 3.000 | 3.375 | 3.750 | 4.125 |
| | h | 6.625 | 6.563 | 6.938 | 7.000 | 7.000 | 7.125 | 7.313 | 7.438 | 7.625 |
| | M | 1.69 | 1.69 | 1.69 | 1.69 | 1.69 | 1.62 | 1.58 | 1.52 | 1.48 |
| 42 | L (R) | 40 | 40 | 40 | 40 | 40 | 40 | 36 | 36 | 36 |
| | r | 2.625 | 2.625 | 2.625 | 2.625 | 2.625 | 3.000 | 3.375 | 3.750 | 4.125 |
| | h | 7.188 | 7.125 | 7.063 | 7.000 | 7.000 | 7.125 | 7.125 | 8.000 | 8.125 |
| | M | 1.72 | 1.72 | 1.72 | 1.72 | 1.72 | 1.65 | 1.56 | 1.52 | 1.48 |
| 48 | L (R) | 42 | 42 | 42 | 42 | 42 | 42 | 42 | 42 | 42 |
| | r | 3.000 | 3.000 | 3.000 | 3.000 | 3.000 | 3.000 | 3.375 | 3.750 | 4.125 |
| | h | 8.000 | 8.750 | 8.688 | 8.625 | 8.563 | 8.500 | 8.625 | 8.813 | 9.000 |
| | M | 1.69 | 1.69 | 1.69 | 1.69 | 1.69 | 1.69 | 1.62 | 1.58 | 1.54 |
| 54 | L (R) | 54 | 48 | 48 | 48 | 48 | 48 | 48 | 48 | 48 |
| | r | 3.250 | 3.250 | 3.250 | 3.250 | 3.250 | 3.250 | 3.375 | 3.750 | 4.125 |
| | h | 8.938 | 9.750 | 9.750 | 9.625 | 9.500 | 9.375 | 9.438 | 9.625 | 9.750 |
| | M | 1.77 | 1.72 | 1.72 | 1.72 | 1.72 | 1.72 | 1.69 | 1.65 | 1.60 |
| 60 | L (R) | 60 | 60 | 54 | 54 | 54 | 54 | 54 | 54 | 54 |
| | r | 3.625 | 3.625 | 3.625 | 3.625 | 3.625 | 3.625 | 3.625 | 3.750 | 4.125 |
| | h | 10.000 | 9.875 | 10.688 | 10.625 | 10.563 | 10.500 | 10.438 | 10.438 | 10.563 |
| | M | 1.77 | 1.77 | 1.72 | 1.72 | 1.72 | 1.72 | 1.72 | 1.69 | 1.65 |

CALC # C-10033
Attach #2, p1 of 3

368

## PARTIAL VOLUMES IN HORIZONTAL CYLINDERS

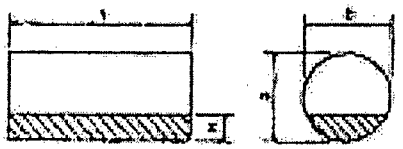

Partial volumes of horizontal cylinder equals total volume x coefficient (found from table below)

EXAMPLE

HORIZONTAL CYLINDER D = 10 ft., 0 in. H = 2.75 ft. L = 60 ft., 0 in.

TOTAL VOLUME: $0.7854 \times D^2 \times L$ Find the partial volume of the cylindrical shell

Total volume: $0.7854 \times 10^2 \times 60 = 4712.4$ cu. ft.

Coefficient from table:
H/D = 2.75/10 = .275

Refer to the first two figures (.27) in the column headed (H/D) in the table below. Proceed to the right until the coefficient is found under the column headed (5) which is the third digit. The coefficient of 0.275 is found to be .223507

Total volume x coefficient = partial volume
4712.4 x .223507 = 1053.25 cu. ft.
cu. ft. multiplied by 7.480519 = U. S. Gallon
cu. ft. multiplied by 28.317016 = Liter

### COEFFICIENTS

| H/D | 0 | 1 | 2 | 3 | 4 | 5 | 6 | 7 | 8 | 9 |
|---|---|---|---|---|---|---|---|---|---|---|
| .00 | .000000 | .000053 | .000151 | .000279 | .000429 | .000600 | .000788 | .000992 | .001212 | .001445 |
| .01 | .001697 | .001953 | .002223 | .002507 | .002800 | .003104 | .003419 | .003743 | .004077 | .004421 |
| .02 | .004773 | .005134 | .005501 | .005881 | .006267 | .006660 | .007061 | .007470 | .007885 | .008310 |
| .03 | .008742 | .009179 | .009625 | .010078 | .010534 | .010999 | .011470 | .011947 | .012432 | .012920 |
| .04 | .013417 | .013919 | .014427 | .014940 | .015459 | .015985 | .016515 | .017052 | .017593 | .018141 |
| .05 | .018692 | .019250 | .019813 | .020382 | .020955 | .021533 | .022116 | .022703 | .023295 | .023894 |
| .06 | .024495 | .025103 | .025716 | .026331 | .026952 | .027578 | .028208 | .028842 | .029481 | .030124 |
| .07 | .030772 | .031424 | .032081 | .032740 | .033405 | .034073 | .034747 | .035423 | .036104 | .036789 |
| .08 | .037478 | .038171 | .038867 | .039568 | .040273 | .040981 | .041694 | .042410 | .043129 | .043852 |
| .09 | .044579 | .045310 | .046043 | .046782 | .047523 | .048268 | .049017 | .049768 | .050524 | .051283 |
| .10 | .052044 | .052810 | .053579 | .054351 | .055126 | .055905 | .056688 | .057474 | .058262 | .059054 |
| .11 | .059850 | .060648 | .061449 | .062253 | .063062 | .063872 | .064687 | .065503 | .066323 | .067147 |
| .12 | .067972 | .068802 | .069633 | .070469 | .071307 | .072147 | .072991 | .073836 | .074686 | .075539 |
| .13 | .076393 | .077251 | .078112 | .078975 | .079841 | .080709 | .081581 | .082456 | .083332 | .084212 |
| .14 | .085094 | .085979 | .086866 | .087756 | .088650 | .089545 | .090443 | .091343 | .092246 | .093153 |
| .15 | .094061 | .094971 | .095884 | .096799 | .097717 | .098638 | .099560 | .100486 | .101414 | .102343 |
| .16 | .103275 | .104211 | .105147 | .106087 | .107029 | .107973 | .108920 | .109869 | .110820 | .111773 |
| .17 | .112728 | .113685 | .114645 | .115607 | .116572 | .117539 | .118508 | .119477 | .120450 | .121425 |
| .18 | .122403 | .123382 | .124364 | .125347 | .126333 | .127321 | .128310 | .129302 | .130296 | .131292 |
| .19 | .132290 | .133291 | .134292 | .135296 | .136302 | .137310 | .138320 | .139332 | .140345 | .141361 |
| .20 | .142378 | .143398 | .144419 | .145442 | .146468 | .147494 | .148524 | .149554 | .150587 | .151622 |
| .21 | .152659 | .153697 | .154737 | .155779 | .156822 | .157867 | .158915 | .159963 | .161013 | .162065 |
| .22 | .163120 | .164176 | .165233 | .166292 | .167353 | .168416 | .169480 | .170546 | .171613 | .172682 |
| .23 | .173753 | .174825 | .175900 | .176974 | .178053 | .179131 | .180212 | .181294 | .182378 | .183461 |
| .24 | .184550 | .185639 | .186729 | .187820 | .188912 | .190007 | .191102 | .192200 | .193299 | .194400 |
| .25 | .195501 | .196604 | .197709 | .198814 | .199922 | .201031 | .202141 | .203253 | .204368 | .205483 |
| .26 | .206600 | .207718 | .208837 | .209957 | .211079 | .212202 | .213326 | .214453 | .215580 | .216708 |
| .27 | .217839 | .218970 | .220102 | .221235 | .222371 | .223507 | .224645 | .225783 | .226924 | .228065 |
| .28 | .229209 | .230353 | .231498 | .232644 | .233791 | .234941 | .236091 | .237242 | .238395 | .239548 |
| .29 | .240703 | .241859 | .243016 | .244173 | .245331 | .246494 | .247655 | .248819 | .249983 | .251145 |
| .30 | .252318 | .253483 | .254652 | .255822 | .256992 | .258165 | .259338 | .260512 | .261687 | .262863 |
| .31 | .264039 | .265216 | .266397 | .267578 | .268760 | .269942 | .271126 | .272310 | .273495 | .274682 |

Calc # C-10033
Attach # 2, p. 2 of 3



## PARTIAL VOLUMES IN HORIZONTAL CYLINDERS COEFFICIENTS (Cont.)

| H/D | 0 | 1 | 2 | 3 | 4 | 5 | 6 | 7 | 8 | 9 |
|---|---|---|---|---|---|---|---|---|---|---|
| .32 | .274660 | .277054 | .279447 | .281837 | .284227 | .286613 | .288997 | .291378 | .293757 | .296132 |
| .33 | .298505 | .300872 | .303237 | .305598 | .307956 | .310310 | .312660 | .315007 | .317349 | .319687 |
| .34 | .322019 | .324348 | .326673 | .328994 | .331311 | .333623 | .335931 | .338234 | .340533 | .342827 |
| .35 | .345116 | .347401 | .349681 | .351956 | .354227 | .356493 | .358754 | .361010 | .363261 | .365507 |
| .36 | .367748 | .369984 | .372215 | .374441 | .376662 | .378878 | .381088 | .383293 | .385493 | .387688 |
| .37 | .389877 | .392062 | .394241 | .396415 | .398584 | .400747 | .402905 | .405058 | .407205 | .409347 |
| .38 | .411483 | .413614 | .415739 | .417859 | .419973 | .422081 | .424184 | .426281 | .428372 | .430458 |
| .39 | .432537 | .434611 | .436679 | .438741 | .440798 | .442848 | .444893 | .446931 | .448964 | .450990 |
| .40 | .453010 | .455024 | .457032 | .459034 | .461030 | .463020 | .465003 | .466980 | .468951 | .470915 |
| .41 | .472873 | .474824 | .476769 | .478707 | .480639 | .482564 | .484483 | .486395 | .488300 | .490199 |
| .42 | .492091 | .493977 | .495855 | .497727 | .499592 | .501450 | .503301 | .505145 | .506982 | .508812 |
| .43 | .510635 | .512451 | .514260 | .516062 | .517857 | .519645 | .521425 | .523198 | .524964 | .526722 |
| .44 | .528473 | .530216 | .531952 | .533680 | .535401 | .537114 | .538820 | .540518 | .542208 | .543890 |
| .45 | .545564 | .547230 | .548888 | .550538 | .552180 | .553814 | .555440 | .557058 | .558667 | .560268 |
| .46 | .561860 | .563444 | .565019 | .566585 | .568142 | .569690 | .571229 | .572759 | .574280 | .575792 |
| .47 | .577295 | .578788 | .580272 | .581746 | .583211 | .584666 | .586112 | .587548 | .588974 | .590390 |
| .48 | .591797 | .593194 | .594580 | .595956 | .597322 | .598678 | .600024 | .601359 | .602684 | .603998 |
| .49 | .605302 | .606595 | .607878 | .609150 | .610411 | .611662 | .612902 | .614131 | .615349 | .616556 |
| .50 | .617753 | .618938 | .620112 | .621275 | .622427 | .623568 | .624697 | .625815 | .626922 | .628017 |
| .51 | .629101 | .630173 | .631234 | .632283 | .633321 | .634347 | .635361 | .636364 | .637355 | .638334 |
| .52 | .639301 | .640257 | .641200 | .642132 | .643052 | .643960 | .644856 | .645740 | .646612 | .647472 |
| .53 | .648320 | .649156 | .649980 | .650792 | .651592 | .652380 | .653156 | .653919 | .654671 | .655410 |
| .54 | .656137 | .656852 | .657555 | .658245 | .658923 | .659588 | .660241 | .660881 | .661508 | .662123 |
| .55 | .662725 | .663314 | .663891 | .664455 | .665006 | .665544 | .666069 | .666581 | .667080 | .667566 |
| .56 | .668039 | .668499 | .668946 | .669380 | .669800 | .670207 | .670601 | .670981 | .671348 | .671701 |
| .57 | .672041 | .672367 | .672680 | .672979 | .673264 | .673536 | .673794 | .674038 | .674268 | .674485 |
| .58 | .674687 | .674876 | .675051 | .675212 | .675359 | .675492 | .675611 | .675716 | .675807 | .675884 |
| .59 | .675947 | .675996 | .676031 | .676052 | .676059 | .676052 | .676031 | .675996 | .675947 | .675884 |
| .60 | .675807 | .675716 | .675611 | .675492 | .675359 | .675212 | .675052 | .674878 | .674691 | .674490 |
| .61 | .674276 | .674048 | .673807 | .673553 | .673285 | .672004 | .672709 | .672401 | .672080 | .671746 |
| .62 | .671398 | .671037 | .670663 | .670276 | .669876 | .669463 | .669037 | .668598 | .668146 | .667681 |
| .63 | .667203 | .666712 | .666208 | .665691 | .665161 | .664618 | .664062 | .663493 | .662911 | .662316 |
| .64 | .661708 | .661087 | .660453 | .659806 | .659146 | .658473 | .657787 | .657088 | .656376 | .655651 |
| .65 | .654913 | .654162 | .653398 | .652621 | .651831 | .651028 | .650212 | .649383 | .648541 | .647686 |
| .66 | .646818 | .645937 | .645043 | .644136 | .643216 | .642283 | .641337 | .640378 | .639406 | .638421 |
| .67 | .637423 | .636412 | .635388 | .634351 | .633301 | .632238 | .631162 | .630073 | .628971 | .627856 |
| .68 | .626728 | .625587 | .624433 | .623266 | .622086 | .620893 | .619687 | .618468 | .617236 | .615991 |
| .69 | .614733 | .613462 | .612178 | .610881 | .609571 | .608248 | .606912 | .605563 | .604201 | .602826 |
| .70 | .601438 | .600037 | .598623 | .597196 | .595756 | .594303 | .592837 | .591358 | .589866 | .588361 |
| .71 | .586843 | .585312 | .583768 | .582211 | .580641 | .579058 | .577462 | .575853 | .574231 | .572596 |
| .72 | .570948 | .569287 | .567613 | .565926 | .564226 | .562513 | .560787 | .559048 | .557296 | .555531 |
| .73 | .553753 | .551962 | .550158 | .548341 | .546511 | .544668 | .542812 | .540943 | .539061 | .537166 |
| .74 | .535258 | .533337 | .531403 | .529456 | .527496 | .525523 | .523537 | .521538 | .519526 | .517501 |
| .75 | .515463 | .513412 | .511348 | .509271 | .507181 | .505078 | .502962 | .500833 | .498691 | .496536 |
| .76 | .494368 | .492187 | .489993 | .487786 | .485566 | .483333 | .481087 | .478828 | .476556 | .474271 |
| .77 | .471973 | .469662 | .467338 | .465000 | .462650 | .460286 | .457910 | .455520 | .453118 | .450702 |
| .78 | .448274 | .445833 | .443379 | .440912 | .438433 | .435940 | .433435 | .430917 | .428386 | .425842 |
| .79 | .423286 | .420717 | .418135 | .415541 | .412933 | .410313 | .407680 | .405034 | .402376 | .399705 |
| .80 | .397021 | .394325 | .391616 | .388894 | .386160 | .383413 | .380653 | .377881 | .375096 | .372299 |
| .81 | .369489 | .366666 | .363830 | .360982 | .358121 | .355248 | .352362 | .349463 | .346552 | .343628 |
| .82 | .340691 | .337742 | .334780 | .331806 | .328819 | .325820 | .322808 | .319784 | .316747 | .313698 |
| .83 | .310636 | .307562 | .304475 | .301376 | .298264 | .295140 | .292003 | .288854 | .285692 | .282518 |
| .84 | .279331 | .276132 | .272921 | .269697 | .266461 | .263212 | .259951 | .256678 | .253392 | .250094 |
| .85 | .246784 | .243461 | .240126 | .236779 | .233419 | .230047 | .226663 | .223266 | .219857 | .216436 |
| .86 | .213003 | .209557 | .206100 | .202630 | .199148 | .195654 | .192147 | .188628 | .185097 | .181554 |
| .87 | .177999 | .174432 | .170853 | .167262 | .163659 | .160044 | .156417 | .152778 | .149127 | .145465 |
| .88 | .141790 | .138104 | .134406 | .130696 | .126974 | .123241 | .119496 | .115740 | .111972 | .108192 |
| .89 | .104401 | .100598 | .096784 | .092958 | .089121 | .085273 | .081413 | .077542 | .073660 | .069767 |
| .90 | .065863 | .061948 | .058022 | .054085 | .050137 | .046178 | .042208 | .038227 | .034236 | .030234 |
| .91 | .026222 | .022199 | .018166 | .014122 | .010068 | .006003 | .001928 | .997843 | .993747 | .989642 |
| .92 | .985526 | .981400 | .977264 | .973118 | .968962 | .964796 | .960620 | .956434 | .952238 | .948032 |

Calc # C-10033
Attach #2, p. 3 of 3

370

PARTIAL VOLUMES IN HORIZONTAL CYLINDERS COEFFICIENTS (cont.)

| H/D | 0 | 1 | 2 | 3 | 4 | 5 | 6 | 7 | 8 | 9 |
|---|---|---|---|---|---|---|---|---|---|---|
| .93 | .969228 | .969621 | .970019 | .970419 | .970822 | .971227 | .971634 | .972042 | .972452 | .972863 |
| .94 | .973276 | .973690 | .974106 | .974524 | .974943 | .975364 | .975786 | .976209 | .976633 | .977058 |
| .95 | .977484 | .977911 | .978338 | .978767 | .979196 | .979626 | .980056 | .980487 | .980918 | .981350 |
| .96 | .981783 | .982216 | .982650 | .983084 | .983519 | .983954 | .984390 | .984826 | .985262 | .985699 |
| .97 | .986137 | .986574 | .987012 | .987450 | .987888 | .988327 | .988766 | .989205 | .989644 | .990084 |
| .98 | .990523 | .990963 | .991403 | .991843 | .992283 | .992723 | .993163 | .993603 | .994043 | .994483 |
| .99 | .994923 | .995363 | .995803 | .996243 | .996683 | .997123 | .997563 | .998003 | .998443 | .998883 |
| 1.00 | 1.000000 | | | | | | | | | |

Calc # C-10033
Attach # 3, p.1 of 2

366

# VOLUME OF SHELLS AND HEADS

| I.D. of Vessel in. | Cylindrical SHELL/LIN. FT. | | | | 2:1 ELLIP. HEAD* | | | |
|---|---|---|---|---|---|---|---|---|
| | Cu.Ft. | Gal. | Bbl. | Wt. of Water lb. | Cu.Ft. | Gal. | Bbl. | Wt. of Water lb. |
| 12 | 0.8 | 5.9 | 0.14 | 49 | 0.1 | 0.98 | 0.02 | 8.17 |
| 14 | 1.1 | 8.0 | 0.19 | 67 | 0.2 | 1.55 | 0.04 | 12.98 |
| 16 | 1.4 | 10.4 | 0.25 | 87 | 0.3 | 2.32 | 0.06 | 19.37 |
| 18 | 1.8 | 13.2 | 0.31 | 110 | 0.4 | 3.30 | 0.08 | 27.58 |
| 20 | 2.2 | 16.3 | 0.39 | 136 | 0.6 | 4.53 | 0.11 | 37.83 |
| 22 | 2.6 | 19.7 | 0.47 | 165 | 0.8 | 6.03 | 0.14 | 50.35 |
| 24 | 3.1 | 23.5 | 0.56 | 196 | 1.0 | 7.83 | 0.19 | 65.37 |
| 26 | 3.7 | 27.6 | 0.66 | 230 | 1.3 | 9.96 | 0.24 | 83.11 |
| 28 | 4.3 | 32.0 | 0.76 | 267 | 1.7 | 12.44 | 0.30 | 103.8 |
| 30 | 4.9 | 36.7 | 0.87 | 306 | 2.0 | 15.30 | 0.36 | 127.7 |
| 32 | 5.6 | 41.8 | 0.99 | 349 | 2.5 | 18.57 | 0.44 | 155.0 |
| 34 | 6.3 | 47.2 | 1.12 | 394 | 3.0 | 22.27 | 0.53 | 185.9 |
| 36 | 7.1 | 52.9 | 1.26 | 441 | 3.5 | 26.47 | 0.63 | 220.1 |
| 38 | 7.9 | 58.9 | 1.40 | 492 | 4.2 | 31.09 | 0.74 | 259.5 |
| 40 | 8.7 | 65.3 | 1.55 | 545 | 4.8 | 36.27 | 0.86 | 302.6 |
| 42 | 9.6 | 72.0 | 1.71 | 601 | 5.6 | 41.98 | 1.00 | 350.4 |
| 48 | 12.6 | 94.0 | 2.24 | 784 | 8.4 | 62.67 | 1.49 | 523.0 |
| 54 | 15.9 | 119.0 | 2.83 | 993 | 11.9 | 89.23 | 2.12 | 744.6 |
| 60 | 19.6 | 146.9 | 3.50 | 1226 | 16.3 | 122.4 | 2.91 | 1021 |
| 66 | 23.8 | 177.7 | 4.23 | 1483 | 21.8 | 162.9 | 3.88 | 1360 |
| 72 | 28.3 | 211.5 | 5.04 | 1765 | 28.3 | 211.5 | 5.04 | 1765 |
| 78 | 33.2 | 248.2 | 5.91 | 2071 | 35.9 | 268.9 | 6.40 | 2244 |
| 84 | 38.5 | 287.9 | 6.85 | 2402 | 44.9 | 335.9 | 8.00 | 2802 |
| 90 | 44.2 | 330.5 | 7.87 | 2758 | 55.2 | 413.1 | 9.84 | 3447 |
| 96 | 50.3 | 376.0 | 8.95 | 3138 | 67.0 | 501.3 | 11.94 | 4184 |
| 102 | 56.7 | 424.4 | 10.11 | 3542 | 80.3 | 601.4 | 14.32 | 5018 |
| 108 | 63.6 | 475.9 | 11.33 | 3971 | 95.4 | 713.8 | 17.00 | 5957 |
| 114 | 70.9 | 530.2 | 12.62 | 4425 | 112.2 | 839.5 | 20.00 | 7006 |
| 120 | 78.5 | 587.5 | 13.99 | 4903 | 130.9 | 979.2 | 23.31 | 8171 |
| 126 | 86.6 | 647.7 | 15.42 | 5405 | 151.5 | 1134 | 27.00 | 9459 |
| 132 | 95.0 | 710.9 | 16.93 | 5932 | 174.2 | 1303 | 31.03 | 10876 |
| 138 | 103.9 | 777.0 | 18.50 | 6484 | 199.1 | 1489 | 35.46 | 12428 |
| 144 | 113.1 | 846.0 | 20.14 | 7060 | 226.2 | 1692 | 40.29 | 14120 |

*Volume within the straight flange is not included

Calc # C-10033
Attach #3, p. 2 of 2 367

# VOLUME OF SHELLS AND HEADS

| I.D. of Vessel in. | ASME F & D. HEAD* | | | | HEMIS. HEAD* | | | |
|---|---|---|---|---|---|---|---|---|
| | Cu.Ft. | Gal. | Bbl. | Wt. of Water lb. | Cu.Ft. | Gal. | Bbl. | Wt. of Water lb. |
| 12 | 0.08 | 0.58 | 0.01 | 4.83 | 0.26 | 1.96 | 0.05 | 16.34 |
| 14 | 0.12 | 0.94 | 0.02 | 7.83 | 0.42 | 3.11 | 0.07 | 25.95 |
| 16 | 0.19 | 1.45 | 0.03 | 12.08 | 0.62 | 4.64 | 0.11 | 38.74 |
| 18 | 0.27 | 2.04 | 0.05 | 17.00 | 0.88 | 6.61 | 0.16 | 55.16 |
| 20 | 0.37 | 2.80 | 0.07 | 28.33 | 1.21 | 9.07 | 0.22 | 75.66 |
| 22 | 0.50 | 3.78 | 0.09 | 31.49 | 1.61 | 12.07 | 0.29 | 100.7 |
| 24 | 0.65 | 4.86 | 0.12 | 40.49 | 2.09 | 15.67 | 0.37 | 130.7 |
| 26 | 0.82 | 6.14 | 0.15 | 51.15 | 2.66 | 19.92 | 0.47 | 166.2 |
| 28 | 1.10 | 8.21 | 0.20 | 68.40 | 3.33 | 24.88 | 0.59 | 207.6 |
| 30 | 1.30 | 9.70 | 0.23 | 80.81 | 4.09 | 30.60 | 0.73 | 255.4 |
| 32 | 1.64 | 12.30 | 0.29 | 102.5 | 4.96 | 37.14 | 0.88 | 309.9 |
| 34 | 1.88 | 14.10 | 0.34 | 117.5 | 5.95 | 44.54 | 1.06 | 371.7 |
| 36 | 2.15 | 16.10 | 0.38 | 134.1 | 7.07 | 52.88 | 1.26 | 441.2 |
| 38 | 2.75 | 20.60 | 0.49 | 171.6 | 8.31 | 62.19 | 1.48 | 519.0 |
| 40 | 3.07 | 23.00 | 0.55 | 191.6 | 9.70 | 72.53 | 1.73 | 605.3 |
| 42 | 3.68 | 27.50 | 0.65 | 229.1 | 11.22 | 83.97 | 2.00 | 700.7 |
| 48 | 5.12 | 38.30 | 0.91 | 319.1 | 16.76 | 125.3 | 2.98 | 1046 |
| 54 | 7.30 | 54.60 | 1.30 | 454.9 | 23.86 | 178.5 | 4.25 | 1489 |
| 60 | 10.08 | 75.40 | 1.80 | 628.2 | 32.73 | 244.8 | 5.83 | 2043 |
| 66 | 13.54 | 101 | 2.41 | 843.9 | 43.56 | 325.8 | 7.76 | 2719 |
| 72 | 17.65 | 132 | 3.14 | 1100 | 56.55 | 423.0 | 10.07 | 3530 |
| 78 | 22.32 | 167 | 3.98 | 1391 | 71.90 | 537.8 | 12.80 | 4488 |
| 84 | 28.47 | 213 | 5.07 | 1775 | 89.60 | 671.7 | 16.00 | 5606 |
| 90 | 35.56 | 266 | 6.33 | 2216 | 110.4 | 826.2 | 19.67 | 6895 |
| 96 | 42.51 | 318 | 7.57 | 2649 | 134.0 | 1003 | 23.87 | 8368 |
| 102 | 52.14 | 390 | 9.29 | 3249 | 160.8 | 1203 | 28.63 | 10037 |
| 108 | 60.96 | 456 | 10.86 | 3799 | 190.9 | 1428 | 34.00 | 11914 |
| 114 | 73.66 | 551 | 13.12 | 4590 | 224.5 | 1679 | 39.98 | 14012 |
| 120 | 84.35 | 631 | 15.02 | 5257 | 261.8 | 1958 | 46.63 | 16343 |
| 126 | 97.32 | 728 | 17.33 | 6065 | 303.1 | 2267 | 53.98 | 18919 |
| 132 | 108.7 | 813 | 19.36 | 6773 | 348.5 | 2607 | 62.06 | 21752 |
| 138 | 127.0 | 950 | 22.62 | 7915 | 398.2 | 2978 | 70.91 | 24856 |
| 144 | 147.9 | 1106 | 26.33 | 9214 | 452.4 | 3384 | 80.57 | 28241 |

*Volume within the straight flange is not included

ELECTRO-MOTIVE

Calc # C-10033
Attach. # 4

Electro-Motive Division General Motors Corporation LaGrange, Illinois 60525 (312) 387-6000

TELEFAX COMMUNICATION

DATE: July 19, 1988

TIME: 8:52 am

TO: Mr. Don Norwick
Western Engine Company
Addison, IL

Fax No.: 620-0207

FROM: Mr. Randy Sowa
Electro-Motive Division

Following this cover page, there will be 0 page(s) transmitted (SEE MESSAGE BELOW). If problems occur in transmission or all pages are not received, please contact us at 312-387-5853. If GM Network service is available, please use number 8-503-5853.

* * * * * * * * * * * * * * * * * * * * * * * * * * * * * * * * * * * * * * * * * * * *

Attn: Mr. Don Norwick

Dear Don:

The fuel consumption figures you have requested are as follows:

20-645E4
100° Air Inlet
29.35 IN.HG. Barometer
19450 BTU/LB - HHV

| eKW | LB/eKW-HR |
|---|---|
| 1250 | .595 |
| 1875 | .538 |
| 2600 | .525 |
| 2860 | .526 |
| 2950 | .529 |
| 3050 | .531 |

Very truly yours,
Randall Sowa
Randall Sowa
District Engineer
Power Products

:vad

Attachment 5, Page 1 of 1

DOCUMENT NO.: 9068-ES
APPENDIX: 2
PAGE: 1 OF 1

EMD FUEL OIL CHART

SECTION 5

## OPERATING COST FACTORS

FUEL OIL CHART

| | Gravity | | Density | Higher Heating Value | | Lower Heating Value | | Gravity |
|---|---|---|---|---|---|---|---|---|
| | Deg. A.P.I. at 60°F. | Specific at 60°/60°F. | Lb. per gal. | BTU/lb. | BTU/gal. | BTU/lb. | BTU/gal. | Deg. A.P.I. at 60°F. |
| | 25 | 0.9042 | 7.538 | 19,230 | 145,000 | 18,100 | 136,400 | 25 |
| | 26 | 0.8984 | 7.490 | 19,270 | 144,300 | 18,130 | 135,800 | 26 |
| | 27 | 0.8927 | 7.443 | 19,310 | 143,700 | 18,160 | 135,200 | 27 |
| Operating Range for EMD Engines | 28 | 0.8871 | 7.396 | 19,350 | 143,100 | 18,190 | 134,600 | 28 |
| | 29 | 0.8816 | 7.350 | 19,380 | 142,500 | 18,220 | 133,900 | 29 |
| | 30 | 0.8762 | 7.305 | 19,420 | 141,800 | 18,250 | 133,300 | 30 |
| | 31 | 0.8708 | 7.260 | 19,450 | 141,200 | 18,280 | 132,700 | 31 |
| | 32 | 0.8654 | 7.215 | 19,490 | 140,600 | 18,310 | 132,100 | 32 |
| | 33 | 0.8602 | 7.171 | 19,520 | 140,000 | 18,330 | 131,500 | 33 |
| | 34 | 0.8550 | 7.128 | 19,560 | 139,400 | 18,360 | 130,800 | 34 |
| | 35 | 0.8498 | 7.085 | 19,590 | 138,800 | 18,390 | 130,300 | 35 |
| | 36 | 0.8446 | 7.043 | 19,620 | 138,200 | 18,410 | 129,700 | 36 |
| | 37 | 0.8396 | 7.001 | 19,650 | 137,600 | 18,430 | 129,100 | 37 |
| | 38 | 0.8348 | 6.960 | 19,680 | 137,000 | 18,460 | 128,600 | 38 |
| | 39 | 0.8299 | 6.920 | 19,720 | 136,400 | 18,480 | 127,900 | 39 |
| | 40 | 0.8251 | 6.879 | 19,750 | 135,800 | 18,510 | 127,300 | 40 |
| | 41 | 0.8203 | 6.839 | 19,780 | 135,200 | 18,530 | 126,700 | 41 |
| | 42 | 0.8155 | 6.799 | 19,810 | 134,700 | 18,560 | 126,200 | 42 |
| | 43 | 0.8109 | 6.760 | 19,830 | 134,100 | 18,580 | 125,600 | 43 |
| | 44 | 0.8063 | 6.722 | 19,860 | 133,500 | 18,600 | 125,000 | 44 |

COST CONVERSION (Approximate)
30° A.P.I. FUEL

CENTS/MILLION BTU

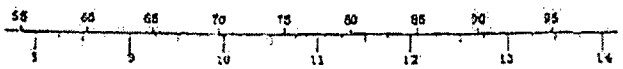


CENTS/GALLON

Based on Higher Heating Value of 30° A.P.I. gravity fuel of 141,800 BTU/Gal. (19,420 BTU/lb.). To obtain cost in Million BTU of other heat value fuels, divide BTU/Gal. into 1,000,000 and multiply by cost of fuel in cents per gallon.

8/67



SOURCE: EMD MP-45 DATA BOOK

Attachment 6, Page 1 of 1

2003 ASHRAE APPLICATIONS HANDBOOK



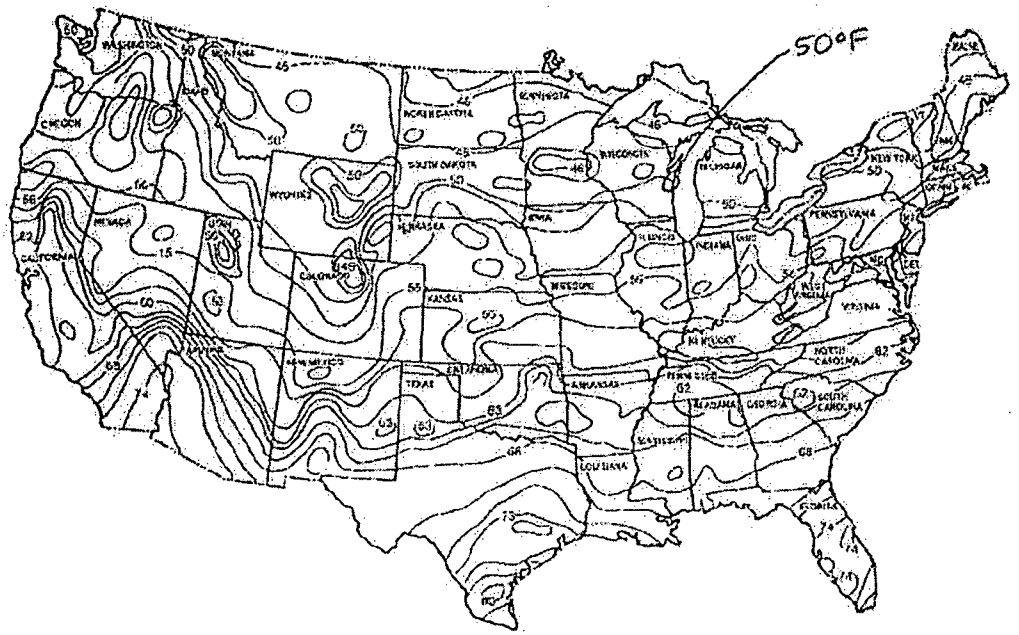


Fig. 18 Approximate Groundwater Temperatures (°F) in the Continental United States

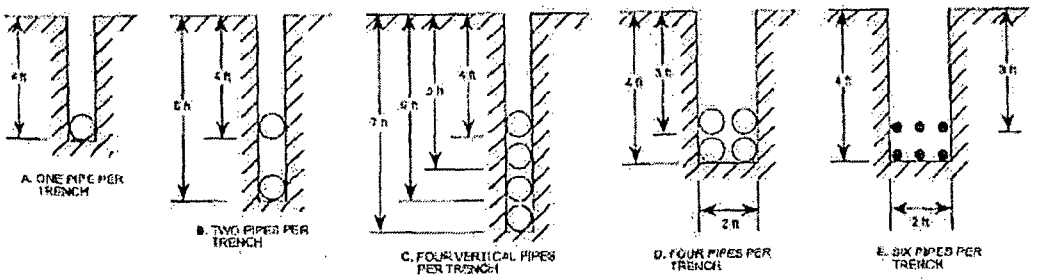


Fig. 19 Horizontal Ground Loop Configurations

Multiple pipes are often placed in a single trench to reduce the land area needed for horizontal loop applications. Some common multiple pipe arrangements are shown in Figure 19. When pipes are placed at two depths, the bottom row is placed first, and then the trench is partially backfilled before the upper row is put in place. Rarely are more than two layers of pipe used in a single trench because of the extra time needed for the partial backfilling. Higher pipe densities in the trench provide diminishing returns because thermal interference between multiple pipes reduces the heat transfer effectiveness of each pipe. The most common multiple-pipe applications are the two-pipe arrangement used with chain trenchers and the four- or six-pipe arrangements placed in trenches made with a wide backhoe bucket.

An overlapping spiral configuration, shown in Figure 20, has also been used with some success. However, it requires special

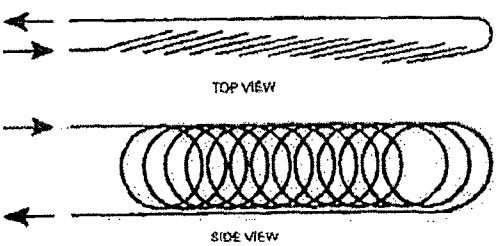


Fig. 20 General Layout of Spiral Earth Coil

Attachment 7, Page 1 of 1

# Pioneer Service & Engineering Co.

RIVERSIDE PLAZA BUILDING

2 NORTH RIVERSIDE PLAZA CHICAGO, ILLINOIS 60606

206

COPIES TO
RC Straub(2)
RL Hoffman
EW James
GM Meindl
RF Robl
REQ. 208
ACCOUNT
324-0-06-200

Plant Supt.
FW Hickey (2)
LCB, IEC, SL, PMK, RA, IN,
LEN, LFP, ML, DES, ACK, RWL,
FRP, CUL, GJD, VTN, GLM, AEW,
EJZ, JFB

FUEL OIL PUMPS

PROJECT 23-7127A Kewaunee Unit #1

Midstates Engineering & Sales, Inc.
Pump & Meter Division
8940 Ogden Avenue
Brookfield, Illinois
Attn: Mr. Bland

ORDER NO. K-208

DATE May 13, 1969

THIS REFERS TO

CONSIGN TO Wisconsin Public Service Corporation
Kewaunee Nuclear Power Plant Site
Ten miles south of Kewaunee, Wisconsin, on Highway 42
Kewaunee County, Wisconsin

MARK ALL TAGS, INVOICES, BILLS OF LADING, SHIPPING PAPERS AND PACKAGES WITH ABOVE ORDER NUMBER.

CHARGE TO Wisconsin Public Service Corporation, Wisconsin Power and Light Company, Madison Gas and Electric Company, sending invoices, bills of lading and shipping papers, IN TRIPLICATE, to Mr. R. L. Hoffman, Purchasing Agent, P. O. Box 751, Milwaukee, Wisconsin 53201; also one copy of all such papers to Mr. Frank Hickey, Field Project Manager, P. O. Box 209, Kewaunee, Wisconsin 54216.

AND SEND ONE COPY OF ALL PAPERS TO PIONEER SERVICE & ENGINEERING CO., PURCHASING ENGINEER, CHICAGO, ILL.

SHIPMENT REQUIRED: April 20, 1970 (NOT BEFORE)
PROMISED: As required

F. O. B. factory, freight allowed to plantsite.

TERMS Net 30 days

VIA TRUCK

PLEASE SIGN AND RETURN ATTACHED CARD IMMEDIATELY ACKNOWLEDGING RECEIPT.

| ITEM | QUANTITY | | PRICE |
|---|---|---|---|
| 1 | 2 | Bowser Model 564-1 (manufactured for Bowser, Inc. by Reda Pump Co.) submerged pump with a capacity of 30 GPM at 43' total head driven by 1/3 HP explosion proof, 460, 3 phase, 60 cycle motor for a 12' tank with a 3'6" burial. Net price each $345.00 | |
| | | TOTAL NET PRICE | $ 690.00 |

Attachment 8, Page 1 of 6

04/30/2008 Page 1

Dominion

*Document Header:*
*Document Type* PTE *Number* 10000001322 *Version* 01 *Part* 000

*Description* FUEL, DIESEL, AMOCO PREMIER ULTRA LOW SU
FUEL, DIESEL, AMOCO PREMIER ULTRA LOW SULFUR

*Status* AC - Active
*User* MICH826 - Michael D Mueller
*Valid From* *Authorization Group* CHEM

*Superior Document:*
*Document Type* *Number* *Version* *Part*

*Classification Data:*
*PE_INSPECTION_PLAN* 2300
*PE_MANUFACTURER* AMOCO
*PE_MARK_NUMBER* 134-031
134-032
*PE_NOTE_CODES* CHANGE/SUBSTITUTION*(F8)
COMMERCIAL GRADE*(F2)
*PE_QUAL_CLASS* SR
*PE_STATION* KEWAUNEE

*Status Log:*

| No. | Status | Description | Set By | Date | Time | Log Field |
|---|---|---|---|---|---|---|
| 0003 | AW | Awaiting Approve | ROB0054 | 04/30/2008 | 09:44:43 | AWAITING APP |
| 0002 | SE | Send to reviewer | MICH826 | 04/30/2008 | 09:44:13 | |
| 0001 | RE | Reserved | MICH826 | 04/30/2008 | 09:39:40 | |

*Material Links:*

| Material | Plant |
|---|---|
| 42106289 | KEWA |

*Revision Log*
*Version 01: Updated the L3 note by revising the phrase "FUELOIL SAMPLES*

*MUST HAVE A FLASH POINT GREATER THAN 130 DEGREES F (54 DEGREESC)" to "FUEL OIL SAMPLES MUST HAVE A FLASH POINT GREATER THAN OR EQUALTO 130 DEGREES F (54 DEGREES C)". Added "or equal to". This resolves SAP-Notification 200073169 and is an administrative change for clarification purposes only.*
*Version 00: PTE is being created for stock item 42106289.*

*Routing Notes*
*Revision Notes*
**********
*MICH826 03/28/2008 09:24:50 Second level review -REQUEST FORAPPROVAL*
**********
*PAUL008 03/28/2008 10:45:34 Approved by Paul Leslie*
*Revision Notes*
**********
*MICH826 04/30/2008 09:44:28 Second level review -REQUEST FORAPPROVAL*
**********
*ROB0054 04/30/2008 10:04:06 APPROVED RCM(487).*

*Note Codes*

*PRIOR TO FILLING, TRANSPORTERS AND HOSES ARE TO BE STEAMCLEANED AND DRIED. VENDOR SHALL PROVIDE DOCUMENTED EVIDENCE OF CLEANINGPRIOR TO OR WITH SHIPMENT. ALL HOSES TO BE USED FOR OFF LOAD SHALL BECAPPED TO PREVENT ROAD CONTAMINATES FROM ENTERING DURING TRANSIT.*

*BUYER RESERVES THE RIGHT OF ACCESS TO THE FOLLOWING:*
*1) SUPPLIERS FACILITIES.*
*2) PROCEDURES AND RECORDS.*
*3) SAMPLE DESIGNATED FUEL TANKS.*
*4) VERIFY CLEANLINESS OF TRANSPORTERS AND HOSES TO BE USED FOR OFF LOAD, PRIOR TO BEING FILLED.*

*AMOCO SHALL PROVIDE A COPY OF THE AMOCO LABORATORY SERVICESDIVISION'S ANALYSIS REPORT FOR PREMIER ULTRA LOW SULFUR DIESEL FUEL OFLAST SHIPMENT RECEIVED AT THE GREEN BAY FACILITY AT OR BEFOREDELIVERY.*

*THE DIESEL FUEL OIL SHALL BE SUPPLIED IN ACCORDANCE WITH THEFOLLOWING ANALYSIS, PROCEDURE AND LIMITS (REF: KEWAUNEE SP10-225):*
*ANALYSIS, STANDARD, LIMIT.*
*FLASH POINT, ASTM D93, 130 F MIN.*
*CLOUD POINT, ASTM D2500, 30 F MAX.*
*WATER AND SEDIMENT, ASTM D1796 OR D2709, 0.05% MAX.*
*CARBON RESIDUE, ASTM D189 OR D524, 0.35% MAX.*
*ASH WEIGHT, ASTM D482, 0.01% MAX.*
*DIST. TEMP. 90% PT., ASTM D86, 540 F MIN., 640 F MAX.*
*KINEMATIC VISCOSITY @ 40 C, ASTM D445, 1.9 CST. MIN., 4.1 CST.MAX.*
*SULFUR, ASTM D2622 OR D4294, 500 PPM MAX. OR ASTM D5453, 15 PPMMAX.*
*CORROSION, ASTM D130, NO. 3 MAX.*
*CETANE NUMBER, ASTM D976 OR D613, 40 MIN.*
*PARTICULATE CONTAMINATION, ASTM D2276, 10 MG/L MAX.*

*AN INLINE STRAINER WITH A MESH SIZE OF 0.25 INCHES OR LESSSHALL BE SUPPLIED BY VENDOR AND SHALL BE INSPECTED BY KPS PERSONNELPRIOR TO INSTALLATION. PRIOR TO UNLOADING OF THE DIESEL FUEL OIL, THE TRANSPORTER WILL BE SAMPLED BY THE BUYER'S CHEMISTRY DEPARTMENT. FUEL OIL SAMPLES MUST HAVE A FLASH POINT GREATER THAN OR EQUALTO 130 DEGREES F (54 DEGREES C), NO VISIBLE WATER AND SEDIMENT AND ASPECIFIC GRAVITY GREATER THAN OR EQUAL TO 0.835 (LESS THAN OR EQUAL TO38 DEG. API). THE ANALYSIS REPORT SHALL INCLUDE RESULTS FOR THE HIGHHEATING VALUE (HHV) AND SHALL BE WITHIN THE ACCEPTANCE CRITERIA OF137,000 BTU/GAL - 143,100 BTU/GAL. THE ANALYSIS REPORT SHALL ALSOINCLUDE RESULTS FOR THE HFRR TEST PER ASTM D6079 WITH AN ACCEPTANCECRITERIA OF 520 MICRONS MAXIMUM SCAR SIZE. VEGETABLE BASED FUELPRODUCTS/BLENDS WILL NOT BE ALLOWED. TALL OIL FATTY ACIDS, FATTY ACID METHYLESTER, DIMER ACIDS, OR OTHER ACIDIC ADDITITVES ARE NOT ALLOWED,PRODUCT DATA SHEETS SHALL BE PROVIDED FOR REVIEW. FAILURE TO MEET THESEREQUIREMENTS*

*WILL BE CAUSE TO REJECT THE SHIPMENT. DELIVERIES ARE TO BEMADE AT THE DIRECTION OF THE BUYER.*
*KEWAUNEE USE ONLY: BUYERS, CHEMISTRY, AND MATERIALSVERIFICATION LAB (MVL) SHALL BE NOTIFIED BY PURCHASING PRIOR TO SCHEDULINGDELIVERY OF FUEL OIL FOR THE EMERGENCY DIESEL GENERATORS. MVLANDCHEMISTRY SHALL BE NOTIFIED BY OPERATIONS, WAREHOUSE OR SECURITY GROUPS WHENTHE FUEL OIL TRANSPORTER/S ARRIVE ON SITE. PLANT CHEMISTRY GROUP SHALLSAMPLE*

*THE FUEL PER SP10-225. APPROVAL FROM THE CHEMISTRY AND MVLGROUPS IS REQUIRED PRIOR TO OFF LOADING. OFF LOADING SHALL BE AT THEDIRECTION OF THE PLANT OPERATIONS GROUP. PHONE NUMBERS - MVL 388-8579, PLANT CHEMISTRY SUPERVISOR 388-8370.*

Attachment 8, Page 4 of 6

Dominion

Procurement Technical Evaluation
Supply Chain Management

Page 1 of 3

**Section I: Host Equipment / System / Application**

Plant(s): ☒ KPS ☐ MPS ☐ NAPS ☐ SPS

Mark Number(s) (if generic, consider the most severe application): 134-031 and 134-032

Host Description: Emergency Diesel Generators

Host Function: Provide emergency electrical power for safety related loads on buses 5 and 6.

| Quality / Safety Classification: | SR ☒ | NSQ ☐ | NS ☐ |
|---|---|---|---|

Basis for Classification: PTE 92-0035, PTE 92-0174, PTE 06-0031

FSAR / UFSAR (Station(s) and applicable section(s): USAR Chapters 8 and 14

Technical Manual(s): VETIP 143-47

Specification(s): Tech Specs Section 3.7 and 4.6

Code(s)/Standard(s): DSGN CODE CLASS-NEMA, USASI, IEEE, NFPA, DEMA

| | | | |
|---|---|---|---|
| Seismic: | Yes ☒ | No ☐ | If Yes, Seismic Basis: Original POs and specifications and USAR Table B.2-1 |
| EQ: | Yes ☐ | No ☒ | If Yes, EQ Basis: |
| Appendix R: | Yes ☒ | No ☐ | If Yes, Appendix R Reference: Appendix R Design Description |

Other Reference(s): Technical Requirements Manual Section 3.7.1

Host Comments: N/A

**Section II: Item / Service Evaluated**

Item Description: 42106289 - Fuel, emergency diesel generators, (dyed product), AMOCO Premier Ultra Low Sulfur Diesel Fuel.

Item Function: Combustion provides motive force for generator.

Manufacturer / Part Number: AMOCO / By Description

| | | | | |
|---|---|---|---|---|
| Storage Level: | A ☐ | B ☐ | C ☐ | D ☒ |
| Shelf Life: | Yes ☐ | Time Frame: | Reference Doc: | No ☒ |

| | | | |
|---|---|---|---|
| Preventive Maintenance: | Yes ☐ | No ☒ | |
| Quality / Safety Classification: | SR ☒ | NSQ ☐ | NS ☐ |

Basis for Classification: PTE 92-0174

| | | | |
|---|---|---|---|
| Like-for-Like replacement: | Yes ☐ | No ☒ | If no, identify change document: PTE 92-0174 Rev. 17 |
| Seismic: | Yes ☐ | No ☒ | If different than host, basis must be provided: PTE 92-0174 Rev. 17. There has been no weight change. |

Attachment 8, Page 5 of 6

Dominion

Procurement Technical Evaluation
Supply Chain Management

Page 2 of 3

| | | | |
|---|---|---|---|
| EQ: | Yes ☐ | No ☒ | If different than host, basis must be provided: |
| Method(s) to assure item received is the item specified: (Mark all applicable) | ☐ Vendor Audit (SRVL)<br>☐ Vendor Documentation<br>☐ Source Surveillance / Inspection (Vendor Surveillance)<br>☒ Special or Post Installation Test<br>☒ Receipt Inspection<br>☐ Commercial Grade Survey (CGVL) | | |
| **Section III: Commercial Grade Item Evaluation (CGIE)** | | | |
| Is a CGIE required with this PTE: | Yes ☒ | No ☐: If No, the remainder of this PTE is not applicable. | |
| Host Equipment safety function and quality assurance definition / code: Same as host function in Section I. | | | |
| Item Safety Function (Important in determining both critical characteristics for design and acceptance.): Same as host function in Section I. | | | |
| **Dedication:** CGI acceptance method(s) used to verify critical characteristics of item: (Mark all applicable) | ☒ Method 1 – Special test(s) and inspection(s)<br>☐ Method 2 – Commercial Grade Survey of Supplier<br>☐ Method 3 – Source Verification<br>☐ Method 4 – Supplier/Item Performance Record | | |
| Operating Experience (OE) Review: (Search and review of applicable data to the CGIE)<br><br>Search criteria: diesel fuel, low sulfur diesel, Electro Motive, diesel generator, AMOCO<br><br>Results and Source: ☒ NRC* ☒ INPO* ☐ OTHER (Applicable data may be attached to this evaluation): NRC Informational Notice 2006-22, EMD Service Advisory # 06-025, INPO OE21698, INPO OE17596<br>Note: *Review required, as a minimum. | | | |

Attachment 8, Page 6 of 6

Dominion

Procurement Technical Evaluation
Supply Chain Management

Page 3 of 3

CGIE Comments: (Explain how the Inspection Plan verifies critical characteristics for acceptance and relates to the item safety function.)

Reference PTE 92-0174 and Inspection Plan 2300:

Markings: The AMOCO Lab Services Analysis Report shall accompany shipment for identification. This critical characteristic verifies flash point, cloud point, water and sediment, carbon residue, ash weight, distillation temperature, kinematic viscosity, sulfur, copper strip corrosion, cetane number, and particulate contamination.

Flash Point, Contaminants, and Specific Gravity: These critical characteristics are all tested and verified per the Chemistry group.

Fuel Oil Content and Ignition Properties: These critical characteristics are all tested and verified by an independent lab.

These critical characteristics ensure that the diesel fuel meets the design requirements for the emergency diesel generators and the limits set by the Diesel Generator group per KPS procedure SP-10-225. The critical characteristics meet the guidelines provided by the EPRI CGI JUTG evaluation for diesel fuel oil, TE Number CGIDF01.

Upon successful completion of the inspection plan, reasonable assurance is obtained that the item specified is that received, and will perform its intended safety function. Dominion, therefore, assumes 10 CFR 21 reporting responsibility.

**Section IV: Attachments**

List attachments to this evaluation: N/A

Attachment 9, Page 1 of 4



DATE PERFORMED 2/17/05 INITIALS

6.6 LA-16635 Calibration

***Note***

*Use Figure 1 on page 5 for valve locations.*

6.6.1 Isolate LA-16635:

6.6.1.1 Close valve FO-16635-1. BJ

6.6.1.1 Close valve FO-16635-2. BJ

6.6.2 Open valve FO-16635-3. BJ

6.6.3 At valve FO-16635-3, remove the pipe cap. BJ

6.6.4 At valve FO-16635-4, remove the pipe cap BJ

6.6.5 At valve FO-16635-4, connect a site tube and drain assembly. BJ

6.6.6 At LA-16635 output terminals, connect a DC voltmeter. BJ

6.6.7 Open valve FO-16635-4. BJ

6.6.8 Using Table 6-4, perform a calibration test of LA-16635. BJ

Table 6-4

| DG Fuel Oil Day Tank A Level Low | | | | 16635 |
|---|---|---|---|---|
| Test Tee | | | Output (inches)* | Accuracy: ± 2 inches |
| SETPOINT | DESIRED | AS FOUND | ACCEPTANCE RANGE | FINAL |
| Set (inches) ↓ | 137" | 136 3/4 | 135" to 139" | 136 3/4 |
| Reset (inches) | N/A | 137 1/2 | Info only | 137 1/2 |
| M&TE ID | DESCRIPTION | | | |
| | N/A | | | |

* *Referenced to floor elevation 585'0"*

6.6.9 Verify annunciator (43093C) "DIESEL GEN A FUEL OIL LEVEL ABNORMAL" alarms at setpoint. BJ

| WISCONSIN PUBLIC SERVICE CORP. | No. SP-10-181 | Rev. R |
|---|---|---|
| Kewaunee Nuclear Power Plant | Title Diesel Generator Fuel Oil Day Tanks 1A1/1A2 Differential Pressure Indicator and Level Switches Calibration | |
| *Surveillance Procedure* | Date AUG 30 2005 | Page 11 of 17 |

DATE PERFORMED JAN 16 2007 INITIALS

6.5 LA-16635 Calibration

***Note***

*Use Figure 1 on page 5 for valve locations.*

6.6.1 Isolate LA-16635:

6.6.1.1 Close valve FO-16635-1. JP

6.6.1.1 Close valve FO-16635-2. JP

6.6.2 Open valve FO-16635-3. JT

6.6.3 At valve FO-16635-3, remove the pipe cap. JT

6.6.4 At valve FO-16635-4, remove the pipe cap JT

6.6.5 At valve FO-16635-4, connect a site tube and drain assembly. JT

6.6.6 At LA-16635 output terminals, connect a DC voltmeter. JT

6.6.7 Open valve FO-16635-4. JT

6.6.8 Using Table 6-4, perform a calibration test of LA-16635. JT

Table 6-4

| DG Fuel Oil Day Tank A Level Low | | | | 16635 |
|---|---|---|---|---|
| Test Tee | | | Offset (Inches)* | Accuracy: ± 2 Inches |
| SETPOINT | DESIRED | AS FOUND | ACCEPTANCE RANGE | FINAL |
| Set (Inches) ↓ | 137" | 136½ | 136" to 139" | 136½ |
| Reset (Inches) | N/A | 137¼ | Info only | 137¼ |
| MATE ID | DESCRIPTION | | | |
| | N/A | | | |

* Referenced to floor elevation 585'0"

6.6.9 Verify annunciator (47093C) "DIESEL GEN A FUEL OIL LEVEL ABNORMAL" alarms at setpoint. JT

Attachment 9, Page 3 of 4

| WISCONSIN PUBLIC SERVICE CORP. | No. SP-10-179 | Rev. 0 |
|---|---|---|
| Kewaunee Nuclear Power Plant | Title Diesel Generator Fuel Oil Day Tanks 1B1/1B2 Differential Pressure Indicator and Level Switches Calibration | |
| Surveillance Procedure | Date FEB 8 2005 | Page 10 of 16 |

DATE PERFORMED 7-06-05 INITIALS

6.6 LA-16637 Calibration

***Note***

*Use Figure 1 on page 5 for valve locations.*

6.6.1 Isolate LA-16637:

6.6.1.1 Close valve FO-16637-1. RD

6.6.1.1 Close valve FO-16637-2. RD

6.6.2 Open valve FO-16637-3. RD

6.6.3 At valve FO-16637-3, remove the pipe cap. ✓

6.6.4 At valve FO-16637-4, remove the pipe cap. ✓

6.6.5 At valve FO-16637-4, connect a site tube and drain assembly. ✓

6.6.6 At LA-16637 output terminals, connect a DC voltmeter. RD

6.6.7 Open valve FO-16637-4. ✓

6.6.8 Using Table 6-4, perform a calibration test of LA-16637. ✓

Table 6-4

| DG Fuel Oil Day Tank B Level Low | | | | 16637 |
|---|---|---|---|---|
| Test Tee | | | Output (Inches)* | Accuracy: ± 2 Inches |
| SETPOINT | DESIRED | AS FOUND | ACCEPTANCE RANGE | FINAL |
| Set (Inches) ↓ | 137" | 137" | 135" to 139" | 137" |
| Reset (Inches) | N/A | 138" | Info only | 138" |
| M&TE ID | DESCRIPTION | | | |
| | N/A | | | |

* Referenced to floor elevation 585'-9"

6.6.9 Verify annunciator (47093F) "DIESEL GEN B FUEL OIL LEVEL ABNORMAL" alarms at setpoint. ✓

CONTINUOUS USE

Attachment 9, Page 4 of 4

| WISCONSIN PUBLIC SERVICE CORP. | No. SP-10-179 | Rev: P |
|---|---|---|
| Kewaunee Nuclear Power Plant | Title: Diesel Generator Fuel Oil Day Tanks 1B1/1B2 Differential Pressure Indicator and Level Switches Calibration | |
| *Surveillance Procedure* | Date AUG 30 2005 | Page 11 of 17 |

DATE PERFORMED 10-14-06 INITIALS

6.6 LA-16637 Calibration

**Note**

*Use Figure 1 on page 5 for valve locations.*

6.6.1 Isolate LA-16637:

6.6.1.1 Close valve FO-16637-1. JR

6.6.1.1 Close valve FO-16637-2. JR

6.6.2 Open valve FO-16637-3. JR

6.6.3 At valve FO-16637-3, remove the pipe cap. JR

6.6.4 At valve FO-16637-4, remove the pipe cap. JR

6.6.5 At valve FO-16637-4, connect a site tube and drain assembly. JR

6.6.6 At LA-16637 output terminals, connect a DC voltmeter. JR

6.6.7 Open valve FO-16637-4. JR

6.6.8 Using Table 6-4, perform a calibration test of LA-16637. JR

Table 6-4

| DG Fuel Oil Day Tank B Level Low | | | | 16637 |
|---|---|---|---|---|
| Test Tee | | | Output (inches)* | Accuracy: ± 2 inches |
| SETPOINT | DESIRED | AS FOUND | ACCEPTANCE RANGE | FINAL |
| Set (inches) ↓ | 137" | 137 | 135" to 139" | 137 |
| Reset (inches) | N/A | 137¼ | Info only | 137¼ |
| M&TE ID | DESCRIPTION | | | |
| | N/A | | | |

* Referenced to floor elevation 585'0"

6.6.9 Verify annunciator (47093F) "DIESEL GEN B FUEL OIL LEVEL ABNORMAL" alarms at setpoint. JR

CONTINUOUS USE

# ENCLOSURE 3

## SUPPLEMENT 2 TO LICENSE AMENDMENT REQUEST 247: EMERGENCY DIESEL GENERATOR FUEL OIL TECHNICAL SPECIFICATION CHANGES

## FUEL OIL SYSTEM DRAWINGS

KEWAUNEE POWER STATION
DOMINION ENERGY KEWAUNEE, INC.

A-203

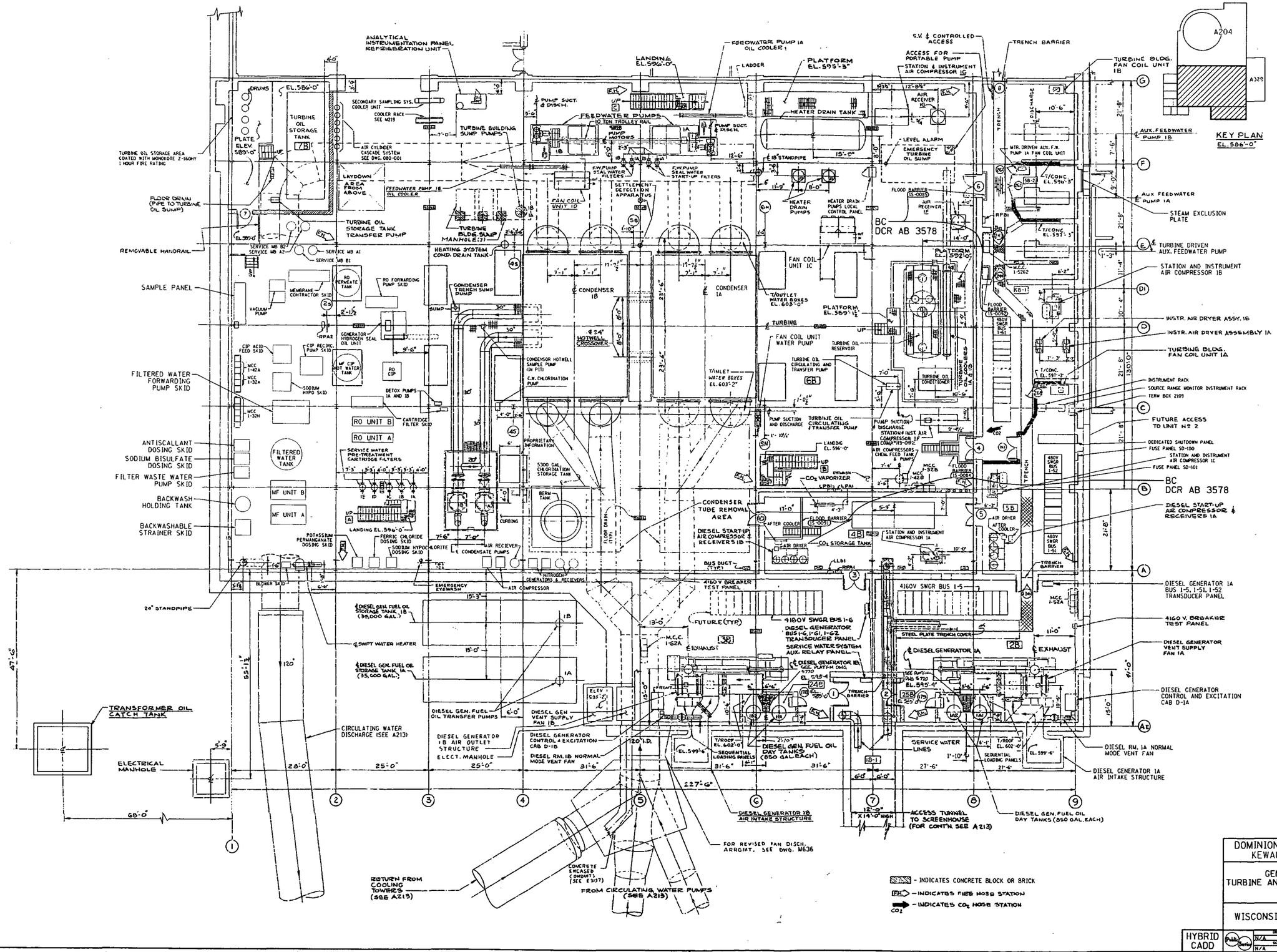


| REVISION |
|---|
| A0 DCR 2365 COMP SEE REV AP-1 FILM'D: WPS 7-13-93 |
| A0-1 DCR 2513 AT DWG CO-ORD B-9 REMOVED AIR COMPRESSOR 1D. RENAMED AIR RECEIVER. BY: PGD 4-6-94 CHK'D: RJS 4-6-94 APP'D: EAL 4-18-94 |
| AR DCR 2513 COMPL. SEE REV. A0-1 FLM'D: (WPS) 4-26-94 |
| AR-1 ADDED SECURED BARRIER TO DOOR 411. PER DCR AB 2748 BY: TRR 10-17-94 CHK'D: GJS 10-20-94 APP'D: MSH 10-24-94 |
| AS DCR 2748 COMP SEE REV. AR-1 FLM'D: WPS 11-1-94 |
| AS-1 RE PUR 0296 DRAWING SCANNED TO CADD BY: JB 03-27-00 APP'D: DAK 06-02-00 |
| AT RE PUR 0296 COMPLETE SEE REV. AS-1 FILMED: (WPS) 06-06-00 |
| AT-1 DCR AB 3178 ADDED NOTE BY: NTH 04-27-01 APP'D: SP 05-03-01 |
| AU DCR AB 3178 COMPL. COMPLETE SEE REV. AT-1 FILMED: (WPS) 05-08-01 |
| AU-1 DCR AB 3372 ADDED IN-PLANT OFFICE. BY: PJB 08/11/04 APP'D: RRG 08/12/04 |
| AV DCR AB 3372 COMPL. SEE REV. AU-1 FILMED: (WPS) 08/17/04 |
| AV-1 DCR AB 3373 REMOVED DOOR 411. ADD STEAM EXCLUSION PLATE. BY: SMJ 09-12-02 APP'D: RRG 09/22/04 |
| AW DCR AB 3373 COMPL COMPLETE SEE REV. AU-1 FILMED: (WPS) 10/12/04 |
| AX PTE 98-0030 REVISED CHLORINATION STORAGE TANK CAPACITY. DRF'D: NTH 01-20-06 APP'D: MM 01-24-06 |
| AX PTE 98-0030 COMPLETE. SEE REVISION AX-1. FILMED: 02-07-06 |
| AY DCR AB 3578 ADDED FLOOD BARRIERS. DRF'D: NTH 07-31-06 APP'D: BJD 08-02-06 |
| AY DCR AB 3578 COMPLETE. SEE REVISION AY-1. FILMED: 08-08-06 |
| AZ CAP 031718 MOVED HOSE STATION TO CORRECT LOCATION. DRF'D: JBS 04-27-07 APP'D: JFH 05-10-07 |
| AZ CAP 031718 COMPLETE SEE REVISION AZ-1. FILMED: 05-15-07 |
| BA DCR 3484 REMOVED SWPT EQUIPMENT. DRF'D: NTH 02-16-05 APP'D: SJP 06-13-07 FILMED: 06-26-07 |
| BB DCR AB 3484-2 ADDED GENERAL ARRANGEMENT OF SWPT EQUIPMENT. DRF'D: AMM 09-02-08 APP'D: AJP 09-17-08 |
| BC DCR AB 3578 ADDED EQUIPMENT NUMBERS TO FLOOD BARRIERS. DRF'D: NTH 11-04-08 APP'D: PCM 11-13-08 |

A-203

DOMINION ENERGY KEWAUNEE, INC.
KEWAUNEE POWER STATION

GENERAL ARRANGEMENT
TURBINE AND ADMINISTRATION BUILDING
BASEMENT FLOOR

DESIGNED BY
WISCONSIN PUBLIC SERVICE CORP.
GREEN BAY, WISCONSIN

HYBRID CADD

| SHEET | N/A | DWG. NO. | REV. |
|---|---|---|---|
| SCALE | N/A | A-203 | BC |

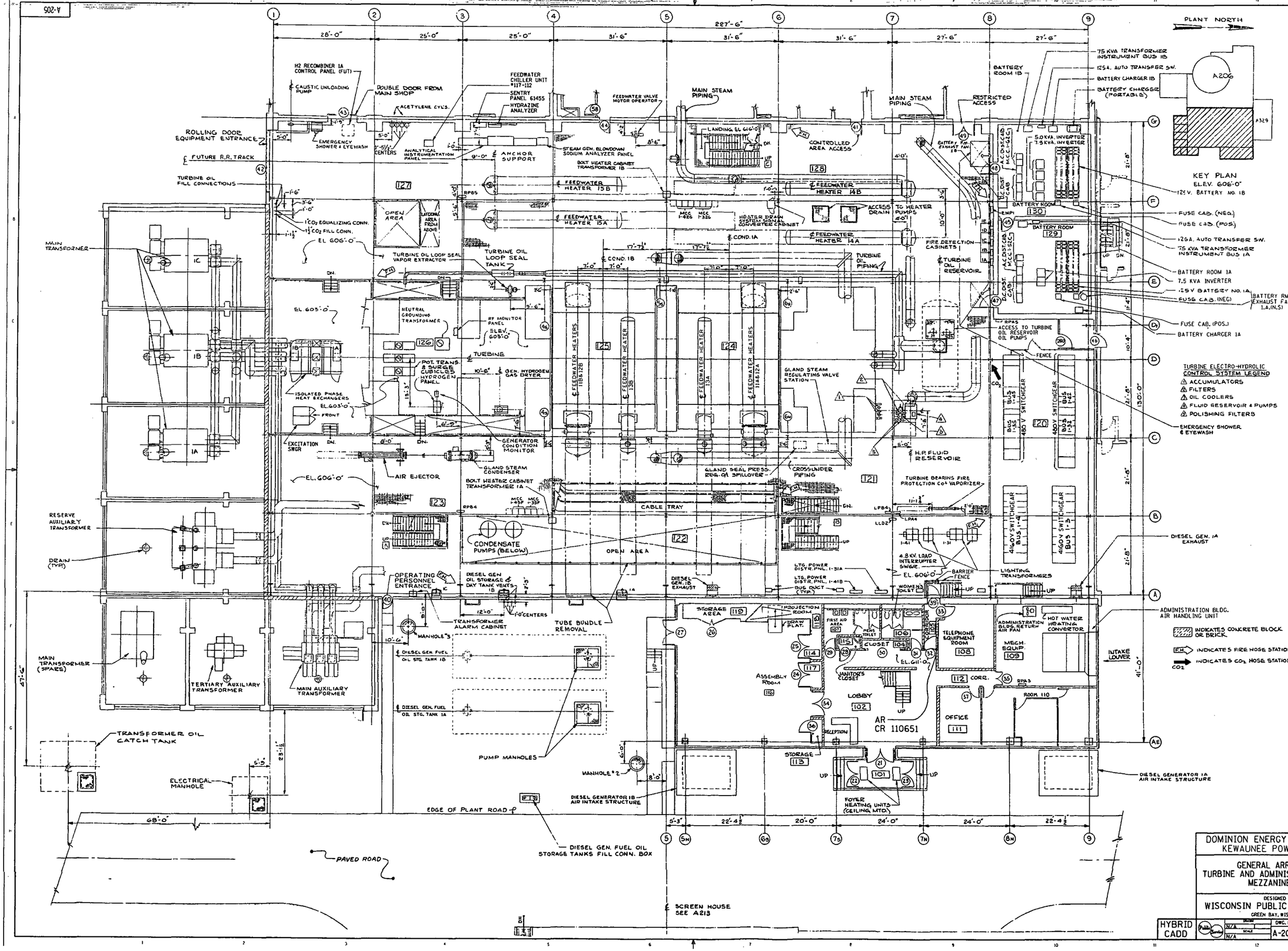


| REVISION |
|---|
| AE DCR AB 2691 COMP SEE REV AD-2 FILMD: WPS 10-12-93 |
| AE-1 ADDED BARRIER AT DOOR 35. PER DCR AB 2748 BY: TPR 10-17-94 CHK'D: GJS 10-20-94 APP'D: MSH 11-23-94 |
| AG DCR 2748 COMP SEE REV. AF-1 FILM'D: WPS 11-1-94 |
| AG-1 ADDED FIRST AID AREA AT A-7a PER DCR 2664 BY: DPG 5-16-95 CHK'D: BCY 5-16-95 APP'D: MC 5-30-95 |
| AH DCR 2664 COMPL SEE REV. AG-1 FILM'D: WPS 6-6-95 |
| AH-1 DRAWING SCANNED TO CADD BY: JB 03-17-00 APP'D: DAK 06-09-00 |
| AJ RE PUR 0296 COMPLETE SEE REV. AH-1 FILMED: WPS 06-13-00 |
| AJ-1 DCR 3203 ADDED FEEDWATER CHILLER #117-112, PANEL #61455 AND HYDRAZINE ANALYZER. BY: SMJ 05-02-01 APP'D: EES 04-03-02 |
| AK DCR 3203 COMPL. SEE REVISION AJ-1. FILMED: WPS 04-09-02 |
| AK-1 DCR 3454 ADDED "ABANDONED" NOTE TO B & A BATTERY MONITORS. BY: PJB 05/05/04 APP'D: LWK 05/12/04 |
| AL DCR 3454 COMPL. SEE REV. AK-1 FILMED: WPS 05/25/04 |
| AL-1 DCR AB 3373 REMOVED DOOR 90, ADDED CONC. WALL TO REFLECT WHAT'S IN THE FIELD. BY: SMJ 09-13-02 APP'D: RRG 09/22/04 |
| AM DCR AB 3373 COMPL. SEE REVISION AK-1. FILMED: WPS 10/12/04 |
| AM-1 DCR 3448 REPLACED ADMIN. BLDG. AIR CONDITIONING UNIT WITH NEW AIR HANDLING UNIT. DRFT'D: SAS 08/31/05 APP'D: TFR 09-07-05 |
| AN DCR AB 3448 COMPL. SEE REVISION AM-1. FILMED: 10-04-05 |
| AN-1 DCR AB 3527 ADDED FENCING. DRFT'D: NTH 09-22-06 APP'D: JND 11-17-06 |
| AP DCR AB 3527 COMPL. SEE REVISION AN-1. FILMED: 12-19-06 |
| AQ DCR 3687 REMOVED BRA-125 AND BRB-125 FROM BATTERY ROOM "A" AND "B". DRFT'D: APK 04-23-08 APP'D: GJV 04-23-08 |
| AR CR 110651 REMOVED DOOR 32. REFERENCE CA 84691. DRFT'D: NTH 09-30-08 APP'D: WJR 10-03-08 |

A-205

DOMINION ENERGY KEWAUNEE, INC.
KEWAUNEE POWER STATION

GENERAL ARRANGEMENT
TURBINE AND ADMINISTRATION BUILDING
MEZZANINE FLOOR

DESIGNED BY
WISCONSIN PUBLIC SERVICE CORP.
GREEN BAY, WISCONSIN

| HYBRID CADD | DRAWN N/A | SCALE N/A | DWG. NO. A-205 | SHT 3 OF 11 | REV. AR |
|---|---|---|---|---|---|

E-1622

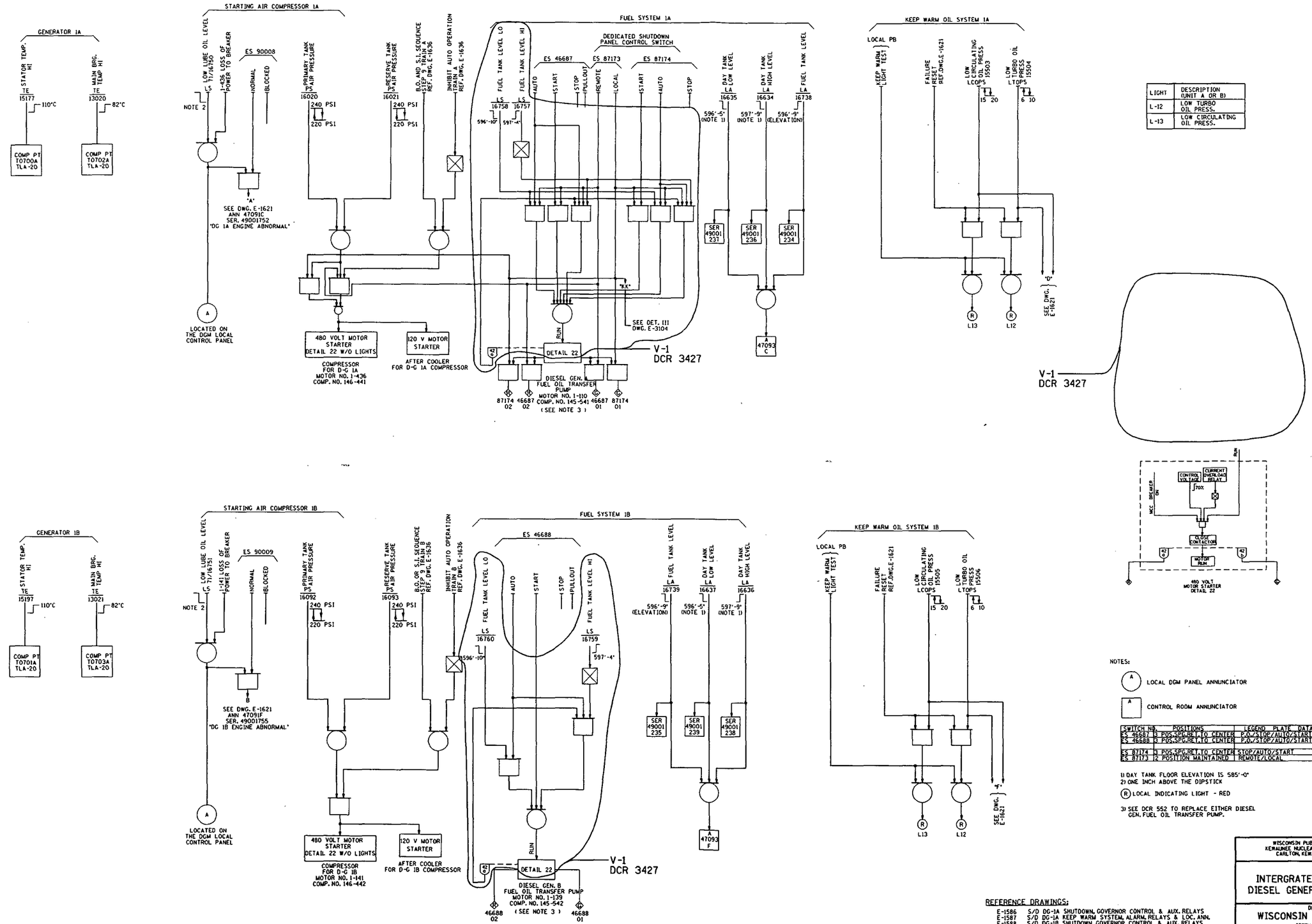


| LIGHT | DESCRIPTION (UNIT A OR B) |
|---|---|
| L-12 | LOW TURBO OIL PRESS. |
| L-13 | LOW CIRCULATING OIL PRESS. |

NOTES:

(A) LOCAL DGM PANEL ANNUNCIATOR

[A] CONTROL ROOM ANNUNCIATOR

| SWITCH NO. | POSITIONS | LEGEND PLATE DATA |
|---|---|---|
| ES 46687 | 3 POS.SPG.RET.TO CENTER | P.O./STOP/AUTO/START |
| ES 46688 | 3 POS.SPG.RET.TO CENTER | P.O./STOP/AUTO/START |
| ES 87174 | 3 POS.SPG.RET.TO CENTER | STOP/AUTO/START |
| ES 87173 | 2 POSITION MAINTAINED | REMOTE/LOCAL |

1) DAY TANK FLOOR ELEVATION IS 585'-0"
2) ONE INCH ABOVE THE DIPSTICK

(R) LOCAL INDICATING LIGHT - RED

3) SEE DCR 552 TO REPLACE EITHER DIESEL GEN. FUEL OIL TRANSFER PUMP.

REFERENCE DRAWINGS:

| | |
|---|---|
| E-1586 | S/D DG-1A SHUTDOWN, GOVERNOR CONTROL & AUX. RELAYS |
| E-1587 | S/D DG-1A KEEP WARM SYSTEM, ALARM, RELAYS & LOC. ANN. |
| E-1588 | S/D DG-1B SHUTDOWN, GOVERNOR CONTROL & AUX. RELAYS |
| E-1589 | S/D DG-1B KEEP WARM SYSTEM, ALARM, RELAYS & LOC. ANN. |
| E-1584 | S/D DG-1A EXCITATION & CONTROL |
| E-1585 | S/D DG-1B EXCITATION & CONTROL |
| E-2022 | L/D DIESEL GENERATOR ELECTRIC |
| E-1621 | L/D DIESEL GENERATOR MECH. SYSTEM |

REVISION

| | |
|---|---|
| U | DCR 552 COMPL. SEE REV. T-1 FILMED:(WPS) 10/24/95 |
| U-1 | PDR 0155 ADDED REFERENCE DRAWINGS. CHANGED LUBE OIL LEVEL TO LOW LUBE OIL LEVEL AT STARTING AIR COMPRESSOR 1A & 1B. BY: LAH 12-18-97 APP'D: SP 12-18-97 |
| V | PDR 0155 COMPL. SEE REV. U-1 FILMED:(WPS) 12-23-97 |
| V-1 | DCR 3427 REVISED WIRING ON FUEL SYSTEM 1A & 1B AND DRFT'D: NTH 05-28-05 APP'D: DEA 06-11-05 |
| W | DCR 3427 COMPLETE. SEE REVISION V-1. FILMED: 04-18-06 |
| N-1 | DCR 2481 REVISED ANNUNCIATOR INFO. LEEDING TO GENERATORS 1A & 1B. BY: KFJ 06-05-91 CHK'D: JJM 06-06-91 |
| P | DCR 2481 COMPL. SEE REV. N-1 APP'D: EES 07-29-91 FILMED:(WPS) 08-06-91 |
| P-1 | DCR 1885 REVISED INFO. FOR FUEL SYSTEM 1A & 1B (LOC. AT C-5 & H-5) BY: KFJ 08-09-91 CHK'D: JJM 08-09-91 |
| O | DCR 1885 COMPL. SEE REV. P-1 APP'D: DWM 09-09-91 FILMED:(WPS) 09-17-91 |
| O-1 | REVISED ELEV. AT NOTE 1, 585'-0" WAS 585'-10" PER RE PUR 0101 BY: LAH 3-9-92 CHK'D: JJM 3-10-92 APP'D: PCM 3-30-92 |
| R | RE PUR 0101 COMPL. SEE REV. O-1 FILMED:(WPS) 4-7-92 |
| R-1 | ADDED FAILURE RESET LOGIC TO IND. LIGHTS L12, L13 OF KEEP WARM OIL SYS 1A/1B; INST. NO. 16750 & 16751 PER PDD-0051. DWG WAS REVISED UNDER THE ELECTRICAL DWG QUALITY BASELINE PROJECT SARGENT & LUNDY BY: VF 07-09-92 CHK'D: RRP 07-16-92 APP'D: JDR 07-16-92 INFO TRANSFERED BY WPS FROM SARGENT & LUNDY ANN. NOS. TO STARTING AIR COMPRESSOR 1A & 1B WERE 4702921 & 4703125 PER PDD 0051 BY: LAH 07-02-93 CHK'D: RJS 07-02-93 APP'D: PCM 7-6-93 |
| S | PDD 0051 COMPL. SEE REV. R-1 FILMED:(WPS) 7-13-93 |
| S-1 | REVISED DESCRIPTION OF LIGHTS L-12 & L-13. PER DCR 1461 BY: DDG 05-09-94 CHK'D: RJS 05-09-94 APP'D: SAJ 05-23-94 |
| T | DCR 1461 COMPL. SEE REV. S-1 FILMED:(WPS) 06-07-94 |
| T-1 | ADDED NOTE 3 PER DCR 552 BY: DDG 01-25-95 CHK'D: DDG 01-25-95 APP'D: GJV 10/10/95 |

E-1622

WISCONSIN PUBLIC SERVICE CORPORATION
KEWAUNEE NUCLEAR POWER PLANT - UNIT NO. 1
CARLTON, KEWAUNEE COUNTY, WISCONSIN

# INTERGRATED LOGIC DIAGRAM DIESEL GENERATOR MECH. SYSTEM

DESIGNED BY
WISCONSIN PUBLIC SERVICE CORP.
GREEN BAY, WISCONSIN

| | | | |
|---|---|---|---|
| DRAWN | | DESIGNED | AED |
| | | | |
| SCALE | | CHECKED | |
| | | | |
| APPROVED | | PROJ. & DWG. NO. | SHT OF |
| | | E-1622 | W |

CADD

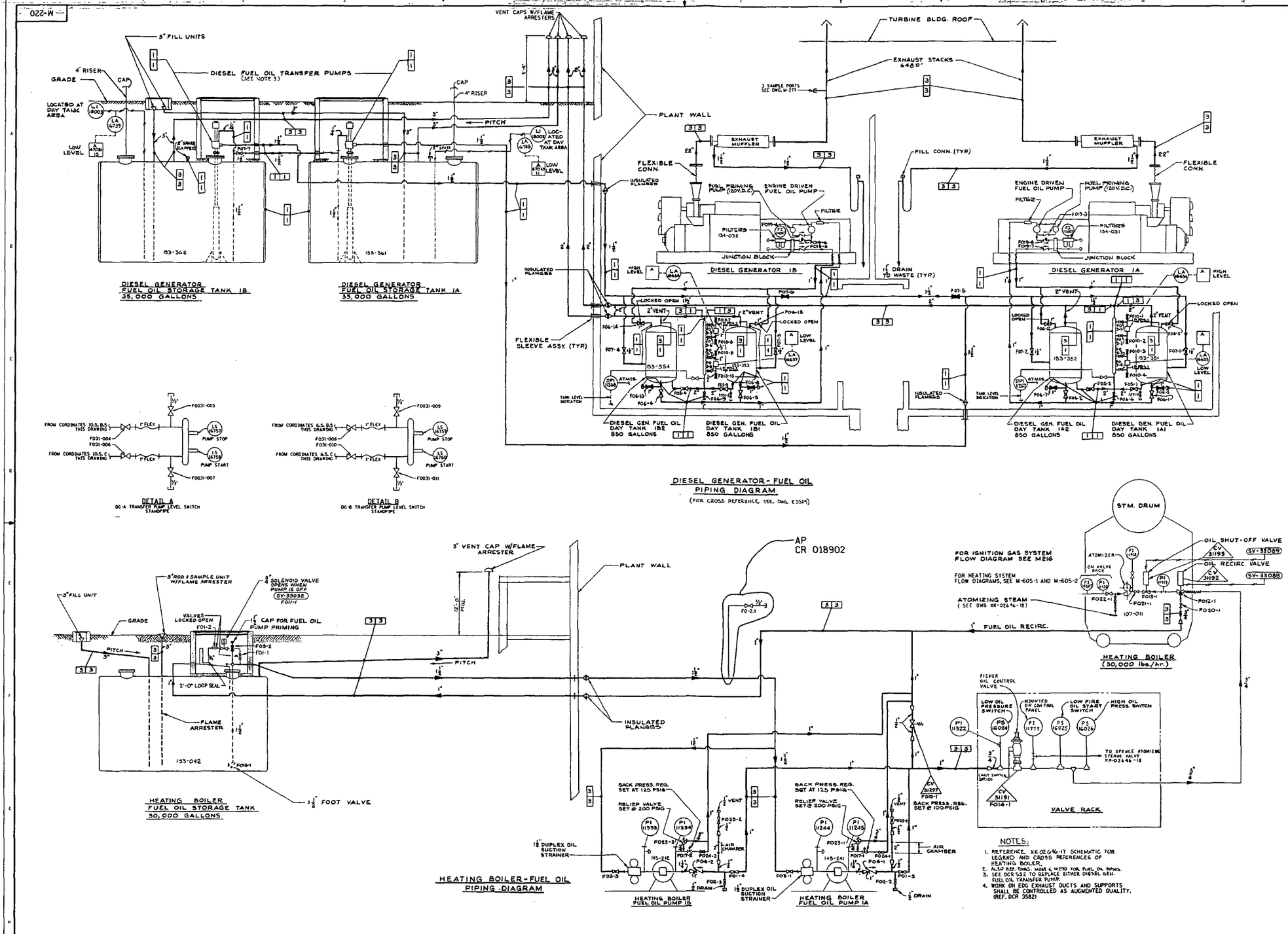
M-220
5" FILL UNITS
4" RISER
GRADE
CAP
DIESEL FUEL OIL TRANSFER PUMPS (SEE NOTE 3)
LOCATED AT DAY TANK AREA
LOW LEVEL
PITCH
VENT CAPS W/FLAME ARRESTERS
TURBINE BLDG. ROOF
EXHAUST STACKS 648'0"
3 SAMPLE PORTS SEE DWG. M-271
PLANT WALL
EXHAUST MUFFLER
FLEXIBLE CONN.
INSULATED FLANGES
FILL CONN. (TYP.)
FUEL PRIMING PUMP (120V.D.C.)
ENGINE DRIVEN FUEL OIL PUMP
FILTER
FILTERS 134-032
FILTERS 134-031
JUNCTION BLOCK
DIESEL GENERATOR 1B
DIESEL GENERATOR 1A
DRAIN TO WASTE (TYP.)
HIGH LEVEL
LOW LEVEL
LOCKED OPEN
2" VENT
FLEXIBLE SLEEVE ASSY. (TYP.)
TANK LEVEL INDICATION
DIESEL GEN. FUEL OIL DAY TANK 1B2 850 GALLONS
DIESEL GEN. FUEL OIL DAY TANK 1B1 850 GALLONS
DIESEL GEN. FUEL OIL DAY TANK 1A2 850 GALLONS
DIESEL GEN. FUEL OIL DAY TANK 1A1 850 GALLONS
153-362
153-361
DIESEL GENERATOR FUEL OIL STORAGE TANK 1B 35,000 GALLONS
DIESEL GENERATOR FUEL OIL STORAGE TANK 1A 35,000 GALLONS
DIESEL GENERATOR - FUEL OIL PIPING DIAGRAM
(FOR CROSS REFERENCE, SEE DWG. E3329)
DETAIL A
DG-A TRANSFER PUMP LEVEL SWITCH STANDPIPE
DETAIL B
DG-B TRANSFER PUMP LEVEL SWITCH STANDPIPE
FROM CORDINATES 10.5, B.5 THIS DRAWING
FROM CORDINATES 10.5, C THIS DRAWING
FROM CORDINATES 6.5, B.5 THIS DRAWING
FROM CORDINATES 6.5, C THIS DRAWING
1" FLEX
PUMP STOP
PUMP START
3" FILL UNIT
3" ROD & SAMPLE UNIT W/FLAME ARRESTER
3/4" SOLENOID VALVE OPENS WHEN PUMP IS OFF SV-33032 F011-1
VALVES LOCKED OPEN
1 1/2" CAP FOR FUEL OIL PUMP PRIMING
2'-0" LOOP SEAL
FLAME ARRESTER
153-042
1 1/2" FOOT VALVE
HEATING BOILER FUEL OIL STORAGE TANK 30,000 GALLONS
3" VENT CAP W/FLAME ARRESTER
12'-0" FILL
AP CR 018902
FOR IGNITION GAS SYSTEM FLOW DIAGRAM SEE M216
FOR HEATING SYSTEM FLOW DIAGRAMS, SEE M-605-1 AND M-605-2
ATOMIZING STEAM (SEE DWG XK-02646-18)
FUEL OIL RECIRC.
STM. DRUM
ATOMIZER
ON VALVE RACK
OIL SHUT-OFF VALVE
OIL RECIRC. VALVE
SV-33089
HEATING BOILER (30,000 lbs./hr.)
FISHER OIL CONTROL VALVE
LOW OIL PRESSURE SWITCH
MOUNTED ON CONTROL PANEL
LOW FIRE OIL START SWITCH
HIGH OIL PRESS. SWITCH
TO SPENCE ATOMIZING STEAM VALVE XK-02646-18
LIMIT SWITCH
VALVE RACK
BACK PRESS. REG. SET AT 125 PSIG
RELIEF VALVE SET @ 200 PSIG
BACK PRESS. REG. SET @ 100 PSIG
AIR CHAMBER
1 1/2" DUPLEX OIL SUCTION STRAINER
DRAIN
HEATING BOILER FUEL OIL PUMP 1B
HEATING BOILER FUEL OIL PUMP 1A
HEATING BOILER - FUEL OIL PIPING DIAGRAM
NOTES:
1. REFERENCE XK-02646-17 SCHEMATIC FOR LEGEND AND CROSS REFERENCES OF HEATING BOILER.
2. ALSO REF. DWGS. M268 & M270 FOR FUEL OIL PIPING.
3. SEE DCR 532 TO REPLACE EITHER DIESEL GEN. FUEL OIL TRANSFER PUMP.
4. WORK ON EDG EXHAUST DUCTS AND SUPPORTS SHALL BE CONTROLLED AS AUGMENTED QUALITY. (REF. DCR 3582)
REVISION
AC DCR 2849 COMPL. SEE REV. AD-1 FILMED: (WPS) 11-17-99
AE-1 DCR 3211 ADDED FUEL FILTER NO. 2 BY: MT APP'D: RAS 11-15-02
AF DCR 3211 COMPL. SEE REV. AE-1 FILMED: (WPS) 11-26-02
AF-1 DCR AB 2849 REVISED LOOP SEAL AND VALVE CONFIG. ON HEATING BOILER FUEL OIL STORAGE TANK. BY: NTH 01-13-03 APP'D: RBG 01-24-03
AG DCR AB 2894 COMPL. SEE REVISION AF-1. FILMED: (UJPS) 01-29-03
AG-1 IRE PUR 0302 SCANNED DRAWING TO CADD. BY: PJB 07/26/04 APP'D: SJA 07/27/04
AH IRE PUR 0302 COMPL. SEE REV. AG-1 FILMED: WPS: 09/28/04
AH-1 DCR 3511 ADDED VENT CAPS WITH FLAME ARRESTERS. DRFT'D: NTH 06-07-05 APP'D: R.J.N. 06/14/05
AJ DCR 3511 COMPL. SEE REV. AH-1 FILMED: 06/21/05
AJ-1 DCR 3519 REVISED DRAWING REFERENCE. DRFT'D: NTH 11-07-05 APP'D: ELB 12-14-05
AK DCR 3519 COMPLETE. SEE REVISION AJ-1. FILMED: 12-20-05
AK-1 DCR 3427 ADDED VALVES F0031-005 THRU F0031-011 AND TANK LEVEL INDICATION. REVISED LOCATION OF PUMPS START AND STOP. TRANSFER PUMP LEVEL SWITCH STANDPIPES DG-A AND DG-B TO DETAILS A AND B FOR CLARITY. DRFT'D: NTH 05-25-05 APP'D: DEA 06-11-05
AL DCR 3427 COMPLETE. SEE REVISION AK-1. FILMED: 04-18-06
AL-1 DCR 3432 ADDED SAMPLE PORT REFERENCE DWG. NUMBER AT EXHAUST STACK. DRFT'D: JBS 04-11-06 APP'D: RBG 04-11-06
AM DCR 3432 COMPLETE SEE REVISION AL-1. FILMED: 05-09-06
AM-1 DCR 3582 ADDED NOTE 4. DRFT'D: NTH 06-27-06 APP'D: JKK 06-28-06
AN DCR 3582 COMPLETE. SEE REVISION AM-1. FILMED: 11-21-06
AP CR 018902 ADDED VALVE F0-2-1. REFERENCE CR 018471. DRFT'D: APK 11-11-08 APP'D: AKZ 11-17-08
M-220
WISCONSIN
LAWRENCE E. NEWHART, JR.
E-11224
ELK GROVE, ILLINOIS
PROFESSIONAL ENGINEER
DOMINION ENERGY KEWAUNEE, INC.
KEWAUNEE POWER STATION
FLOW DIAGRAM
FUEL OIL SYSTEMS
DESIGNED BY
PIONEER SERVICE & ENGINEERING CO.
CHICAGO
HYBRID CADD
DESIGNED
DRAWN E.R.B. 03/01/99
APPROVED L.E. NEWHART 12/01/03
SCALE N/A
DWG. No. M-220
REV. AP

M-271

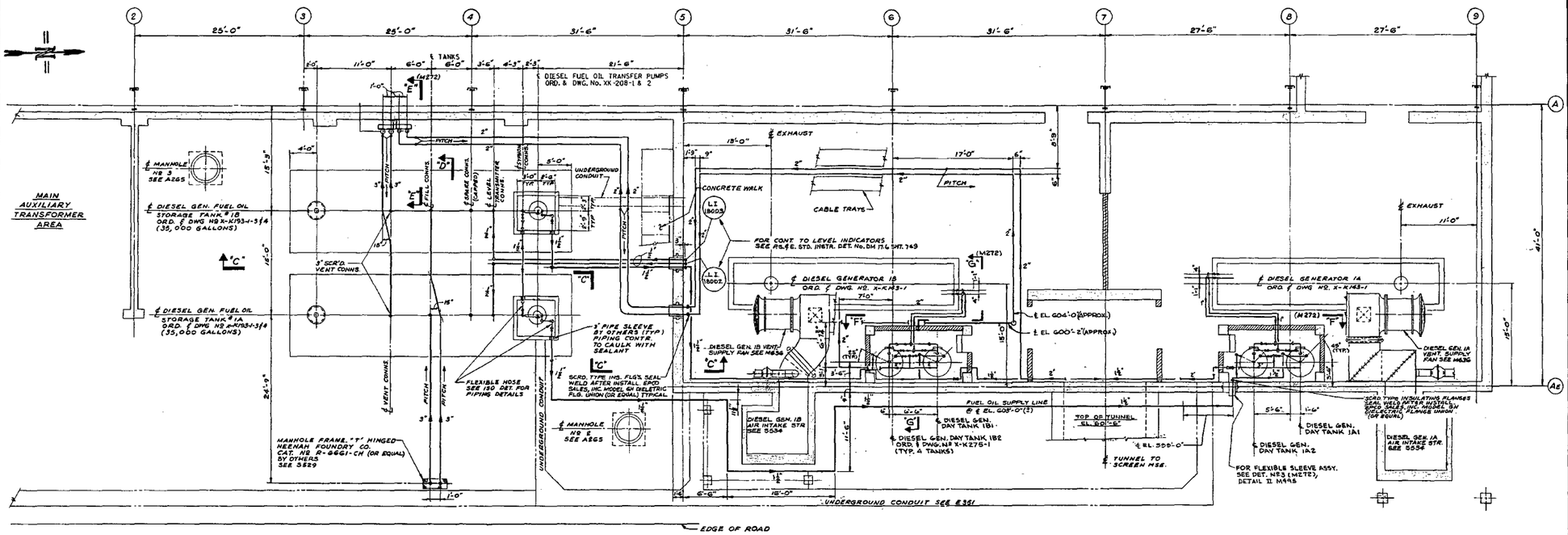


PLAN "A"

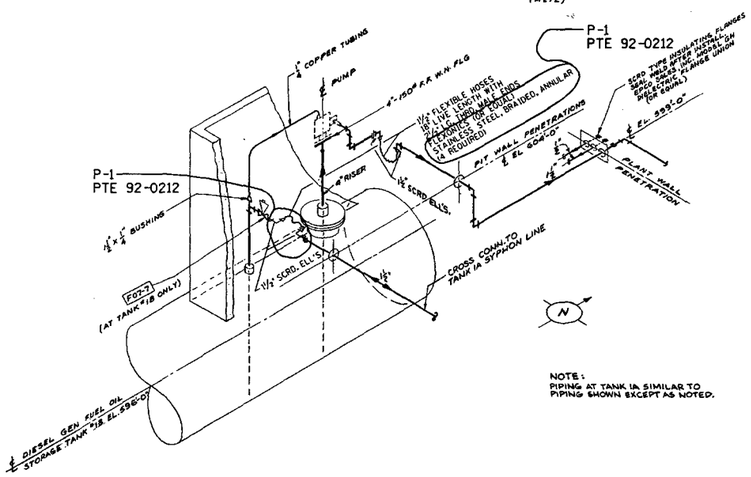


NOTE:
PIPING AT TANK 1A SIMILAR TO PIPING SHOWN EXCEPT AS NOTED.

ISOMETRIC PIPING DETAIL NO. 1
DIESEL FUEL OIL TRANSFER PUMP
NO SCALE

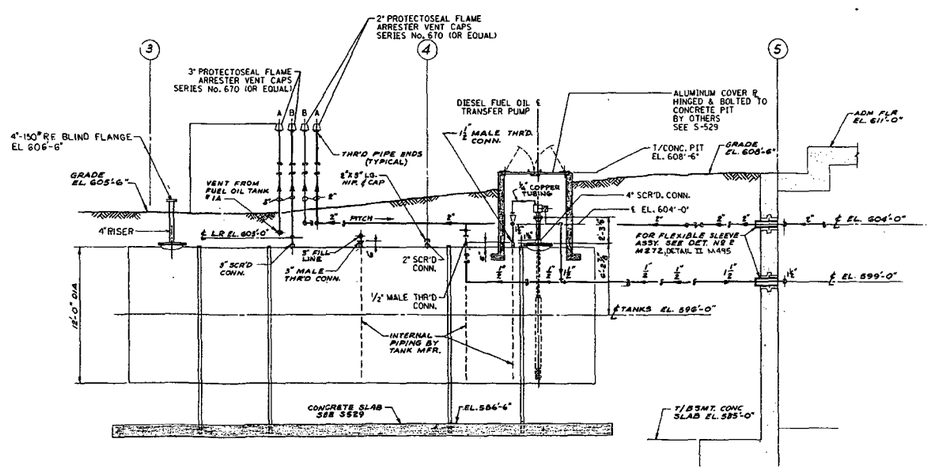


SECTION "C-C"

**GENERAL NOTES:**

PIPING FABRICATION, ERECTION, MATERIAL & VALVES SHALL CONFORM TO PIONEER SERVICE & ENGINEERING COMPANY'S SPECIFICATIONS NO. 204

**REFERENCE DRAWINGS:**

FLOW DIAGRAM M220

FOR VALVE DATA SEE VALVE SCHEDULE M319

CAUTION

PRIOR TO ALL FUTURE EXCAVATIONS, CHECK WITH DRAWING A-202 "AS-BUILT UNDERGROUND SERVICES"

REVISION

A AT A-5 TO A-6 RE-ROUTED 2" DIESEL GEN. DAY TANKS VENT LINES & MOVED 3" FUEL OIL STG. TANK #1A VENT LINE 2'-0" SOUTH. DR. E.R.B. CK. R.E. 5-23-70 APP. 5-29-70

B AT B-5 & C-10 ADDED 3" INSUL. CPLG. STRIPS AT C-8, ADDED NO. PK. STRIPS AT B-5, ADDED 1½" INSUL. CPLG. TYP. TO 150 DET. & 10 D-6 ADDED PIPE STD. INSTR. DET. NOTE. DR. WAL. CK. R.E. 11-16-70 APP. 11-18-70

C AT C-8, ADDED CONC. SLAB & TANK STRAPS DR. WAL. CK. EWL 1-7-71 APP. 1-7-71

D AT B-6 & C-4 CHANGED INSULATED CPLG. & ADDED SCRD. TYPE INSUL. FLGS. DR. WAL. CK. R.E. 2-1-71 APP. 2-2-71

FILMED - 5-8-71

E AT A-2, 15'-5" DIM. WAS 24'-0", AT C-8, 24'-0" DIM. WAS 26'-0" DR. WAL. CK. R.E. 2-5-71 APP. 2-8-71 FILMED 6/11/71

F AT B-6 ADDED LEVEL IND. NO. LI-1800B & LT-1800B DR. WAL. CK. R.B. 8-9-71 APP. 8-12-71 FILMED 8-18-71

G AT B-6 DELETED LEVEL TRANSMITTER NO. LT-2400B & LT-2400B DR. WAL. CK. R.E. 1-28-72 APP. 1-27-72 FILMED 2/6/72

H AT C-4 ADDED DIESEL GEN. 1B AIR INTAKE STR. & 1B VENT. REROUTED 1A & 1B FUEL OIL SUPPLY LINE AT C-11 ADDED DIESEL GEN. 1A AIR INTAKE STR. & ℄ VENT. AT C-7 & C-8 REROUTED DIESEL GEN. DAY TANKS 1" VENT LINE TO CLEAR ADDED DIESEL GEN. 1B VENT. SUPPLY FAN. DR. E.D. CK. R.W. 5-8-73 APP. 5-11-73 FILMED 5-11-73

J AT A-5 & B-5 ADDED DWG. CONN. LOCATING SYPHON 1B1 & 1B2 DR. WAL. CK. R.E. 3-21-73 APP. 3-22-73 FILMED 3-22-73

K AT C-7 & D-6 REVISED DIESEL GEN. DAY TANKS 1B1 & 1B2 VENT LINE PIPING IN ACCORDANCE WITH AS BUILT CONDITION. DR. HOWL CK. R.E. 7-17-73 APP. 7-17-73 FILMED 7-17-73

L ADDED "CAUTION" NOTE & H-12. APP'D: 3/16/76 FILMED: 1-13-76

M AT B-3 AND F-6 ADD 4" RISER DCR 665 BY: JRG 31-OCT-77 CHK'D RYB APP'D RFB FILMED 12-13-77

N(1) RENUMED PROJECT NO.; ADDED REFERENCE SEC. "C-C", PLAN "A" PER PTE 0012 DR: ESS 4-13-94 CK'D: 4-25-94 APPD: RJM 5-2-94

N(2) PDD 0112 COMP. SEE REV. M-1 FILMED: WFS 5-17-94

N(3) DCR 3591 REVISED PLAN "A" AND SECTION "C-C" DRFT'D: NTH 06-07-05 APP'D: KJN 06/14/05 RE PUR SCANNED TO CADD. REMOVED SCALES. APP'D: SAS 06/16/05

P DCR 3591 COMPL. SEE REV N-1 FILMED: 06/21/05

P-1 PTE 92-0212 REVISED ORIENTATION OF HOSE MOUNT. REVISED NOTE. DRFT'D: NTH 10-16-06 APP'D: RJL 10-17-06

Q PTE 92-0212 COMPLETE. SEE REVISION P-1. FILMED: 10-31-06

M-271

WISCONSIN LAWRENCE E NEWHART, JR E-11224 ELGIN, ILLINOIS SEAL

WISCONSIN PUBLIC SERVICE CORPORATION
KEWAUNEE NUCLEAR POWER PLANT
CARLTON, KEWAUNEE COUNTY, WISCONSIN

DIESEL GENERATOR FUEL OIL PIPING

DESIGNED BY PIONEER SERVICE & ENGINEERING CHICAGO

| HYBRID CADD | DESIGNED ERB | DRAWN ERB 7-14-69 | DWG. No. M-271 | REV. 0 |
|---|---|---|---|---|
| | APPROVED LEN 2/13/70 | SCALE NONE | | |

M-272

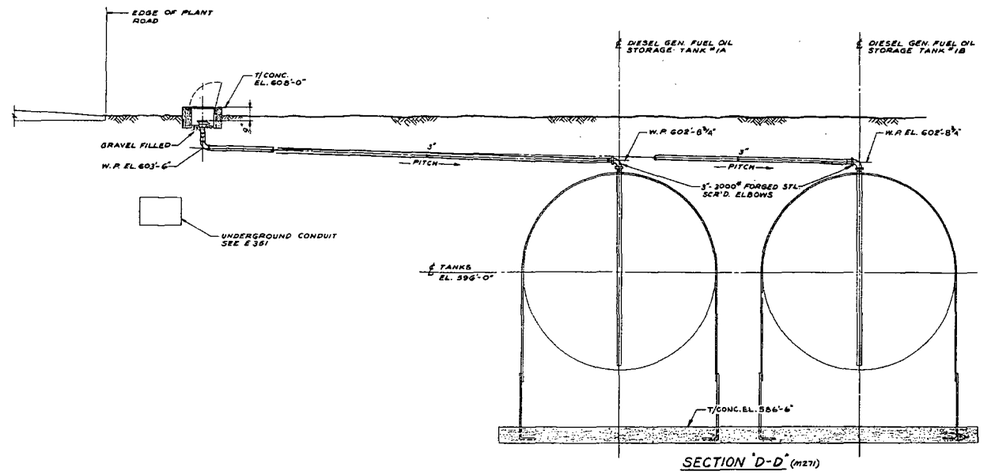


SECTION "D-D" (M271)

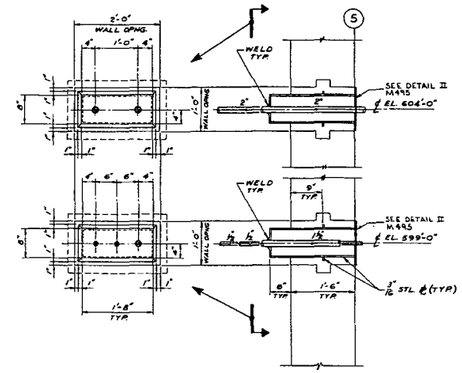


DETAIL Nº 2
FLEXIBLE SLEEVE ASSY

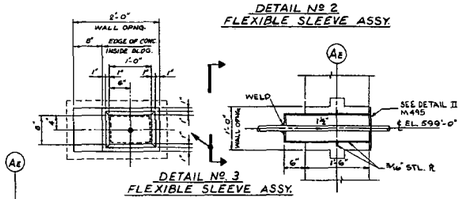


DETAIL Nº 3
FLEXIBLE SLEEVE ASSY.

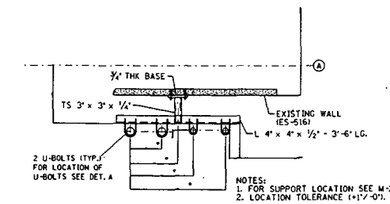


SECTIONAL PLAN "B - B" (M-272) * SEE NOTE 2

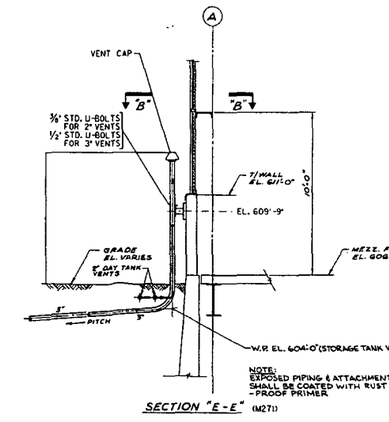


SECTION "E-E" (M271)

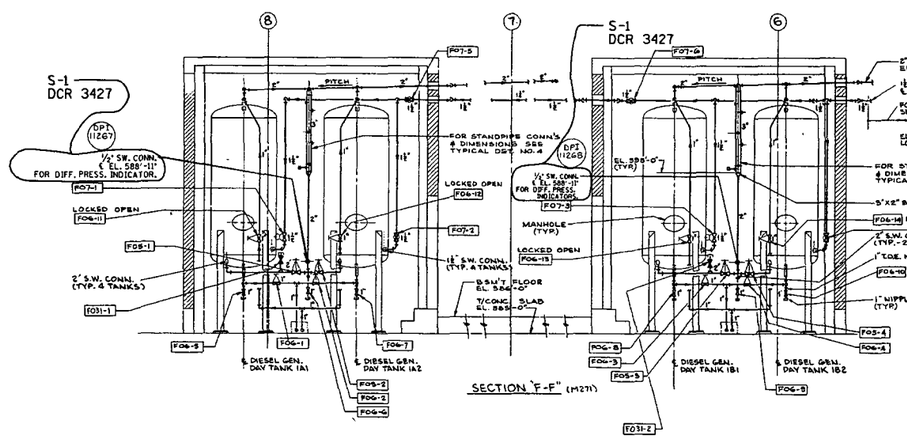


SECTION "F-F" (M271)

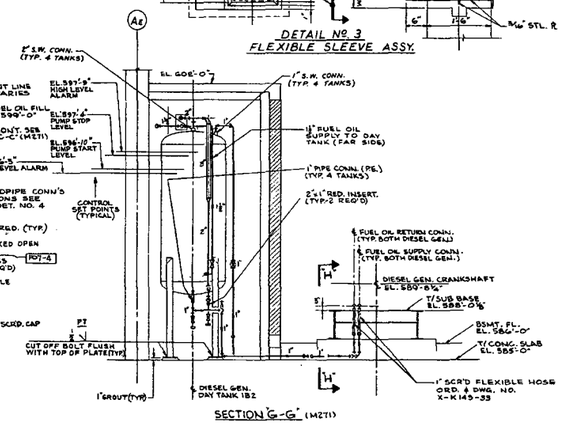


SECTION "G-G" (M271)

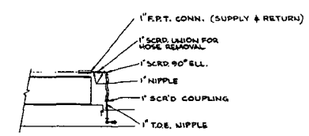


SECTION "H-H"

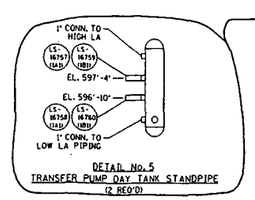


DETAIL No. 5
TRANSFER PUMP DAY TANK STANDPIPE
(2 REQ'D)

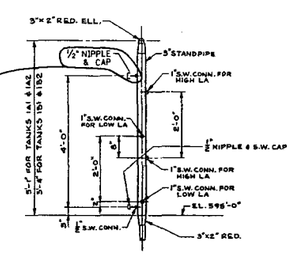


TYPICAL DETAIL Nº 4
DAY TANK STANDPIPE (2 REQ'D)

FOR LEVEL ALARMS SEE M302

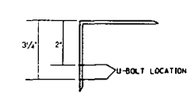


DETAIL "A"

REVISION

B AT D-2 & E-5 REVISED PIPING TO CLEAR MANHOLE, AT F-4 ADD 2 NO. 5" DIA. FLOOR SLEEVES, AT ALL VALVE DESCRIPTION. DR. MAL. CK. RB 11-18-70 APP: 11-16-70

C AT D-2, D-4 & E-10, REVISED STANDPIPE CONN'S & DIM'S. AT C-6, THRU C-6 ADDED CONC. PADS. AT D-2 & E-2 ADD 1" S.W. CONN. AT D-2 & E-2 ADD 2" NO. 2000# FORGED STL. ELBOW. MAS. D. AT F-7 ADD 1" S.W. CONN. DR. MAL. CK. RB 12-15-70 APP: 11-16-70

D REV. E-2 DELETED 1" NIPPLE & CAP TO TANK ON 2" NOZZLE. DR. MAL. CK. RB 2-11-71 APP: 2-11-71

E AT E-2 & E-8 ADDED PIPE ANCHORS. ADDED PIPE ANCHOR AT F-4. AT D-2 ADD 1" S.W. CONN. DR. MAL. CK. RB 2-23-71 APP: 2-23-71

F AT F-7 ADDED 1" S.W. CONN. AT FOUR CORNERS OF TANKS. ADDED 1" NIPPLE & CAP. CONN. CAGING. DR. MAL. CK. RB 4-7-71 APP: 4-7-71

FILMED 5-8-71

G AT SECT. "G-G" ADDED WELD NOTE AT BASE SUPPORT OF DAY TANKS. DR. MAL. CK. RB 5-7-71 APP: 5-7-71

FILMED 5-10-71

H AT F-5 CHG'D 1" CONN. TO 1½" CONN. ADDED 1½" CONN. AT F-7. DR. MAL. CK. RB 5-27-71 APP: 5-27-71

FILMED 6-1-71

J AT A-2 REVISED NOTES. ADD PROTECTO-SEAL FLASH ARRESTOR TO BE AS PER CATALOGUE NO. 250 (REPLACES SCHT. NO. 508 UNITS). DR. J.P.N. CK. R.B. 6-12-72 APP: 6-12-72

FILMED 6-12-72

K AT E-7 ADDED CONTROL SET POINTS. DR. P.N. CK. R.B. 7-7-72 APP: 7-7-72

FILMED 7-7-72

L REVISED SETPOINTS PER DCR 6671. CHANGED FROM 597'-6" TO 597'-4" 596'-8" TO 596'-10" DRWN: JKS 10-16-77 CHK'D: PMM 10-21-77 APP'D: DBM 10-21-77 FILMED: 10-25-77

L-1 PDD0050 REVISED DIFF. PRESS. INDICATORS. BY: PGD 4-22-92 CHK'D: [illegible] 4-22-92 APPD: RCM 4-23-92

M PDD0050 COMP. SEE REV. L-1 FLM'D: WPS 5-12-92

M-1 REMOVED PROJECT NO. REVISED DETAILS 2 AND 3. PER PDD0012 BY: ES 4-13-94 CHK'D: [illegible] 4-25-94 APP: RCM 5-5-94

N PDD0012 COMP. SEE REV. M-1 FILM'D: WPS 5-13-94

N-1 PDD0140 ADDED VALVES FO31-1 & FO31-2 LOC. E-1 & F-4 BY: BLY 10/11/95 CHK'D: RCM 10/16/95 APP'D: RCM 10/16/95

P PDD0160 COMPL. SEE REV. N-1 FILMED: (WPS) 11-21-95

P-1 DCR 2849 REMOVED NOTE AT DWG. C0-ORD A-2. BY: [illegible] 10-9-97 APPD: [illegible] 10/6/97

Q DCR 2849 COMPL. SEE REV. P-1 FILMED: (WPS) 11-4-97

Q-1 RE PUR 0302 SCANNED DRAWING TO CADD AND REMOVED SCALES. BY: PJB 07/26/04 APP'D: SJA 08/09/04

R RE PUR 0302 COMPL. SEE REV. Q-1 FILMED: WPS 09/28/04

S-1 DCR 3591 REVISED SECTIONS "B - B" AND "E - E". DRFT'D: NTH 06-07-05 APP'D: EJH 06/15/05

S DCR 3591 COMPL. SEE REV. R-1 FILMED: 06/21/05

S-1 DCR 3427 ADDED LS TANK, TRANS PUMP STANDPIPE AND DETAIL No. 5. REVISED NOTES. DRFT'D: NTH 05-28-05 APP'D: DEA 06-11-05

T DCR 3427 COMPLETE. SEE REVISION S-1. FILMED: 04-04-06

M-272

WISCONSIN LAWRENCE E. NEWHART, JR. E-11224 ELK GROVE ILLINOIS PROFESSIONAL ENGINEER SEAL

WISCONSIN PUBLIC SERVICE CORPORATION
KEWAUNEE NUCLEAR POWER PLANT
CARLTON, KEWAUNEE COUNTY, WISCONSIN

DIESEL GENERATOR
FUEL OIL PIPING

DESIGNED BY
PIONEER SERVICE & ENGINEERING CO.
CHICAGO

HYBRID CADD

| DESIGNED | DRAWN | DWG. No. | REV. |
|---|---|---|---|
| E.R.B. | E.R.B. 02/04/70 | M-272 | T |
| APPROVED | SCALE | | |
| L.E.NEWHART 02/13/70 | N/A | | |