CONSOLIDATED SAFETY ANALYSIS REPORT

FOR

MODEL 10-160B

TYPE B RADWASTE SHIPPING CASK

REVISION 0

December 2007

Energy*Solutions*
140 STONERIDGE DRIVE
COLUMBIA, SOUTH CAROLINA 29210

TABLE OF CONTENTS

1.0 GENERAL INFORMATION

1.1 Introduction 1-1

1.2 Package Description 1-1

1.2.1 Packaging 1-1

1.2.1.1 Containment Vessel 1-2
1.2.1.2 Neutron Absorbers 1-2
1.2.1.3 Package Weight 1-2
1.2.1.4 Receptacles 1-2
1.2.1.5 Vent, Drain, Test Ports and Pressure Relief Systems 1-2
1.2.1.6 Lifting Devices 1-2
1.2.1.7 Tie-Downs 1-2
1.2.1.8 Heat Dissipation 1-2
1.2.1.9 Coolants 1-2
1.2.1.10 Protrusions 1-2
1.2.1.11 Shielding 1-2

1.2.2 Operational Features 1-3
1.2.3 Contents of Packaging 1-3

1.2.3.1 Cask Contents 1-3
1.2.3.2 Waste Forms 1-3

1.3 Appendix - CNS 10-160B Shipping Cask Drawing 1-6

2.0 STRUCTURAL EVALUATION

2.1 Structural Design 2-1

2.1.1 Discussion 2-1

2.1.1.1 Containment Vessel 2-1
2.1.1.2 Shielding 2-2
2.1.1.3 Impact Limiters 2-2
2.1.1.4 Summary 2-2

TABLE OF CONTENTS (CONTINUED)

2.1.2 Design Criteria 2-2

2.1.2.1 Normal and accident conditions of Transport 2-2
2.1.22 Tie-Downs and Lifting Devices 2-15

2.2 Weights and Centers of Gravity 2-16
2.3 Mechanical Properties of Material 2-17
2.4 General Standards for all Packages 2-17

2.4.1 Chemical and Galvanic Reactions 2-17
2.4.2 Positive Closure 2-17
2.4.3 Lifting Devices 2-22
2.4.4 Tie-Downs 2-32

2.4.4.1 Tie-Down Evaluation 2-34
2.4.4.2 Tie-Down Stress Evaluation 2-39
2.4.4.3 Stresses in the Welds 2-42

2.5 Standards for Type B and Large Quantity Packaging 2-42

2.6 Normal Conditions of Transport 2-43

2.6.1 Heat 2-43
2.6.2 Cold 2-43
2.6.3 Pressure 2-47
2.6.4 Vibration 2-47
2.6.5 Water Spray 2-47
2.6.6 Free Drop 2-47

2.6.6.1 End Drop 2-51
2.6.6.2 Side Drop 2-51
2.6.6.3 Comer Drop 2-51

2.6.7 (Successive) Comer Drop 2-51
2.6.8 Penetration 2-55

2.7 Hypothetical Accident Condition 2-56

2.7.1 Free Drop 2-56

TABLE OF CONTENTS (CONTINUED)

2.7.1.1 Free Drop Impact – End Drop 2-57

2.7.1.1.1 End Drop Lid Bolt Forces 2-61
2.7.1.1.2 End Drop Primary Lid Bolt Forces 2-61
2.7.1.1.3 Lead Slump 2-64

2.7.1.2 Free Drop Impact – Side Drop 2-64
2.7.1.3 Free Drop Impact – Corner Drop 2-74
2.7.1.4 Oblique Drop 2-80
2.7.1.5 Impact Limiter Attachment Forces 2-83

2.7.2 Puncture 2-89

2.7.2.1 Sides 2-89
2.7.2.2 Ends 2-92

2.7.3 Thermal 2-98

2.7.3.1 Summary of Pressures and Temperatures 2-98
2.7.3.2 Differential Thermal Expansion 2-98
2.7.3.3 Stress Calculation 2-98

2.7.4 Water Immersion 2-100
2.7.5 Summary of Damage 2-100

2.8 Special Form 2-100
2.9 Fuel Rods 2-100
2.10 Appendix to Section 2.0 2-103

2.10.1 Analytical Methods 2-104

2.10.1.1 General Discussion Foam Impact Limiter 2-104
2.10.1.2 Cask Drop Computer Model 2-105

2.10.1.2.1 End Drop Model 2-105
2.10.1.2.2 Side Drop Model 2-107
2.10.1.2.3 Corner Drop 2-107

2.10.1.3 Impact Limiter Chamfer 2-119

2.10.2 ANSYS Finite Element Analysis 2-125

TABLE OF CONTENTS (CONTINUED)

2.10.2.1 Finite Element Model Discussion 2-125
2.10.2.2 Finite Element Model Internal Constraints 2-144
2.10.2.3 Finite Element Model Boundary Conditions 2-144
2.10.2.4 Finite Element Model Solution Techniques 2-149
2.10.2.5 Loading 2-159
2.10.2.6 Stress Linearization 2-168

2.10.3 Data Reduction of Cask Structural Computation Results 2-170

2.10.3.1 Results of 3-Dimensional Linear Model 2-170
2.10.3.2 Results of 2-Dimensional Nonlinear Model 2-170

2.10.4 References for Chapter 2 2-216

Attachment 1
Attachment 2
Attachment 3
Attachment 4

3.0 THERMAL EVALUATION

3.1 Discussion 3-1
3.2 Summary of Thermal Properties of Materials 3-5
3.3 Technical Specification of Components 3-5
3.4 Thermal Evaluation for Normal Conditions of Transport 3-7

3.4.1 Thermal Model 3-7

3.4.1.1 Analytical Model 3-7
3.4.1.2 Test Model 3-10

3.4.2 Maximum Temperatures 3-10
3.4.3 Minimum Temperatures 3-10
3.4.4 Maximum Internal Pressures 3-10
3.4.5 Maximum Thermal Stress 3-11
3.4.6 Evaluation of Package Performance for Normal Conditions of Transport 3-11

3.5 Hypothetical Accident Thermal Evaluation 3-12

3.5.1 Thermal Model 3-12

3.5.1.1 Analytical Model 3-12
3.5.1.2 Test Model 3-13

TABLE OF CONTENTS (CONTINUED)

3.5.2 Package Conditions and Environment 3-13
3.5.3 Package Temperatures 3-13
3.5.4 Maximum Internal Pressures 3-18
3.5.5 Maximum Thermal Stresses 3-18
3.5.6 Evaluation of Package Performance for the Hypothetical Accident Conditions 3-19

3.6 References 3-20

4.0 CONTAINMENT

4.1 Containment Boundary 4-1

4.1.1 Containment Vessel 4-1
4.1.2 Containment Penetration 4-1
4.1.3 Welds 4-1
4.1.4 Closure and Seals 4-1

4.2 Containment requirements for Normal Conditions of Transport 4-2

4.2.1 Leakage Test Requirements 4-2
4.2.2 Pressurization of the Containment Vessel 4-6
4.2.3 Coolant Containment 4-6
4.2.4 Coolant Loss 4-6

4.3 Containment Requirements for Hypothetical Accident Conditions 4-6

4.3.1 Leakage Test Requirements 4-6

4.4 Determination of Test Conditions for Assembly Verification Leak Test 4-8

4.4.1 Maximum Permissible Lead Rate at Standard Conditions 4-8
4.4.2 Detector Sensitivity – Test Conditions 4-9
4.4.3 Required Charge Pressure at the Test Temperature 4-10

TABLE OF CONTENTS (CONTINUED)

4.5 Periodic Verification Leak Rate Determination Using R-12 Test Gas 4-11

4.5.1 Introduction 4-11
4.5.2 Detector Sensitivity Calculation – Test Conditions 4-11

4.6 Periodic Verification Leak Rate Determination Using Helium Test Gas 4-16

4.6.1 Introduction 4-16
4.6.2 Detector Sensitivity Calculation – Test Conditions 4-17

4.7 Periodic Verification Leak Rate Determination Using R-134a Test Gas 4-21

4.7.1 Introduction 4-21
4.7.2 Detector Sensitivity Calculation – Test Conditions 4-21

4.8 Combustible Gas Generation Safety Assurance 4-26

4.9 References 4-27

4.10 Appendices 4-29

4.10.1 Properties of R-134a 4-30
4.10.2 Transuranic (TRU) Waste Compliance Methodology for Hydrogen Gas Generation 4-31

5.0 SHIELDING EVALUATION 5-1

5.1 Discussion and Results 5-1

5.1.1 Discussion and Results 5-1
5.1.2 Shielding Design Features 5-1
5.1.3 Maximum Dose Rate Calculations 5-1

5.2 Source Specification 5-2

5.2.1 Gamma Source 5-2
5.2.2 Neutron Source 5-2

5.3 Model Specification 5-3

5.3.1 Description of Radial and Axial Shielding Configuration 5-3
5.3.2 Material Properties 5-4

TABLE OF CONTENTS (CONTINUED)

5.4 Shielding Evaluation 5-4

5.4.1 Methods 5-4
5.4.2 Input and Output Data 5-4
5.4.3 Flux-to-Dose-Rate Conversion 5-5
5.4.4 External Radiation Levels 5-6

5.5 Conclusion 5-7

5.6 References 5-7

6.0 CRITICALITY EVALUATION 6-1

6.1 DESCRIPTION OF CRITICALITY DESIGN 6-1

6.1.1 Design Features 6-1
6.1.2 Summary Table of Criticality Evaluation 6-1
6.1.3 Criticality Safety Index 6-1

6.2 FISSILE MATERIAL CONTENTS 6-2

6.3 GENERAL CONSIDERATIONS 6-4

6.3.1 Model Configuration 6-4
6.3.2 Material Properties 6-18
6.3.3 Computer Codes and Cross-Sectional Libraries 6-20
6.3.4 Demonstration of Maximum Reactivity 6-20

6.4 SINGLE PACKAGE EVALUATION 6-21

6.4.1 Configuration 6-21
6.4.2 Results 6-21

6.5 EVALUATION OF PACKAGE ARRAYS UNDER NCT 6-27

6.5.1 Configuration 6-27
6.5.2 Results 6-27

6.6 EVALUATION OF PACKAGE ARRAYS UNDER HAC 6-29

6.6.1 Configuration 6-29
6.6.2 Results 6-32

6.7 FISSILE MATERIAL PACKAGES FOR AIR TRANSPORT 6-34

6.8 BENCHMARK EVALUATIONS 6-34

6.8.1 Applicability of Benchmark Experiments 6-34
6.8.2 Bias Determination 6-35

6.9 APPENDIX 6-38

6.9.1 References 6-38
6.9.2 Representative MCNP Input Files 6-39

7.0 OPERATING PROCEDURES

7.1 Procedure for Loading the Package 7-1
7.2 Procedure for Unloading the Package 7-6
7.3 Preparation of Empty Packages for Transport 7-7
7.4 Procedures for Shipment of Packages Which Generate Combustible Gases 7-8

7.4.1 Combustible Gas Control Inerting 7-8
7.4.2 Combustible Gas Suppression 7-9

8.0 ACCEPTANCE TESTS AND MAINTENANCE

8.1 Acceptance Tests 8-1

8.1.1 Visual Examination 8-1
8.1.2 Structural Tests 8-1
8.1.3 Leak Tests 8-2
8.1.4 Component Tests 8-2
8.1.5 Test for Shielding Integrity 8-2
8.1.6 Thermal Acceptance Tests 8-3
8.1.7 Impact Limiter Foam 8-3
8.1.8 Pressure Tests 8-3

8.2 Maintenance Program 8-3

8.2.1 Routine Maintenance 8-3

8.2.1.1 Fasteners 8-4
8.2.1.2 Gaskets and Seals 8-4
8.2.1.3 Painted Surfaces, Identification Markings, and Match Marks Used for Closure Orientation 8-5

8.2.2 Periodic Maintenance 8-5

8.2.2.1 Periodic Leak Tests 8-5
8.2.2.2 Assembly Verification Leak Test 8-6
8.2.2.3 Ratchet Binders 8-7

8.2.3 Subsystem Maintenance 8-7

8.2.4 Valves, Rupture Discs and Gaskets 8-7

8.2.5 Shielding 8-8

8.3 Appendix

8.3.1 Polyurethance Foam Specification ES-M-172 8-9

LIST OF TABLES

TABLE NO.	DESCRIPTION	
2-1	Summary of Normal and Accident Condition loading	2-3
2-2	Mechanical Properties of Materials used in Fabrication of 10-160B Cask	2-18
2-3	Material Properties Versus Temperature	2-19
2-4	Primary Stress Intensity Allowables	2-20
2-5	Stress Summary of Lift Lugs and Welds	2-24
2-5.1	Stress Summary of Tie-Downs	2-33
2-5A	Nil Ductivity Temperatures Requirements of Fracture Critical Components of the 10-160B Cask	2-46
2-6	Maximum Stress Intensities in Cask Components Hypothetical Accident – 1-ft End Drop	2-52
2-7	Maximum Stress Intensities in Cask Components Hypothetical Accident – 1-ft Side Drop	2-53
2-8	Maximum Stress Intensities in Cask Components Hypothetical Accident – 1-ft Corner Drop	2-54
2-9	Caskdrop Program Output for End Drop (Soft Foam)	2-58
2-10	Caskdrop Program Output for End Drop (Hard Foam)	2-59
2-11	Maximum Stress Intensities in Cask Components Hypothetical Accident – 30-ft End Drop	2-60
2-12	10-160B Cask – End Drop Analysis Secondary - Lid Bolt Loading	2-63
2-13	Caskdrop Program Output for Side Drop (Soft Foam)	2-65
2-14	Caskdrop Program Output for Side Drop (Hard Foam)	2-66
2-15	Maximum Stress Intensities in Cask Components Hypothetical Accident – 30-ft Side Drop	2-67
2-16(a)	10-160B Cask – Side Drop Analysis Secondary – Lid Bolt Loading	2-72
2-16(b)	10-160B Cask – Side Drop Analysis Primary – Lid Bolt Loading	2-73
2-17	Not Used	

LIST OF TABLES (CONTINUED)

TABLE NO.	DESCRIPTION	
2-18	Caskdrop Program Output for Corner Drop (Soft Foam)	2-75
2-19	Caskdrop Program Output for Corner Drop (Hard Foam)	2-76
2-20	Maximum Stress Intensities in Cask Components Hypothetical Accident – 30-ft Corner Drop	2-77
2-21(a)	10-160B Cask – Corner Drop Analysis Secondary – Lid Bolt Loading	2-81
2-21(b)	10-160B Cask – Corner Drop Analysis Primary – Lid Bolt Loading	2-82
2-21	Not Used	
2-22	Not Used	
2-23	Not Used	
2-24	Not Used	
2-25	Summary of Largest Secondary Stress Intensity in 10-160B Cask Under Fire Accident	2-99
2-26	Summary of Largest Secondary Stress Intensity in 10-160B Cask Under Hypothetical Condition	2-101
A2-1	10-160B Cask Finite Element Model Substructure Detail	2-128
A2-2	Material Properties Used in the Drop Analysis	2-129
A2-3	Constraint Reactions – 30′ End Drop	2-150
A2-4	Constraint – 30′ Side Drop	2-151
A2-5	Constraint Reactions – 30′ Corner Drop	2-152
A2-6	Summary of Distribution of Various Loading Over the Cask Components Under Different Drop Conditions	2-160
A2-7	Side Drops Crush Planes Forces	2-161
A2-8	Corner Drops Crush Planes Forces	2-166
A2-9	Unit Load Vectors Used for Various Substructures	2-167
A2-10	Membrane Stresses in Various Components of the Cask End Drop (30-foot)	2-171
A2-11	Membrane Plus Bending Stresses in Various Components of the Cask End Drop (30-foot)	2-172

LIST OF TABLES (CONTINUED)

TABLE NO. DESCRIPTION

A2-12 Maximum Stress Intensities in Cask Due to 30-ft End Drop 2-174
A2-13 Stress Intensity Combinations Due to 30-ft End Drop 2-175
A2-14 Membrane Stresses in Various Components of the Cask 30-ft Side Drop 2-176
A2-15 Membrane Plus Bending Stresses in Various Components of the Cask 30-ft Side Drop 2-178
A2-16 Maximum Stress Intensities in Cask Due to 30-ft Side Drop 2-180
A2-17 Stress Intensity Combinations Due to 30-ft Side Drop 2-181
A2-18 Membrane Stresses in Various Components of the Cask 30-ft Corner Drop 2-182
A2-19 Membrane Plus Bending Stresses in Various Components of the Cask 30-ft Corner Drop 2-184
A2-20 Maximum Stress Intensities in Cask Due to 30-ft Corner Drop 2-186
A2-21 Stress Intensity Combinations Due to 30-ft Corner Drop 2-187
A2-22 Maximum Stress Intensities in Cask Due to 1-ft End Drop 2-188
A2-23 Stress Intensity Combinations Due to1-ft End Drop 2-189
A2-24 Maximum Stress Intensities in Cask Due to 1-ft Side Drop 2-190
A2-25 Stress Intensity Combinations Due to1-ft Side Drop 2-191
A2-26 Maximum Stress Intensities in Cask Due to 1-ft Corner Drop 2-192
A2-27 Stress Intensity Combinations Due to1-ft Corner Drop 2-193
A2-28 Intentionally Left Blank 2-194

LIST OF TABLES (CONTINUED)

TABLE NO. DESCRIPTION

A2-29 Membrane Stresses in Various Components of the Cask Cold Environment 2-199
A2-30 Membrane Plus Bending Stresses in Various Components of the Cask Cold Environment 2-200
A2-31 Membrane Stresses in Various Components of the Cask Hot Environment 2-201
A2-32 Membrane Plus Bending Stresses in Various Components of the Cask Hot Environment 2-202
A2-33 Membrane Stresses in Various Components of the Cask Increased External Pressure 2-203
A2-34 Membrane Plus Bending Stresses in Various Components of the Cask Increased External Pressure 2-204
A2-35 Membrane Stresses in Various Components of the Cask Minimum External Pressure 2-205
A2-36 Membrane Plus Bending Stresses in Various Components of the Cask Minimum External Pressure 2-206
A2-37 Membrane Stresses in Various Components of the Cask Internal Pressure of 10 psig 2-207
A2-38 Membrane Plus Bending Stresses in Various Components of the Cask Internal Pressure of 10 psig 2-209
A2-39 Membrane Stresses in Various Components of the Cask External Pressure of 25 psig 2-210
A2-40 Membrane Plus Bending Stresses in Various Components of the Cask External Pressure of 25 psig 2-211
A2-41 Membrane Plus Bending Stresses in Various Components Fire Accident 2-212
A2-42 Membrane Plus Bending Stresses in Various Components of the Cask Fire Accident 2-215
3.1 Summary of Thermal Results 3-2
3.2 Summary of Initial Conditions & Assumptions 3-4

LIST OF TABLES (CONTINUED)

TABLE NO. DESCRIPTION

3.3(a) Temperature – Independent thermal Properties 3-5
3.3(b) Temperature Dependent Thermal Properties 3-6
3.4 Summary Maximum Hypothetical Accident Temperatures Accident Temperatures 3-15
4.1 Bolt and Cap Screw Torque Requirements 4-2
5.1 Summary of Maximum Dose Rates 5-2
5.2 Material Properties 5-4
5.3 Gamma-Ray-Flux-to Dose-Rate Conversion Factors 5-5
5.4 Neutron Flux-to-Dose-Rate Conversion Factors 5-6
5.5 Maximum External Radiation Levels 5-6
6.1. Summary of Criticality Safety Evaluation Results. 6-2
6.2. NCT Fissile Sphere and Reflector Compositions. 6-6
6.3. HAC Fissile Sphere and Reflector Compositions 6-7
6.4. Assumed Nominal Dimensions of the 10-160B Cask MCNP Criticality Model. 6-18
6.5. Materials and Elemental Compositions Used to Perform the Criticality Analyses for the 10-160B Cask. 6-19
6.6. Single Unit Keff vs. H/Pu Ratio for NCT for Various Configurations 6-24
6.7. Single Unit Keff vs. H/Pu Ratio for HAC for Various Configurations 6-26
6.8. Values of Keff vs. Array Spacing for an Infinite Array of 10-160B Casks Under NCT. 6-29
6.9. Values of Keff vs Interspersed Water Densities for an Infinite Array of 10-160B Casks Under HAC. 6-33

6.10. Results of Monte Carlo N-Particle Calculations of the Forty Plutonium Benchmark Experiments. 6-36

LIST OF FIGURES

FIGURE NO.	DESCRIPTION	
1-1	CNS 10-160B General Arrangement	1-5
2-1.1	Constituted Stress-Strain Curve For a516 GR.70	2-12
2-1	Compressive Stress-Strain Curve for Foam	2-21
2-2	Cask Lift Lug	2-23
2-3	Top View Tie-Down Arrangement	2-35
2-4	Tie-Down Lug Detail	2-40
2-9	Fracture Critical Components	2-44
2-9A	Design Chart for Category 11 Fracture Critical Components	2-45
2-10	1-Foot End Drop CASKDROP Printout	2-48
2-11	1-Foot Side Drop CASKDROP Printout	2-49
2-12	1-Foot Corner Drop CASKDROP Printout	2-50
2-13	End-Drop – Stress Intensity Contour Plot Secondary Lid	2-62
2-14	Side Drop – Stress Intensity Contour Plot Bolt Ring	2-68
2-15	Side Drop – Stress Intensity Contour Plot Primary Lid	2-69
2-16	Side Drop – Stress Intensity Contour Plot Lower Shell	2-70
2-17	Corner Drop – Stress Intensity Contour Plot Bolt Ring	2-78
2-18	Corner Drop – Stress Intensity Contour Plot Primary Lid	2-79
2-18.1	Load Distribution During the Puncture accident	2-96
A2-1	End Drop – Region Definition	2-106
A2-2	Side Drop – Circumferential Load Distribution	2-108
A2-3	Side Drop – Variable Definition	2-109
A2-4	Side Drop – Region Definition	2-110
A2-5	Corner Drop – Crush Plane and Grid	2-111
A2-6	Corner Drop – Regions Along Center Line	2-113
A2-7	Corner Drop – Payload Inertia Distribution	2-115
A2-8	Upper Impact Limiter Inertia Distribution	2-116
A2-9	Corner Drop – Regions Along Cask Centerline	2-117
A2-10	Chamfer Geometry	2-120
A2-11	Corner Drop – Chamfer Effect	2-124

LIST OF FIGURES (CONTINUED)

FIGURE NO.	DESCRIPTION	
A2-12	Finite Element Model – Substructure Overview	2-126
A2-13	Substructure No. 1 – Node Numbers	2-130
A2-14	Substructure No. 2 – Node Numbers	2-131
A2-15	Substructure No. 3 – Node Numbers	2-132
A2-16	Substructure No. 4 – Node Numbers	2-133
A2-17	Substructure No. 5 – Node Numbers	2-134
A2-18	Substructure No. 6 – Node Numbers	2-135
A2-19	Substructure No. 7 – Node Numbers	2-136
A2-20	Substructure No. 1 – Element Numbers	2-137
A2-21	Substructure No. 2 – Element Numbers	2-138
A2-22	Substructure No. 3 – Element Numbers	2-139
A2-23	Substructure No. 4 – Element Numbers	2-140
A2-24	Substructure No. 5 – Element Numbers	2-141
A2-25	Substructure No. 6 – Element Numbers	2-142
A2-26	Substructure No. 7 – Element Numbers	2-143
A2-27	Internal Constraints Used in ANSYS Drop Analyses	2-145
A2-28	Boundary Conditions – End Drop	2-146
A2-29	Boundary Conditions – Side Drop	2-147
A2-30	Boundary Conditions – Corner Drop	2-148
A2-31	Flow Diagram – Substructure Generation Analysis	2-154
A2-32	Flow Diagram – Substructure Node No. Transformation	2-155
A2-33	Flow Diagram – Cask Drop Analysis	2-156
A2-34	Flow Diagram – Substructure Node No. Retransformation	2-157
A2-35	Flow Diagram – Substructure Stress Pass	2-158
A2-36	Load Distribution – End Drop	2-162
A2-37	Load Distribution – Side Drop	2-163
A2-38	Load Distribution – Corner Drop	2-164
A2-39	Linearization of Finite Element Stress Results	2-169
A2-40	Location of Stresses Indicated in Tables A2-10 and A2-11	2-173

LIST OF FIGURES (CONTINUED)

FIGURE NO. DESCRIPTION

A2-41 Location of Stresses Indicated in Tables A2-14 2-177
A2-42 30-Ft Side Drop Locations of Stresses Indicated in Table A2-15 2-179
A2-43 30-Ft Corner Drop Locations of Stresses Indicated in Table A2-18 2-183
A2-44 30-Ft Corner Drop Locations of Stresses Indicated in Table A2-19 2-185
A2-44.1 Two-Dimensional Finite Element Model Used in the Analysis of 10-160B Cask Under Axisymmetric Loading 2-195
A2-45 Locations of Stresses Indicated in Tables A2-29 Through A2-36..... 2-198
A2-46 Locations of Stresses Indicated in Tables A2-37 Through A2-40..... 2-208
A2-47 Fire Accident Temperature Distribution..... 2-213
A2-48 Fire Accident Locations of Stresses Indicated in Tables A2-41 and A2-42.... 2-214
3.1 Location of Components Analyzed in Thermal Design 3-3
3.2 Node and Element Locations in the CNS 10-160B Cask Thermal Finite Element Model..... 3-8
3.3 Transient Fire Analysis – Load step and Boundary Conditions Schematic..... 3-14
3.4 Hypothetical Accident – Fire Transient: Temperature Versus Time..... 3-16
3.5 Hypothetical Accident – Cooldown: Temperature Versus Time..... 3-17
4.1 Allowable R-12/Air Mixture Test Leakage, cm^3/sec, versus Test Temperature deg. F..... 4-13
4.2 Allowable R-12 Test Leakage, cm^3/sec, versus Test Temperature deg. F 4-14
4.3 Allowable R-12 Test Leakage, oz/yr, versus Test Temperature deg. F..... 4-15
4.4 Allowable R-12 Test Leakage sensitivity, oz/yr, versus Test Temperature deg. F..... 4-15

LIST OF FIGURES (CONTINUED)

FIGURE NO. DESCRIPTION

4.5 Allowable He/Air Mixture Test Leakage, cm^3/sec, versus Test Temperature deg. F 4-18
4.6 Allowable Helium Test Leakage, cm^3/sec, versus Test Temperature deg. F 4-19
4.7 Allowable Helium Test Leakage, oz/yr, versus Test Temperature deg. F..... 4-20
4.8 Allowable Helium Test Leakage sensitivity, oz/yr, versus Test Temperature deg. F 4-20
4.9 Allowable R-134a/Air Mixture Test Leakage, cm^3/sec, versus Test Temperature deg. F 4-23
4.10 Allowable R-134a Test Leakage, cm^3/sec, versus Test Temperature deg. F..... 4-24
4.11 Allowable R-134a Test Leakage, oz/yr, versus Test Temperature deg. F..... 4-25
4.12 Allowable R-134a Test Leakage sensitivity, oz/yr, versus Test Temperature deg. F 4-25
5.1 NCT Cask Model 5-3
5.2 HAC Cask Model 5-4
6-1. Elevation View of a MCNP Model for a Single 10-160B Cask With Ten 55-gal Drums in the Cask Cavity..... 6-9
6-2 Plan View of a MCNP Model for a Single 10-160B Cask With Ten 55-gal Drums in the Cask Cavity..... 6-10
6-3. Elevation View of a MCNP Model for a Single 10-160B Cask with the Fissile and Reflector Regions for the NCT Centroid Case (Case f309). 6-11
6-4. Elevation View of a MCNP Model for a Single 10-160B Cask with the Fissile and Reflector Regions for the NCT Center Floor Case (Case f329)..... 6-12
6-5. Elevation View of a MCNP Model for a Single 10-160B Cask with the Fissile and Reflector Regions for the NCT Corner Floor Case (Case f349)..... 6-13
6-6. Elevation View of a MCNP Model for a Single 10-160B Cask with the Fissile and Reflector Regions for the HAC Centroid Case (Case f003)..... 6-14
6-7. Elevation View of a MCNP Model for a Single 10-160B Cask with the Fissile and Reflector Regions for the HAC Center Floor Case (Case f013)..... 6-15

LIST OF FIGURES (CONTINUED)

FIGURE NO. DESCRIPTION

6-8. Elevation View of a MCNP Model for a Single 10-160B Cask with the Fissile and Reflector Regions for the HAC Corner Floor Case (Case f023). 6-16
6-9. Elevation View of a MCNP Model for a Single 10-160B Cask with the Fissile and Reflector Regions for the HAC Corner Ceiling Case (Case f033). 6-17
6-10. NCT Multiplication Factors for Single 10-160B Cask. 6-23
6-11. HAC Multiplication Factors for Single 10-160B Cask. 6-25
6-12. Plan View of a Monte Carlo N-Particle Model for an Infinite Array of NCT 10 160B Casks (MCNP case f369a). 6-28
6-13. Plan View of a Monte Carlo N-Particle Model for an Infinite Array of HAC 10-160B Casks (MCNP case f023b). 6-30
6-14. Plan View of a Monte Carlo N-Particle Model for an Infinite Array of HAC 10-160B Casks (MCNP case f023by). 6-31

ACRONYMS AND ABBREVIATIONS

CSI ..	Criticality Safety Index
HAC	Hypothetical Accident Conditions
ID	Inside Diameter
MCNP	Monte Carlo N-Particle (computer code)
NCT.	Normal Conditions ofTransport
OD...	Outside Diameter
SAR.	Safety Analysis Report (for packaging)
SS	Stainless Steel

1.0 GENERAL INFORMATION

1.1 Introduction

This Safety Analysis Report describes a reusable shipping package designed to protect radioactive material from both normal conditions of transport and hypothetical accident conditions as required by 10CFR71. The package is designated the Model 10-160B package.

1.2 Package Description

1.2.1 Packaging

The package consists of a steel and lead cylindrical shipping cask with a pair of cylindrical foam-filled impact limiters installed on each end. The package configuration is shown in Figure 1-1. Cask assembly drawings are included in Section 1.3. The internal cavity dimensions are 68 inches in diameter and 77 inches high. The cylindrical cask body is comprised of a 2 inch thick external steel shell and a 1 1/8 inch internal steel shell. The annular space between the shells is filled with 1 7/8 inch thickness of lead. The base of the cask consists of a 5½ inch thickness of flat circular steel plates (2½ and 3 inches) which are welded together. The cask primary lid also consists of a 5½ inch thickness flat circular steel plates (2½ and 3 inches) which are welded together. The primary lid is fastened to the cask body with twenty-four, 1 3/4 - 8 UNC bolts. There is a secondary lid in the middle of the primary lid. This secondary lid is attached to the primary lid with twelve, 1 3/4 - 8I UNC bolts. A 12 gauge stainless steel liner (0.105 inches) welded to the cask cavity and lid surface protects all accessible areas from contamination. Also, a steel thermal shield is welded to the exterior barrel of the cask and serves as protection during the fire accident.

The impact limiters are 102 inches in the outside diameter and extend about 12 inches beyond the outside wall of the cask. There is a 47½ inch diameter void at each end. Each limited has an external shell, fabricated from stainless steel which cans the foam and allows it to withstand large plastic deformation without fracturing. The volume inside the shell is filled with a crushable, shock and thermal insulating polyurethane foam. The polyurethane is sprayed into the shell and allowed to expand until the void is completely filled. The foam bonds to the shell, which creates a unitized construction for the impact limiters. The upper and lower impact limiters are held together with eight circumferentially located ratchet binders which secure the limiters to the cask. A general arrangement drawing of the package is included in Appendix 1.3. It shows the package dimensions as well as all materials of construction.

1.2.1.1 Containment Vessel

The containment vessel is defined as the inner steel shell of the cask body together with closure features comprised of the lower surface of the cask lid and the primary and secondary lid bolts.

1.2.1.2 Neutron Absorbers

There are no materials used as neutron absorbers or moderators in the package.

1.2.1.3 Package Weight

Maximum gross weight for the package is 72,000 lbs. including a maximum payload weight of 14,500 lbs.

1.2.1.4 Receptacles

There are no receptacles on this package.

1.2.1.5 Vent, Drain, Test Ports and Pressure Relief Systems

Pressure test ports with manual venting features exist between the twin O-ring seals for both the primary and secondary lids. This facilitate leak testing the package in accordance with ANSI N14.5.

The drain and vent ports are provided with same venting features for venting pressures within the containment cavity, which may be generated during transport, prior to lid removal. Each port is sealed with an elastomer gasket. Specification information for all seals and gaskets is contained in Chapter 3.

1.2.1.6 Lifting Devices

Lifting devices are a structural part of the package. The General Arrangement Drawing in Appendix 1.3 shows two lifting lugs provided for removal and handling of the cask. Three lid lifting lugs are used for removal and handling of the secondary and primary lid. Refer to Section 2.4.3 for a detailed analysis of the structural integrity of the lifting devices.

1.2.1.7 Tie-downs

From the General Arrangement Drawing shown in Appendix 1.3, it can be seen that the tie-down arms are an integral part of the external cask shell. Consequently, tie-down arms are considered a structural part of the package. Refer to Section 2.4.4 for a detailed analysis of the structural integrity of the tie-down arms.

1.2.1.8 Heat Dissipation

There are no special devices used for the transfer or dissipation of heat.

1.2.1.9 Coolants

There are no coolants involved.

1.2.1.10 Protrusions

There are no outer or inner protrusions except for the tie-down arms described above.

1.2.1.11 Shielding

Cask walls provide a shield thickness of 1 7/8 inches of lead and 3 inches of steel. Cask ends provide a minimum of 5 inches of steel. The contents will be limited such that the radiological shielding provided (nominally 3¼ inches lead equivalent based on Co-60) will assure compliance with DOT and IAEA regulatory requirements.

An optional, removable steel insert may be installed inside the cask to provide additional shoring and shielding for the cask contents. The insert fits closely to the inside walls of the cask, but is not attached to the cask nor the contents. It may vary in thickness between ½ inch and 1½ inch on the sides, and is open on the top and bottom. It is approximately ½ inch shorter than the cask cavity.

1.2.2 Operational Features

Refer to the General Arrangement Drawing of the package in Appendix 1.3. There are no complex operational requirements associated with this package.

1.2.3 Contents of Packaging

1.2.3.1 Cask Contents

The contents of the cask will consist of:

1) Greater than Type A quantities (up to a maximum of 3000 A_2) of radioactive material in the form of solids or dewatered materials in secondary containers.

2) Greater than Type A quantities (up to a maximum of 3000 A_2) of radioactive material in the form of activated reactor components or segments of components of waste from a nuclear power plant.

3) That quantity of any radioactive material which does not exceed 3000 A_2 and which does not generate spontaneously more than 100 thermal watts of radioactive decay heat.

4) The weight of the contents in the cask cavity will be limited to 14,500 lbs. If an insert is installed in the cavity, the maximum payload is reduced by the weight of the insert.

5) Transuranic Waste (TRU) with not more than 325 fissile gram equivalents (FGE) of fissile radioactive material up to a maximum of 3000 A_2.

1.2.3.2 Waste Forms

The type and form of waste material will include:

1) By-product, source, or special nuclear material consisting of process solids or resins, either dewatered, solid, or solidified in secondary containers. (See Section 4.2.1 for specific limitations). Contents containing greater than 20 Ci of plutonium must be in solid form.

2) Neutron activated metals or metal oxides in solid form.

3) Miscellaneous radioactive solid waste materials.

4) TRU wastes are limited as described in Appendix 4.10.2, Transuranic (TRU) Waste Compliance Methodology for Hydrogen Gas Generation. TRU exceeding the fissile limits of 10 CFR 71.15 must not be machine compacted and must have no more than 1% by weight of special reflectors.

10-160B GENERAL ARRANGEMENT

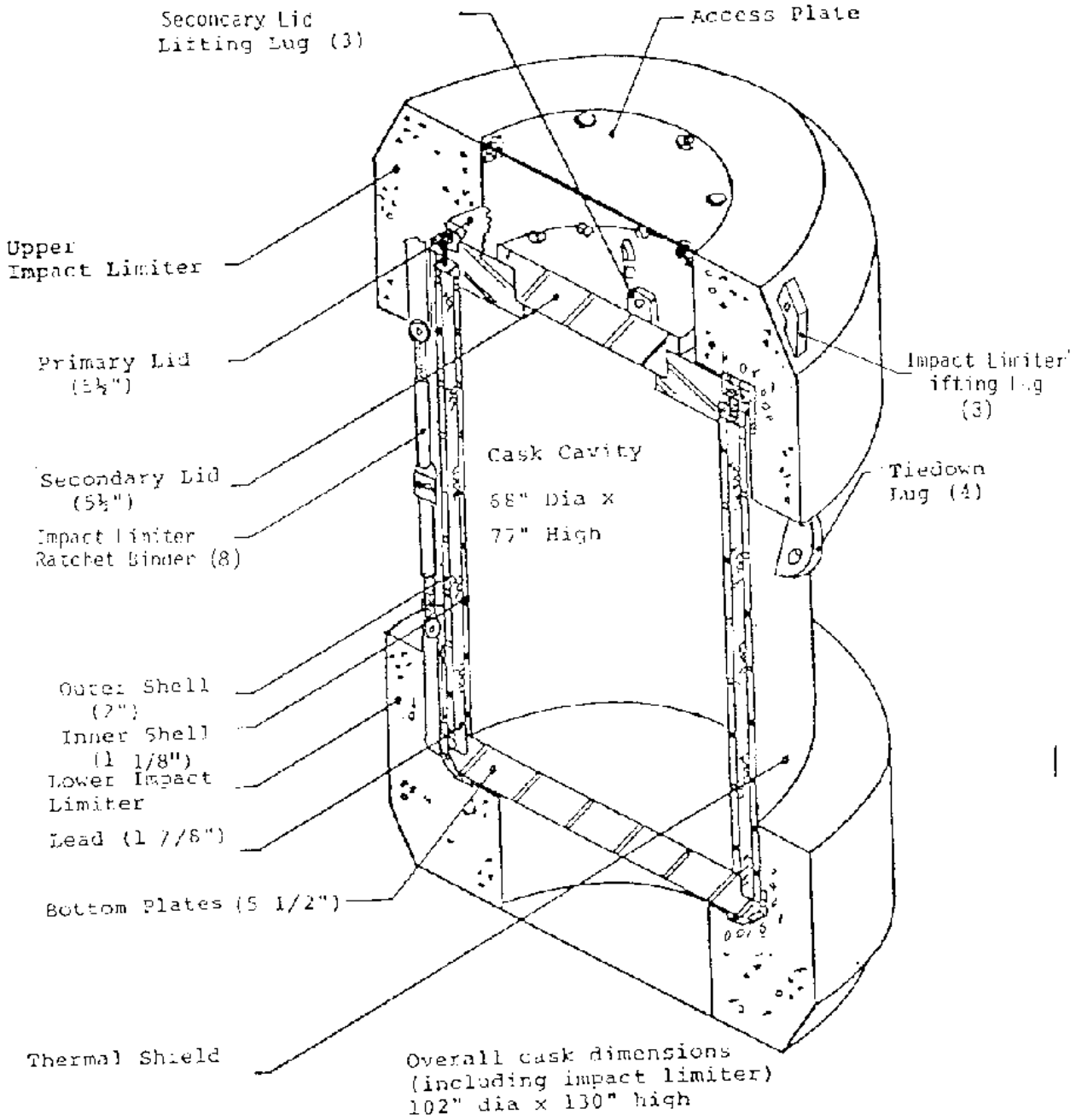

Figure 1-1

CNS 10-160B GENERAL ARRANGEMENT

Figure 1-1

1.3 Appendix

10-160B Shipping Cask Drawing

(withheld as security-related sensitive information)

2.0 STRUCTURAL EVALUATION

This Chapter identifies and describes the structural design of the CNS 10-160B packaging, components, and safety systems for compliance with performance requirements of 10 CFR 71 (Ref. 1).

2.1 Structural Design

2.1.1 Discussion

The package has been designed to provide a shielded containment vessel that can withstand the loading due to the Normal Conditions of Transport, as well as those associated with the Hypothetical Accident Conditions.

The CNS 10-160B assembly is designed to protect the payload from the following conditions: Transport environment, 30 Foot drop test, 40 inch puncture test, 1475°F thermal exposure, and transfer of dissipation of any internally generated heat. The design of the package satisfies these requirements.

Principal structural elements of the system consist of:

- Containment Vessel
- Lead Shielding
- Impact Limiters

These components are identified on the drawing as noted in Appendix 1.3. Their design and function in meeting the requirements of 10 CFR 71 are discussed below.

2.1.1.1 Containment Vessel

The cask is comprised of carbon steel (SA-516 Gr. 70 or SA-537 Class 2) shells, which envelop a lead shield, a steel base, and lids. The inner shell serves as the package containment boundary. The primary lid is attached to the cask with 24 1¾" - 8UN bolts. A secondary lid is attached to the primary lid with 12 equally spaced 1¾" - 8UN bolts. The lid-to-cask body and lid-to-lid interfaces each employ a pair of high temperature, solid silicone o-rings. All transport environment conditions as well as accident conditions (i.e., 30-foot drop, 40-inch puncture test requirements, etc.) are met with impact limiters installed as discussed in Section 2.1.1.3 below. All thermal loading and dissipation requirements are met as discussed in Section 3.0.

2.1.1.2 Shielding

The area between the two shells discussed in Section 2.1.1.1 is filled with lead. This lead shielding is subjected to a Gamma Scan inspection to assure lead integrity. The designed thickness assures that no biological hazard is presented by the package and all shielding requirements of 10 CFR 71 are met.

2.1.1.3 Impact Limiters

The impact limiters are designed to protect the package from damage during the 30 foot drop and to provide thermal protection during the hypothetical fire accident condition.

They are constructed of fully welded steel shells filled with foamed-in-place rigid structural polyurethane foam. The foam deforms and provides energy absorption during impact. Eight circumferentially located ratchet binders attached to the upper and lower impact limiters secures the limiters to the cask.

2.1.1.4 Summary

Detailed discussions of all components and materials utilized in the 10-160B Package including stress, thermal, and pressure calculations are contained in the applicable sections of this SAR. A drawing of the individual subassemblies and the 10-160B package can be found in Appendix 1.3.

2.1.2 Design Criteria

2.1.2.1 Normal and Accident Conditions of Transport

Regulatory Guide 7.6, "Design Criteria for the Structural Analysis of Shipping Cask Containment Vessels" (Ref. 2) was used in conjunction with Regulatory Guide 7.8, "Load Combinations for the Structural Analysis of Shipping Casks" (Ref. 3) to evaluate the package according to the requirements of 10 CFR 71.71 and 10 CFR 71.73. Table 2-1 summarizes the normal and accident conditions load cases.

1) Containment Vessel & Cask

The containment vessel is defined to be the inside steel shell and its closures. Regulatory guide 7.6 was used for the evaluation of the

Table 2-1

SUMMARY OF NORMAL AND ACCIDENT CONDITION LOADING[1]

Loading Condition	Ambient Temperature (°F)	Heat Load (watts)	Pressure (psia)		Stress Table[2]
			Internal	External	
NORMAL CONDITIONS					
Hot Environment	100	200	8.4	0	A2-31 & 32
Cold Environment	-40	0	11.2[3]	0	A2-29 & 30
Increased External Pressure	-20	0	0	20	A2-33 & 23
Minimum External Pressure	100	200	23.1	3.5	A2-35 & 36
Free Drop + Increased External Pressure	-20	0	0	20	A2-23 A2-25 A2-27
Free Drop + Minimum External Pressure	100	200	11.2[3]	0	A2-23 A2-25 A2-27
ACCIDENT CONDITIONS					
Free Drop + Increased External Pressure	-20	0	0	20	A2-13 A2-17 A2-21
Free Drop + Minimum External Pressure	100	200	11.2(3)	0	A2-13 A2-17 A2-21
Puncture + Increased External Pressure	-20	0	0	20	Page 2-74.3
Puncture + Minimum External Pressure	100	200	11.2(3)	0	Page 2-74.3
Fire	1475	200	31.2	0	A2-41 & 42

[1] These loading combinations are derived from the NRC Regulatory Guide 7.8, March 1989.

[2] See these tables for the stress analysis results of the corresponding loading conditions.

[3] Corresponds to the pressure differential between the atmospheric pressure (14.7 psi) and reduced external pressure (3.5 psi). This pressure is conservatively used in the load combinations instead of the maximum cask internal pressure of 8.4 psi.

containment vessel and the cask for both the normal conditions of transport and the hypothetical accident conditions. The yield and ultimate stress values of all materials of construction are obtained from Section II, American Society of Mechanical Engineers, Boiler and Pressure Vessel Code (BPVC). The design stress intensity value S_m, is the lesser of 2/3 yield or 1/3 ultimate strength. Table 2-4 summarizes primary limits for normal and accident conditions.

(2) **Impact Limiter Foam Strain**

The impact limiter is designed to absorb energy through inelastic deformation during the hypothetical accident conditions. Strain, rather than stress, is used as the limiting parameter to assure that the material does not bottom out. The maximum limiting strain was established as 70% since the stress and corresponding forces applied to the cask become large, and the "stiffness" of the impact system becomes large.

(3) **Brittle Fracture**

The primary structural components of the cask are fabricated with ASME SA 516, Grade 70, or ASME SA 537, Class 2 carbon steel with supplemental nil ductility temperature (NDT)
requirements. Fracture toughness requirements specified in NUREG/CR-1815, "Recommendations for Protection Against Failure by Brittle Fracture in Ferritic Steel Shipping Containers up to Four Inches Thick", (Ref. 4) are complied with. Section 2.6.2 evaluates the critical components of the cask.

Buckling

Buckling, per Regulatory Guide 7.6, is an unacceptable failure mode for the containment vessel. The intent of this provision is to preclude large deformations which would comprise the validity of linear analysis assumptions and quasi-linear stress allowables as given in paragraph C.5 of NRC Regulatory Guide 7.6.

Cask drop calculations show that the critical buckling stresses of the containment vessel and exterior shell are very high. Under service conditions, internal pressure would induce membrane biaxial tensile stress components in the containment vessel. These tensile stresses would tend to reduce compressive stresses due to hypothetical accident impact induced internal forces. Thus, under these conditions, the package would be less susceptible to buckling failure than under the conditions analyzed. Since no incipient buckling was predicted by the analysis, it may be safely concluded that buckling is not a probable failure mechanism for the 10-160B package.

The remainder of this subsection defines techniques and criteria used in subsequent section of this safety analysis report to demonstrate that containment vessel buckling does not occur.

Euler Column Buckling

Reference is made to "Formulas for Stress and Strain" by R.J. Roark, 5th Edition; (Ref. 5) Page 415. The critical buckling load, P_{cr} is calculated by:

$$\frac{Pcr}{A} = \frac{C\ \pi^2 E}{(L/r)^2}$$

Where:

C is the coefficient of constraint
C=1 for simply supported ends.
E is the modulus of elasticity.
L is the length of the cylinder.
r is the radius of gyration.
$I = Ar^2$ = moment of inertia.

The above equation could be written as follows:

$$Pcr = \frac{\pi^2 E I}{L^2}$$

$$E = 27.8 \times 10^6 \text{ psi}$$

$$I = \pi R^3 t$$

Where R = cylinder radius
t = cylinder thickness

Inner Shell

$$I_i = \pi (34.5)^3 (1) = 129{,}005 \text{ in}^4$$

$$Pcr_i = 5.97 \text{ X } 10^9 \text{ lbs}$$

Outer Shell

I_o = $\pi (37.625)^3(2)$ = 334,664 in^4

Pcr_o = 1.51×10^{10} lbs

Axial Stress Limits

Refer to Baker, Kovalesvky, Rish, Structural Analysis of Shells. 1981 Ed., (Ref. 6) page 230.

A thin-wall cylinder is considered "moderately long" if: $\gamma z > \frac{\pi^2 K_{co}}{2\sqrt{3}}$

Where γ is the correction factor dependent on R/t.

$$z = \frac{L^2}{Rt}\sqrt{1-\nu^2}$$

K_{co} = 1, for simply supported edges. (Conservative)

L = cylinder length

R = cylinder mean radius

t = cylinder mean thickness

ν = Poisson's ratio

The following two sets of properties correspond to the inner and outer shells of the cask side wall:

Inner Shell			Outer Shell		
t_i	=	1 in	t_o	=	2 in
R_i	=	34.5 in	R_o	=	37.625 in
L_i	=	77 in	L_o	=	78 in
ν	=	.3	ν	=	.3 in
z_i	=	163.94	z_o	=	77.13

Check value of $\frac{\pi^2 K_{co}}{2\sqrt{3}} = 2.85$

Figure 10-9, Page 230 (Ref. 6)

$R_i/t_i = 34.50$ yields $\gamma_i = .74$

$R_o/t_o = 18.81$ yields $\gamma_o = .8$

$$\left.\begin{array}{l}\gamma_i z_i = 121.32 \\ \gamma_o z_o = 61.70\end{array}\right\} \rangle\ 2.85$$

Both shells will be treated as moderately long cylinders.

From (ref. 6) Page 229

$$\sigma_e = \sigma_{cr} / \eta = K_c \frac{\pi^2 E}{12(1-\nu^2)} \left(\frac{t}{L}\right)^2$$

$$K_c = \frac{4\sqrt{3}}{\pi^2} \gamma z$$

$\sigma_{ei} = 360{,}906$ psi

and

$\sigma_{eo} = 715{,}482$ psi

HOOP STRESS LIMIT

(Ref. 6) PAGE 236

$$\sigma_h = \sigma_{cr}/\eta = k_p \pi \frac{2_E}{12\,(1-\nu^2)} \left(\frac{t}{L}\right)^2$$

where K_p is a function of z. (Page 237)

then

z_i = 163.94 $\longrightarrow$ K_{pi} = 10.5

z_o = 77.13 $\longrightarrow$ K_{po} = 8

σ_{hi} = 44,497 psi

and

σ_{ho} = 132,155 psi

Critical Buckling Stress

Critical buckling stress (σ_{cr}) for each of the above cases, can be found by solving the following equation (Ref. 6, page 265)

$$\sigma_e = \sigma_{cr}/\eta \quad \text{.....(1)}$$

Where η is the plasticity coefficient. For moderately long cylinders under uniform axial and hoop compressions this coefficient can be defined as follows:

For axial stresses

$$\eta = \sqrt{\frac{E_t E_s}{E}} \quad \text{.....(2)}$$

Where:

E_t = tangent modulus = $\frac{d\sigma}{d\in}$

E_S = secant modulus = $\frac{\sigma}{\in}$

σ_{cr} = critical stress

$\in$ = strain

The stress-strain relationship of A516 GR.70, (σ_y = 38,000 psi) between the proportional limit ($0.7\sigma_y$) and the yield point (σ_y) can be expressed by the following quadratic equation:

$$\sigma = A\ \varepsilon^2 + B\ \varepsilon + C \quad \text{.....(3)}$$

Where,

A = -1.6948×10^{10}

B = 6.0233×10^{7}

C = -1.5517×10^{4}

Figure 2.1.1 shows a plot of stress-strain curve thus constituted. Substitution of eqn. (3) into eqn. (2) yields the following expression for the plasticity coefficient,

$$\eta = \frac{\sqrt{(2A\varepsilon + B)(A\varepsilon + B + c/\varepsilon)}}{E}$$

Using equations (1) and (4), inelastic buckling stress for any elastically calculated buckling stress can be calculated for 10-160B Cask, these stresses are calculated as follows:

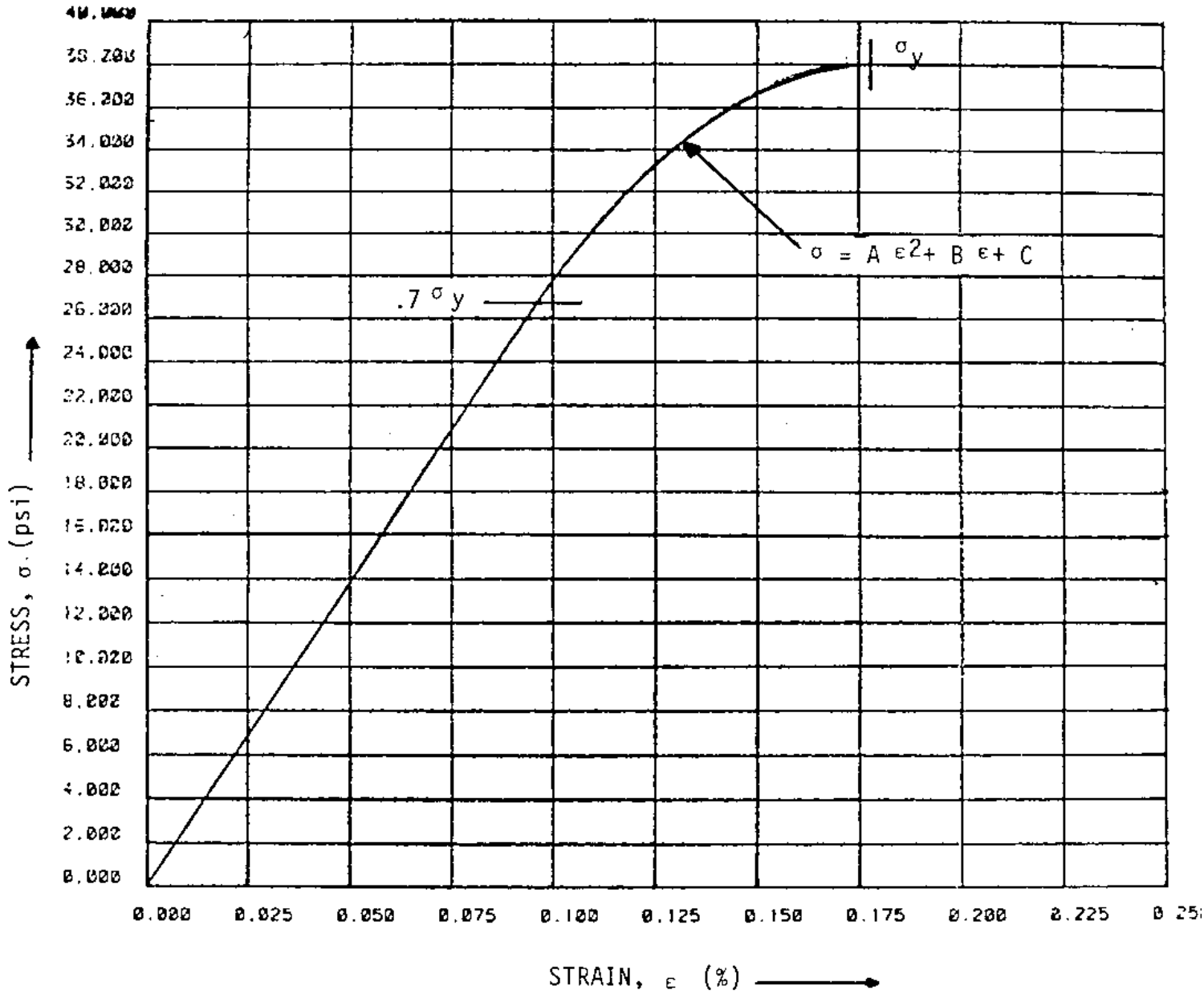

Figure 2.1.1
Constituted Stress-Strain Curve
For A516 GR.70

Axial

	Inner	Outer
σ_e, psi	360,906	715,482
$\in_{cr}$	1.7653×10^{-3}	1.774×10^{-3}
η	0.1051	0.0539
σ_{cr}, psi	37,921	37,948

Hoop

	Inner	Outer
σ_h, psi	44,497	132,155
$\in_{cr}$	1.165×10^{-3}	1.6928×10^{-3}
η	0.854	0.2875
σ_{cr}, psi	37,999	37,989

The buckling stress limits are summarized in the following table:

	Inner Shell	Outer Shell
Axial Membrane	37,921 psi	37,948 psi
Hoop Membrane	37,999 psi	37,989 psi

Buckling evaluation of the cylindrical shells, for combined loading, is done using the technique described in (Ref. 6), Page 275 accordingly.

$\sigma_{cr} - \eta\sigma_i = o$

Where σ_{cr} is the combined load critical buckling stress intensity.

η is the plasticity correction Factor $\sqrt{\frac{E_s.E_t}{E}}$

σ_i is elastic buckling stress intensity

$$\sigma_i = \sqrt{(\sigma_e)^2 + (\sigma_h)^2 - (\sigma_e\sigma_h)}$$

σ_{ii} = 340,843 psi

σ_{io} = 659,413 psi

Values for both shells are as follows:

	Inner	Outer
σ_e psi	360,906	715,482
σ_H psi	44,497	132,155
σ_i psi	340,843	659,413
$\in_{cr}$	1.7639×10^{-3}	1.77347×10^{-3}
η	0.1112	0.0576
σ_{cr} (Combined Load), psi	37,911	37,949

The largest stress intensity under the hypothetical accident condition in the outer shell is 16,880 psi (see Table 2-11) and in the inner shell is 21, 120 psi (See Table 2-20) which are clearly well below the corresponding critical buckling stresses. Hence, buckling of shells in the 10-160B cask is not a possible mode of failure.

2.1.2.2 Tie-downs and Lifting Devices

(1) Cask and Lid Lifting Devices

10 CFR 71.45 (a) requires that the cask lifting devices be capable of supporting three times the weight of the loaded package without generating any stress in the cask in excess of the yield strength. No stresses shall be generated in any material in excess of yield strength.

Maximum stresses and safety factors are computed in Section 2.4.3.

(2) Tie-downs

10 CFR 71, 7.45 (b) paragraph (1) requires that the tie-downs be designed such that no stresses exist in any material of the package in excess of yield strength for the specified 10-5-2G loading condition. Maximum package stresses and factors or safety are computed in Section 2.4.4.

(3) Failure of the Tie-down and Lifting Devices

Any tie-down, cask lifting or lid lifting device must be designed such that failure of the device under excessive loads will not impair the ability of the package to meet the other requirements specified in 10 CFR 71.45.

Sections 2.4.3 and 2.4.4 demonstrate that the failure load for tiedown and lifting components, the shielding and containment requirements are met.

Failure is predicted for an equivalent state of stress which produces a maximum shear stress of:

$$\sigma \text{ failure} = \frac{1}{\sqrt{3}} S_u = 0.577\, S_u$$

Where S_u = Material ultimate tensile strength

2.2 Weights and Center of Gravity

The weight breakdown of the package is as follows:

Cask Body		47,000 lbs
Outer Shell	10,600	
Inner Shell	6,000	
Lead Shell	13,800	
Base Plate	7,200	
Upper Ring	1,050	
Primary Lid	5,300	
Secondary Lid	2,150	
Tie-Down Lugs (4)	200	
Lifting Lug Pads	350	
Thermal Shield	350	
Impact Limiters		10,500 lbs
Upper	5,300	
Lower	5,200	
Net Package Payload		14,500 lbs (See Note)
	Total Package Weight	72,000
	GROSS PACKAGE WEIGHT	72,000

The center of gravity of the package is located at the geometric center of the package.

Note. If an optional insert is installed in the cavity, the maximum payload is reduced by the weight of the insert.

2.3 Mechanical Properties of Materials

All major cask body components are fabricated of carbon steel, including the shells and lids; and are included in Section II of the ASME BPVC. The basic material properties of the lid and shell components are shown in Table 2-2. The temperature variation of these properties can be obtained from Appendix I of Section III, ASME BPVC. The basic properties of the other steel components are shown in Table 2-3 as a function of temperature. The allowable stress intensity, S_m, is the lesser of one third ultimate or two-thirds of yield at a given temperature. The primary stress allowables are tabulated in Table 2-4.

The impact limiters are constructed of rigid, self-extinguishing, polyurethane foam, foamed in-place. Figure 2-1 represents the stress-strain curve for the foam used for this package. The tolerance limits (10%) are shown along the nominal curve. The specification for the foam is located in Appendix 8.3.1.

2.4 General Standards for All Packages

This section demonstrates that the general standards and loading conditions for all packages are met.

2.4.1 Chemical and Galvanic Reactions

The materials from which the packaging is fabricated (steel, lead, and polyurethane foam) along with the contents of the package will not cause significant chemical, galvanic, or other reaction in air, nitrogen, or water atmospheres.

2.4.2 Positive Closure

The positive closure system has been previously described in Section 1.2.1.

Table 2-2

MECHANICAL PROPERTIES OF MATERIALS USED IN FABRICATION OF 10-160B CASK

MATERIAL	TYPE, CLASS OR GRADE	S_y (psi)	S_u (psi)	S_m (psi)	E (psi)	α in/in °F
SA-516	70	38,000	70,000	23,300	29.5×10^6	6.41×10^{-6}
SA-537(1)	2	55,000	85,000(2)	28,300	29.5×10^6	5.42×10^{-6}
SA-517	F	100,000	115,000	38,300	29.5×10^6	6.20×10^{-6}
A-354	BD	130,000	150,000	-	29.9×10^6	6.50×10^{-6}
A-540(3)	B21, Class 1	150,000	165,000	-	29.7×10^6	5.42×10^{-6}

Nomenclature: S_y = Yield Stress of the Material
S_u = Ultimate Stress of the Material
S_m = Allowable Membrane Stress Intensity of the Material
E = Modulus of Elasticity of the Material
α = Mean Coefficient of thermal Expansion

NOTES:

(1) Alternate material for inner shell and bolting ring. This material has a higher allowable than SA-516 Gr. 70 for all loading conditions. Therefore, the allowable values for SA-516 are used throughout in the SAR.

(2) SA-537 Class 2 has S_u in the range of 75,000 to 95,000 psi. A minimum S_u of 85,000 psi has been specified for the CNS10-160B cask.

(3) Alternate material for primary and secondary lid bolts. This material has a higher allowable than A-354 Gr. BD for all loading conditions. Therefore, the allowable values for A-354 are used throughout in the SAR.

TABLE 2-3
MATERIAL PROPERTIES VERSUS TEMPERATURE

Material	Type Class or Grade	Temp. F	Sy (psi)	Su (psi)	Sm (Psi)	E (psi) (5)	α in/in F (4)
SA-516	70	70	38,000	70,000	23,300	29.5E6	6.50E-6
(2)		100	38,000	70,000	23,000	29.5E6	6.50E-6
		200	34,600	70,000	23,100	28.8E6	6.67E-6
		300	33,700	70,000	22,500	28.3E6	6.87E-6
		400	37,600	70,000	21,700	27.7E6	7.07E-6
		500	30,900	70,000	20,500	27.3E6	7.25E-6
SA-517	F	70	100,000	115,000	38,300	29.5E5	6.27E-6
(1)		100	100,000	115,000	38,300	29.5E6	6.27E-6
		200	95,500	115,000	38,300	28.8E6	6.54E-6
		300	92,500	115,000	38,300	28.3E6	6.78E-6
		400	89,800	115,000	38,300	27.7E6	6.98E-6
		500	87,600	115,000	38,300	27.3E6	7.16E-6
A-354	BD	100	130,000	150,000	-------	29.9E6	6.20E-6
(3)							
LEAD	Chemical	-40	-	-	-	2.46E6	15.56E-6
B-29		-20	-	-	-	2.43E6	15.65E-6
(6)		70	-	-	-	2.27E6	16.06E-6
		100	-	-	-	2.21E6	16.22E-6
		200	-	-	-	2.01E6	16.70E-6
		300	-	-	-	1.85E6	17.33E-6
		400	-	-	-	1.70E6	18.16E-6
		500	-	-	-	1.52E6	19.12E-6

NOTES:
(1) From Code Case N-71-11
(2) From Section VIII, Division II, ASME B&PVC
(3) From ASTM Specification
(4) From Table 1-5.0, Section III, ASME B&PVC
(5) From Table 1-6.0, Section III, ASME B&PVC
(6) From NUREG/CR-0481 (Ref. 25)

TABLE 2-4
PRIMARY STRESS INTENSITY ALLOWABLES

Material	Type Class or Grade	Sm (psi)	Su (psi)	Normal Condition		Accident Condition	
				Membrane (psi)	Membrane + Bending (psi)	Membrane (psi)	Membrane + Bending (psi)
SA-516	70	23,300	70,000	23,300	34,950	49,000	70,000
SA-517	F	38,300	115,000	38,300	57,400	80,500	115,000
A-354	BD	-	150,000	-	-	-	-

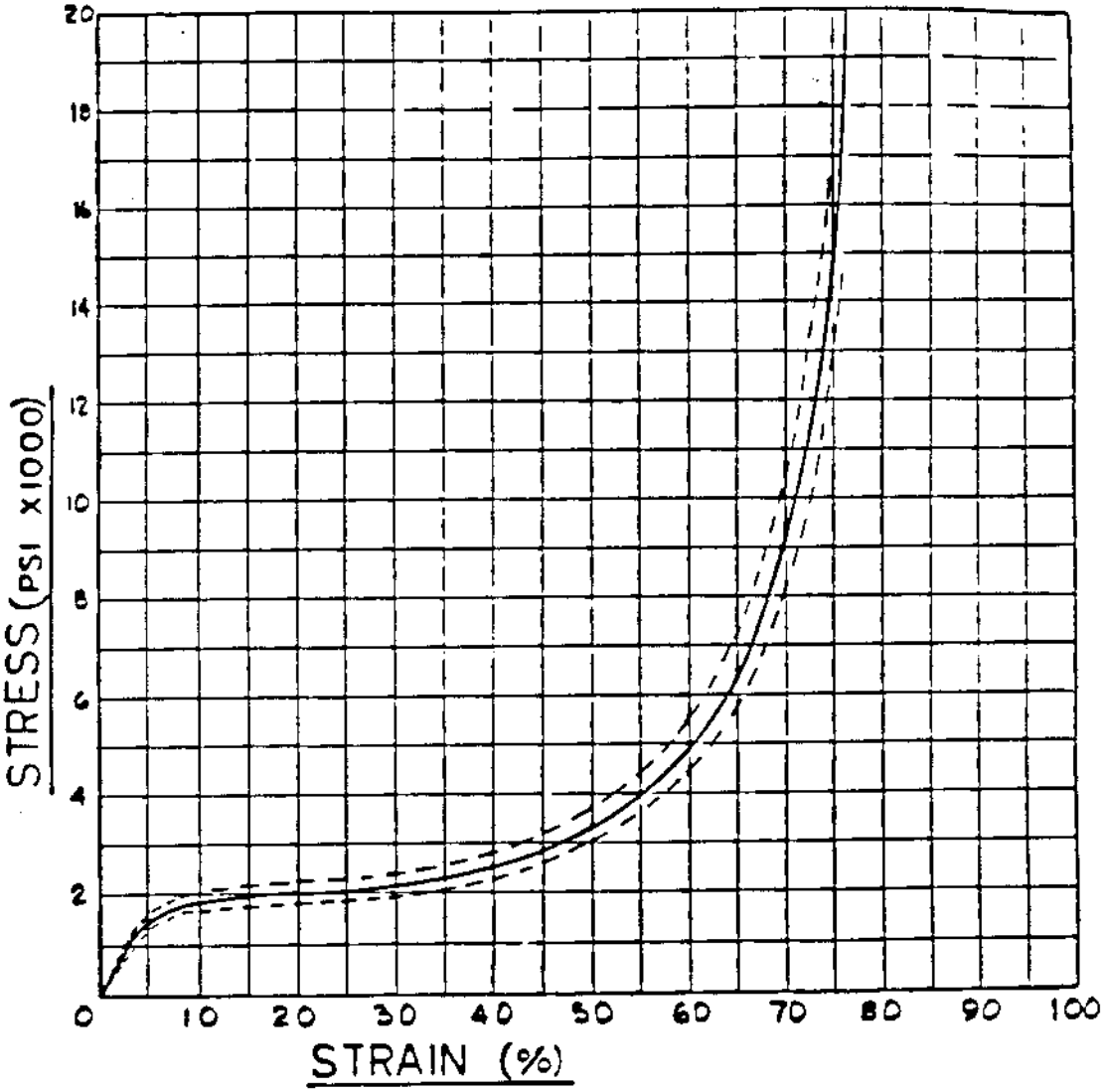

Figure 2-1

Compressive Stress-Strain Curve for Foam

2.4.3 Lifting Devices

The 10-160B cask is provided with two (2) removable lifting lugs (Figure 2-2) attached to a 2 inch plate welded to the outer shell of the cask by which the cask and payload can be lifted. The lid is provided with three (3) lifting lugs by which the lid may be removed from the cask. The lid lifting lugs are covered by the impact limiter and the cask lifting lugs are removed during the transportation. Hence, neither lugs can be inadvertently used for the tie-down. A stress summary of the lifting devices is tabulated in Table 2-5.

The load requirements for lifting devices are defined in 10 CFR 71, paragraph 71.45 subpart "a" as, "… must be designed with a minimum safety factor of three against yielding when used to lift the package in the intended manner."

Cask Lifting Lugs

The lugs can be used only with impact limiters removed; for conservatism, the weight of the impact limiters will be included in the following analysis. Therefore, the total lifted weight is:

W = 72,000 lbs.

The lug load is:

$$P = \frac{72{,}000}{2\ \text{Lugs}} = 36{,}000\ \text{lbs/lug.}$$

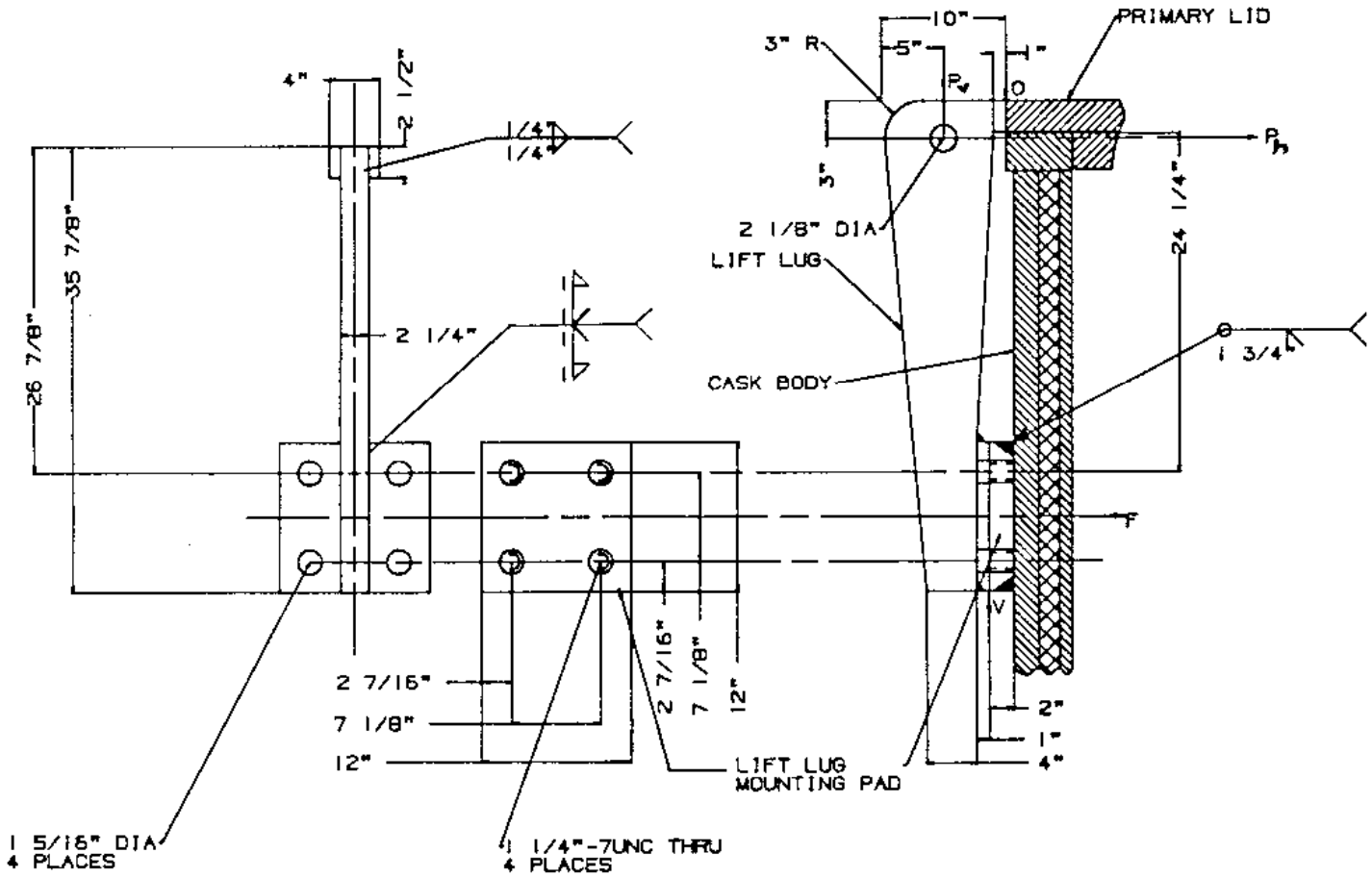

Figure 2-2
Cask Lift Lug

TABLE 2-5

STRESS SUMMARY OF LIFT LUGS AND WELDS

Material	Shear Stress (psi)	Direct Stress (psi)	Stress Intensity (psi)	Stress Allowable (psi)	Safety Factor (1)
Steel of Cask Lug	---	3,027	3,027	12,667	4.20
	4,129	---	---	7,309	1.77
Weld	1,819	---	3,638	7,309	3.48
	1,819	---	---	7,309	4.02
Steel of Lid Lug	870	2,004	2,654	12,667	4.77
	870	---	---	7,309	8.40
Weld	159	000	000	7,309	45.97
Bolts	37,152	1,161	37,737	75,010	1.99
Bolt Holes (Threads)	1,515	---	---	7,309	4.83

A – Shear in weld of mounting plate to cask body

Each mounting plate is attached to the outer shell of the cask with a 1.75" full penetration weld all around. The weld properties are as follows:

Weld length, L_w = 4 x 12 = 48"

Weld throat thickness, t_w = 1 ¾ x .707 = 1.24"

Weld area, A_w = 48 x 1.24 = 59.39 in^2

The weld shear stress, $\tau_w = \frac{P}{A_w}$

$$\tau_w = \frac{36{,}000}{59.39} = 606 \text{ psi}$$

Allowable stress in pure shear is 1/3 x .577 x S_y =
1/3 x .577 x 38,000 = 7,309 psi

$$\text{S.F.} = \frac{7{,}309}{606} = 12.06$$

Stress Intensity of Weld

2 x 606 = 1,212 psi

$$\text{S.F.} = \frac{1/3 \times 38{,}000}{1{,}212} = 10.45$$

Shear in weld of lift lug

Each lift lug is attached to a base plate by a 1-inch weld. The weld properties are as follows:

Weld length, L_w = (2 x 12) + (2 x 2) = 28"

Weld throat thickness, t_w = .707 x 1 = .707"

Weld area, A_w = 28 x .707 = 19.8 in^2

The weld shear stress, $\tau_w = P/A_w$

τ_w = 36,000/19.8 = 1,819 psi

Allowable stress in pure shear is
1/3 x .577 x 38,000 = 7.309 psi

S.F. = 7,309/1,819 = 4.02

Stress intensity of weld = 2 x 1,819 = 3,638 psi

S.F. = (1/3 x 38,000)/3,638 = 3.48

<u>B – Bolt stresses</u>

Each lifting ear is attached to the cask mounting plate, as shown in Figure 2-2 using four (4) 1-1/4-7 UNC –2A, 2 –3/4-inch-long ASTM 354 grade BD Hex head bolts. The stress area for each bolt is 0.969 in^2.

The shear force, V, will be carried by four bolts, so the shear force acting on the bolts is, V = 36,000 x 3 = 108,000 lbs.

Nominal shear stress, $\tau_b = \frac{108{,}000}{4\,(.969)} =$

τ_b nom. = 27,864 psi

Maximum shear stress in the bolts will be 4/3 (four-thirds) the nominal shear stress, so $\tau_b = \frac{4 \text{ x } 27864}{3}$

τ_b = 37,152 psi

The tensile force, F, will be carried by all four bolts.

The horizontal component of the force acting on the cask lifting lug is,

108,000/tan 60° = 62,354

Summation of moments about point 0.

$30.4375\ F + 3P_h - 5\ P_v + 2\ V = 0$

$$F = \frac{5\,(108{,}000 - 2\,(108{,}000) - 3\,(62{,}354)}{30.4375}$$

F = 4,499 lbs

Therefore, tensile stress, $\sigma_b = F/A_b$

σ_b = 4,499/4 (.969) = 1,161 psi

Maximum principal stresses in the bolt are found by

$$\sigma_p = \sigma_b/2 \pm \sqrt{(\sigma_b/2)^2 + (\tau_b)^2}$$

$$\sigma_p = 1{,}161/2 \pm \sqrt{(1{,}161/2)^2 + (37{,}152)^2}$$

σ_p = 37,737 psi

S.F. = (.577 x 130,000)/37,737 = 1.99

c – Threads – Cask Metal

Because the cask material is weaker than the bolt material, failure will occur at the root of the cask material threads. From Bickford, John H., an introduction to the design and behavior of bolted joints, Marcel Bekker, Inc. 1981, pp. 272-273, the equations for shear area and the length of thread engagement required to develop full strength of the threads are:

$$A_{TS} = (\pi)(n)(L_e)(D_{min})[\ 1/2n + 0.57735\ (D_{min}-E_{nmax})]$$

$$L_e = [S_{st}(2A_s)][(s_{nt})(\pi)(n)(D_{min})[(1/2n) + 0.57735(D_{min} - E_{nmax})]]$$

Where:

D_{min} = Min. O.D. of bolt, in
= 1.25 in.

E_{nmax} = Max. P.D. of cask threads, in.
= 1.157 in.

S_{st} = Tensile strength of bolt material, psi
= 150,000 psi

n = Threads per inch
= 7.0 threads/in

As = Stress area of bolt threads, in^2
= 0.969 in^2

S_{nt} = Tensile strength of cask material, psi
= 70,000 psi

A_{TS} = Shear area at root of cask threads, $in.^2$
L_e = Length of thread engagement required to develop full strength, in.

L_e = $[(150{,}000)(2)(0.969)]/[\pi(70{,}000)(7)(1.25)[1/14+0.57735(1.25 - 1.157)]]$

L_e = 1.21 in. deep

A_{TS} = $(\pi)(n)(L_e)(D_{min})[1/2n + 0.57735(D_{min} - E_{nmax})]$

A_{TS} = 2.97 $in.^2$

A_{TS} = 2.97 $in.^2$

The bolt tension was determined as 6.257 lbs resulting in shear stress at the threads of:

$$\tau \text{ thread shear} = F_{bolt}/A_{TS} = \frac{4.499}{2.97}$$

$$\tau = 1{,}515 \text{ psi}$$

The allowable shear stress is (1/3)(.577)(S_y), where the yield stress for the cask body material is 38,000 psi.

$$\tau_{allowable} = (1/3)(.577)(38{,}000) = 7{,}309 \text{ psi}$$

The associated safety factor is:

$$\text{S.F.} = \frac{7{,}309}{1{,}515} = 4.83$$

<u>d – Lug Stresses</u>

Lug Thickness, t = 2 ¼”
Effective lug width, W = 5.29” at weld location

<u>Tension</u>

$$\sigma_t = \frac{P}{EffectiveArea} = \frac{36{,}000}{2\,1/4(5.29)} = 3{,}027 \text{ psi}$$

$$\text{S.F.} = \frac{38{,}000}{3x3{,}027} = 4.20$$

Shear out of lug

V = 36,000 lbs.
Plate thickness, t = 2 ¼"
Hole radius, r_i = 1,0625"
L = 3 – 1.0625 = 1.9375"
No. of shear faces, N=2
A_s=N . L . b = 2 ¼ x 1.9375 x 2 = 8.72 in^2

Shear stress, $\tau = \frac{V}{A_S} = \frac{36,000}{8.72} = 4,129$ psi

$$F.S. = \frac{.577 \times 38,000}{3 \times 4,129} = 1.77$$

e – Lid Lift Lug stresses

Lug thickness, t = 1"
Lid weight, W = 4,550 + 1,650 = 6,200 lbs.
Lug width, w = 5.25"
Lug height, h = 4.25"
No. of lugs = 3

Tension

σ_t = W/(Effective Area) = 6,200/(3 x (5.25 – 1.125)) = 501 psi
Apply a stress concentration factor of 4.
σ = 501 x 4 = 2,004 psi
S.F. = 38,000/(3 x 2,004) = 6.32

Shear out of lug

L = $1.75 - \frac{1.125}{2}$ = 1.1875”

V = Lid weight/No. of lugs = 6,200/3

N = 2

t = 1”

A_s = N.L.t = 2 x 1.1875 x 1= 2.375 in^2

τ = $V/A_s = \frac{6{,}200/3}{2.375}$ = 870 psi

S.F. = $\frac{38000 \text{ x } .577}{870 \text{ x } 3}$ = 8.4

Stress intensity, S.I. = $2\sqrt{\tau^2 + (\sigma/2)^2}$

$2\sqrt{(870)^2 + \frac{2{,}004^2}{2}}$ = 2,654 psi

S.F. = $\frac{38{,}000}{3 \text{ x } 2{,}654}$ = 4.77

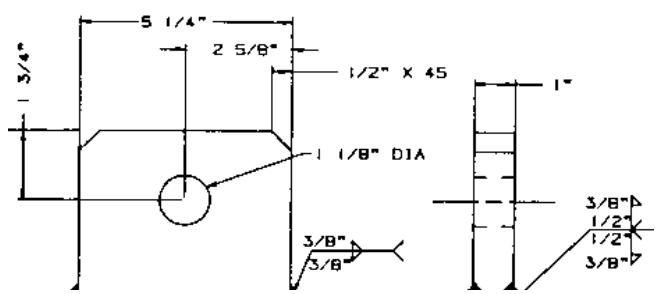

Shear in weld

Weld length, L = (5.25 x 2) = 10.5”
Weld thickness, t = (2 x .5 x .707) + (2 x .375 x .707) = 1.237”
Weld area, A_w = 10.5 x 1.237 = 12.99 in^2
τ_w = 6,200/(3 x 12.99) = 159 psi
S.F. = (38,000 x .577)/(3 x 159) = 45.97

2.4.4 Tie-Down Devices

The tie-down system for transporting the package is designed to load conditions defined in 10 CFR 71, paragraph 71.45(b). This load condition is defined as follows: "The system must be capable of withstanding, without generating stress in any material of the package in excess of its yield strength, a static force applied to the center of gravity of the package having a vertical component of two times the weight of the package and its contents, a horizontal component along the direction in which the vehicle travels of 10 times the weight of the package with its contents and a horizontal component in the transverse direction of five times the weight of a the package with its contents."

The 10-160B cask has been provided with 4 tie-down lugs welded to the cask's outer shell. The tie-down force is calculated by considering the equilibrium of forces and moments acting on the impact limiter and the cask as one rigid body. This approach is more conservative than that of considering the equilibrium of forces on the cask without the impact limiter. The impact limiter increases the moment arms of the overturning moment, thereby resulting in larger cable loads.

Each component used in the tie-down arrangement is designed and evaluated for the loading conditions described in 10 CFR 71.45 (b). For the purpose of this analysis, the package is assumed to weigh 72,000 lbs.

The results of the analysis verify that the tie-down system is capable of withstanding the above mentioned forces, without generating stress in any part of the packaging in excess of its yield strength. The analysis is subdivided into individual sections dealing with: Loads acting on the lugs, and lug stresses. A stress summary of the tie-down devices is tabulated in Table 2-7.

Table 2-5.1

Stress Summary of Tie-Downs

Component	Shear Stress (psi)	Direct Stress (psi)	Bending Stress (psi)	Stress Intensity (psi)	Allow Stress (psi)	Safety Factor (psi)
Tie-Down Lug	45,252.7	---------	----------	----------	57,700	1.28
	10,414.6	16,313	8900.31	32,704.24	100,000	3.06
Weld Stress	21,195.1	----------	----------	----------	57,700	2.72

2.4.4.1 Tie-down Load Evaluation

The tie-down arrangement of the 10-160B cask to the vehicle is as shown in Figure 2-3. The loads in the tie-down cables are obtained by statically applying the required 10W, 5W and 2W loads on the cask center of gravity along X, Z, and Y-directions respectively. The total load in the cables is obtained as the sum of the cable loads under each of these load conditions.

Cable Load Under X-Direction Loading

Due to negative X-direction loading, two of the four cables, namely cables 1 and 2, will be slack and the remaining two will carry the load. Due to symmetry, both cables 3 and 4 will carry equal loads. The magnitude of the load in each cable, T_x, can be calculated by moment balance about point A and by summing forces in the X-direction.

$\Sigma F_x = -10W + 2S_x + 2T_xB_x = 0, \rightarrow S_x = 5W - T_xB_x$.....(Eq. A)

$\Sigma M_a = 10Wc - 2B_xT_xh - 2B_yT_xa - WR_o - 2S_xb = 0$.....(Eq. B)

Eq. A into Eq. B yields the following:

$$Tx = \frac{-10Wc + WR_o + 10Wb}{-2B_xh - 2B_ya + 2B_xb}$$

Where

$B_x = L_x / \sqrt{L_x^2 + L_y^2 + L_z^2}$

L_x = X-component of cable length
L_y = Y-component of cable length
L_z = Z-component of cable length

S_x = X-component of shear block force
S_z = Z-component of shear block force

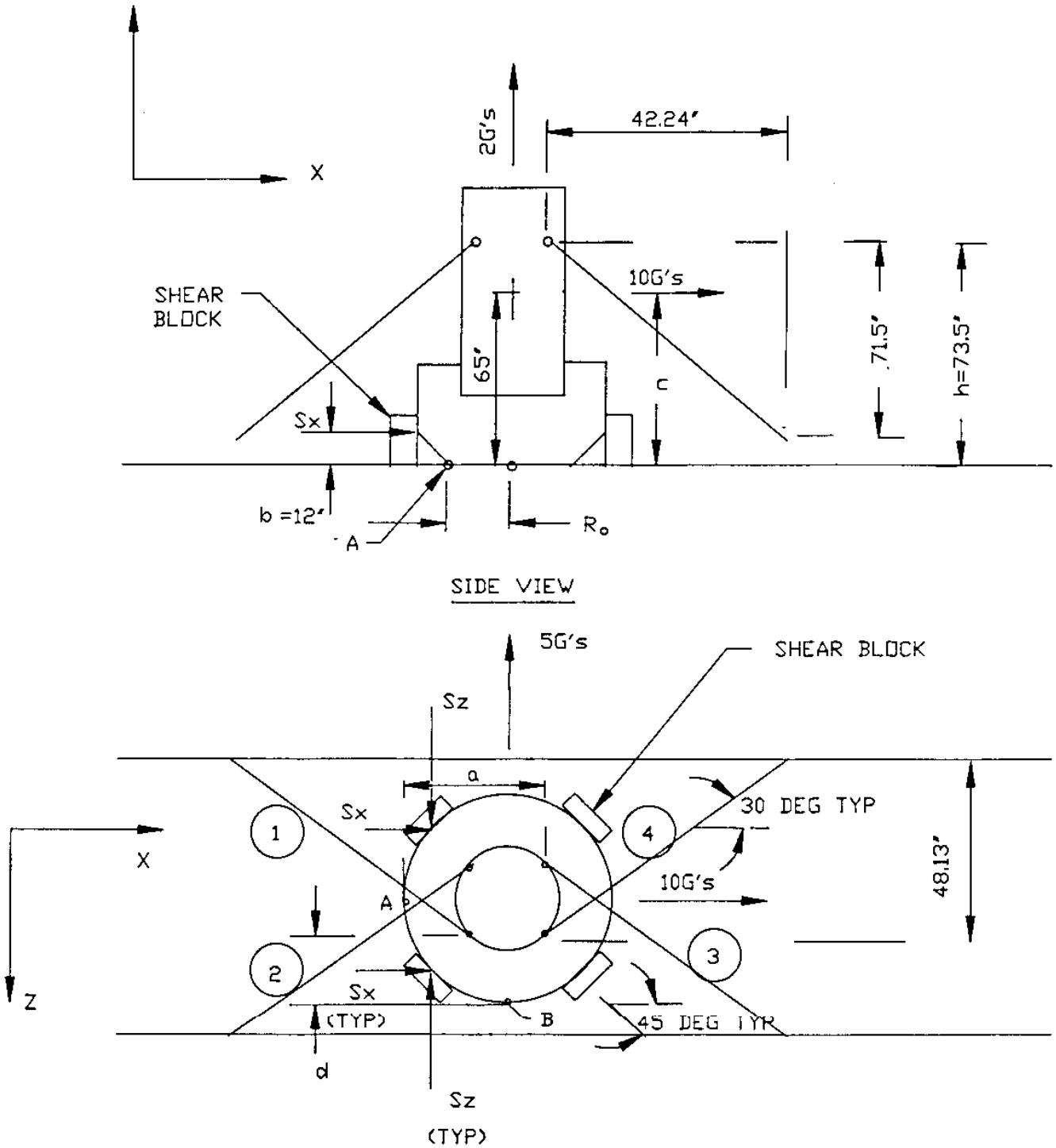

Top View
Figure 2-3
Tie-Down Arrangement

$W = 72{,}000$ lbs.

$B_x = 42.24/\sqrt{(42.24)^2 + (71.5)^2 + (48.13)^2}$

$B_x = .4401$

$B_y = L_y/\sqrt{L_x{}^2 + L_y{}^2 + L_z{}^2}$

$B_y = 71.5/\sqrt{(42.24)^2 + (71.5)^2 + (48.13)^2}$

$B_y = .7449$

$h = 73.5$”

$b = 12$”

$a = R_o + R_L \cos 30°$

$c = 65$”

R_o = Impact limiter radius

$R_o = 45$”

R_L = Radium extended to the tie-down lug

$R_L = 41.625$”

$a = 45 + 41.625 \cos 30° = 81.05$”

$h = 73.5$”

$$T_x = \frac{-10(72{,}000)(65) + 72{,}000(45) + 10(72{,}000)(12)}{-2(.4401)(73.5) - 2(.7449)(81.05) + 2(.4401)(12)}$$

$T_x = 199{,}679.78$ lbs.

We thus have:

$T_{1x} = T_{2x} = 0,\ T_{3x} = T_{4x} = 199{,}679.78$ lbs.

Eq. A. yields the following:

$S_x = 5(72{,}000) - (199{,}67.78)(.4401) = 272{,}120.93$ lbs.

We thus have:

$S_{1x} = S_{2x} = S_{1z} = S_{2z} = 272{,}120.931$ lbs.

Cable Load under Z-Direction Loading

Due to negative Z-direction loading, two of the four cables, namely cables 2 and 3, will be slack and the remaining two cables will carry equal loads. The magnitude of the load in each cable, T_z, can be calculated by moment balance about point B and by summing the Forces in the Z-direction.

$$\Sigma F_z = 5W - 2T_zB_z - 2S_z = 0 \rightarrow S_z = \frac{5W}{2} - T_zB_z \quad \text{.....(Eq. C)}$$

$$\Sigma M_B = 5Wc - 2B_zT_zh - 2B_yT_zd - WR_o - 2S_zb = 0 \quad \text{..... (Eq. D)}$$

Eq. C into Eq. D yields the following:

$$T_z = \frac{-5Wc + WR_o + 5b\,W}{-2B_zh - 2B_yd + 2bB_z}$$

$d = R_o - R_L \sin 30°$

$d = 45 - 41.625 \sin 30° = 24.19"$

$$B_z = L_z / \sqrt{L_x^2 + L_y^2 + L_z^2}$$

$$B_z = 48.13 / \sqrt{(42.24)^2 + (71.5)^2 + (48.13)^2}$$

$B_z = .5014$

$$T_z = \frac{-5(72{,}000)(65) + (72{,}000)(45) + 5(12)(72{,}000)}{-2(.5014)(73.5) - 2(.7449)(24.19) + 2(12)(.5014)}$$

$T_z = 162{,}116.6$ lbs.

We thus have:

$T_{2z} = T_{3z} = 0$, $T_{1z} = T_{4z} = 162{,}116.6$ lbs.

$$S_z = \frac{5}{2}(72{,}000) - (162{,}116.6)(.5014)$$

$S_z = 98{,}717.24$ lbs.

We thus have:

$S_{2z} = S_{3z} = S_{2x} = S_{3x} = 98{,}717.24$ lbs.

Maximum load per shear block = $\sqrt{S_{2x}^2 + S_{2y}^2 + S_{2z}^2}$

Maximum load per shear block = 139,607.26 lbs.

Cable Load Under Y-Direction Loading

Due to negative Y-direction loading, all of the four cables are effective and because of symmetry, they carry equal loading. The magnitude of the loading, T_y, can be calculated by force balance along the Y-direction.

$\Sigma F_y = 2W - 4B_yT_y = 0$

$T_y = W/2B_y$

$T_y = 72{,}000/(2 \times .7449)$

$T_y = 48{,}329$ lbs.

We thus have,

$T_{1y} = T_{2y} = T_{3y} = T_{4y} = 48{,}329$ lbs.

Cable Load Under Combined Loading

To obtain the load under the combined loading of 10G, 5G, and 2G along X, Z, and Y-directions, respectively, the loads in a particular cable under these loadings can be added together which yields the following:

$T_1 = T_{1x} + T_{1y} + T_{1z} = 0 + 48{,}329 + 162{,}116.6 = 210{,}445.6$ lbs.

$T_2 = T_{2x} + T_{2y} + T_{2z} = 0 + 48{,}329 + 0 = 48{,}329$ lbs.

$T_3 = T_{3x} + T_{3y} + T_{3z} = 199{,}679.78 + 48{,}329 + 0 = 248{,}008.78$ lbs.

$T_4 = T_{4x} + T_{4y} + T_{4z} = 199{,}679.78 + 48{,}329 + 162{,}116.6$

$T_4 = 410{,}125.38$ lbs.

The largest tension under the combined loading occurs in cable 4 and is equal to 410,125.38 lbs. (5.7 times the weight of the cask). The Tie-down arrangement is designed to withstand this loading without generating stress in excess of its yield strength.

2.4.4.2 Tie-Down Stress Evaluation

Tie-Down Lug Stresses

Four tie-down lugs are constructed from 2.5" thick A517 grade F, the tie-down lug (Figure 2-4 is analyzed for shear-out, tension, and bending and it is shown that under these conditions, stresses nowhere in the lug exceed the yield strength of the material.

Shear Out of Lug

The maximum shear stress in the lug is calculated as follows:

Shear force, V = 410,125.38 lbs

Lug thickness, t = 2.5"

Shear out length, L = 2.75 - .9375 = 1.813"

No. of surfaces, N = 2

Shear area, A_{ES} = N.L.t + 2 x 1.813 x 2.5 = 9.063 in^2

Shear stress, $\tau = V/A_{ES}$ = 410,125.38/9.063

τ = 45,252.71

$$S.F. = \frac{.577\ (100{,}000)}{45{,}252.71} = 1.28$$

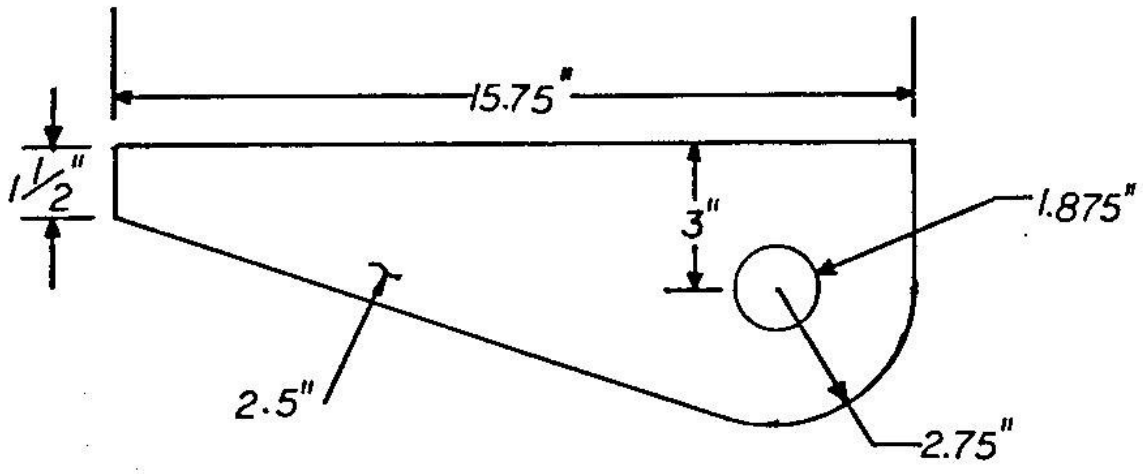

FIGURE – 2-4
TIE-DOWN LUG DETAIL

Tension Stress

Force, F = 410,125.38 lbs.

Horizontal component, $F_H = F\,(B_x^2 + B_z^2)^{1/2} \sin 12.27°$

$F_H = 410{,}125.38\,[(.4401)^2 + (.5014)^2]^{1/2} \sin 12.27°$

$F_H = 58{,}148.41$ lbs.

Vertical component, $F_V = (F^2 - F_H^2)^{1/2}$

$F_V = [(410{,}125.38)^2 - 58{,}148.41)^2]^{1/2} = 405{,}982.25$ lbs.

$$\sigma_{th} = F_H/A = \frac{58{,}148.41}{2.5(5.75 - 1.875)} = 6002.42 \text{ psi.}$$

$$\sigma_{tv} = Fv/A = \frac{405{,}982.25}{15.75 \text{ x } 2.5} = 10{,}310.66 \text{ psi}$$

$\sigma_t = \sigma_{th} + \sigma_{tv} = 16{,}313.08$ psi

Bending Stress

The bending moment about the center of the lug base is:

$$M = 405{,}982.25(3) - 58148.41\left(\frac{15.75}{2} - 2.75\right)$$

M = 919,936.15 in-lbs

$$\text{Section modulus, } S = bh^2/6 = \frac{2.5(15.75)^2}{6}$$

$S = 103.36 \text{ in}^3$

$\sigma_b = 919{,}936.15/103.36 = 8900.31$ psi

Direct stress is $\sigma_t + \sigma_b = 25{,}213.39$ psi

Shear Stress

Use v = 410,125.38 lbs (conservative)

Shear area, A_{ES} = 15.75(2.5) = 39.38 in^2

$\tau = V/A_{ES}$ = 410,125.38/39.38 = 10,414.56 psi

Stress Intensity, S.I. = $2\sqrt{\tau^2 + (\sigma/2)^2}$

S.I. = $2\sqrt{(10{,}414.56)^2 + (25{,}213.39/2)^2}$

S.I. = 32,704.24 psi

S.F. = $\frac{100{,}000}{25{,}213.39}$ = 3.06

2.4.4.3 Stresses in the Welds

Length of weld, L_W = (15.75 x 2 + 2.5 x 2)

L_W = 36.5”

Width of weld, W_W = .707 x ¾ = .53”
Area of weld, A_W = 36.5 x .53 = 19.35 in^2

Conservatively assume the force acting on weld:

F = 410,125.38 lbs

$\tau_W = \frac{410{,}125.38}{19.35}$ = 21,195.11 psi

S.F. = $\frac{57{,}700}{21{,}195.11}$ = 2.72

2.5 Standards for Type B and Larger Quantity Packaging

This section is not applicable.

2.6 Normal Condition of Transport

The package has been designed, constructed and the contents limited such that the performance requirements specified in 10CFR 71.71 will be met when the package is subjected to the normal condition of transport specified in 10CFR 71.71. The ability of the package to satisfactorily withstand the normal condition of transport has been assessed as described in the following paragraphs.

2.6.1 Heat

10CFR 71.71 (c) (1) specifies an ambient temperature of 100°F in still air, and insolation requirements as normal condition of transport. The pressure, shown in Table 3.1-1, and the thermal gradients corresponding to this case are small. The stresses resulting from internal pressure are very low in comparison to the allowable stresses summarized in Table 2-40. Therefore, this normal heat condition will not affect cask performance.

2.6.2 Cold

The materials of construction for the packaging, including the lead, carbon steel, overpack and seals are not significantly affected by an ambient temperature of -40°F.

The cask must be able to resist brittle fracture failure under normal conditions of transport and hypothetical conditions at temperatures as low as -20°F per NRC Regulatory Guide 7.8. Fracture-critical parts of the cask include the 2-inch thick outer shell, the 3-inch and 2½-inch plates in the lids and bottom end plate, the 1 1/8-inch thick steel inner shell and welds jointing these components. Note that according to NUREG/CR-1875, the bolts are not fracture-critical because they are part of a redundant system.

These critical components are shown in Figure 2-9. For compliance with Category II, fracture toughness requirements of NUREG/CR-1875, the nil ductility transition temperature (TNDT) of this steel must be less than the value determined by the equation:

$T_{NDT} = L_{ST} - A$
Where L_{ST} = Lowest service temperature (= - 20°F)

A = Value from Figure 2-9A
(from NUREG/CR 1815)

Table 2-5A tabulates the T_{NDT} required for critical components.

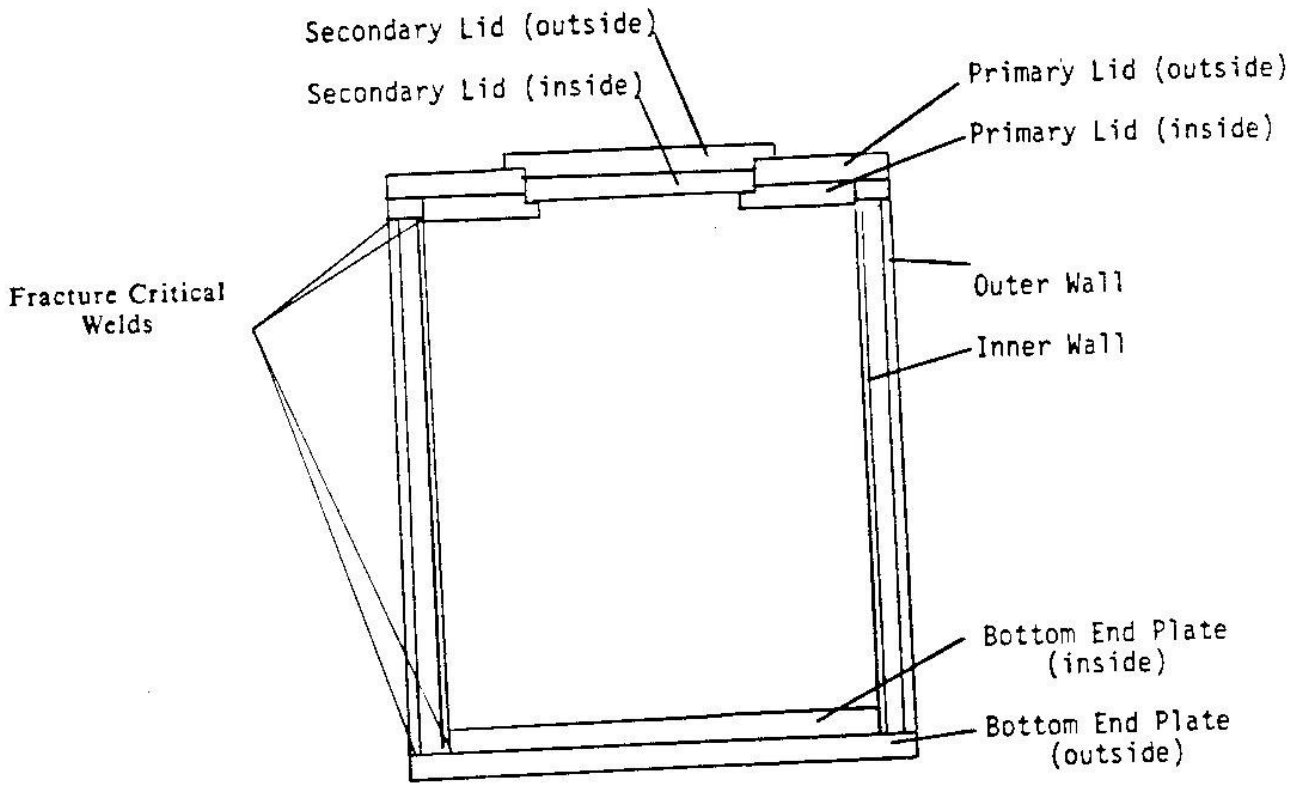

Figure 2-9

Fracture Critical Components

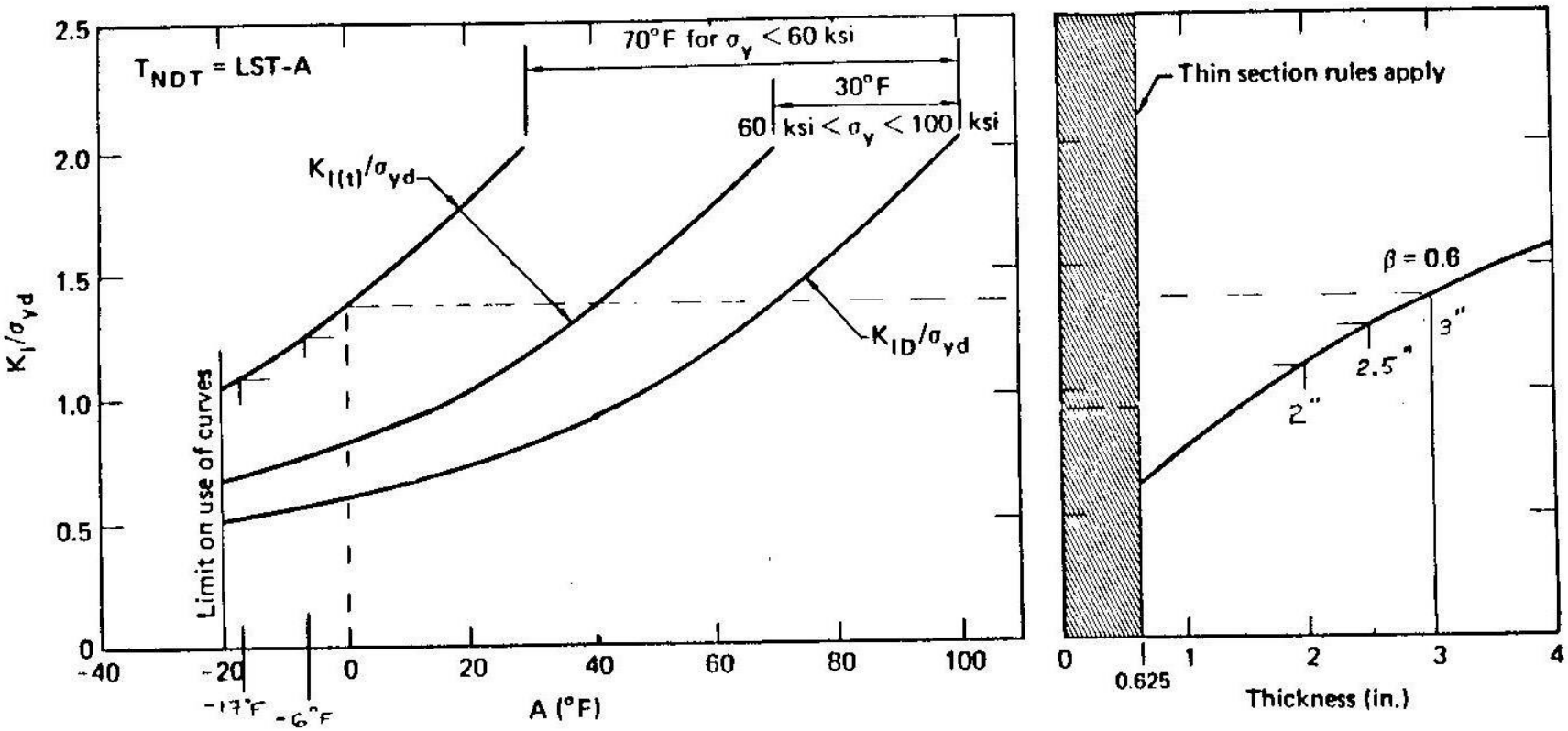

Figure 2-9A

Design Chart for Category 11 Fracture Critical mponentsCo

TABLE 2-5A

NIL DUCTILITY TEMPERATURE REQUIREMENTS FOR FRACTURE CRITICAL COMPONENTS OF THE 10-160B CASK

Component	Thickness (inches)	A[2]	TNDT req[3] (°F)
Bottom End Plate (outside)	2 1/2	-6	-14
Bottom End Plate (inside)	3	0	-20
Inner Wall	1 1/8	-20	0
Outer Wall	2	-17	-3
Primary Lid (inside)	3	0	-20
Primary Lid (outside)	2 1/2	-6	-14
Secondary Lid (inside)	3	0	-20
Secondary Lid (outside)	2 1/2	-6	-14
Welds Joining bottom end plates and the upper ring to the shells.	2	-17	-3

Notes:

1) Material number from drawing

2) Calculated according to Figure 2-9A

3) T_{NDT} determined according to ASTM Standard E208-81

2.6.3 **Pressure**

10CFR 71.71 (c)(3) and (4) require a reduced external and external pressure cases as to be evaluated as a normal condition of transport. The reduced external pressure of 3.5 psi absolute and the maximum internal pressure of 8.4 psig (see Section 3.4.4) under normal conditions results in a net pressure differential of, ΔP, = 8.4 + 14.7 – 3.5 = 19.6 psi.

Review of Tables A2-35 and A2-36, which provides cask stresses for internal pressure cases, shows that 19.6 psi would have no significant effect on the cask. The 20 psi external pressure will also have an insignificant effect on the cask (See Tables A2-39 and A2-40).

2.6.4 **Vibration**

The package is similar to many other proven casks with many years operational use in a transport environment. This experience demonstrates that vibration normally incident to transport will have an effect upon the package.

2.6.5 **Water Spray**

Not applicable, since the package exterior is constructed of steel.

2.6.6 **Free Drop**

The gross package weight of 72,000 pounds establishes the normal handling condition drop height to be one foot. The package must survive a one-foot free fall onto a flat, unyielding surface without reducing its effectiveness in withstanding subsequent accident conditions. Using techniques described in Appendix 2.10.1, the maximum accelerations experienced by the package for a one-foot drop have been calculated to be:

Condition	Acceleration (G's)
End	54.3
Side	29.0
Corner	9.4

A portion of the CASKDROP computer output for these cases are shown in Figures 2-10 and 2-12. The stresses resulting from these loads have been found as a percentage of those calculated for the 30-foot drop conditions based on the ratios of peak accelerations. These stresses are summarized in the following sections.

```
05-22-1985 13:12:27
C A S K   G E O M E T R Y
   End Drop Analysis
Cask:50ROWT   50R OVERWEIGHT                                G= 386.4  in/sec^2>>>>>>>>> Package          uses correction factor table:standard
Weight              (lb) W     72000
Outer diamter       (in) POD   78.5
Length              (in) LC    88
Drop height         (ft) H     1
CG (cask btm)       (in) LCG   56.257
Moment of Inertia        ICG   0                  (LB SEC^2 INCHES)
Ovp materials: Top:   Bottom: FR6725M
Upper     Lower  (All values in inches)
Inner diameter  (in) OID                47.5      47.5
Outer diameter  (in) OOD                102.001   102.001
Inner thickness (in) LI                 21.012    21.012
Outer thickness (in) LO                 44.01     44.01
05-22-1985 13:12:28
C A S K   D R O P   R E S U L T S
   End Drop Analysis
METHOD  2
Cask:50ROWT   50R OVERWEIGHT      Overpack:FR6725M  lower
   ============Iteration   Time    Deflection  Acc     Force     E(abs)
Projection            3     .008       0.4     -54.3   2517598.    909386.
Overpack              0     .000       0.0      0.0    1467462.        0.
Correction factors
 1 : 1    2 : 1    3 : 1    4 : 1    5 : 1    6 : 1    7 : 1    8 : 1    9 : 1    10 : 1    11 : 1    12 : 1    13 : 1    14 : 1    15 : 1
```

Figure 2-10

1-Foot End Drop CASKDROP

```
05-22-1985 13:19:58
C A S K   G E O M E T R Y
   Side Drop Analysis
Cask:50ROWT   50R OVERWEIGHT                                  G= 386.4  in/sec^2>>>>>>>>> Package          uses correction factor table:standard
Weight              (lb) W     72000
Outer diameter      (in) POD   78.5
Length              (in) LC    88
Drop height         (ft) H     1
CG (cask btm)       (in) LCG   44
Moment of Inertia        ICG   0                  (LB SEC^2 INCHES)
Ovp materials: Top: FR6725N   Bottom: FR6725N
Upper     Lower  (All values in inches)
Inner diameter  (in) OID                47.5      47.5
Outer diameter  (in) OOD                102.001   102.001
Inner thickness (in) LI                 21.012    21.012
Outer thickness (in) LO                 44.01     44.01
05-22-1985 13:19:59
C A S K   D R O P   R E S U L T S
   Side Drop Analysis
METHOD  2
Cask:50ROWT   50R OVERWEIGHT      Overpacks:FR6725N  & FR6725N

        Iteration     Time   Deflection   Acc     Force     E(abs)
 Top          9     0.0155     0.9822    -29.0    1081765.    470072.
 Bottom                        0.9822    -29.0    1081765.    470072.
 Combined                                -29.0    2163530.    940143.
Correction factors
 1 : 1    2 : 1    3 : 1    4 : 1    5 : 1    6 : 1    7 : 1    8 : 1    9 : 1    10 : 1    11 : 1    12 : 1    13 : 1    14 : 1    15 : 1
```

Figure 2-11

1-Foot Side Drop CASKDROP Print-out

```
05-22-1985 13:17:44
C A S K   G E O M E T R Y
 Corner Drop Analysis
Cask:50ROWT   50R OVERWEIGHT                                G= 386.4  in/sec^2>>>>>>>>> Package          uses correction factor table:standard
Weight              (lb) W     72000
Outer diamter       (in) POD   78.5
Length              (in) LC    88
Drop height         (ft) H     1
CG (cask btm)       (in) LCG   56.257
Moment of Inertia        ICG   0                  (LB SEC^2 INCHES)
Ovp materials: Top: FR6725    Bottom: fr6725h
Upper     Lower  (All values in inches)
Inner diameter  (in) OID                47.5      47.5
Outer diameter  (in) OOD                102.001   102.001
Inner thickness (in) LI                 21.012    21.012
Outer thickness (in) LO                 44.01     44.01
Press space bar to proceed05-22-1985 13:17:45
C A S K   D R O P   R E S U L T S
 Corner Drop Analysis
METHOD  2
Cask:50ROWT   50R OVERWEIGHT      Overpack:fr6725h
        ============
  ALPHA:  33.42634
              Iteration   Time     Deflection  Acc      Force     E(abs)
 BOTTOM DOWN          20     0.0700     4.7770     -9.4      747115.    1227023.
Correction factors
 1 : 1    2 : 1    3 : 1    4 : 1    5 : 1    6 : 1    7 : 1    8 : 1    9 : 1    10 : 1    11 : 1    12 : 1    13 : 1    14 : 1    15 : 1
```

Figure 2-12
1-Foot Corner Drop CASKDROP Print-out

2.6.6.1 End Drop

The ratio of stresses for the one foot drop compared to the thirty-foot drop is 54.3/175.6 = 0.3092. Maximum stress intensities are summarized in Table 2-6. Stress intensities throughout the package are well below allowables. The maximum stress intensity, 9,433 psi, occurs in the inner shell at the section shown in Figure A2-40. The results in a minimum factor of safety of:

$$S.F. = \frac{35,000}{9,433} = 3.71$$

2.6.6.2 Side Drop

The ratio of stresses for the one-foot drop compared to the thirty-foot drop is 29./120.6 = 0.2405. Maximum stress intensities are summarized in Table 2-7. Stress intensities throughout the cask remain well below allowables during the side drop. The highest stress intensity is 13,618 psi in the inner shell at the section shown in Figure A2-41. The minimum factor of safety is then:

$$S.F. = \frac{23,300}{13,618} = 1.71$$

2.6.6.3 Corner Drop

The ratio of stresses for the one foot compared to the thirty-foot drop is 9.4/71.13 = 0.1322. Maximum stress intensities are summarized in Table 2-8. Stress intensities are well below allowables throughout the cask. The highest stress intensity, 7,435 psi occurs in the inner shell at the section shown in Figure A2-43. The corresponding minimum safety factor is:

$$S.F. = \frac{23,300}{7,435} = 3.13$$

2.6.7 (Successive) Corner Drop

Not applicable since this is not a wooden package.

Table 2-6
Maximum Stress Intensities in Cask Components
Hypothetical Accident – 1-Ft End Drop[1]

Cask Component	Stress Classification	S.I.[2] (PSI)	Allowable (PSI)	Safety Factor
Baseplate	Membrane	269.82	23,300	86.4
	Membrane Plus Bending	5,142.04	35,000	6.81
Outer Shell	Membrane	4,142.86	23,300	5.62
	Membrane Plus Bending	9,427.74	35,000	3.71
Inner Shell	Membrane	6,431.72	23,300	3.62
	Membrane Plus Bending	9,433.3	35,000	3.71
Bolting Ring	Membrane	4,051.69	23,300	5.75
	Membrane Plus Bending	4,380.27	35,000	7.99
Primary Lid	Membrane	2,006.49	23,300	11.61
	Membrane Plus Bending	6,798.35	35,000	5.15
Secondary Lid	Membrane	81.56	23,300	286.0
	Membrane Plus Bending	7,764.57	35,000	4.51

[1] See Table 2-1 for accident condition load combination
[2] See Table A2-23 for the load combination per Regulatory Guide 7.8.

Table 2-7
Maximum Stress Intensities in Cask Components
Hypothetical Accident – 1-Ft Side Drop[1]

Cask Component	Stress Classification	S.I.[2] (PSI)	Allowable (PSI)	Safety Factor
Baseplate	Membrane	3,422	23,300	6.81
	Membrane Plus Bending	8,614.94	35,000	4.06
Outer Shell	Membrane	10,244.61	23,300	2.27
	Membrane Plus Bending	14,625.95	35,000	2.39
Inner Shell	Membrane	13,618.43	23,300	1.71
	Membrane Plus Bending	18,343.48	35,000	1.91
Bolting Ring	Membrane	12,311.74	23,300	1.89
	Membrane Plus Bending	13,408.91	35,000	2.61
Primary Lid	Membrane	3,480.92	23,300	6.69
	Membrane Plus Bending	9,166.15	35,000	3.82
Secondary Lid	Membrane	3,332.02	23,300	6.99
	Membrane Plus Bending	9,422.1	35,000	3.71

[1] See Table 2-1 for accident condition load combination
[2] See Table A2-25 for the load combination per Regulatory Guide 7.8.

Table 2-8
Maximum Stress Intensities in Cask Components
Hypothetical Accident – 1-Ft Corner Drop[1]

Cask Component	Stress Classification	S.I.[2] (PSI)	Allowable (PSI)	Safety Factor
Baseplate	Membrane	1,489.03	23,300	15.65
	Membrane Plus Bending	3,306.04	35,000	10.59
Outer Shell	Membrane	4,191.65	23,300	5.65
	Membrane Plus Bending	7,561.5	35,000	4.63
Inner Shell	Membrane	7,434.98	23,300	3.13
	Membrane Plus Bending	8,952.06	35,000	3.91
Bolting Ring	Membrane	4,278.36	23,300	5.45
	Membrane Plus Bending	5,507.76	35,000	6.35
Primary Lid	Membrane	3,422.5	23,300	6.81
	Membrane Plus Bending	5,025.03	35,000	6.97
Secondary Lid	Membrane	1,472.72	23,300	15.82
	Membrane Plus Bending	3,165.2	35,000	11.06

[1] See Table 2-1 for accident condition load combination
[2] See Table A2-27 for the load combination per Regulatory Guide 7.8.

2.6.8 Penetration

Impact energies resulting from a 13-pound rod dropping from a height of 40 inches will have no significant effect on the package. The impact limiter fully protects both ends of the cask leaving only the central body exposed. The cask body is manufactured from 2-inch thick steel plate and backed with 1 7/8 inches of lead. The ends are 5 ½ inches of thick steel. No valves, valve covers or fragile protrusions exist.

2.7 Hypothetical Accident Conditions

The package has been designed and the contents limited such that the performance requirements specified in 10 CFR 71.51 will be met if the package is subjected to the hypothetical accident conditions specified in Section 71.73 of 10 CFR 71.

To demonstrate the structural integrity of the cask and its ability to withstand accident conditions, a set of comprehensive loading, stress and deflection analyses have been made addressing each of the specified accident conditions. For the thirty-foot drop analyses, loads were derived by computing energy absorption of the foam impact limiters and the distribution of stresses over the outer cask surface due to the impact limiters. For the fire accident conditions, temperatures through the cask walls were computed using a one-dimensional ANSYS thermal finite element model. Transient analysis over a period of 90 minutes was performed to evaluate the temperature gradient and average temperature of the cask walls (see section 3.5 for details of the analysis). A conservative estimate of temperature distribution in the entire cask was established based upon the results of this analysis. These temperatures were used in hand calculations in order to find stresses in the cask. Descriptions of these calculations are contained in Appendix 2.10.1.

2.7.1 Free Drop

Section 71.73 of 10 CFR 71 requires that the package survive a thirty-foot drop onto a flat unyielding surface. Analytical methods were used to demonstrate the capability to withstand the effects of this accident. These analytical techniques are described in Appendix Section 2.10.1.

As described in Section 1.2, the package features cylindrical energy absorbing impact limiters surrounding each end of the cask body. These impact limiters are designed to minimize damage to the cask body from thirty-foot drops at any orientation onto an unyielding surface. The analyses described in this section demonstrate that these impact limiters function as designed; the cask body experiences no damage and incurs no stresses in excess of allowable levels. This behavior, under thirty-foot drop conditions, assures the complete effectiveness of the cask closure features essential for preservation of packager containment integrity.

Using the methods described in Appendix 2.10.1.1, three drop conditions for the package have been evaluated, i.e. end, side and corner. Analytical values of stress and deflection are combined with appropriate values due to temperature and pressure. These combined results are then compared with applicable criteria to demonstrate compliance of the package with the requirements for the hypothetical accident conditions.

2.7.1.1 Free Drop Impact – End Drop

The end drop produces the largest deceleration forces in the package of all the potential drop orientations. This produces the worst case loading for lead slump or deformation (see Sections 5.4.3).

For a thirty-foot end impact drop, deformation of the impact limiters amounted to 5.7 inches. This prediction employed the end drop analysis described in Appendix 2.10.1.1 and the energy absorbing foam properties of Figure 2-1. In order to predict maximum deflection, the curve of stress vs. strain for the lower bound was used and only the regions of the impact limiter that are directly backed by the cask are considered effective. Results of the analysis are shown in Table 2-9. A second analysis, using the upper bound of foam stiffness, and all regions of the impact limiter was used to predict the maximum bounding deceleration experienced by the cask upon impact. This maximum deceleration was found to be 176 G's. The results of this analysis are shown in Table 2-10.

Detailed cask stress calculations were made using the cask finite element model discussed in Section 2.10.1. The constraints and loads placed on the cask for the end drop analysis are shown in Appendix 2.10.2 with the resulting reaction forces to show moment and force equilibrium. The stresses associated with an end impact deceleration of 175.6 G's were combined with maximum normal temperature and pressure stresses as outlined in NRC Regulatory Guide 7.8. Maximum stress intensities are summarized in Table 2-11.

```
FILE: END17C   OUT  4-17-85   8:47a                    PRINTS VERSION: 12-28-84   9:14a                    PAGE NO.    1
-----------------------------------------------------------------------------------------------------------------------

04-17-1985 08:46:57
C A S K   G E O M E T R Y
  End Drop Analysis
Cask:50ROWT   50r cask over wt                          G= 386.4  in/sec^2)))))))))) Package          uses correction factor tabl
Weight            (lb) W     72000
Outer diameter    (in) POD   78
Length            (in) LC    88
Drop height       (ft) H     30
CG (cask btm)     (in) LCG   100
Moment of Inertia      ICG   0                 (LB SEC^2 INCHES)
Ovp materials: Top:   Bottom: fr6725s
Upper     Lower  (All values in inches)
Inner diameter  (in) OID              47.5      47.5
Outer diameter  (in) OOD              102.001   102.001
Inner thickness (in) LI               21.012    21.012
Outer thickness (in) LO               44.01     44.01
04-17-1985 08:46:58
C A S K   D R O P   R E S U L T S
  End Drop Analysis
METHOD  1
Cask:50ROWT   50r cask over wt    Overpack:fr6725s  lower
  ==========Iteration   Time     Deflection  Acc     Force     E(abs)
Projection          28     .020        5.7    -78.3   5711553.   26343602.
Overpack             0     .000        0.0     0.0        0.          0.
Correction factors
 1 : 0    2 : 0    3 : 1    4 : 1    5 : 0    6 : 1    7 : 0    8 : 0    9 : 1    10 : 1    11 : 0    12 : 1    13 : 0
```

Table 2-9
Caskdrop Program Output for End Drop (Soft Foam)

```
FILE: EWD17B   OUT  4-17-85   8:45a                    PRINTS VERSION: 12-28-84   9:14a                    PAGE NO.   1
-----------------------------------------------------------------------------------------------------------------------

04-17-1985 08:45:43
C A S K   G E O M E T R Y
  End Drop Analysis
Cask:50ROWT   50r cask over wt                          G= 386.4  in/sec^2>>>>>>>>> Package          uses correction factor tabl
Weight            (lb) W     72000
Outer diameter    (in) POD   78
Length            (in) LC    88
Drop height       (ft) H     30
CG (cask btm)     (in) LCG   100
Moment of Inertia      ICG   0                 (LB SEC^2 INCHES)
Ovp materials: Top:   Bottom: fr6725h
Upper     Lower  (All values in inches)
Inner diameter  (in) OID              47.5      47.5
Outer diameter  (in) OOD              102.001   102.001
Inner thickness (in) LI               21.012    21.012
Outer thickness (in) LO               44.01     44.01
04-17-1985 08:45:44
C A S K   D R O P   R E S U L T S
  End Drop Analysis
METHOD  2
Cask:50ROWT   50r cask over wt    Overpack:fr6725h  lower
  ==========Iteration   Time    Deflection  Acc     Force     E(abs)
Projection          15    .010        3.0   2-175.7   6305201.   26146930.
Overpack             0    .000        0.0     0.0   6414935.         0.
Correction factors
 1 : 1    2 : 1    3 : 1    4 : 1    5 : 1    6 : 1    7 : 1    8 : 1    9 : 1    10 : 1    11 : 1    12 : 1    13 : 1
```

Table 2-10
Caskdrop Program Output for End Drop (Hard Foam)

TABLE- 2-11
MAXIMUM STRESS INTENSITIES IN CASK COMPONENTS
HYPOTHETICAL ACCIDENT – 30 FT END DROP(1)

CASK COMPONENT	STRESS CLASSIFICATION	S.I.(2) (PSI)	ALLOWABLE (PSI)	SAFETY FACTOR
BASEPLATE	MEMBRANE	651.89	49,000	75.17
	MEMBRANE PLUS BENDING	14,557.3	70,000	4.81
OUTER SHELL	MEMBRANE	6,955	49,000	7.05
	MEMBRANE PLUS BENDING	16,971	70,00	4.12
INNER SHELL	MEMBRANE	11,196	49,000	4.38
	MEMBRANE PLUS BENDING	17,992	70,000	3.89
BOLTING RING	MEMBRANE	10,288	49,000	4.76
	MEMBRANE PLUS BENDING	11,087	70,000	6.31
PRIMARY LID	MEMBRANE	5,674.5	49,000	8.64
	MEMBRANE PLUS BENDING	20,309.9	70,000	3.45
SECONDARY LID	MEMBRANE	224.76	49,000	218
	MEMBRANE PLUS BENDING	23,845.8	70,000	2.94

NOTE: (1) See Table 2-1 for accident condition load combination.
(2) See Table A2-13 for the load combination per Regulatory Guide 7.8.

Stress intensities throughout the cask are well below allowables, with the maximum stress intensity of 23,846 psi occurring in the secondary lid at the section shown in Figure A2-40. The corresponding minimum factor of safety is:

$$S.F. = \frac{70,000}{23,846} = 2.94$$

The stress intensity distribution in the solid elements in the critical region is shown in Figure 2-13.

2.7.1.1.1 End Drop Secondary Lid Bolt Forces

The loads required to hold the secondary lid in place for the end drop were calculated using the results of ANSYS stress analysis. The forces on the bolts were computed in the axial (tensile) and radial (shear) direction. Because of the axisymmetry for this load case, no tangential (shear) forces should exist. However, since the grid geometry is not axisymmetric, a slight difference in weight and the element centroid location around the circumference of the cask model exists. This gives rise to a nonaxisymmetric inertia loading on the cask. Therefore, the results tangential (shear) forces on the bolt locations. Also, because of the reasons mentioned, a slight variation in nodal forces at the bolt locations around the circumferential directions is predicted by ANSYS model. Table 2-12(a) lists the load and the intensities in the bolts (1 3/4" – 8UN) are also presented in the table. The highest stress intensity was found to be 57,310 psi, and the corresponding safety factor, is

$$S.F. = \frac{130,000}{57,310} = 2.27$$

2.7.1.1.2 End Drop Primary Lid Bolt Forces

No forces are developed in the primary lid bolts during this condition.

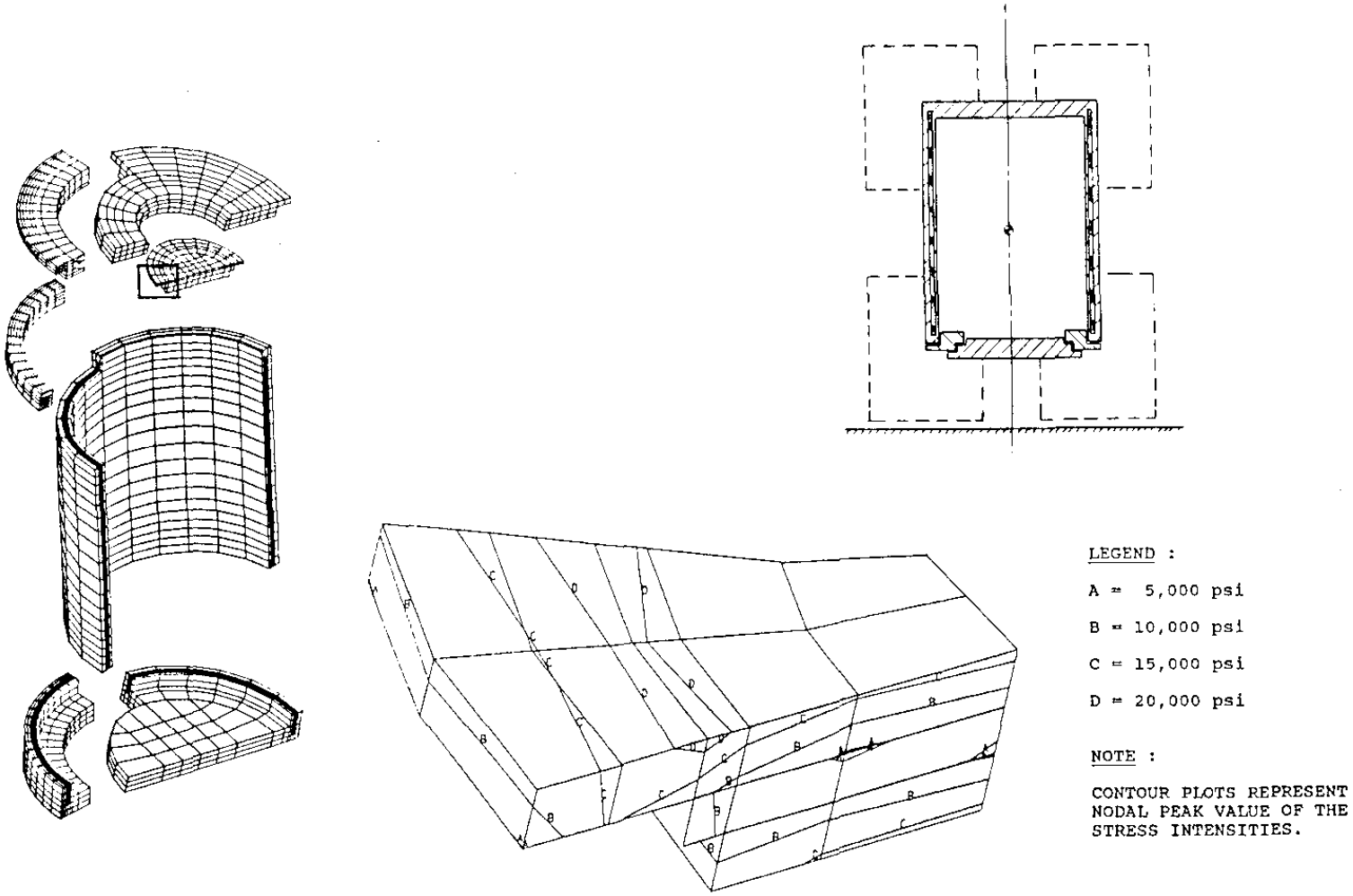

Figure 2-13

End-Drop – Stress Intensity Contour Plot
Secondary Lid

TABLE 2-12

10-160B CASK – END DROP ANALYSIS
SECONDARY-LID BOLT LOADING

LOCATION (DEGREES)	FEM NODE NO.	FX(1) (lbs)	FY(1) (lbs)	FZ(1) (lbs)	AXIAL LOAD (lbs)	SHEAR LOAD (lbs)	S.I.(3) (psi)
0	114	28,341	-(2)	80,475	80,475	28,341	47,341 (4)
30	116	38,903	7,132	88,003	88,003	39,551	56,910 (4)
60	118	39,580	7,235	87,884	87,884	40,236	57,310 (4)
90	120	32,619	2,639	82,017	82,017	32,726	50,467 (4)
120	122	37,554	1,537	84,975	84,975	37,585	54,565 (4)
150	124	38,604	424	86,208	86,208	38,606	55,661 (4)
180	126	38,477	-(2)	86,496	86,496	38,477	55,682 (4)

NOTES:
(1) FX is force on the node in radial, FY in tangential and FZ in axial directions.

(2) Tangential loads at the plane of symmetry do not go through the bolts.

(3) For 1 3/4" – 8UN bolts (stress area 2.0792 in^2).

(4) Because of non-uniform grid size in the model, a small amount of moment, in addition to axial loading, exists giving non-axisymmetric S.I. distribution. The largest value is conservatively assumed to exist uniformly. See section 2.10 for more detail.

2.7.1.1.3 Lead Slump

Lead slump is derived directly from the finite element model used to compute stresses and deflections in the cask for the end drop analysis. From that analysis, lead slump is predicted to be less than 0.02 inches. This agrees well with test results of other Type B packages using foam impact limiters in which no measurable lead slump was found. No bonding is assumed between the lead and the steel shells in evaluating lead slump. The analysis shown in Section 5.4.3 shows that a localized loss of lead, due to slump, is acceptable.

2.7.1.2 Free Drop Impact – Side Drop

Behavior of the impact limiters during the side drop conditions has been evaluated using the analysis described in Appendix 2.10.1.1. Using the lower bound foam stiffness, a deflection of 7.8 inches was computed. Using the upper bound foam stiffness, a peak acceleration of 120.6 G's was found. The results of the analyses are shown in Tables 2-13 and 2-14.

Detailed cask stress calculations were made using the cask finite element model discussed in Section 2.6.1. The constraints and loads placed on the cask for the side drop analysis are shown in Appendix 2.10.1.3 with the resulting reaction forces to show moment and force equilibrium. The stresses associated with a side impact deceleration of 120.6 G's were combined with maximum normal temperature and pressure stresses as outlined in NRC Regulatory Guide 7.8. Maximum stress intensities are summarized in Table 2-15. While high stresses occur mostly at the plane of the impact, some of the highest stresses are also found at other locations. Figures 2-14 to 2-16 show the contour plots of stress intensities in the critical regions of the cask.

TABLE 2-13
CASKDROP PROGRAM OUTPUT FOR SIDE DROP (SOFT FOAM)

```
01-31-1984 17:13:44
C A S K   G E O M E T R Y
  Side Drop Analysis
Cask:50ROWT   50R OVERWEIGHT                          G= 386.4  in/sec^2>>>>>>>>> Package          uses correction factor tabl
e:standard
Weight            (lb) W     72000
Outer diameter    (in) POD   78
Length            (in) LC    88
Drop height       (ft) H     30
CG (cask btm)     (in) LCG   44
Moment of Inertia      ICG   0                 (LB SEC^2 INCHES)
Ovp materials: Top: FR6725S   Bottom: FR6725S
Upper     Lower  (All values in inches)
Inner diameter  (in) DID              47.5      47.5
Outer diameter  (in) DOD              102.001   102.001
Inner thickness (in) L1               21.012    21.012
Outer thickness (in) LO               44.01     44.01
01-31-1984 17:13:44
C A S K   D R O P   R E S U L T S
  Side Drop Analysis
METHOD  1
Cask:50ROWT   50R OVERWEIGHT     Overpacks:FR6725S  & FR6725S

       Iteration     Time   Deflection   Acc     Force     E(abs)
 Top        66     0.0227     7.8270   -110.7    4022594.   13245131.
 Bottom                       7.8270   -110.7    4022594.   13245131.
 Combined                              -110.7    8045188.   26490262.
Correction Factors
 1 : 0    2 : 0    3 : 1    4 : 1    5 : 0    6 : 1    7 : 0    8 : 0    9 : 1    10 : 1    11 : 0    12 : 1    13 : 0
  14 : 1    15 : 0
```

TABLE 2-14
CASKDROP PROGRAM OUTPUT FOR SIDE DROP (HARD FOAM)

```
02-01-1985 15:23:38
C A S K   G E O M E T R Y
  Side Drop Analysis
Cask:50ROWT   50R OVERWEIGHT                          G= 386.4  in/sec^2)))))))))) Package          uses correction factor tabl
e:standard
Weight            (lb) W     77000
Outer diameter    (in) POD   78
Length            (in) LC    88
Drop height       (ft) H     30
CG (cask btm)     (in) LCG   44
Moment of Inertia      ICG   0                 (LB SEC^2 INCHES)
Ovp materials: Top: FR6725H   Bottom: FR6725H
Upper     Lower  (All values in inches)
Inner diameter  (in) OID              47.5      47.5
Outer diameter  (in) OOD              102.001   102.001
Inner thickness (in) L1               21.012    21.012
Outer thickness (in) LO               44.01     44.01
02-01-1985 15:23:39
C A S K   D R O P   R E S U L T S
  Side Drop Analysis
METHOD  2
Cask:50ROWT   50R OVERWEIGHT     Overpacks:FR6725H  & FR6725H

       Iteration    Time   Deflection   Acc     Force     E(abs)
 Top        45    0.0166     5.3959   -120.6    4379012.   13154409.
 Bottom                      5.3959   -120.6    4379012.   13154409.
 Combined                             -120.6    8758024.   26308818.
Correction factors
 1 : 1    2 : 1    3 : 1    4 : 1    5 : 1    6 : 1    7 : 1    8 : 1    9 : 1    10 : 1    11 : 1    12 : 1    13 : 1
  14 : 1    15 : 1
```

TABLE- 2-15
MAXIMUM STRESS INTENSITIES IN CASK COMPONENTS
HYPOTHETICAL ACCIDENT – 30 FT SIDE DROP(1)

CASK COMPONENT	STRESS CLASSIFICATION	S.I.(2) (PSI)	ALLOWABLE (PSI)	SAFETY FACTOR
BASEPLATE	MEMBRANE	13,918.79	49,000	3.52
	MEMBRANE PLUS BENDING	32,897.3	70,000	2.13
OUTER SHELL	MEMBRANE	33,494	49,000	1.46
	MEMBRANE PLUS BENDING	41,711	70,00	1.68
INNER SHELL	MEMBRANE	43,055	49,000	1.14
	MEMBRANE PLUS BENDING	58,589	70,000	1.19
BOLTING RING	MEMBRANE	47,220	49,000	1.04
	MEMBRANE PLUS BENDING	51,410	70,000	1.36
PRIMARY LID	MEMBRANE	13,324.5	49,000	3.68
	MEMBRANE PLUS BENDING	35,749.9	70,000	1.96
SECONDARY LID	MEMBRANE	13,801.46	49,000	3.55
	MEMBRANE PLUS BENDING	37,395.8	70,000	1.87

NOTE: (1) See Table 2-1 for accident condition load combination.
(2) See Table A2-17 for the load combination per Regulatory Guide 7.8.

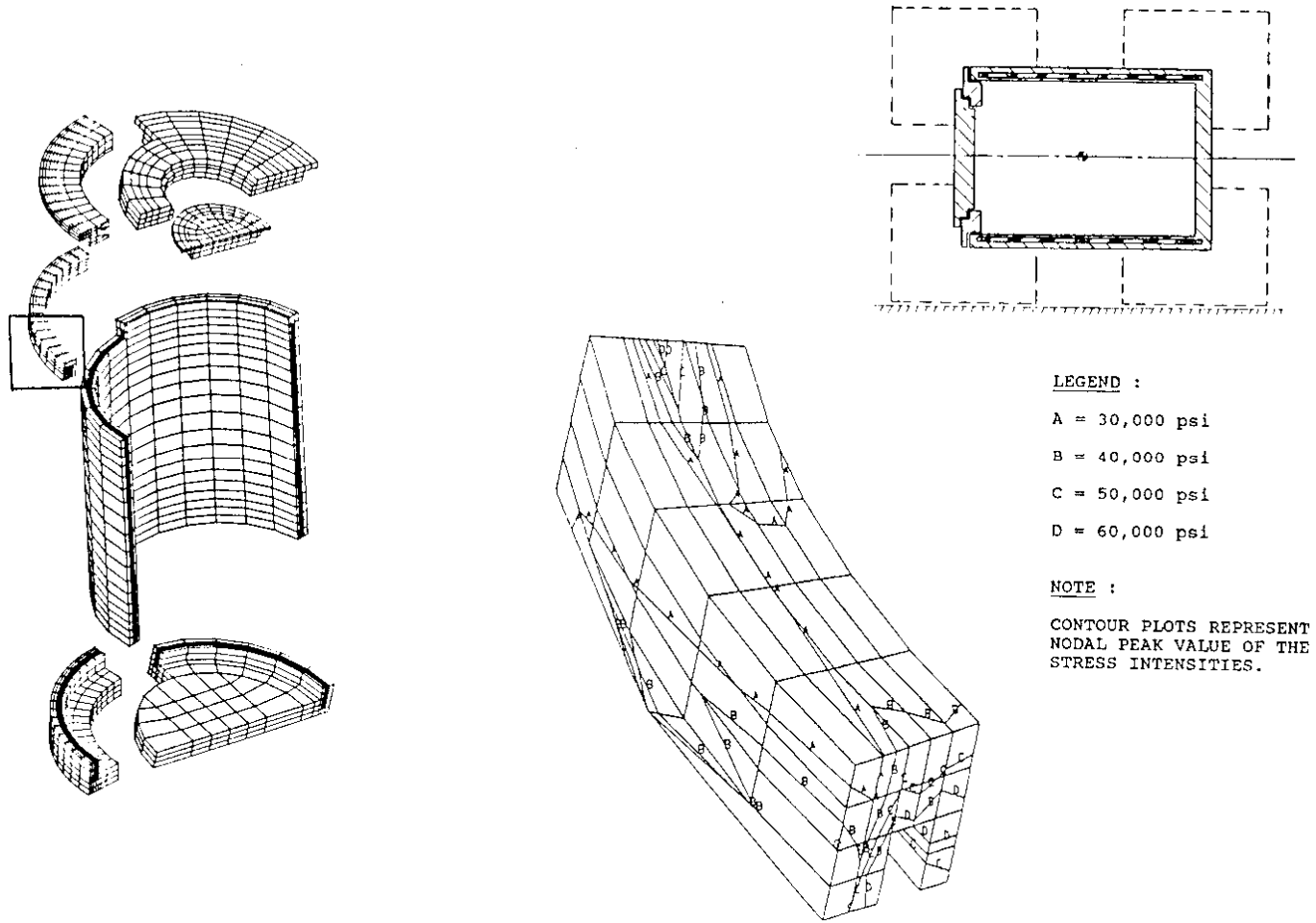

Figure 2 – 14

Side Drop – Stress Intensity Contour Plot
Bolt Ring

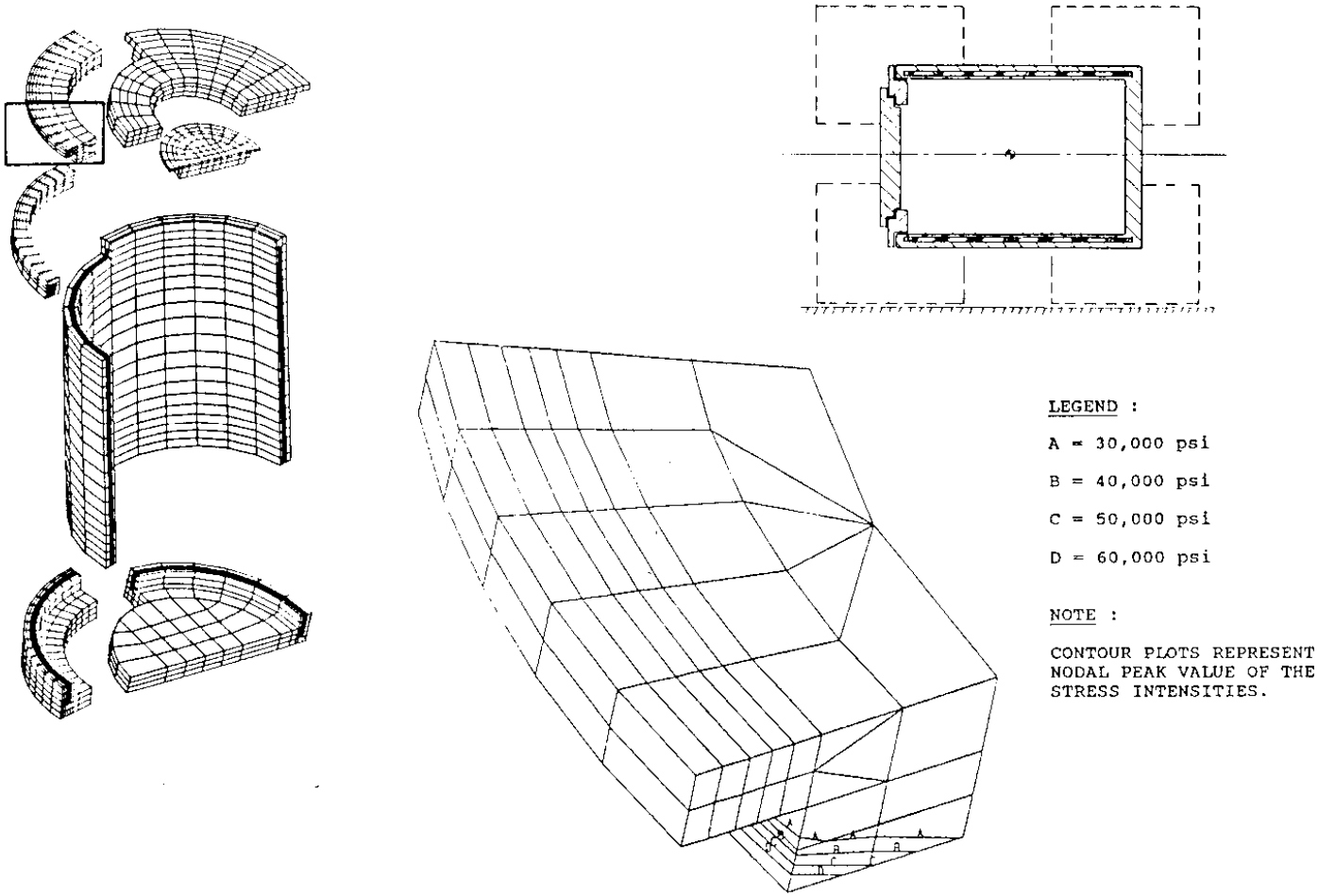

Figure 2 – 15

Side Drop – Stress Intensity Contour Plot
Primary Lid

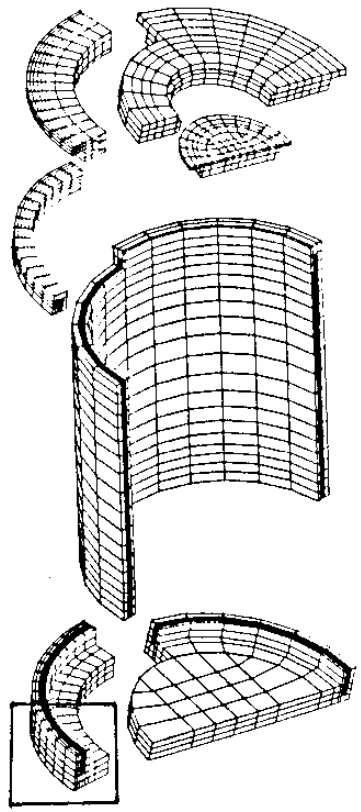

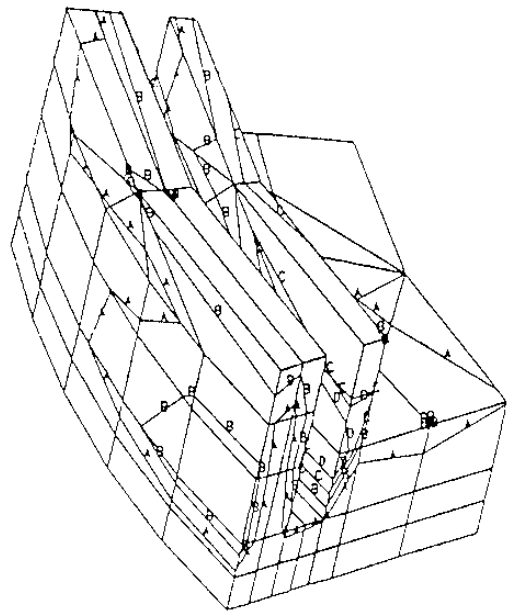

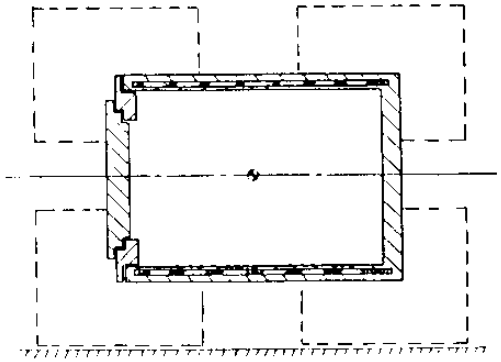

LEGEND :

A = 30,000 psi

B = 40,000 psi

C = 50,000 psi

D = 60,000 psi

NOTE :

CONTOUR PLOTS REPRESENT NODAL PEAK VALUE OF THE STRESS INTENSITIES.

Figure 2-16

Side Drop – Stress Intensity Contour Plot
Lower Shell

Stress intensities throughout the cask during the thirty-foot side drop are below allowables with the maximum stress intensity of 47,230 psi occurring in the bolting ring at the section. The corresponding minimum factor of safety is:

$$S.F. = \frac{49,000}{47,230} = 1.04$$

Side Drop Secondary Lid Bolt Forces

The loads required to hold the secondary lid in place were computed using the calculated ANSYS loads in the axial (tensile), radial (shear), and tangential (shear) directions. The lids and bolts are designed so that radial "compressive" forces are reacted by bearing between the secondary lid and the primary lid. Because of this, only radial "tensile" forces are used in computing bolt stresses. Radial "compressive" forces are those that tend to drive the bolted parts together in the radial direction, while radial "tensile" forces are those which tend to separate the parts in the radial direction. The resulting stress intensities, (for 1¾" bolts) as a function of angular position of the bolts, are shown in Table 2-16(a) for the secondary lid bolts. The angular position is measured around the circumference of the cask with zero degree corresponding to the vertical downward direction. The highest stress intensity was found to be 120,494 psi, and the corresponding safety factor is:

$$S.F. = \frac{130,000}{120,494} = 1.08$$

Side Drop Primary Lid Bolt Forces

The loads required to hold the primary lid in place are obtained using the results of ANSYS model. The resulting stress intensities (for 1¾" 8UN bolts) as a function of angular position of the bolts, are shown in Table 2-16(b) for the primary lid bolts. The angular position is measured around the circumference of the cask with zero degree corresponding to the vertical downward direction. The highest stress intensity was found to be 121,796 psi, and corresponding safety is:

$$S.F. = \frac{130,000}{121,796} = 1.07$$

Table 2-16(a)

10-160B Cask – Side Drop Analysis
Secondary-Lid Bolt Loading

Location[5] (Degrees)	FEM Node No.	FX[1] (lbs.)	FY[1] (lbs.)	FZ[1] (lbs.)	Axial (lbs.)	Shear (lbs.)	S.I.[4] (psi)
0	114	172,712[2]	-[3]	5,675	-[2]	-[2]	0
30	116	51,792[2]	-121,519	-281	281	121,519	116,889
60	118	-100,457	-74,818	-2,910	2,910	125,257	120,494
90	120	-122,577	1,784	-1,909	1,909	122,590	117,924
120	122	-52,788	66,538	-606	606	84,935	81,700
150	124	28,722[2]	59,002	1,563	-[2]	59,002	56,754
180	126	62,413[2]	-[3]	2,611	-[2]	0	0

NOTES:

(1) FX is force on the node in radial, FY in tangential and FZ in axial directions.

(2) The 'compressive' loads in radial and axial directions do not go through the bolts. See section 2.6.6.2 for more explanation.

(3) Tangential loads at the plane of symmetry do not go through the bolts.

(4) For 1¾" – 8UN bolts (stress area 2.0792 in^2).

(5) 0° corresponds to the point of impact.

Table 2-16(b)

10-160B Cask – Side Drop Analysis
Primary-Lid Bolt Loading

Location[5] (Degrees)	FEM Node No.	FX[1] (lbs.)	FY[1] (lbs)	FZ[1] (lbs)	Axial (lbs.)	Shear (lbs)	S.I.[4] (psi)
0	433	-10,813	-[3]	35,499	-[2]	10,813	10,401
30	438	-21,851	-83,065	9,754	-[2]	85,891	82,619
60	443	-118,307	-45,071	-4,193	4,193	126,602	121,796
90	464	-25,966	60,660	1,579	-[2]	65,984	63,470
120	222	29,010	110,172	-9,788	9,788	113,927	109,688
150	224	36,227	59,072	1,343	-[2]	69,296	66,656
180	226	18,860	-[3]	6,495	-[2]	18,860	18,842

NOTES:

(1) FX is force on the node in radial, FY in tangential and FZ in axial directions.

(2) The 'compressive' loads in radial and axial directions do not go through the bolts. See section 2.6.6.2 for more explanation.

(3) Tangential loads at the plane of symmetry do not go through the bolts.

(4) For 1¾" – 8UN bolts (stress area 2.0792 in^2).

(5) 0° corresponds to the point of impact.

2.7.1.3 Free Drop Impact – Corner Drop

An energy balance analysis, described in Appendix 2.10.1, was used to predict loads on the cask during the corner drop. The angle of the cask with respect to the impact surface was chosen so that the center of pressure at full deformation was directly beneath the cask center of gravity. Because no drop energy is converted to rotational energy of the cask, this is the worst case.

For a thirty-foot corner impact drop, deformation of the impact limiter amounted to 17.0 inches. In order to predict maximum deflection, the curve of stress vs. strain for the lower bound of foam stiffness was used and only the regions of the impact limiter that are backed by the cask are considered effective. Results of the analysis are shown in Table 2.18. A second analysis, using the upper bound of material stiffness and all regions considered effective was used to predict the maximum deceleration experienced by the cask upon impact. This maximum deceleration was found to be 71.13 G's. The results of this analysis are shown in Table 2-19.

Detailed cask stress calculations were made using the cask finite element model discussed in Section 2.10.1. The constraints and loads placed on the cask for the corner drop analysis are shown in Appendix 2.10.3 with the resulting reaction forces to show moment and force equilibrium. The stresses associated with a corner impact deceleration of 71.13 G's were combined with maximum normal temperature and pressures stresses as outlined in NRC Regulatory Guide 7.8. Maximum stress intensities are summarized in Table 2-20. While high stresses occur mostly at the plane of impact, some of the highest stresses are also found at other locations. Table 2-20 also indicates the location of high stress intensities in the cask components. Figures 2-17 thru 2-18 show contour plots of stress intensities in the critical regions of the cask.

Stress intensities throughout the cask are well below allowables with the maximum stress intensity of 28,029 psi occurring in the inner shell at the section shown in Figure A2-43. The corresponding minimum factor of safety is:

$$S.F. = \frac{49{,}000}{28{,}029} = 1.75$$

```
05-22-1985 09:01:59
C A S K   G E O M E T R Y
 Corner Drop Analysis
Cask:50ROWT   50R OVERWEIGHT                                G= 386.4  in/sec^2>>>>>>>>> Package          uses correction factor table:standard
Weight              (lb) W     72000
Outer diameter      (in) POD   78.5
Length              (in) LC    88
Drop height         (ft) H     30
CG (cask btm)       (in) LCG   56.257
Moment of Inertia        ICG   0                    (LB SEC^2 INCHES)
Ovp materials: Top: FR6725    Bottom: FR6725S
Upper     Lower  (All values in inches)
Inner diameter  (in) OID                47.5      47.5
Outer diameter  (in) OOD                102.001   102.001
Inner thickness (in) LI                 21.012    21.012
Outer thickness (in) LO                 44.01     44.01
Press space bar to proceed05-22-1985 09:02:01
C A S K   D R O P   R E S U L T S
 Corner Drop Analysis
METHOD  1
Cask:50ROWT   50R OVERWEIGHT      Overpack:FR6725S
        ============
  ALPHA:  33.42634
              Iteration   Time     Deflection  Acc     Force     E(abs)
 BOTTOM DOWN        69     0.0460    16.5585    -61.1    4471391.   27130076.
Correction factors
 1 : 0    2 : 0    3 : 1    4 : 1    5 : 0    6 : 1    7 : 0    8 : 0    9 : 1    10 : 1    11 : 0    12 : 1    13 : 0    14 : 1    15 : 0
```

Table 2-18
Caskdrop Program Output for Corner Drop (Soft Foam)

```
05-21-1985 17:11:07
C A S K   G E O M E T R Y
 Corner Drop Analysis
Cask:50ROWT   50R OVERWEIGHT                                G= 386.4  in/sec^2>>>>>>>>> Package          uses correction factor table:standard
Weight              (lb) W     72000
Outer diameter      (in) POD   78.5
Length              (in) LC    88
Drop height         (ft) H     30
CG (cask btm)       (in) LCG   56.257
Moment of Inertia        ICG   0                  (LB SEC^2 INCHES)
Ovp materials: Top: FR6725    Bottom: fr6725h
Upper     Lower  (All values in inches)
Inner diameter  (in) OID                47.5      47.5
Outer diameter  (in) OOD                102.001   102.001
Inner thickness (in) L1                 21.012    21.012
Outer thickness (in) LO                 44.01     44.01
Press space bar to proceed05-21-1985 17:11:08
C A S K   D R O P   R E S U L T S
 Corner Drop Analysis
METHOD  2
Cask:50ROWT   50R OVERWEIGHT      Overpack:fr6725h
        ***********
  ALPHA:  33.42634
            Iteration   Time     Deflection  Acc     Force     E(abs)
 BOTTOM DOWN        62     0.0407    14.8797    -71.2     5197715.   27009068.
Correction factors
 1 : 1    2 : 1    3 : 1    4 : 1    5 : 1    6 : 1    7 : 1    8 : 1    9 : 1    10 : 1    11 : 1    12 : 1    13 : 1    14 : 1    15 : 1
```

Table 2-19
Caskdrop Program Output for Corner Drop (Hard Foam)

Table 2-20
Maximum Stress Intensities in Cask Components
Hypothetical Accident – 30-Ft Corner Drop[1]

Cask Component	Stress Classification	S.I. [2] (PSI)	Allowable (PSI)	Safety Factor
Baseplate	Membrane	10,618.79	49,000	4.61
	Membrane Plus Bending	18,927.3	70,000	3.70
Outer Shell	Membrane	12,779	49,000	3.83
	Membrane Plus Bending	17,481	70,000	4.0
Inner Shell	Membrane	28,029	49,000	1.75
	Membrane Plus Bending	30,952	70,000	2.26
Bolting Ring	Membrane	24,100	49,000	2.03
	Membrane Plus Bending	32,628	70,000	2.15
Primary Lid	Membrane	23,504.5	49,000	2.08
	Membrane Plus Bending	33,099.9	70,000	2.11
Secondary Lid	Membrane	11,029.46	49,000	4.44
	Membrane Plus Bending	20,235.8	70,000	3.46

[1] See Table 2-1 for accident condition load combination
[2] See Table A2-21 for the load combination per Regulatory Guide 7.8.

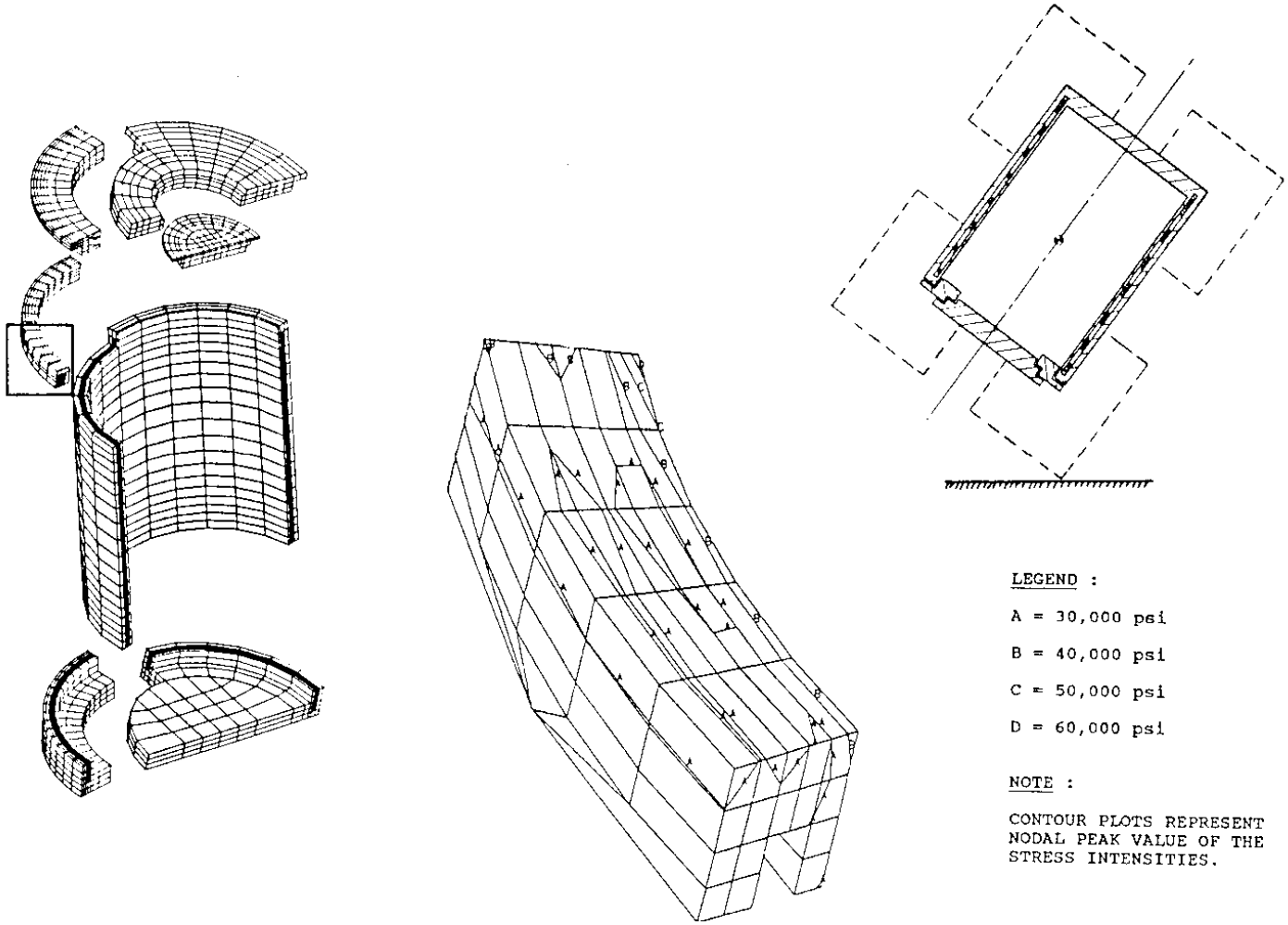

Figure 2-17

Corner Drop – Stress Intensity Contour Plot
Bolt Ring

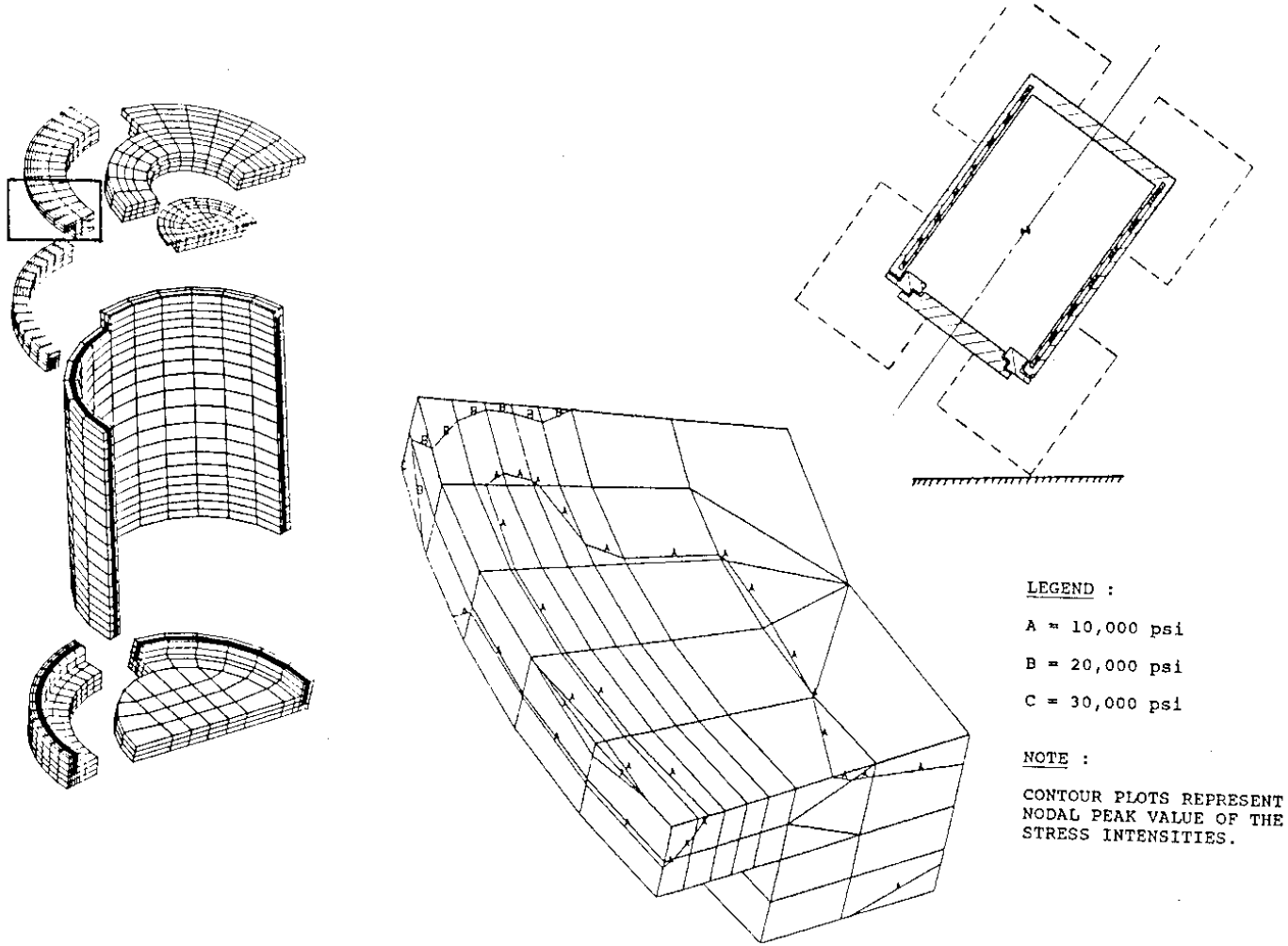

Figure 2-18

Corner Drop – Stress Intensity Contour Plot
Primary Lid

Corner Drop Secondary Lid Bolt Forces

The load required to hold the secondary lid in place was computed using the ANSYS stress analysis model. The forces on the bolts were computed in the axial (tensile), radial (shear), and tangential (shear) directions. The lids and bolts are designed so that radial "compressive" forces are reacted by bearing between the primary lid and the cask body and between the secondary lid and the primary lid. Because of this, only radial "tensile" forces are used in computing bolt stresses. Radial "compressive" forces are those that tend to drive the bolted parts together in the radial directions, while radial "tensile" forces are those which tend to separate the parts in the radial direction. The resulting stress intensities (for 1 ¾" Bolts), as a function of angular position of the bolts, are shown in Table 2-21(a) for the secondary bolts. The angular position is measured around the circumference of the cask with zero degree corresponding to the vertical downward direction. The highest stress intensity was found to be 113,204 psi, and the corresponding safety factor, based on yield is:

$$\text{S.F.} = \frac{130{,}000}{113{,}204} = 1.15$$

Corner Drop Primary Lid Bolt Forces

The loads required to hold the primary lid in place under the corner drop conditions were obtained from the results of ANSYS finite element model. The forces on the bolts were computed in the axial (tensile), radial (shear) and tangential (shear) directions. The resulting stress intensities (for 1 ¾" 8UN bolts), as a function of angular position of the bolts are shown in Table 2-21(b) for the primary lid bolts. The angular position is measured around the circumference of the cask with zero degree corresponding to the vertical downward direction. The highest stress intensity was found to be 81,461 psi and the corresponding safety factor, based on yield, is:

$$\text{S.F.} = \frac{130{,}000}{81{,}461} = 1.60$$

2.7.1.4 Oblique Drop

An analysis of similar dimensioned packages (Ref. 10) indicates that for a package with the diameter approximately equal to its length, there is no slapdown effect. That is, the impact is not more severe than a side drop.

Table 2-21(a)

10-160B Cask – Corner Drop Analysis
Secondary-Lid Bolt Loading

Location[5] (Degrees)	FEM Node No	FX[1] (lbs.)	FY[1] (lbs)	FZ[1] (lbs)	Axial (lbs.)	Shear (lbs)	S.I.[4] (psi)
0	114	92,079[2]	-[3]	-28,086	28,086	-[2]	13,508
30	116	33,055[2]	-12,767	-34,910	34,910	35,435	37,996
60	118	-56,361	29,781	-31,004	31,004	63,745	63,103
90	120	-98,594	63,468	-20,136	20,136	117,256	113,204
120	122	-99,751	68,728	-24,959	24,959	121,135	117,137
150	124	-79,318	44,284	-33,064	33,064	91,107	89,067
180	126	67,905[2]	-[3]	-36,539	36,539	67,905	67,641

NOTES:

(1) FX is force on the node in radial, FY in tangential and FZ in axial directions.

(2) The 'compressive' loads in radial and axial directions do not go through the bolts. See section 2.6.6.2.

(2) Tangential loads at the plane of symmetry do not go through the bolts.

(3) For 1 ¾" – 8UN bolts (stress area 2.0792 in^2).

Table 2-21(b)

10-160B Cask – Corner Drop Analysis
Primary-Lid Bolt Loading

Location[5] (Degrees)	FEM Node No.	FX[1] (lbs.)	FY[1] (lbs.)	FZ[1] (lbs.)	Axial (lbs.)	Shear (lbs.)	S.I.[4] (psi)
0	433	-6,241	-[3]	29,430	-[2]	6,241	6,003
30	438	-11,909	15,505	53,840	-[2]	19,551	18,798
60	443	-32,424	78,213	51,263	-[2]	84,687	81,461
90	464	-16,427	63,464	6,410	-[2]	65,556	63,059
120	222	9,953	79,753	-50,820	50,820	80,372	81,082
150	224	18,205	43,416	-56,574	56,574	47,078	52,830
180	226	3,645	-[3]	-56,569	56,569	3,645	27,432

NOTES:

(1) FX is force on the node in radial, FY in tangential and FZ in axial directions.

(2) The 'compressive' loads in radial and axial directions do not go through the bolts. See section 2.6.6.2.

(3) Tangential loads at the plane of symmetry do not go through the bolts.

(4) For 1¾" – 8UN bolts (stress area 2.0792 in^2).

2.7.1.5 Impact Limiter Attachment Forces

The purpose of this section is to demonstrate that during an oblique 30-foot drop, the impact limiter will remain attached to the cask body.

For most oblique angle orientations and crush depths, the impact limiter reaction is transmitted to the cask body in direct compression. Therefore, the forces transmitted to the impact limiter ratchet binders are near zero. This is not true for near vertical (90°) and near horizontal (0°) orientations of the package, at modest crush deformations and crush forces. In these very limited situations, the center of pressure of the crush force lies beyond the outer extremities of the cask body and loads the impact limiter ratchet binders. These ratchet binders loads exist only for modest crush deformations and crush forces. At maximum crush depth and maximum crush force, for all angles of orientations, there are no loads acting on the ratchet binders because the impact limiter interface forces are all direct compression.

There are 3 cases to consider for the oblique drop. The first case covers a range of angles between 0° (side drop) and 13° with respect to the horizontal. This range of angles is small enough to cause the cask to fall on its side without bouncing. The ratchet binders will not be affected in this case sine the acting load is minimal for this drop condition. The second case will be discussed and illustrated after case 3. The third case covers a range of angles between 61° and 90° (end drop). The 10-160B has a length to diameter (aspect) ratio equal to 1.13. This shape will have the tendency to tip and lands the cask on its base (end). No bouncing will occur for this case, since the cask will tip on its end. The impact limiter will remain attached to the cask body. Case two covers the largest range of angles (from 13° to 61°). In this situation, the center of pressure of the crush force can lie within the outer extremities of the cask body. The corner drop (C.G. over struck corner) is in this case 2 range of angles and is to demonstrate how the forces and moments will reactor on the cask.

The free body diagram of the impact limiter under the corner drop loading conditions is show in the following sketch. Since the impact limiter is more flexible than the cask body, a separation between the cask body and the impact limiter as shown in the sketch can load the ratchet binder on the opposite side of the impact in tension. For a conservative estimate of this tensile load, it can be assumed that the parallax between the line of action of the impact limiter reaction force and the impact limiter inertia force will cause a moment which will be resisted by the ratchet binder load.

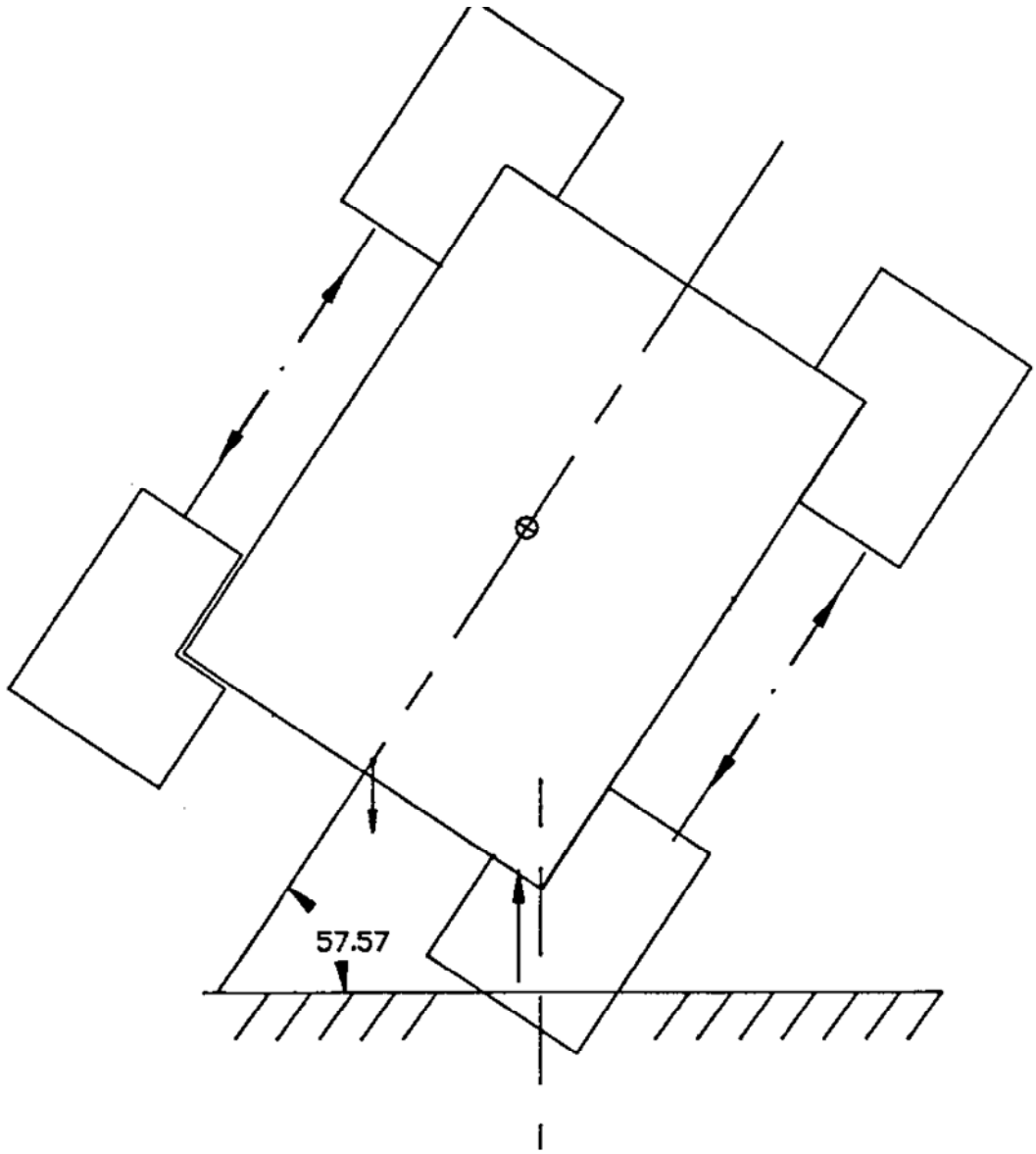

For a 30-foot corner-over-C.G. drop, a maximum deceleration of 71.13 g's is obtained (see Attachment 1).

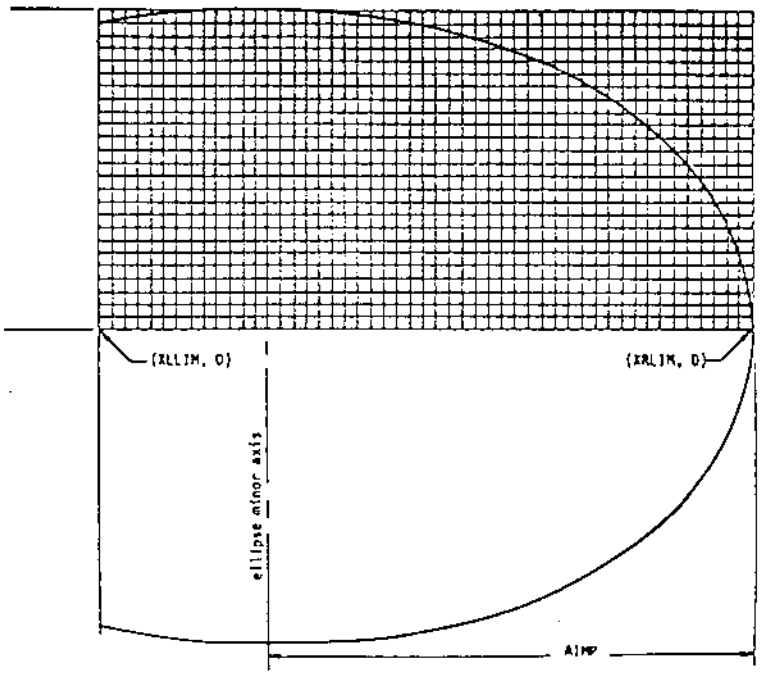

The foot print area of the impact limiter crush plane as shown below. The line of action of the reaction force is close to the centeroid of this foot print area, but for conservativeness, assume that the line of action passes through the lower corner of the cask. The C.G. of the impact limiter is 21.2576" above its base, but again for conservativeness assume that this distance is 21".

Impact limiter inertia force = 4,200 x 71.13
= 298,746 lbs.

Moment arm = 39.25 x Sin 56.57° (see sketch)
= 32.76 inch

Moment due to I/L inertia force about the I/L reaction point,

$$M = 298{,}746 \times 32.76 = 9.77 \times 10^6 \text{ in-lb.}$$

This moment will be resisted by the ratchet binder load and the cask shell-impact limiter interface load. Since the moment arising due to cask shell impact limiter load helps reduce the ratchet binder load, it has been neglected.

Referring to the sketch, the moment resisted by the impact limiter attachments (ratchet binders) is:

$$M = \sum_{i=1}^{8} P_i \times d_i$$

Where,
- M = Resisted Movement
- P_i = Axial load in i-th ratchet-binder
  = $P_{max} \times \sin(\theta_i/2)$
- θ_i = Angular location if i-th ratchet binder from pivot point
- d_I = Distance of the i-th ratchet binder from pivot point
  = $R \times (1-\cos\theta_i)$
- R = Ratchet binder circle radius = 42 inches

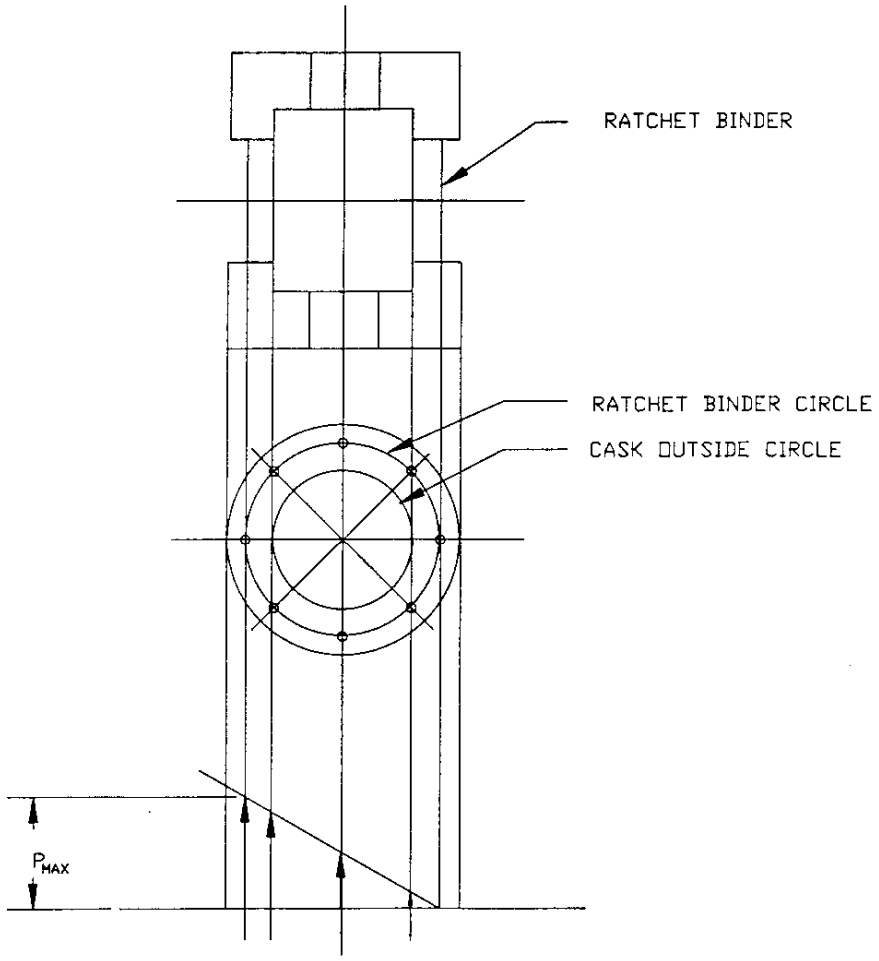

RATCHET BINDER LOAD

DISTRIBUTION

Thus,

$$M = 2 \times P_{max} \times R\,[\sin 22.5° \times (1-\cos 45°) + \sin 45° \times (1-\cos 90°) + \sin 67.5° \times (1-\cos 135°) + 0.5 \times \sin 90° \times (1-\cos 180°)] = 285.3P_{max}$$

Therefore,

$$P_{max} = 9.77 \times 10^6/285.3 = 34{,}245 \text{ lbs.}$$

The ratchet binders used in the 10-160B cask have 1" diameter shank (See Figure 1.1 and 1.2). The load carrying capacity of these ratchet binders is 45,000 lbs (per manufacturer's catalog). Thus, a factor of safety of 45,000/34,245 = 1.31 exists. The quick release pins attaching the ratchet binders to the impact limiter lugs have a 7/8" diameter (0.6013 in^2 cross-section area) and are made of 17.4 PH steel (S_y = 160,000 ksi). The average shear stress in the pin will be 34,245/(2 x 0.6013) = 28,476 psi giving a large factor of safety against the pin shear. The average shear in the attachment lug (made of SA 516 Gr 70 steel) will be 34,245/[2 x 0.5 x (2 – 15/32)] = 22,364 psi. The allowable shear stress is 0.42 S_u = 0.42 x 70,000 = 29,400 psi, giving a factor of safety of 29,400/22,364 = 1.31. It should be noted that these calculations have been performed with the most conservative assumptions and are applicable to the most stressed ratchet binder. The other ratchet binders experience a much smaller loading, and hence, have a larger factor of safety. It can, therefore, be concluded that under the corner drop loading conditions, the impact limiters will remain attached to the cask.

2.7.2 Puncture

10 CFR 71.73 c (2) requires package free fall 40 inches onto a 6" diameter mild steel bar without significant damage. The most critical regions are the sides of the cask and the ends of the cask.

2.7.2.1 Sides

Steel-lead casks dropped onto their sides were studied by Nelms (Structural Analysis of Shipping Casks, Vol. 3 Effects of Jacket Physical Properties and Curvature on Puncture Resistance, June 1968).

The equation developed empirically by Nelms is:

t_{req} = (W/S_u) 0.71

Where t = outer shell thickness required

W = weight of the cask (lbs)

S_u = tensile strength of the outer shell

For the 10-160B cask

t = 2"
W = 72,000 lbs
S_u = 70,000 psi

$$t_{req} = \left(\frac{72{,}000}{70{,}000}\right) .71 = 1.02 \text{ in}$$

The outer shell thickness of this cask is 2" which is sufficient to satisfy the Nelms express.

In addition to the empirical Nelms equation the stresses resulting from the drop are estimated as follows:

The maximum load a 6" diameter mild steel bar can exert on the package is

Fmax = Ak_s
K_s = plastic flow stress of mild steel (45000 psi assumed)
A = area of steel bar

$$Fmax = 45000 \frac{(6)^2}{4} = 1.26 \times 10^6 \text{ lbs}$$

The static G load is $\frac{1.26 \times 10^6}{72{,}000} = 17.67$ G's

The maximum bending moment in the cask, assuming the cask acts as a beam, is:

$$M = \frac{WL^2}{8}$$

$$W = \text{uniform load} = \frac{72{,}000\ (17.67)}{88} = 14{,}457 \text{ lb/in}$$

at 17.67 G's

$$M = \frac{14{,}457\ (88)^2}{8} = 13.99 \times 10^6 \text{ lb-in}$$

The section modulus of the outer shell of the cask is:

$Z = \pi(R_o{}^4 - R_I{}^4)/4\ (R_o)$
R_o = outer radius (in)
R_I = inner radius (in)

$$Z = \pi \frac{x(38.625^4 - 36.625^4)}{4x38.625} = 8{,}671 \text{ in}^3$$

$$S_{max} = \frac{13.99 \times 10^6}{8{,}671} = 1{,}613 < 48{,}000 \text{ psi}$$

2.7.2.2 Ends

The end plate and the lids of the cask have a total thickness of 5½ inches each, made-up of two plates: one of 3 inch thickness and the other of 2 ½ inch thickness. An analysis of these plates for a direct hit at the worst possible location is performed to show that the stresses in the plates are within the allowable values and the lids remain closed during the puncture accident. This is performed by idealizing the closure plates to circular plates of uniform thickness, loaded by a concentrated pressure over a circular area of 6-inch diameter. Closed-form solution from Reference 24 is used to estimate the displacement and the strain energy of the plates under this loading conditions. The largest bending moment, and hence the largest bending stress, in such a plate occurs if the loading is applied to the farthest distance from the support. Therefore, the analysis has been performed for the puncture bar hitting the secondary lid of the cask. The strike at the base plate and the primary lid is enveloped by the analysis presented herein. Since the two constitutive plates should have identical deflections, the total drop energy will be allocated to each plate in the ratio of their thicknesses.

Reference page 24 page 415 gives the following equation for the deflection of a centrally loaded circular plate:

$$\frac{y}{h} + A\left(\frac{y}{h}\right)^3 = B\,\frac{Pa^2}{Eh^4}$$

where,

y	=	deflection at the center of the plate
h	=	plate thickness
P	=	central load
E	=	Young's Modulus
a	=	plate radius
A	=	0.272 (simply supported plate, Ref. 24 page 416)
B	=	0.552 (simply supported plate, Ref. 24 page 416)

Solving for P,

$$P = \frac{Eh^4}{Ba^2}\left[\frac{y}{h} + A\left(\frac{y}{h}\right)^3\right]$$

The strain energy can be estimated from

$$U = \int_o^{\delta} P \quad dy$$

$$= \int_o^{\delta} \frac{Eh^4}{Ba^2}\left[\frac{y}{h} + A\left(\frac{y}{h}\right)^3\right] dy$$

$$= \frac{Eh^4}{Ba^2}\left[\frac{\delta^2}{2h} + \frac{A\delta^4}{4h^3}\right]$$

The energy absorbed by the 3 inch thick plate, can be equated to the strain energy as follows:

$$WHx\frac{3}{5.5} = \frac{Eh^4}{Ba^2}\left[\frac{\delta^2}{2h} + \frac{A\delta^4}{4h^3}\right]$$

where,

W	=	weight of the cask, 72,000 lb_f
H	=	drop height, 40 inches
H	=	3 inches
a	=	bolt circle radius, 36.8125 inch
E	=	29 x 10^6 psi

Rearranging,

$$\frac{A\delta^4}{4h^3} + \frac{\delta^2}{2h} = \frac{WH}{1.833}\ \frac{Ba^2}{Eh^4}$$

$$\delta^4 + \left(\frac{2h^2}{A}\right)\delta^2 - \frac{2.1818WHBa^2}{EhA} = 0$$

$$\delta^2 = \frac{-\left(\frac{2h^2}{A}\right) \pm \sqrt{\left(\frac{2h^2}{A}\right)^2 + \frac{4x2.1818WHBa^2}{Eha}}}{2}$$

$$\delta^2 = \frac{h^2}{A}\left[-1 \pm \sqrt{1 + \frac{2.1818WHBAa^2}{Eh^5}}\right]$$

Then, δ = 1.6957 inch

Solving for the force required to produce this deflection,

P = 1.9292 X 10^6 lbs.

This will result in a pressure of $1.9292 \times 10^6 / (\pi \times 3^2) = 68{,}231$ psi over the area of cross section of the puncture bar.

Reference 24, page 415, gives the following equations for the maximum membrane and membrane-plus-bending stresses:

$\sigma_{membrane} = \alpha E \delta^2 / a^2$

$\alpha = 0.407$ (Ref. 24 page 416)

$\sigma_{membrane} = 25{,}044$ psi

Allowable membrane stress = 49,000 psi

Factor of safety = 49,000 / 25,044 = 1.96

$\sigma_{membrane+bending} = \beta E \delta h / a^2$

$\beta = 0.606$ (Ref. 24 page 416)

$\sigma_{membrane+bending} = 65{,}971$ psi

The largest membrane-plus-bending stress in the base plate, the primary lid or the secondary lid during the increased external pressure is 750 psi (see Table A2-34) and during the minimum external pressure is 927 psi (see Table A2-36). Therefore, membrane-plus-bending stress in the end-plates due to combined conditions are:

Puncture + Increased External Pressure = 65,971 + 750
= 66,721 psi

Puncture + Minimum External Pressure = 65,971 + 927
= 66,898 psi

Allowable membrane + bending stress = 70,000 psi

Factor of Safety = 70,000 / 66,898 = 1.05

To obtain the bolt loads due to the puncture accident, a simple 2-dimensional model of the primary and secondary lids was made using ANSYS finite element program. The lids were modeled using axisymmetric isoparametric solid elements and the bolts were modeled using two dimensional beam elements having appropriate area and the moment of inertia. The interfaces between the bolting ring and the primary lid, between the secondary lid and the primary lid and between the plates themselves were modeled using the 2-dimensional interface elements. The results of the analysis for a 68,231 psi loading at the contact area of the puncture bar showed that

due to the puncture accident, the secondary lid transferred the load to the primary lid by the contact

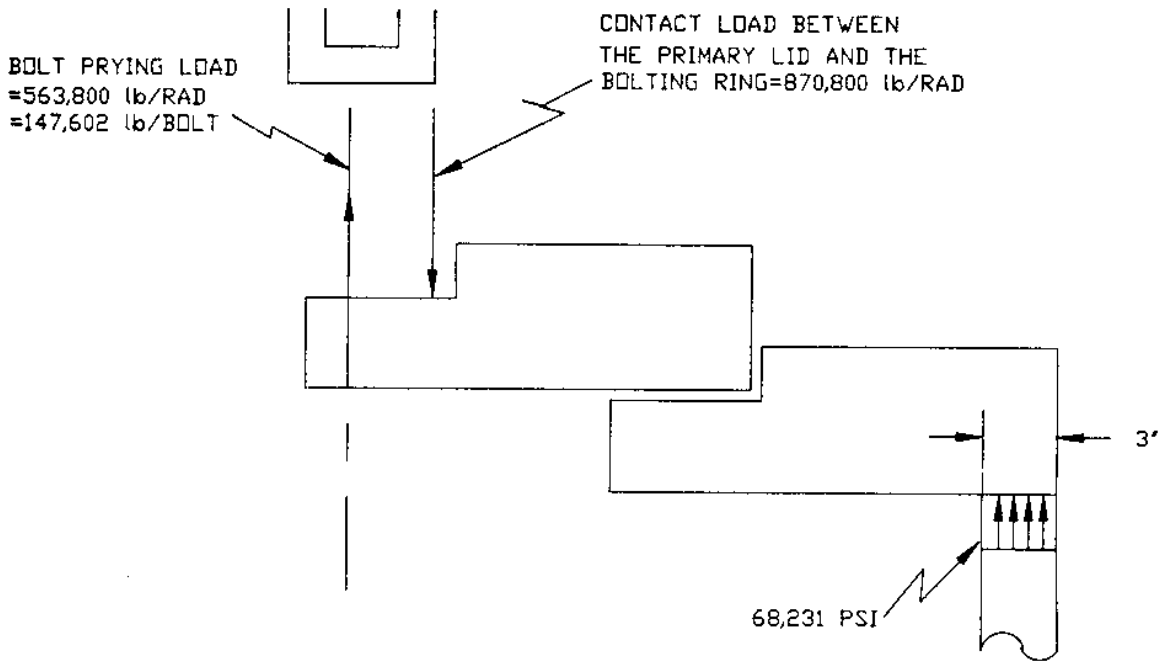

Figure 2-18.1

Load Distribution During the Puncture Accident

Pressure and not through the bolting. However, the primary lid transferred the load to the bolting ring by a prying action, resulting in a bolt load of 147,602 lbs. per bolt.

The bolt stress area = 2.0792 in^2

Therefore,

The bolt tensile stress = 147,602 lbs / 2.0792 in^2
= 70,990 psi

Allowable bolt stress = smaller of ($.7S_u$ or S_y)
= 105,000 psi

Factor of Safety = 105,000 / 70,990 = 1.48

2.7.3 Thermal

2.7.3.1 Summary of Pressures and Temperatures

The maximum temperatures resulting from the hypothetical accident conditions, presented in Sections 3.5.3 and 3.5.4 are summarized as follows:

(1) Maximum containment vessel pressure = 3.12 psig

(2) Temperatures:

Structural shell	352°F
Lead	335°F
Seal Area	352°F

2.7.3.2 Differential Thermal Expansion

Differential thermal expansion between the two shells of the cask and the lead shield along with temperature gradients in the cask has been used in analyzing the stresses in the cask body. Results from various loading conditions, per Reg. Guide 7.8, are presented in Section 2.10.3.2 (Tables A2-29 through A2-32).

2.7.3.3 Stress Calculation

Table 2-25 summarizes the thermal and pressure stresses calculated in Section 2.10.1.5.

Table 2-25

Summary of Largest Secondary Stress Intensity

In 10-160B Cask Under Fire Accident[1]

Cask Component	Stress Classification	S.I. (psi)	Allowable[2] (psi)	Safety Factor
Baseplate	Membrane	1,499	66,300	44.23
	Membrane + Bending	9,992	66,300	6.64
Outer Shell	Membrane	28,565	66,300	2.32
	Membrane + Bending	42,453	66,300	1.56
Inner Shell	Membrane	38,309	66,300	1.73
	Membrane + Bending	49,404	66,300	1.34
Bolting Ring	Membrane	25,231	66,300	2.63
	Membrane + Bending	31,353	66,300	2.11
Primary Lid	Membrane	10,709	66,300	6.19
	Membrane + Bending	29,285	66,300	2.26
Secondary Lid	Membrane	7,588	66,300	8.74
	Membrane + Bending	20,540	66,300	3.23

Notes: (1) These values are calculated using the most conservative assumptions.

See Attachment 5 for the basis of these numbers.

(2) Allowable values for secondary stresses, per ASME Section III, is $3S_m$ at actual
temperature.

2.7.4 Water Immersion

10 CFR 71.73 (c) (4) is not applicable, since no fissile materials are to be carried in the cask.

10 CFR 71.73 (c) (5) requires an immersion in water with a pressure of 21. psig for eight hours. Review of the stresses summarized in Table A2-16 for a 25 psig pressure indicates the stresses are low, and this test will have no significant effect on the package.

2.7.5 Summary of Damage

The structural integrity of the CNSI 10-160B package has been demonstrated, by analytical models, to be maintained during the hypothetical accident conditions. The condition of the package after the hypothetical accident is:

(1) Impact limiters are crushed during the 30 foot drop condition. Cask stresses are less than those prescribed by NRC Regulatory Guide 7.6.

(2) Small local deformations to the external shell may result from the 40 inch puncture condition. There will be no loss of shielding and the containment vessel will not be deformed.

Table 2-6 summarizes the maximum Primary Stresses during the hypothetical accident conditions.

2.8 Special Form

Not applicable since no special form is claimed.

Table 2-26
Summary of Largest Primary Stress Intensity in 10-160B Cask
Under Hypothetical Condition[1]

Cask Component	Stress Classification	S.I (PSI)	Allowable (PSI)	Safety Factor	Reference Table
Baseplate	Membrane	13,919	49,000	3.52	2-15
	Membrane Plus Bending	32,897	70,000	2.13	2-15
Outer Shell	Membrane	33,494	49,000	1.46	2-15
	Membrane Plus Bending	41,711	70,000	1.68	2-15
Inner Shell	Membrane	43,055	49,000	1.14	2-15
	Membrane Plus Bending	58,589	70,000	1.19	2-15
Bolting Ring	Membrane	47,220	49,000	1.04	2-15
	Membrane Plus Bending	51,410	70,000	1.36	2-15
Primary Lid	Membrane	23,505	49,000	2.08	2-20
	Membrane Plus Bending	35,750	70,000	1.96	2-15
Secondary Lid	Membrane	13,801	49,000	3.55	2-15
	Membrane Plus Bending	37,396	70,000	1.87	2-15

[1] See Table 2-1 for accident condition load combination

2.9 Fuel Rods

Not applicable, since fuel rods will not be part of package contents.

2.10 Appendix to Section 2.0

2.10.1 Foam Impact Limiter Analytical Methods

2.10.2 ANSYS Finite Element Analysis of Cask Body Structure

2.10.3 Summarized Results of Cask Structural Calculations

2.10.4 References

2.10.1 Analytical Methods

2.10.1.1 General Discussion Foam Impact Limiter

A summarized discussion of the analytical methods used to evaluate the cask during the drop conditions are provided in this section. The most significant assumption is the use of a quasi-static model wherein the energy absorbing impact limiter is analyzed separately from the cask. The cask is initially assumed rigid in order to determine the maximum loads imposed on it. These maximum loads are applied statically to the cask to permit evaluation of the stresses in the cask. This uncoupled assumption is a realistic approach since most of the impact energy is absorbed by the impact limiter. The impact limiter's design criteria is specifically selected to justify this uncoupled analysis.

The rigid foam impact limiters are designed to absorb all the energy of the drop. No energy is absorbed by the unyielding surface or by deformation of the cask. The analytical methods used to predict the impact limiter's behavior in the end, side and corner drops are all similar. The determination of the impact limiter's behavior is determined from the following energy equation:

$$E = W(h + \delta) = \int F dx$$

where W = Package Weight
H = drop height
δ = maximum impact limiter's deformation
F = Total force developed by the impact limiter at deformation
dx = incremental displacement of the foam

This equation is solved in all three drop orientations. The only difference among the three orientations is the calculation of the total force for the different crushed foam geometries.

Chem-Nuclear Systems has developed a computer program CASKDROP (References 13, 14 & 15) to solve this equation for all three drop orientations. This program accounts for the non-linear stress-strain

relationship of the foam. The actual stress-strain values (see Figure 2.1) for the foam used are input to the program.

2.10.1.2 Cask Drop Computer Model

The following discussion presents the techniques used in the CASKDROP program to evaluate the three drop orientations. The primary variations are (1) the geometrical evaluations used to evaluate the crushed foam portions, and (2) the means of evaluating the crushing effectiveness of the various geometrical regions. The CASKDROP program divides the crushed foam portions into a grade of up to 100 rectanguloid solids and iterates on 2% increments of material strain up to a predetermined limit (70 percent – see Section 2.1.2.1). The effectiveness relates to whether the foam volume is "backed" by the cask body or is unbacked. A constant multiplier is utilized for crushing effectiveness, wherein 1.0 equates to full backing and 0.0 is unbacked. The foam properties (see Figure 2.1) are input into the program at 1% increments of strain.

2.10.1.2.1 End Drop Model

The CASKDROP code calculates the total force, at a given displacement of the impact limiter, with an equation of the following general form:

$$F = K_1A_1\sigma_1 + K_2A_2\sigma_2$$

where, A_1, A_2 = Areas of regions 1 and 2, respectively, (See Fig. A2-1 for region definition.)

σ_1, σ_2 = Stresses in regions 1 and 2, respectively.

K_1, K_2 = Constants for regions 1 and 2, respectively. (1.0 for backed 0.0 for unbacked)

The first term corresponds to the foam that is directly below the cask (backed), and the second term is the foam around the sides of the cask (unbacked), as shown in Figure A2-1.

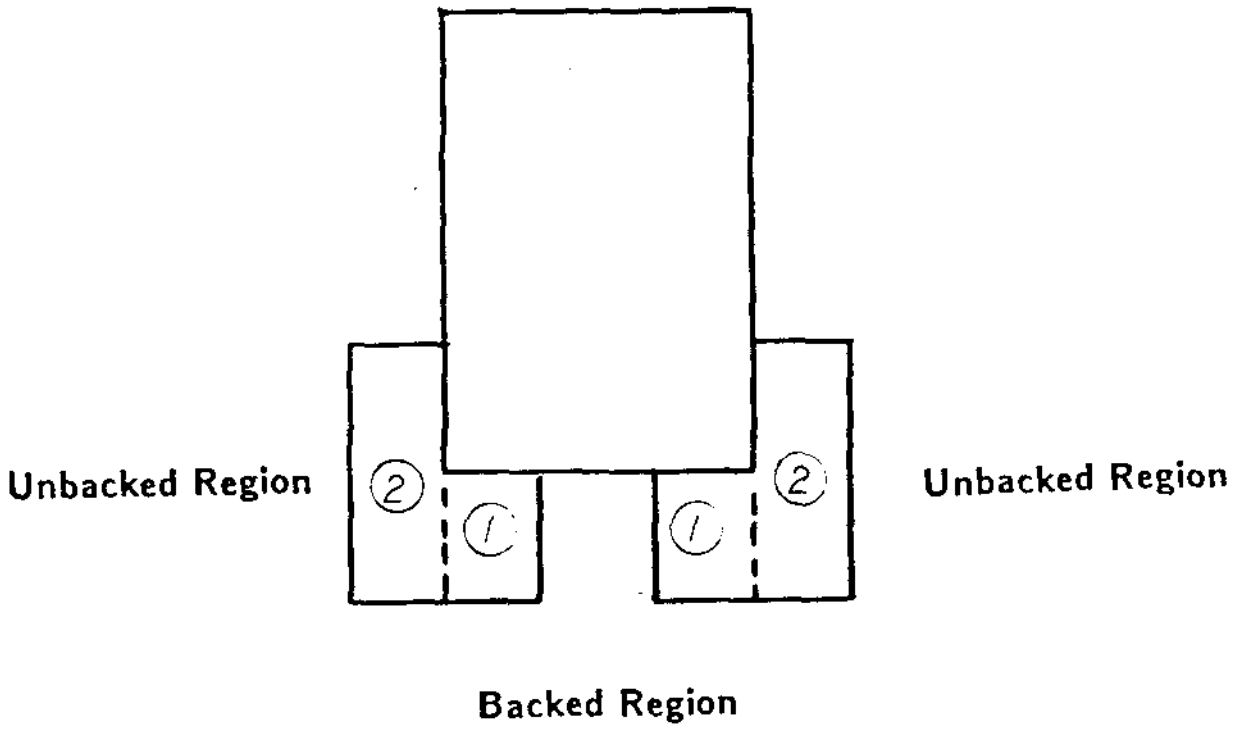

Figure A2-1

End Drop – Region Definition

The program increments the impact limiter deformation until the impact energy is totally absorbed. The maximum force and G load are determined from the impact limiter force at the last displacement increment after all the energy has been absorbed. This load is applied to the cask as an inertia load, as described in Section 2.7.1.1.

2.10.1.2.2 Side Drop Model

The procedure for calculating the force in the side drop is slightly different than the end drop. The strain and stress vary with X as shown in Figure A2-2. The total force is the integration of the stress times the contributing area at a point.

The geometrical parameters are shown in Figure A2-3. In addition, the user can control the effectiveness of the regions shown in Figure A2-4. Control of these regions allows the user to bound the behavior of the impact limiter. Control of the backed and unbacked regions (see Section 2.10.1.2 for a description), variation of foam stiffness properties and other parameters within the CASK DROP code allows the user to conservatively bound the behavior of the impact limiter.

The side drop calculation results in forces, or pressures, on contributing areas as a function of X as shown in Figure A2-3.

Once the maximum load developed by the impact limiter on the cask has been determined, the load is applied statically to the cask, and resisted by the deceleration inertia of the cask and contents. It should be noted that bounding assumptions are used to conservatively bound the uncertainties of the impact limiter's behavior.

2.10.1.2.3 Corner Drop

(a) General

The corner drop method is very similar to the side drop, except the strains, stresses and forces on the cask are calculated on a two dimensional grid shown in Figure A2-5.

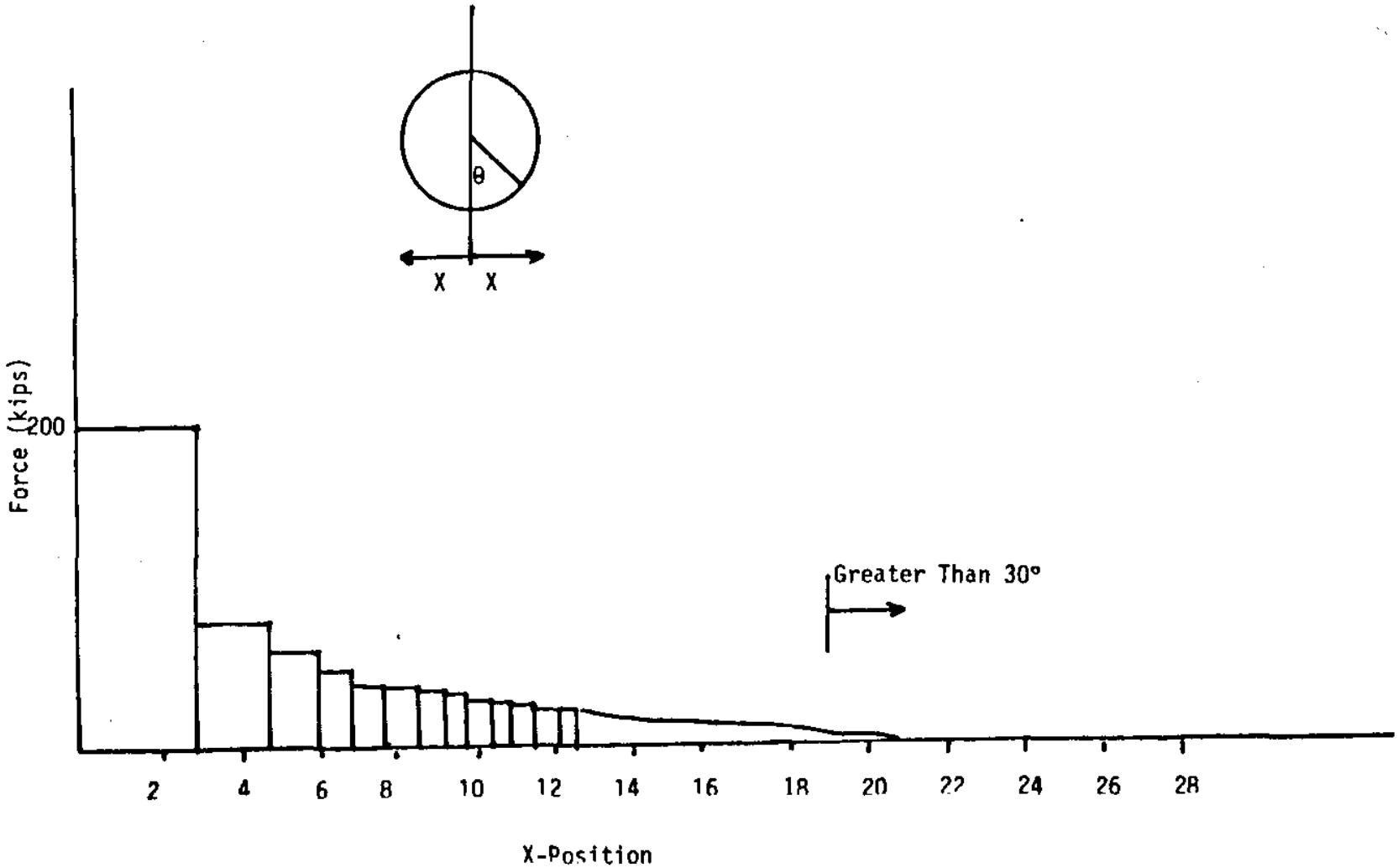

Figure A2-2

Side Drop – Circumferential Load Distribution

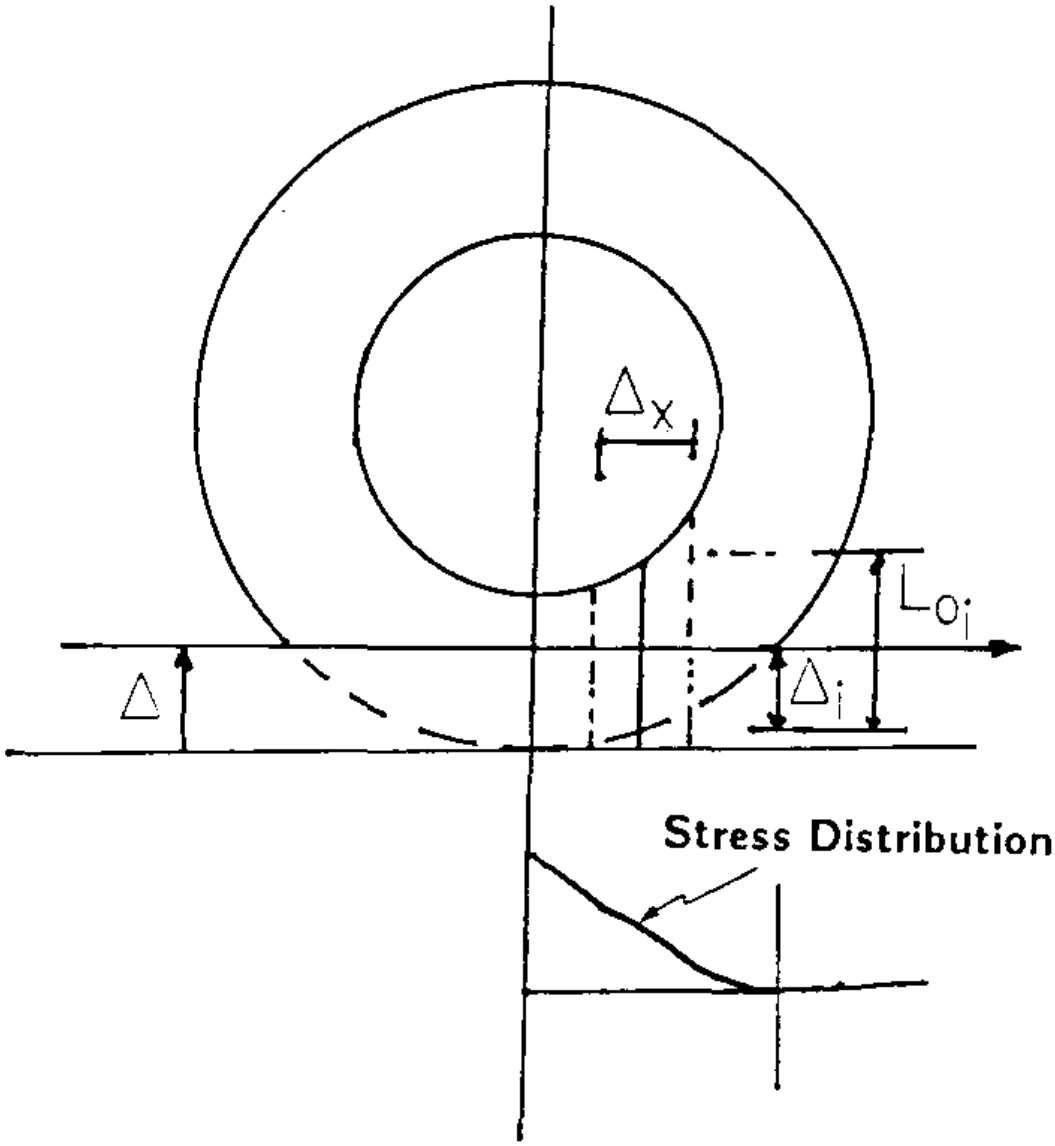

Figure A2-3

Side Drop – Variable Definition

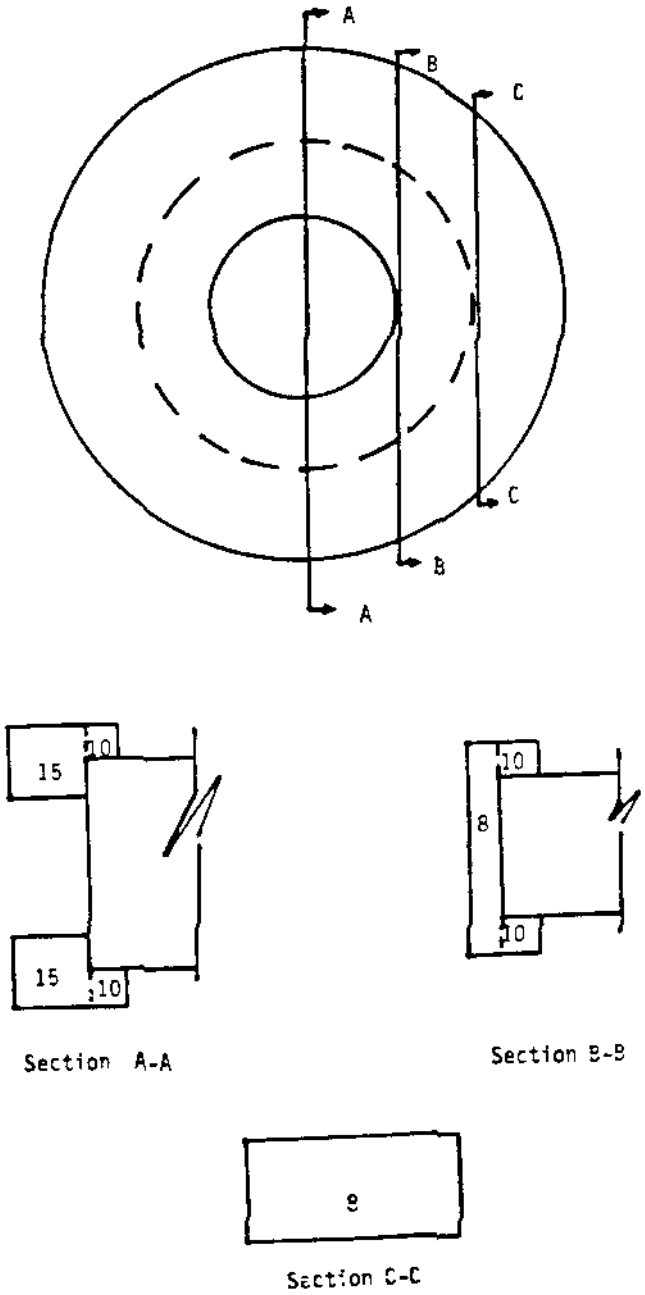

Figure A2-4

Side Drop – Region Definition

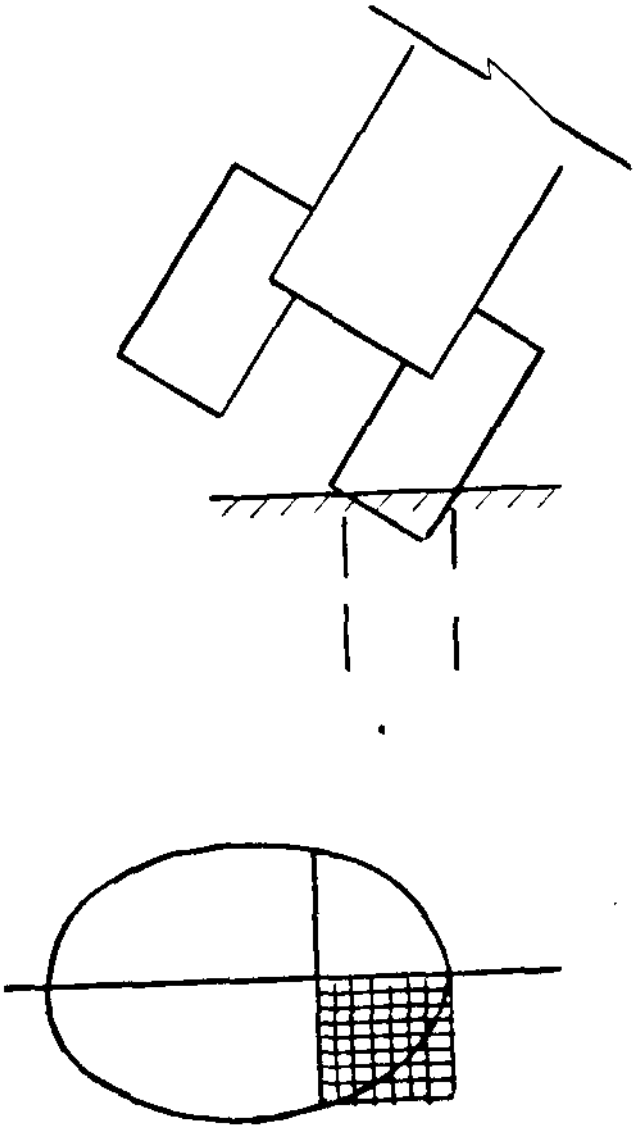

Figure A2-5

Corner Drop – Crush Plane and Grid

At each iteration, or displacement of the impact limiter, the program calculates strain, stress and force at each grid point. The displacement is incremented until all the energy of the drop is absorbed. The forces and pressures on the grid area corresponding to the last iteration are printed by the program.

The corner drop portion of the code also allows the user to selectively control the effectiveness of different regions of the impact limiter. The regions for the 10-160B cask at 33.4° (impact angle where the cask corner is over the center of gravity) are shown in Figure A2-6.

(b) Loading

The vertical loading on the cask is according to the following equation, which assumes the impact limiter and the cask are uncoupled and rigid.

$F_T = M_c\ a_c + M_p\ a_p + M_{UIL}\ a_{UIL}$

F_T = Total lower impact limiter load on the cask (lbs)

M_c = Mass of the cask (lbs)

M_p = Mass of the payload (lbs)

M_{UIL} = Mass of the upper impact limiter

a_c = Acceleration of cask (G's)

a_p = Acceleration of payload (G's)
a_{UIL} = of upper impact limiter (G's)
For a static analysis $a_c = a_p = a_{UIL}$, therefore,
$F_T = (M_c + M_p + M_{UIL})\ A_c$

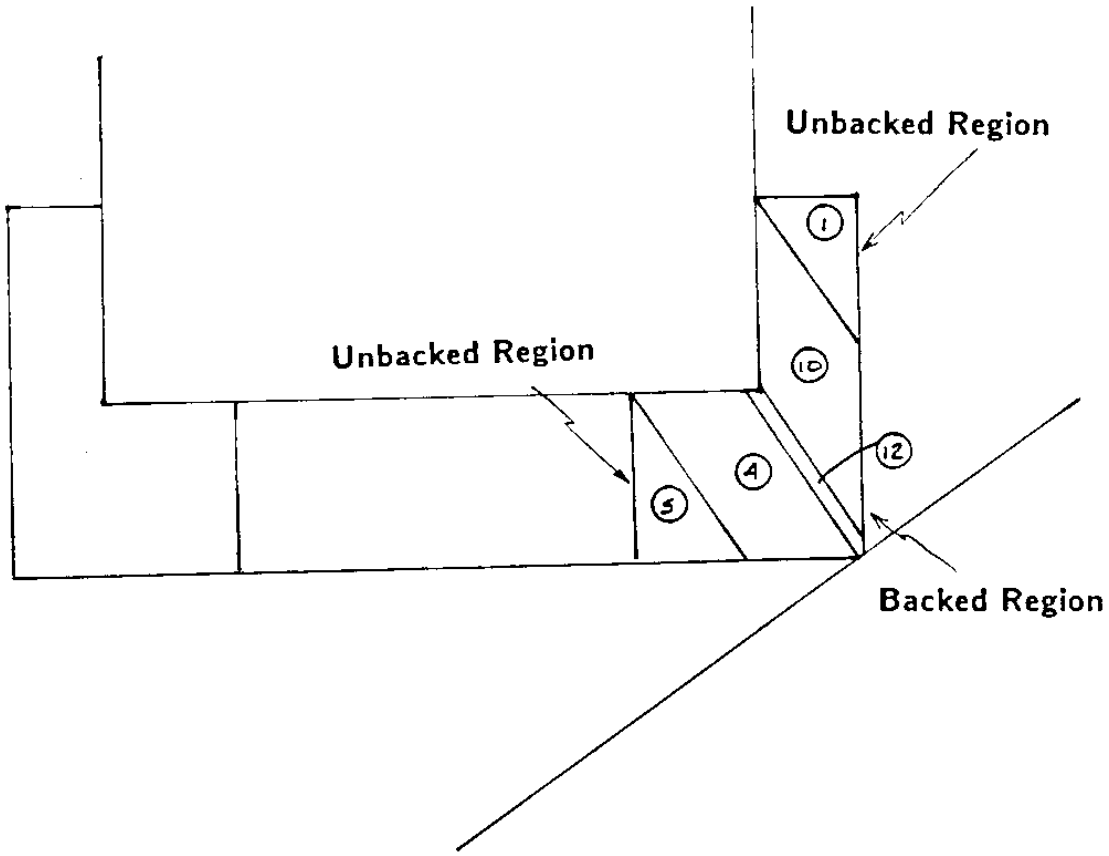

Figure A2-6

Corner Drop – Regions Along Center Line

(c) Load Application

These loads are applied to the finite element model in the following manner:

(1) The F_T component of load is applied as nodal loads on the cask with the CORNVT program (Ref. 16). This program projects the footprint pressure calculated by the CASKDROP code up to the nodal locations on the model. This program requires the nodal point location and corresponding contributing area on the surface of the code to be input.

(2) The inertia load of the cask, $M_c\ a_c$, is applied as an inertia load in the finite element model.

(3) The payload's inertia load, $M_p\ a_p$, is applied as nodal loads to the inside of the cask. The longitudinal component of the payload inertia is uniformly distributed over the inside of the lid. The transverse component of load is distributed along the inside of the cask as a cosine variation of radial pressure. Both these load or pressure distributions are shown in Figure A2-7. The PAYLOAD program (Ref. 17) performs this transformation.

(4) The upper impact limiter's inertia load, M_{UIL}, a_{UIL}, is uniformly distributed around the upper edge of the cask as shown in Figure A2-8.

The acceleration of the cask A_c, is determined with the following equation:

$$a_c = \frac{F_T}{M_c + M_p + M_{UIL}}$$

It should be noted that the mass of the lower impact limiter is conservatively neglected. The F_T value calculated by the CASKDROP code does include the inertia loads of the lower impact

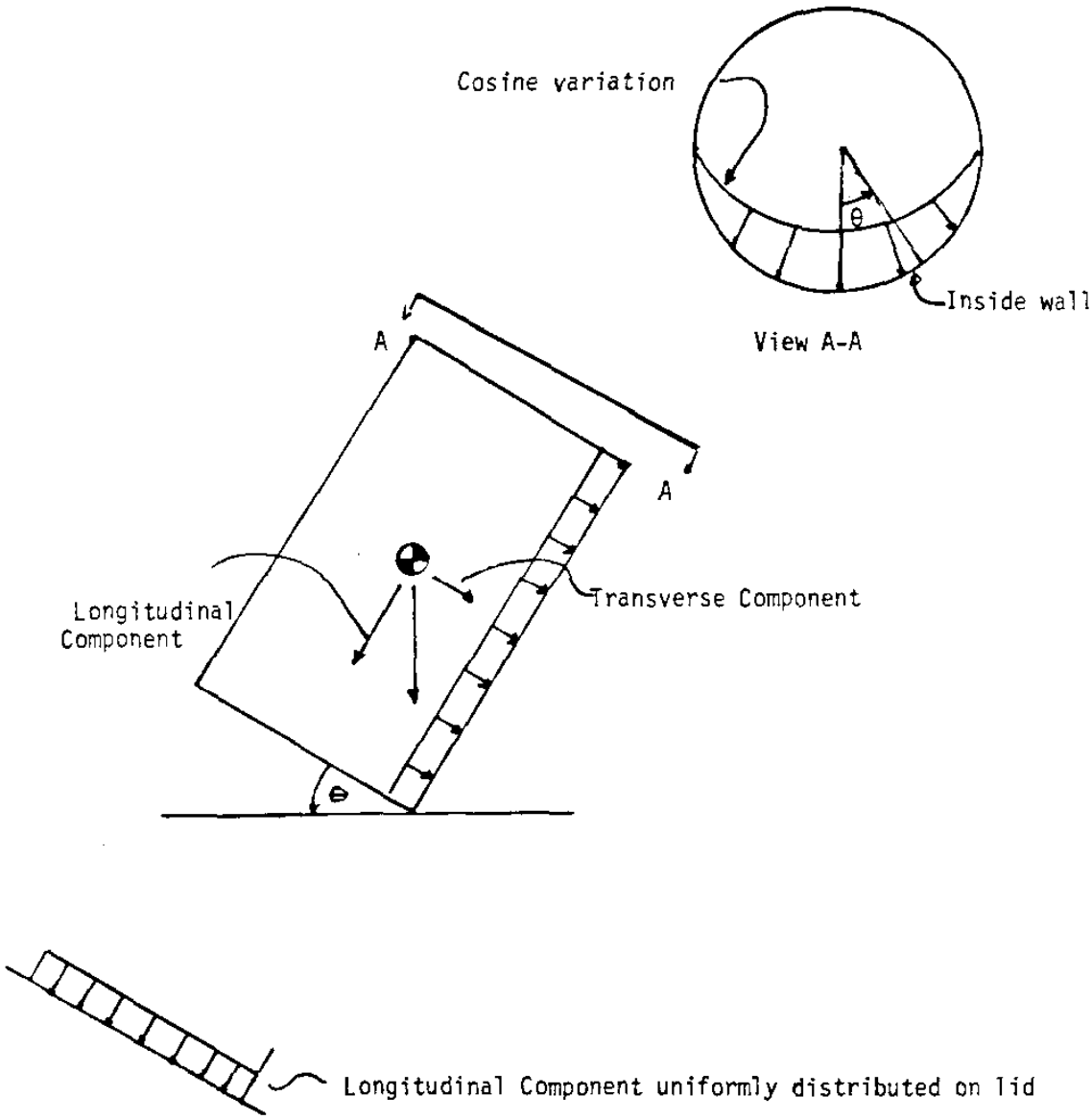

Figure A2-7

Corner Drop – Payload Inertia Distribution

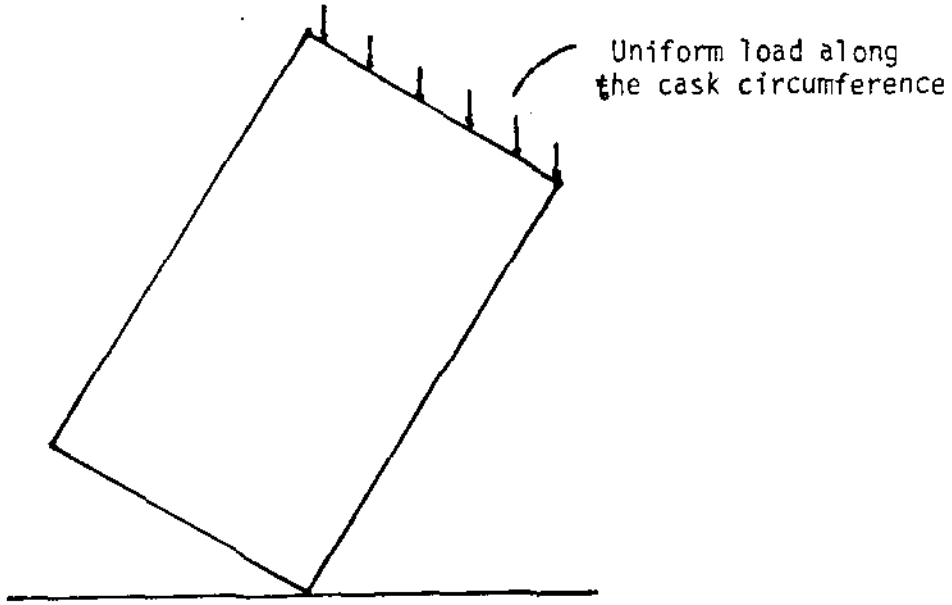

Figure A2-8

Upper Impact Limiter Inertia Distribution

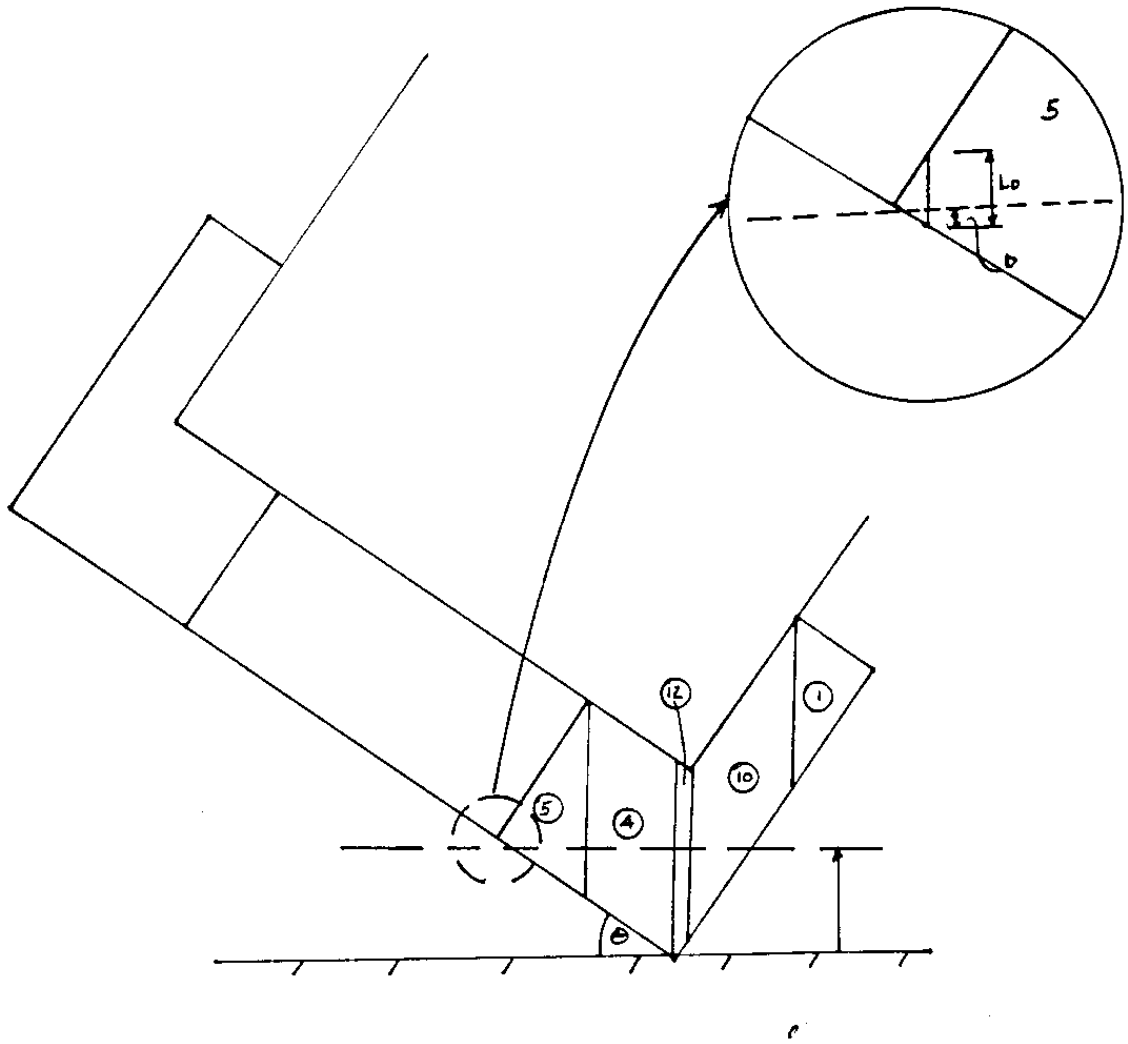

Figure A2-9

Corner Drop – Regions Along Cask Centerline

limiter, therefore, the acceleration in this equation is conservatively calculated.

(d) Angle of Impact

The angle of impact is selected so that effectively the center of pressure of the inertia loads is directly over the center of pressure of the impact limiter loads at the maximum load. This results in no net moment applied to the cask and no energy transformed into rotational energy of the cask. The entire drop energy is absorbed by the lower impact limiter.

(e) Foam Effectiveness

The impact limiter has two classes of regions, backed and unbacked. Backed regions project vertically up to the cask body, and unbacked regions do not project vertically up to the cask body. Figure A2-6 illustrates backed and unbacked regions of the impact limiter.

The maximum load the impact limiter imposes on the cask during a 30 foot drop is determined by considering all regions of the impact limiter effective and using the stiffer stress – strain curve of the foam. The maximum deceleration of the cask corresponding to this fully backed case is 71 G's. This is the acceleration applied to the cask for the structural evaluation of the cask body.

This 71 G's is a conservative calculation of the maximum G load on the cask during the corner drop. The calculational method of the CASKDROP code for strain in region 5, shown in Figure A2-6, results in a very significant contribution from region 5, an unbacked region. The CASKDROP code's definition of strain in region 5 results in very large strains and loads in this region that could not physically develop. The CASKDROP results for the stiff foam, excluding region 5, is only 60 G's on the cask body. Hence, the 71 G applied to the cask is a very conservative upper limit of load on the cask body.

2.10.1.3 Impact Limiter Chamfer

The impact limiters are chamfered around the bottom and top corners, as shown in Figure A2-10. The change in behavior of the impact limiter due to the chamfer is discussed in the following sections:

End Drop

The chamfer is in the unbacked region. Hence, the chamfer will not alter the predicted maximum displacement or maximum G-load obtained by bounding analysis.

Side Drop

The chamfer is in the unbacked region. Hence, the Chamfer will not alter the predicted maximum displacement or maximum G-load obtained by bounding analysis.

Corner Drop

Some of the material removed by the chamfer is in the backed region of the impact limiter during the corner drop, hence, the behavior of the impact limiter will be altered slightly. Removal of the chamfer material results in more uniform strain with the maximum strain lowered. The resultant effect is seen in the following analysis:

Since material is removed, the crush end-point is moved slightly inward (towards the cask body). To determine the crush distance end point, it is assumed that the volume removed by the chamfer results in an increased crushing of the foam corresponding to the volume removed by the chamfer.

From the CASKDROP results (Ref. 18) for a backed corner drop, at 33.4°, the displacement and crush plane area are 15.61 in. and 2224 in.^{2}, respectively.

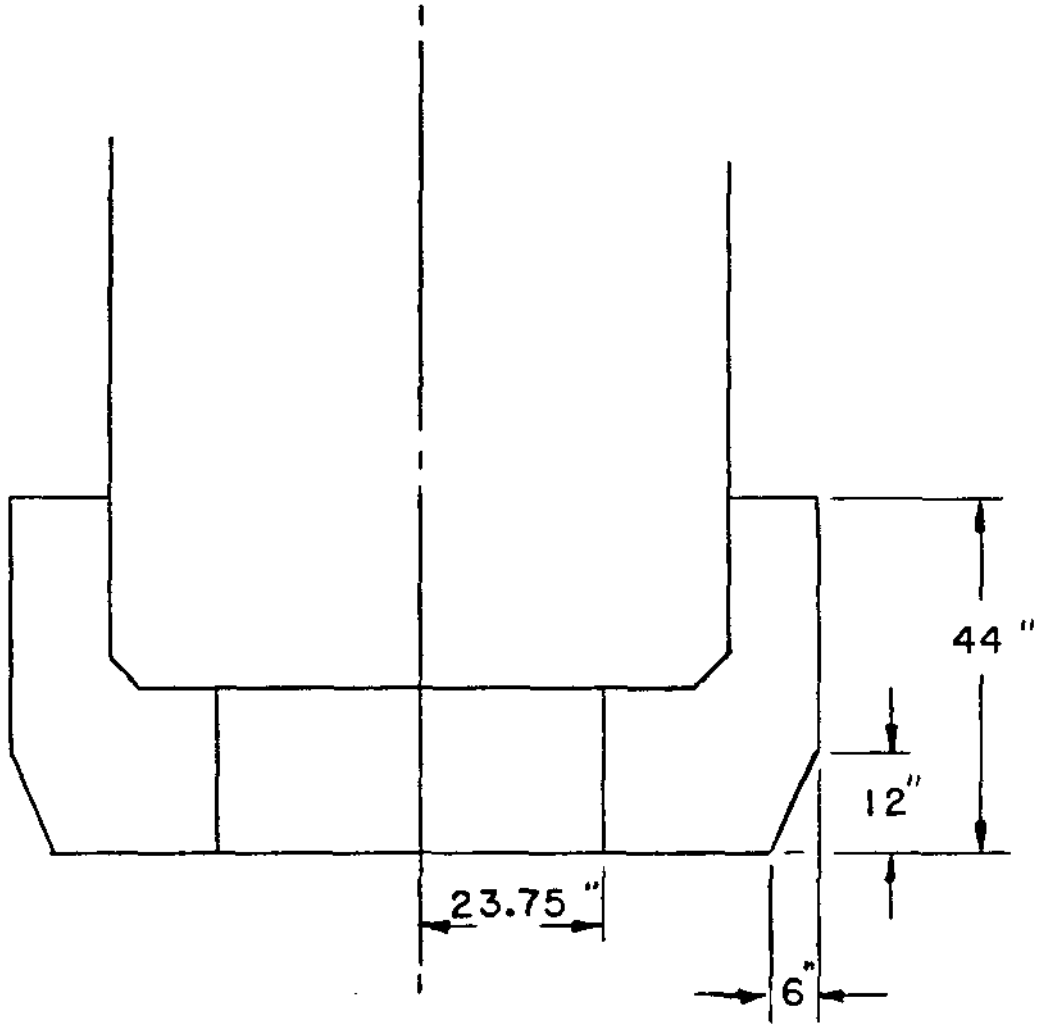

Figure A2-10

Chamfer Geometry

The radius of the centroid of the chamfer triangle is:

$R_T = 51\text{-}2 = 49$”

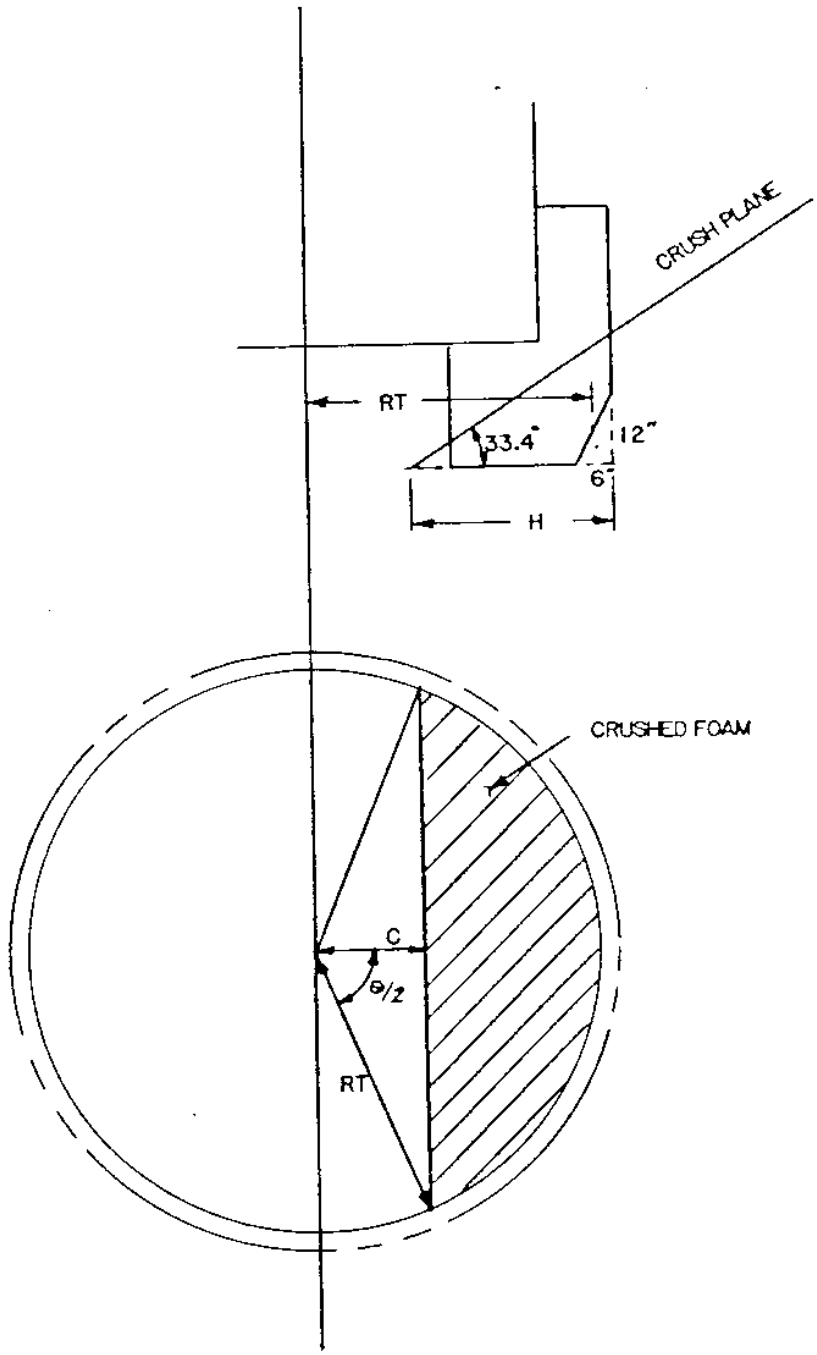

$$H = \frac{15.61}{\sin 33.4°} = 28.36 \text{ in.}$$

$$C = 51\text{-}28.36 \qquad = 22.64 \text{ in.}$$

$$\frac{\theta}{2} = \cos^{-1}\frac{(22.64)}{49} = 1.09 \text{ rads}$$

$\theta = 2.180$ rads

S = arc length of centroid of chamfer = $R_T\ \theta$

= (2.180) (49) = 107 in

The area of the chamfer is:

1/2 (12) (6) = 36 in^2

Volume of crushed chamfer

A_S = (36) (107) = 3876 in^3

Assuming that energy absorption is proportional to the crushed volume (ie. a rigid-plastic stress-strain curve), the increase in displacement, assuming the crush area is constant, is:

$$\frac{3876}{2224} = 1.7 \text{ in.}$$

The maximum strain in the CASK DROP results at Section A-A in Figure A2-11 is (obtained graphically)

original length = 24.0 in.
crush distance = 14.75 in.

$$\text{strain at A-A} = \frac{14.75}{24} = .615 \text{ or } 61.5\%$$

For the case with the chamfer,
original length at A-A = 18.25 in.
crush distance at A-A = 10.25 in.

$$\text{strain} = \frac{10.25}{18.25} = .56 = 56\%$$

As noted above, the chamfer results in lower strains at the point of maximum strain. The strain, and pressures applied to the cask, are distributed more uniformly. Similar results were calculated for the unbacked cases.

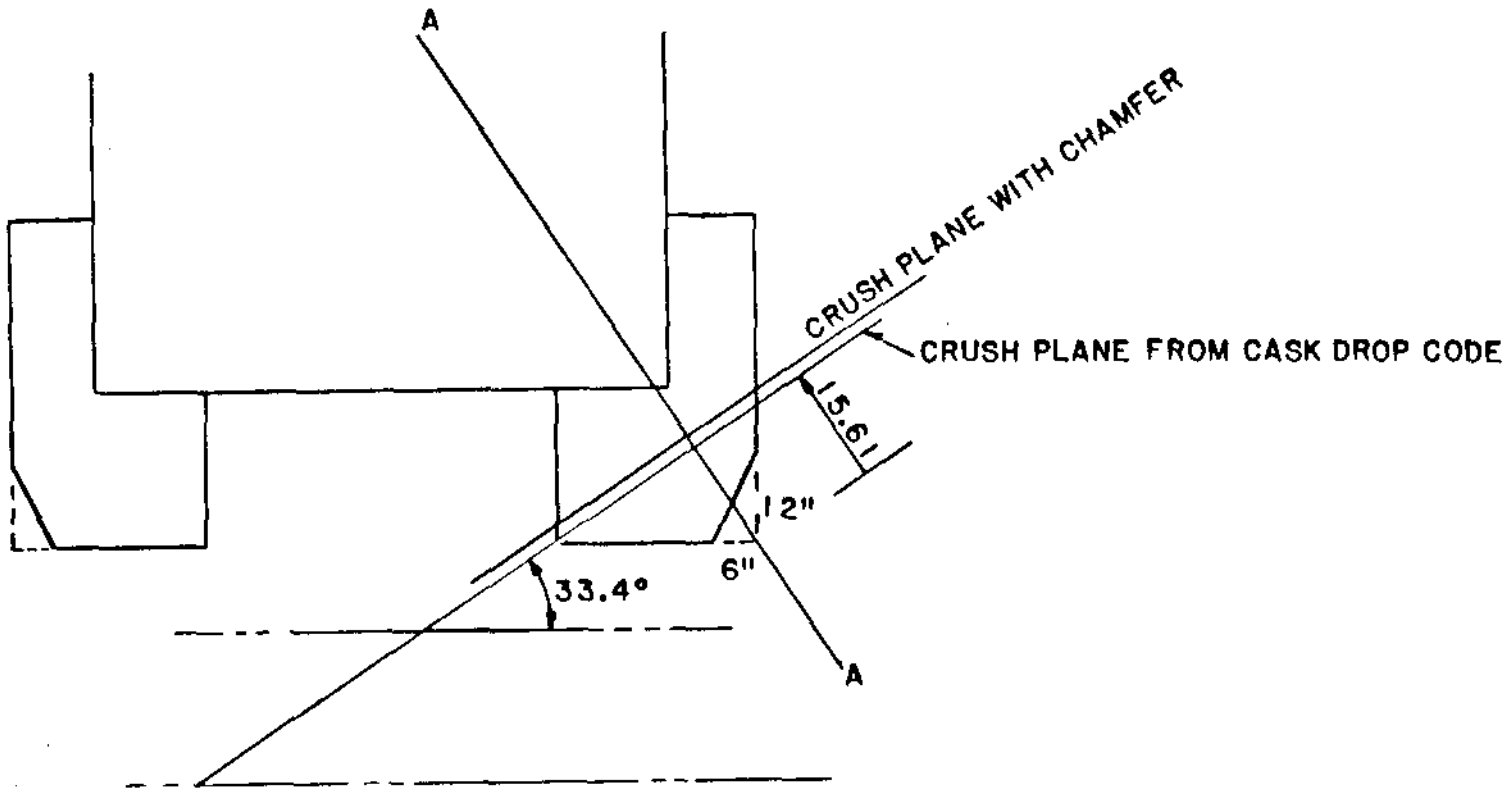

Figure A2-11

Corner Drop – Chamfer Effect

The chamfer will not significantly alter the maximum G load applied to the cask (from the maximum load obtained by ignoring the chamfer). The side drop load on the cask were obtained with the CASKDROP code, which did not include the effect of the chamfer (this is conservative).

2.10.2 ANSYS Finite Element Analysis

Stress analyses of the cask body for three drop conditions (end, side and corner) were performed using the ANSYS (Ref. 8) finite element program. This section describes the modeling and solution techniques used in the analyses.

2.10.2.1 Finite Element Model Discussion

A three dimensional elastic finite element model of 10-160B cask was constructed using 8-node isoparametric solid elements (ANSYS STIF 45). Since the three drop conditions – side, corner, and end – result in at most one plane of symmetry, only one half of the cask geometry was modeled. The entire cask geometry was divided into seven substructures (see Figure A2-12). Substructuring techniques were employed in the modeling because of the following advantages they offered:

- Independent component modeling.
- Separation of fixed design portion of the cask from portion undergoing design changes.
- Detailed modeling of the portion of the cask where the worst case stress concentration is expected under various loading conditions.

The mesh size in each substructure was determined from two basic considerations, namely, (1) vicinity from the point (or line) of impact and (2) the level of stress anticipated at that location. For instance, the portion of the cask away from the point of impact was modeled by coarser mesh than that near the impact. Also, the portions of the cask near the shell-base plate and shell-upper ring junctures, where higher stresses are expected (due to geometric

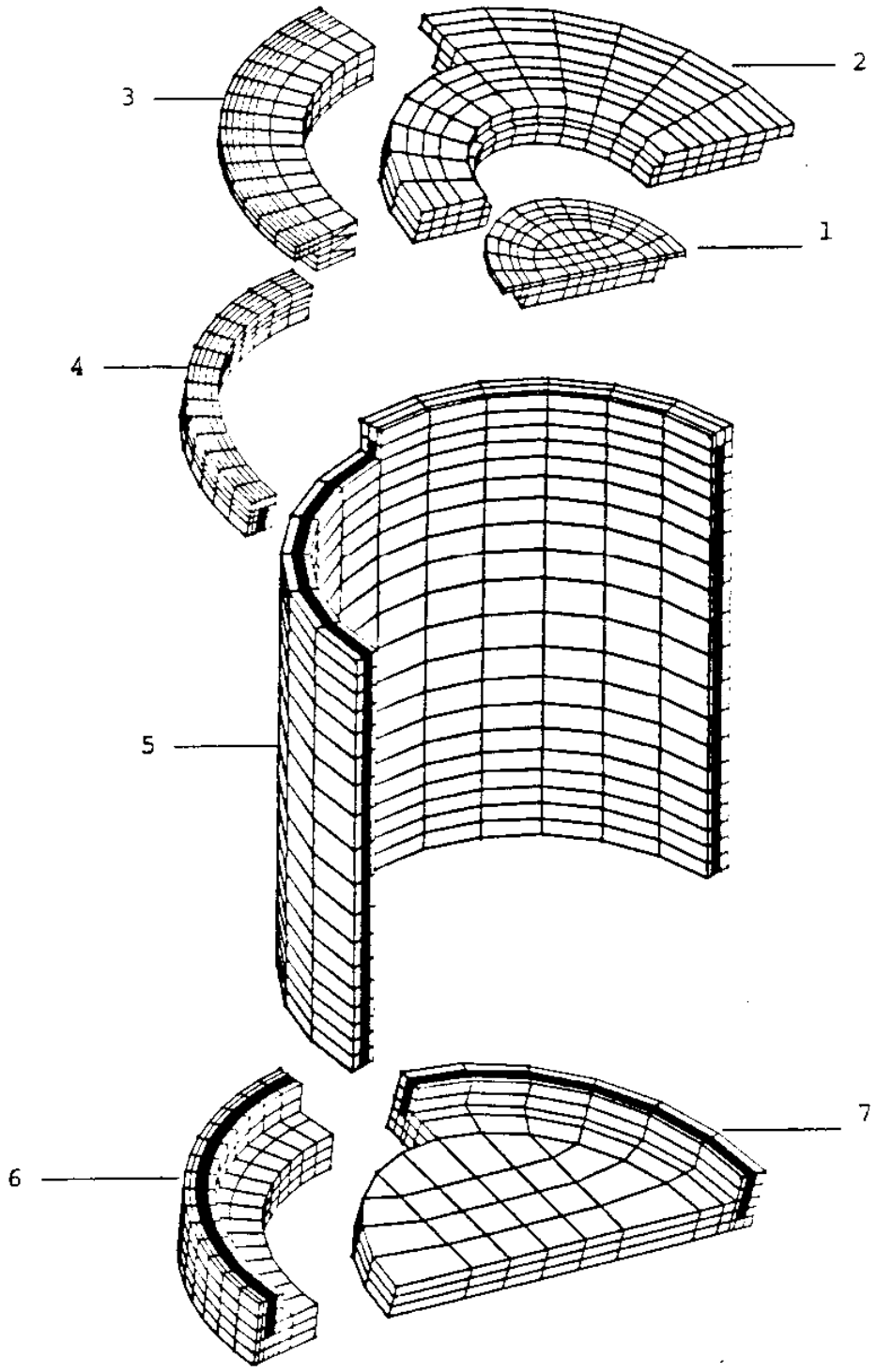

X = reference substructure number

Figure A2-12

Finite Element Model – Substructure Overview

discontinuity) were modeled using a finer mesh. The arc angle of the finite element was kept under the ANSYS recommended value of 15 degrees in the coarse mesh and 6 degrees in the fine mesh. The aspect ratio of the elements (i.e. length to width ratio) is always less than eight. Care was taken to ensure that there was a gradual transition between the fine and coarse portions of the model.

Following is a list of the substructures used in the model:

Substructure No. 1 – Secondary Lid (see Figure A2-13)

Substructure No. 2 – Primary Lid away from impact (see Figure A2-14)

Substructure No. 3 – Primary Lid near impact (see Figure A2-15)

Substructure No. 4 – Upper Ring, Shells and Lead near impact (see Figure A2-16)

Substructure No. 5 – Shells, Lead away from impact (see Figure A2-17)

Substructure No. 6 – Shells, Base Plate near impact (see Figure A2-18)

Substructure No. 7 – Shells, Base Plate away from impact (see Figure A2-19)

Figure A2-12 shows these substructures relative to their location in the overall model of 10-160B cask. Figures A2-13 to A2-19 show the enlarged view of each substructure with node numbers and Figures A2-20 to A2-26 show those with the element numbers. Table A2-1 summarizes the size of the substructures used in the analysis. Table A2-2 lists the material properties used in the model.

TABLE A2-1

10-160B CASK FINITE ELEMENT MODEL SUBSTRUCTURE DETAIL

SUBSTRUCTURE NO.	NO. OF NODES	NO. OF ELEMENTS	NO. OF MDOF(2)	MASS (lb.)
1	275	156	169	863
2	383	216	385	1,871
3	496	209	266	678
4	576	232	275	437
5	1548	704	450	12,385
6	318	362	298	1,319
7	384	198	274	3,127

GENERAL NOTES:

(1) See Figure A2-12 for substructure geometry plot.

(2) MODF = Master Degrees of Freedom.

TABLE A2-2

MATERIAL PROPERTIES USED IN THE DROP ANALYSIS

MATERIAL	PROPERTY	ANSYS AYMBOL	VALUE	UNIT
STEEL	MODULUS OF ELASTICITY	EX	$28x10^{6}$	psi
	COEFFICIENT OF THERMAL EXPANSION	ALPX	$8.67x10^{-6}$	in/in-°F
	POISSONS'S RATIO	NUXY	0.30	-
	WEIGHT DENSITY	DENS	0.283	lb/in^{3}
LEAD	MODULUS OF ELASTICITY	EX	2 x106	psi
	COEFFICIENT OF THERMAL EXPANSION	ALPX	$16.5x10^{-6}$	in/in-°F
	POISSONS'S RATIO	NUXY	0.40	-
	WEIGHT DENSITY	DENS	0.4109	lb/in^{3}

NOTES: (1) Material properties are estimated at 150° F.

\

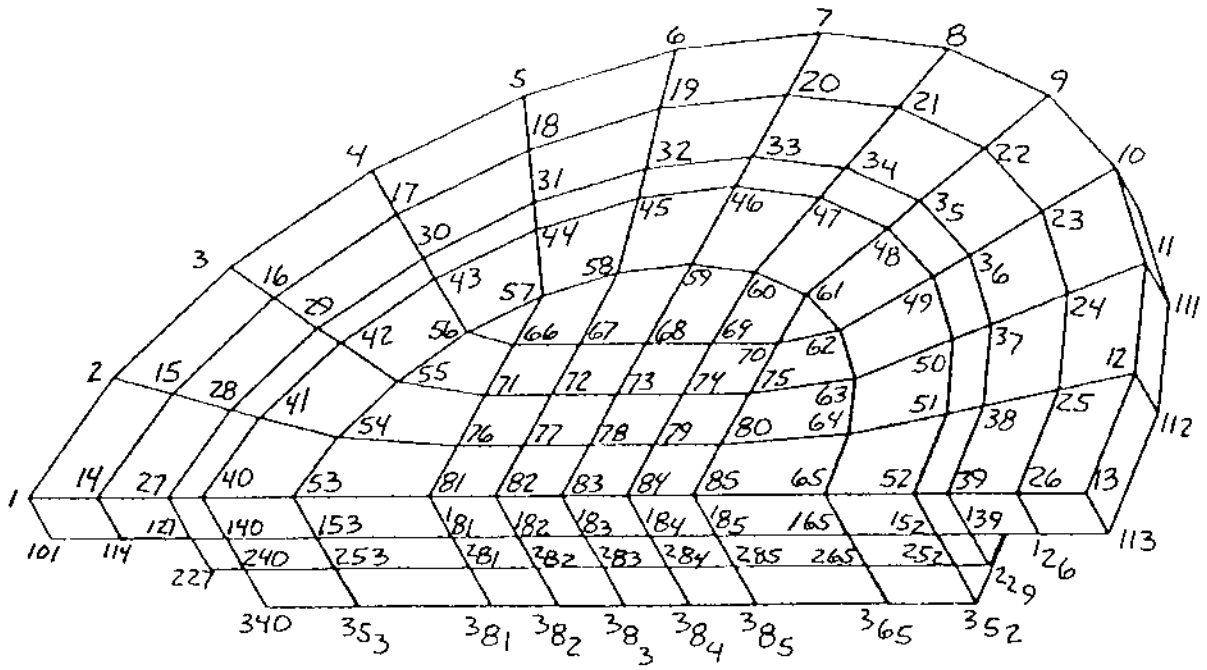

Figure A2-13
Substructure No. 1 – Node Numbers

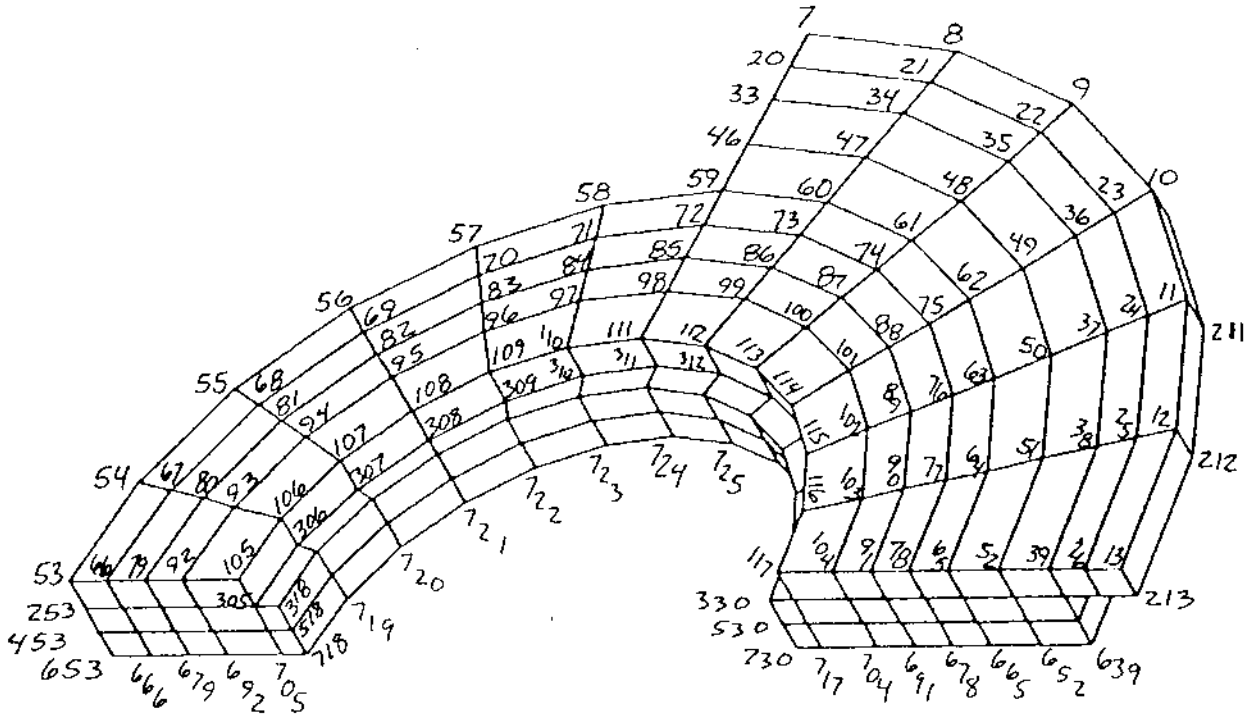

Figure A2-14
Substructure No. 2 – Node Numbers

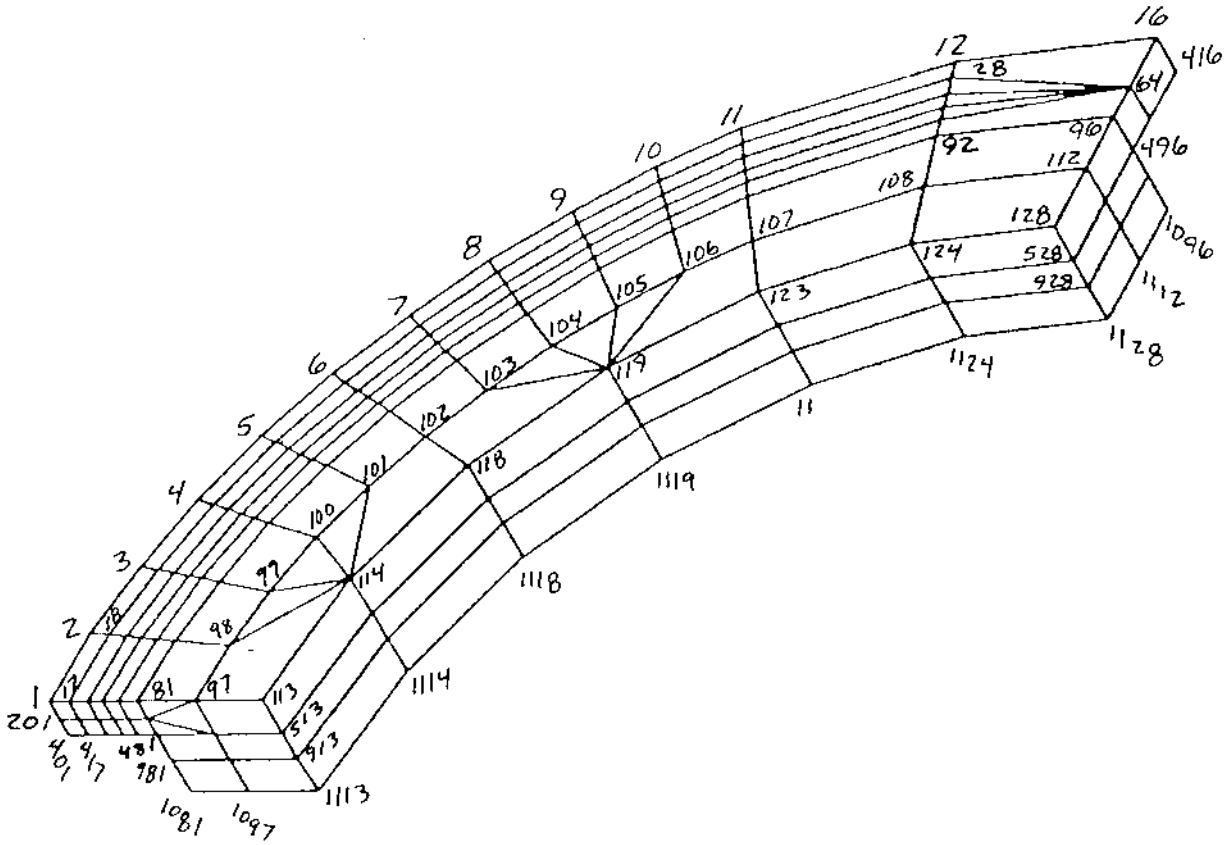

Figure A2-15
Substructure No. 3 – Node Numbers

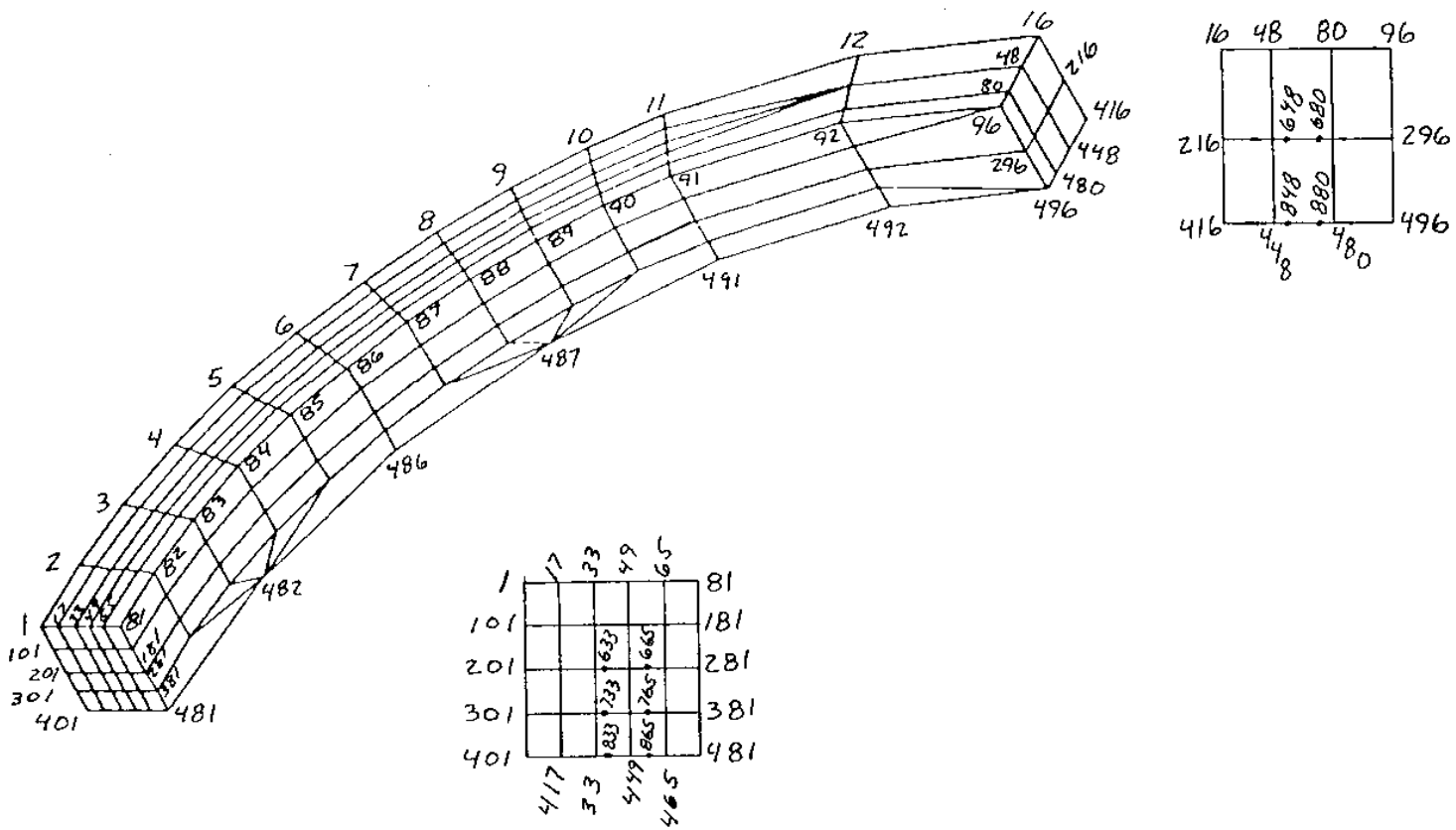

Figure A2-16
Substructure No. 4 – Node Numbers

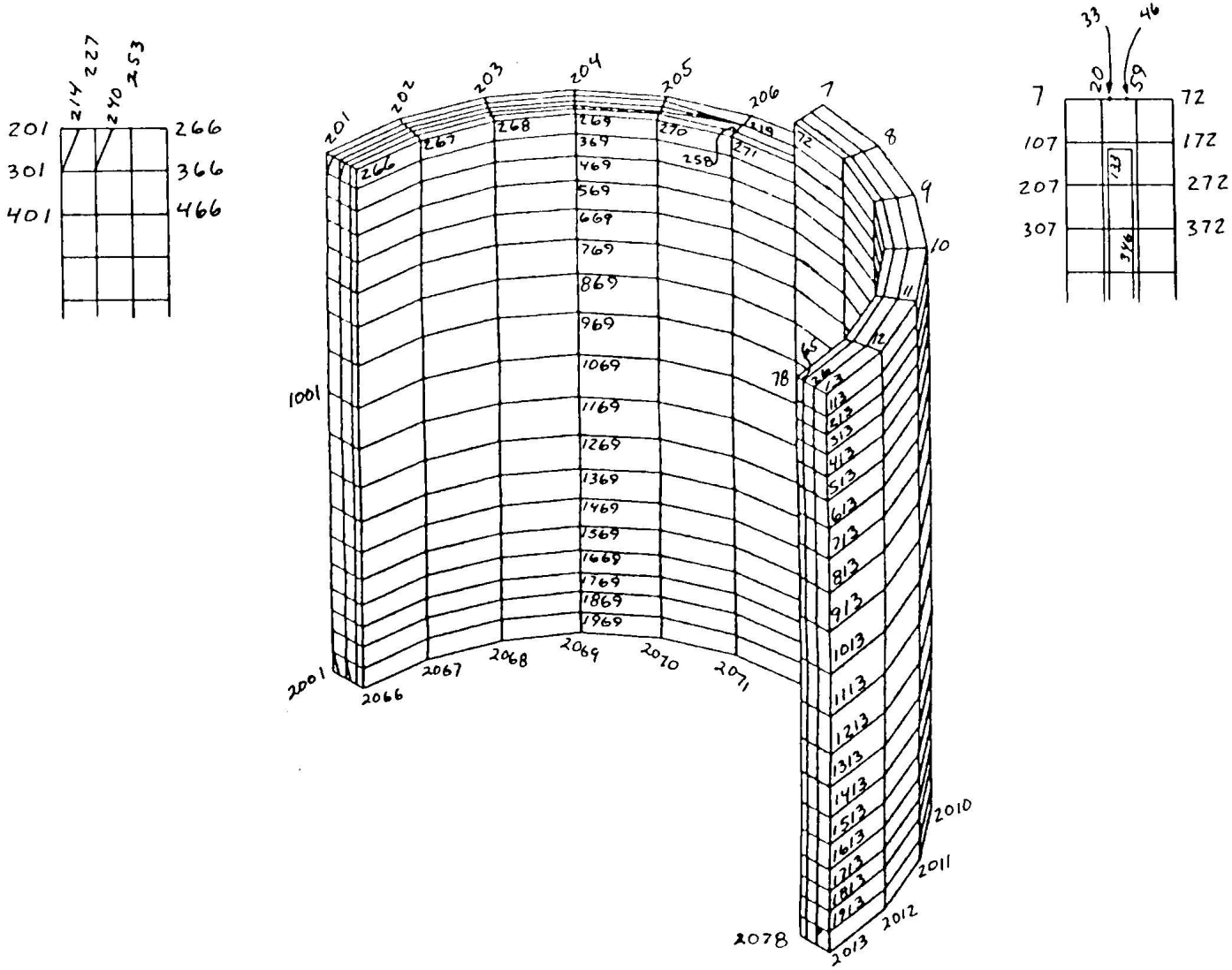

Figure A2-17
Substructure No. 5 – Node Numbers

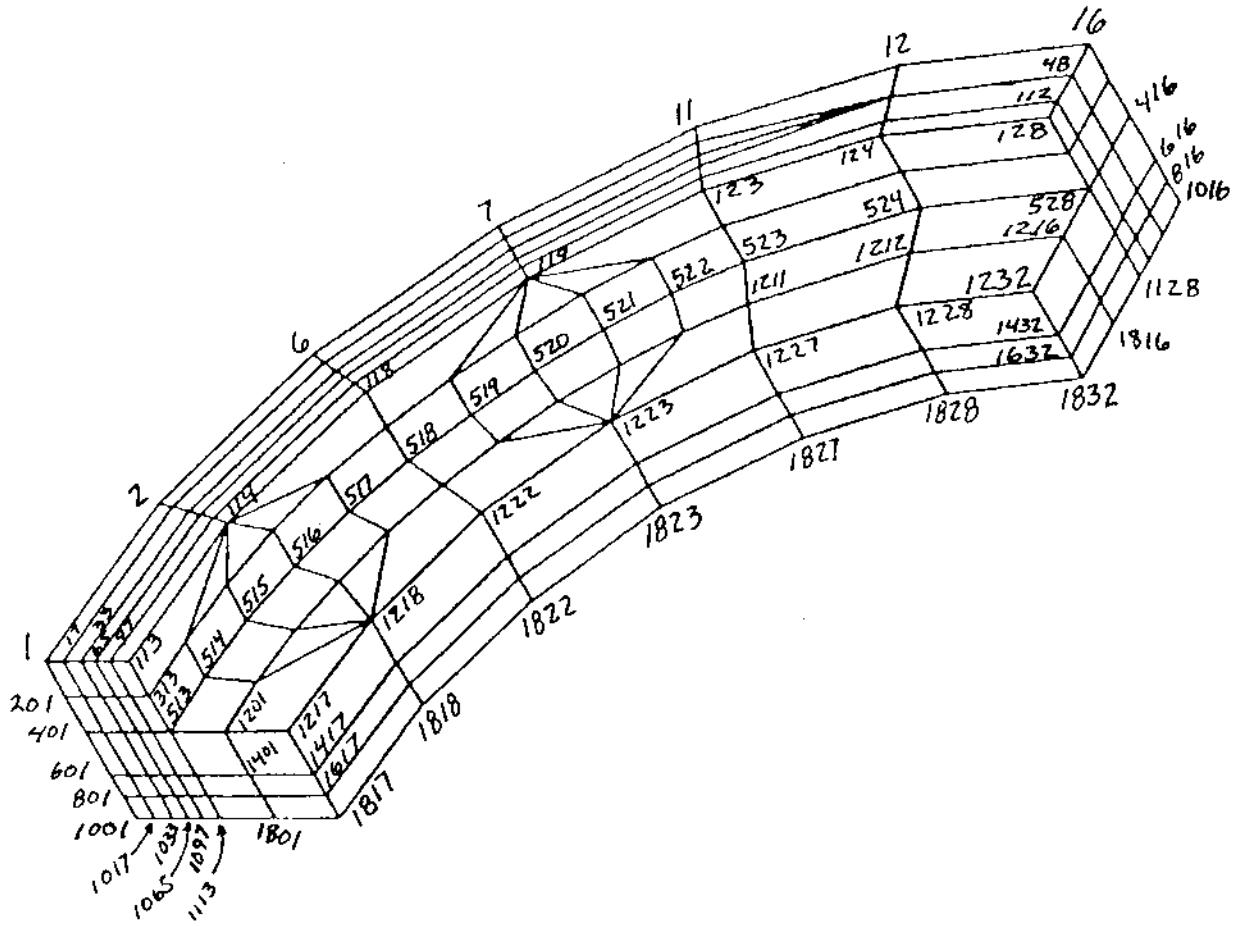

Figure A2-18
Substructure No. 6 – Node Numbers

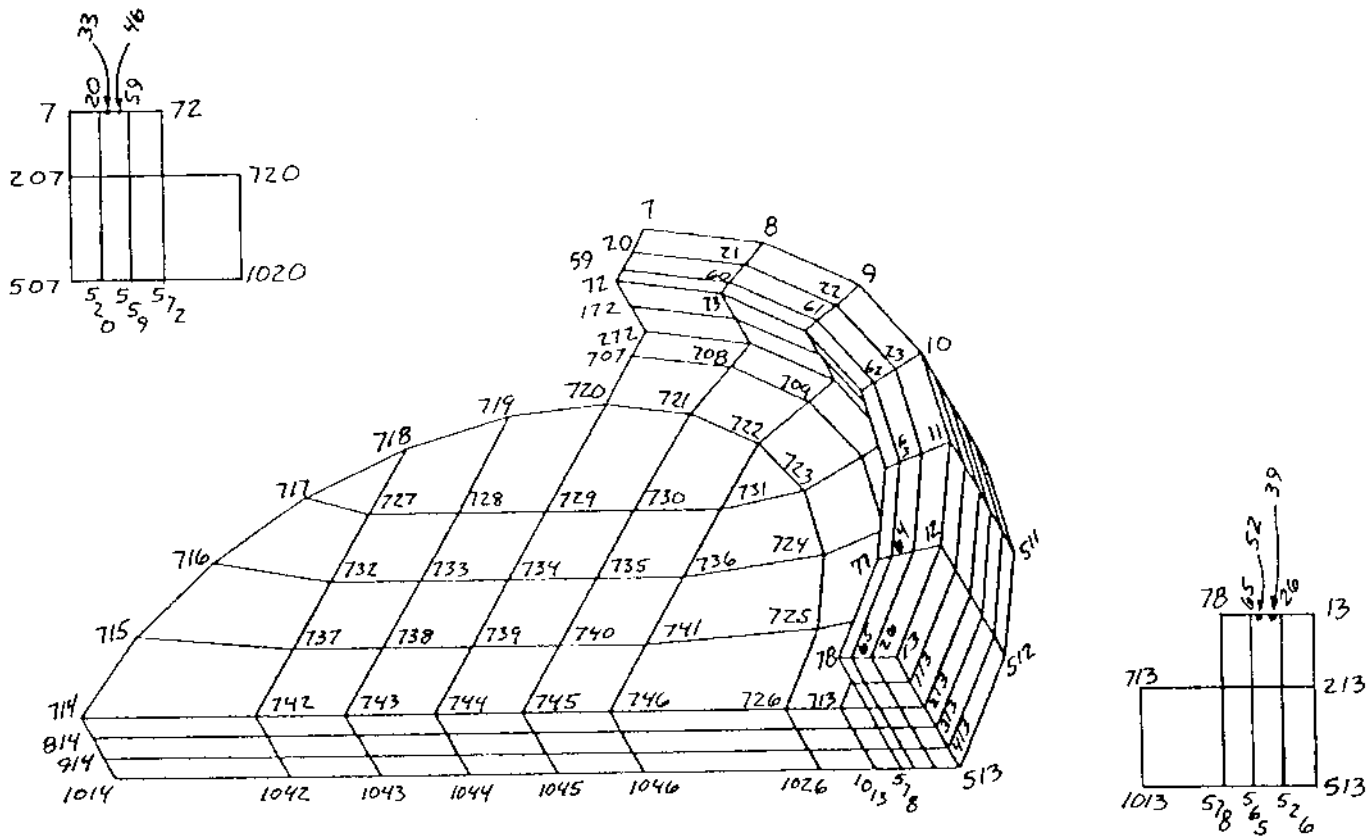

Figure A2-19
Substructure No. 7 – Node Numbers

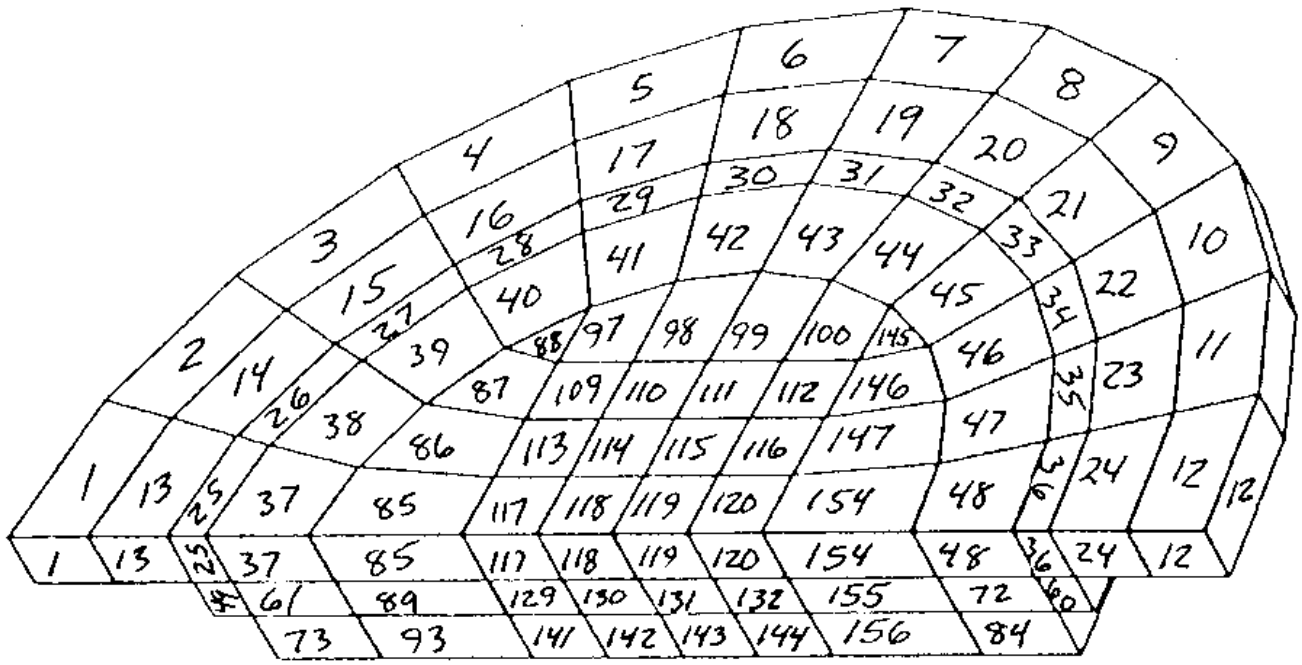

Figure A2-20
Substructure No. 1 – Element Numbers

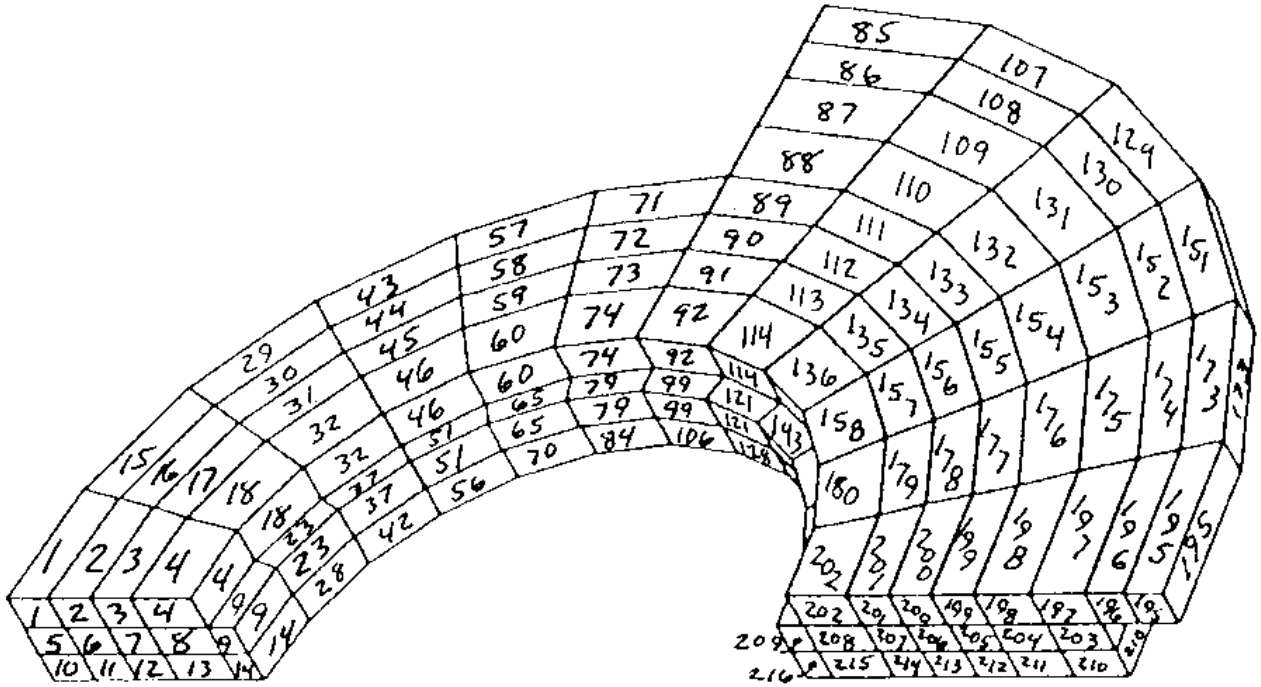

Figure A2-21
Substructure No. 2 – Element Numbers

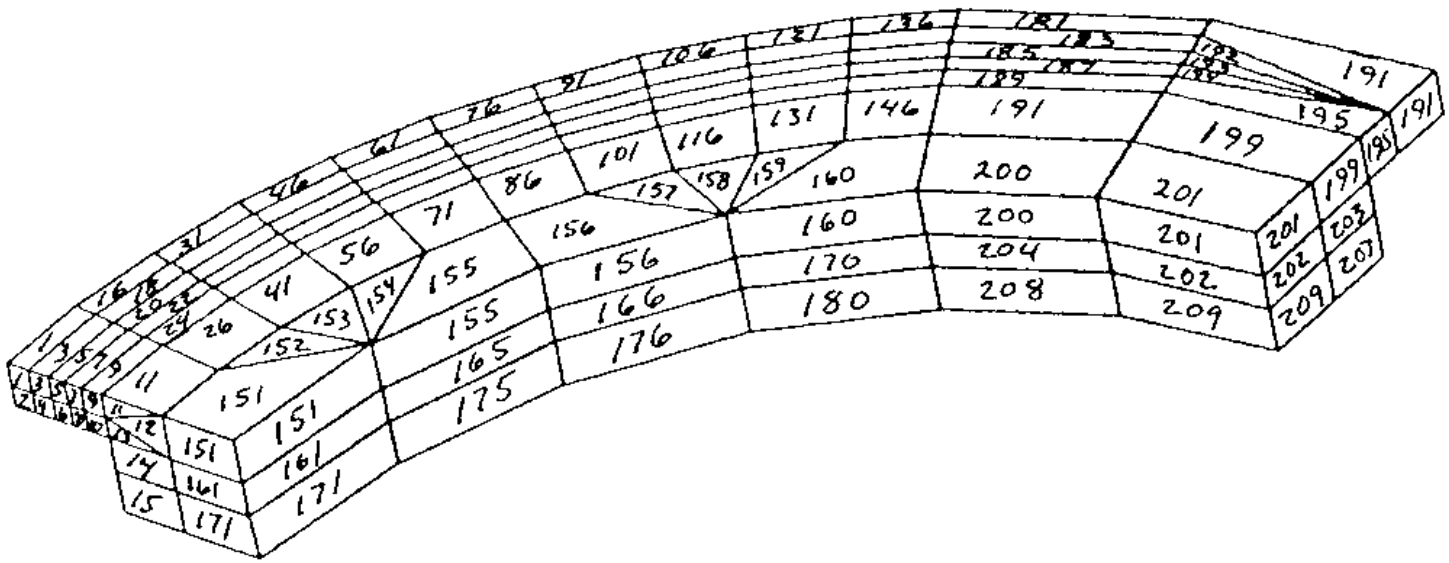

Figure A2-22
Substructure No. 3 – Element Numbers

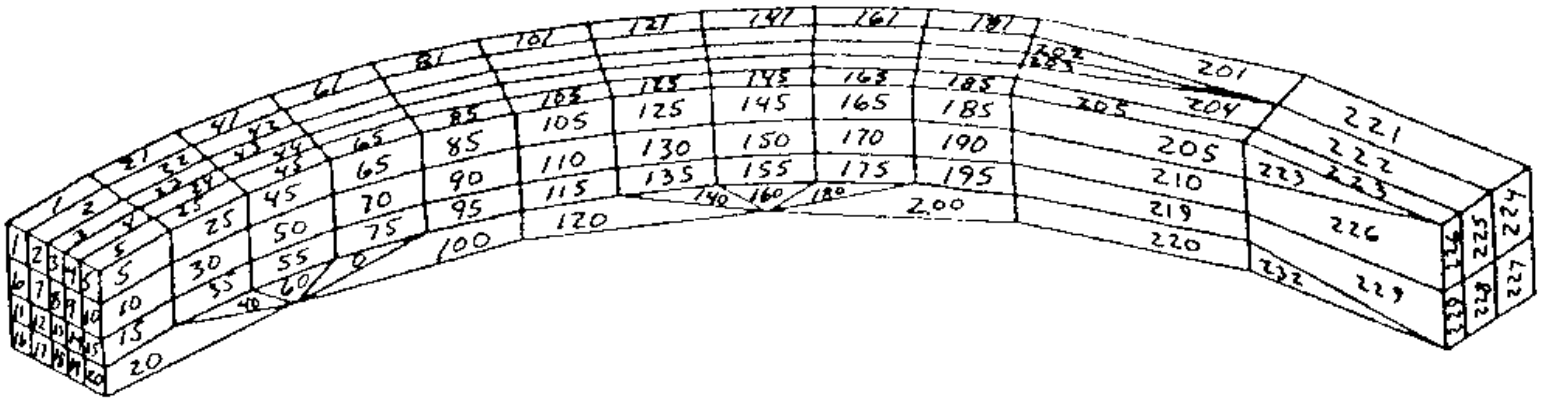

Figure A2-23

Substructure No. 4 – Element Numbers

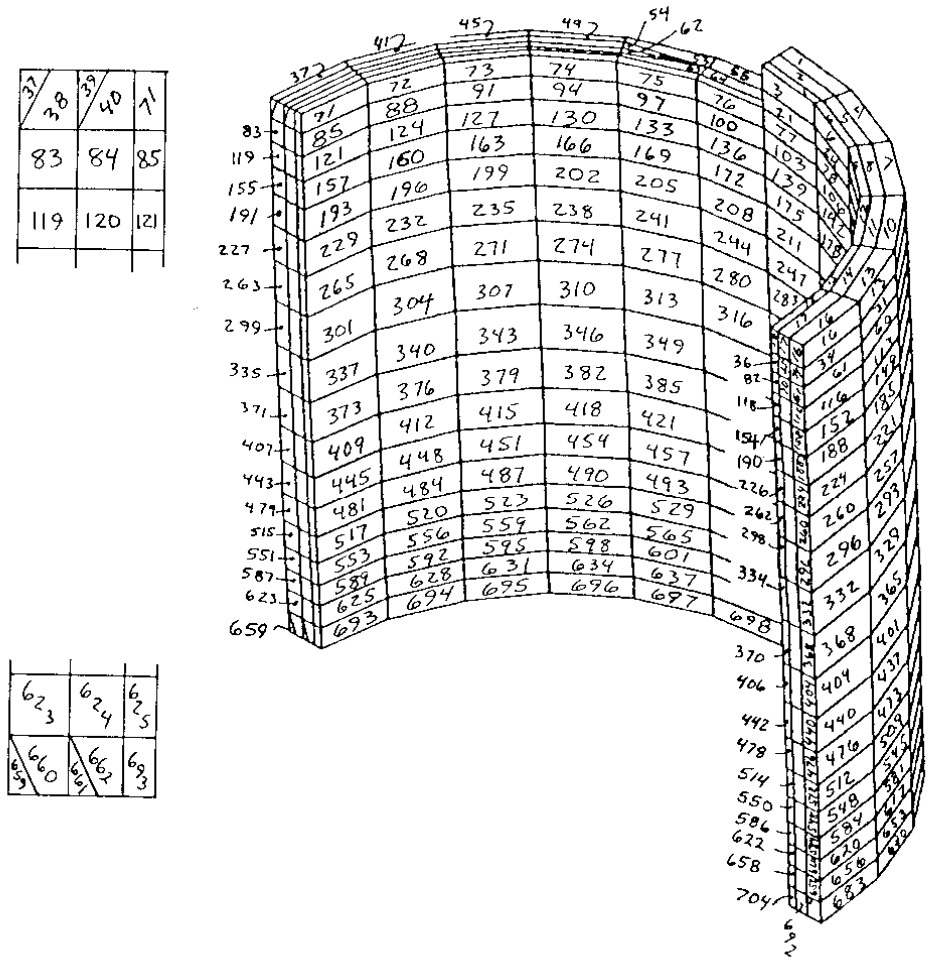

Figure A2-24
Substructure No. 5 – Element Numbers

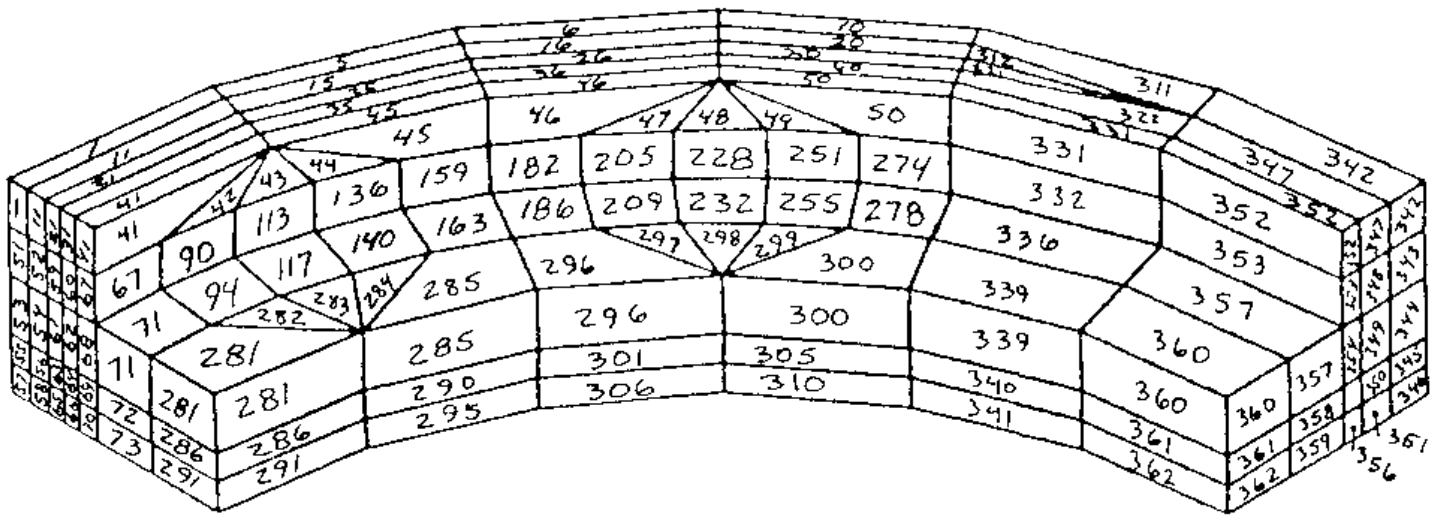

Figure A2-25

Substructure No. 6 – Element Numbers

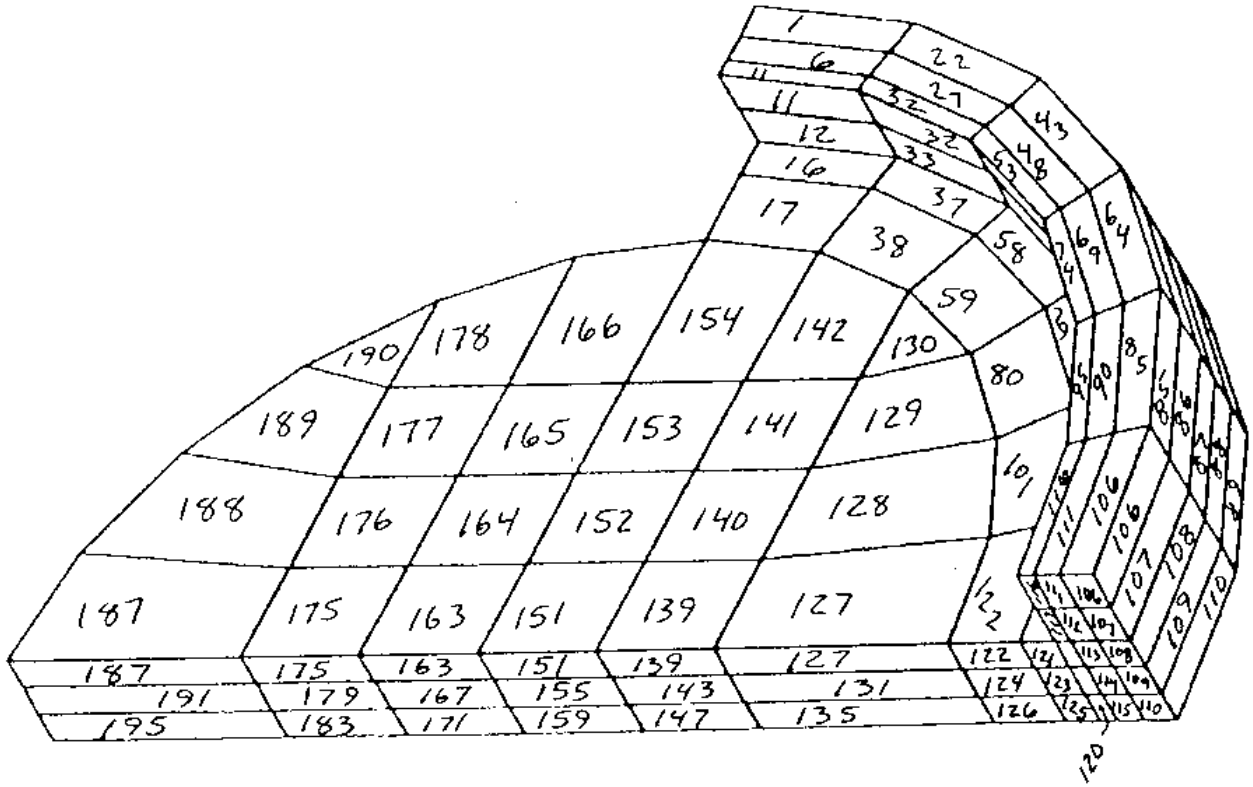

Figure A2-26
Substructure No. 7 – Element Number

2.10.2 Finite Element Model Internal Constraints

The connections between various substructures were made by node coupling. Those substructures that consisted of a part of the cask component (Primary Lid, Shells, Base Plate) were connected in all degrees-of-freedom at the interface nodes. The bolted connection between the secondary and primary lid and between the primary lid and the bolting ring were made by coupling the nodes in three translational directions at the location of each bolt.

Since lead bonding between the steel shells is not present, the elements representing the steel shell and lead were allowed to have relative motion with respect to each other along tangential and axial directions. They were coupled in the radial direction. On the two ends, the lead nodes were coupled with the upper ring or base plate in all directions (if the lead had tendency to move towards them), and were kept open (if the lead moved away from them). Figure A2-27 illustrates the internal constraints used to couple the substructures together.

2.10.2.3 Finite Element Model Boundary Conditions

As described earlier, only one-half of the cask geometry was modeled in the finite element model. This required the symmetry boundary conditions be used on the plane that divides the cask into two halves. Also, for a static finite element structural analysis it is required that the structure be restrained in such a way so that there is no rigid body motion of the structure. For the drop analyses the dynamic equilibrium problem is solved using D'Alembert's Principle i.e., the total

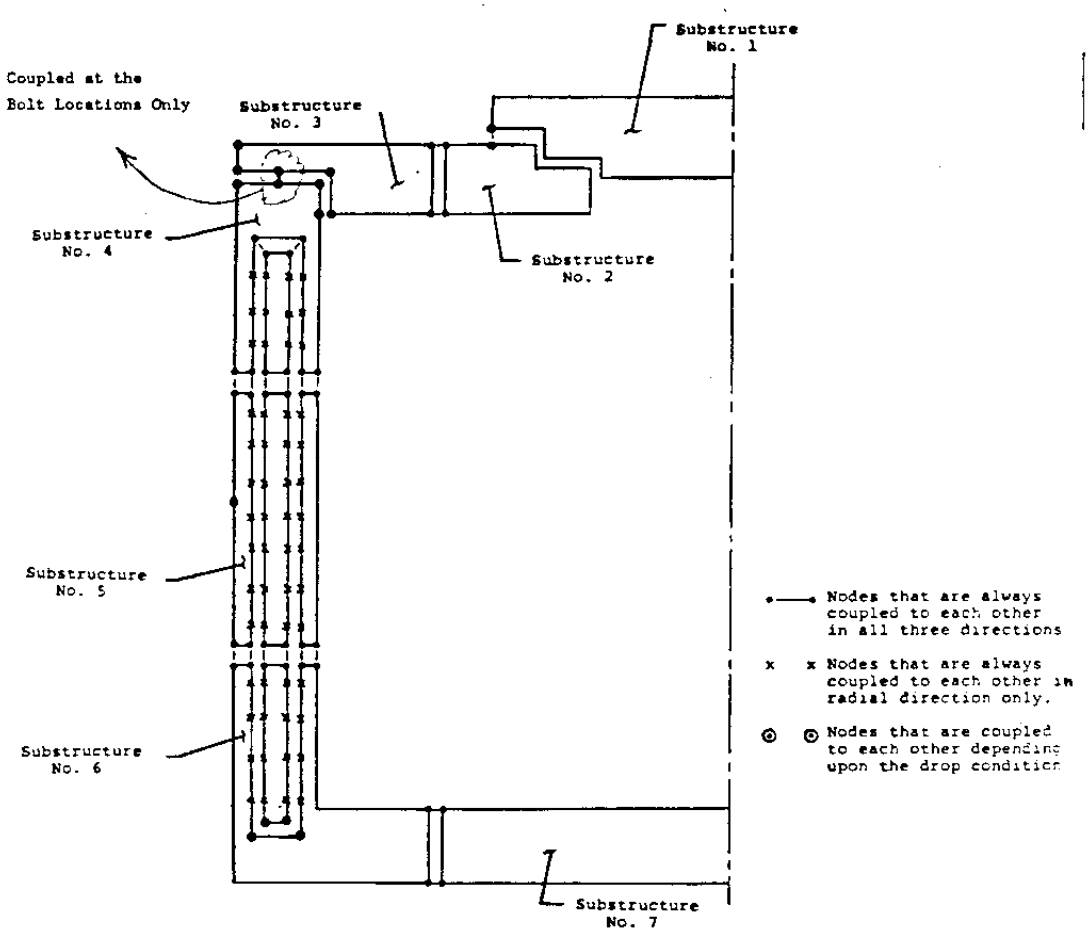

Figure A2-27

Internal Constraints Used in ANSYS Drop Analyses

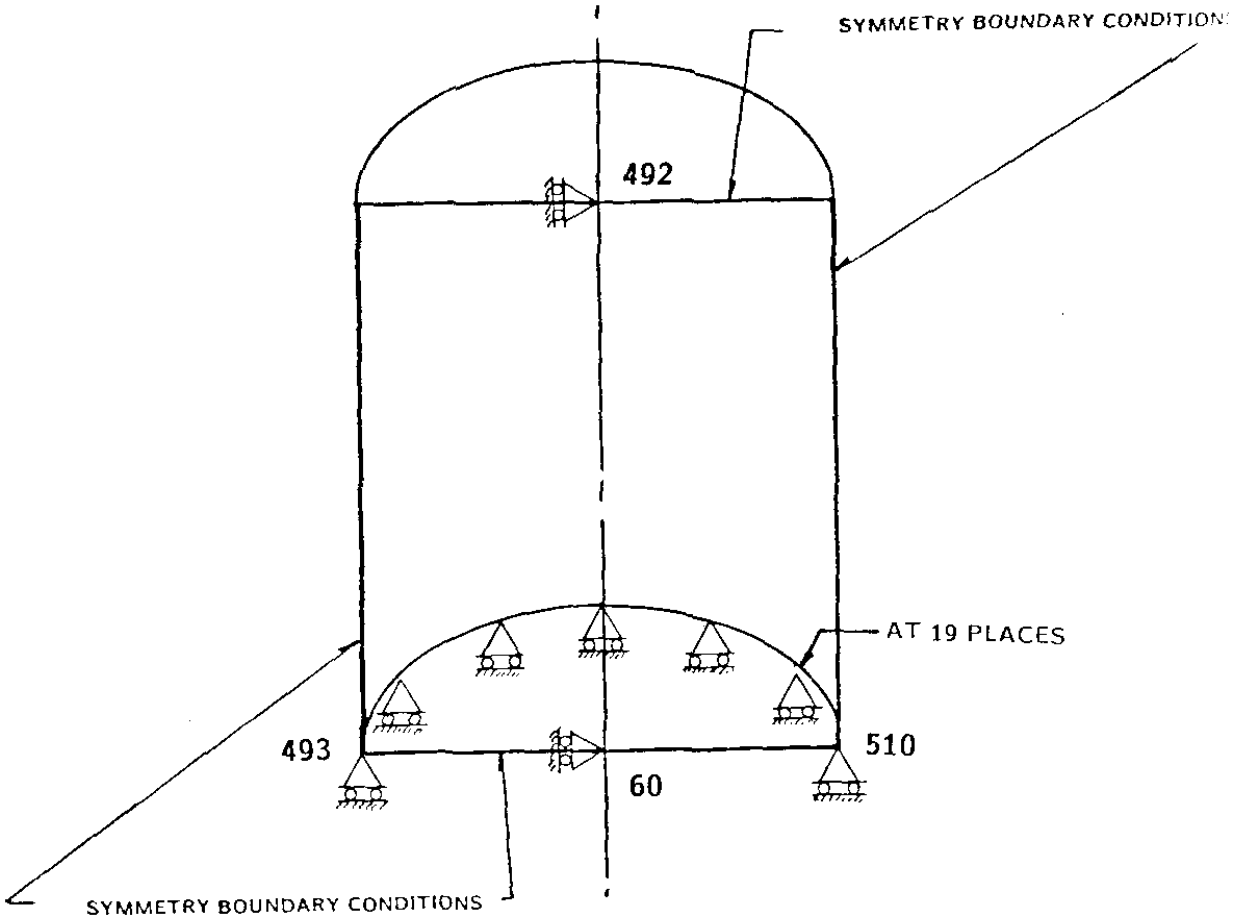

Figure A2-28

Boundary Conditions – End Drop

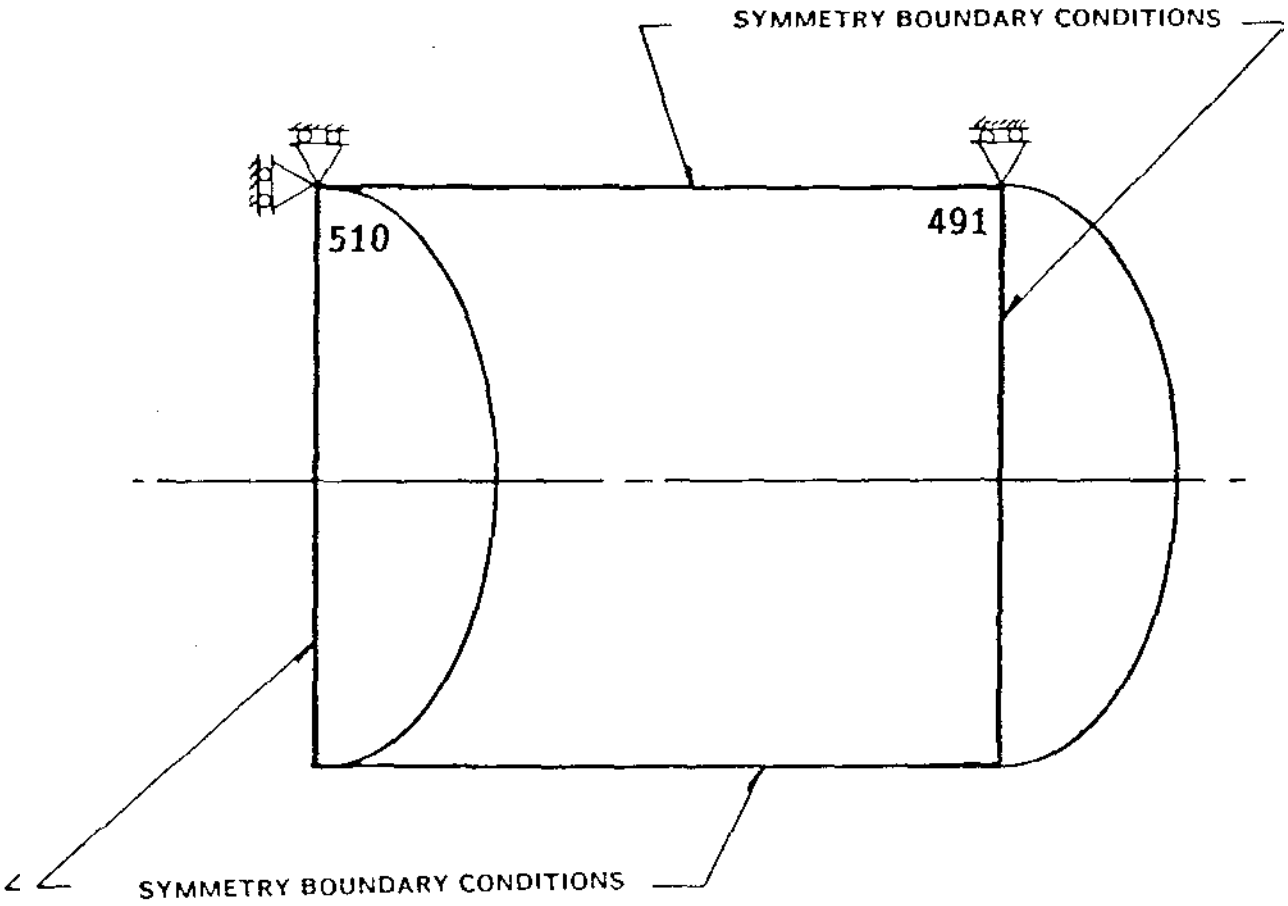

Figure A2-29

Boundary Conditions – Side Drop

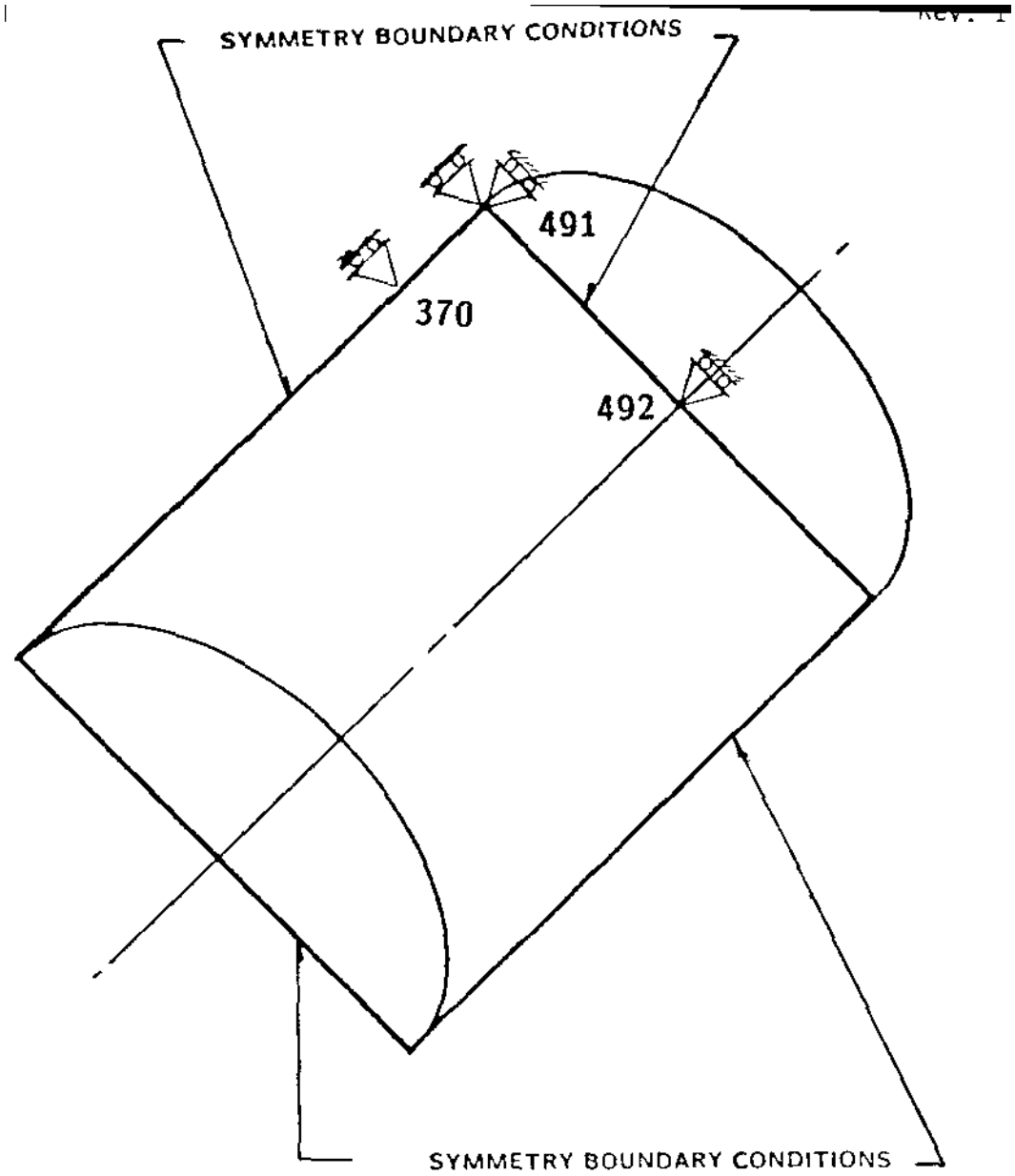

Figure A2-30

Boundary Conditions – Corner Drop

Inertia is balanced with the total reaction forces. In this case there are no physical locations in the structure that are stationary and a rigid body motion may occur. To eliminate this problem, the cask was restrained in such a way that the rigid body motion was removed. The displacement solution was obtained with respect to the restrained nodes. A small reaction at the restrained node assures that the displacement and stress pattern in the cask due to these restraints do not alter the results significantly.

Figures A2-28 to A2-30 show the boundary conditions used for end, side and corner drops, respectively. Tables A2-3 to A2-5 tabulate the constraint reactions at the restrained nodes for the end, side and corn drops respectively.

2.10.2.4 Finite Element Model Solution Techniques

The ANSYS finite element analysis of structural problems using substructures utilizes the technique of matrix condensation. The ANSYS Theoretical Manual (Reference 19) describes this technique in detail. In short, it can be described as follows:

The equilibrium of an eplastic structure in terms of discretized nodal displacement can be written as:

$$[K]\ \langle U\rangle = \langle F\rangle \qquad \text{eqn. (1)}$$

Where $[K]$ = stiffness matrix

$\langle U\rangle$ = displacement vector

$\langle F\rangle$ = load vector

The displacement vector U is separated out into essential and nonessential nodal displacement such that:

$$\langle U\rangle = \begin{Bmatrix} \langle Um\rangle \\ \langle Us\rangle \end{Bmatrix}$$

Table A2-3
Constraint Reactions – 30' End Drop

***** REACTION FORCES ***** TIME = 0.00000 LOAD STEP= 1 ITERATION= 1 CUM. ITER.= 1

NOTE - REACTION FORCES ARE IN THE NODAL COORDINATE SYSTEM

NODE	FX	FY	FZ
60	-0.204149		
151			18215.2
492	0.603040E-01		
493			6715.17
494			13709.9
495			15883.3
496			21808.0
497			32769.6
498			21961.0
499			-38198.6
500			-67255.8
501			-66216.1
502			-35642.8
503			39711.8
504			43595.0
505			7133.42
506			503.538
507			-2727.94
508			-5128.98
509			-6502.55
510			-3532.80
TOTAL	-0.143845	0.000000	-3199.53

NOTE: THE NODE NUMBERS LISTED ABOVE ARE NODE NUMBERS FOR REDUCED MODEL. THE FOLLOWING TABLE GIVES THE CORRESPONDING SUBSTRUCTURE NODE NUMBERS.

TRANSFORMED NODE NO.	SUBSTR. NODE NO.	SUBSTR. NO.	TRANSFORMED NODE NO.	SUBSTR. NODE NO.	SUBSTR. NO.
60	105	1	500	8	3
151	7	2	501	9	3
151	16	3	502	10	3
492	1044	7	503	11	3
493	1	3	504	12	3
494	2	3	505	8	2
495	3	3	506	9	2
496	4	3	507	10	2
497	5	3	508	11	2
498	6	3	509	12	2
499	7	3	510	13	2

Table A2-4
Constraint Reactions – 30' Side Drop

***** REACTION FORCES ***** TIME = 0.00000 LOAD STEP= 1 ITERATION= 1 CUM. ITER.= 1

NOTE - REACTION FORCES ARE IN THE NODAL COORDINATE SYSTEM

NODE	FX	FY	FZ
491	6400.94		
510	-7406.35		-273.015
TOTAL	-1005.41	0.000000	-273.015

NOTE: THE NODE NUMBERS LISTED ABOVE ARE NODE NUMBERS FOR REDUCED MODEL. THE FOLLOWING TABLE GIVES THE CORRESPONDING SUBSTRUCTURE NODE NUMBERS.

TRANSFORMED NODE NO.	SUBSTR. NODE NO.	SUBSTR. NO.	TRANSFORMED NODE NO.	SUBSTR. NODE NO.	SUBSTR. NO.
491	513	7	510	13	2

Table A2-5
Constraint Reactions – 30' Corner Drop

***** REACTION FORCES ***** TIME = 0.00000 LOAD STEP= 1 ITERATION= 1 CUM. ITER.= 1

NOTE - REACTION FORCES ARE IN THE NODAL COORDINATE SYSTEM

NODE	FX	FY	FZ
370	-4697.81		
491	7439.21		54577.6
492			-62047.8
TOTAL	2741.40	0.000000	-7470.23

NOTE: THE NODE NUMBERS LISTED ABOVE ARE NODE NUMBERS FOR REDUCED MODEL. THE FOLLOWING TABLE GIVES THE CORRESPONDING SUBSTRUCTURE NODE NUMBERS.

TRANSFORMED NODE NO.	SUBSTR. NODE NO.	SUBSTR. NO.	TRANSFORMED NODE NO.	SUBSTR. NODE NO.	SUBSTR. NO.
370	2013	5	491	513	7
370	13	7	492	1044	7

Where <Um> = displacement vector with essential or mast degrees-of-freedom.

<Us> = displacement vector with nonessential or slave degrees-of-freedom

then, eqn. (1) can then be reduced to

$$[\underline{K}] \quad \langle Um \rangle = \langle \underline{F} \rangle \qquad \text{eqn (2)}$$

where $[\underline{K}]$ = reduced stiffness matrix

$\langle \underline{F} \rangle$ = reduced load vector

Solution of this set of simultaneous equations represented by eqn. (2) gives the displacement at the essential nodes. A back substitution scheme provides the total solution of the set of simultaneous equations represented by eqn. (1). The nodal forces and element stresses are obtained using these displacements.

The total solution of a particular drop analysis requires performing the following steps:

- Stiffness matrix and load vector formulation of each substructure
- Solution of reduced equilibrium equations.
- Load and stress solution for each substructure.

In using ANSYS, some restrictions and limitations have to be considered in performing the above tasks. The flow diagrams shown in Figure A2-31 to A2-35 illustrate the sequence of computation and data saving scheme that was used in performing the drop analysis of the 10-160B cask.

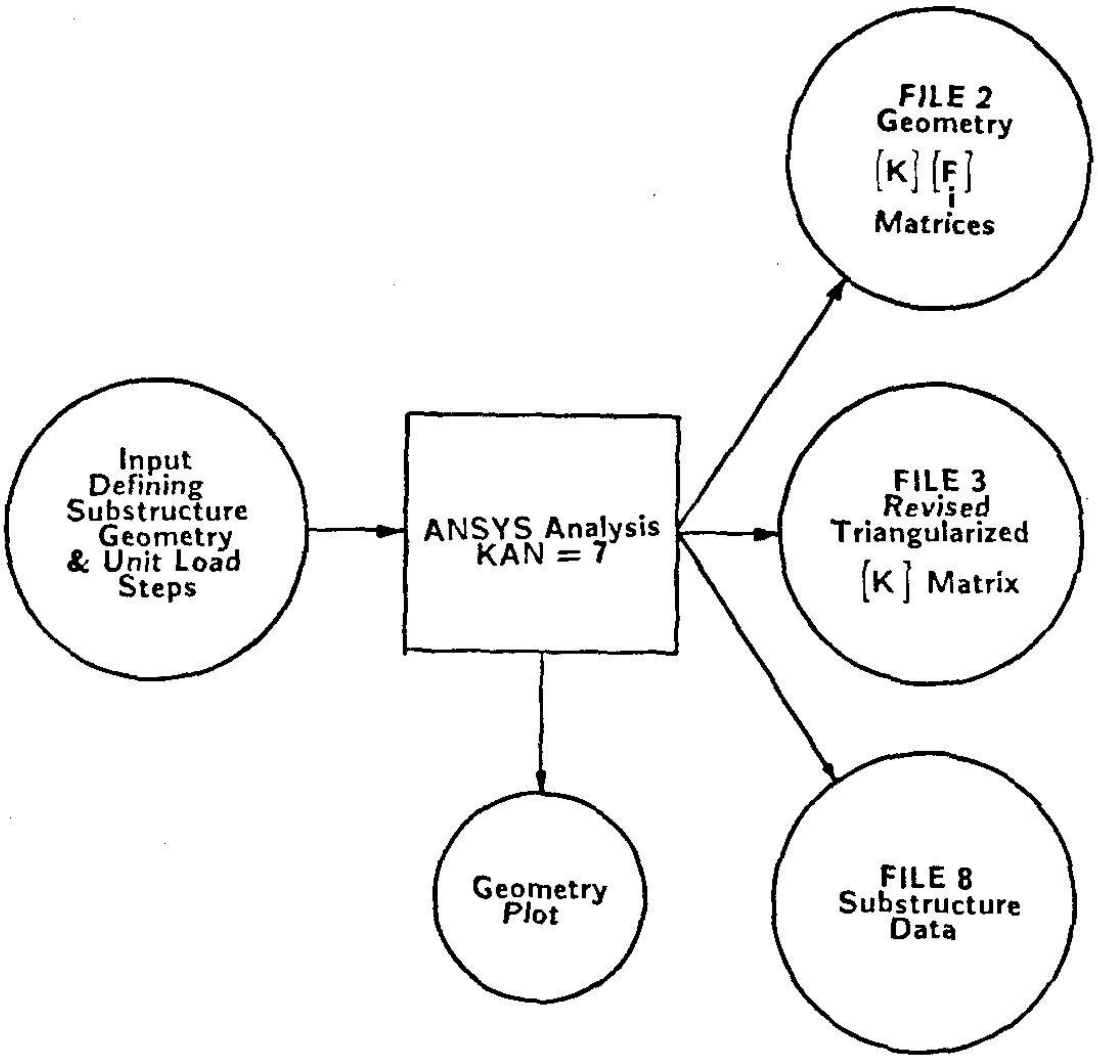

Note: This step is repeated for each substructure.

Figure A2-31

Flow Diagram – Substructure Generation Analysis

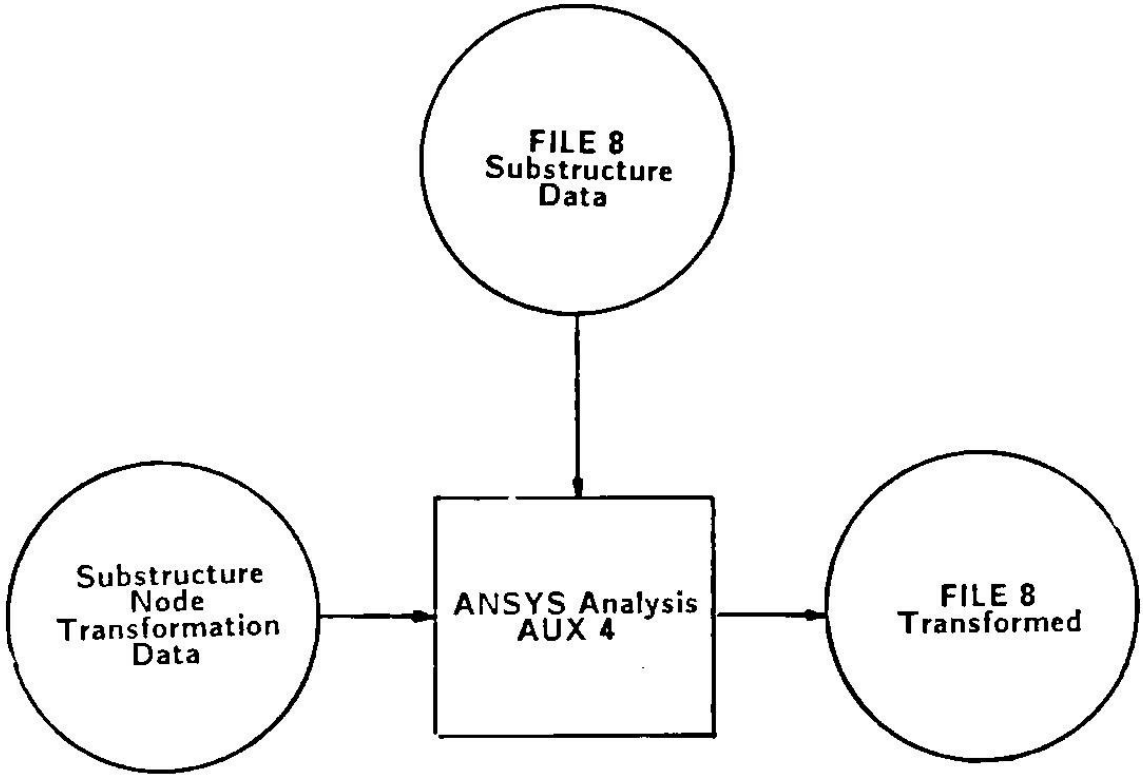

Note: This step is repeated for each substructure.

Figure A2-32

Flow Diagram – Substructure Node No. Transformation

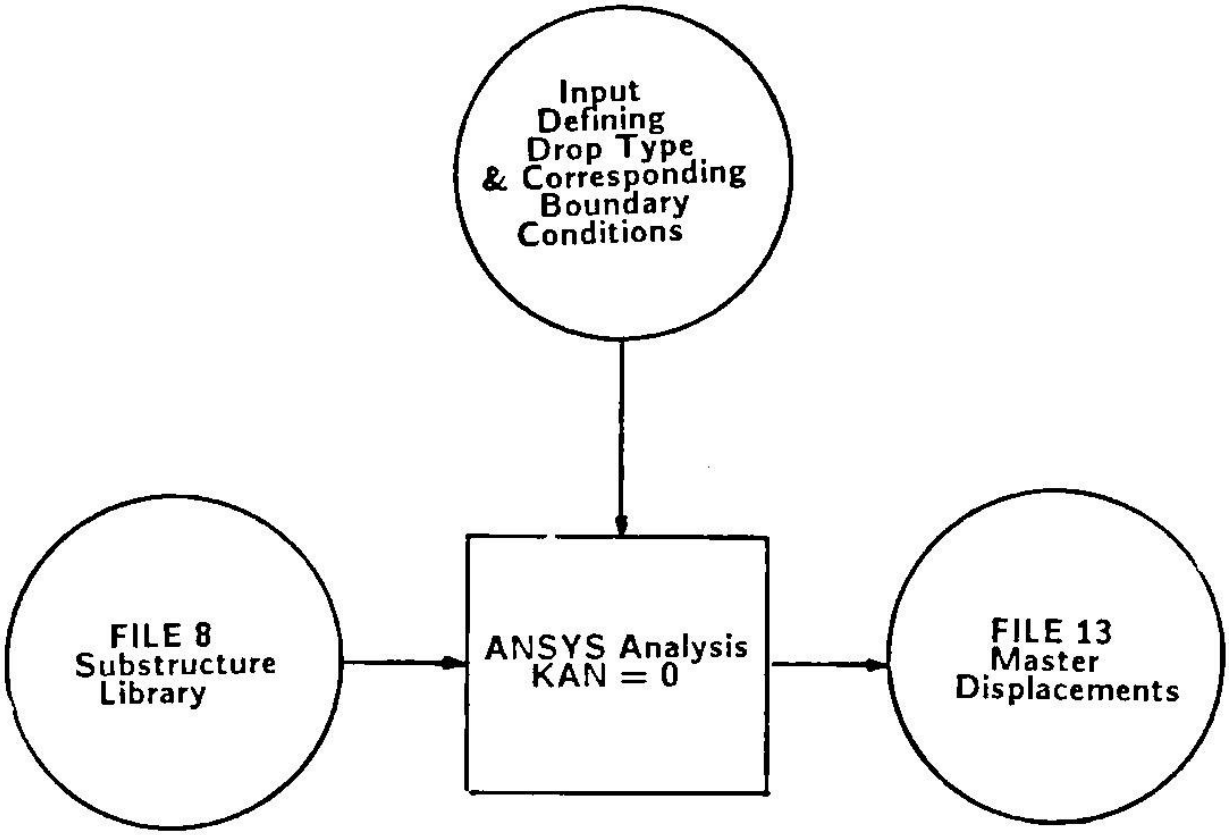

Figure A2-33

Flow Diagram – Cask Drop Analysis

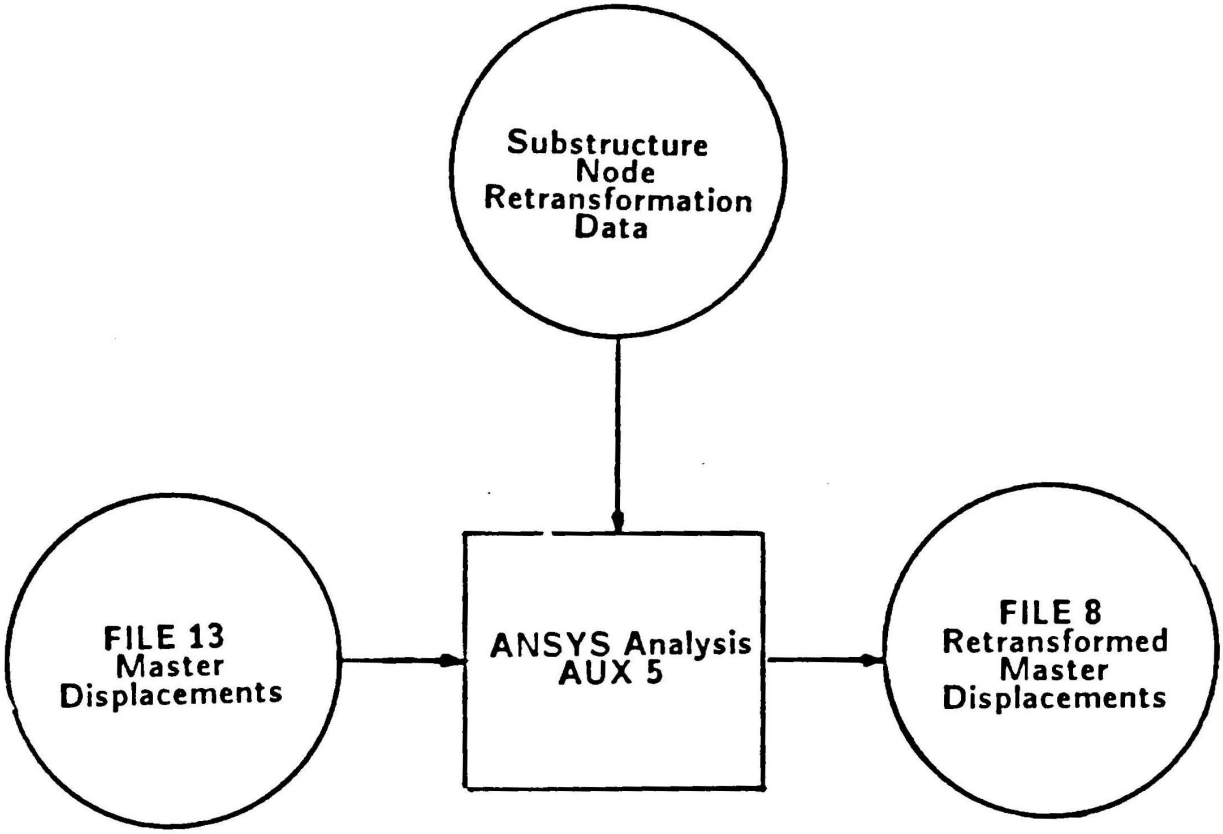

Note: This step is repeated for each substructure.

Figure A2-34

Flow Diagram – Substructure Node No. Retransformation

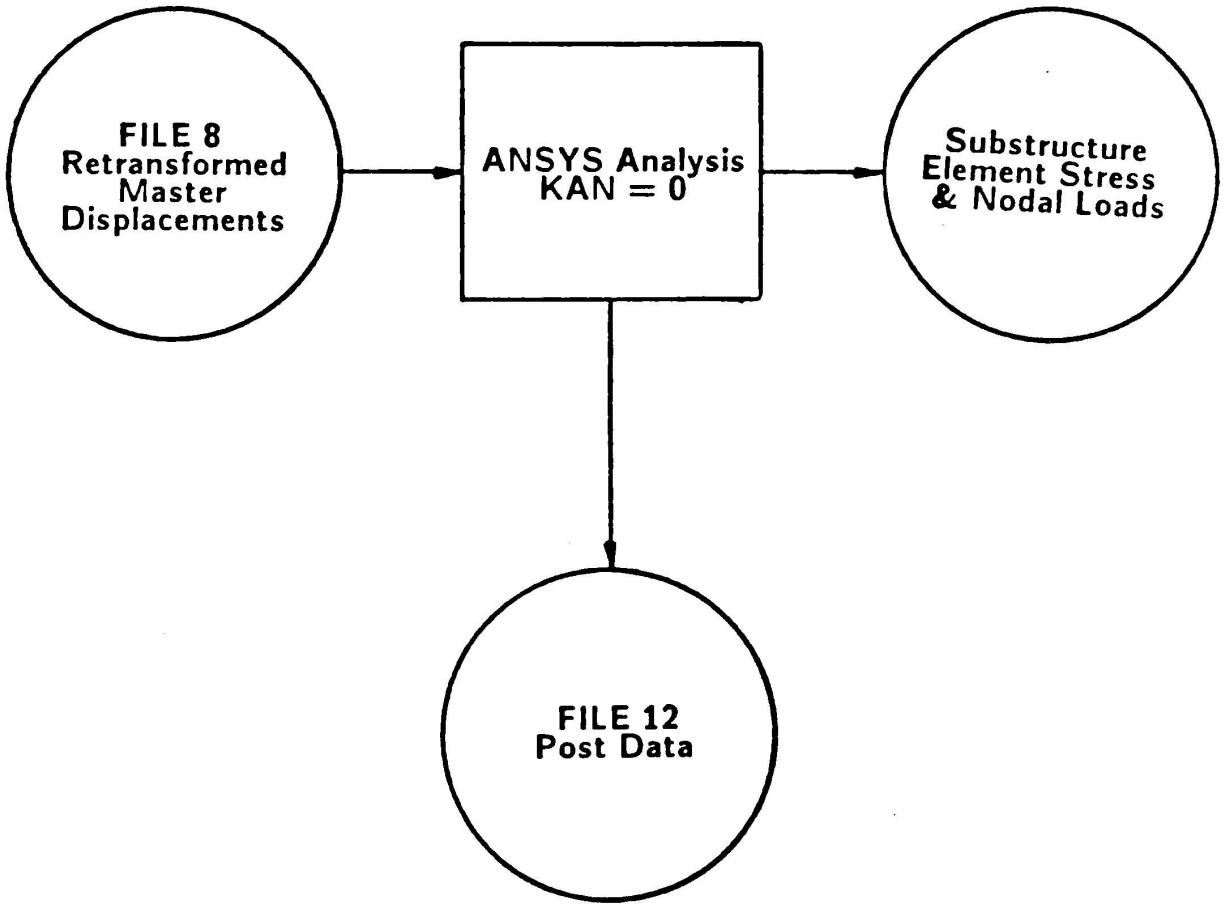

Note: This step is repeated for each substructure.

Figure A2-35

Flow Diagram – Substructure Stress Pass

2.10.2.5 Loading

For a particular drop condition, the cask is in equilibrium under the influence of the reaction of the impact limiter crush plane load, described in Section 2.10.1.1. and the inertia load of the cask body mass, payload mass and the nonstriking impact limiter mass.

The applied load in each case (end, side and corner) are different. Figures A2-36 to A2-38 show these loads graphically and Table A2-6 summarizes them for a quick reference. A detailed description of the applied loading is given in the following paragraphs.

(a) End Drop

The end drop crush plane forces were applied as a uniform element surface pressure over the end of the cask in bearing contact with the impact limiter (as depicted in Figure A2-36). The cask body inertia was applied as the body force. The payload inertia was applied as a uniform element surface pressure over the entire inner surface of the two lids (primary and secondary). The non-striking impact limiter inertia was applied as a uniform pressure over the annulus formed by the impact limiter on the base plate. The magnitudes of these loadings were obtained from Reference 20.

(b) Side Drop

The side drop crush plane load intensity (as listed in Table A2-7) varies in circumferential direction in such a way that its maximum value occurs along a vertical plane normal to the impact plane, decreases along the circumference and diminishes at an angle of 33 degrees. This load intensity was converted to forces on cask nodes that lie on the crush plane. A uniform distribution along the axial direction was assumed. This is conservative because in actuality, due to larger stiffness of the ends, a proportionately large load will follow the path through the ends, This results in a

Table A2-6

Summary of Distribution of Various Loading Over the Cask Components Under Different Drop Conditions

Drop Condition	Loading Component	Distribution
30' End Drop (Upper End Down) Ref. A2-36	Cask Inertia	Over entire cask mass
	Non-striking Impact Limiter Inertia	Uniformly on the base plate over the area under the non-striking impact limiter.
	Payload Inertia	On the primary and secondary lids, uniformly over the entire inner surface
	Striking Impact Limiter Reaction	On the primary lid, uniformly over the area under the striking impact limiter
30' Side Drop Ref. Figure A2-37	Cask Inertia	Over entire cask mass.
	Payload Inertia	On the lower half of the cask body, varying sinusoidally along the circumference, uniform along the length of the cask.
	Impact Limiter	On the base plate, primary lid and portion Reaction of cask body under impact limiters, varying along the circumference according to the nature obtained from the cask drop program, uniform along the length of the cask.
30' Corner Drop (Upper End Drop) Ref. Fig. A2-38	Cask Inertia	Over entire cask mass
	Payload Inertia	On the primary and Secondary lids, uniformly over the entire surface and on the lower half of the cask body, varying sinusoidally along, the circumference, uniform along length of the cask.
	Non-Striking Impact Limiter Inertia	On the base plate outside corner, uniformly along the circumference.
	Striking Impact	On the primary lid and portion of cask body
	Limiter Reaction	Under the impact limiter, according to the variation along circumferencial and longitudinal directions as obtained from the cask drop program.

Table A2-7

Side Drops Crush Planes Forces

02-01-1985 15:23:46
FORCE DISTRIBUTION: SIDE DROP, BOTTOM
CASK 50ROWT
FORCE
STRESS

J	X(J)	FI(J)	FIH(J)	SIG(J)	SIG.H(J)
2	1.748	244493.	159749.	3040.	2174.
3	4.219	98436.	65815.	2961.	2167.
4	5.496	73549.	50206.	2889.	2158.
5	6.515	60338.	42106.	2816.	2151.
6	7.391	51758.	36904.	2747.	2144.
7	8.170	46092.	33190.	2710.	2136.
8	8.879	41743.	30341.	2674.	2127.
9	9.534	38257.	28093.	2638.	2120.
10	10.145	35373.	26247.	2601.	2113.
11	10.719	32930.	24694.	2565.	2105.
12	11.263	30822.	23363.	2529.	2098.
13	11.781	29013.	22204.	2496.	2091.
14	12.276	27372.	21184.	2460.	2083.
15	12.750	25902.	20274.	2423.	2076.
16	13.206	24607.	19457.	2390.	2069.
17	13.646	23395.	18731.	2354.	2063.
18	14.071	22315.	18056.	2321.	2056.
19	14.483	21321.	17438.	2288.	2048.
20	14.882	20386.	16880.	2254.	2042.
21	15.270	19690.	16352.	2239.	2035.
22	15.647	19042.	15811.	2224.	2021.
23	16.015	18437.	15326.	2210.	2010.
24	16.373	17869.	14851.	2195.	1996.
25	16.723	17335.	14424.	2180.	1985.
26	17.065	16832.	13944.	2166.	1963.
27	17.399	16356.	13489.	2151.	1941.
28	17.727	15904.	12982.	2136.	1908.
29	18.047	15476.	12280.	2122.	1842.
30	18.361	15078.	11500.	2108.	1760.
31	18.669	14689.	11000.	2094.	1716.
32	18.971	14328.	10520.	2080.	1672.
33	19.268	13972.	9924.	2066.	1606.
34	19.560	13641.	9217.	2053.	1518.
35	19.846	13314.	8536.	2038.	1430.
36	20.128	12952.	7749.	2016.	1320.
37	20.405	12587.	6989.	1991.	1210.
38	20.678	12149.	6360.	1952.	1119.
39	20.946	11390.	5449.	1859.	973.
40	21.211	10422.	4567.	1727.	828.
41	21.471	9550.	3908.	1606.	719.
42	21.728	8220.	3075.	1402.	574.
43	21.981	6674.	2456.	1155.	465.
44	22.231	4720.	1787.	828.	343.
45	22.477	2820.	881.	502.	172.

Note (1) See Attachment 1 for the detail output of caskdrop.

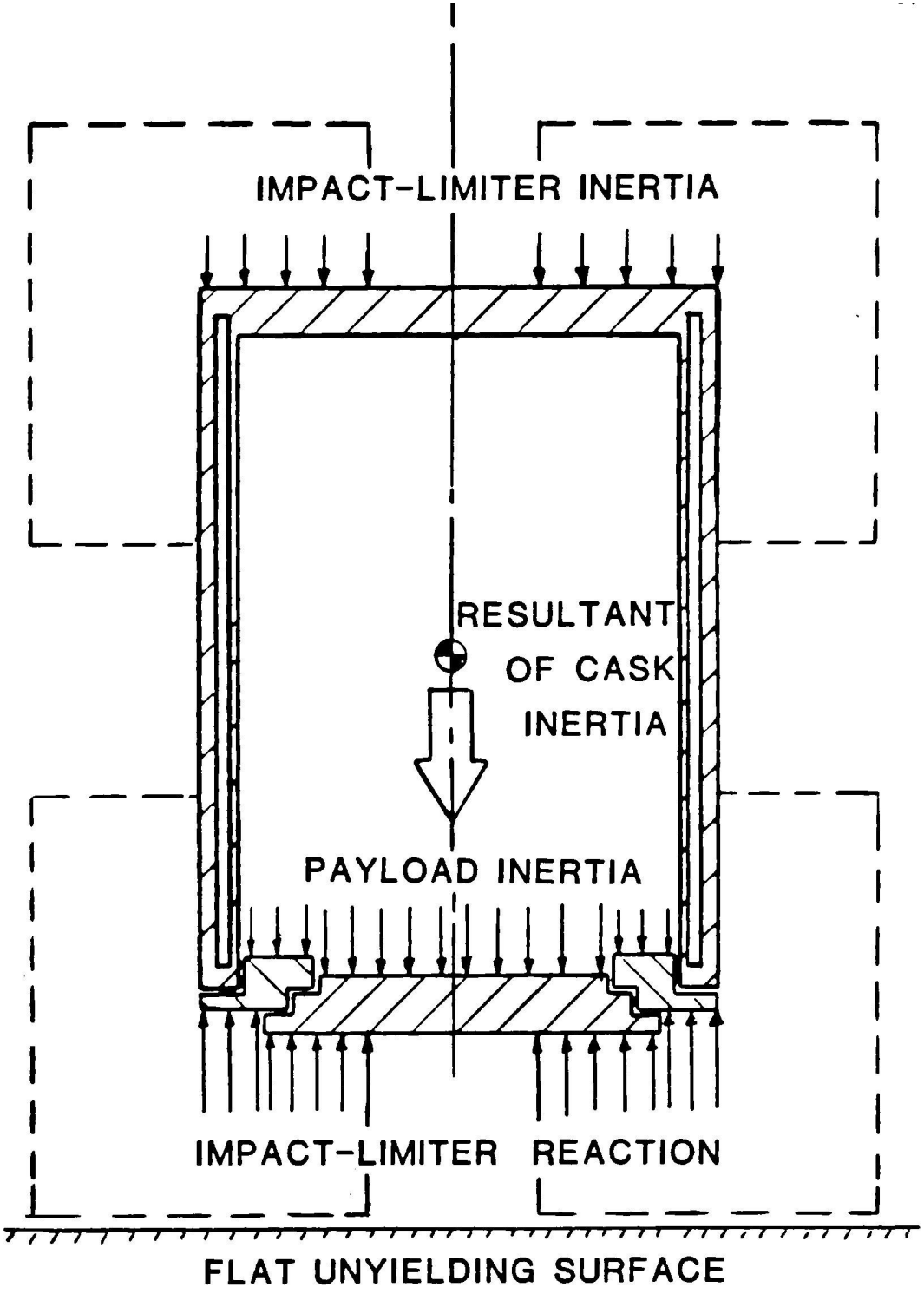

Figure A2-36

Load Distribution – End Drop

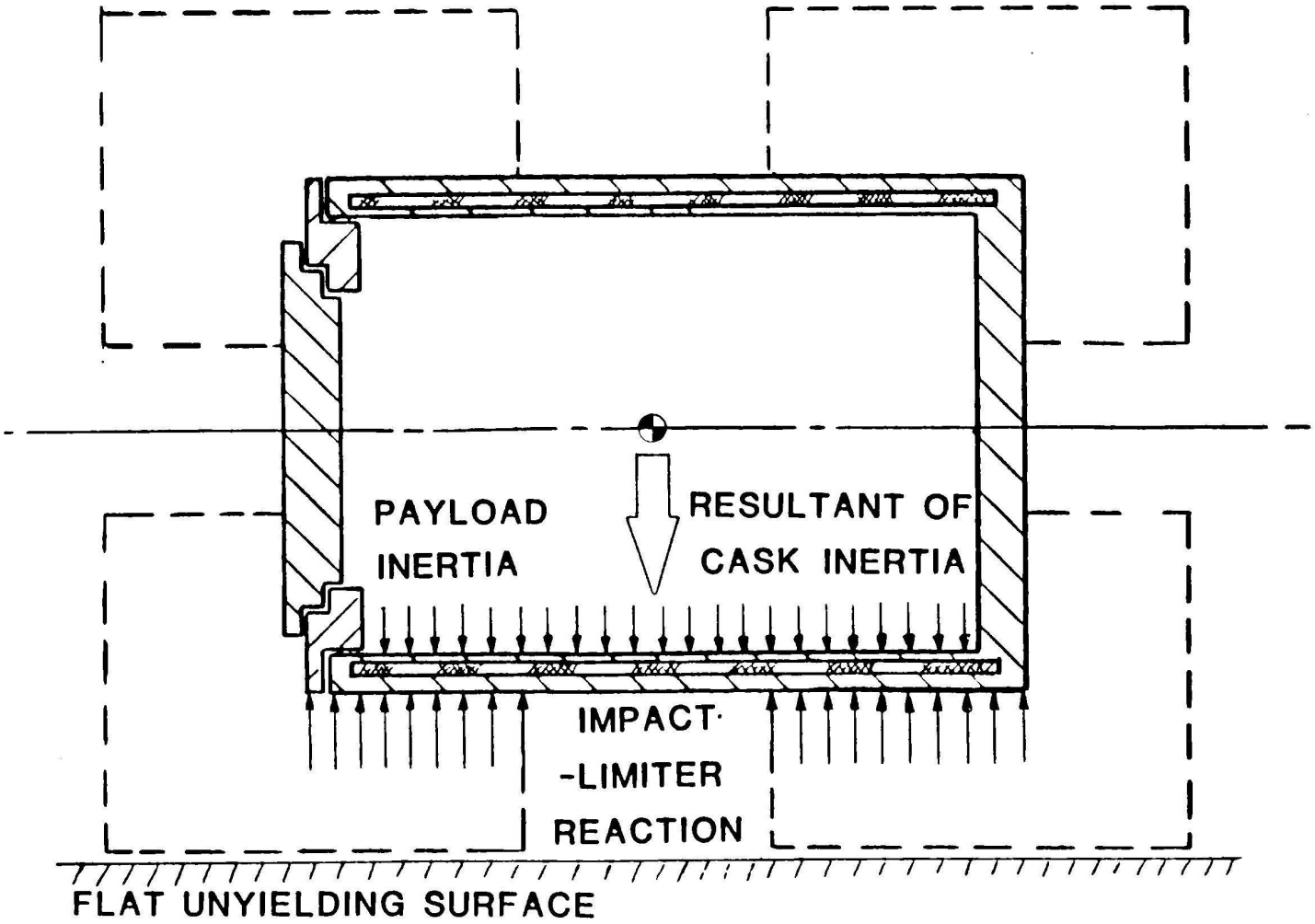

Figure A2-37

Load Distribution – Side Drop

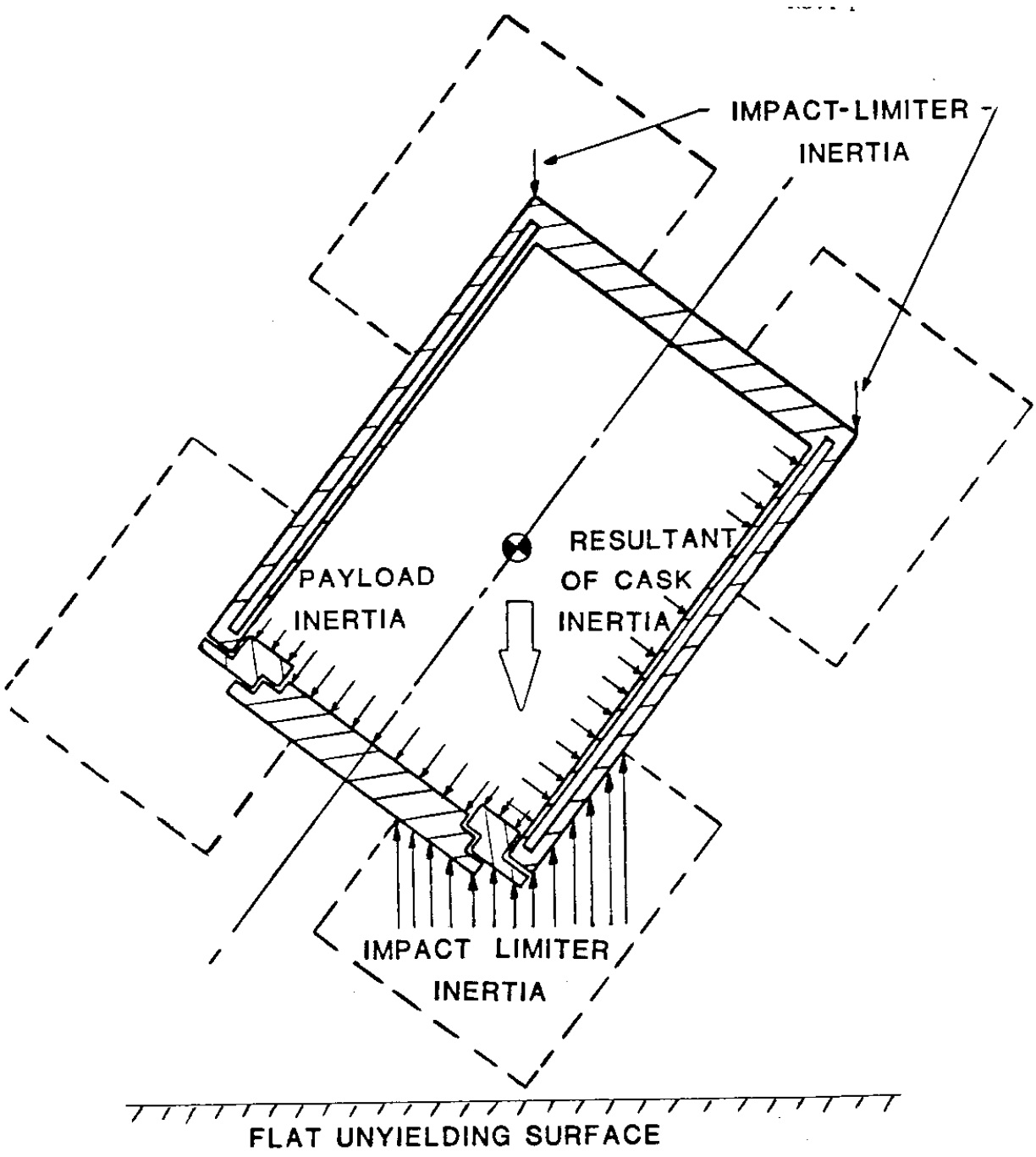

Figure A2-38

Load Distribution – Corner Drop

smaller bending moment at the ends than those obtained from the assumption of uniform distribution along the axial direction. The payload inertia was applied as nodal forces from a load intensity distribution. They were applied sinusoidally along the circumference and uniformly along the axial direction. They were applied at nodes on the lower half of the inside surface of the inner shell. The cask inertia was applied as the body force. The magnitudes of these loading were obtained from Reference 21. Figure A2-37 graphically depicts these loadings.

(c) Corner Drop

The corner drop crush plane load, as listed in Table A2-8, vary along both circumferential and axial directions. These loads were used to obtain the corresponding values at the cask model crush plane nodes. They were applied as the nodal loads in the analysis. The cask inertia was applied as a body force. The payload inertia was resolved into two mutually perpendicular directions (one along the axis of the cask and the other perpendicular to it). The component along the axial direction was distributed uniformly over the inside surface of the primary and secondary lids. The other component was distributed over the lower half of the inside surface of the inner shell. The inertia of the nonstriking impact limiter was distributed as a line load over the outer edge of the base plate. The magnitude of these loadings were obtained from Reference 22. Figure A2-38 graphically depicts these loading.

There are certain requirements for an ANSYS model using ANSYS structure analysis using substructures. The loadings were applied as a linear combination of load vectors corresponding to each substructure. Various unit load vectors were generated for each substructure. The three drop analyses were performed using a combination of these load vectors which are listed in Table A2-9.

TABLE A2-8

CORNER DROPS CRUSH PLANES FORCES[1]

	X-POSITION														
Y	-21.758	-17.987	-14.215	-10.443	-6.672	-2.900	.872	4.643	8.415	12.186	.000	.000	.000	.000	.000
.000	0.	0.	0.	30922.	36629.	51758.	71350.	33206.	25064.	0.	0.	0.	0.	0.	0.
3.188	0.	0.	0.	30922.	36629.	51758.	70189.	32758.	24909.	0.	0.	0.	0.	0.	0.
6.375	0.	0.	0.	30922.	36629.	51758.	66580.	31634.	24428.	0.	0.	0.	0.	0.	0.
9.563	0.	0.	0.	30922.	36629.	51758.	60577.	29782.	20584.	0.	0.	0.	0.	0.	0.
12.750	0.	0.	27061.	30922.	36629.	51758.	45456.	27231.	0.	0.	0.	0.	0.	0.	0.
15.938	0.	0.	27061.	30922.	36629.	51758.	34854.	25741.	0.	0.	0.	0.	0.	0.	0.
19.125	0.	25317.	27061.	30922.	36629.	50227.	29847.	23599.	0.	0.	0.	0.	0.	0.	0.
22.313	19689.	25317.	27061.	30922.	36629.	35690.	26249.	0.	0.	0.	0.	0.	0.	0.	0.
25.500	19689.	25317.	27061.	30922.	36629.	28777.	23298.	0.	0.	0.	0.	0.	0.	0.	0.
28.688	19689.	25317.	27061.	30922.	30946.	25206.	0.	0.	0.	0.	0.	0.	0.	0.	0.
31.875	19689.	25317.	27061.	29410.	25806.	0.	0.	0.	0.	0.	0.	0.	0.	0.	0.
35.063	19689.	25317.	26404.	25746.	5302.	0.	0.	0.	0.	0.	0.	0.	0.	0.	0.
38.250	17857.	24453.	24961.	0.	0.	0.	0.	0.	0.	0.	0.	0.	0.	0.	0.
41.438	0.	0.	0.	0.	0.	0.	0.	0.	0.	0.	0.	0.	0.	0.	0.
44.625	0.	0.	0.	0.	0.	0.	0.	0.	0.	0.	0.	0.	0.	0.	0.
47.813	0.	0.	0.	0.	0.	0.	0.	0.	0.	0.	0.	0.	0.	0.	0.

(1) These results, generated by CNSI CASKDROP Program, illustrate the loading profile on the cask body. See attachment 1 for the detail output of caskdrop.

TABLE A2-9

UNIT LOAD VECTORS USED FOR VARIOUS SUBSTRUCTURES

Substructure No.	Load Vector No.								
	1	2	3	4	5	6	7	8	9
1	a	b	c	f	j				
2	a	b	c	f	-	g	i	j	
3	a	b	c	d	f	-	g	i	j
4	a	b	c	d	e	i	j		
5	a	b	c	d	e	i	j		
6	a	b	c	d	e	h	j	k	
7	a	b	c	h	k				

Symbols Used:

a – 100 g acceleration loading in global x-direction

b – 100 g acceleration loading in global y-direction

c – 100 g acceleration loading in global z-direction

d – Side drop impact limiter reaction

e – Side drop payload inertia

f – End drop payload inertia

g – End drop impact limiter reaction

h – End drop impact limiter inertia

i – Corner drop impact limiter reaction

j – Corner drop payload inertia

k – Corner drop impact limiter inertia

2.10.2.6 Stress Linearization

The stresses obtained from the analyses of each drop case is comprised of stress components (normal and shear) along three global directions at the element centroid. Principal stresses and stress intensity are also available at the centroid of each element. A special ANSYS option permits printout of stress quantities at selected faces of an element. These print-outs were utilized in tabulation of stress intensities where a single element through the thickness of a component was used in the modeling. When more than one element was used, stress linearization was performed using the techniques of the ASME Boiler & Pressure Vessel Code Section III (Reference 23).

These are summarized as follows:

Mean and mane-plus-bending values of the stress components along meridianal, normal and hoop directions were obtained using the following scheme.

$$\sigma_m = \frac{1}{d} \sum_{i=1}^{N} \delta_i \, \sigma_i$$

$$\sigma_{m+b} = \sigma_m + \frac{6}{d^2} \left(\sum_{i=1}^{N} \delta_i \, \sigma_i \, X_i - \sigma_m \, x \, d^2 / 2. \right)$$

where

σ_m = Mean value of the stress component
σ_{m+b} = Mean-plus-bending value of the stress component
σ_i = Stress component at the centroid of i-th element
δ_i = Thickness of the i-th element
X_i = Distance of the centroid of the i-th element from the inside face

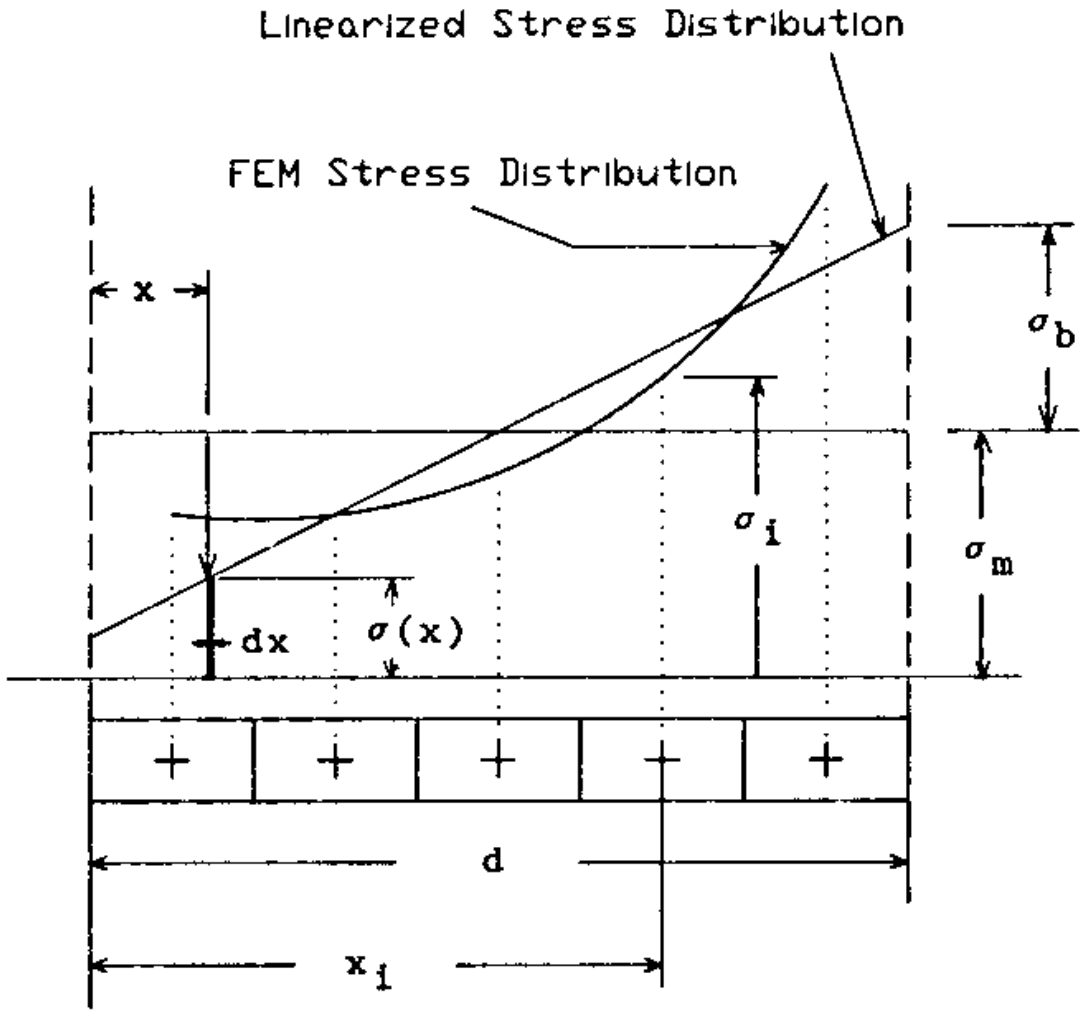

Figure A2-39

Linearization of Finite Element Stress Results

d = Total thickness of the section

N = No. of elements across the thickness

The linearized mean, P_L, and linearized mean plus bending, $P_L + P_b$, values of the stress intensities were calculated using the values of stress components obtained as described above.

Figure A2-39 shows graphically the concept of stress linearization.

2.10.3 Data Reduction of Cask Structural Computation Results

2.10.3.1 Results of 3-Dimensional Linear Model

As described under solution techniques, (2.10.2.4) reduced linear static analyses of each drop condition allows stress analysis of each substructure. The stress analysis pint-out consists of an enormous amount of data. To facilitate interpretation of this data, contour plots of stress intensities were obtained for each substructure and every drop orientation case. These plots are congested for a three-dimensional model. Therefore, magnified plots of stress contours in the high stress regions in isometric views were obtained and are shown in Figures 2-13 to 2-18. The largest linearized mean and mean plus bending stress intensities in every component were obtained using the methods described under stress linearization for each drop case. The component stresses, principal stresses and the stress intensities at the critical cross sections are presented in Tables A2-10, 11, 14, 15, 18 and 19 for various drop orientations. The combinations of the other load conditions with the drop condition loading per Regulatory Guide 7.8 is performed on the stress intensity basis and is presented in Tables A2-13, 17, 21, 23, 25 and 27.

2.10.3.2 Results of 2-Dimensional Nonlinear Model

for the analysis of load cases where the applied loading is axisymmetric (e.g. pressure loading, thermal loading and the fire accident loading), a 2-dimensional finite-element model of the cask (Figure A2-44.1) was constructed using axisymmetric isoparametric elements to represent the cask and the lead, 2-dimensional beam elements to represent the bolted connections, and 2-dimensional nonlinear interface elements to represent the lead-steel interfaces and the lid-body interfaces. The

TABLE A2-10
MEMBRANE STRESSES IN VARIOUS COMPONENTS OF THE CASK
END DROP (30-FOOT)[1]

Component	Location [2]	Stress Components				Principal Stresses			
		Normal Radial Psi	Normal Axial Psi	Norm Hoop Psi	In-plane psi	S1 psi	S2 psi	S3 psi	S.I. psi
Base plate	A	-511.9	41.27	-511.9	0	41.27	-511.9	-511.9	553.1
Outer Shell	B	-2234	-51.72	1834	88.62	1834	-48.13	-2237	4071
Inner Shell	C	-2993	-222	3758	-651	3758	-76.72	-3139	6897
Bolting Ring	D	-756.9	-5802	3219	-197.1	3219	-749.2	-5810	9028
Primary Lid	E	-241.1	-137.9	77.67	-2654	2456	77.67	-2845	5310
Secondary Lid	F	-654.7	-447.4	-654.7	0	-447.4	-654.7	-654.7	207.3

General Notes:
(1) See Table 2-1 for load information.
(2) See Figure A2-40 for locations indicated in this table.

TABLE A2-11
MEMBRANE PLUS BENDING STRESSES IN VARIOUS COMPONENTS OF THE CASK
END DROP (30-FOOT)[1]

Component	Location [2]	Stress Components				Principal Stresses			
		Normal Radial Psi	Normal Axial Psi	Norm Hoop Psi	In-plane psi	S1 psi	S2 psi	S3 psi	S.I. psi
Base plate	A	12280	-241.3	12280	0	12280	12280	-241.3	12520
	B	-13300	323.9	-13300	0	323.9	-13300	-13300	13630
Outer Shell	C	-353.4	-9029	-843.9	88.62	-352.5	-843.9	-9030	8677
	D	-2148	8769	4512	88.62	88.7	4512	-2149	10920
Inner Shell	E	-3535	-10430	646.2	-651	646.2	-3474	-10490	11130
	F	-2452	9871	6870	-651	9906	6870	-2486	12390
Bolting Ring	G	627.5	-3739	4497	-197.1	4497	636.4	-3748	8245
	H	-1846	-7772	1940	-197.1	1940	-1840	-7779	9709
Primary Lid	I	-691.7	-679.5	-17290	-2896	2210	-3581	-17290	19510
	J	209.5	403.7	17450	-2413	17450	2722	-2109	19560
Secondary Lid	K	-23400	-116.5	-23400	0	-116.5	-23400	-23400	23280
	L	22090	-778.3	22090	0	22090	22090	-778.3	22870

General Notes:
(1) See Table 2-1 for load information.
(2) See Figure A2-40 for locations indicated in this table.

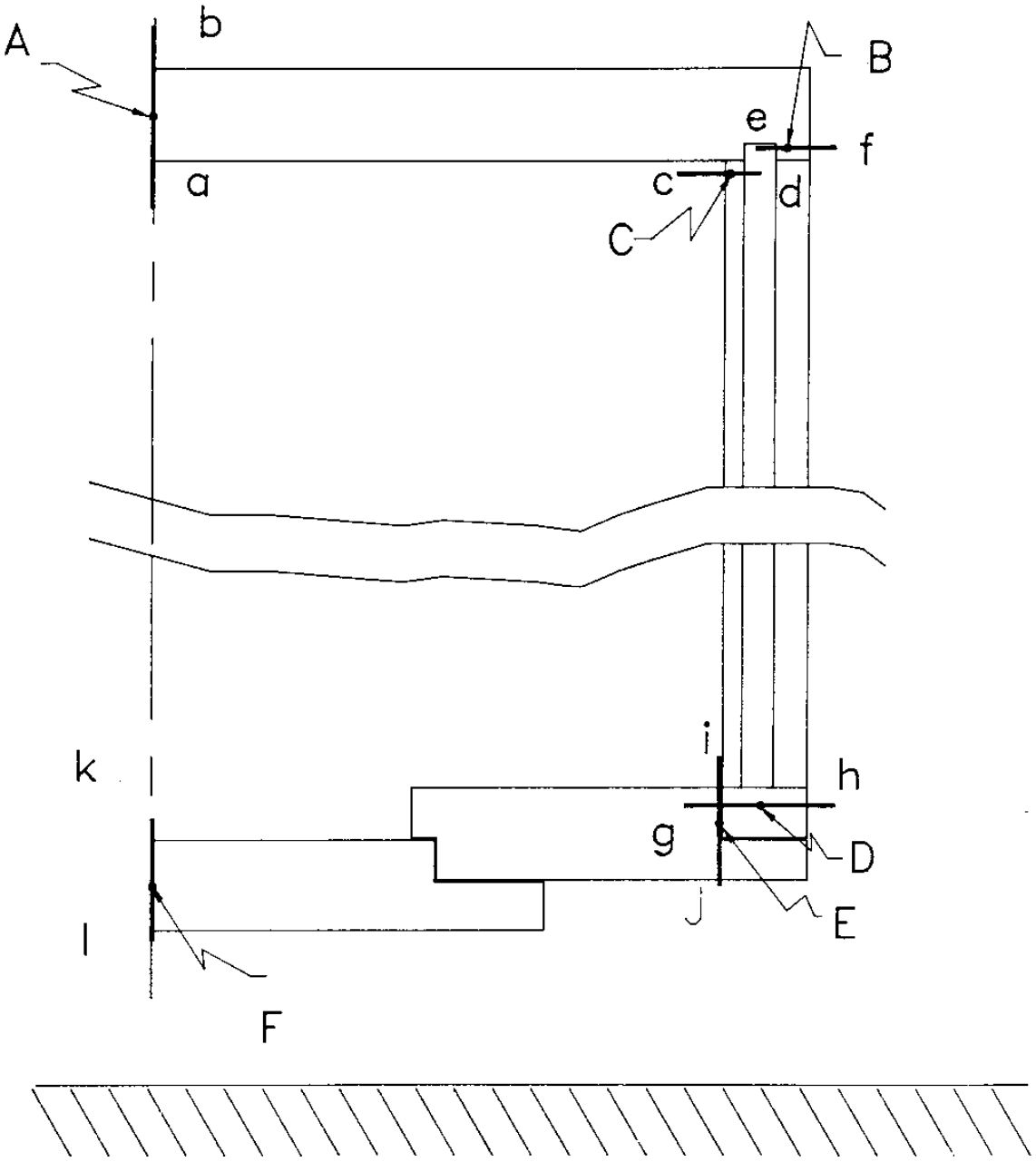

Figure A2-40
Location of Stresses Indicated
In Tables A2-10 and A2-11

TABLE A2-12
MAXIMUM STRESS INTENSITIES IN THE CASK
DUE TO 30-FT END DROP

CASK COMPONENT	STRESS CATEGORY	S.I. VALUE (psi)	ELEMENT NO.	SUBSTR. NO.
BASE PLATE	PL	553	151-155-159	7
	PL+PB	13,630	151-155-159	7
OUTER SHELL	PL	4,071	96-97	4
	PL+PB	10,920	96-97	4
INNER SHELL	PL	6,897	95	4
	PL+PB	12,390	95	4
BOLTING RING	PL	9,028	81-85	4
	PL+PB	9,709	81-85	4
PRIMARY LID	PL	5,310	106-107	3
	PL+PB	19,560	106-107	3
SECONDARY LID	PL	207	14	1
	PL+PB	23,280	14	1

TABLE A2-13
STRESS INTENSITY COMBINATIONS
DUE TO 30-FT END DROP

CASK COMPONENT	STRESS CATEGORY	S.I. VALUE DUE TO					
		①	②	③	④	⑤	⑥
BASIC PLATE	PL	553.1	90.06	98.79	643.16	651.89	651.89
	PL+PB	13,630	570.5	927.3	14,200.5	14,557.3	14,557.3
OUTER SHELL	PL	4,071	261.6	2,884	4,332.6	6,955	6,955
	PL+PB	10,920	585.2	6,051	11,505.2	16,971	16,971
INNER SHELL	PL	6,897	368	4,299	7,265	11,196	11,196
	PL+PB	12,390	705.2	5,602	13,095.2	17,992	17,992
BOLTING RING	PL	9,028	560.4	1,260	9,588.4	10,288	10,288
	PL+PB	9,709	805.9	1,378	10,514.9	11,087	11,087
PRIMARY LID	PL	5,310	288.3	364.5	5,598.3	5,674.5	5,674.5
	PL+PB	19,560	749.9	658.3	20,309.9	20,218.3	20,309.9
SECONDARY LID	PL	207.3	17.46	7.131	224.76	214.43	224.76
	PL+PB	23,280	565.8	485.8	23,845.8	23,765.8	23,845.8

① 30' END DROP LOADING
② INCREASED EXTERNAL PRESSURE LOADING
③ MINIMUM EXTERNAL PRESSURE LOADING
④ LOADING ① + LOADING ②
⑤ LOADING ① + LOADING ③
⑥ LARGER OF LOADING ④ AND ⑤

TABLE A2-14
MEMBRANE STRESSES IN VARIOUS COMPONENTS OF THE CASK
30-FT SIDE DROP(1)

COMPONENT	LOCATION(2)	STRESS COMPONENTS				PRINCIPAL STRESSES			
		NORMAL RADIAL psi	NORMAL AXIAL psi	NORM HOOP psi	IN-PLANE psi	S1 psi	S2 psi	S3 psi	S.I. psi
BASE PLATE	A	-12690	-1795	988	1194	994	-1666	-12830	13820
OUTER SHELL	B	5945	5448	13230	12870	22960	9313	-7648	30610
INNER SHELL	C	6957	29813	22258	12871	37724	22338	1036	38756
BOLTING RING	D	-35510	-9152	9440	-1414	9653	-8567	-36310	45960
PRIMARY LID	E	-14650	-2223	-9630	-1685	-1997	-8987	-14960	12960
SECONDARY LID	F	-10249	-2008	2308	1207	2308	-2008	-10249	13784

GENERAL NOTES: (1) See Table 2-1 for load combinations.
(2) See Figure A2-41 for locations indicated in this table.

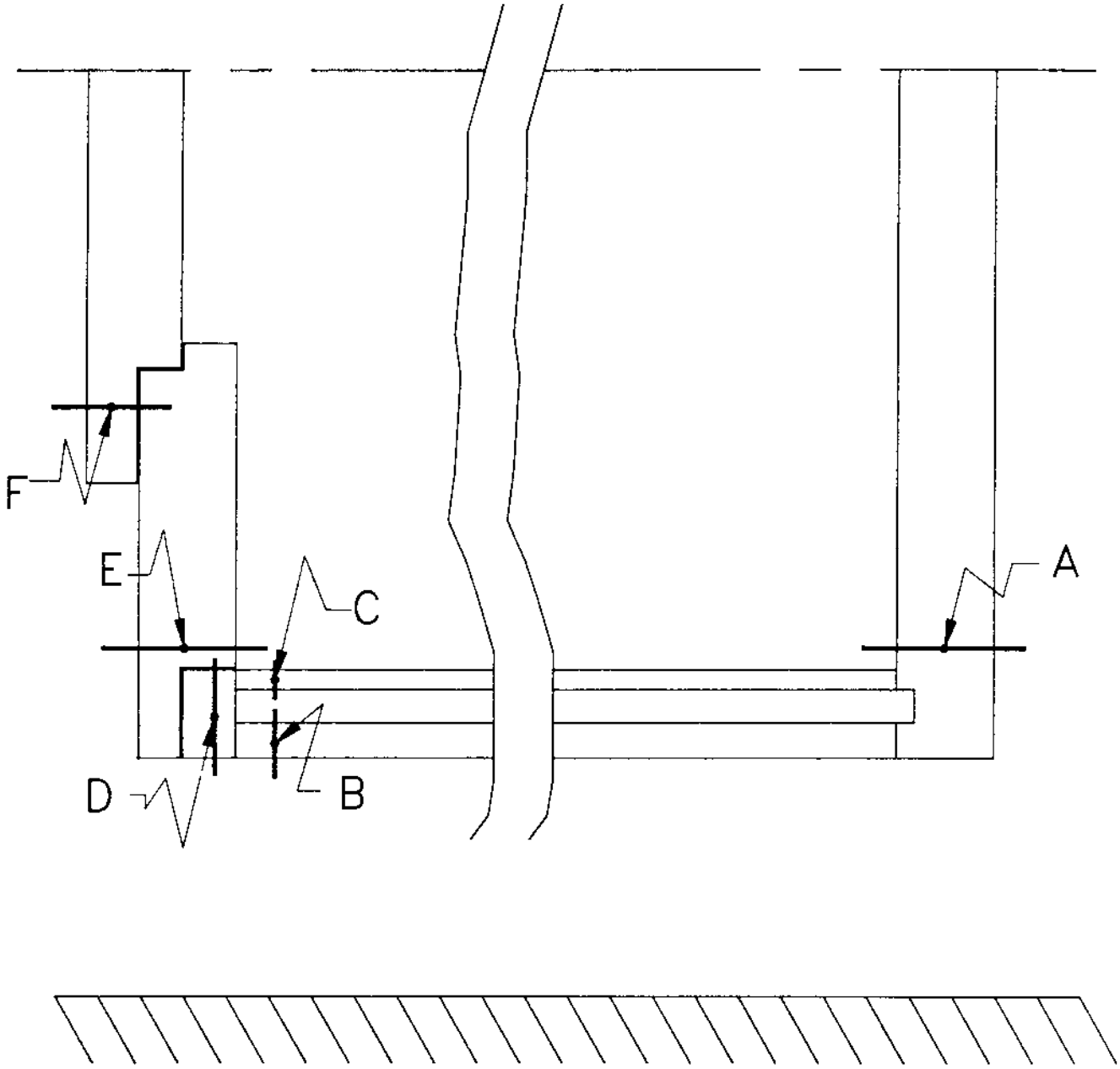

FIGURE A2-41
LOCATIONS OF STRESSES INDICATED IN
TABLE A2-14

TABLE A2-15
MEMBRANE PLUS BENDING STRESSES IN VARIOUS COMPONENTS OF THE CASK
30-FT SIDE DROP(1)

COMPONENT	LOCATION(2)	STRESS COMPONENTS				PRINCIPAL STRESSES			
		NORMAL RADIAL psi	NORMAL AXIAL psi	NORM HOOP psi	IN-PLANE psi	S1 psi	S2 psi	S3 psi	S.I. psi
BASE PLATE	a	-31120	140	-3428	3352	495	-3425	-31480	31970
	b	5735	-3730	5403	-964	5988	5249	-3825	9816
OUTER SHELL	c	-5140	-11810	12840	5444	14360	-893	-17570	31930
	d	-8418	22230	13430	5444	24100	14710	-11560	35660
INNER SHELL	e	4905	-12427	21476	3466	22649	7332	-16071	38720
	f	-4301	44756	29324	3466	47147	28471	-5838	52987
BOLTING RING	g	-36120	-8845	13250	-1414	13430	-8254	-36890	50032
	h	-14150	-9458	5786	-1414	6141	-7015	-16950	23090
PRIMARY LID	i	-37820	-4849	-20150	-5871	-3833	-20150	-38830	35000
	j	8510	404	2022	2501	9381	1882	-328	9710

GENERAL NOTES: (1) See Table 2-1 for load combinations.
(2) See Figure A2-42 for locations indicated in this table.

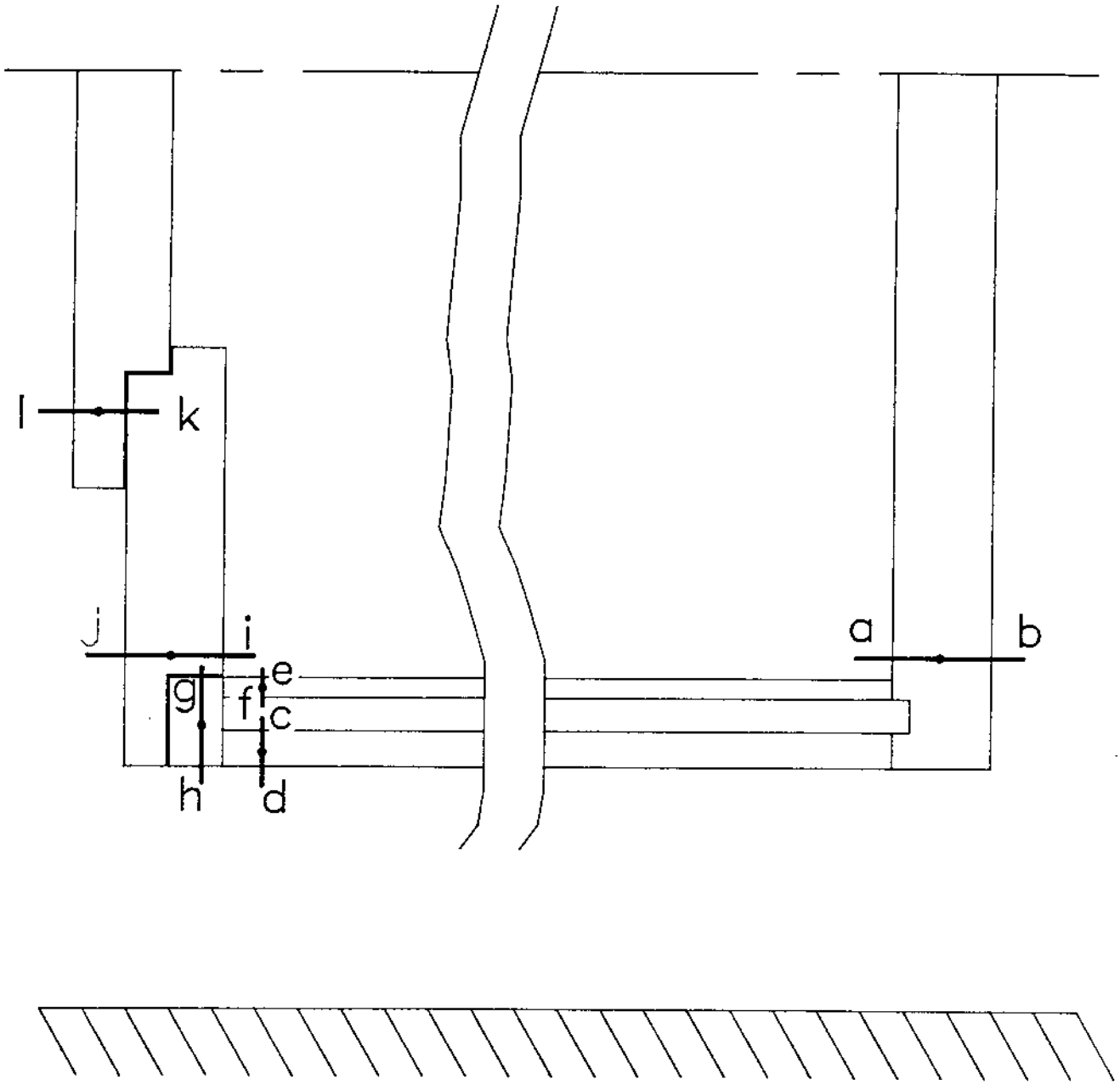

FIGURE A2-42
30-FT SIDE DROP
LOCATIONS OF STRESSES INDICATED IN
TABLE A2-15

TABLE A2-16
MAXIMUM STRESS INTENSITIES IN THE CASK
DUE TO 30-FT SIDE DROP

CASK COMPONENT	STRESS CATEGORY	S.I. VALUE (psi)	ELEMENT NO.	SUBSTR. NO.
BASE PLATE	PL	13,820	71-73	6
	PL+PB	31,970	71-73	6
OUTER SHELL	PL	30,610	11-12	4
	PL+PB	35,660	11-12	4
INNER SHELL	PL	38,756	15	4
	PL+PB	52,987	15	4
BOLTING RING	PL	45,960	6-10	4
	PL+PB	50,032	6-10	4
PRIMARY LID	PL	12,960	11-15	3
	PL+PB	35,000	11-15	3
SECONDARY LID	PL	13,784	13	1
	PL+PB	36,830	13	1

TABLE A2-17
STRESS INTENSITY COMBINATIONS
DUE TO 30-FT SIDE DROP

CASK COMPONENT	STRESS CATEGORY	S.I. VALUE DUE TO					
		①	②	③	④	⑤	⑥
BASIC PLATE	PL	13,820	90.06	98.79	13,910.06	13,918.79	13,918.79
	PL+PB	31,970	570.5	927.3	32,540.5	32,897.3	32,897.3
OUTER SHELL	PL	30,610	261.6	2,884	30,871.6	33,494	33,494
	PL+PB	35,660	585.2	6,051	36,245.2	41,711	41,711
INNER SHELL	PL	38,756	368	4,299	39,124	43,055	43,055
	PL+PB	52,987	705.2	5,602	53,692.2	58,589	58,589
BOLTING RING	PL	45,960	560.4	1,260	46,520.4	47,220	47,220
	PL+PB	50,032	805.9	1,378	50,837.9	51,410	51,410
PRIMARY LID	PL	12,960	288.3	364.5	13,248.3	13,324.5	13,324.5
	PL+PB	35,000	749.9	658.3	35,749.9	35,658.3	35,749.9
SECONDARY LID	PL	13,784	17.46	7.131	13,801.46	13,791.13	13,801.46
	PL+PB	36,830	565.8	485.8	37,395.80	37,315.80	37,395.80

① 30' END DROP LOADING
② INCREASED EXTERNAL PRESSURE LOADING
③ MINIMUM EXTERNAL PRESSURE LOADING
④ LOADING ① + LOADING ②
⑤ LOADING ① + LOADING ③
⑥ LARGER OF LOADING ④ AND ⑤

TABLE A2-18
MEMBRANE STRESSES IN VARIOUS COMPONENTS OF THE CASK
30-FT CORNER DROP(1)

COMPONENT	LOCATION(2)	STRESS COMPONENTS				PRINCIPAL STRESSES			
		NORMAL RADIAL psi	NORMAL AXIAL psi	NORM HOOP psi	IN-PLANE psi	S1 psi	S2 psi	S3 psi	S.I. psi
BASE PLATE	A	-11180	-6152	-2912	-2002	-2286	-5146	-12810	10520
OUTER SHELL	B	-1849	-116501	-8301	583	-1777	-8352	-11670	9895
INNER SHELL	C	-1239	-22600	-7652	149	-1206	-5346	-24940	23730
BOLTING RING	D	3075	-18130	-14200	1460	3641	-13700	-19200	22840
PRIMARY LID	E	-8698	-1832	-1894	10310	6187	-1662	-16950	23140
SECONDARY LID	F	1713	945	10178	2000	11957	1713	945	11012

GENERAL NOTES: (1) See Table 2-1 for load combinations.
(2) See Figure A2-43 for locations indicated in this table.

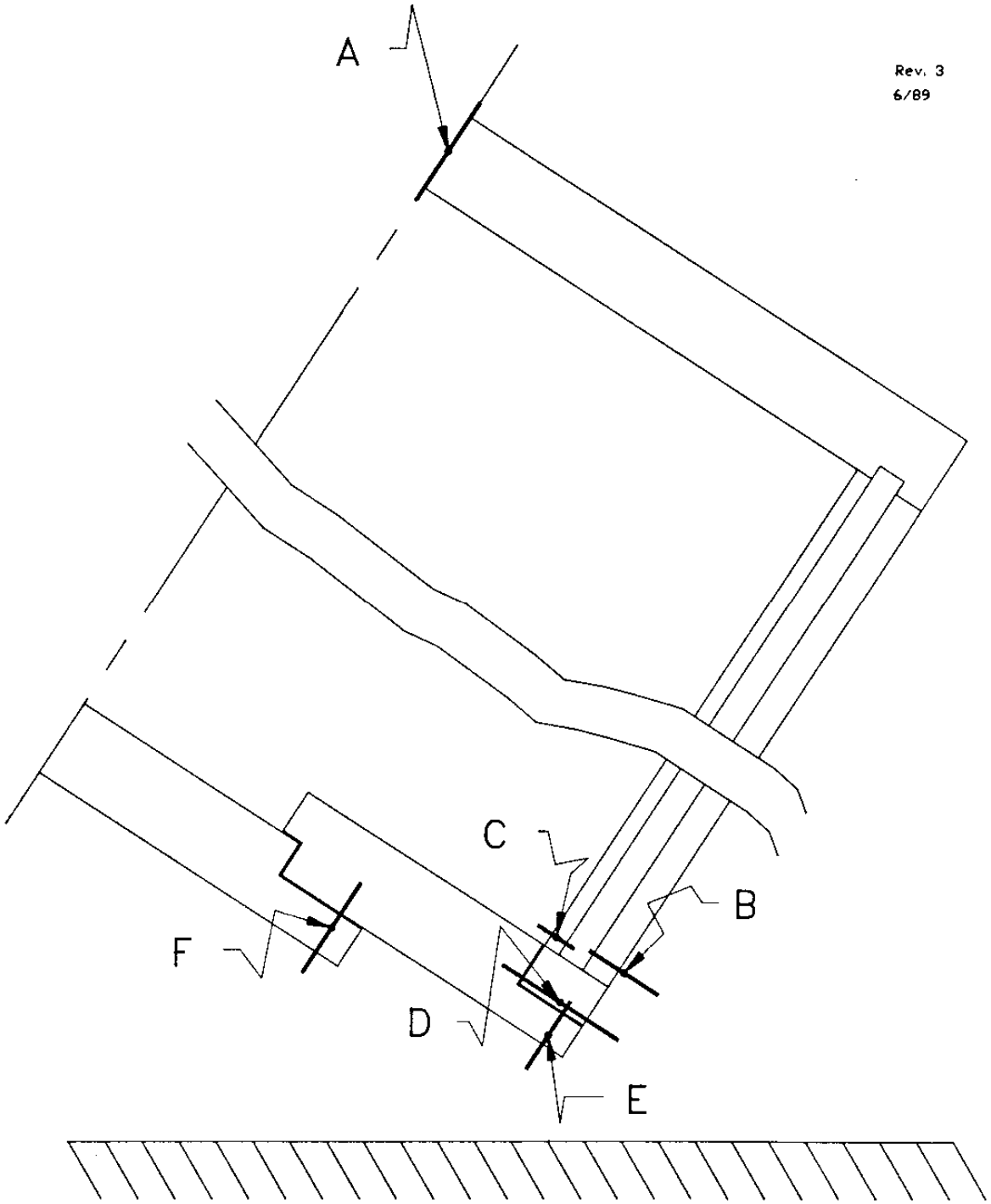

FIGURE A2-43
30-FT CORNER DROP
LOCATIONS OF STRESSES INDICATED IN
TABLE A2-18

TABLE A2-19

MEMBRANE PLUS BENDING STRESSES IN VARIOUS COMPONENTS OF THE CASK

30-FT CORNER DROP[1]

COMPONENT	LOCATION[2]	STRESS COMPONENTS				PRINCIPAL STRESSES			
		NORMAL RADIAL psi	NORMAL AXIAL Psi	NORM HOOP psi	IN-PLANE psi	S1 psi	S2 psi	S3 psi	S.I. psi
BASE PLATE	a	3363	-2658	7850	-849	8030	4308	-3783	11810
	b	-25720	-9647	-13670	-3156	-8940	-13150	-26940	18000
OUTER SHELL	c	-2254	-13600	-8206	583	-2184	-8261	-13610	11430
	d	-1461	-9711	-8394	583	-1363	-8439	-9735	8372
INNER SHELL	e	-1137	-20930	-7044	149	-1101	-4609	-23400	2230
	f	-1164	-24270	-8255	149	-1134	-6068	-26490	25350
BOLTING RING	g	5703	-24600	-13930	1460	6197	-13970	-25060	31250
	h	3201	-11660	-14460	1460	3781	-10690	-16010	19790
PRIMARY LID	i	-21070	3027	2926	8095	7889	1456	-24460	32350
	j	7979	-1148	-6227	3492	9297	-1067	-7625	16920

GENERAL NOTES: (1) See Table 2-1 for load combinations.
(2) See Figure A2-44 for locations indicated in this table.

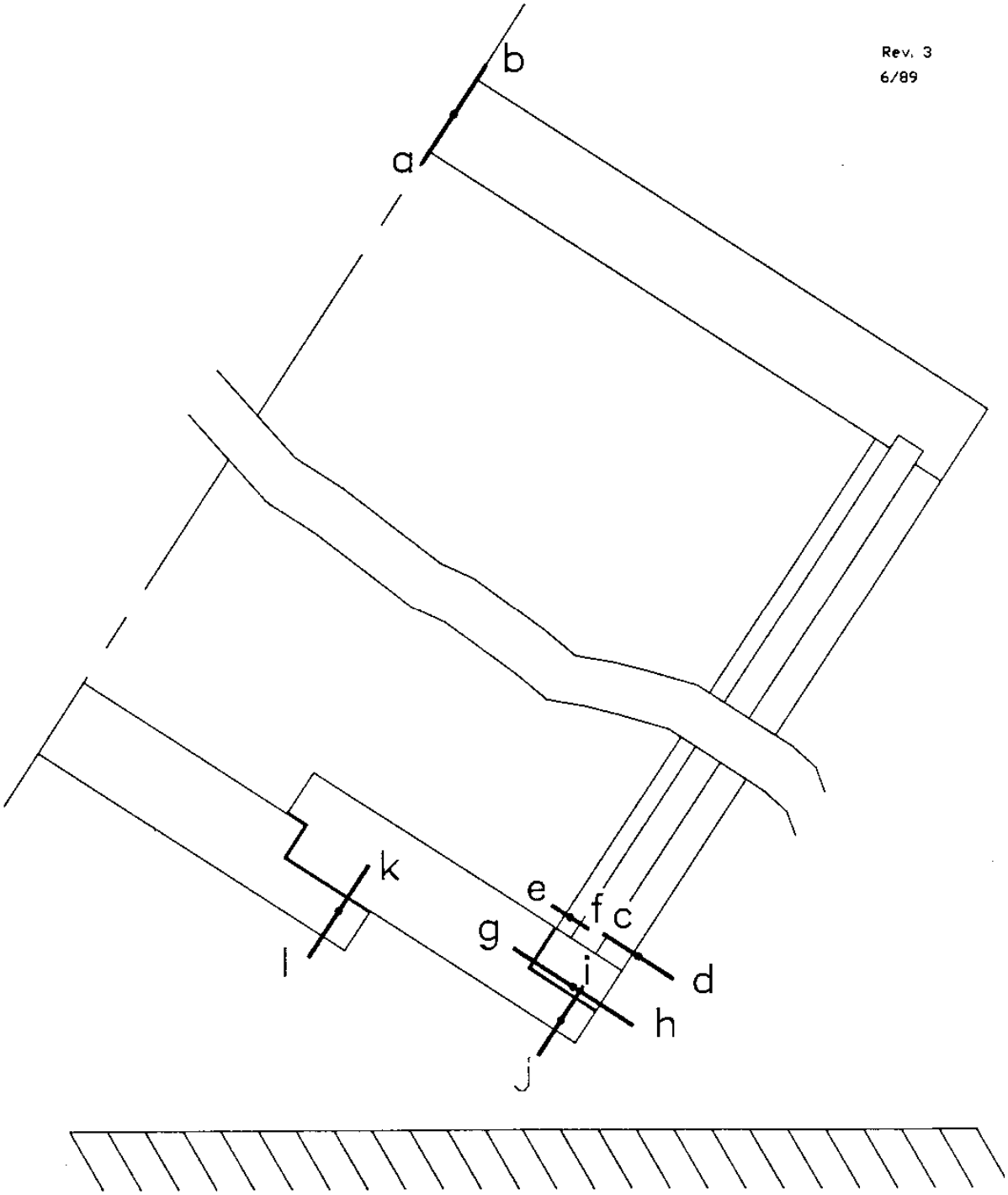

FIGURE A2-44
30-FT CORNER DROP
LOCATIONS OF STRESSES INDICATED
IN TABLE A2-19

TABLE A2-20

MAXIMUM STRESS INTENSITIES IN THE CASK

DUE TO 30-FT CORNER DROP

CASK COMPONENT	STRESS CATEGORY	S.I. VALUE (psi)	ELEMENT NO.	SUBSTR. NO.
BASE PLATE	PL	10,520	151-155-159	7
	PL+PB	18,000	151-155-159	7
OUTER SHELL	PL	9,895	11-12	4
	PL+PB	11,430	11-12	4
INNER SHELL	PL	23,730	95	4
	PL+PB	23,350	95	4
BOLTING RING	PL	22,840	81-85	4
	PL+PB	31,250	81-85	4
PRIMARY LID	PL	23,140	138-139	3
	PL+PB	32,350	138-139	3
SECONDARY LID	PL	11,012	21	1
	PL+PB	19,670	21	1

TABLE A2-21

STRESS INTENSITY COMBINATIONS
DUE TO 30-FT CORNER DROP

CASK COMPONENT	STRESS CATEGORY	S.I. VALUE DUE TO					
		1	2	3	4	5	6
BASIC PLATE	PL	10,520	90.06	98.79	10,610.06	10,618.79	10,618.79
	PL+PB	18,000	570.5	927.3	18,570.5	18,927.3	18,927.3
OUTER SHELL	PL	9,895	261.6	2,884	10,156.6	12,779	12,779
	PL+PB	11,430	585.2	6,051	12,015.2	17,481	17,481
INNER SHELL	PL	23,730	368	4,299	24,098	28,029	28,029
	PL+PB	25,350	705.2	5,602	26,055.2	30,952	30,952
BOLTING RING	PL	22,840	560.4	1,260	23,400.4	24,100	24,100
	PL+PB	31,250	805.9	1,378	32,055.9	32,628	32,628
PRIMARY LID	PL	23,140	288.3	364.5	23,428.3	23,504.5	23,504.5
	PL+PB	32,350	749.9	658.3	33,099.9	33,008.3	33,099.9
SECONDARY LID	PL	11,012	17.46	7.131	11,029.46	11,019.13	11,029.46
	PL+PB	19,670	565.8	485.8	20,235.8	20,155.8	20,235.8

(1) 30' CORNER DROP LOADING
(2) INCREASED EXTERNAL PRESSURE LOADING
(3) VIRTUAL EXTERNAL PRESSURE LOADING
(4) LOADING (1) + LOADING (3)
(5) LOADING (3) + LOADING (3)
(6) ABOLE OF LOADING (4) AND (5)

TABLE A2-22

MAXIMUM STRESS INTENSITIES IN THE CASK

DUE TO 1-FT END DROP[1]

CASK COMPONENT	STRESS CATEGORY	S.I. VALUE (psi)	ELEMENT NO.	SUBSTR. NO.
BASE PLATE	PL	171.03	151-155-159	7
	PL+PB	4,214.74	151-155-159	7
OUTER SHELL	PL	1,258.86	96-97	4
	PL+PB	3,376.74	96-97	4
INNER SHELL	PL	2,132.72	95	4
	PL+PB	3,831.30	95	4
BOLTING RING	PL	2,791.69	81-85	4
	PL+PB	3,002.27	81-85	4
PRIMARY LID	PL	1,641.99	106-107	3
	PL+PB	6,048.45	106-107	3
SECONDARY LID	PL	64.102	14	1
	PL+PB	7,198.77	14	1

NOTE(s) (1) S.I. values for the 1-FT drop conditions have been calculated by ratioing the corresponding 30-FT drop S.I. values by acceleration ratio.

TABLE A2-23

STRESSES INTENSITY COMBINATIONS
DUE TO 1-FT END DROP

CASK COMPONENT	STRESS CATEGORY	S.I. VALUE DUE TO					
		1	2	3	4	5	6
BASIC PLATE	PL	171.03	90.06	98.79	261.09	269.82	269.82
	PL+PB	4,214.74	570.5	927.3	4,785.24	5,142.04	5,142.04
OUTER SHELL	PL	1,258.86	261.6	2,884	1,520.46	4,142.86	4,142.86
	PL+PB	3,376.74	585.2	6,051	3,961.94	9,427.74	9,427.74
INNER SHELL	PL	2,132.72	368	4,299	2,500.72	6,431.72	6,431.72
	PL+PB	3,831.30	705.2	5,602	4,536.5	9,433.3	9,433.3
BOLTING RING	PL	2,791.69	560.4	1,260	3,352.09	4,051.69	4,051.69
	PL+PB	3,002.27	805.9	1,378	3,808.17	4,380.27	4,380.27
PRIMARY LID	PL	1,641.99	288.3	364.5	1,930.29	2,006.49	2,006.49
	PL+PB	6,048.45	749.9	658.3	6,798.35	6,706.75	6,798.35
SECONDARY LID	PL	64.102	17.46	7.131	81.56	71.233	81.56
	PL+PB	7,198.77	565.8	485.8	7,764.57	7,684.57	7,764.57

1 90° CORNER DROP LOADING
2 INCREASED EXTERNAL PRESSURE LOADING
3 VIRTUAL EXTERNAL PRESSURE LOADING
4 LOADING 1 + LOADING 2
5 LOADING 3 + LOADING 2
6 ARGE OF LOADING 4 AND 5

TABLE A2-24

MAXIMUM STRESS INTENSITIES IN THE CASK

DUE TO 1-FT SIDE DROP[1]

CASK COMPONENT	STRESS CATEGORY	S.I. VALUE (psi)	ELEMENT NO.	SUBSTR. NO.
BASE PLATE	PL	3,323.21	71-73	6
	PL+PB	7,687.64	71-73	6
OUTER SHELL	PL	7,360.61	11-12	4
	PL+PB	8,574.95	11-12	4
INNER SHELL	PL	9,319.43	15	4
	PL+PB	12,741.48	15	4
BOLTING RING	PL	11,051.74	6-10	4
	PL+PB	12,030.91	6-10	4
PRIMARY LID	PL	3,116.42	11-15	3
	PL+PB	8,416.25	11-15	3
SECONDARY LID	PL	3,314.56	13	1
	PL+PB	8,856.3	13	1

NOTE(s) (1) S.I. values for the 1-FT drop conditions have been calculated by ratioing the corresponding 30-FT drop S.I. values by acceleration ratio.

TABLE A2-25

STRESS INTENSITY COMBINATIONS
DUE TO 1-FT SIDE DROP

CASK COMPONENT	STRESS CATEGORY	S.I. VALUE DUE TO					
		1	2	3	4	5	6
BASIC PLATE	PL	3,323.21	90.06	98.79	3,413.27	3,422	3,422
	PL+PB	7,687.64	570.5	927.3	8,258.14	8,614.94	8,614.94
OUTER SHELL	PL	7,360.61	261.6	2,884	7,622.21	10,244.61	10,244.61
	PL+PB	8,574.95	585.2	6,051	9,160.15	14,625.95	14,625.95
INNER SHELL	PL	9,319.43	368	4,299	9,687.43	13,618.43	13,618.43
	PL+PB	12,741.48	705.2	5,602	13,446.68	18,343.48	18,343.48
BOLTING RING	PL	11,051.74	560.4	1,260	11,612.14	12,311.74	12,311.74
	PL+PB	12,030.91	805.9	1,378	12,836.81	13,408.91	13,408.91
PRIMARY LID	PL	3,116.42	288.3	364.5	3,404.72	3,480.92	3,480.92
	PL+PB	8,416.25	749.9	658.3	9,166.15	9,074.55	9,166.15
SECONDARY LID	PL	3,314.56	17.46	7.131	3,332.02	3,321.69	3,332.02
	PL+PB	8,856.3	565.8	485.8	9,422.1	9,342.1	9,422.1

(1) 1' SIDE DROP LOADING
(2) INCREASED EXTERNAL PRESSURE LOADING
(3) MINIMUM EXTERNAL PRESSURE LOADING
(4) LOADING (1) + LOADING (2)
(5) LOADING (3) + LOADING (2)
(6) LARGER OF LOADING (4) AND (5)

TABLE A2-26

MAXIMUM STRESS INTENSITIES IN THE CASK

DUE TO 1-FT CORNER DROP[1]

CASK COMPONENT	STRESS CATEGORY	S.I. VALUE (psi)	ELEMENT NO.	SUBSTR. NO.
BASE PLATE	PL	1,390.24	151-155-159	7
	PL+PB	2,378.74	151-155-159	7
OUTER SHELL	PL	1,307.65	11-12	4
	PL+PB	1,510.5	11-12	4
INNER SHELL	PL	3,135.98	95	4
	PL+PB	3,350.06	95	4
BOLTING RING	PL	3,018.36	81-85	4
	PL+PB	4,129.76	81-85	4
PRIMARY LID	PL	3,058	138-139	3
	PL+PB	4,275.13	138-139	3
SECONDARY LID	PL	1,455.26	21	1
	PL+PB	2,599.4	21	1

NOTE(s) (1) S.I. values for the 1-FT drop conditions have been calculated by ratioing the corresponding 30-FT drop S.I. values by acceleration ratio.

TABLE A2-27

STRESS INTENSITY COMBINATIONS
DUE TO 1-FT CORNER DROP

CASK COMPONENT	STRESS CATEGORY	S.I. VALUE DUE TO					
		①	②	③	④	⑤	⑥
BASIC PLATE	PL	1,390.24	90.06	98.79	1,480.3	1,489.03	1,489.03
	PL+PB	2,378.74	570.5	927.3	2,949.24	3,306.04	3,306.04
OUTER SHELL	PL	1,307.65	261.6	2,884	1,569.25	4,191.65	4,191.65
	PL+PB	1,510.5	585.2	6,051	2,095.7	7,561.5	7,561.5
INNER SHELL	PL	3,135.98	368	4,299	3,503.98	7,434.98	7,434.98
	PL+PB	3,350.06	705.2	5,602	4,055.26	8,952.06	8,952.06
BOLTING RING	PL	3,018.36	560.4	1,260	3,578.76	4,278.36	4,278.36
	PL+PB	4,129.76	805.9	1,378	4,935.66	5,507.76	5,507.76
PRIMARY LID	PL	3,058	288.3	364.5	3,346.3	3,422.5	3,422.5
	PL+PB	4,275.13	749.9	658.3	5,025.03	4,933.43	5,025.03
SECONDARY LID	PL	1,455.26	17.46	7.131	1,472.72	1,462.39	1,472.72
	PL+PB	2,599.40	565.8	485.8	3,165.20	3,085.20	3,165.20

① 1' SIDE DROP LOADING
② INCREASED EXTERNAL PRESSURE LOADING
③ VACUUM EXTERNAL PRESSURE LOADING
④ LOADING ① + LOADING ②
⑤ LOADING ③ + LOADING ①
⑥ LARGER OF LOADING ④ AND ⑤

FIGURE A2-28

INTENTIONALLY LEFT BLANK

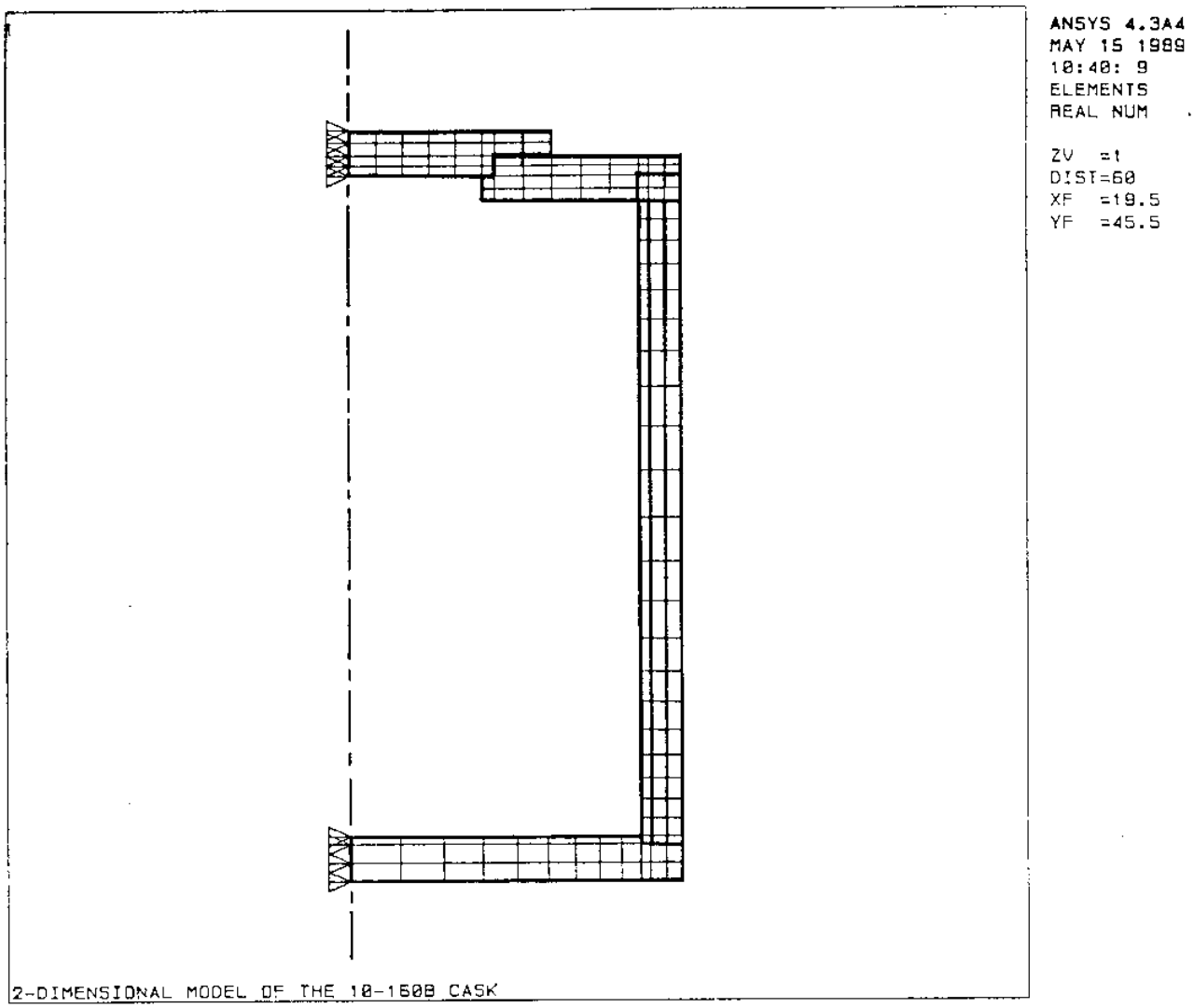

FIGURE A2-44.1
Two-Dimensional Finite Element Model
Used in the Analysis of 10-160B Cask
Under Axisymmetric Loading

Temperature dependent material properties of the steel and the lead, as listed in Table 2-3, were used in the model. The loading to the model was applied as the element pressures and element temperatures corresponding to each loading case. The results of the analyses are presented in tabular form and the locations of the maximum mean and mean-plus-bending stress intensities are identified in Figures. The load cases analyzed using this model with the corresponding loading and the result tables and figures are listed in the following paragraphs:

(1) Hot Environment:

Ambient Temperature	=	100°F
Internal Pressure	=	8.4 psi
External Pressure	=	0 psi
Result Table	=	A2-31 and A2-32
Corresponding Figure	=	A2-45

(2) Cold Environment

Ambient Temperature	=	-40°F
Internal Pressure	=	11.2 psi
External Pressure	=	0 psi
Result Table	=	A2-29 and A2-30
Corresponding Figure	=	A2-45

(3) Increased External Pressure

Ambient Temperature	=	-20°F
Internal Pressure	=	0 psi
External Pressure	=	20 psi
Result Table	=	A2-33 and A2-34
Corresponding Figure	=	A2-45

(4) Minimum External Pressure

Ambient Temperature	=	100°F
Internal Pressure	=	23.1 psi
External Pressure	=	3.5 psi
Result Table	=	A2-35 and A2-36
Corresponding Figure	=	A2-45

(5) Fire Accident

Ambient Temperature	=	1475°F
Internal Pressure	=	31.2 psi
External Pressure	=	0 psi

Temperature in various components of the cask per Table 3.1 and shown in Figure A2-47

Result Table	=	A2-41 and A2-42
Corresponding Figure	=	A2-48

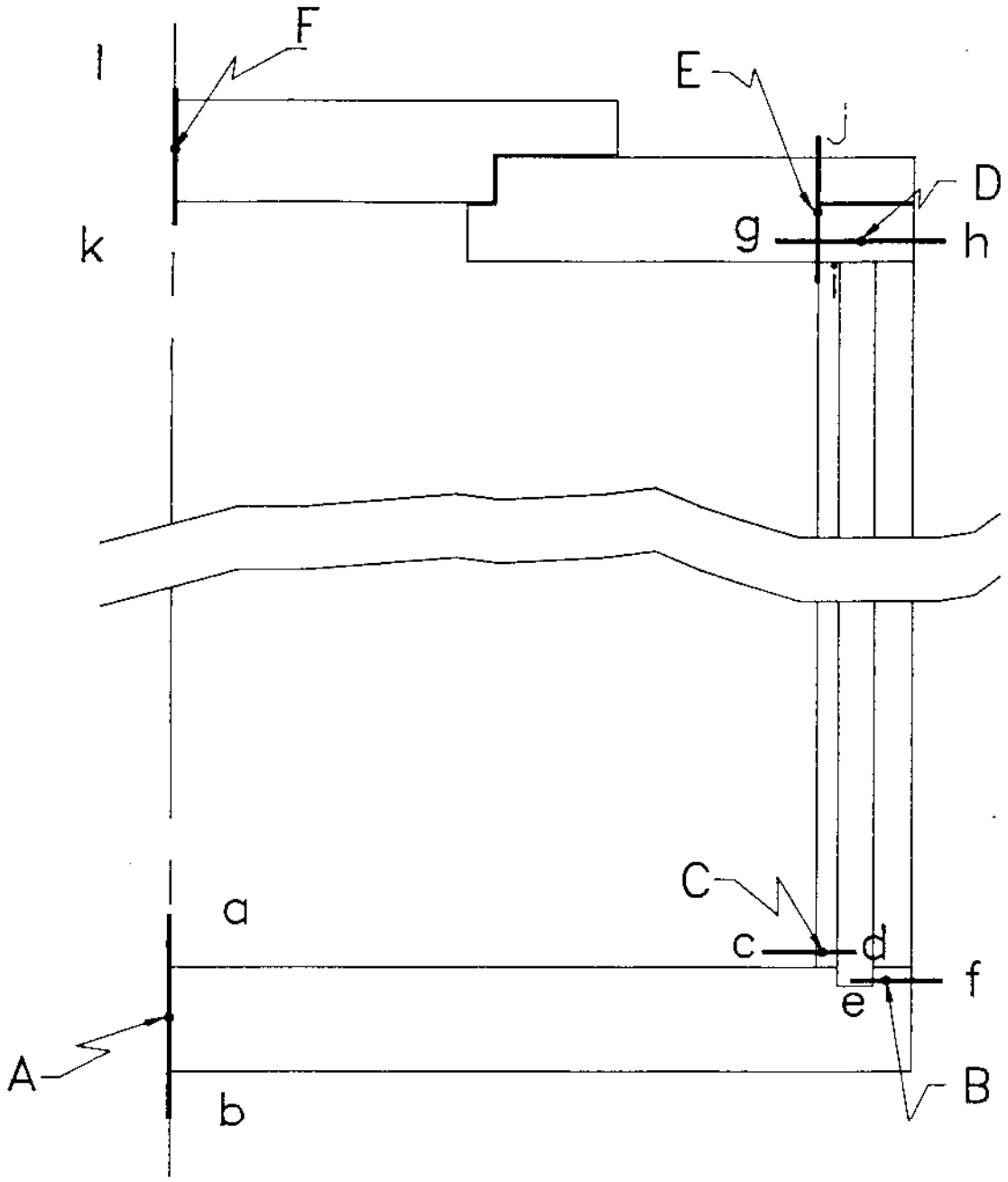

FIGURE A2-45
LOCATIONS OF STRESSES INDICATED
IN TABLES A2-29 THROUGH A2-36

TABLE A2-29

MEMBRANE STRESSES IN VARIOUS COMPONENTS OF THE CASK

COLD ENVIRONMENT(1)

COMPONENT	LOCATION(2)	STRESS COMPONENTS				PRINCIPAL STRESSES			
		NORMAL RADIAL psi	NORMAL AXIAL psi	NORM HOOP psi	IN-PLANE psi	S1 psi	S2 psi	S3 psi	S.I. psi
BASE PLATE	A	-26.86	-7.162	-26.86	0	-7.162	-26.86	-26.86	19.7
OUTER SHELL	B	211.8	-43.17	-109.7	7.674	212	-43.41	-109.7	321.7
INNER SHELL	C	-264.1	99.56	-394	-59.35	109	-273.5	-394	503
BOLTING RING	D	-49.28	17.93	-131.3	0.187	17.93	-49.28	-131.3	149.2
PRIMARY LID	E	33.43	-77.01	180.7	-39.19	180.7	45.93	-89.5	270.2
SECONDARY LID	F	-12.16	-6.334	-12.16	0	-6.334	-12.16	-12.16	5.825

GENERAL NOTES: (1) See Table 2-1 for load combinations.
(2) See Figure A2-45 for locations indicated in this table.

TABLE A2-30

MEMBRANE PLUS BENDING STRESSES IN VARIOUS COMPONENTS OF THE CASK

COLD ENVIRONMENT(1)

COMPONENT	LOCATION(2)	STRESS COMPONENTS				PRINCIPAL STRESSES			
		NORMAL RADIAL psi	NORMAL AXIAL psi	NORM HOOP psi	IN-PLANE psi	S1 psi	S2 psi	S3 psi	S.I. psi
BASE PLATE	a	-706.2	-1.773	-706.2	0	1.773	-706.2	-706.2	708
	b	-652.5	-16.1	652.5	0	652.5	652.5	-16.1	668.6
OUTER SHELL	c	50.9	590.8	127.3	7.674	590.9	127.3	50.79	540.1
	d	184.2	-666.1	-346.7	7.674	184.3	-346.7	-666.2	850.5
INNER SHELL	e	-307.1	-452	-579	-59.35	-285.9	-473.2	-579	293.1
	f	-221	645.2	-208.9	-59.35	649.2	-208.9	-225.1	874.3
BOLTING RING	g	-35.87	25.79	-133.6	0.187	25.79	-35.87	-133.6	159.4
	h	-12.02	10.42	-129	0.187	10.42	-12.02	-129	139.4
PRIMARY LID	i	-229.5	-119.2	-83.74	-72.18	-83.54	-83.74	-262.2	181.7
	j	296.4	-34.79	445.2	-6.201	445.2	296.5	-34.9	480.1
SECONDARY LID	k	-433	0.659	-433	0	0.659	-433	-433	433.7
	l	408.7	13.33	408.7	0	408.7	408.7	-13.33	422.1

GENERAL NOTES: (1) See Table 2-1 for load combinations.
(2) See Figure A2-44 for locations indicated in this table.

TABLE A2-31

MEMBRANE STRESSES IN VARIOUS COMPONENTS OF THE CASK

HOT ENVIRONMENT(1)

Cask Component	Location(2)	Stress Components, (psi)(3)				Principal Stresses (psi)(3)			S.I.(3) (psi)	S.I.(4) (psi)
		Normal Radial	Normal Axial	Normal Hoop	In-Plane Shear	S_1	S_2	S_3		
Base Plate	A	73.65	-4	73.65	0	73.65	73.65	-4	77.67	99
Outer Shell	B	2541	180.5	995.7	766.7	2768	995.7	-46.67	2815	2,927
Inner Shell	C	-2443	1471	-684.8	-968.8	1698	-684.8	-2670	4368	4,500
Bolting Ring	D	187.4	-20.29	1144	-47.54	1144	197.7	-30.65	1175	1,224
Primary Lid	E	79.31	-197.9	98.58	-47.05	98.58	87.08	-205.7	304.2	341
Secondary Lid	F	-6.145	-1.624	-6.145	0	-1.624	-6.145	-6.145	4.521	8

GENERAL NOTES:

(1) See Table 2-1 for load combinations.
(2) See Figure A2-45 for locations indicated in this table.
(3) These stresses were calculated with 2.4 psi internal pressure in the cask.
(4) Conservatively the stress intensities corresponding to 8.4 psi cask internal pressure have been added to the stress intensities of the previous column. The stress intensities for 8.4 psi internal pressure are obtained by multiplying the stress intensities of Table A2-37 by a factor of 8.4/10 = 0.84.

TABLE A2-32

MEMBRANE STRESSES IN VARIOUS COMPONENTS OF THE CASK

HOT ENVIRONMENT [1]

Cask Component	Location[2]	Stress Components, (psi)[3]				Principal Stresses (psi)[3]			S.I.[3] (psi)	S.I.[4] (psi)
		Normal Radial	Normal Axial	Normal Hoop	In-Plane Shear	S_1	S_2	S_3		
Base Plate	a	-444.2	3.197	-444.2	0	3.197	-444.2	-444.2	447.4	732
	b	591.5	-11.24	591.5	0	591.5	591.5	-11.24	602.8	930
Outer Shell	c	-3151	2564	1178	766.7	2665	1778	-3252	5917	6,136
	d	1910	-2162	213.1	766.7	2050	213.1	-2302	4351	4,689
Inner Shell	E	-2456	-250.5	-1185	-968.9	114.7	-1185	-2822	2936	3,178
	F	-2430	3174	-185	-968.9	3337	-185	-2593	5930	6,227
Bolting Ring	G	-23.96	-298.3	1044	-47.54	1044	-15.96	-306.3	1350	1,434
	H	840.7	245.4	1245	-47.54	1245	844.4	241.6	1004	1,078
Primary Lid	i	-511	-281.5	-241.2	-95.13	-241.2	-247.1	-545.3	304.1	665
	j	669.6	-1143.	438.3	1.034	669.6	438.3	-1143.3	783.9	1,149
Secondary Lid	k	-220.8	2.811	-220.8	0	2.811	-220.8	-220.8	223.6	521
	l	208.5	-6.058	208.5	0	208.5	208.5	-6.058	214.6	504

GENERAL NOTES:

(1) See Table 2-1 for load combinations.
(2) See Figure A2-45 for locations indicated in this table.
(3) These stresses were calculated with 2.4 psi internal pressure in the cask.
(4) Conservatively the stress intensities corresponding to 8.4 psi cask internal pressure have been added to the stress intensities of the previous column. The stress intensities for 8.4 psi internal pressure are obtained by multiplying the stress intensities of Table A2-37 by a factor of 8.4/10 = 0.84.

TABLE A2-33

MEMBRANE STRESSES IN VARIOUS COMPONENTS OF THE CASK

INCREASED EXTERNAL PRESSURE[1]

COMPONENT	LOCATION[2]	STRESS COMPONENTS				PRINCIPAL STRESSES			
		NORMAL RADIAL psi	NORMAL AXIAL psi	NORM HOOP psi	IN-PLANE psi	S1 psi	S2 psi	S3 psi	S.I. psi
BASE PLATE	A	-97.14	-7.081	-97.14	0	-7.081	-97.14	-97.14	90.06
OUTER SHELL	B	-196.9	64.7	-58.85	-0.0844	64.7	-58.85	-196.9	261.6
INNER SHELL	C	-376.7	-20.06	-112.1	-45.42	-14.36	-112.1	-382.4	368
BOLTING RING	D	-129.5	-97.55	-646.1	22.8	-85.68	-141.3	-646.1	560.4
PRIMARY LID	E	52.95	-204.9	-235.3	3.245	52.99	-205	-235.3	288.3
SECONDARY LID	F	8.261	-9.199	8.261	0	8.261	8.261	-9.199	17.46

GENERAL NOTES: (1) See Table 2-1 for load combinations.
(2) See Figure A2-45 for locations indicated in this table.

TABLE A2-34

MEMBRANE PLUS BENDING STRESSES IN VARIOUS COMPONENTS OF THE CASK

INCREASED EXTERNAL PRESSURE (1)

COMPONENT	LOCATION(2)	STRESS COMPONENTS				PRINCIPAL STRESSES			
		NORMAL RADIAL psi	NORMAL AXIAL psi	NORM HOOP psi	IN-PLANE psi	S1 psi	S2 psi	S3 psi	S.I. psi
BASE PLATE	a	374.9	-15.44	374.9	0	374.9	374.9	-15.44	390.3
	b	-569.2	1.276	-569.2	0	1.276	-569.2	-569.2	570.5
OUTER SHELL	c	48.94	-298.5	-137	-0.8444	48.94	-137	-298.5	347.5
	d	-163.5	421.6	19.34	-0.8444	421.6	19.34	-163.5	585.2
INNER SHELL	e	-482.2	-1182	-491.5	-45.42	-479.2	-491.5	-1184	705.2
	f	-271.2	1129	267.4	-45.42	1130	267.4	-272.7	1403
BOLTING RING	g	33.04	-447.2	-771.8	22.8	34.12	-448.3	-771.8	805.9
	h	-122.1	236.5	-520.3	22.8	238	-123.6	-520.3	758.3
PRIMARY LID	i	-436.8	-262.9	-263.8	-10.93	-262.3	-263.8	-437.5	175.3
	j	542.7	-146.9	-206.7	17.42	543.2	-147.3	-206.7	749.9
SECONDARY LID	L	548.6	-17.2	548.6	0	548.6	548.6	-17.2	565.8
	M	532.1	-1.202	-532.1	0	-1.202	-532.1	-532.1	530.9

GENERAL NOTES: (1) See Table 2-1 for load combinations.
(2) See Figure A2-44 for locations indicated in this table.

TABLE A2-35

MEMBRANE STRESSES IN VARIOUS COMPONENTS OF THE CASK

MINIMUM EXTERNAL PRESSURE(1)

Cask Component	Location(2)	Stress Components, (psi)(3)				Principal Stresses (psi)(3)			S.I.(3) (psi)	S.I.(4) (psi)
		Normal Radial	Normal Axial	Normal Hoop	In-Plane Shear	S_1	S_2	S_3		
Base Plate	A	89.25	-9.535	89.25	0	89.25	89.25	-9.535	98.79	149
Outer Shell	B	2599	147	965.4	759.4	2815	965.4	-69.2	2884	3,145
Inner Shell	C	-2358	1486	-736.9	-962.8	1714	-736.9	-2586	4299	4,606
Bolting Ring	D	217.6	10.68	1258	-53.43	1258	230.6	-2.305	1260	1,375
Primary Lid	E	62.42	-146.5	205.4	-52.78	205.4	74.99	-159.1	364.5	449
Secondary Lid	F	-13.57	-6.44	-13.57	0	-6.44	-13.57	-13.57	7.131	16

GENERAL NOTES:

(1) See Table 2-1 for load combinations.
(2) See Figure A2-45 for locations indicated in this table.
(3) These stresses were calculated with 11.2 psi internal pressure in the cask.
(4) Conservatively the stress intensities corresponding to 19.6 psi cask internal pressure have been added to the stress intensities of the previous column. The stress intensities for 19.6 psi internal pressure are obtained by multiplying the stress intensities of Table A2-37 by a factor of 19.6/10 = 1.96.

TABLE A2-36

MEMBRANE PLUS BENDING STRESSES IN VARIOUS COMPONENTS OF THE CASK
MINIMUM EXTERNAL PRESSURE(1)

Cask Component	Location(2)	Stress Components, (psi)(3)				Principal Stresses (psi)(3)			S.I.(3)	S.I.(4)
		Normal Radial	Normal Axial	Normal Hoop	In-Plane Shear	S_1	S_2	S_3	(psi)	(psi)
Base Plate	a	-727.5	2.208	-727.5	0	2.208	-727.5	-727.5	729.7	1,393
	b	906	-21.28	906	0	906	906	-21.28	927.3	1,691
Outer Shell	c	-3143	2714	1804	759.4	2811	1804	-3240	6051	6,561
	d	1958	-2375	126.8	759.4	2087	126.8	-2504	4592	5,380
Inner Shell	e	-2350	61.87	-1143	-962.8	399.1	-1143	-2687	3086	3,651
	f	-2366	2895	-331	-962.8	3065	-331	-2537	5602	6,295
Bolting Ring	g	-42.39	-152.4	1204	-53.43	1204	-20.71	-174.1	1378	1,574
	h	834.4	166.5	1311	-53.43	1311	838.6	162.2	1149	1,321
Primary Lid	i	-416.2	-218.3	-172.8	-102.2	-172.8	-175	-459.5	286.7	1,128
	j	541	-74.7	583.5	-3.362	583.5	541.1	-74.72	658.3	1,509
Secondary Lid	k	-484.1	1.724	-484.1	0	1.724	-484.1	-484.1	485.8	1,180
	l	457	-14.6	457	0	457	457	-14.6	471.6	1,148

GENERAL NOTES:

(1) See Table 2-1 for load combinations.
(2) See Figure A2-45 for locations indicated in this table.
(3) These stresses were calculated with 11.2 psi internal pressure in the cask.
(4) Conservatively the stress intensities corresponding to 19.6 psi cask internal pressure have been added to the stress intensities of the previous column. The stress intensities for 19.6 psi internal pressure are obtained by multiplying the stress intensities of Table A2-38 by a factor of 19.6/10 = 1.96.

TABLE A2-37

MEMBRANE STRESSES IN VARIOUS COMPONENTS OF THE CASK

INTERNAL PRESSURE OF 10 PSIG(1)

COMPONENT	LOCATION(2)	STRESS COMPONENTS				PRINCIPAL STRESSES			
		NORMAL RADIAL psi	NORMAL AXIAL psi	NORM HOOP psi	IN-PLANE psi	S1 psi	S2 psi	S3 psi	S.I. psi
BASE PLATE	A	19.27	-6.349	19.27	0	19.27	19.27	-6.349	25.62
OUTER SHELL	B	101.2	-32.6	-25.72	-0.2057	101.2	-25.72	-32.6	133.1
INNER SHELL	C	71.04	-5.432	-85.15	6.848	71.64	-6.041	-85.15	156.8
BOLTING RING	D	-9.053	0.1235	48.52	-2.927	48.52	0.9774	-9.907	58.43
PRIMARY LID	E	-12.18	-9.497	-7.057	-21.63	10.83	-7.057	-35.51	43.34
SECONDARY LID	F	-9.96	-5.588	-9.96	0	-5.588	-9.96	-9.96	4.373

GENERAL NOTES: (1) See Table 2-1 for load combinations.
(2) See Figure A2-46 for locations indicated in this table.

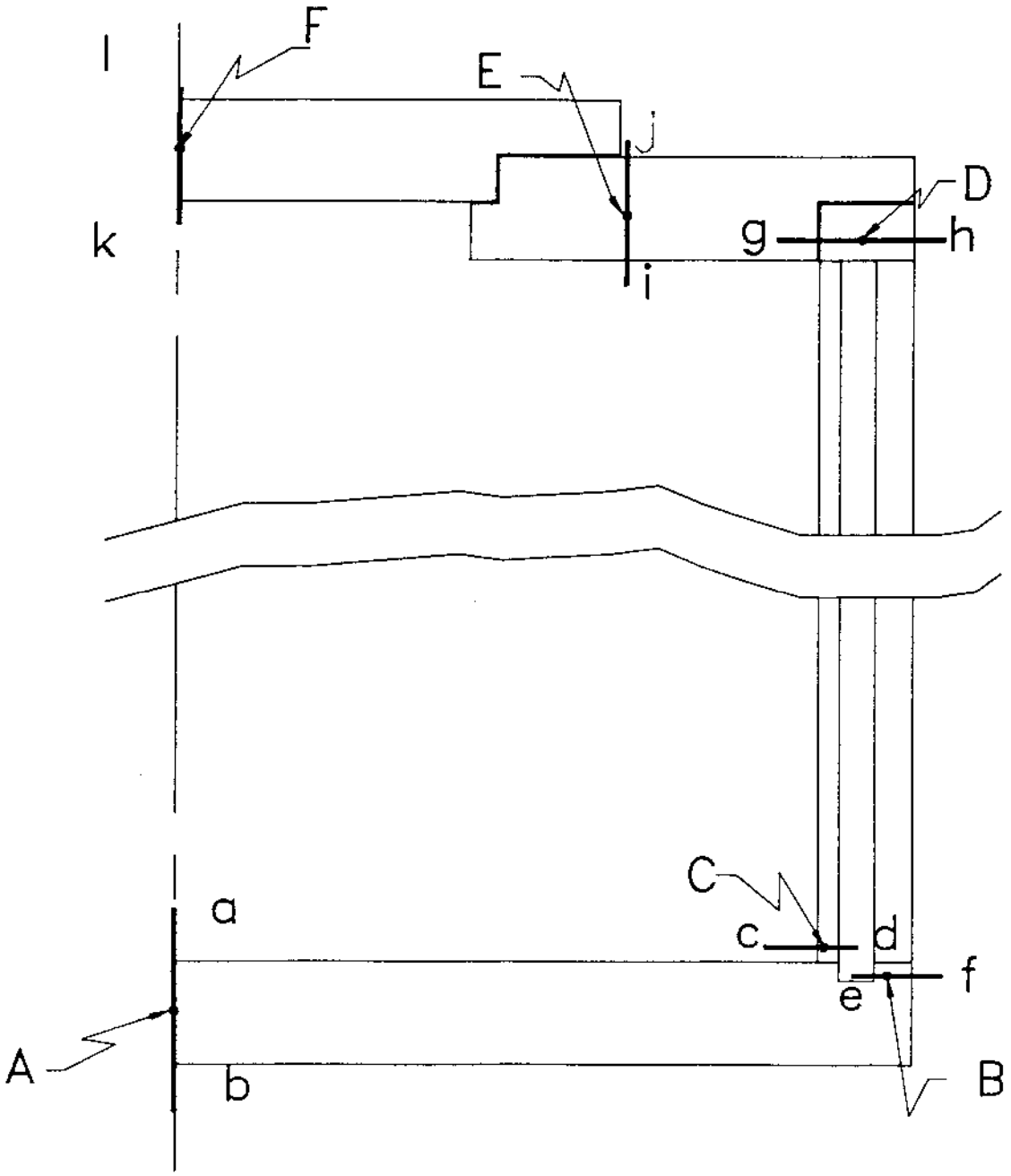

FIGURE A2-46
LOCATIONS OF STRESSES INDICATED
IN TABLES A2-37 THROUGH A2-40

TABLE A2-38

MEMBRANE PLUS BENDING STRESSES IN VARIOUS COMPONENTS OF THE CASK

INTERNAL PRESSURE OF 10 PSIG(1)

COMPONENT	LOCATION(2)	STRESS COMPONENTS				PRINCIPAL STRESSES			
		NORMAL RADIAL psi	NORMAL AXIAL psi	NORM HOOP psi	IN-PLANE psi	S1 psi	S2 psi	S3 psi	S.I. psi
BASE PLATE	a	-339.5	-0.9632	-339.5	0	-0.9632	-339.5	-339.5	338.5
	b	378	-1174	378	0	378	378	-11.74	389.7
OUTER SHELL	c	-5.568	254.8	62.3	-0.2057	254.8	62.3	-5.568	260.4
	d	87.26	-315	-113.7	-0.2057	87.26	-113.7	-315	402.2
INNER SHELL	e	95.42	299	11.1	6.848	299.2	95.19	11.1	288.1
	f	46.65	-306.6	-181.4	6.848	46.78	-181.4	-306.7	353.5
BOLTING RING	g	-27.66	65.85	72.28	-2.927	72.28	65.94	-27.76	100
	h	-22.65	-62.67	24.77	-2.927	24.77	-22.44	-62.88	87.65
PRIMARY LID	i	-235.7	-13.86	-441.1	-21.62	-11.77	-237.8	-441.1	429.3
	j	211.4	-5.134	427	-21.64	427	213.5	-7.275	434.2
SECONDARY LID	k	-354.3	-0.08722	-354.3	0	0.08722	-354.3	-354.3	354.2
	l	334.3	-11.09	334.3	0	334.3	334.3	-11.09	345.1

GENERAL NOTES: (1) See Table 2-1 for load combinations.
(2) See Figure A2-46 for locations indicated in this table.

TABLE A2-39

MEMBRANE STRESSES IN VARIOUS COMPONENTS OF THE CASK

EXTERNAL PRESSURE OF 25 PSIG(1)

COMPONENT	LOCATION(2)	STRESS COMPONENTS				PRINCIPAL STRESSES			
		NORMAL RADIAL psi	NORMAL AXIAL psi	NORM HOOP psi	IN-PLANE psi	S1 psi	S2 psi	S3 psi	S.I. psi
BASE PLATE	A	-71.7	-8.906	-71.7	0	-8.906	-71.7	-71.7	62.79
OUTER SHELL	B	-192.1	75.42	57.71	26.85	78.08	57.71	-194.8	272.8
INNER SHELL	C	-268.3	-100.7	101.2	-45.8	101.2	-89.03	-280	381.1
BOLTING RING	D	-76.11	-110.7	-476.2	14.97	-70.53	116.3	-476.2	405.7
PRIMARY LID	E	19.69	-92.16	-23.26	23.25	24.33	-23.26	-96.8	121.1
SECONDARY LID	F	12.54	-11.45	12.54	0	12.54	12.54	-11.45	23.99

GENERAL NOTES: (1) See Table 2-1 for load combinations.
(2) See Figure A2-46 for locations indicated in this table.

TABLE A2-40

MEMBRANE PLUS BENDING STRESSES IN VARIOUS COMPONENTS OF THE CASK

INTERNAL PRESSURE OF 25 PSIG(1)

COMPONENT	LOCATION(2)	STRESS COMPONENTS				PRINCIPAL STRESSES			
		NORMAL RADIAL psi	NORMAL AXIAL psi	NORM HOOP psi	IN-PLANE psi	S1 psi	S2 psi	S3 psi	S.I. psi
BASE PLATE	a	768.8	-21.91	768.8	0	768.8	768.8	-21.91	790.7
	b	-912.2	4.101	-912.2	0	4.101	-912.2	-912.2	916.3
OUTER SHELL	c	-34.21	-509.6	-120.3	26.85	-32.7	-120.3	-511.1	-478.4
	d	-168	650.3	235.8	26.85	651.1	235.8	-168.8	820
INNER SHELL	e	-334.5	-767.7	113.4	-45.8	-113.4	-329.7	-772.5	659.1
	f	-202	559	315.7	-45.8	561.8	315.7	-204.7	766.5
BOLTING RING	g	49.1	-454.4	-615.1	14.97	49.55	-454.9	-615.1	664.7
	h	-5.376	217.7	-337.3	14.97	218.7	-6.376	-337.3	555.9
PRIMARY LID	i	313.6	-7.549	844.8	21.97	844.8	315.1	-9.045	853.8
	j	-274.2	-176.8	-891.3	24.52	-171	-280	-891.3	720.3
SECONDARY LID	k	728.9	-22.5	728.9	0	728.9	728.9	-22.5	751.4
	l	-703.9	-0.4031	-703.9	0	0.4031	-703.9	-703.9	703.4

GENERAL NOTES: (1) See Table 2-1 for load combinations.
(2) See Figure A2-46 for locations indicated in this table.

TABLE A2-41

MEMBRANE STRESSES IN VARIOUS COMPONENTS OF THE CASK

FIRE ACCIDENT[1]

Cask Component	Location[2]	Stress Components, (psi)[3]				Principal Stresses (psi)[3]			S.I.[3]
		Normal Radial	Normal Axial	Normal Hoop	In-Plane Shear	S_1	S_2	S_3	(psi)
Base Plate	A	-1247	9.867	-1247	0	9.867	-1247	-1247	1257
Outer Shell	B	7851	641	26,850	3030	26,850	8955	-462.9	27,310
Inner Shell	C	7979	3739	34,410	-7996	34,410	14,130	-2414	36,830
Bolting Ring	D	11,360	3172	27,590	-1496	27,590	11,630	2907	24,680
Primary Lid	E	-640.0	1622	7537	-3047	7537	3741	-2760	10,300
Secondary Lid	F	-931.2	-1813	5585	-391.9	5585	-782.2	-1962	7547

GENERAL NOTES:

(1) See Table 2-1 for load combinations.
(2) See Figure A2-48 for locations indicated in this table.
(3) These stresses were calculated with 7.3 psi internal pressure in the cask. For a conservative estimate of fire accident stresses with 3.12 psi internal pressure please see Attachment 5 of this SAR.

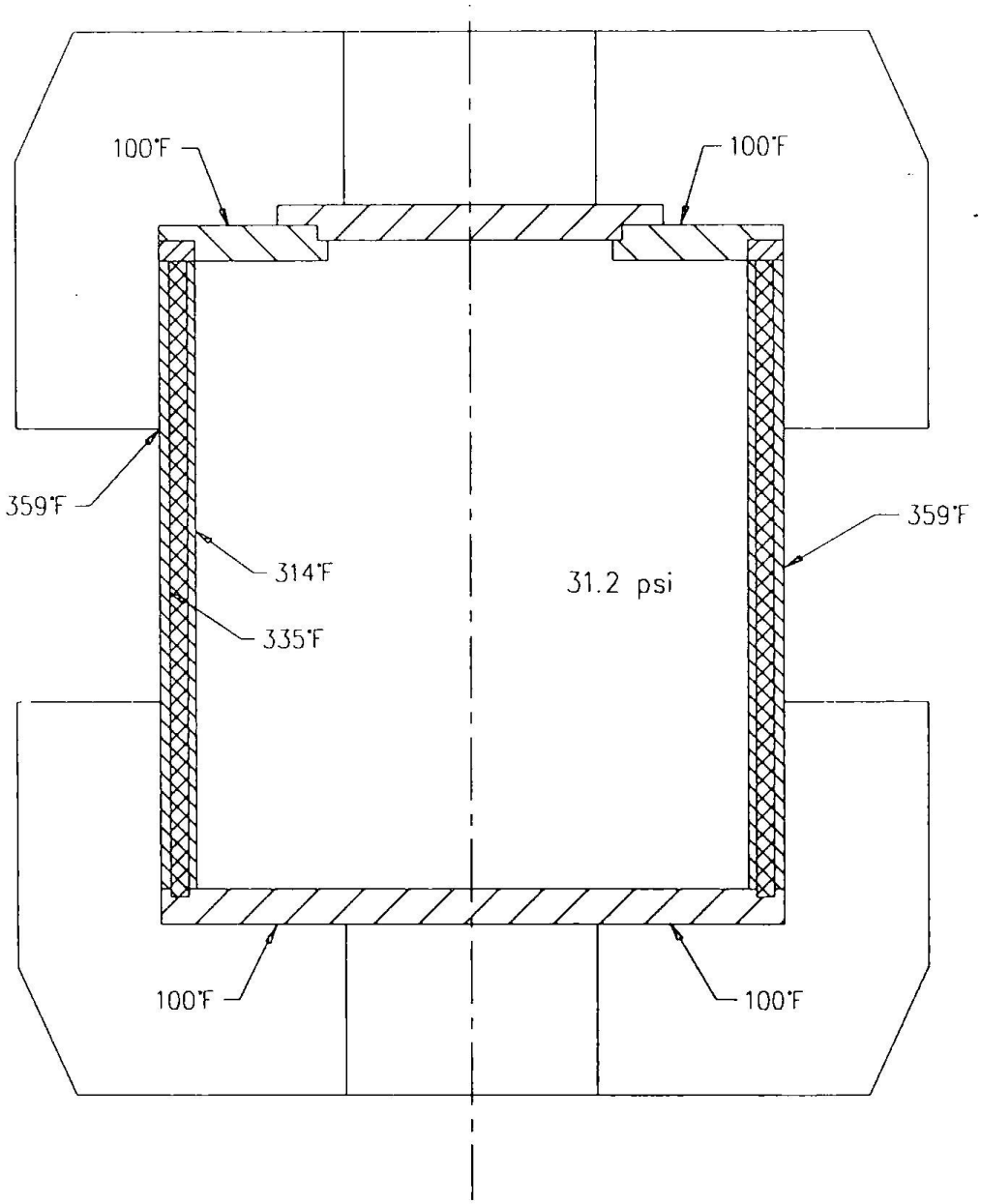

Figure A2-47
Fire Accident Temperature Distribution

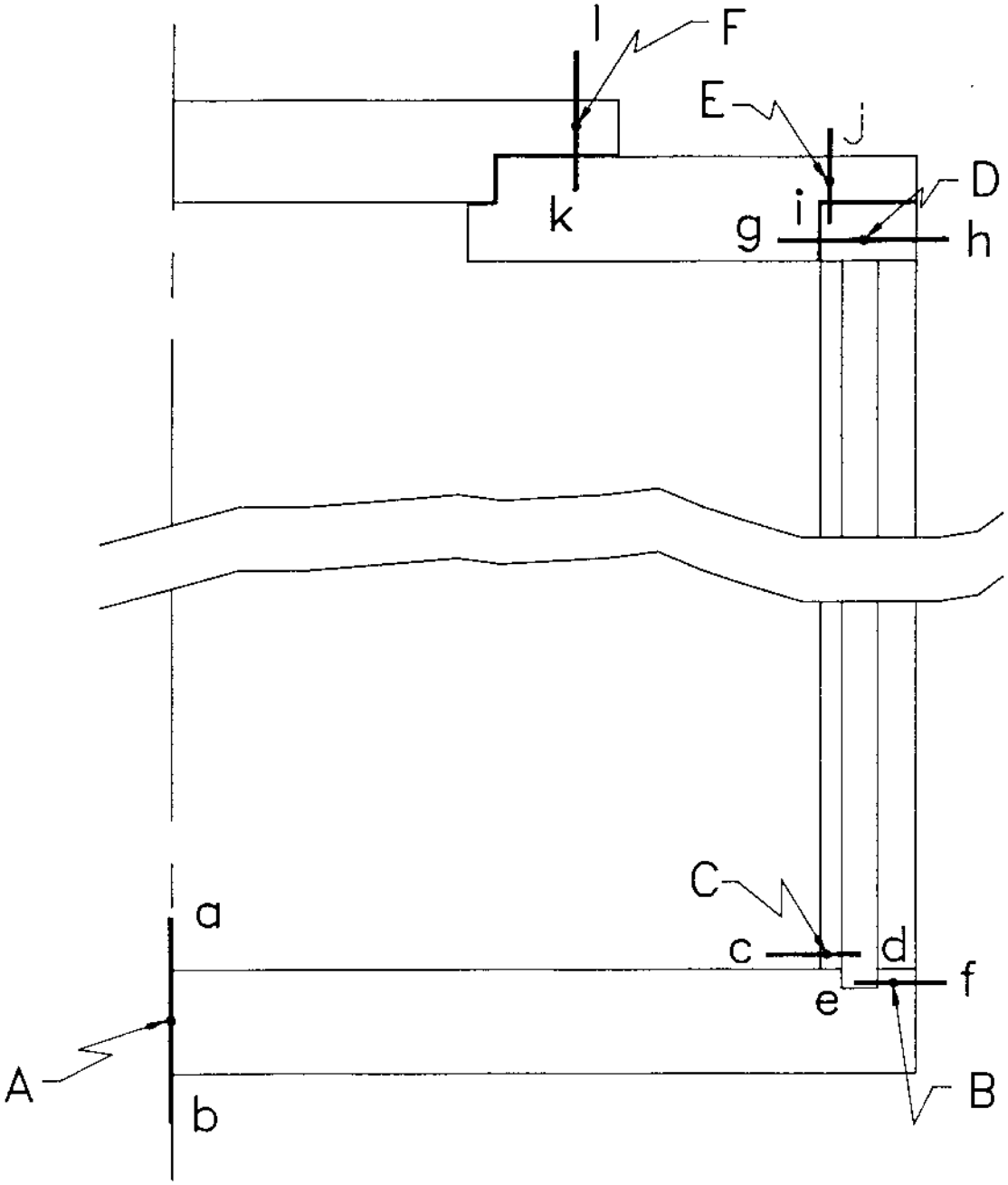

Figure A2-48
Fire Accident
Locations of Stresses Indicated
Tables A2-41 and A2-42

TABLE A2-42
MEMBRANE PLUS BENDING STRESSES IN VARIOUS COMPONENTS OF THE CASK FIRE ACCIDENT[1]

Cask Component	Location[2]	Stress Components, (psi)[3]				Principal Stresses (psi)[3]			S.I.[3]
		Normal Radial	Normal Axial	Normal Hoop	In-Plane Shear	S_1	S_2	S_3	(psi)
Base Plate	a	-6210	106.9	-6210	0	106.9	-6210	-6210	6317
	b	3715	-87.19	3715	0	3715	3715	-87.19	3802
Outer Shell	c	-4871	18,440	32,250	3030	32,250	18,820	-5258	37,510
	d	7230	-16,840	21,440	3030	21,440	7606	-17,220	38,660
Inner Shell	e	13,450	-18,260	25,900	-7996	25,900	15,350	-20,160	46,070
	f	2511	25,500	42,930	-7996	42,930	28,010	3.147	42,920
Bolting Ring	g	-1907	-2839	26,470	-1496	26,470	-806.1	-3941	30,410
	h	5348	8916	28,710	-1496	28,710	9460	4803	23,900
Primary Lid	i	-13,540	1793	10,690	-3961	10,690	2756	-14,500	25,190
	j	12,260	1451	4384	-2134	12,660	4384	1045	11,620
Secondary Lid	k	-2609	-948	14,470	-468.5	14,470	-825	-2732	17,200
	l	746.6	-2678	-3296	-315.3	775.4	-2707	-3296	4072

GENERAL NOTES:

(1) See Table 2-1 for load combinations.
(2) See Figure A2-48 for locations indicated in this table.
(3) These stresses were calculated with 7.3 psi internal pressure in the cask. For a conservative estimate of fire accident stresses with 3.12 psi internal pressure please see Attachment 5 of this SAR.

2.10.4 References for Chapter 2

1. US NRC Code of Federal Regulations, Title 10, Part 71.

2. US NRC Regulatory Guide 7.6, "Design Criteria for the Structural Analysis of Shipping Cask Containment Vessels.

3. US NRC Regulatory Guide 7.8, "Load Combinations for the Structural Analysis of Shipping Casks."

4. NUREG/CR 1815, "Recommendations for Protecting Against Failure By Brittle Fracture in Ferritic Steel Shipping Containers up to Four Inches Thick."

5. Roark and Young, "Formulas for Stress and Strain," Fifth Edition.

6. Baker, Kovalevsky, Rish, "Structural Analysis of Shells" 1972.

7. None.

8. Swanson Analysis Systems, Inc. "ANSYS Engineering Analysis User's Manual," March 1983.

9. None.

10. Safety Analysis Report for Chem-Nuclear Systems, Inc., Model CNS 8-120B Type B Radwaste Shipping Cask, Revision 2, March 1984.

11. Timoshenko and Goodier, "Theory of Elasticity," Third Edition, 1970.

12. Wichman, Hopper and Mershon, "Local Stresses in Spherical and Cylindrical Shells due to External Loadings," Welding Research Council Bulletin No. 107, March 1979.

13. CASKDROP Users Manual.

14. CASKDROP Technical Manual.

15. CASKDROP Verification Manual.

16. CORNVT Program Documentation

17. PAYLOAD Program Documentation.

18. None

19. Swanson Analysis Systems, Inc., "ANSYS Theoretical Manual."

20. None

21. None.

22. None.

23. ASME Boiler and Pressure Vessel Code, Section III.

24. Timoshenko, S. and Woinowsky-Krieger, S; Theory of Plates & Shells, Second Edition, McGraw Hill Book Company, 1959.

25. An Assessment of Stress-Strain Data Suitable for Finite Element Elastic-Plastic Analysis for Shipping Containers," NUREG/CR-0481, SAND77-1972.

Attachment 1

PRINT-OUT OF THE CASKDROP PROGRAM OUTPUT
OF 10-160B CASK
FOR 30-FOOT DROP CONDITIONS

CHEM-NUCLEAR SYSTEMS, INC.
220 STONERIDGE DRIVE
COLUMBIA, SC 29210

IN-HOUSE PROGRAM OUTPUT COVER SHEET

```
*****************************************************
*                                                   *
*                                                   *
*            PROGRAM NAME  :  CASKDROP              *
*                                                   *
*                                                   *
*             DROP ORIENTATION :  END               *
*                                                   *
*                                                   *
*              REVISION NO.  :  2.0                 *
*                                                   *
*                                                   *
*            ISSUE DATE    :  09/13/88              *
*                                                   *
*                                                   *
*  APPROVED FOR SAFETY RELATED CALCULATIONS : YES   *
*                                                   *
*                                                   *
*     PROGRAM EXECUTION DATE :  05-31-1989          *
*                                                   *
*                                                   *
*     PROGRAM EXECUTION TIME :  10:07:43            *
*                                                   *
*                                                   *
*****************************************************
```

NOTE: DOCUMENTATIONS FOR THIS PROGRAM (INCLUDING THE REVISIONS) REQUIRED PER CNSI DESIGN CONTROL PROCEDURE EN-AD-002 ARE FILED WITH THE DOCUMENTATION CONTROLS.

```
05-31-1989 10:07:43
C A S K   G E O M E T R Y
   End Drop Analysis
Cask:10-160B  10-160B CASKDROP                                G= 386.4  in/sec^2
>>>>>>>>> Package uses correction factor table:  NRC
Weight              (lb) W     72000
Outer diamter       (in) POD   78
Length              (in) LC    88
Drop height         (ft) H     30
CG (cask btm)       (in) LCG   44
Moment of Inertia        ICG   0                    (LB SEC^2 INCHES)
Ovp materials: Top: FR6725H  Bottom:
Upper     Lower  (All values in inches)
Inner diameter  (in) OID                47.5       47.5
Outer diameter  (in) OOD                102        102
Inner thickness (in) LI                 21         21
Outer thickness (in) LO                 44         44
05-31-1989 10:07:43
C A S K   D R O P   R E S U L T S
   End Drop Analysis
METHOD  1
Cask:10-160B  10-160B CASKDROP    Overpack:FR6725H  upper
   ============Iteration   Time     Deflection  Acc     Force     E(abs)
Projection           15     .010        3.0    %-175.7   6305453.   26146800.
Overpack              0     .000        0.0      0.0   6415806.          0.
Correction factors
 1 : 1     2 : 1     3 : 1     4 : 1     5 : 0
 6 : 1     7 : 1     8 : 1     9 : 1     10 : 1
 11 : 1     12 : 1     13 : 1     14 : 1     15 : 0

MAXIMUM ALLOWABLE STRAIN TOP    100

TOP MATERIAL   FR6725H   STRAIN VS. STRESS
  STRAIN(%)    STRESS(PSI)     STRAIN(%)    STRESS(PSI)
      1             429           51           3784
      2             792           52           3938
      3            1155           53           4092
      4            1430           54           4246
      5            1650           55           4400
      6            1760           56           4620
      7            1925           57           4840
      8            1980           58           5060
      9            2007           59           5280
     10            2035           60           5500
     11            2050           61           5819
     12            2064           62           6138
     13            2079           63           6457
     14            2094           64           6776
     15            2108           65           7095
     16            2123           66           7744
     17            2138           67           8393
     18            2152           68           9042
     19            2167           69           9691
     20            2182           70          10340
     21            2196           71          11682
     22            2211           72          13024
     23            2226           73          14366
     24            2240           74          15708
     25            2255           75          17050
```

26	2288	76	60368
27	2321	77	103686
28	2354	78	147004
29	2387	79	190322
30	2420	80	233640
31	2453	81	276958
32	2486	82	320276
33	2519	83	363594
34	2552	84	406912
35	2585	85	450230
36	2618	86	493548
37	2651	87	536865
38	2684	88	580183
39	2717	89	623501
40	2750	90	666819
41	2816	91	710137
42	2882	92	753455
43	2948	93	796773
44	3014	94	840091
45	3080	95	883409
46	3190	96	926727
47	3300	97	970045
48	3410	98	%1013363
49	3520	99	%1056681
50	3630	100	%1099999

ITER	TIME	DEFL	STN(Pro)	STN(Ovr)	V	ACC	F(PROJ)	F(OVER)
1	.0000	0.0	0.0	0.0	527.5	0.0	0.	0.
2	.0004	0.2	1.0	0.5	525.4	-27.0	1289705.	727781.
3	.0008	0.4	2.0	1.0	519.3	-52.3	2380994.	1455561.
4	.0012	0.6	3.0	1.4	509.3	-74.3	3472283.	1948213.
5	.0016	0.8	4.0	1.9	495.7	-94.3	4299018.	2564028.
6	.0021	1.0	5.0	2.4	478.5	%-112.1	4960402.	3179842.
7	.0025	1.3	6.0	2.9	457.9	%-125.2	5291096.	3795657.
8	.0030	1.5	7.0	3.3	434.0	%-137.7	5787137.	4198736.
9	.0035	1.7	8.0	3.8	406.6	%-146.5	5952484.	4665262.
10	.0040	1.9	9.0	4.3	375.5	%-153.3	6035157.	5075805.
11	.0046	2.1	10.0	4.8	340.0	%-159.7	6117831.	5449024.
12	.0053	2.3	11.0	5.3	298.9	%-163.9	6161921.	5710278.
13	.0060	2.5	12.0	5.7	250.1	%-166.6	6206018.	5859567.
14	.0070	2.7	13.0	6.2	187.6	%-170.3	6250108.	6083499.
15	.0085	2.9	14.0	6.7	84.8	%-174.8	6294199.	6363415.
16	.0000	3.2	15.0	7.2	0.0	%-178.3	6338295.	6568687.

CHEM-NUCLEAR SYSTEMS, INC.
220 STONERIDGE DRIVE
COLUMBIA, SC 29210

IN-HOUSE PROGRAM OUTPUT COVER SHEET

```
*****************************************************
*                                                   *
*                                                   *
*              PROGRAM NAME  :  CASKDROP            *
*                                                   *
*                                                   *
*               DROP ORIENTATION : SIDE             *
*                                                   *
*                                                   *
*                REVISION NO.  :  2.0               *
*                                                   *
*                                                   *
*              ISSUE DATE    :  09/13/88            *
*                                                   *
*                                                   *
*  APPROVED FOR SAFETY RELATED CALCULATIONS : YES   *
*                                                   *
*                                                   *
*     PROGRAM EXECUTION DATE :  05-31-1989          *
*                                                   *
*                                                   *
*     PROGRAM EXECUTION TIME :  11:59:43            *
*                                                   *
*                                                   *
*****************************************************
```

NOTE: DOCUMENTATIONS FOR THIS PROGRAM (INCLUDING THE REVISIONS) REQUIRED PER CNSI DESIGN CONTROL PROCEDURE EN-AD-002 ARE FILED WITH THE DOCUMENTATION CONTROLS.

```
05-31-1989 11:59:43
C A S K   G E O M E T R Y
   Side Drop Analysis
Cask:10-160B  10-160B CASKDROP                                  G= 386.4  in/sec^2
>>>>>>>>> Package uses correction factor table:  BACKED
Weight              (lb) W     72000
Outer diamter       (in) POD   78
Length              (in) LC    88
Drop height         (ft) H     30
CG (cask btm)       (in) LCG   44
Moment of Inertia        ICG   0                    (LB SEC^2 INCHES)
Ovp materials: Top: FR6725H   Bottom: FR6725H
Upper     Lower  (All values in inches)
Inner diameter  (in) OID                47.5      47.5
Outer diameter  (in) OOD                102.001   102.001
Inner thickness (in) LI                 21.012    21.012
Outer thickness (in) LO                 44.01     44.01
05-31-1989 11:59:43
C A S K   D R O P   R E S U L T S
   Side Drop Analysis
METHOD  1
Cask:10-160B  10-160B CASKDROP    Overpacks:FR6725H  & FR6725H
****DATA EXTRAPOLATED AFTER  65  % &  65 %****
        Iteration     Time   Deflection   Acc      Force      E(abs)
 Top         45     0.0166     5.3959   -120.6     4379012.   13154409.
 Bottom                        5.3959   -120.6     4379012.   13154409.
 Combined                                -120.6     8758024.   26308818.
Correction factors
 1 : 1     2 : 1     3 : 1     4 : 1     5 : 1
 6 : 1     7 : 1     8 : 1     9 : 1     10 : 1
 11 : 1     12 : 1     13 : 1     14 : 1     15 : 1

FRICTION FACTOR                          1000000
MAXIMUM ALLOWABLE STRAIN TOP             100
MAXIMUM ALLOWABLE STRAIN BOTTOM          100
MAXIMUM ALLOWABLE SHEAR STRESS TOP       1000000
MAXIMUM ALLOWABLE SHEAR STRESS BOTTOM    1000000

TOP MATERIAL   FR6725H    STRAIN VS. STRESS
  STRAIN(%)    STRESS(PSI)     STRAIN(%)    STRESS(PSI)
      1             429           51           3784
      2             792           52           3938
      3            1155           53           4092
      4            1430           54           4246
      5            1650           55           4400
      6            1760           56           4620
      7            1925           57           4840
      8            1980           58           5060
      9            2007           59           5280
     10            2035           60           5500
     11            2050           61           5819
     12            2064           62           6138
     13            2079           63           6457
     14            2094           64           6776
     15            2108           65           7095
     16            2123           66           7744
     17            2138           67           8393
     18            2152           68           9042
     19            2167           69           9691
```

20	2182	70	10340
21	2196	71	11682
22	2211	72	13024
23	2226	73	14366
24	2240	74	15708
25	2255	75	17050
26	2288	76	60368
27	2321	77	103686
28	2354	78	147004
29	2387	79	190322
30	2420	80	233640
31	2453	81	276958
32	2486	82	320276
33	2519	83	363594
34	2552	84	406912
35	2585	85	450230
36	2618	86	493548
37	2651	87	536865
38	2684	88	580183
39	2717	89	623501
40	2750	90	666819
41	2816	91	710137
42	2882	92	753455
43	2948	93	796773
44	3014	94	840091
45	3080	95	883409
46	3190	96	926727
47	3300	97	970045
48	3410	98	%1013363
49	3520	99	%1056681
50	3630	100	%1099999

BOTTOM MATERIAL FR6725K STRAIN VS. STRESS

STRAIN(%)	STRESS(PSI)	STRAIN(%)	STRESS(PSI)
1	429	51	3784
2	792	52	3938
3	1155	53	4092
4	1430	54	4246
5	1650	55	4400
6	1760	56	4620
7	1925	57	4840
8	1980	58	5060
9	2007	59	5280
10	2035	60	5500
11	2050	61	5819
12	2064	62	6138
13	2079	63	6457
14	2094	64	6776
15	2108	65	7095
16	2123	66	7744
17	2138	67	8393
18	2152	68	9042
19	2167	69	9691
20	2182	70	10340
21	2196	71	11682
22	2211	72	13024
23	2226	73	14366
24	2240	74	15708
25	2255	75	17050
26	2288	76	60368
27	2321	77	103686

28	2354	78	147004
29	2387	79	190322
30	2420	80	233640
31	2453	81	276958
32	2486	82	320276
33	2519	83	363594
34	2552	84	406912
35	2585	85	450230
36	2618	86	493548
37	2651	87	536865
38	2684	88	580183
39	2717	89	623501
40	2750	90	666819
41	2816	91	710137
42	2882	92	753455
43	2948	93	796773
44	3014	94	840091
45	3080	95	883409
46	3190	96	926727
47	3300	97	970045
48	3410	98	%1013363
49	3520	99	%1056681
50	3630	100	%1099999

TIME	DEFL(top)	DEFL(btm)	V @ CG	ACC @ CG	F(comb)
.0000	0.0	0.0	527.5	0.0	0.
.0002	0.1	0.1	527.5	-0.3	94211.
.0005	0.2	0.2	527.3	-3.1	293583.
.0007	0.4	0.4	526.9	-6.8	560615.
.0009	0.5	0.5	526.1	-11.0	866906.
.0011	0.6	0.6	525.0	-15.3	1176318.
.0014	0.7	0.7	523.4	-19.7	1491541.
.0016	0.8	0.8	521.5	-24.0	1796547.
.0018	1.0	1.0	519.1	-28.1	2094643.
.0021	1.1	1.1	516.5	-32.0	2376477.
.0023	1.2	1.2	513.4	-35.7	2642232.
.0025	1.3	1.3	510.0	-39.2	2896176.
.0028	1.4	1.4	506.3	-42.6	3136998.
.0030	1.6	1.6	502.2	-45.7	3362364.
.0032	1.7	1.7	497.8	-48.8	3582051.
.0035	1.8	1.8	493.1	-51.8	3799395.
.0037	1.9	1.9	488.1	-54.8	4014254.
.0040	2.0	2.0	482.7	-57.6	4220877.
.0042	2.2	2.2	477.0	-60.3	4414648.
.0045	2.3	2.3	471.0	-62.9	4603852.
.0047	2.4	2.4	464.6	-65.4	4783334.
.0050	2.5	2.5	457.9	-67.9	4959791.
.0053	2.6	2.6	450.9	-70.2	5129559.
.0055	2.8	2.8	443.5	-72.6	5297762.
.0058	2.9	2.9	435.7	-74.8	5458872.
.0061	3.0	3.0	427.6	-77.0	5618734.
.0064	3.1	3.1	419.0	-79.3	5778392.
.0067	3.2	3.2	410.0	-81.5	5937791.
.0069	3.4	3.4	400.6	-83.7	6098054.
.0073	3.5	3.5	390.6	-85.9	6256228.
.0076	3.6	3.6	380.2	-88.1	6412532.
.0079	3.7	3.7	369.1	-90.2	6568808.
.0082	3.8	3.8	357.5	-92.4	6723579.
.0086	4.0	4.0	345.1	-94.6	6880267.
.0089	4.1	4.1	332.0	-96.7	7036173.
.0093	4.2	4.2	318.1	-98.8	7186309.

.0097	4.3	4.3	303.2	-100.9	7339095.
.0101	4.4	4.4	287.2	-103.1	7493625.
.0105	4.6	4.6	269.8	-105.2	7647388.
.0110	4.7	4.7	250.9	-107.3	7797918.
.0115	4.8	4.8	230.0	-109.4	7947825.
.0120	4.9	4.9	206.5	-111.5	8101393.
.0126	5.0	5.0	179.5	-113.7	8261784.
.0134	5.2	5.2	146.8	-116.1	8428209.
.0143	5.3	5.3	103.4	-118.4	8595967.
.0000	5.4	5.4	0.0	-120.7	8764109.

05-31-1989 11:59:44
FORCE DISTRIBUTION: SIDE DROP, TOP
CASK 10-160B
FORCE
STRESS

J	X(J)	FI(J)	FIH(J)	SIG(J)	SIG.H(J)
2	1.748	244493.	159749.	3040.	2174.
3	4.219	98436.	65815.	2961.	2167.
4	5.496	73549.	50206.	2889.	2158.
5	6.515	60338.	42106.	2816.	2151.
6	7.391	51758.	36904.	2747.	2144.
7	8.170	46092.	33190.	2710.	2136.
8	8.879	41743.	30341.	2674.	2127.
9	9.534	38257.	28093.	2638.	2120.
10	10.145	35373.	26247.	2601.	2113.
11	10.719	32930.	24694.	2565.	2105.
12	11.263	30822.	23363.	2529.	2098.
13	11.781	29013.	22204.	2496.	2091.
14	12.276	27372.	21184.	2460.	2083.
15	12.750	25902.	20274.	2423.	2076.
16	13.206	24607.	19457.	2390.	2069.
17	13.646	23395.	18731.	2354.	2063.

05-31-1989 11:59:44
FORCE DISTRIBUTION: SIDE DROP, TOP
CASK 10-160B
FORCE
STRESS

J	X(J)	FI(J)	FIH(J)	SIG(J)	SIG.H(J)
18	14.071	22315.	18056.	2321.	2056.
19	14.483	21321.	17438.	2288.	2048.
20	14.882	20386.	16880.	2254.	2042.
21	15.270	19690.	16352.	2239.	2035.
22	15.647	19042.	15811.	2224.	2021.
23	16.015	18437.	15326.	2210.	2010.
24	16.373	17869.	14851.	2195.	1996.
25	16.723	17335.	14424.	2180.	1985.
26	17.065	16832.	13944.	2166.	1963.
27	17.399	16356.	13489.	2151.	1941.
28	17.727	15904.	12982.	2136.	1908.
29	18.047	15476.	12280.	2122.	1842.
30	18.361	15078.	11500.	2108.	1760.
31	18.669	14689.	11000.	2094.	1716.
32	18.971	14328.	10520.	2080.	1672.
33	19.268	13972.	9924.	2066.	1606.

05-31-1989 11:59:44
FORCE DISTRIBUTION: SIDE DROP, TOP
CASK 10-160B
FORCE
STRESS

J	X(J)	FI(J)	FIH(J)	SIG(J)	SIG.H(J)

34	19.560	13641.	9217.	2053.	1518.
35	19.846	13314.	8536.	2038.	1430.
36	20.128	12952.	7749.	2016.	1320.
37	20.405	12587.	6989.	1991.	1210.
38	20.678	12149.	6360.	1952.	1119.
39	20.946	11390.	5449.	1859.	973.
40	21.211	10422.	4567.	1727.	828.
41	21.471	9550.	3908.	1606.	719.
42	21.728	8220.	3075.	1402.	574.
43	21.981	6674.	2456.	1155.	465.
44	22.231	4720.	1787.	828.	343.
45	22.477	2820.	881.	502.	172.

05-31-1989 11:59:44
FORCE DISTRIBUTION: SIDE DROP, BOTTOM
CASK 10-160B
FORCE
STRESS

J	X(J)	FI(J)	FIH(J)	SIG(J)	SIG.H(J)
2	1.748	244493.	159749.	3040.	2174.
3	4.219	98436.	65815.	2961.	2167.
4	5.496	73549.	50206.	2889.	2158.
5	6.515	60338.	42106.	2816.	2151.
6	7.391	51758.	36904.	2747.	2144.
7	8.170	46092.	33190.	2710.	2136.
8	8.879	41743.	30341.	2674.	2127.
9	9.534	38257.	28093.	2638.	2120.
10	10.145	35373.	26247.	2601.	2113.
11	10.719	32930.	24694.	2565.	2105.
12	11.263	30822.	23363.	2529.	2098.
13	11.781	29013.	22204.	2496.	2091.
14	12.276	27372.	21184.	2460.	2083.
15	12.750	25902.	20274.	2423.	2076.
16	13.206	24607.	19457.	2390.	2069.
17	13.646	23395.	18731.	2354.	2063.

05-31-1989 11:59:44
FORCE DISTRIBUTION: SIDE DROP, BOTTOM
CASK 10-160B
FORCE
STRESS

J	X(J)	FI(J)	FIH(J)	SIG(J)	SIG.H(J)
18	14.071	22315.	18056.	2321.	2056.
19	14.483	21321.	17438.	2288.	2048.
20	14.882	20386.	16880.	2254.	2042.
21	15.270	19690.	16352.	2239.	2035.
22	15.647	19042.	15811.	2224.	2021.
23	16.015	18437.	15326.	2210.	2010.
24	16.373	17869.	14851.	2195.	1996.
25	16.723	17335.	14424.	2180.	1985.
26	17.065	16832.	13944.	2166.	1963.
27	17.399	16356.	13489.	2151.	1941.
28	17.727	15904.	12982.	2136.	1908.
29	18.047	15476.	12280.	2122.	1842.
30	18.361	15078.	11500.	2108.	1760.
31	18.669	14689.	11000.	2094.	1716.
32	18.971	14328.	10520.	2080.	1672.
33	19.268	13972.	9924.	2066.	1606.

05-31-1989 11:59:44
FORCE DISTRIBUTION: SIDE DROP, BOTTOM
CASK 10-160B
FORCE

STRESS

J	X(J)	FI(J)	FIH(J)	SIG(J)	SIG.H(J)
34	19.560	13641.	9217.	2053.	1518.
35	19.846	13314.	8536.	2038.	1430.
36	20.128	12952.	7749.	2016.	1320.
37	20.405	12587.	6989.	1991.	1210.
38	20.678	12149.	6360.	1952.	1119.
39	20.946	11390.	5449.	1859.	973.
40	21.211	10422.	4567.	1727.	828.
41	21.471	9550.	3908.	1606.	719.
42	21.728	8220.	3075.	1402.	574.
43	21.981	6674.	2456.	1155.	465.
44	22.231	4720.	1787.	828.	343.
45	22.477	2820.	881.	502.	172.

05-31-1989 11:59:45
NORMAL AND SHEAR STRESS DISTRIBUTION: SIDE DROP, TOP
CASK 10-160B

J	X(J)	NORMAL NF(J)	SHEAR SF(J)	FOOT AREA	STRAIN(top)	STRAIN(btm)
1	0.000	0.	0.	0.00	0.	0.
2	1.748	3037.	136.	80.41	44.	44.
3	4.219	2944.	320.	33.24	43.	43.
4	5.496	2860.	407.	25.46	42.	42.
5	6.515	2776.	470.	21.43	41.	41.
6	7.391	2697.	521.	18.84	40.	40.
7	8.170	2650.	568.	17.01	39.	39.
8	8.879	2604.	609.	15.61	38.	38.
9	9.534	2558.	645.	14.50	37.	37.
10	10.145	2512.	677.	13.60	36.	36.
11	10.719	2466.	705.	12.84	34.	34.
12	11.263	2421.	730.	12.19	33.	33.
13	11.781	2379.	754.	11.62	32.	32.
14	12.276	2335.	774.	11.13	31.	31.
15	12.750	2290.	792.	10.69	30.	30.
16	13.206	2249.	809.	10.29	29.	29.

05-31-1989 11:59:45
NORMAL AND SHEAR STRESS DISTRIBUTION: SIDE DROP, TOP
CASK 10-160B

J	X(J)	NORMAL NF(J)	SHEAR SF(J)	FOOT AREA	STRAIN(top)	STRAIN(btm)
17	13.646	2205.	824.	9.94	28.	28.
18	14.071	2165.	837.	9.61	27.	27.
19	14.483	2124.	850.	9.32	26.	26.
20	14.882	2083.	860.	9.05	25.	25.
21	15.270	2060.	877.	8.79	24.	24.
22	15.647	2037.	892.	8.56	23.	23.
23	16.015	2015.	907.	8.34	22.	22.
24	16.373	1992.	921.	8.14	21.	21.
25	16.723	1970.	935.	7.95	20.	20.
26	17.065	1947.	948.	7.77	19.	19.
27	17.399	1925.	960.	7.60	18.	18.
28	17.727	1903.	971.	7.45	17.	17.
29	18.047	1881.	982.	7.29	16.	16.
30	18.361	1860.	993.	7.15	15.	15.
31	18.669	1838.	1002.	7.02	14.	14.
32	18.971	1818.	1012.	6.89	13.	13.

05-31-1989 11:59:45
NORMAL AND SHEAR STRESS DISTRIBUTION: SIDE DROP, TOP
CASK 10-160B

NORMAL SHEAR FOOT

J	X(J)	NF(J)	SF(J)	AREA	STRAIN(top)	STRAIN(btm)
33	19.268	1796.	1021.	6.76	12.	12.
34	19.560	1776.	1029.	6.65	11.	11.
35	19.846	1754.	1037.	6.53	10.	10.
36	20.128	1727.	1040.	6.43	9.	9.
37	20.405	1697.	1042.	6.32	8.	8.
38	20.678	1655.	1035.	6.22	8.	8.
39	20.946	1568.	998.	6.13	7.	7.
40	21.211	1449.	939.	6.03	6.	6.
41	21.471	1341.	884.	5.95	5.	5.
42	21.728	1165.	781.	5.86	4.	4.
43	21.981	954.	651.	5.78	3.	3.
44	22.231	681.	472.	5.70	2.	2.
45	22.477	410.	289.	5.62	1.	1.

05-31-1989 11:59:45
NORMAL AND SHEAR STRESS DISTRIBUTION: SIDE DROP, BOTTOM
CASK 10-160B

J	X(J)	NORMAL NF(J)	SHEAR SF(J)	FOOT AREA	STRAIN(top)	STRAIN(btm)
1	0.000	0.	0.	0.00	0.	0.
2	1.748	3037.	136.	80.41	44.	44.
3	4.219	2944.	320.	33.24	43.	43.
4	5.496	2860.	407.	25.46	42.	42.
5	6.515	2776.	470.	21.43	41.	41.
6	7.391	2697.	521.	18.84	40.	40.
7	8.170	2650.	568.	17.01	39.	39.
8	8.879	2604.	609.	15.61	38.	38.
9	9.534	2558.	645.	14.50	37.	37.
10	10.145	2512.	677.	13.60	36.	36.
11	10.719	2466.	705.	12.84	34.	34.
12	11.263	2421.	730.	12.19	33.	33.
13	11.781	2379.	754.	11.62	32.	32.
14	12.276	2335.	774.	11.13	31.	31.
15	12.750	2290.	792.	10.69	30.	30.
16	13.206	2249.	809.	10.29	29.	29.

05-31-1989 11:59:45
NORMAL AND SHEAR STRESS DISTRIBUTION: SIDE DROP, BOTTOM
CASK 10-160B

J	X(J)	NORMAL NF(J)	SHEAR SF(J)	FOOT AREA	STRAIN(top)	STRAIN(btm)
17	13.646	2205.	824.	9.94	28.	28.
18	14.071	2165.	837.	9.61	27.	27.
19	14.483	2124.	850.	9.32	26.	26.
20	14.882	2083.	860.	9.05	25.	25.
21	15.270	2060.	877.	8.79	24.	24.
22	15.647	2037.	892.	8.56	23.	23.
23	16.015	2015.	907.	8.34	22.	22.
24	16.373	1992.	921.	8.14	21.	21.
25	16.723	1970.	935.	7.95	20.	20.
26	17.065	1947.	948.	7.77	19.	19.
27	17.399	1925.	960.	7.60	18.	18.
28	17.727	1903.	971.	7.45	17.	17.
29	18.047	1881.	982.	7.29	16.	16.
30	18.361	1860.	993.	7.15	15.	15.
31	18.669	1838.	1002.	7.02	14.	14.
32	18.971	1818.	1012.	6.89	13.	13.

05-31-1989 11:59:45
NORMAL AND SHEAR STRESS DISTRIBUTION: SIDE DROP, BOTTOM
CASK 10-160B

NORMAL SHEAR FOOT

J	X(J)	NF(J)	SF(J)	AREA	STRAIN(top)	STRAIN(btm)
33	19.268	1796.	1021.	6.76	12.	12.
34	19.560	1776.	1029.	6.65	11.	11.
35	19.846	1754.	1037.	6.53	10.	10.
36	20.128	1727.	1040.	6.43	9.	9.
37	20.405	1697.	1042.	6.32	8.	8.
38	20.678	1655.	1035.	6.22	8.	8.
39	20.946	1568.	998.	6.13	7.	7.
40	21.211	1449.	939.	6.03	6.	6.
41	21.471	1341.	884.	5.95	5.	5.
42	21.728	1165.	781.	5.86	4.	4.
43	21.981	954.	651.	5.78	3.	3.
44	22.231	681.	472.	5.70	2.	2.
45	22.477	410.	289.	5.62	1.	1.

THE FOLLOWING FILES WERE USED IN THE ABOVE ANALYSIS

ENDDROP	EXE	14592	9-13-88	5:05p
CORN				
CASKDROP	EXE	2432	7-16-84	1:19p
BASR				

CHEM-NUCLEAR SYSTEMS, INC.
220 STONERIDGE DRIVE
COLUMBIA, SC 29210

IN-HOUSE PROGRAM OUTPUT COVER SHEET
****

```
*****************************************************
*                                                   *
*                                                   *
*            PROGRAM NAME  :  CASKDROP              *
*                                                   *
*                                                   *
*            DROP ORIENTATION : CORNER              *
*                                                   *
*                                                   *
*              REVISION NO.  :  2.0                 *
*                                                   *
*                                                   *
*            ISSUE DATE    :  09/13/88              *
*                                                   *
*                                                   *
*  APPROVED FOR SAFETY RELATED CALCULATIONS : YES   *
*                                                   *
*                                                   *
*     PROGRAM EXECUTION DATE :  05-31-1989          *
*                                                   *
*                                                   *
*     PROGRAM EXECUTION TIME :  13:17:51            *
*                                                   *
*                                                   *
*****************************************************
```

NOTE: DOCUMENTATIONS FOR THIS PROGRAM (INCLUDING THE REVISIONS) REQUIRED PER CNSI DESIGN CONTROL PROCEDURE EN-AD-002 ARE FILED WITH THE DOCUMENTATION CONTROLS.

```
05-31-1989 13:17:51
C A S K   G E O M E T R Y
 Corner Drop Analysis
Cask:10-160B  10-160B CASKDROP                                G= 386.4  in/sec^2
>>>>>>>>> Package uses correction factor table:  BACKED
Weight              (lb) W     72000
Outer diamter       (in) POD   78.5
Length              (in) LC    88
Drop height         (ft) H     30
CG (cask btm)       (in) LCG   56.257
Moment of Inertia        ICG   0                  (LB SEC^2 INCHES)
Ovp materials: Top: FR6725S   Bottom: FR6725H
Upper     Lower  (All values in inches)
Inner diameter  (in) OID                47.5       47.5
Outer diameter  (in) OOD                102.001    102.001
Inner thickness (in) LI                 21.012     21.012
Outer thickness (in) LO                 44.01      44.01
Press space bar to proceed05-31-1989 13:17:51
C A S K   D R O P   R E S U L T S
 Corner Drop Analysis
METHOD  1
Cask:10-160B  10-160B CASKDROP    Overpack:FR6725H
       ============
  ALPHA:  33.42634
              Iteration   Time     Deflection  Acc     Force     E(abs)
 BOTTOM DOWN        62     0.0426    14.8802    -71.0     5188319.   27009068.
Correction factors
 1 : 1     2 : 1     3 : 1     4 : 1     5 : 1
 6 : 1     7 : 1     8 : 1     9 : 1     10 : 1
 11 : 1     12 : 1     13 : 1     14 : 1     15 : 1

FRICTION FACTOR                     1000000
MAXIMUM ALLOWABLE STRAIN            100
SHEAR STRESS LIMIT                  1000000
DELTA INCREMENT FOR FIRST 25%       5
DELTA INCREMENT FOR 2ND 25%         2
DELTA INCREMENT FOR LAST 50%        1

MATERIAL  FR6725H  STRAIN VS. STRESS
  STRAIN(%)    STRESS(PSI)     STRAIN(%)    STRESS(PSI)
     1              429          51            3784
     2              792          52            3938
     3             1155          53            4092
     4             1430          54            4246
     5             1650          55            4400
     6             1760          56            4620
     7             1925          57            4840
     8             1980          58            5060
     9             2007          59            5280
    10             2035          60            5500
    11             2050          61            5819
    12             2064          62            6138
    13             2079          63            6457
    14             2094          64            6776
    15             2108          65            7095
    16             2123          66            7744
    17             2138          67            8393
    18             2152          68            9042
    19             2167          69            9691
```

20	2182	70	10340
21	2196	71	11682
22	2211	72	13024
23	2226	73	14366
24	2240	74	15708
25	2255	75	17050
26	2288	76	60368
27	2321	77	103686
28	2354	78	147004
29	2387	79	190322
30	2420	80	233640
31	2453	81	276958
32	2486	82	320276
33	2519	83	363594
34	2552	84	406912
35	2585	85	450230
36	2618	86	493548
37	2651	87	536865
38	2684	88	580183
39	2717	89	623501
40	2750	90	666819
41	2816	91	710137
42	2882	92	753455
43	2948	93	796773
44	3014	94	840091
45	3080	95	883409
46	3190	96	926727
47	3300	97	970045
48	3410	98	1013363
49	3520	99	1056681
50	3630	100	1099999

TIME	DEFL'N	VOLUME	ACC	F(CUM)	VELOCITY	AREA(CUM)
.0045	1.20	62.	0.4	38616.	528.0	52.
.0068	2.40	242.	-1.6	183265.	527.6	150.
.0091	3.60	560.	-4.6	400496.	524.9	265.
.0114	4.80	1047.	-8.5	677103.	519.1	406.
.0137	6.00	1737.	-13.1	1009232.	509.5	574.
.0147	6.48	2034.	-14.9	1142480.	504.4	620.
.0156	6.96	2382.	-16.8	1278834.	498.5	724.
.0166	7.44	2754.	-19.3	1458163.	491.8	774.
.0176	7.92	3160.	-21.7	1629762.	484.0	846.
.0186	8.40	3591.	-23.9	1787713.	475.2	897.
.0196	8.88	4070.	-26.4	1968218.	465.3	998.
.0207	9.36	4587.	-29.0	2159501.	454.1	1078.
.0217	9.84	5158.	-31.8	2359712.	441.5	1188.
.0228	10.32	5742.	-33.9	2512612.	427.5	1217.
.0240	10.80	6389.	-37.3	2755687.	411.8	1348.
.0252	11.28	7066.	-40.4	2978898.	393.9	1408.
.0264	11.76	7765.	-43.1	3172578.	373.7	1457.
.0277	12.24	8516.	-46.2	3398225.	350.9	1565.
.0284	12.48	8905.	-48.2	3537187.	338.2	1620.
.0292	12.72	9314.	-50.3	3686728.	324.4	1701.
.0299	12.97	9730.	-52.3	3836042.	309.4	1734.
.0307	13.21	10148.	-54.1	3965118.	293.1	1740.
.0316	13.45	10573.	-55.9	4089855.	275.1	1771.
.0325	13.69	11011.	-57.6	4218173.	255.3	1827.
.0335	13.93	11464.	-59.7	4364289.	233.0	1883.
.0345	14.17	11929.	-61.9	4527033.	207.5	1940.
.0358	14.41	12409.	-64.4	4704687.	177.0	1998.
.0373	14.65	12903.	-67.1	4896966.	138.4	2056.

.0395	14.89	13395.	-69.4	5068503.	80.6	2053.
.0000	15.13	13896.	-71.9	5246856.	0.0	2086.

C S K : FORCE DISTRIBUTION (2)
05-31-1989 13:17:51
CORNDR DROP, BOTTOM DOWN
CASK 10-160B AREA (I) 11.65236

J	1	2	3	4	5	
K	Y(K) X(J)	-21.089	-17.433	-13.778	-10.122	-6.467
1	0.000	29556.	28713.	28557.	29561.	34449.
2	3.188	28295.	28319.	28324.	29561.	34449.
3	6.375	25984.	27261.	27665.	29561.	34449.
4	9.563	24849.	26073.	26682.	29561.	34449.
5	12.750	23998.	25386.	26098.	29561.	34449.
6	15.938	23130.	24729.	26098.	29561.	34449.
7	19.125	20129.	24460.	26098.	29561.	34449.
8	22.313	18693.	24460.	26098.	29561.	34449.
9	25.500	18693.	24460.	26098.	29561.	34449.
10	28.688	18693.	24460.	26098.	29561.	28904.
11	31.875	18693.	24460.	26098.	27864.	24572.
12	35.063	18693.	24460.	25373.	24484.	0.
13	38.250	16424.	23506.	23761.	0.	0.
14	41.438	10446.	20029.	0.	0.	0.
15	44.625	0.	0.	0.	0.	0.
16	47.813	0.	0.	0.	0.	0.

C S K : FORCE DISTRIBUTION (2)
05-31-1989 13:17:52
CORNDR DROP, BOTTOM DOWN
CASK 10-160B AREA (I) 11.65236

J	6	7	8	9	10	
K	Y(K) X(J)	-2.811	0.845	4.500	8.156	11.811
1	0.000	47162.	62361.	31639.	24222.	0.
2	3.188	47162.	61546.	31275.	24072.	0.
3	6.375	47162.	59013.	30190.	23546.	0.
4	9.563	47162.	53553.	28401.	19434.	0.
5	12.750	47162.	41023.	26126.	0.	0.
6	15.938	47162.	32301.	24751.	0.	0.
7	19.125	44941.	28212.	21609.	0.	0.
8	22.313	32671.	25136.	0.	0.	0.
9	25.500	26982.	19925.	0.	0.	0.
10	28.688	24054.	0.	0.	0.	0.
11	31.875	0.	0.	0.	0.	0.
12	35.063	0.	0.	0.	0.	0.
13	38.250	0.	0.	0.	0.	0.
14	41.438	0.	0.	0.	0.	0.
15	44.625	0.	0.	0.	0.	0.
16	47.813	0.	0.	0.	0.	0.

C S K : REGIONS DISTRIBUTION (2)
05-31-1989 13:17:52
CORNDR DROP, BOTTOM DOWN
CASK 10-160B AREA (I) 11.65236

J	1	2	3	4	5	
K	Y(K) X(J)	-21.089	-17.433	-13.778	-10.122	-6.467
1	0.000	5.	5.	5.	4.	4.
2	3.188	5.	5.	5.	4.	4.
3	6.375	5.	5.	5.	4.	4.
4	9.563	5.	5.	5.	4.	4.
5	12.750	5.	5.	4.	4.	4.
6	15.938	5.	5.	4.	4.	4.
7	19.125	5.	4.	4.	4.	4.
8	22.313	4.	4.	4.	4.	4.

9	25.500	4.	4.	4.	4.	4.
10	28.688	4.	4.	4.	4.	10.
11	31.875	4.	4.	4.	3.	10.
12	35.063	4.	4.	3.	10.	0.
13	38.250	3.	3.	10.	0.	0.
14	41.438	2.	1.	0.	0.	0.
15	44.625	0.	0.	0.	0.	0.
16	47.813	0.	0.	0.	0.	0.

C S K : REGIONS DISTRIBUTION (2)
05-31-1989 13:17:52
CORNDR DROP, BOTTOM DOWN
CASK 10-160B AREA (I) 11.65236

J	6	7	8	9	10	
K	Y(K) X(J)	-2.811	0.845	4.500	8.156	11.811
1	0.000	4.	12.	10.	10.	0.
2	3.188	4.	12.	10.	10.	0.
3	6.375	4.	12.	10.	10.	0.
4	9.563	4.	10.	10.	10.	0.
5	12.750	4.	10.	10.	0.	0.
6	15.938	4.	10.	10.	0.	0.
7	19.125	12.	10.	10.	0.	0.
8	22.313	10.	10.	0.	0.	0.
9	25.500	10.	10.	0.	0.	0.
10	28.688	10.	0.	0.	0.	0.
11	31.875	0.	0.	0.	0.	0.
12	35.063	0.	0.	0.	0.	0.
13	38.250	0.	0.	0.	0.	0.
14	41.438	0.	0.	0.	0.	0.
15	44.625	0.	0.	0.	0.	0.
16	47.813	0.	0.	0.	0.	0.

C S K : STRAIN DISTRIBUTION (2)
05-31-1989 13:17:53
CORNDR DROP, BOTTOM DOWN
CASK 10-160B AREA (I) 11.65236

J	1	2	3	4	5	
K	Y(K) X(J)	-21.089	-17.433	-13.778	-10.122	-6.467
1	0.000	34.	31.	31.	34.	43.
2	3.188	30.	30.	30.	34.	43.
3	6.375	23.	28.	29.	34.	43.
4	9.563	17.	24.	26.	34.	43.
5	12.750	12.	20.	24.	34.	43.
6	15.938	8.	16.	24.	34.	43.
7	19.125	6.	14.	24.	34.	43.
8	22.313	5.	14.	24.	34.	43.
9	25.500	5.	14.	24.	34.	43.
10	28.688	5.	14.	24.	34.	32.
11	31.875	5.	14.	24.	29.	15.
12	35.063	5.	14.	20.	15.	0.
13	38.250	4.	9.	10.	0.	0.
14	41.438	2.	6.	0.	0.	0.
15	44.625	0.	0.	0.	0.	0.
16	47.813	0.	0.	0.	0.	0.

C S K : STRAIN DISTRIBUTION (2)
05-31-1989 13:17:53
CORNDR DROP, BOTTOM DOWN
CASK 10-160B AREA (I) 11.65236

J	6	7	8	9	10	
K	Y(K) X(J)	-2.811	0.845	4.500	8.156	11.811
1	0.000	53.	59.	39.	13.	0.
2	3.188	53.	59.	38.	12.	0.

3	6.375	53.	58.	35.	9.	0.
4	9.563	53.	56.	31.	5.	0.
5	12.750	53.	49.	24.	0.	0.
6	15.938	53.	40.	16.	0.	0.
7	19.125	51.	30.	7.	0.	0.
8	22.313	41.	18.	0.	0.	0.
9	25.500	27.	6.	0.	0.	0.
10	28.688	12.	0.	0.	0.	0.
11	31.875	0.	0.	0.	0.	0.
12	35.063	0.	0.	0.	0.	0.
13	38.250	0.	0.	0.	0.	0.
14	41.438	0.	0.	0.	0.	0.
15	44.625	0.	0.	0.	0.	0.
16	47.813	0.	0.	0.	0.	0.

C S K : NORMAL STRESS DISTRIBUTION (2)
05-31-1989 13:17:53
CORNDR DROP, BOTTOM DOWN
CASK 10-160B AREA (I) 11.65236

J	1	2	3	4	5	
K	Y(K) X(J)	-21.089	-17.433	-13.778	-10.122	-6.467
1	0.000	2117.	2057.	2045.	2117.	2467.
2	3.188	2027.	2028.	2029.	2117.	2467.
3	6.375	1861.	1953.	1981.	2117.	2467.
4	9.563	1780.	1867.	1911.	2117.	2467.
5	12.750	1719.	1818.	1869.	2117.	2467.
6	15.938	1657.	1771.	1869.	2117.	2467.
7	19.125	1442.	1752.	1869.	2117.	2467.
8	22.313	1339.	1752.	1869.	2117.	2467.
9	25.500	1339.	1752.	1869.	2117.	2467.
10	28.688	1339.	1752.	1869.	2117.	933.
11	31.875	1339.	1752.	1869.	769.	678.
12	35.063	1339.	1752.	539.	520.	0.
13	38.250	174.	249.	252.	0.	0.
14	41.438	748.	1435.	0.	0.	0.
15	44.625	0.	0.	0.	0.	0.
16	47.813	0.	0.	0.	0.	0.

C S K : NORMAL STRESS DISTRIBUTION (2)
05-31-1989 13:17:53
CORNDR DROP, BOTTOM DOWN
CASK 10-160B AREA (I) 11.65236

J	6	7	8	9	10	
K	Y(K) X(J)	-2.811	0.845	4.500	8.156	11.811
1	0.000	3378.	4467.	1496.	1145.	0.
2	3.188	3378.	4408.	1474.	1134.	0.
3	6.375	3378.	4227.	1408.	1098.	0.
4	9.563	3378.	2455.	1302.	891.	0.
5	12.750	3378.	1834.	1168.	0.	0.
6	15.938	3378.	1395.	1069.	0.	0.
7	19.125	3219.	1165.	892.	0.	0.
8	22.313	1271.	978.	0.	0.	0.
9	25.500	970.	716.	0.	0.	0.
10	28.688	776.	0.	0.	0.	0.
11	31.875	0.	0.	0.	0.	0.
12	35.063	0.	0.	0.	0.	0.
13	38.250	0.	0.	0.	0.	0.
14	41.438	0.	0.	0.	0.	0.
15	44.625	0.	0.	0.	0.	0.
16	47.813	0.	0.	0.	0.	0.

C S K : SHEAR STRESS DISTRIBUTION (2)
05-31-1989 13:17:54

CORNDR DROP, BOTTOM DOWN
CASK 10-160B AREA (I) 11.65236

J	1	2	3	4	5	
K	Y(K) X(J)	-21.089	-17.433	-13.778	-10.122	-6.467
1	0.000	1397.	1357.	1350.	1398.	1629.
2	3.188	1338.	1339.	1339.	1398.	1629.
3	6.375	1228.	1289.	1308.	1398.	1629.
4	9.563	1175.	1233.	1261.	1398.	1629.
5	12.750	1135.	1200.	1234.	1398.	1629.
6	15.938	1093.	1169.	1234.	1398.	1629.
7	19.125	952.	1156.	1234.	1398.	1629.
8	22.313	884.	1156.	1234.	1398.	1629.
9	25.500	884.	1156.	1234.	1398.	1629.
10	28.688	884.	1156.	1234.	1398.	2299.
11	31.875	884.	1156.	1234.	2264.	1997.
12	35.063	884.	1156.	2110.	2036.	0.
13	38.250	1399.	2002.	2024.	0.	0.
14	41.438	494.	947.	0.	0.	0.
15	44.625	0.	0.	0.	0.	0.
16	47.813	0.	0.	0.	0.	0.

C S K : SHEAR STRESS DISTRIBUTION (2)
05-31-1989 13:17:54
CORNDR DROP, BOTTOM DOWN
CASK 10-160B AREA (I) 11.65236

J	6	7	8	9	10	
K	Y(K) X(J)	-2.811	0.845	4.500	8.156	11.811
1	0.000	2230.	2948.	2266.	1735.	0.
2	3.188	2230.	2910.	2243.	1727.	0.
3	6.375	2230.	2790.	2175.	1696.	0.
4	9.563	2230.	3885.	2060.	1410.	0.
5	12.750	2230.	3005.	1914.	0.	0.
6	15.938	2230.	2395.	1835.	0.	0.
7	19.125	2125.	2123.	1626.	0.	0.
8	22.313	2499.	1923.	0.	0.	0.
9	25.500	2103.	1553.	0.	0.	0.
10	28.688	1913.	0.	0.	0.	0.
11	31.875	0.	0.	0.	0.	0.
12	35.063	0.	0.	0.	0.	0.
13	38.250	0.	0.	0.	0.	0.
14	41.438	0.	0.	0.	0.	0.
15	44.625	0.	0.	0.	0.	0.
16	47.813	0.	0.	0.	0.	0.

Attachment 2

CALCULATION OF THE APPLIED NODAL FORCES AND LOAD VECTOR MULTIPLIERS FOR THE ANSYS FINITE ELEMENT MODEL OF THE 10-160B CASK FOR EVALUATION OF THE HYPOTHETICAL ACCIDENT CONDITION STRESSES

CALCULATION OF APPLIED LOADING TO THE F.E.M.

END DROP ONTO THE LID

(a) Impact Limiter Reaction is applied as a uniform pressure p_1 over those lid elements that are directly in contact with the impact limiter. The magnitude of this pressure is as calculated as follows:

Total Impact Limiter Reaction = (Cask Mass + Payload Mass + Lower Impact Limiter Mass) x Deceleration

= (41,788 + 20,000 + 4,200) lbs. x 175.6 g's

= 11,587,493 lbs.

$\pi \times (38.625^2) \times p_1$ = 11,587,493

$$p_1 = \frac{11{,}587{,}493}{\pi\ (38.625^2 - 22.733^2)}$$

p_1 = 3,782.6 psi

Applied unit pressure = 100 psi

Load Multiplier S.E.2 = $\frac{3{,}782.6}{100} x \frac{\theta^1}{\sin\theta}$

= $\frac{3{,}782.6}{100} x \frac{15/57.3}{\sin 15^o}$

= 38.2608

Load Multiplier S.E.3 = $\frac{3{,}782.6}{100} x \frac{\theta^1}{\sin\theta}$

= $\frac{3{,}782.6}{100} x \frac{15/57.3}{\sin 6^o}$

= 37.8939

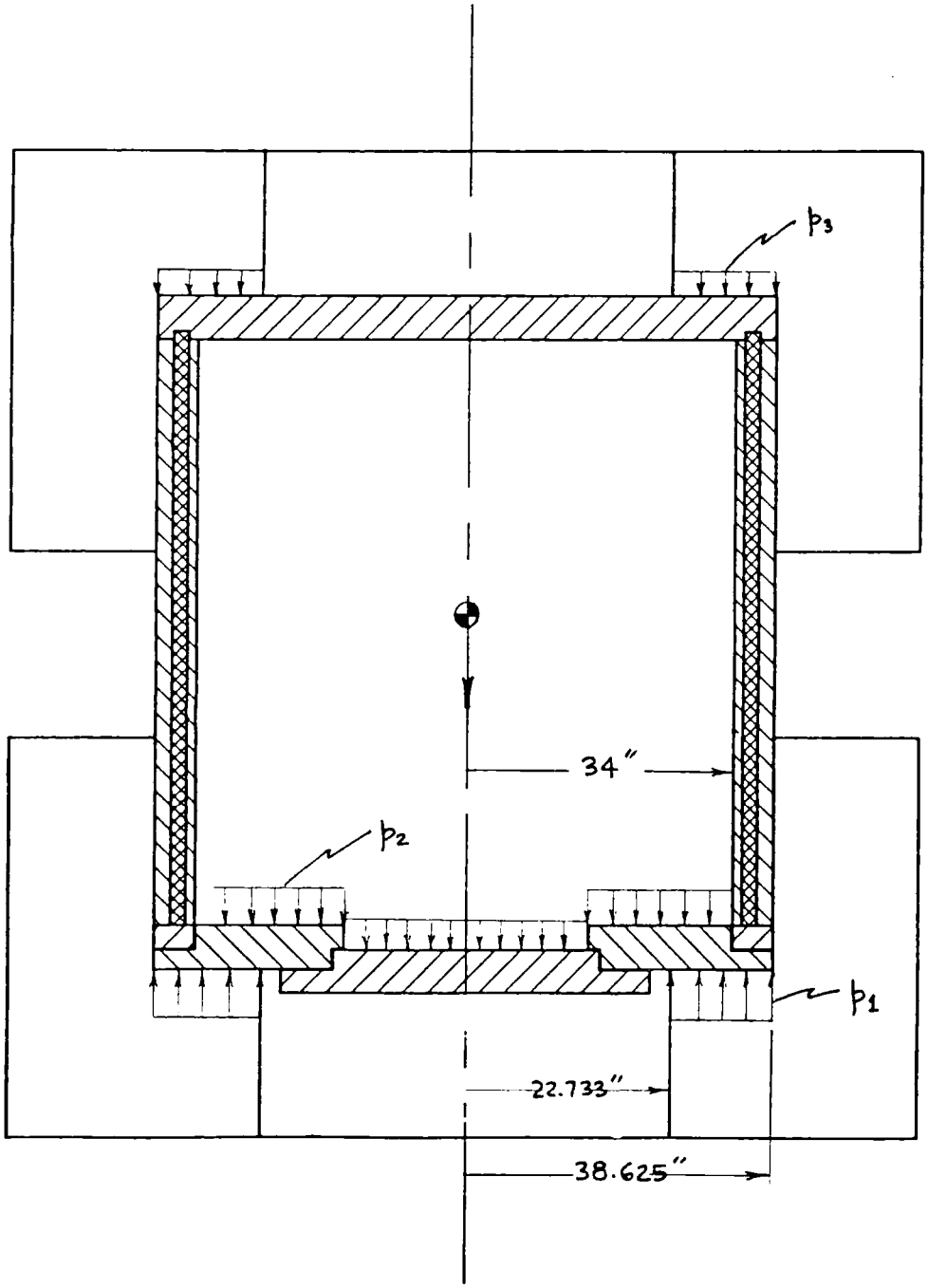

(b) Payload Inertia is distributed over the inside surface of the lid as a uniform pressure p_2. The magnitude of this pressure is calculated as follows:

Total Payload Inertia	=	Payload Mass x Deceleration
	=	20,000 lbs. x 175.6 g's
	=	3,512,000 lbs.

π x (34^2) x p_2 = 3,512,000

$$p_2 = \frac{3{,}512{,}000}{\pi x 34^2}$$

p_2 = 967.05 psi

Applied unit pressure = 10 psi

Load Multiplier S.E.1 $= \frac{967.05}{10} x \frac{\theta^1}{\sin\theta}$

$$= \frac{967.05}{10} x \frac{15/57.3}{\sin 15^o}$$

= 97.8181

Load Multiplier S.E.2 $\frac{967.05}{10} x \frac{\theta^1}{\sin\theta}$

$$= \frac{967.05}{10} x \frac{15/57.3}{\sin 15^o}$$

= 97.8181

Load Multiplier S.E.3 $\frac{967.05}{10} x \frac{\theta^1}{\sin\theta}$

$$= \frac{967.05}{10} x \frac{15/57.3}{\sin 6^o}$$

= 96.8815

(c) Impact Limiter Inertia is applied as a uniform line load p_3 over the edge of the base plate. Sine each node represents a section of 15° the nodal loads are calculated as follows:

Total Impact Limiter Inertia = Impact Limiter Mass x Deceleration
= 4,2000 lbs x 175.6 g's
= 737,520 lbs.

π x $(38.625^2 - 27.57^2)$ x p_3 = 737,520

$$p_3 = \frac{737{,}520}{\pi x 38.625^2 - 27.57^2}$$

= 320.8 psi

Applied unit pressure = 100 psi

Load Multiplier S.E.6 $= \frac{320.8}{100} x \frac{\theta^1}{\sin\theta}$

$$= \frac{320.8}{100} x \frac{6/57.3}{\sin 6^o}$$

= 3.2138

Load Multiplier S.E.7 $\frac{320.8}{100} x \frac{\theta^1}{\sin\theta}$

$$= \frac{320.8}{100} x \frac{15/57.3}{\sin 15^o}$$

= 3.2449

(d) Cask Inertia is applied as the uniform body force over the entire volume of the cask. A unit deceleration in the axial direction equal to 100 g's has been applied to formulate the load vectors. The following multiplier are the applied to account for the actual deceleration of 175.6 g's. Correction is also applied to account for representing the curved surface by a combination of flat surfaces.

Load Multiplier S.E.1 $= \frac{175.6}{100} x \frac{\theta^1}{\sin\theta}$

$= \frac{175.6}{100} x \frac{15/57.3}{\sin 15^o}$

$= 1.7762$

Load Multiplier S.E.2 $= \frac{175.6}{100} x \frac{\theta^1}{\sin\theta}$

$= \frac{175.6}{100} x \frac{15/57.3}{\sin 15^o}$

$= 1.7762$

Load Multiplier S.E.3 $= \frac{175.6}{100} x \frac{\theta^1}{\sin\theta}$

$= \frac{175.6}{100} x \frac{15/57.3}{\sin 6^o}$

$= 1.7592$

Load Multiplier S.E.4 $= \frac{175.6}{100} x \frac{\theta^1}{\sin\theta}$

$= \frac{175.6}{100} x \frac{15/57.3}{\sin 6^o}$

$= 1.7592$

Load Multiplier S.E.5 $= \frac{175.6}{100} x \frac{\theta^1}{\sin\theta}$

$\frac{175.6}{100} x \frac{15/57.3}{\sin 15^o}$

$= 1.7762$

Load Multiplier S.E.6 $= \frac{175.6}{100} x \frac{\theta^1}{\sin\theta}$

$= \frac{175.6}{100} x \frac{15/57.3}{\sin 6^o}$

$= 1.7592$

Load Multiplier S.E.7 $= \frac{175.6}{100} x \frac{\theta^1}{\sin\theta}$

$\frac{175.6}{100} x \frac{15/57.3}{\sin 15^o}$

$= 1.7762$

SIDE DROP

(a) Impact Limiter Reaction is applied as nodal forces on the finite element model nodes that are directly in contact with the impact limiter. The magnitude of the pressure from the CASKDROP program is available at various nodes for the 30-foot side drop. These pressures are converted to the nodal forces on the finite element model nodes. The table on the following pages lists the forces that were applied as the unit load vector to the model. The load multipliers for the substructures are calculated by the static force balance.

Referring to the sketch, the following quantities are defined for the half model:

F_1	=	Cask Body Inertia
	=	41,788/2 lbs. x 120.6 g's
	=	2,519,816 lbs.
F_2	=	Payload Inertia
	=	20,000/2 lbs. x 120.6 g's
	=	1,206,000 lbs.
R_1	=	Reaction at the Upper Impact Limiter
R_2	=	Reaction at the Lower Impact Limiter

Performing a moment balance at R_2:

$$R_1 = \frac{2{,}519{,}816x(44.2546-11)+1{,}206{,}000x(44-11)}{(77.125-11)}$$

$$= 1{,}869{,}088 \text{ lbs.}$$

$$R_2 = 2{,}519{,}816 + 1{,}206{,}000 - 1{,}869{,}088$$

$$= 1{,}856{,}728 \text{ lbs.}$$

Sum of applied load at the top impact limiter = 1,689,057 lbs. (see the following table)
Load Multiplier for S.E.5 and S.E.6 = 1,856,278 / 1,689,057
= 1.0993

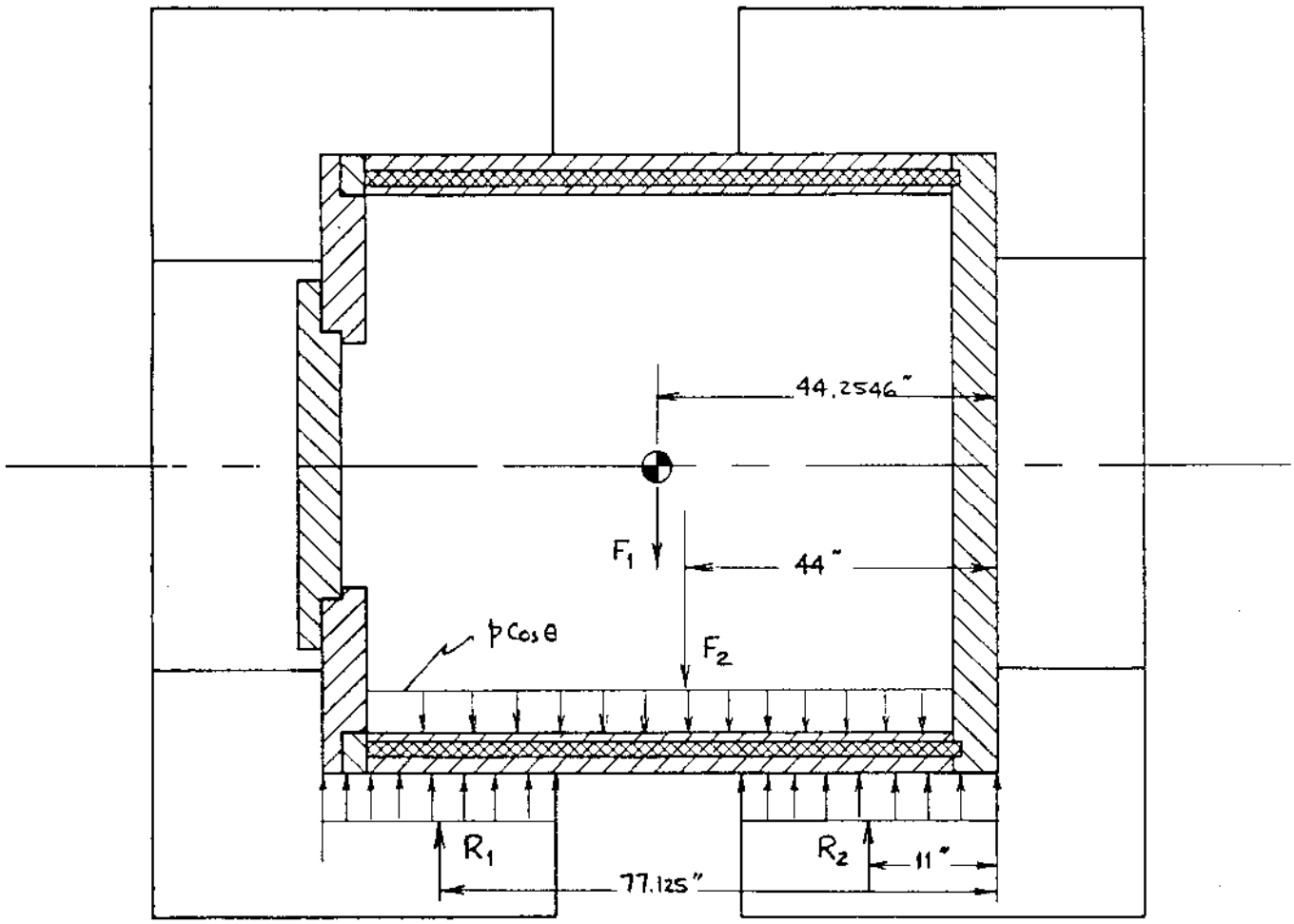
44.2546"
F1
44"
p Cos θ
F2
R1
R2
11"
77.125"

SUB-STRUCT. NO.	F.E.M. NODE NO.	ANGULAR LOCATION θ (rad)	RADIAL FORCE F_R (lbs)	TANGENTIAL FORCE F_T (lbs)	HORIZONTAL FORCE(1) F_H (lbs)	VERTICAL FORCE(2) F_V (lbs)
3	1	0.0000	-7530	383	383	-7530
	2	0.1047	-13911	1404	-57	-13982
	3	0.2094	-10912	2272	-46	-11146
	4	0.3142	-7530	2501	52	-7934
	5	0.4189	-5169	2501	183	-5739
	6	0.5236	-3471	2051	41	-4031
	7	0.6283	-1301	801	-117	-1523
	201	0.0000	-15060	766	766	-15060
	202	0.1047	-27823	2809	-115	-27964
	203	0.2094	-21824	4544	-93	-22292
	204	0.3142	-15060	5003	104	-15869
	205	0.4189	-10338	5003	365	-11478
	206	0.5236	-6941	4103	82	-8063
	207	0.6283	-2603	1601	-234	-3047
	401	0.0000	-7530	383	383	-7530
	402	0.1047	-13911	1404	-57	-13982
	403	0.2094	-10912	2272	-46	-11146
	404	0.3142	-7530	2501	52	-7934
	405	0.4189	-5169	2501	183	-5739
	406	0.5236	-3471	2051	41	-4031
	407	0.6283	-1301	801	-117	-1523
4	1	0.0000	-9036	460	460	-9036
	2	0.1047	-16694	1685	-69	-16778
	3	0.2094	-13094	2726	-56	-13375
	4	0.3142	-9036	3002	62	-9521
	5	0.4189	-6203	3002	219	-6887
	6	0.5236	-4165	2462	49	-4838
	7	0.6283	-1562	961	-141	-1828
	101	0.0000	-18072	920	920	-18072
	102	0.1047	-33387	3371	-138	-35845
	103	0.2094	-26189	5453	-112	-26750
	104	0.3142	-18072	6003	125	-19043
	105	0.4189	-12405	6003	438	-13774
	106	0.5236	-8330	4923	99	-9675
	107	0.6283	-3123	1922	-281	-3656
	201	0.0000	-16566	843	843	-16566
	202	0.1047	-30605	3090	-126	-33049
	203	0.2094	-24006	4998	-102	-24521
	204	0.3142	-16566	5503	114	-17456
	205	0.4189	-11371	5503	402	-12626
	206	0.5236	-7635	4513	90	-8869
	207	0.6283	-2863	1761	-258	-3351

TOP IMPACT LIMITER (continued)

SUB-STRUCT. NO.	F.E.M. NODE NO.	ANGULAR LOCATION θ (rad)	RADIAL FORCE F_R (lbs)	TANGENTIAL FORCE F_T (lbs)	HORIZONTAL FORCE(1) F_H (lbs)	VERTICAL FORCE(2) F_V (lbs)
4	301	0.0000	-15060	766	766	-15060
	302	0.1047	-27823	2809	-115	-27964
	303	0.2094	-21824	4544	-93	-22292
	304	0.3142	-15060	5003	104	-15869
	305	0.4189	-10338	5003	365	-11478
	306	0.5236	-6941	4103	82	-8063
	307	0.6283	-2603	1601	-234	-3047
	401	0.0000	-16224	2074	2074	-16224
	402	0.2618	-23403	5195	-1039	-23950
	406	0.5236	-9718	4729	-764	-10781
5	201	0.0000	-34564	4418	4418	-34564
	202	0.2618	-49858	11079	-2202	-51027
	203	0.5236	-20838	10074	-1695	-23083
	301	0.0000	-73075	9340	9340	-73075
	302	0.2618	-105408	23424	-4656	-107878
	303	0.5236	-44055	21298	-3583	-48802
	401	0.0000	-81602	10430	10430	-81602
	402	0.2618	-117708	26157	-5199	-120468
	403	0.5236	-49196	23784	-4001	-54497
	501	0.0000	-91116	11646	11646	-91116
	502	0.2618	-131432	29207	-5806	-134513
	503	0.5236	-54932	26557	-4467	-60850
	601	0.0000	-48024	6138	6138	-48024
	602	0.2618	-69273	15394	-3060	-70897
	603	0.5236	-28953	13997	-2354	-32072
TOTALS						-1,700,253

GENERAL NOTES:

(1) $F_H = F_R \sin\theta + F_T \cos\theta$

(2) $F_V = F_R \cos\theta - F_T \sin\theta$

BOTTOM IMPACT LIMITER

SUB-STRUCT. NO.	F.E.M. NODE NO.	ANGULAR LOCATION θ (rad)	RADIAL FORCE F_R (lbs)	TANGENTIAL FORCE F_T (lbs)	HORIZONTAL FORCE(1) F_H (lbs)	VERTICAL FORCE(2) F_V (lbs)
5	1601	0.0000	-38549	4927	4927	-38549
	1602	0.2618	-55606	12357	-2456	-56909
	1603	0.5236	-23240	11235	-1890	-25744
	1701	0.0000	-73075	9340	9340	-73075
	1702	0.2618	-105408	23424	-4656	-107878
	1703	0.5236	-44055	21298	-3583	-48802
	1801	0.0000	-70219	8975	8975	-70219
	1802	0.2618	-101289	22508	-4474	-105913
	1803	0.5236	-42333	20466	-3443	-46895
	1901	0.0000	-71387	9125	9125	-71387
	1902	0.2618	-102974	22883	-4549	-107638
	1903	0.5236	-43038	20807	-3500	-47675
	2001	0.0000	-35694	4562	4562	-35694
	2002	0.2618	-51487	11441	-2274	-52694
	2003	0.5236	-21519	10403	-1750	-23837
6	1	0.0000	-11042	562	562	-11042
	2	0.2618	-20399	2059	-3291	-20237
	6	0.5236	-5089	3008	60	-5911
	7	0.7854	-1908	1174	-519	-2179
	201	0.0000	-27108	1379	1379	-27108
	202	0.1047	-50081	5056	-207	-50335
	203	0.2094	-39283	8179	-167	-40125
	204	0.3142	-27108	9005	187	-28564
	205	0.4189	-18608	9005	658	-20661
	206	0.5236	-12494	7385	148	-14513
	207	0.6283	-4685	2882	-422	-5484
	401	0.0000	-24596	1251	1251	-24596
	402	0.1047	-45440	4587	-188	-45670
	403	0.2094	-35643	7421	-152	-36407
	404	0.3142	-24596	8170	170	-25917
	405	0.4189	-16883	8170	597	-18747
	406	0.5236	-11336	6700	134	-13168
	407	0.6283	-4250	2615	-383	-4976

BOTTOM IMPACT LIMITER (continued)

SUB-STRUCT. NO.	F.E.M. NODE NO.	ANGULAR LOCATION θ (rad)	RADIAL FORCE F_R (lbs)	TANGENTIAL FORCE F_T (lbs)	HORIZONTAL FORCE(1) F_H (lbs)	VERTICAL FORCE(2) F_V (lbs)
6	601	0.0000	-22090	1124	1124	-22090
	602	0.1047	-40810	4120	-169	-41017
	603	0.2094	-32011	6665	-136	-32697
	604	0.3142	-22090	7338	152	-23276
	605	0.4189	-15163	7338	536	-16837
	606	0.5236	-10181	6018	121	-11826
	607	0.6283	-3817	2349	-344	-4469
	801	0.0000	-22090	1124	1124	-22090
	802	0.1047	-40810	4120	-169	-41017
	803	0.2094	-32011	6665	-136	-32697
	804	0.3142	-22090	7338	152	-23276
	805	0.4189	-15163	7338	536	-16837
	806	0.5236	-10181	6018	121	-11826
	807	0.6283	-3817	2349	-344	-4469
	1001	0.0000	-11042	562	562	-11042
	1002	0.1047	-20399	2059	-84	-20503
	1003	0.2094	-16001	3331	-68	-16344
	1004	0.3142	-11042	3668	76	-11635
	1005	0.4189	-7579	3668	268	-8416
	1006	0.5236	-5089	3008	60	-5911
	1007	0.6283	-1908	1174	-172	-2234
TOTALS						-1,689,057

GENERAL NOTES:

(1) $F_H = F_R \sin\theta + F_T \cos\theta$

(2) $F_V = F_R \cos\theta - F_T \sin\theta$

(b) Payload inertia is applied as the surface pressure to the inner shell elements located in the lower half of the model. The magnitude of the pressure varies sinusoidally around the circumference and is uniform along nodes that are in direct contact with the payload, i.e. the lower half of the shell nodes. The total payload inertia for the half model is 10,000 lbs. x 120.6 g's = 1,206,000 lbs. This load was distributed over the nodes such that the pressure $(p\theta,z) = p_o \cos\theta$. The sum of the vertical component of the applied load per unit length of the inner shell is,

$$P_u = \int_o^{x/2} p_o \cos\theta R \cos\theta x d\theta$$

$$= p_o R \int_o^{x/2} \cos^2\theta d\theta$$

$$= \frac{\pi x 34 x p_o}{4}$$

The unit vector for S.E.4 and S.E.6 has a magnitude of p_0 = 10 psi

$$\text{Load multiplier for S.E.4 and S.E.6} = \frac{1{,}206{,}000/77}{26.7x10} x \frac{6/57.3}{\sin 6^o}$$

$$= 58.7634$$

The unit vector for S.E.5 has a magnitude of p_o = 100 psi

$$\text{Load multiplier for S.E.5} = \frac{1{,}206{,}000/77}{26.7x100} x \frac{15/57.3}{\sin 15^o}$$

$$= 5.9332$$

(c) Cask Inertia is applied as the uniform body force over the entire volume of the cask. A unit deceleration in the x-direction equal to 100 g's has been applied to formulate the load vectors. The following multiplier are the applied to account for the actual deceleration of 120.6 g's. Correction is also applied to account for representing the curved surface by a combination of flat surfaces.

$$\text{Load Multiplier S.E.1} = \frac{120.6}{100} x \frac{\theta}{\sin\theta}$$

$$= \frac{120.6}{100} x \frac{15/57.3}{\sin 15^o}$$

$$= 1.2199$$

$$\text{Load Multiplier S.E.2} = \frac{120.6}{100} x \frac{\theta}{\sin\theta}$$

$$= \frac{120.6}{100} x \frac{15/57.3}{\sin 15^o}$$

$$= 1.2199$$

Load Multiplier S.E.3 $= \frac{120.6}{100} x \frac{\theta}{\sin \theta}$

$$= \frac{120.6}{100} x \frac{6/57.3}{\sin 6^o}$$

$$= 1.2082$$

Load Multiplier S.E.4 $= \frac{120.6}{100} x \frac{\theta}{\sin \theta}$

$$= \frac{120.6}{100} x \frac{6/57.3}{\sin 6^o}$$

$$= 1.2082$$

Load Multiplier S.E.5 $= \frac{120.6}{100} x \frac{\theta}{\sin \theta}$

$$= \frac{120.6}{100} x \frac{15/57.3}{\sin 15^o}$$

$$= 1.2199$$

Load Multiplier S.E.6 $= \frac{120.6}{100} x \frac{\theta}{\sin\theta}$

$= \frac{120.6}{100} x \frac{6/57.3}{\sin 6^o}$

$= 1.2082$

Load Multiplier S.E.7 $= \frac{120.6}{100} x \frac{\theta}{\sin\theta}$

$= \frac{120.6}{100} x \frac{15/57.3}{\sin 15^o}$

$= 1.2199$

CORNER DROP

The nodal loads applied to the finite element model for the 30-foot corner drop conditions was obtained from the CNSI in-house proprietary programs CORNIL, CORNVT and PAYLOAD. These programs were developed to generate nodal loading for an ANSYS model utilizing the results of another CNSI program CASKDROP. These programs have been verified and documented according to the CNSI quality assurance program. The applied nodal loading to the finite element model is presented here along with a resultant check.

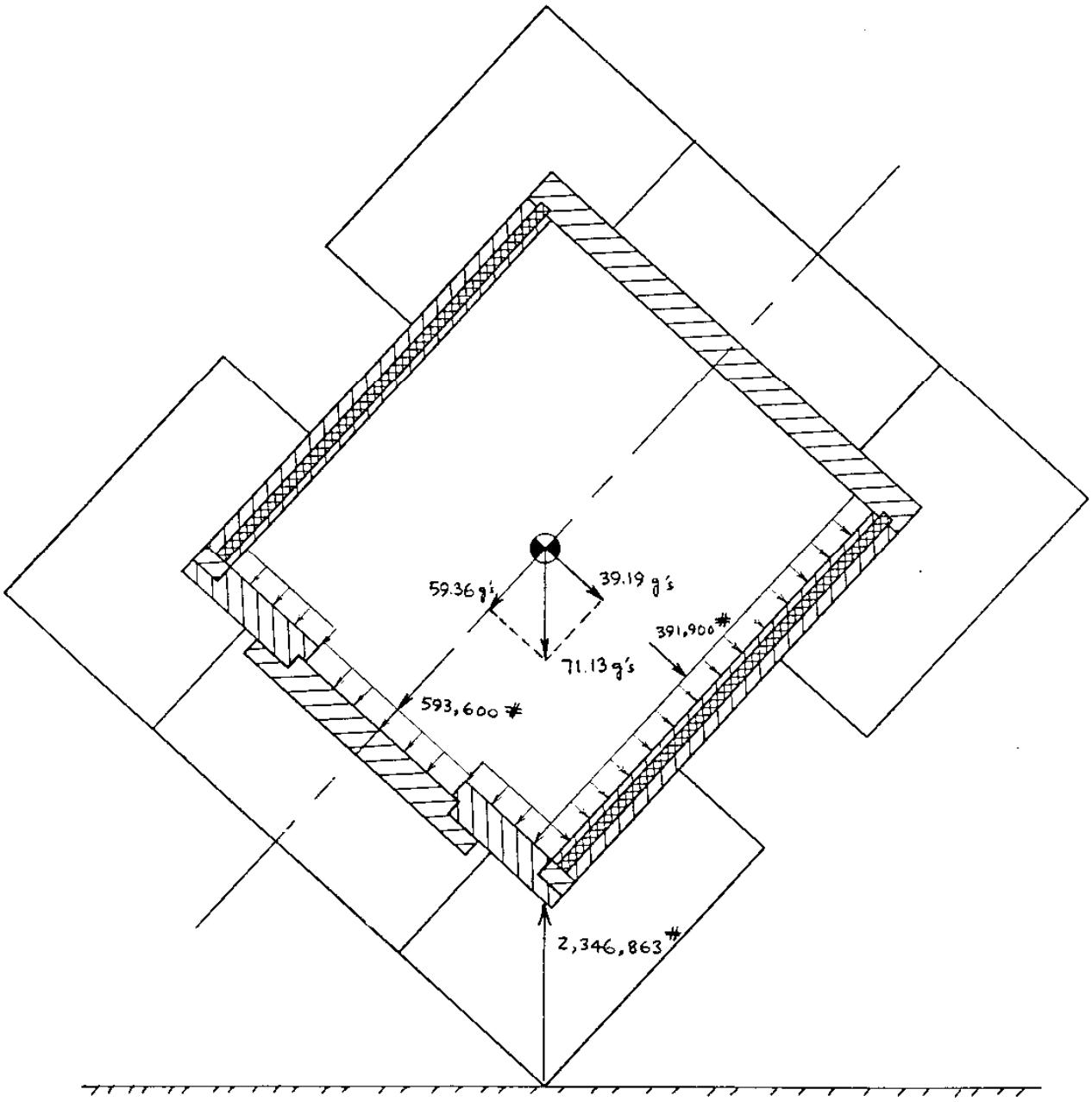
59.36 g's
39.19 g's
71.13 g's
391,900#
593,600#
2,346,863#

IMPACT LIMITER REACTION

SUB-STRUCT. NO.	F.E.M. NODE NO.	ANGULAR LOCATION θ (rad)	RADIAL FORCE F_R (lbs)	TANGENTIAL FORCE F_T (lbs)	AXIAL FORCE F_Z (lbs)	GLOBAL-X FORCE(1) F_X (lbs)
2	53	0.0000	-4723	0	7225	-4723
	54	0.2618	-8815	2362	13961	-9126
	55	0.5236	-7157	4132	12642	-8264
	56	0.7854	-5176	5176	11198	-7320
	57	1.0472	-3156	5466	9655	-6312
	66	0.0000	-8277	0	12663	-8277
	67	0.2618	-15450	4140	24469	-15995
	68	0.5236	-12867	7429	22729	-14858
	69	0.7854	-8240	8240	17826	-11653
	70	1.0472	-5458	9453	16698	-10915
	79	0.0000	-5631	0	8614	-5631
	80	0.2618	-8372	2243	13260	-8668
	81	0.5236	-8033	4638	14189	-9275
	82	0.7854	-3629	3628	7850	-5132
	83	1.0472	-2531	4384	7744	-5062
	92	0.0000	-3428	0	5244	-3428
	93	0.2618	-3283	880	5200	-3399
	94	0.5236	-4128	2383	7291	-4766
3	1	0.0000	-5196	0	7949	-5196
	2	0.1047	-10223	1074	15725	-10279
	3	0.2094	-9310	1979	14561	-9518
	4	0.3142	-7112	2311	11440	-7478
	5	0.4189	-6060	2698	10148	-6633
	6	0.5236	-6074	3507	10729	-7014
	7	0.6283	-3984	2895	7533	-4924
	8	0.7330	-3487	3140	7179	-4693
	9	0.8378	-2622	2913	5996	-3919
	10	0.9425	-2026	2788	5272	-3446
	11	1.0472	-1509	2615	4618	-3019
	12	1.3090	-1100	2471	4138	-2672
	17	0.0000	-5256	0	8040	-5256
	18	0.1047	-10063	1058	15479	-10119
	19	0.2094	-8958	1904	14010	-9158
	20	0.3142	-7369	2394	11853	-7748
	21	0.4189	-6740	3001	11287	-7378
	22	0.5236	-6205	3583	10961	-7165
	23	0.6283	-4456	3237	8426	-5508
	24	0.7330	-3917	3527	8064	-5271
	25	0.8378	-3123	3468	7139	-4667
	26	0.9425	-2508	3452	6528	-4267
	27	1.0472	-1986	3441	6078	-3973
	28	1.3090	-1528	3433	5749	-3712
	33	0.0000	-8668	0	13261	-8668
	34	0.1047	-8346	877	12838	-8392
	35	0.2094	-7555	1606	11816	-7724
	36	0.3142	-6551	2128	10537	-6888
	37	0.4189	-6170	2747	10333	-6754
	38	0.5236	-5165	2982	9124	-5964
	39	0.6283	-3959	2876	7486	-4894
	40	0.7330	-3368	3032	6932	-4532
	41	0.8378	-2734	3037	6251	-4086
	42	0.9425	-2194	3020	5710	-3732
	43	1.0472	-1748	3028	5349	-3497
	44	1.3090	-1322	2970	4973	-3211
	49	0.0000	-3579	0	5475	-3579

IMPACT LIMITER REACTION (continued)

SUB-STRUCT. NO.	F.E.M. NODE NO.	ANGULAR LOCATION θ (rad)	RADIAL FORCE F_R (lbs)	TANGENTIAL FORCE F_T (lbs)	AXIAL FORCE F_Z (lbs)	GLOBAL-X FORCE(1) F_X (lbs)
3	50	0.1047	-6926	728	10653	-6964
	51	0.2094	-6355	1351	9938	-6497
	52	0.3142	-5721	1859	9202	-6015
	53	0.4189	-5147	2292	8619	-5634
	54	0.5236	-4301	2483	7597	-4966
	55	0.6283	-3419	2484	6465	-4226
	56	0.7330	-2886	2599	5941	-3884
	57	0.8378	-2360	2622	5396	-3528
	58	0.9425	-1903	2619	4952	-3237
	59	1.0472	-1523	2638	4660	-3046
	60	1.3090	-1139	2559	4285	-2767
	65	0.0000	-3656	0	5593	-3656
	66	0.1047	-7105	747	10929	-7144
	67	0.2094	-6607	1404	10334	-6755
	68	0.3142	-6054	1967	9739	-6366
	69	0.4189	-5315	2366	8900	-5818
	70	0.5236	-4430	2558	7825	-5115
	71	0.6283	-3634	2641	6872	-4492
	72	0.7330	-3068	2763	6316	-4129
	73	0.8378	-2528	2808	5780	-3778
	74	0.9425	-2042	2810	5313	-3473
	75	1.0472	-1647	2852	5038	-3293
	76	1.3090	-1218	2735	4581	-2957
	81	0.0000	-5624	0	8603	-5624
	82	0.1047	-10989	1155	16903	-11049
	83	0.2094	-10388	2208	16247	-10621
	84	0.3142	-9489	3083	15263	-9977
	85	0.4189	-8302	3696	13902	-9087
	86	0.5236	-6890	3978	12171	-7956
	87	0.6283	-5903	4289	11162	-7296
	88	0.7330	-4983	4487	10258	-6705
	89	0.8378	-4146	4604	9478	-6196
	90	0.9425	-3354	4617	8730	-5707
	91	1.0472	-2732	4732	8360	-5465
	92	1.3090	-1992	4474	7492	-4837
	97	0.0000	-9175	0	14036	-9175
	98	0.1047	-18017	1894	27714	-18116
	99	0.2094	-17044	3623	26655	-17424
	100	0.3142	-15481	5030	24902	-16278
	101	0.4189	-13421	5975	22474	-14691
	102	0.5236	-12058	6961	21299	-13923
	103	0.6283	-10526	7648	19904	-13011
	104	0.7330	-8994	8098	18515	-12103
	105	0.8378	-7561	8397	17286	-11300
	106	0.9425	-6267	8626	16311	-10662
	107	1.0472	-5115	8860	15651	-10231
	108	1.3090	-3612	8113	13585	-8771
	113	0.0000	-12640	883	19407	-12640
	114	0.2618	-15803	4222	25057	-16357
	118	0.5236	-19262	11042	34089	-22202
	119	0.7854	-9331	9313	20195	-13183
	123	1.0472	-8506	14444	25736	-16762
	201	0.0000	-4522	0	6918	-4522
	202	0.1047	-8955	941	13774	-9004
	203	0.2094	-8678	1845	13573	-8872

IMPACT LIMITER REACTION (continued)

SUB-STRUCT. NO.	F.E.M. NODE NO.	ANGULAR LOCATION θ (rad)	RADIAL FORCE F_R (lbs)	TANGENTIAL FORCE F_T (lbs)	AXIAL FORCE F_Z (lbs)	GLOBAL-X FORCE(1) F_X (lbs)
3	204	0.3142	-6884	2237	11073	-7238
	205	0.4189	-5350	2382	8960	-5857
	206	0.5236	-5269	3042	9308	-6085
	207	0.6283	-3526	2562	6668	-4359
	208	0.7330	-2920	2630	6012	-3930
	209	0.8378	-2099	2331	4798	-3137
	210	0.9425	-1523	2096	3964	-2591
	211	1.0472	-1011	1752	3095	-2023
	212	1.3090	-638	1433	2399	-1549
	401	0.0000	-1942	0	2971	-1942
	402	0.1047	-3866	406	5947	-3888
	403	0.2094	-3809	810	5958	-3895
	404	0.3142	-3249	1056	5227	-3417
	405	0.4189	-2464	1097	4126	-2697
	406	0.5236	-2385	1377	4213	-2754
	407	0.6283	-1750	1271	3309	-2163
	408	0.7330	-1394	1255	2869	-1876
	409	0.8378	-1052	1168	2405	-1572
	410	0.9425	-774	1065	2014	-1316
	411	1.0472	-510	883	1559	-1019
	412	1.3090	-322	723	1211	-782
4	1	0.0000	-2588	0	3959	-2588
	2	0.1047	-5155	542	7929	-5183
	3	0.2094	-5079	1080	7943	-5192
	4	0.3142	-4332	1408	6968	-4555
	5	0.4189	-3285	1463	5501	-3596
	6	0.5236	-3180	1836	5618	-3672
	7	0.6283	-2333	1695	4411	-2884
	8	0.7330	-1858	1673	3825	-2501
	9	0.8378	-1402	1557	3206	-2096
	10	0.9425	-1031	1420	2685	-1755
	11	1.0472	-679	1177	2079	-1359
	12	1.3090	-429	964	1614	-1042
	101	0.0000	-3032	0	4638	-3032
	102	0.1047	-6100	641	9384	-6134
	103	0.2094	-6203	1319	9701	-6342
	104	0.3142	-5619	1826	9037	-5908
	105	0.4189	-4424	1970	7408	-4843
	106	0.5236	-4104	2369	7249	-4739
	107	0.6283	-3306	2402	6251	-4086
	108	0.7330	-2610	2350	5372	-3512
	109	0.8378	-2107	2341	4818	-3149
	110	0.9425	-1506	2072	3919	-2562
	111	1.0472	-1029	1782	3149	-2058
	112	1.3090	-651	1463	2450	-1582
	201	0.0000	-1737	0	2657	-1737
	202	0.1047	-3524	370	5420	-3543
	203	0.2094	-3664	779	5731	-3746
	204	0.3142	-3453	1122	5554	-3631
	205	0.4189	-2827	1259	4734	-3094
	206	0.5236	-2514	1451	4441	-2903
	207	0.6283	-2116	1537	4000	-2615
	208	0.7330	-1681	1513	3460	-2262
	209	0.8378	-1366	1517	3123	-2041
	210	0.9425	-990	1363	2577	-1684

IMPACT LIMITER REACTION (continued)

SUB-STRUCT. NO.	F.E.M. NODE NO.	ANGULAR LOCATION θ (rad)	RADIAL FORCE F_R (lbs)	TANGENTIAL FORCE F_T (lbs)	AXIAL FORCE F_Z (lbs)	GLOBAL-X FORCE(1) F_X (lbs)
4	211	1.0472	-689	1194	2109	-1379
	212	1.3090	-437	981	1643	-1061
	301	0.0000	-2043	0	3125	-2043
	302	0.1047	-3988	419	6134	-4010
	303	0.2094	-3991	848	6241	-4080
	304	0.3142	-3950	1283	6353	-4153
	305	0.4189	-3380	1505	5660	-3700
	306	0.5236	-2865	1654	5061	-3308
	307	0.6283	-2534	1841	4791	-3132
	308	0.7330	-2027	1825	4172	-2727
	309	0.8378	-1658	1842	3791	-2478
	310	0.9425	-1220	1680	3176	-2076
	311	1.0472	-866	1500	2650	-1732
	312	1.3090	-545	1225	2052	-1325
	401	0.0000	-3425	238	5258	-3425
	402	0.2618	-4177	1117	6624	-4324
	406	0.5236	-4920	2803	8694	-5662
	407	0.7854	-2099	2090	4538	-2962
	411	1.0472	-1546	2589	4631	-3015
	412	1.3090	-253	895	1425	-930
5	201	0.0000	-5096	0	7797	-5096
	202	0.2618	-9012	2415	14273	-9330
	203	0.5236	-7082	4089	12509	-8177
	204	0.7854	-4655	4655	10071	-6583
	205	1.0472	-2240	3880	6854	-4481
	206	1.3090	-550	2054	3254	-2127
	301	0.0000	-9662	0	14780	-9662
	302	0.2618	-16148	4327	25574	-16717
	303	0.5236	-13488	7787	23826	-15575
	304	0.7854	-8195	8195	17729	-11589
	305	1.0472	-4014	6953	12282	-8029
	306	1.3090	-1178	4398	6965	-4553
	401	0.0000	-8452	0	12930	-8452
	402	0.2618	-14379	3853	22773	-14886
	403	0.5236	-13187	7614	23295	-15228
	404	0.7854	-6347	6347	13732	-8977
	405	1.0472	-3575	6193	10939	-7151
	406	1.3090	-1332	4971	7872	-5146
	501	0.0000	-4211	0	6442	-4211
	502	0.2618	-9856	2641	15609	-10204
	503	0.5236	-7747	4473	13685	-8946
	504	0.7854	-3935	3935	8514	-5566
	505	1.0472	-2403	4162	7352	-4806
	506	1.3090	-1191	4445	7040	-4602
	602	0.2618	-2348	629	3719	-2431
	604	0.7854	-1756	1756	3799	-2483
	605	1.0472	-498	863	1525	-997
	606	1.3090	-710	2651	4198	-2744
	607	1.5708	0	0	-0	0
	706	1.3090	-395	1476	2337	-1528
	707	1.5708	0	-0	-0	0
	806	1.3090	-169	630	998	-653
	807	1.5708	0	-0	-0	0
TOTALS					1,927,723	-1,259,391

GENERAL NOTES:

(1) $F_X = F_R \cos\theta - F_T \sin\theta$

PAYLOAD INERTIA

SUB-STRUCT. NO.	F.E.M. NODE NO.	ANGULAR LOCATION θ (rad)	RADIAL FORCE F_R (lbs)	TANGENTIAL FORCE F_T (lbs)	AXIAL FORCE F_Z (lbs)	GLOBAL-X FORCE(1) F_X (lbs)
1	340	not used	0	0	-1107	0
	341	not used	0	0	-2214	0
	342	not used	0	0	-2214	0
	343	not used	0	0	-2214	0
	344	not used	0	0	-2214	0
	345	not used	0	0	-2214	0
	346	not used	0	0	-2214	0
	347	not used	0	0	-2214	0
	348	not used	0	0	-2214	0
	349	not used	0	0	-2214	0
	350	not used	0	0	-2214	0
	351	not used	0	0	-2214	0
	352	not used	0	0	-1107	0
	353	not used	0	0	-2357	0
	354	not used	0	0	-4526	0
	355	not used	0	0	-3988	0
	356	not used	0	0	-3249	0
	357	not used	0	0	-3247	0
	358	not used	0	0	-3844	0
	359	not used	0	0	-4054	0
	360	not used	0	0	-3844	0
	361	not used	0	0	-3247	0
	362	not used	0	0	-3249	0
	363	not used	0	0	-3988	0
	364	not used	0	0	-4526	0
	365	not used	0	0	-2357	0
	366	not used	0	0	-2333	0
	367	not used	0	0	-2806	0
	368	not used	0	0	-3017	0
	369	not used	0	0	-2806	0
	370	not used	0	0	-2333	0
	371	not used	0	0	-2951	0
	372	not used	0	0	-2352	0
	373	not used	0	0	-2352	0
	374	not used	0	0	-2352	0
	375	not used	0	0	-2951	0
	376	not used	0	0	-3488	0
	377	not used	0	0	-2352	0
	378	not used	0	0	-2352	0
	379	not used	0	0	-2352	0
	380	not used	0	0	-3488	0
	381	not used	0	0	-1838	0
	382	not used	0	0	-1176	0
	383	not used	0	0	-1176	0
	384	not used	0	0	-1176	0
	385	not used	0	0	-1838	0
2	633	1.5708	0	0	-2297	0
	634	1.8326	0	0	-4590	0
	635	2.0944	0	0	-4590	0
	636	2.3562	0	0	-4590	0
	637	2.6180	0	0	-4590	0
	638	2.8798	0	0	-4590	0
	639	3.1416	0	0	-2297	0
	646	1.5708	0	0	-4246	0
	647	1.8326	0	0	-8492	0

PAYLOAD INERTIA (continued)

SUB-STRUCT. NO.	F.E.M. NODE NO.	ANGULAR LOCATION θ (rad)	RADIAL FORCE F_R (lbs)	TANGENTIAL FORCE F_T (lbs)	AXIAL FORCE F_Z (lbs)	GLOBAL-X FORCE(1) F_X (lbs)
2	648	2.0944	0	0	-8492	0
	649	2.3562	0	0	-8492	0
	650	2.6180	0	0	-8492	0
	651	2.8798	0	0	-8492	0
	652	3.1416	0	0	-4246	0
	653	0.0000	0	0	-1174	0
	654	0.2618	0	0	-2349	0
	655	0.5236	0	0	-2349	0
	656	0.7854	0	0	-2349	0
	657	1.0472	0	0	-2349	0
	658	1.3090	0	0	-2349	0
	659	1.5708	0	0	-4308	0
	660	1.8326	0	0	-6267	0
	661	2.0944	0	0	-6267	0
	662	2.3562	0	0	-6267	0
	663	2.6180	0	0	-6267	0
	664	2.8798	0	0	-6267	0
	665	3.1416	0	0	-3133	0
	666	0.0000	0	0	-2218	0
	667	0.2618	0	0	-4432	0
	668	0.5236	0	0	-4432	0
	669	0.7854	0	0	-4432	0
	670	1.0472	0	0	-4432	0
	671	1.3090	0	0	-4432	0
	672	1.5708	0	0	-4432	0
	673	1.8326	0	0	-4432	0
	674	2.0944	0	0	-4432	0
	675	2.3562	0	0	-4432	0
	676	2.6180	0	0	-4432	0
	677	2.8798	0	0	-4432	0
	678	3.1416	0	0	-2218	0
	679	0.0000	0	0	-2050	0
	680	0.2618	0	0	-4101	0
	681	0.5236	0	0	-4101	0
	682	0.7854	0	0	-4101	0
	683	1.0472	0	0	-4101	0
	684	1.3090	0	0	-4101	0
	685	1.5708	0	0	-4101	0
	686	1.8326	0	0	-4101	0
	687	2.0944	0	0	-4101	0
	688	2.3562	0	0	-4101	0
	689	2.6180	0	0	-4101	0
	690	2.8798	0	0	-4101	0
	691	3.1416	0	0	-2050	0
	692	0.0000	0	0	-2972	0
	693	0.2618	0	0	-5945	0
	694	0.5236	0	0	-5945	0
	695	0.7854	0	0	-5945	0
	696	1.0472	0	0	-5945	0
	697	1.3090	0	0	-5945	0
	698	1.5708	0	0	-5945	0
	699	1.8326	0	0	-5945	0
	700	2.0944	0	0	-5945	0
	701	2.3562	0	0	-5945	0
	702	2.6180	0	0	-5945	0

PAYLOAD INERTIA (continued)

SUB-STRUCT. NO.	F.E.M. NODE NO.	ANGULAR LOCATION θ (rad)	RADIAL FORCE F_R (lbs)	TANGENTIAL FORCE F_T (lbs)	AXIAL FORCE F_Z (lbs)	GLOBAL-X FORCE(1) F_X (lbs)
2	703	2.8798	0	0	-5945	0
	704	3.1416	0	0	-2972	0
	705	0.0000	0	0	-2319	0
	706	0.2618	0	0	-4642	0
	707	0.5236	0	0	-4642	0
	708	0.7854	0	0	-4642	0
	709	1.0472	0	0	-4642	0
	710	1.3090	0	0	-4642	0
	711	1.5708	0	0	-4642	0
	712	1.8326	0	0	-4642	0
	713	2.0944	0	0	-4642	0
	714	2.3562	0	0	-4642	0
	715	2.6180	0	0	-4642	0
	716	2.8798	0	0	-4642	0
	717	3.1416	0	0	-2319	0
	718	0.0000	0	0	-509	0
	719	0.2618	0	0	-1014	0
	720	0.5236	0	0	-1014	0
	721	0.7854	0	0	-1014	0
	722	1.0472	0	0	-1014	0
	723	1.3090	0	0	-1014	0
	724	1.5708	0	0	-1014	0
	725	1.8326	0	0	-1014	0
	726	2.0944	0	0	-1014	0
	727	2.3562	0	0	-1014	0
	728	2.6180	0	0	-1014	0
	729	2.8798	0	0	-1014	0
	730	3.1416	0	0	-509	0
3	1081	0.0000	0	0	-615	0
	1082	0.1047	0	0	-1230	0
	1083	0.2094	0	0	-1230	0
	1084	0.3142	0	0	-1230	0
	1085	0.4189	0	0	-1230	0
	1086	0.5236	0	0	-1230	0
	1087	0.6283	0	0	-1230	0
	1088	0.7330	0	0	-1230	0
	1089	0.8378	0	0	-1230	0
	1090	0.9425	0	0	-1230	0
	1091	1.0472	0	0	-1230	0
	1092	1.3090	0	0	-1230	0
	1096	1.5708	0	0	-615	0
	1097	0.0000	0	0	-1730	0
	1098	0.1047	0	0	-3460	0
	1099	0.2094	0	0	-3460	0
	1100	0.3142	0	0	-3460	0
	1101	0.4189	0	0	-3460	0
	1102	0.5236	0	0	-3460	0
	1103	0.6283	0	0	-3460	0
	1104	0.7330	0	0	-3460	0
	1105	0.8378	0	0	-3460	0
	1106	0.9425	0	0	-3460	0
	1107	1.0472	0	0	-3460	0
	1108	1.3090	0	0	-3460	0
	1112	1.5708	0	0	-1730	0
	1113	0.0000	0	0	-2638	0

PAYLOAD INERTIA (continued)

SUB-STRUCT. NO.	F.E.M. NODE NO.	ANGULAR LOCATION θ (rad)	RADIAL FORCE F_R (lbs)	TANGENTIAL FORCE F_T (lbs)	AXIAL FORCE F_Z (lbs)	GLOBAL-X FORCE(1) F_X (lbs)
3	1114	0.2618	0	0	-5275	0
	1118	0.5236	0	0	-5275	0
	1119	0.7854	0	0	-5275	0
	1123	1.0472	0	0	-5275	0
	1124	1.3090	0	0	-5275	0
	1128	1.5708	0	0	-2638	0
4	281	0.0000	337	0	0	337
	282	0.1047	671	0	0	667
	283	0.2094	659	0	0	645
	284	0.3142	641	0	0	610
	285	0.4189	616	0	0	563
	286	0.5236	584	0	0	506
	287	0.6283	545	0	0	441
	288	0.7330	501	0	0	372
	289	0.8378	451	0	0	302
	290	0.9425	396	0	0	233
	291	1.0472	337	0	0	169
	292	1.3090	274	0	0	71
	381	0.0000	421	0	0	421
	382	0.1047	838	0	0	834
	383	0.2094	825	0	0	807
	384	0.3142	802	0	0	762
	385	0.4189	770	0	0	704
	386	0.5236	730	0	0	632
	387	0.6283	682	0	0	552
	388	0.7330	626	0	0	466
	389	0.8378	564	0	0	377
	390	0.9425	495	0	0	291
	391	1.0472	421	0	0	211
	392	1.3090	343	0	0	89
	393	1.5708	261	0	0	0
	394	1.8326	175	0	0	-45
	395	2.0944	88	0	0	-44
	481	2.3562	756	0	0	-535
	482	2.6180	976	0	0	-845
	486	0.2618	1309	0	0	1264
	487	0.7854	714	0	0	505
	491	1.0472	756	0	0	378
	492	1.3090	261	0	0	68
	496	1.5708	53	0	0	0
5	266	0.0000	1113	0	0	1113
	267	0.2618	2151	0	0	2078
	268	0.5236	1929	0	0	1670
	269	0.7854	1575	0	0	1113
	270	1.0472	1113	0	0	557
	271	1.3090	576	0	0	149

PAYLOAD INERTIA (continued)

SUB-STRUCT. NO.	F.E.M. NODE NO.	ANGULAR LOCATION θ (rad)	RADIAL FORCE F_R (lbs)	TANGENTIAL FORCE F_T (lbs)	AXIAL FORCE F_Z (lbs)	GLOBAL-X FORCE(1) F_X (lbs)
5	366	0.0000	2356	0	0	2356
	367	0.2618	4551	0	0	4396
	368	0.5236	4081	0	0	3534
	369	0.7854	3332	0	0	2356
	370	1.0472	2356	0	0	1178
	371	1.3090	1220	0	0	316
	466	0.0000	2629	0	0	2629
	467	0.2618	5079	0	0	4906
	468	0.5236	4554	0	0	3944
	469	0.7854	3718	0	0	2629
	470	1.0472	2629	0	0	1315
	471	1.3090	1361	0	0	352
	566	0.0000	2933	0	0	2933
	567	0.2618	5665	0	0	5472
	568	0.5236	5079	0	0	4399
	569	0.7854	4147	0	0	2932
	570	1.0472	2932	0	0	1466
	571	1.3090	1518	0	0	393
	666	0.0000	3273	0	0	3273
	667	0.2618	6323	0	0	6107
	668	0.5236	5669	0	0	4909
	669	0.7854	4629	0	0	3273
	670	1.0472	3273	0	0	1636
	671	1.3090	1694	0	0	439
	766	0.0000	3651	0	0	3651
	767	0.2618	7054	0	0	6814
	768	0.5236	6325	0	0	5477
	769	0.7854	5164	0	0	3651
	770	1.0472	3651	0	0	1826
	771	1.3090	1890	0	0	489
	866	0.0000	4074	0	0	4074
	867	0.2618	7870	0	0	7602
	868	0.5236	7056	0	0	6111
	869	0.7854	5761	0	0	4074
	870	1.0472	4074	0	0	2037
	871	1.3090	2109	0	0	546
	966	0.0000	4547	0	0	4547
	967	0.2618	8783	0	0	8484
	968	0.5236	7875	0	0	6820
	969	0.7854	6430	0	0	4547
	970	1.0472	4547	0	0	2273
	971	1.3090	2354	0	0	609
	1066	0.0000	4795	0	0	4795
	1067	0.2618	9264	0	0	8948
	1068	0.5236	8306	0	0	7193
	1069	0.7854	6782	0	0	4795
	1070	1.0472	4795	0	0	2398
	1071	1.3090	2482	0	0	642
	1166	0.0000	4546	0	0	4546
	1167	0.2618	8782	0	0	8482
	1168	0.5236	7873	0	0	6819
	1169	0.7854	6429	0	0	4546
	1170	1.0472	4546	0	0	2273
	1171	1.3090	2353	0	0	609

PAYLOAD INERTIA (continued)

SUB-STRUCT. NO.	F.E.M. NODE NO.	ANGULAR LOCATION θ (rad)	RADIAL FORCE F_R (lbs)	TANGENTIAL FORCE F_T (lbs)	AXIAL FORCE F_Z (lbs)	GLOBAL-X FORCE(1) F_X (lbs)
5	1266	0.0000	4075	0	0	4075
	1267	0.2618	7871	0	0	7603
	1268	0.5236	7057	0	0	6112
	1269	0.7854	5762	0	0	4075
	1270	1.0472	4075	0	0	2037
	1271	1.3090	2109	0	0	546
	1366	0.0000	3651	0	0	3651
	1367	0.2618	7054	0	0	6814
	1368	0.5236	6325	0	0	5477
	1369	0.7854	5164	0	0	3651
	1370	1.0472	3651	0	0	1826
	1371	1.3090	1890	0	0	489
	1466	0.0000	3272	0	0	3272
	1467	0.2618	6321	0	0	6106
	1468	0.5236	5667	0	0	4908
	1469	0.7854	4627	0	0	3272
	1470	1.0472	3272	0	0	1636
	1471	1.3090	1694	0	0	438
	1566	0.0000	2933	0	0	2933
	1567	0.2618	5667	0	0	5474
	1568	0.5236	5081	0	0	4400
	1569	0.7854	4148	0	0	2933
	1570	1.0472	2933	0	0	1467
	1571	1.3090	1518	0	0	393
	1666	0.0000	2628	0	0	2628
	1667	0.2618	5077	0	0	4904
	1668	0.5236	4552	0	0	3942
	1669	0.7854	3717	0	0	2628
	1670	1.0472	2628	0	0	1314
	1671	1.3090	1360	0	0	352
	1766	0.0000	2356	0	0	2356
	1767	0.2618	4551	0	0	4396
	1768	0.5236	4081	0	0	3534
	1769	0.7854	3332	0	0	2356
	1770	1.0472	2356	0	0	1178
	1771	1.3090	1220	0	0	316
	1866	0.0000	2272	0	0	2272
	1867	0.2618	4390	0	0	4241
	1868	0.5236	3936	0	0	3409
	1869	0.7854	3214	0	0	2272
	1870	1.0472	2272	0	0	1136
	1871	1.3090	1176	0	0	304
	1966	0.0000	2318	0	0	2318
	1967	0.2618	4478	0	0	4325
	1968	0.5236	4015	0	0	3477
	1969	0.7854	3278	0	0	2318
	1970	1.0472	2318	0	0	1159
	1971	1.3090	1200	0	0	311
	2066	0.0000	1159	0	0	1159
	2067	0.2618	2239	0	0	2163
	2068	0.5236	2007	0	0	1738
	2069	0.7854	1639	0	0	1159
	2070	1.0472	1159	0	0	579
	2071	1.3090	600	0	0	155

PAYLOAD INERTIA (continued)

SUB-STRUCT. NO.	F.E.M. NODE NO.	ANGULAR LOCATION θ (rad)	RADIAL FORCE F_R (lbs)	TANGENTIAL FORCE F_T (lbs)	AXIAL FORCE F_Z (lbs)	GLOBAL-X FORCE(1) F_X (lbs)
6	113	0	1134	0	0	1134
	114	0.261799	1468	0	0	1418
	118	0.523598	1964	0	0	1701
	119	0.785398	1071	0	0	757
	123	1.047197	1134	0	0	567
	124	1.308996	392	0	0	101
	128	1.570796	79	0	0	0
	313	0	759	0	0	759
	314	0.104719	1509	0	0	1501
	315	0.209439	1484	0	0	1452
	316	0.314159	1443	0	0	1372
	317	0.418879	1386	0	0	1266
	318	0.523598	1314	0	0	1138
	319	0.628318	1227	0	0	993
	320	0.733038	1128	0	0	838
	321	0.837758	1015	0	0	679
	322	0.942477	892	0	0	524
	323	1.047197	759	0	0	379
	513	0	379	0	0	379
	514	0.104719	755	0	0	750
	515	0.209439	742	0	0	726
	516	0.314159	722	0	0	686
	517	0.418879	693	0	0	633
	518	0.523598	657	0	0	569
	519	0.628318	614	0	0	497
	520	0.733038	564	0	0	419
	521	0.837758	508	0	0	340
	522	0.942477	446	0	0	262
	523	1.047197	379	0	0	190
	524	1.308996	309	0	0	80
TOTALS					-580,256	385,406

GENERAL NOTES:

(1) $F_X = F_R \cos\theta - F_T \sin\theta$

IMPACT-LIMITER INERTIA

SUB-STRUCT. NO.	F.E.M. NODE NO.	ANGULAR LOCATION θ (rad)	RADIAL FORCE F_R (lbs)	TANGENTIAL FORCE F_T (lbs)	AXIAL FORCE F_Z (lbs)	GLOBAL-X FORCE(1) F_X (lbs)
6	1001	0.0000	1389	0	-2124	1389
	1002	0.1047	2763	-290	-4250	2778
	1003	0.2094	2717	-578	-4250	2778
	1004	0.3142	2642	-858	-4250	2778
	1005	0.4189	2538	-1130	-4250	2778
	1006	0.5236	2406	-1389	-4250	2778
	1007	0.6283	2247	-1633	-4250	2778
	1008	0.7330	2064	-1859	-4250	2778
	1009	0.8378	1859	-2064	-4250	2778
	1010	0.9425	1633	-2247	-4250	2778
	1011	1.0472	1389	-2406	-4250	2778
	1012	1.1519	1130	-2538	-4250	2778
	1013	1.2566	858	-2642	-4250	2778
	1014	1.3614	578	-2717	-4250	2778
	1015	1.4661	290	-2763	-4250	2778
	1016	1.5708	0	-1389	-2124	1389
7	507	1.5708	0	-3472	-5312	3472
	508	1.8326	-1797	-6708	-10624	6945
	509	2.0944	-3472	-6014	-10624	6945
	510	2.3562	-4911	-4911	-10624	6945
	511	2.6180	-6014	-3472	-10624	6945
	512	2.8798	-6708	-1798	-10624	6945
	513	3.1416	-3472	0	-5312	3472
TOTALS					-127,488	83,337

GENERAL NOTES:

(1) $F_X = F_R \cos\theta - F_T \sin\theta$

COMPARISON OF THE APPLIED LOADING TO THE ACTUAL LOADING

(a) Impact Limiter Reaction

ΣF_x = -1,259,391 lbs.
ΣF_z = -1,927,723 lbs.

Applied Unit Load = $\sqrt{\sum F_x^{\,2} + \sum F_z^{\,2}}$
= $\sqrt{1{,}259{,}391^2 + 1{,}927{,}723^2}$
= 2,302,647 lbs.
Load Multiplier for S.E.2, S.E.3, S.E.4 and S.E.5 = 1.0135
Applied Vertical Load = 1.0135 x 2,302,647
= 2,333,733 lbs.
Actual Vertical Load = (Cask Mass + Payload Mass + Lower Impact Limiter Mass) x Deceleration
= (20,894 + 10,000 + 2,100) lbs. x 71.13 g's
= 2,346,863 lbs.
Percentage Difference = -0.56%

(b) Payload Inertia

ΣF_x = 385,406 lbs.
ΣF_z = 580,256 lbs.

Applied Unit Load = $\sqrt{\sum F_x^{\,2} + \sum F_z^{\,2}}$
= $\sqrt{385{,}406^2 + 580{,}256^2}$
= 696,585 lbs.
Load Multiplier for S.E.2, S.E.3, S.E.4 and S.E.5
S.E.6 and S.E.7 = 1.00
Applied Vertical Load = 1.00 x 696,585 lbs.
= 696,585 lbs.
Actual Vertical Load = (Payload Mass x Deceleration
= 10,000 lbs. x 71.13 g's
= 711,300 lbs.
Percentage Difference = -2.07%

(c) Impact Limiter Inertia

ΣF_x = -83,337 lbs.
ΣF_z = -127,499 lbs.

Applied Unit Load = $\sqrt{\sum F_x^{\ 2} + \sum F_z^{\ 2}}$
= $\sqrt{83{,}337^2 + 127{,}488^2}$
= 152,309 lbs.
Load Multiplier for S.E.6 and S.E.7 = 1.00
Applied Vertical Load = 1.00 x 152,309 lbs.
= 152,309 lbs.
Actual Vertical Load = (Impact Limiter Mass x Deceleration
= 2,100 lbs x 71.13 g's
= 149,373 lbs.
Percentage Difference = +1.97%

(c) Cask Inertia is applied as the uniform body force over the entire volume of the cask. A unit deceleration in x and z-directions equal to 100 g's has been applied to formulate the load vectors. The following multipliers are applied to account for the actual deceleration of 71.13 g's along the C.G.-over-corner direction (α = 33.43° with the axial direction). Correction is also applied to account for representing the curved surface by a combination of flat surfaces.

X-DIRECTION LOADING

Load Multiplier S.E.1 $= \frac{39.19}{100} x \frac{\theta}{\sin\theta}$

$= \frac{39.19}{100} x \frac{15/57.3}{\sin 15^o}$

$= 0.3963$

Load Multiplier S.E.2 $= \frac{39.19}{100} x \frac{\theta}{\sin\theta}$

$= \frac{39.19}{100} x \frac{15/57.3}{\sin 15^o}$

$= 0.3963$

Load Multiplier S.E.3 $= \frac{39.19}{100} x \frac{\theta}{\sin\theta}$

$= \frac{39.19}{100} x \frac{6/57.3}{\sin 6^o}$

$= 0.3925$

Load Multiplier S.E.4 $= \frac{39.19}{100} x \frac{\theta}{\sin\theta}$

$= \frac{39.19}{100} x \frac{6/57.3}{\sin 6^o}$

$= 0.3925$

Load Multiplier S.E.5 $= \frac{39.19}{100} x \frac{\theta}{\sin\theta}$

$= \frac{39.19}{100} x \frac{15/57.3}{\sin 15^o}$

$= 0.3963$

Load Multiplier S.E.6 $= \frac{39.19}{100} x \frac{\theta}{\sin\theta}$

$= \frac{39.19}{100} x \frac{6/57.3}{\sin 6^o}$

$= 0.3925$

Load Multiplier S.E.7 $= \frac{39.19}{100} x \frac{\theta}{\sin\theta}$

$= \frac{39.19}{100} x \frac{15/57.3}{\sin 15^o}$

$= 0.3963$

Z-DIRECTION LOADING

Load Multiplier S.E.1 $= \frac{59.36}{100} x \frac{\theta}{\sin\theta}$

$= \frac{59.36}{100} x \frac{15/57.3}{\sin 15^o}$

$= 0.6004$

Load Multiplier S.E.2 $= \frac{59.36}{100} x \frac{\theta}{\sin\theta}$

$= \frac{59.36}{100} x \frac{15/57.3}{\sin 15^o}$

$= 0.6004$

Load Multiplier S.E.3 $= \frac{59.36}{100} x \frac{\theta}{\sin\theta}$

$= \frac{59.36}{100} x \frac{15/57.3}{\sin 6^o}$

$= 0.5947$

Load Multiplier S.E.4 $= \frac{59.36}{100} x \frac{\theta}{\sin\theta}$

$= \frac{59.36}{100} x \frac{15/57.3}{\sin 6^o}$

$= 0.5947$

$$\text{Load Multiplier S.E.5} = \frac{59.36}{100} x \frac{\theta}{\sin\theta}$$
$$= \frac{59.36}{100} x \frac{15/57.3}{\sin 15^o}$$
$$= 0.6004$$

$$\text{Load Multiplier S.E.6} = \frac{59.36}{100} x \frac{\theta}{\sin\theta}$$
$$= \frac{59.36}{100} x \frac{15/57.3}{\sin 6^o}$$
$$= 0.5947$$

$$\text{Load Multiplier S.E.7} = \frac{59.36}{100} x \frac{\theta}{\sin\theta}$$
$$= \frac{59.36}{100} x \frac{15/57.3}{\sin 15^o}$$
$$= 0.6004$$

ATTACHMENT 3

PRIMARY LID BOLT CONFIRMATORY CALCULATIONS

Confirmatory calculations for the primary lid bolt loads during 30' corner drop conditions have been performed to supplement the computed loads presented in Section 2.7 of the SAR. The bolts stresses are calculated and the allowable criteria using ASME B & PV (ref. 23) Appendix F has been used to show the adequacy of the bolts.

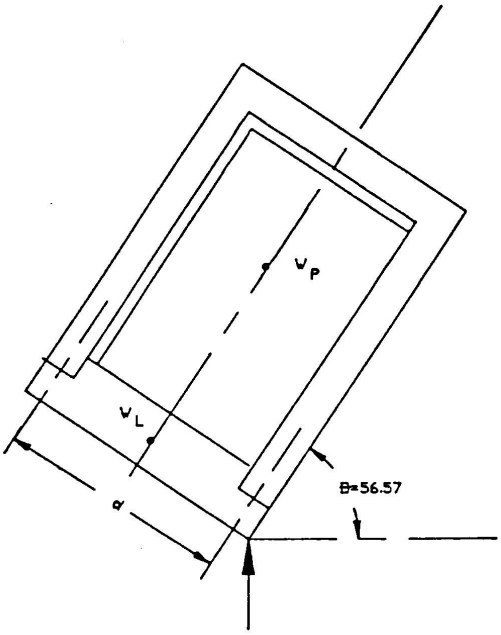

θ	=	Cask orientation wrt horizontal
	=	56.57°
M	=	Total package mass
	=	72,000 lb.
M_p	=	Payload mass
	=	18,000 lb.
M_L	=	Lid mass
		6,200
g	=	'g' load on package
	=	71.13 g's
d	=	Bolt circle diameter
	=	73.625

N = Thrust load on lid = $(M_L + M_p)(g) \sin\theta = 24{,}200\ g \sin\theta$

S = Shear load on lid = $(M_L)(g) \cos\theta = 6{,}200\ g \cos\theta$

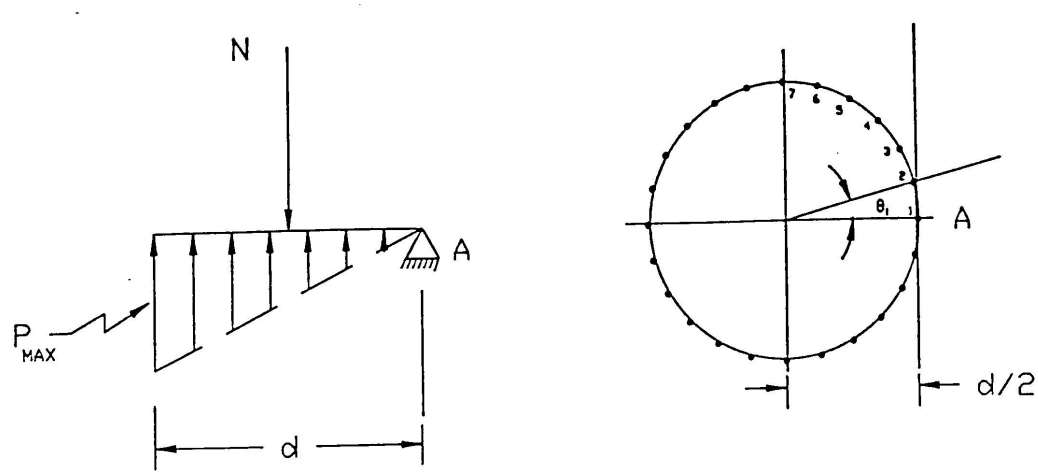

With the 24 bolt configuration, taking moment about point A, we get

$$N\,R = \sum_{i=1}^{24} P_i \times d_i$$

where,

P_i	=	Axial load in the i-th bolt
	=	P_{max} Sin $(\theta_i/2)$
θ_i	=	Angular location of the i-th bolt
d_i	=	Distance of the i-th bolt
	=	R $(1-\cos\theta_i)$
R	=	Bolt circle radius
	=	36.8128”

$$N \times R = P_{max} \times R \sum_{i=1}^{24} \text{Sin}\,(\theta_i/2)\,(1-\cos\theta_i)$$

$N = 20.732\ P_{max}$

P_{max} = (24,200 x 71.13 x Sin 56.57°)/20.372

= 70,517 lbs.

Bolt Normal Stress, σ = 70,517/2.0792

= 33,915 psi

Bolt Shear Stress, τ = (6,200 x 71.13 x cos 56.57°)/(2.0792 x 24)
= 4,869 psi

The allowable stresses in the bolts are calculated per article F-1335 of ASME B & PV code (Reference 23). For a combined tensile and shear stress, the acceptability criteria is:

$$(f_t/F_{tb})^2 + (f_v/F_{vb})^2 \# 1.0$$

where,

f_t	=	computed tensile stress
f_v	=	computed shear stress
F_{tb}	=	allowable tensile stress
	=	smaller of ($0.7S_u$ and S_y)
	=	105,000 psi
F_{vb}	=	allowable shear stress
	=	smaller of 0.42 S_u and 0.6 S_y)
	=	63,000 psi

therefore, left hand side of the inequality is:

$$(33{,}915/105{,}000)^2 + (4{,}869/63{,}000)^2 = 0.1103 < 1.0 \text{ (Satisfied)}$$

ATTACHMENT 4

PROCEDURE FOR EVALUATION OF NODAL FORCES APPLIED TO THE ANSYS FINITE ELEMENT MODEL FROM THE CASKDROP OUTPUT

The CNSI proprietary programs, CORNVT, CORNIL and PAYLOAD are simple FORTRAN Programs which evaluate the nodal forces to be applied to the finite element model for 30-foot corner over C.G. drop case using the output of CASKDROP program. The program has been verified and documented according to the CNSI Quality Assurance procedure. In this attachment, a sample hand calculation using the logic of the program has been performed to calculate the nodal forces on a representative node. The node selected is Node No. 302 of super element 5 (see Figure A2-17) for this node.

X	=	37.309 inch		
Y	=	9.9968 inch		
Z	=	8.1625 + 2.5 + 3	=	13.6625 inch

In the CASKDROP coordinate system, this node has coordinates:

X'	=	(x-51) Cosθ + (z + 19) Sinθ
	=	(37.309-51) Cos 33.43° + (13.6625 + 19) Sin 33.43°
	=	6.568 inch
Y'	=	9.9968 inch

Area associated with each footprint

A' = 11.65236 in^2 (see page A1-16)

This node lies between CASKDROP nodes X(8) = 4.50 , X(9) = 8.156, Y(4) = 9.563
And Y(5) = 12.750, where forces are as follows:

			X(8) = 4.50	X(9) = 8.156
Y(4)	=	9.563	28,401	19.434
Y(5)	=	12.750	26,126	0

Or, in terms of pressure

			X(8) = 4.50	X(9) = 8.156
Y(4)	=	9.563	2,437	1,668
Y(5)	=	12.750	2,242	0

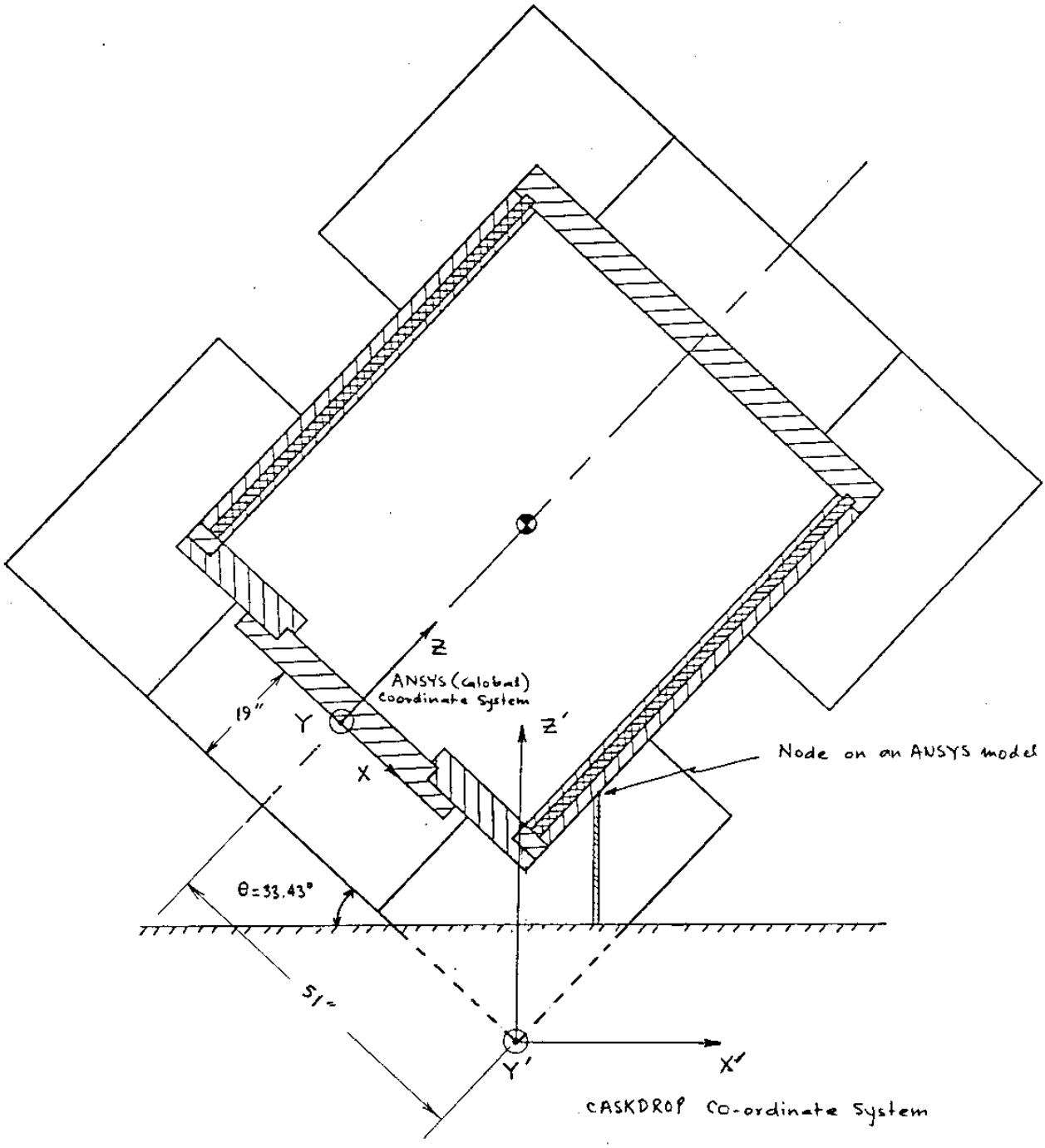
Z
ANSYS (Global)
Coordinate System
19"
Y
X
Z'
Node on an ANSYS model
θ=33.43°
Y'
X'
CASKDROP Co-ordinate System

These pressures are interpolated at the ANSYS node as follows:

	p (6.568, 9.563) =	2,002 psi
	p (6.568, 12.750) =	974 psi
therefore	p (6.568, 9.9968) =	1,862 psi

The other ANSYS nodes in the vicinity of node 302 are as shown below:

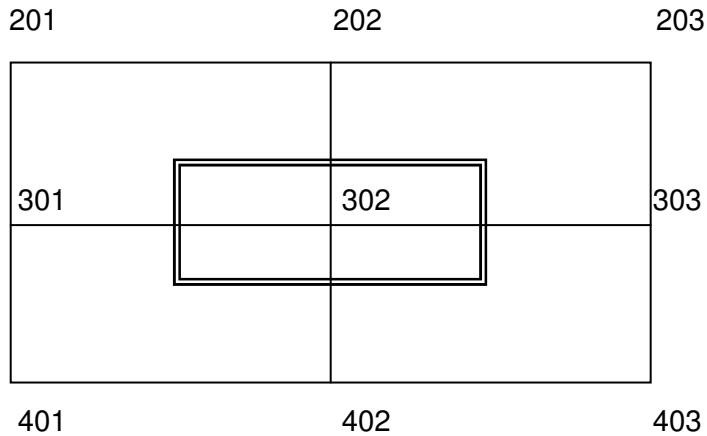

The area associated with ANSYS node 302 is as shown in the sketch and is calculated as follows:

$$A = \left(\frac{Y_{203} - Y_{201}}{2}\right) x \left(\frac{Z_{401} - Z_{201}}{2}\right) x \sin 33.43^o$$

$$= \left(\frac{38.625 x \pi / 6}{2}\right) x \left(\frac{11.133 - 5.50}{2}\right) x \sin 33.43^o$$

$$= 15.69 \text{ in}^2$$

Total vertical force at Node 302	=	1,862 x 15.69
	=	29,215 lbs.
Axial component of the load, F_z	=	29,215 x Cos 33.43°
	=	24,382 lbs.
Applied ANSYS load	=	25,574 lbs. (see page A2-20)
Global x component load	=	29,215 x Sin 33.43°
	=	16,095 lbs.
Radial component of load, F_r	=	-16,095 x Cos 15°
	=	-15,547 lbs.
Applied ANSYS load in the nodel	=	-16,148 lbs. (see page A2-20)
Tangential component of load, F_T	=	16,095 x Sin 15°
	=	4,166 lbs.
Applied load in the nodel	=	4,327 lbs. (see page A2-20)

It can be seen that the load calculated by the program CORNVT, within the accuracy of hand calculation, is correct.

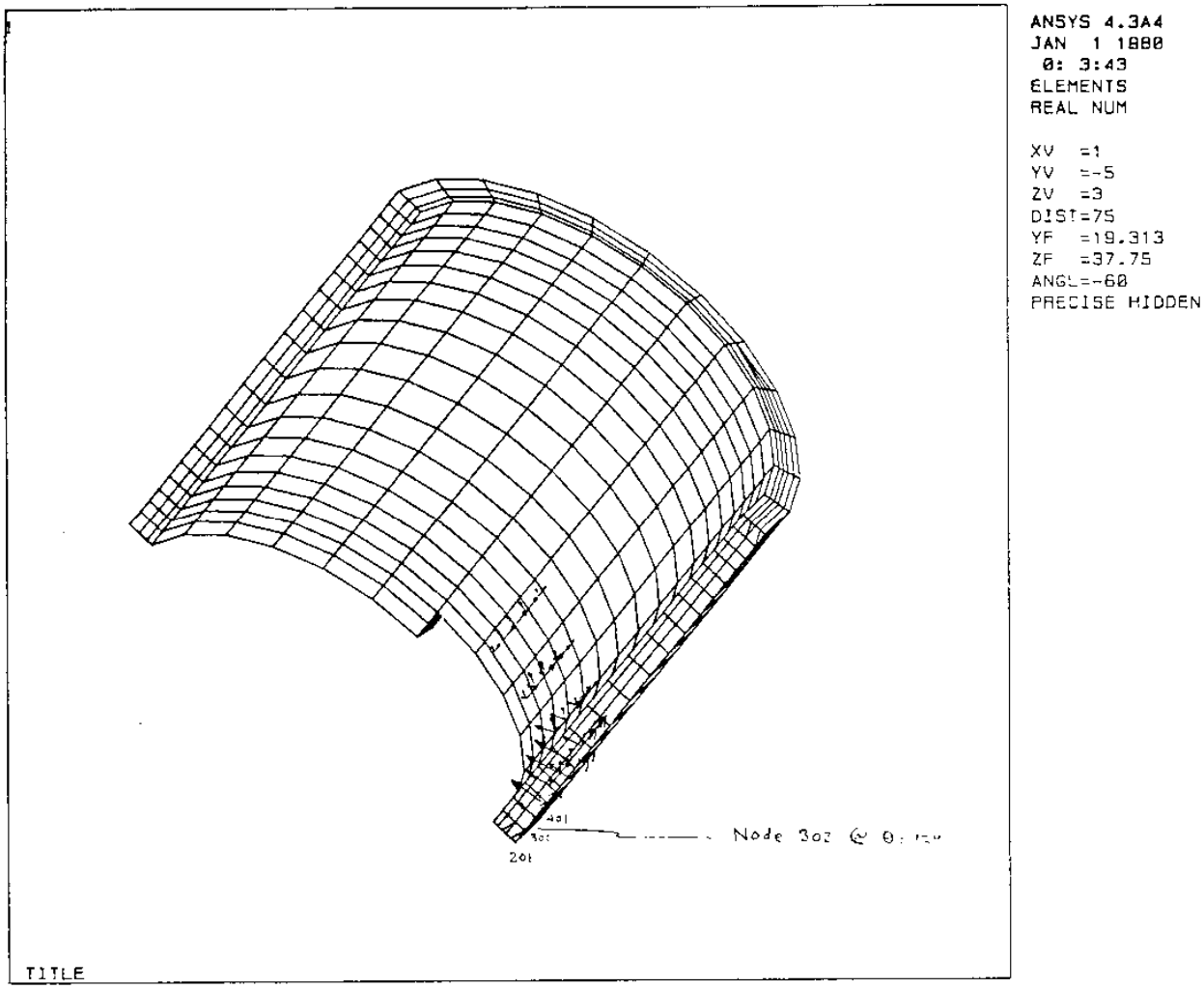

APPLIED IMPACT LIMITER NODAL FORCES
TO SUPPER ELEMENT NO. 5 FOR CORNER DROP ANALYSIS

Attachment 5

SUPPLEMENTAL ANALYSIS FOR HYPOTHETICAL FIRE ACCIDENT CONDITIONS

The structural analyses of the 10-160B cask during the hypothetical fire accident conditions have been performed in Section 2.10.3.2 using the assumption that the cask cavity consists of dry (instead of moist) air. An internal pressure of 7.3 psig is obtained using this assumption. If the cask cavity is assumed to have saturated water vapor, the calculated internal pressure is 31.2 psig (see Section 3.5.4).

In these supplemental calculations, the stresses in the cask body have been calculated combing the two conditions (i.e. the maximum temperatures and maximum internal pressure). The cask internal pressure is conservatively increased to 94.3 psig. The stresses presented in this section have been calculated by adding the stress intensities of Table A2-37 and A2-38 ratioed by a factor of 94.3/10 = 9.43 psig. This is conservative because the stress intensities in Tables A2-41 and A2-42 do already include an internal pressure of 7.3 psig.

It is shown that even with the conditions of maximum temperatures and pressure, the 10-160B cask has sufficient margin of safety against the allowable stresses.

TABLE A5-1
MEMBRANE STRESSES IN VARIOUS COMPONENTS OF THE CASK
INTERNAL PRESSURE OF 94.3 PSIG[1]

Component	Location [2]	Stress Components				Principal Stresses			
		Normal Radial Psi	Normal Axial Psi	Norm Hoop Psi	In-plane psi	S1 psi	S2 psi	S3 psi	S.I. psi
Base plate	A	182	-60	182	0	182	182	-60	242
Outer Shell	B	954	-307	-243	-2	954	-243	-307	1,255
Inner Shell	C	670	-51	-803	65	676	-57	-803	1,479
Bolting Ring	D	-85	1	458	-28	458	9	-93	551
Primary Lid	E	-115	-90	-67	-204	102	-67	-335	409
Secondary Lid	F	-94	-53	-94	0	-53	-94	-94	41

General Notes:

(1) Value of stresses for 94.3 psig (109 psia) are obtained by ratioing the corresponding value form Table A2-37 (page 2-182).

(2) See Figure A2-46 for the locations indicated in this table.

TABLE A5-2
MEMBRANE STRESSES IN VARIOUS COMPONENTS OF THE CASK
INTERNAL PRESSURE OF 94.3 PSIG[1]

Component	Location [2]	Stress Components				Principal Stresses			
		Normal Radial Psi	Normal Axial Psi	Norm Hoop Psi	In-plane psi	S1 psi	S2 psi	S3 psi	S.I. psi
Base plate	A	-3,201	-9	-3,201	0	-9	-3,201	-3,201	3,192
	B	3,565	-11	3,565	0	3,565	3,565	-11	3,675
Outer Shell	C	-53	2,403	587	-2	2,403	587	-53	2,456
	D	823	-2,970	-1,072	2	823	-1,072	-2,970	3,793
Inner Shell	E	900	2,820	105	65	2,821	898	105	2,717
	F	440	-2,891	-1,711	65	441	-1,711	-2,892	3,334
Bolting Ring	G	-261	621	682	-28	682	622	-262	943
	H	-214	-591	234	-28	234	212	-593	827
Primary Lid	I	-2,223	-131	-4,160	-204	-111	-2,242	-4,160	4,048
	J	1,994	-48	4,027	-204	4,027	2,013	-68	4,095
Secondary Lid	K	-3,341	-1	-3,341	0	1	-3,341	-3,341	3,340
	L	3,152	-105	3,152	0	3,152	3,152	-105	3,254

General Notes:

(1) Value of stresses for 94.3 psig (109 psia) are obtained by ratioing the corresponding value form Table A2-38 (page 2-184).

(2) See Figure A2-46 for the locations indicated in this table.

TABLE A.5.3
SUMMARY OF LARGEST SECONDARY STRESS INTENSITY IN THE 10-160B CASK UNDER FIRE ACCIDENT CONDITIONS[1]

Cask Component	Stress Category	S.I. Value (psi)	Allowable[2] (psi)	Safety Factor
Base plate	Membrane	1,499	66,300	44.23
	Membrane+Bending	9,992	66,300	6.64
Outer Shell	Membrane	28,565	66,300	2.32
	Membrane+Bending	42,453	66,300	1.56
Inner Shell	Membrane	38,309	66,300	1.73
	Membrane+Bending	49,404	66,300	1.34
Bolting Ring	Membrane	25,231	66,300	2.63
	Membrane+Bending	31,353	66,300	2.11
Primary Lid	Membrane	10,709	66,300	6.19
	Membrane+Bending	29,285	66,300	2.26
Secondary Lid	Membrane	7,588	66,300	8.74
	Membrane+Bending	20,540	66,300	3.23

NOTES:

(1) These values are calculated using the maximum body temperatures from Section 3 and an internal pressure of 109 psia.

(2) Allowable value for the secondary stresses, per ASME Section III, is $3S_m$ at the at actual temperature.

3. THERMAL EVALUATION

This chapter identifies, describes, discusses, and analyzes the principal thermal engineering design of the 10-160B cask. Compliance with the performance requirements of 10 CFR 71 is demonstrated.

3.1 Discussion

Two components contribute to the thermal protection of the cask body. These components are the impact limiters which provide thermal protection to the top and bottom of the cask and the fire shield which protects the side walls between the impact limiters. The impact limiters are sheet metal enclosures filled with polyurethane foam which acts as an insulation barrier to heat flow. The fire shield is 0.105 inch thick steel plate with a 0.16 inch thick air gap between it and the outer structural shell of the cask. These components reduce the heat load on the cask body during the hypothetical fire accident. Thus, temperatures of the containment and shielding components of the cask are kept within their service limits. Figure 3.1 shows the location of the components considered in the thermal analysis.

Results of the thermal analysis are summarized in Table 3.1. Initial conditions and assumptions are listed in Table 3.2.

The results summarized in Table 3.1 are discussed in detail in Sections 3.4 and 3.5. The decay heat load assumed for all analyses is 200 watts.

An optional steel insert being installed in the cask will have very minor effects on the calculations performed in this Chapter.

Table 3.1
Summary of Thermal Results

Condition	Normal Conditions		Hypothetical Accident		
	Calculated[1] Value	Maximum Allowable	Calculated[1] Value	Analyzed[2]	Maximum Allowable
Maximum temperature difference across the cask body (°F)	0.17	[3]	30.3	45	[3]
Maximum temperature difference across the outer shell (°F)	0.05	[3]	15.3	24	[3]
Maximum temperature difference across the inner shell (°F)	0.03	[3]	1.7	2	[3]
Maximum average wall temperature (°F)	168	[3]	243	334	[3]
Maximum lead temperature (°F)	168	622	243	335	622
Maximum seal (or cask body) temperature (°F)	168	250[4]	252	352	400[5]
Maximum internal pressure (PSIG)	2.7	[3]	4.8	7.3	[3]

NOTES:
(1) The values presented in these columns are the results obtained from the analyses presented in this chapter.
(2) The values presented in these columns are obtained by conservatively increasing the results from the analyses presented in this chapter.
(3) Set by stress considerations.
(4) See Section 3.4.2
(5) See Section 3.5.3

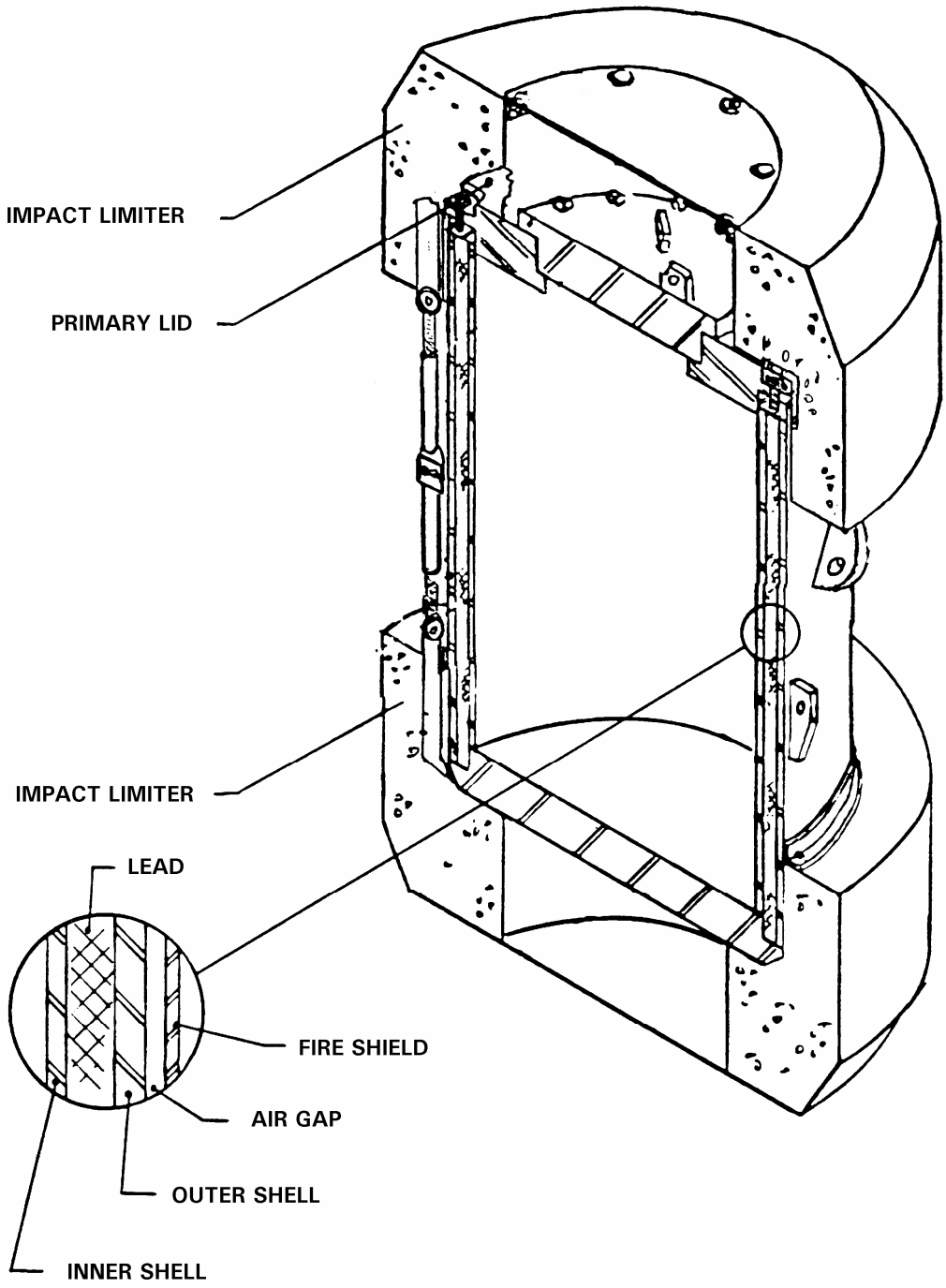

Figure 3.1
Location of Components Analyzed in Thermal Design

Table 3.2

Summary of Initial Conditions and Assumptions

Condition or Assumption	Normal Conditions	Hypothetical Accident
Ambient temperature for radiation (°F)	100	1475 during the fire; 100 thereafter
Ambient temperature for convection (°F)	100	1475 during the fire; 100 thereafter
Insolation (gcal/sq cm)	400	0 during the fire; 400 thereafter
Outside surface emissivity	0.8	0.8
Environment emissivity	0.9	0.9
Gap surfaces emissivity	0.15	0.15

3.2 Summary of Thermal Properties of Materials

Thermal properties of the materials included in the thermal model of the cask are shown in Table 3.3 (a) and 3.3 (b). The properties of the elastomer seals will vary depending on the type of elastomer used. The elastomer chosen for use shall have thermal properties such that the usable temperature range meets or exceeds the range required to meet the Normal Conditions of Transport (minimum= -40ºF, maximum= +250ºF) and meets or exceeds the temperature required to meet the Hypothetical Accident Conditions (+400ºF for 1 hour). The thermal properties may be determined from manufacturer's recommended temperature ranges or from independent testing. An example of manufacturer's recommendations is found in Reference 6. Elastomers that have been evaluated and have passed the criteria listed above are butyl rubber, ethylene propylene rubber, and silicone rubber.

Note that the outside surface of the fire shield must be conservatively assumed to have an emissivity, ε, of at least 0.8 during the fire accident according to the Code of Federal Regulations (10CFR71.73). This same emissivity is used in analyzing the normal conditions of transport.

Table 3.3a

Temperature-Independent Thermal Properties

Material	Property	Ref.:Page	Value
Steel	Density	2:536	488 lb/ft^3
	ε (Outside)	3:648	0.8
	ε (Inside)	4:133	0.15
Lead	Density	2:535	710 lb/ft3
	Spec. Heat	2:535	0.0311 Btu/lb-°F
	Melting Point	5:B-29	621.5 °F

3.3 Technical Specifications of Components

Not applicable.

Table 3.3 (b)
Temperature-Dependent Thermal Properties

Temp.	Stainless Steel		Carbon Steel		Lead	Air		
(°F)	Sp. Heat	Cond.	Sp. Heat	Cond.	Cond.	Dens.	Sp. Heat	Cond.
70	0.117	8.6	0.104	35.1	20.1	0.07518	0.2402	0.01490
100	0.117	8.7	0.106	34.7	19.9	0.07105	0.2404	0.01546
150	0.120	9.0	0.109	34.1	19.7	0.06483	0.2408	0.01686
200	0.122	9.3	0.113	33.6	19.4	0.05992	0.2414	0.01804
250	0.125	9.6	0.115	32.9	19.1	0.05592	0.2421	0.01921
300	0.126	9.8	0.118	32.3	18.8	0.05237	0.2429	0.02032
350	0.128	10.1	0.122	31.6	18.5	0.04892	0.2438	0.02141
400	0.129	10.4	0.124	30.9	18.2	0.04619	0.2450	0.02248
450	0.130	10.6	0.126	30.3	17.9	0.04358	0.2461	0.02354
500	0.131	10.9	0.128	29.5	17.7	0.04141	0.2474	0.02457
550	0.132	11.1	0.131	28.8	17.4	0.03936	0.2490	0.02558
600	0.133	11.3	0.133	28.0	17.1	0.03747	0.2511	0.02654
650	0.134	11.6	0.135	27.3	16.8	0.03578	0.2527	0.02749
700	0.135	11.8	0.139	26.6	16.8	0.03422	0.2538	0.02843
750	0.136	12.0	0.142	25.9	16.8	0.03280	0.2552	0.02933
800	0.136	12.2	0.146	25.2	16.8	0.03141	0.2568	0.03022
900	0.138	12.7	0.154	23.8	16.8	0.02920	0.2596	0.03201
1000	0.139	13.2	0.163	22.4	16.8	0.02715	0.2628	0.03371
1100	0.141	13.6	0.172	20.9	16.8	0.02544	0.2659	0.03532
1200	0.141	14.0	0.184	19.5	16.8	0.02393	0.2689	0.03691
1300	0.143	14.5	0.205	18.0	16.8	0.02254	0.2717	0.03844
1400	0.144	14.9	0.411	16.4	16.8	0.02134	0.2742	0.04011
1500	0.145	15.3	0.199	15.7	16.8	0.02023	0.2766	0.04193

Units:
Specific Heat: BTU/lbm-F
Conductivity: BTU/hr-ft-F
Density: lbm/cu ft

References:
Stainless Steel Properties: Reference 1, Page 88
Carbon Steel Reference 1, Page 83
Lead Properties: Reference 2, Page 535
Air Properties: Reference 2, Page 542

3.4 Thermal Evaluation for Normal Conditions of Transport

3.4.1 Thermal Model

3.4.1.1 Analytical Model. Normal conditions of transport are calculated with a steady state ANSYS (Reference 7) finite element thermal model of the cask. The location of the nodes and elements in the ANSYS model are shown in Figure 3.2. The model is a one-dimensional model through the cask axial midplane.

Cask surfaces which are covered by the impact limiters are given insulated boundary conditions. Convection and radiation are modeled on the fire shield outside surfaces. Equation 1 gives the relationship used to model convection (Reference 4, page 135).

(Equation 1)
$$h = C\left(T_s - T_a\right)^{1/3}$$

where:

C = 0.19 (assumes the cask is vertical)
h = Heat transfer coefficient (BTU/hr-sq ft-F)
T_s = cask surface temperature (Degrees F)
T_a = ambient temperature (Degrees F)

Convection is modeled from a 100°F bulk air temperature and radiation is modeled from a 100°F environment. The 200 watt decay heat load is modeled as a constant heat flux over the exposed side wall inner surface of the cask. The heat flow rate across the inner surface of the cask inner shell set equal to the decay heat load. This is a conservative approximation during the fire transient, since, in reality, some of the heat from the fire would be transferred to the waste. Thus, the waste would act as a heat sink lowering the wall temperature.

Equation 2 (Reference 7, Page 4.31.1) gives the radiation heat transfer equation solved by the model.

(Equation 2)
$$q = \sigma\, \varepsilon\, F\, A \left(T_I^4 - T_J^4\right)$$

where:

q = heat flow rate (BTU/hr)
σ = Stefan-Boltzmann Constant
= 1.7136×10^{-9} (BTU/hr-sq ft-R^4)
ε = emissivity
F = geometric form factor
A = area (sq ft)
T = temperature (°R)
I = first node number
J = second node number

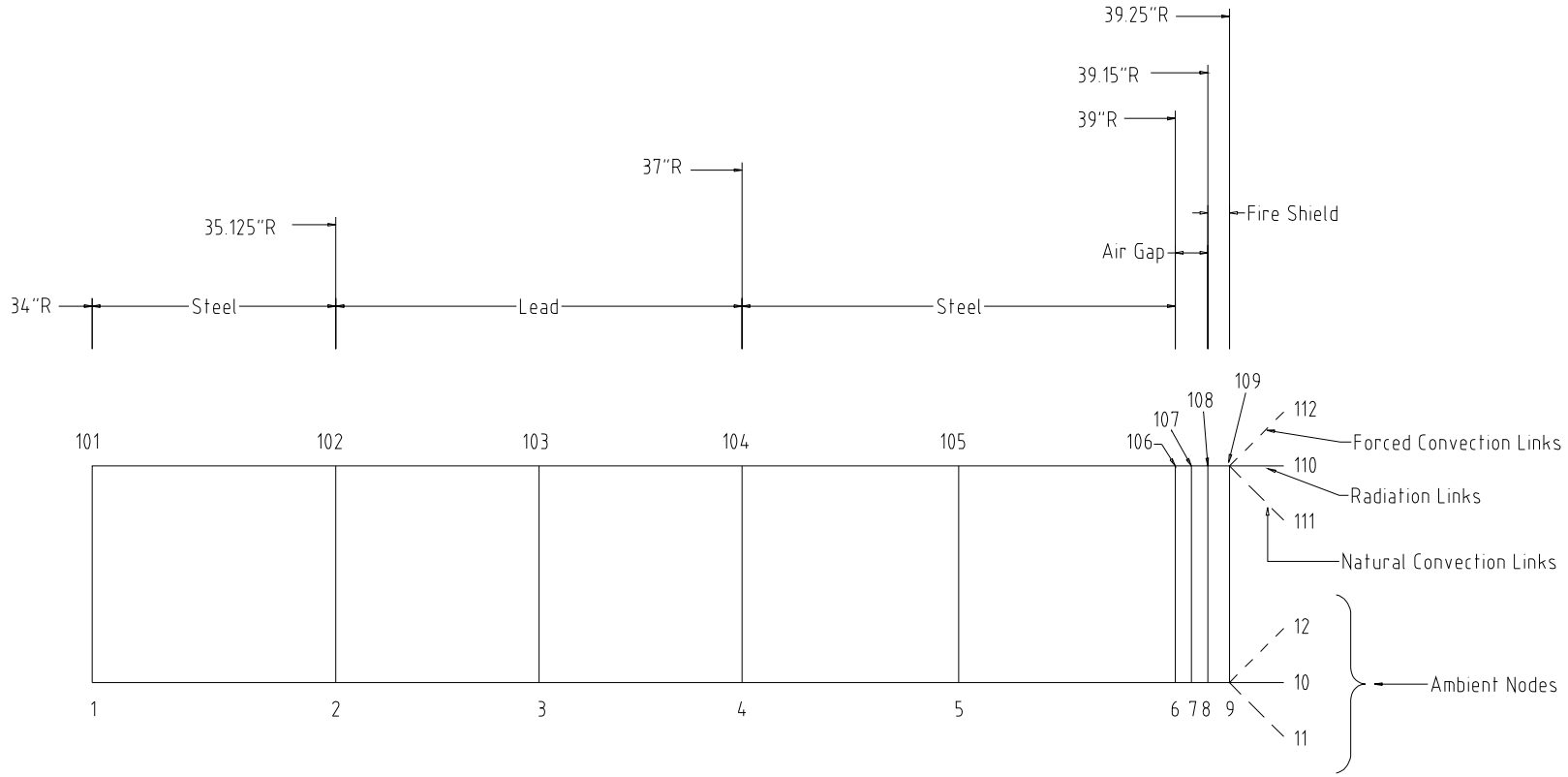

Figure 3.2

Node and Element Locations in the 10-160B Cask
Thermal Finite Element Model

Two radiation heat transfer systems are modeled: (1) radiation heat transfer between the fire shield outside surface and the environment, and (2) radiation between the fire shield inside surface and the structural shell outside surface. Emissivity, area, and geometric form factors are defined in both systems.

The overall emissivity for radiation heat transfer between the fire shield and the environment is set equal to the overall emissivity, ε, for heat transfer between two infinite parallel planes as given by equation 3 (Reference 2, page 336).

(Equation 3)
$$\varepsilon = \frac{\varepsilon_1 \varepsilon_2}{\varepsilon_2 + \varepsilon_1 - \varepsilon_1 \varepsilon_2}$$

where:

ε = overall emissivity
ε_1 = surface 1 emissivity
ε_2 = surface 2 emissivity

The Code of Federal Regulations (10CFR71.73) requires the use of a fire emissivity coefficient of at least 0.9. Thus, an environment emissivity coefficient of 0.9 was assumed in both the normal conditions of transport and in the hypothetical accident. The emissivities of the outside of the fire shield and the environment are 0.8 and 0.9, respectively. Thus, the overall emissivity is calculated by equation 4 to be 0.7347. The area of this radiation heat transfer system is set equal to the area of the outside surface of the fire shield and the geometric form factor is set to 1.0.

Radiation heat transfer between the fire shield inside surface and the structural shell outside surface is approximated by the equation for radiation heat transfer between long concentric cylinders as given by equation 4 (Reference 2, page 336).

(Equation 4)
$$q = \frac{\sigma A_1 \left(T_1^4 - T_2^4\right)}{\frac{1}{\varepsilon_1} + \frac{(A_1)(1/\varepsilon_2 - 1)}{A_2}}$$

The parameters in equation 4 are the same as defined previously and subscripts 1 and 2 refer to the inside cylinder and the outside cylinder, respectively. Since $\varepsilon = \varepsilon_1 = \varepsilon_2$, a form factor may be defined by equation 5 to put equation 4 in the same form as equation 2.

(Equation 5)
$$F = \frac{1}{\varepsilon} \frac{1}{\frac{1}{\varepsilon} + \frac{(A_1)(1/\varepsilon - 1)}{A_2}}$$

The area in equation 2 is set equal to the area of the inside cylinder and the emissivity is set equal to the minimum emissivity of the radiating surfaces, 0.15.

The total insolation is required to be 400 gcal/sq cm for a 12-hour period for curved surfaces according to the Code of Federal Regulations (10CFR71.71). The total insolation of 400 gcal/sq cm is divided by 12 hours of assumed sunlight to yield an average insolation rate. The average insolation rate is then multiplied by the surface emissivity specified in Section 3.2 above (0.8) yielding an insolation rate of 1.897E-4 BTU/sq in/sec. This insolation heat load is applied to the outside surface of the fire shield. Both the ambient air temperature and the environment temperature and the environment temperature are set to 100°F in accordance with the Code of Federal Regulations (10CFR71.71).

3.4.1.2 Test Model. Not applicable.

3.4.2 Maximum Temperatures

The maximum temperature in the cask occurs at the surface of the inside wall of the cask (nodes 1 and 101), and is calculated to be 168°F. This is well within the service temperature of all materials and components used within the cask. The NCT temperature criterion for the seal material is conservatively set at 250°F for continuous use. The minimum temperature is at the outside surface of the fire shield (nodes 9 and 109), and is equal to 161°F. The maximum temperature of the contents depends on the physical characteristics of the particular contents carried. Based on the small temperature gradient within the cask itself (only 0.17°F between inside and outside surfaces), the maximum contents temperature can considered to be 168°F. This temperature is well below that at which damage to the waste might occur.

3.4.3 Minimum Temperature

The waste transported with the cask may not be a heat source, so the minimum temperature the cask can reach is the minimum ambient temperature, -40°F. All components used in the cask are serviceable at this temperature (see Section 3.2).

3.4.4 Maximum Internal Pressures

The maximum internal pressure of the cask is calculated assuming that the gas within the cask, a mixture of air and water vapor, behaves as an ideal gas. The inside surface of the cask is assumed to be dry.

The temperature of the gas mixture within the cask is set equal to the maximum inside surface temperature of the cask. The maximum inside surface temperature of the cask is 168°F on the 100°F day. Assuming that atmospheric pressure, P_2, exists inside the cask at 70°F, the pressure in the cask at 168°F, P_1, may be calculated by the ideal gas relationship given in equation 6.

(Equation 6)

$$P_1 = \frac{T_1}{T_2} * P_2$$

$$P_1 = \frac{(460 + 168\,°R)}{(460 + 70\,°R)} * 14.70\ \text{PSIA}$$

$$P_1 = 17.4\ \text{PSIA}$$

The vapor pressure contributed by water in the cavity at 168°F is 5.7 psia (Reference 10). The gauge pressure in the cask under normal conditions of transport is equal to the absolute pressure of the gas mixture within the cask minus the outside ambient pressure. Equation 7 expresses the maximum gauge pressure for this cask during normal conditions of transport (MNOP).

(Equation 7) 17.4 PSIA + 5.7 PSIA - 14.7 PSIA = 8.4 PSIG

Section 2.6.1 discusses the impact of the internal pressure on cask performance. Pressure calculations for TRU waste transportation are detailed in Appendix 4.10.2.

3.4.5 Maximum Thermal Stresses

The temperature gradient through the side wall under normal conditions of transport is due to the decay heat of 200 watts. The temperature difference between the outside surface of the outer shell and the inside surface of the inner steel shell is only 0.17°F on the 100°F ambient temperature. Stresses resulting from this temperature gradient are insignificant. Section 2.6.1 discusses the effect of thermal stresses in detail.

3.4.6 Evaluation of Package Performance for Normal Conditions of Transport

All temperatures and stresses within the package due to normal conditions of transport are within allowable service ranges for all components and materials used in the cask. Seal temperatures range from -40 to 168°F and are within the required elastomer seal operating region of -40 to 250°F. All structural materials are below their melting points.

The temperature difference between the inside surface of the inner shell and the outside surface of the outer shell is only 0.17°F. Thermal stresses resulting from this thermal gradient are discussed in section 2.6.1. The average temperature at the inside surface of the inner shell and at the outside surface of the outer shell is 168°F. The average wall temperature is also used in the thermal stress calculations of section 2.6.1.

3.5 Hypothetical Accident Thermal Evaluation

3.5.1 Thermal Model

3.5.1.1 Analytical Model. The thermal model used to evaluate the hypothetical accident is identical to the model used to evaluate normal conditions of transport.

Initial conditions for the hypothetical accident are steady state with a 100°F ambient and no convection nor insolation. These initial conditions are consistent with those required by the Code of Federal Regulations for the hypothetical accident (10CRF71.73).

The initial steady state solution is followed by a 0.5 hour fire transient in which the 100°F ambient is replaced by a 1475°F fire temperature as required by the Code of Federal Regulations (10CFR71.73). The effect of the fire is represented by radiative and convective heat flux, the average temperature of which is 1475°F and an emissivity of 0.9. Based on the explanatory material for the IAEA regulations in Safety Series No.37 (Reference 9), the pool fire gas velocity is taken to be 10 m/sec (32.8 ft/sec). The forced convection heat transfer coefficient for large casks, according to Reference 9, is:

$$h = 10 \frac{W}{m^2 \circ C}$$

1 W = 9.4804×10^{-4} Btu/sec
1 m = 39.37 inch
1°C = 1.8°F

Therefore,

$$h = \frac{10 \times 9.4804 \times 10^{-4}}{39.37^2 \times 1.8} = 3.398 \times 10^{-6} \frac{Btu}{sec - in^2 - \circ F}$$

The convective heat transfer per unit area between the cask and the atmosphere, q, is governed by the equation:

(Equation 8) $$q = hA\left(T_s - T_a\right)$$

where:

h = Heat transfer coefficient (BTU/hr-sq ft-F)
A = Area (sq ft)
T_s = cask surface temperature (Degrees F)
T_a = ambient temperature (Degrees F)

Finally, the fire transient is followed by a 1.0 hour cooldown transient. The 1475°F fire temperature is replaced by a 100°F ambient during the cooldown transient. Also, the forced convection is replaced with the natural convection, as described in section 3.4.1 of this SAR. The solar insolation is included during the cooldown.

The ANSYS time increment size is set at 5 seconds. The ANSYS (Reference 7) computer program observes the second derivative of temperature with respect to time (curvature) for each node and automatically increases the time increment when its default transient thermal optimization criterion is met. A total of 65 time increments were required to analyze the hypothetical accident.

3.5.1.2 Test Model Not applicable.

3.5.2 Package Conditions and Environment

Damage to the package caused by free drop and puncture tests will not significantly alter the thermal characteristics of the package. Even after crushing the impact limiters continue to act as thermal barriers.

3.5.3 Package Temperatures

The maximum temperatures in the fire shield, cask structure, and the lead all occur halfway up the cask. Table 3.4 summarizes the location, time of occurrence measured from the start of the fire, and value of the maximum temperature in each cask component. The cask seals are not explicitly modeled. However, the maximum seal temperature will not exceed the maximum temperature of the cask body, 252°F. Thus, the seal temperature is conservatively set equal to the maximum calculated temperature of the cask body plus 100°F for an analyzed maximum of 352°F. The HAC temperature criterion (maximum allowable) for the seal material is conservatively set at 400°F with a duration of 1 hour.

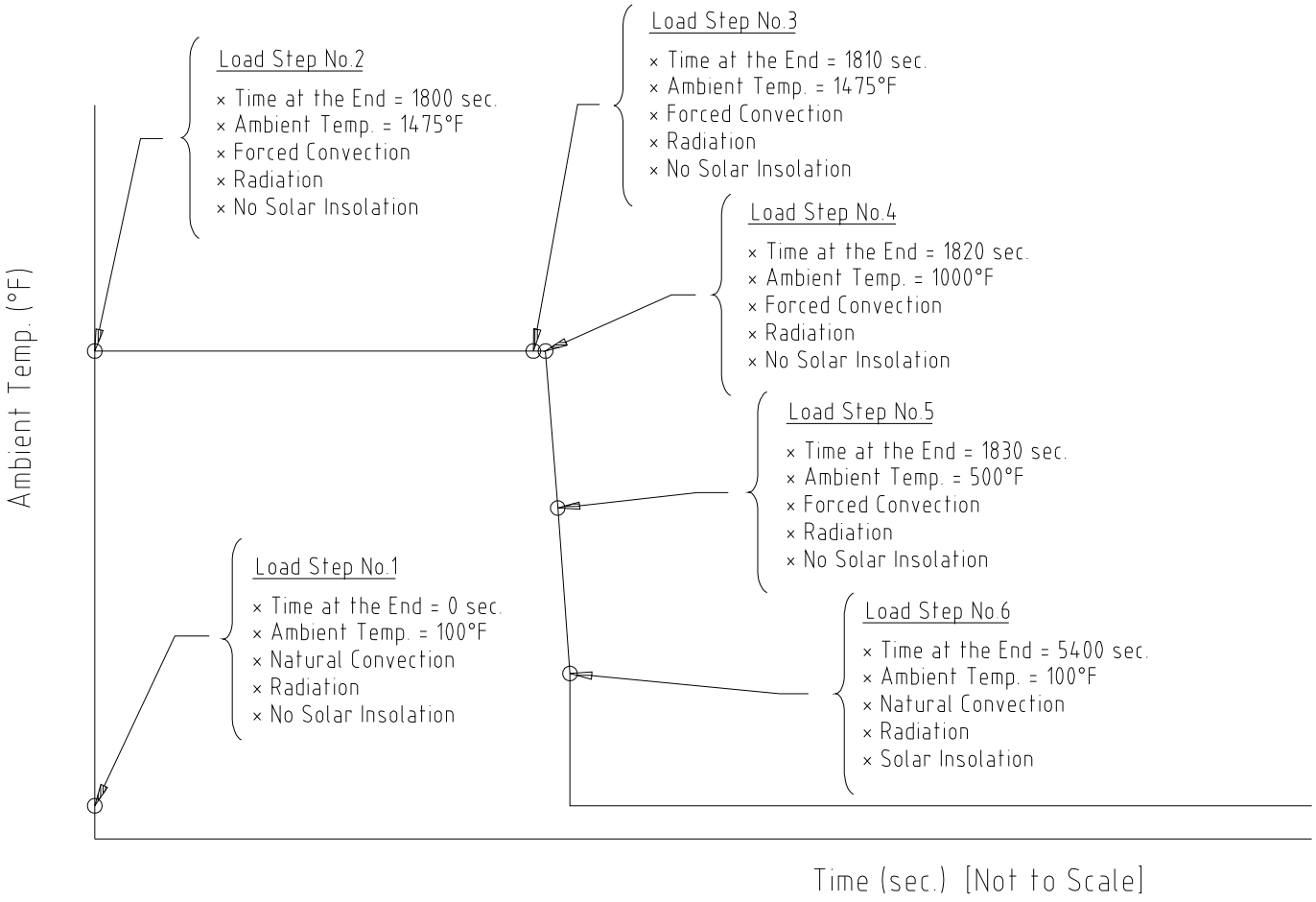

Figure 3.3
Transient Fire Analysis - Load Step and Boundary Conditions Schematic

Table 3.4

Summary of Maximum Hypothetical Accident Temperatures

Component	Maximum Calculated Temp.			Maximum Allowable Temperature (°F)
	Location (Node No.)	Time (sec)	Value (°F)	
Fire Shield	9, 109	1810	1361	N.A.
Structural Shell	6, 106	1845	249	800
Lead	4, 104	2705	240	622
Seals	N.A.	1845	249	400

The maximum calculated temperatures are less than the maximum allowable temperatures for each component. Figure 3.3 plots the temperature during the fire transient of selected points in the model versus time. Figure 3.4 plots the temperature during the subsequent cooldown of the same points.

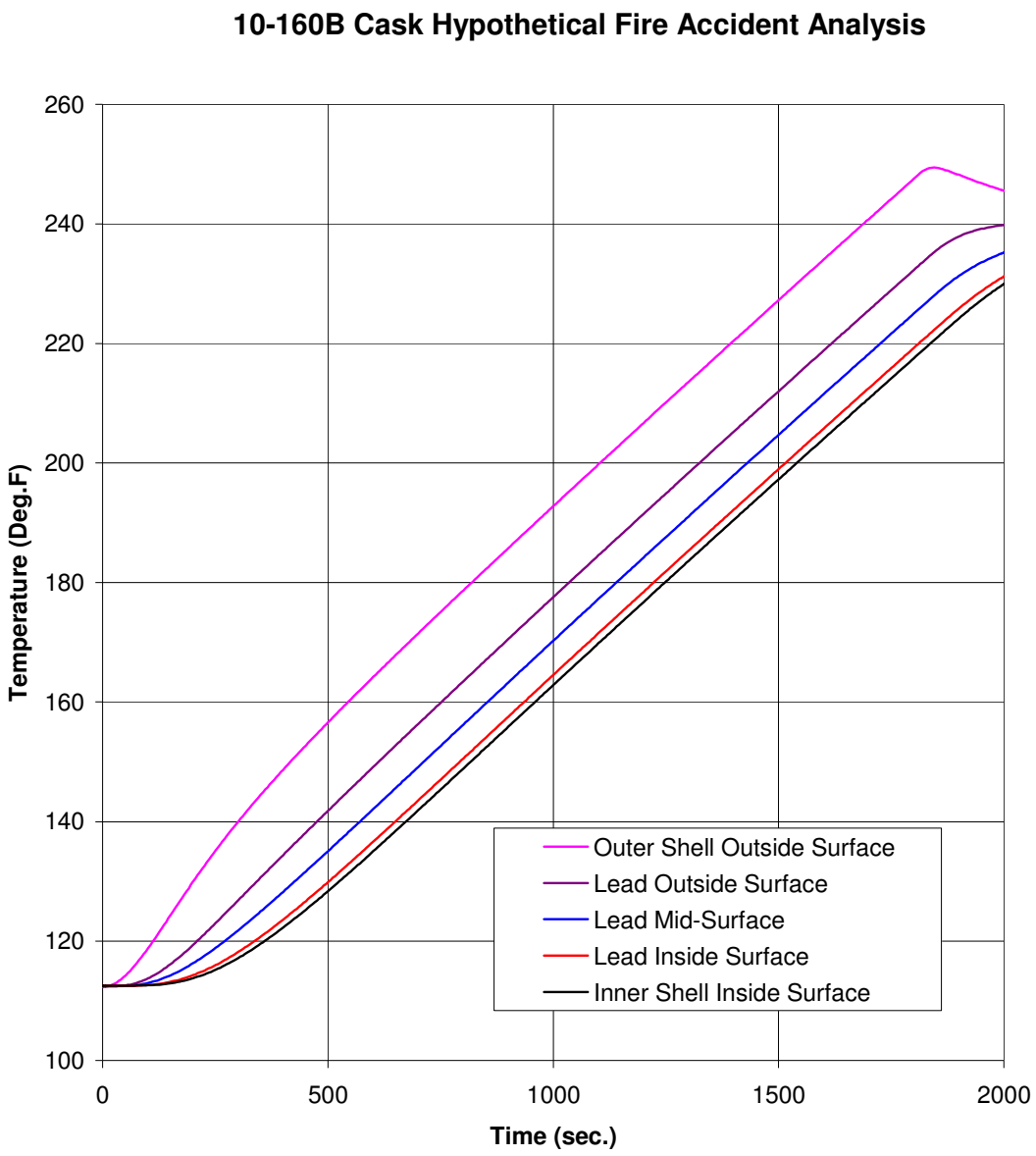

Figure 3.4

Hypothetical Accident - Fire Transient:
Temperature Versus Time

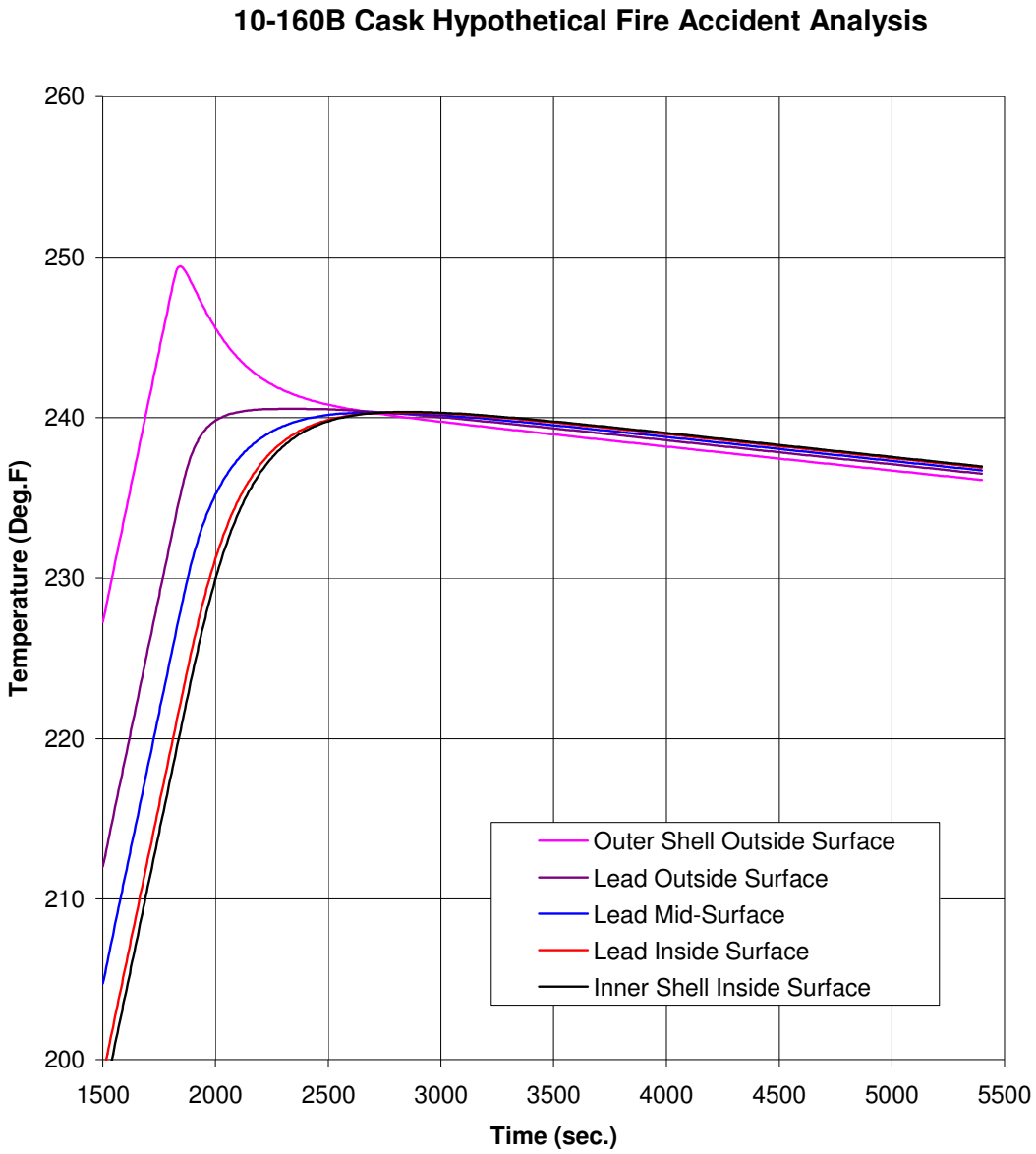

Figure 3.5

Hypothetical Accident - Cooldown:
Temperature Versus Time

3.5.4 Maximum Internal Pressures

The maximum internal pressure of the cask is calculated assuming that the gas within the cask, a mixture of air and water vapor, behaves as an ideal gas. The inside surface of the cask is assumed to be dry.

The temperature of the gas mixture within the cask is set at least equal to the maximum inside surface temperature of the cask. The maximum inside surface temperature of the cask occurs at 0.79 hours after the start of the hypothetical accident. The calculation gives the maximum temperature as 240°F but the gas temperature is conservatively set as 243°F. Assuming that atmospheric pressure exists inside the cask at 70°F, the partial pressure of the gas mixture in the cask at 243°F, P_1, may be calculated by the ideal gas relationship given in equation 8.

(Equation 9)

$$P_1 = \frac{T_1}{T_2} * P_2$$

$$P_1 = \frac{(460 + 243\,°R)}{(460 + 70\,°R)} * 14.70 \text{ PSIA}$$

$$P_1 = 19.5 \text{ PSIA}$$

The vapor pressure contributed by water in the cavity at 243°F is 26.4 psia (Reference 10). The maximum gauge pressure in the cask during the hypothetical accident is equal to the pressure within the cask given by equation 8 minus the outside ambient pressure. Equation 9 expresses the maximum gauge pressure for this cask during the hypothetical accident.

(Equation 10) 19.5 PSIA + 26.4 PSIA - 14.7 PSIA = 31.2 PSIG

The internal pressure of 94.3 PSIG is conservatively used in calculating the effects of combined thermal and pressure loading as discussed in Attachment 5 to Chapter 2.

3.5.5 Maximum Thermal Stresses

The maximum temperature difference between the outside surface of the outer shell and the inside surface of the inner shell during the hypothetical accident is 30° F and occurs 30 minutes after the start of the fire. The maximum temperature difference across the outer shell is 15.3°F (occurring 30 minutes after the start of the fire) and the maximum temperature difference across the inner shell is 1.7°F (occurring 30.5 minutes after the start of the fire). The maximum average cask wall temperature (average of the temperatures at the inside surface of the inner shell and the outside surface of the outer shell) is 240°F and occurs at 45 minutes after the start of the fire. Thermal stresses resulting from temperature gradients during the hypothetical accident are discussed in Section 2.7.3.

3.5.6 Evaluation of Package Performance for the Hypothetical Accident Thermal Conditions

All temperatures within the package due to the hypothetical accident thermal conditions are below maximum allowable limits. Seal temperature is conservatively set equal to the maximum wall temperature of 252°F which occurs at 30 minutes after the start of the fire. This temperature is below the required 400°F HAC temperature limit for the elastomer seals. The maximum lead temperature of 243°F occurs at 0.74 hours after the start of the fire. The maximum lead temperature is well below the 622°F melting point of lead. The steel body is also well below its service limit.

3.6 References

1. ASME Boiler and Pressure Vessel Code an American Standard, Section II, Part B Materials, The American Society of Mechanical Engineers, New York, NY, 1995.

2. Heat Transfer, J.P. Holman, Mc-Graw Hill Book Company, New York, Fifth Edition, 1981.

3. Code of Federal Regulations Title 10 Parts 71, Packaging and Transportation of Radioactive Material, 1998.

4. Cask Designers Guide, L.B. Shappert, et. al, Oak Ridge National Laboratory, February 1970, ORNL-NSIC-68.

5. CRC Handbook of Chemistry and Physics, Robert C. Weast and Melvin J. Astel, eds., CRC Press, Inc., Boca Raton, Florida, 62nd ed., 1981.

6. O-Ring Handbook, Parker Seal Company, Lexington, Kentucky, January 1977.

7. ANSYS Rev. 5.2 Computer Software, ANSYS Inc., Cannonsburgh, Pennsylvania, 1996.

8. IAEA Safety Series No.6, Regulations for the Safe Transport of Radioactive Material, 1985 Edition (As Amended 1990), International Atomic Energy Agency, Vienna, 1990.

9. IAEA Safety Series No.37, Advisory Material for the IAEA Regulations for the Safe Transport of Radioactive Material - 1985 Edition, International Atomic Energy Agency, Vienna, 1990.

10. Chemical Engineers' Handbook, Fifth Edition, Robert H. Perry and Cecil H. Chilton, McGraw-Hill Book Company, 1973.

4. CONTAINMENT

This chapter describes the containment configuration and test requirements for the 10-160B Cask. Both normal conditions of transport and hypothetical accident conditions are discussed.

4.1 Containment Boundary

4.1.1 Containment Vessel

The package containment vessel is defined as the inner shell of the shielded transport cask and the primary and secondary lids together with the associated o-ring seals and lid closure bolts. The inner shell of the cask, or containment vessel, consists of a right circular cylinder of 68 inches inner diameter and 77 inches inside height (nominal dimensions). The shell is fabricated of an outer shell of 2-inch thick steel plate, a 1 7/8 inch layer of lead, and an inner shell of 1 1/8 – inch thick steel. The cylindrical shell is attached at the base to a circular end plate construction with full penetration welds. The primary lid is attached to the cask body with 24, 1 ¾ inch 8 UN bolts. A secondary lid covers the 31 inch opening in the primary lid and is attached to the primary lid using 12, 1¾ inch 8 UN bolts. See Section 4.1.4 for closure details.

4.1.2 Containment Penetrations

There are two penetrations of the containment vessel. These are (1) an optional drain line, and (2) an optional cask vent port located in the secondary lid. The optional drain line is located at the cask base and consists of a ½ inch diameter hole drilled into the stainless steel cask bottom. The optional vent port penetrates the secondary lid into the main cask cavity. Both the vent and drain are sealed at the base of the exterior opening with an elastomer Parker Stat-o-Seal and a cap screw. The exterior openings are plugged by self-sealing Teflon-coated hex socket plugs.

4.1.3 Welds

The containment vessel is fabricated from steel using full penetration welds.

4.1.4 Closure and Seals

The primary lid closure consists of a two layer steel plate construction, stepped to fit over and within the top edge of the cylindrical body. The lid is supported at the perimeter of the cylindrical body by a 3.00-inch thick plate (bolt ring) welded to the top of the inner and outer cylindrical body walls. The lid confines two (2) solid, high temperature elastomer o-rings (Parker or equivalent) in machined grooves. Groove dimensions prevent over-compression of the o-rings by the lid closure bolt preload forces and

hypothetical accident preload forces. The primary lid is attached to the cask body by 24 bolts. The primary lid is fitted with a secondary lid of similar construction attached with 12 bolts. The secondary lid is also sealed with two (2) solid, high temperature elastomer o-rings (Parker or equivalent) in machined grooves. Only the inner o-ring of each lid is part of the containment boundary.

The optional vent penetration, test ports, and drain penetrations are sealed as described in Section 4.1.2. The seal plugs in these penetrations are lockwired prior to each shipment. Table 4.1 gives the torque values for bolts and cap screws.

Table 4.1
Bolt and Cap Screw Torque Requirements

Location	Size	Torque Values +/- 10% (Lubricated)	
		In-lb	Ft-lb
Test Ports (2)	1/2 NPT	144	12
Primary Lid	1-3/4 inch, 8 UN	3600	300
Second Lid	1-3/4 inch, 8 UN	3600	300
Vent Port*	1/2 - 20 UNF	240	20
Drain Port*	1/2 - 20 UNF	240	20

*Optional - These ports may not be installed on cask.

4.2 Containment Requirements for Normal Conditions of Transport

4.2.1 Leak Test Requirements

The 10-160B cask is designed, fabricated, and leak tested to preclude a release of radioactive material in excess of the limits prescribed in NRC Regulatory Guide 7.4, paragraph C and 10CFR71.51(a)(1). The limits on leakage during normal conditions of transport are defined by 10CFR71.51(a)(1).

The leak test procedure must be able to detect leaks of 3.25×10^{-6} ref-cm^3/sec (based on dry air at 25°C with a pressure differential of one atmosphere) to assure compliance with 10CFR71.51(a)(1). A description of the calculational procedure used to determine this value follows.

10CFR71.51(a)(1) states the containment requirements for normal conditions of transport as:

> …no loss or dispersal of radioactive contents, as demonstrated to a sensitivity of 10^{-6} A_2 per hour, no significant increase in external radiation levels, and no substantial reduction in the effectiveness of the packaging;

ANSI N14.5-1997 (Reference 4) states that the permissible leak rate shall be determined by equation 1 (below):

(Equation 1) $$L = \frac{R}{C}$$

where:

L = permissible volumetric leak rate for the medium
R = package containment requirement (Ci/sec)
C = activity per unit volume of the medium that could escape from the containment system

In Section 3.4.4, it is noted that the saturated water vapor in equilibrium at 168 degrees-F and 8.4 psig could exist within the internal shipping containers (liners or drains). It is assumed that these conditions exist within the cask cavity. The containment must limit the leakage of this water vapor to that prescribed in ANSI N14.5. It is very conservative to assume that the concentration of nuclides in the free liquid is equal to that of the solids which comprise the vast majority of material being transported in the cask. This value is determined below:

$$C = \frac{\text{Total Curie Content of Vapor}}{\text{Minimum Void Volume in Cask Cavity}}$$

- Cask curie content = 3000 x A_2 or less
- Free water is limited to restriction of one-percent of solid volume
- Hence the curie content = 0.01 x 3000 A_2
- The minimum void volume occurs when the largest liner is shipped

(Equation 2) $$V\ (\text{cask cavity}) = \frac{\pi}{4} \text{ x } 67.25^2 \text{ x } 75.75 = 269{,}064 \text{ in}^3$$

The largest liner will have at least ¾ inch of radial clearance and a 1½ inch of height difference, giving a volume,

(Equation 3)
$$V\ (\text{liner}) = \frac{\pi}{4} \times (67.25 - 2 \times 0.75)^2 \times (75.75 - 1.5)\ \text{in}^3$$
$$= 252{,}103\ \text{in}^3$$

Void Volume $= 269{,}064 - 252{,}103 = 16{,}961\ \text{in}^3$

$= 16{,}961\ \text{in}^3 \times 16.4\ \text{cm}^3/\text{in}^3$

$= 278{,}161\ \text{cm}^3$

Hence,

(Equation 4)
$$C = \frac{30 A_2\ \text{Ci}}{278{,}161\ \text{cm}^3} = 1.08 \times 10^{-4}\ A_2\ \text{Ci/cm}^3$$

And,

(Equation 5)
$$Ln = \frac{Rn}{C} = \frac{2.78 \times 10^{-10}\ A_2\ \text{Ci/sec}}{1.08 \times 10^{-4}\ A_2\ \text{Ci/cm}^3} \qquad \text{Eqn. 3, Ref. 4}$$
$$= 2.57 \times 10^{-6}\ \text{cm}^3/\text{sec}$$

A leak rate at standard conditions will be calculated which is equivalent to a volumetric leak rate of 2.57 x 10^{-6} cm^3/sec.

EquationsB.3, B.4,and B.5 are used to determine the diameter of hole that would give a leak rate of 2.57 x 10^{-6} cm^3/sec.

$$Lu = (Fc + Fm)(Pu - Pd)\left(\frac{Pa}{Pu}\right) \qquad \text{Eqn. B.5, Reference 4}$$

$$Fm = \frac{3.81 \times 10^3 D^3 \sqrt{\frac{T}{M}}}{a\ Pa} \qquad \text{Eqn. B.4, Reference 4}$$

$$Fc = \frac{2.49 \times 10^6 D^4}{a\ \mu} \qquad \text{Eqn. B.3, Reference 4}$$

where:

L_u = upstream leakage rate, cm^3/sec

μ_{air} = 0.0185cP

T = 168°F = 349°K Section 3.4.4

P_u = 8.4 psig = 1.57 atm

P_d = 1.0 atm

P_a = (1.57 + 1.0)/2 = 1.28 atm

M_{water} = 18 g/gmole

a = length of hole; assume 0.6 cm

The molecular weight of air is 29 g/gmole; using the molecular weight of water here is conservative.

Substituting into Eqns. B.3, B.4, and B.5:

$$Fc = \frac{2.49x10^6 D^4}{(0.6)(0.0185)} = 2.24 \text{ x } 10^8 D^4$$

$$Fm = \frac{3.81x10^3 D^3 \sqrt{\frac{349}{18}}}{(0.6)(1.28)} = 2.18 \text{ x } 10^4 \ D^3$$

$$2.57x10^{-6} = (2.24x10^8 D^4 + 2.18x10^4 D^3)(1.57 - 1.0)\left(\frac{1.28}{1.57}\right)$$ Solve for D

D = 3.74 x 10^{-4} cm

Next, using Equation B.5 from Reference 4, determine the flow of air at standard conditions through a hole of this size. Where:

a = 0.6 cm

M_{air} = 29 g/gmole

μ_{air} = 0.0185 cP

P_u = 1.0 atm

P_d = 0.01 atm

P_a = (1.0 + 0.01)/2 = 0.505 atm

T = 298°K

$$Fc = \frac{(2.49x10^6)(3.74x10^{-4})^4}{(0.6)(0.0185)} = 4.38 \text{ x } 10^{-6} \ \frac{cm^3}{atm - sec}$$

$$F_m = \frac{(3.81x10^3)(3.74x10^{-4})^3\sqrt{\frac{298}{29}}}{(0.60)(0.505)} = 2.11\ x\ 10^{-6} = \frac{cm^3}{atm - sec}$$

Substituting into B.5:

$$L_{std} = (4.38x10^{-6} + 2.11x10^{-6})(1.0 - 0.01)\left(\frac{0.505}{1.0}\right) = 3.25\ x\ 10^{-6}\ \frac{ref\ -\ cm^3}{sec}$$

4.2.2 Pressurization of the Containment Vessel

Section 2.4.4 summarizes normal condition temperatures and pressures within the containment vessel. These pressures and associated temperatures are used to evaluate the integrity of the 10-160B package. None of these conditions reduce the effectiveness of the package containment.

4.2.3 Coolant Containment

Not applicable; there are no coolants in the 10-160B package.

4.2.4 Coolant Loss

Not applicable; there are no coolants in the 10-160B package.

4.3 Containment Requirements for Hypothetical Accident Conditions

4.3.1 Leak Test Requirements

Section 2.7 demonstrates that the 10-160B cask will maintain its containment capability throughout the hypothetical accident conditions. Fission gas products will not be carried within the cask so there can be no release of fission gases. The 10-160B cask is designed, fabricated, and leak tested to preclude a release of radioactive material in excess of the limits prescribed in NRC Regulatory Guide 7.4, paragraph C and 10CFR71.51(a)(2). The limits on leakage during normal conditions of transport are defined by 10CFR71.51(a)(2).

The leak test procedure which assures compliance with leakage during normal conditions of transport will also be sufficient to assure compliance during hypothetical accident conditions. A description follows of the calculational procedure which demonstrates that the maximum leakage requirement during normal conditions of transport is more stringent than the maximum leakage requirement during the hypothetical accident.

10CFR71.51(a)(2) states the containment requirements for the hypothetical accident conditions as:

> … no escape of krypton-85 exceeding 10 A_2 in 1 week, no escape of other radioactive material exceeding a total amount A_2 in 1 week, and no external radiation dose rate exceeding 10 mSv/h (1 rem/h) at 1 m (40 in) from the external surface of the package.

Since the cask does not carry fission products or radioactive gases, only the A_2 per week requirement is limiting. A release of A_2 in one week is equivalent to the activity release rate, R_a, given by equation 9.

(Equation 9)
$$R_a = (A_2/\text{week})(1\ \text{week}/168\ \text{hr})$$
$$= 5.952 \times 10^{-3}\ A_2/\text{hr}$$

In Section 3.5.4, it is noted that the saturated water vapor in equilibrium at 243 degrees-F and 31.2 psig could exist within the internal shipping containers (liners or drains). It is assumed that these conditions exist within the cask cavity. The containment must limit the leakage of this water vapor to that prescribed in ANSI N14.5. It is very conservative to assume that the concentration of nuclides in the free liquid is equal to that of the solids which comprise the vast majority of material being transported in the cask. This value is determined below:

$$C = \frac{\text{Total Curie Content of Vapor}}{\text{Minimum Void Volume in Cask Cavity}}$$

- Cask curie content = 3000 x A_2 or less
- Free water is limited to restriction of one-percent of solid volume
- Hence the curie content = 0.01 x 3000 A_2
- The minimum void volume occurs when the largest liner is shipped

(Equation 10)
$$V(\text{cask cavity}) = \frac{\pi}{4} \times 67.25 \times 75.75 = 269{,}064$$

The largest liner will have at least ¾ inch of radial clearance and a 1½ inch of height difference, giving a volume

(Equation 11) $$V\ (\text{liner}) = \frac{\pi}{4} \times (67.25 - 2 \times 0.75)^2 \times (75.75 - 1.5)\ \text{in}^3$$
$$= 252{,}103\ \text{in}^3$$

Void Volume = 269,064 – 252,103 = 16,961

= 16,961 in^3 x 16.4 cm^3/in^3

= 278,161 cm^3

Hence,

(Equation 12) $$C = \frac{30 A_2\ \text{Ci}}{278{,}161\ \text{cm}^3} = 1.08 \times 10^{-4}\ A_2\ \text{Ci/cm}^3$$

The corresponding volumetric leak rate, L, is calculated by substituting C given by equation 12 and R_a given by equation 9 into equation 1. Equation 13 results from these substitutions.

(Equation 13) $$La = \frac{5.952 \times 10^{-3}\ A_2\ \text{Ci/hr}}{1.08 \times 10^{-4}\ A_2\ \text{Ci/cm}^3} \frac{1\ \text{hr}}{3600\ \text{sec}}$$
$$= 1.53 \times 10^{-2}\ \text{cm}^3/\text{sec}$$

The allowable leak rate during the hypothetical accident is larger than during the normal conditions of transport, 3.25 x 10^{-6} ref-cm^3/sec. Thus, the leak rate for normal conditions of transport is limiting and will determine the maximum permissible leak rate during tests.

4.4 Determination of Test Conditions for Preshipment Leak Test

4.4.1 Test Method

The preshipment leak test is performed using the Gas Pressure Drop Method as shown in A.5.1, Table A-1 of ANSI N14,5-1997. The GAS Pressure Drop test is conducted on the 10-160B by pressurizing the annulus between the O-rings on the primary and secondary lids with dry air or nitrogen. If vent and drain ports are installed, these are tested by pressurizing the ports with dry air or nitrogen.

As required by ANSI N14.5, the test is conducted by holding the test pressure on the component being tested for a prescribed period of time (calculated below) and monitoring for any detectable drop in pressure. ANSI N14.5 – 1997 states (Reference 4, Table 1) that the acceptance criteria for the preshipment leak test is a leakage rate that is either less than the reference air leakage rate, L_R, or no detected leakage when tested to a sensitivity of $1x10^{-3}$ ref-cm^3/sec. This section will show that the requirement of ANSI N14.5 is met by testing to a sensitivity of $1x10^{-3}$ ref-cm^3/sec when performing the Gas Pressure Drop test for 15 minutes (10 minutes for vent or drain lines).

The calculations in 4.4.2 and 4.4.3 below are performed assuming dry air is the test gas, although as indicated in the above paragraph and in Chapter 8, nitrogen may be used as well. If nitrogen is the test gas used, the calculations for the required charge time in 4.4.2 and 4.4.3 below are conservative. Since air is primarily nitrogen, the physical properties of the two gases are very close. However, because the molecular weight and viscosity of nitrogen are slightly less than air's, the pressure drop experienced during the required charge time using nitrogen as the test gas will be slightly greater than for air.

	molecular wt	Viscosity (cP)	(Ref. 8)
air	29.0	.0185	
nitrogen	28.01	.0173	

4.4.2 Determining Required Charge Time for Gas Pressure Drop Test

The preshipment leak test is performed by charging the annulus of the O-rings (of the vent and drain port) with air and holding the pressure for the prescribed time. Any pressure drop larger than the minimum detectable increment on the pressure measuring instrument shall be corrected. In this section the minimum hold time is determined.

The annulus between the O-rings is pressurized with air. The annulus is centered between O-rings and is 1/8" deep and 1/8" wide with a minimum inner diameter of 68-15/16". The minimum volume of the annulus is 55 cm^3.

The required hold time for the Gas Pressure Drop test is determined using Equation 15 below, which is Equation B.14 of ANSI N14.5-1997. The same hold time determined below will be used for both the primary and secondary lids. Since the volume of the secondary lid annulus is approximately 28 cm^3, the test sensitivity will be greater than the primary lid's.

(Equation 15) $$L_R = \frac{V\,T_s}{3600\,HP_s}\left[\frac{P_1}{T_1} - \frac{P_2}{T_2}\right]$$ Eqn B.14, Reference 4

where:

L_R = atm-cm^3/sec of air at standard conditions

V = gas volume in the test annulus cm^3

T_s = reference absolute temperature, 298°K

H = test duration, hours

P_1 = gas pressure in test item at start of test, atm, abs

P_2 = gas pressure in test item at end of test, atm, abs

P_s = standard pressure = 1 atm

T_1 = gas temperature in test item at start of test, ^{o}K

T_2 = gas temperature in test item at end of test, ^{o}K

4.4.3 Required Hold Time at the Test Pressure

As discussed in Section 4.4.1 above, the maximum sensitivity for the preshipment leak test as prescribed in ANSI N14.5-1997 is 10^{-3} ref-cm^3/sec. Further, ANSI N14.5-1997 states that in cases where the test sensitivity has been established and the Gas Pressure Drop test is used, the maximum permitted leak rate is:

$L \leq S/2$ Equation B-17, Reference 4

Therefore the maximum permitted leak rate for the preshipment leak test is 5 x 10^{-4} ref-cm^3/sec. Substituting this in Eqn. B-17 above, determine the required hold time, where:

V = 55 cm^3

$T_s = T_1 = T_2 = 298^oK$

$P_1 - P_2$ = pressure instrument sensitivity = 0.1 psig

$$5x10^{-4} = \frac{(55\,\text{cm}^3)(298^o\,K)}{3600(H\ hr)(1\,\text{atm})}\left(\frac{0.007\,\text{atm}}{298^o\,K}\right)$$

Solve for H:

H = 0.214 hr = 12.8 min.

For conservatism, the test will be conducted for 15 minutes.

4.5 Periodic Verification Leak Rate Determination Using R-12 Test Gas

This section contains calculations to determine the periodic verification test measurement that is equivalent to the maximum permissible leak rate as determined using ANSI N14.5-1997 (Reference 4).

The purpose of this calculation is to determine the allowable leak rate using the R-12 halogen gas that may be used to perform the annual verification leak tests on the 10-160B cask.

4.5.1 Introduction

The text of this document is prepared using Mathcad, Version 6.0, software. Most conventions used in the text are the same as normal practice. A benefit of the Mathcad code is that is automatically carries all units with the variables used in the calculations. The code also allows output of variables in any form of the fundamental units (length, mass, time, etc.), allowing for automatic conversions between unit systems without the need for conversion factors. All Mathcad calculations in this Section 4.5 have been verified by hand calculations.

This calculation uses formulas presented in ANSI N14.5 - 1997.

4.5.2 Detector Sensitivity Calculation – Test Conditions

This section determines the sensitivity necessary for a leak test performed with R-12 halogen gas. This test is performed using a halogen leak detector. A leak standard, traceable to NIST, is used to calibrate the leak detector to detect the maximum allowable test leak rates specified in Figure 4.3. The test is performed as follows: The annulus between the o-ring seals of the 10-160B primary and secondary lids will be evacuated to a minimum vacuum of 20”Hg, and then be pressurized to a minimum pressure of 25 psig with R-12 halogen gas. In section 4.2.1, it was determined that the maximum possible diameter hole in the cask O-ring (D_{max}) that would permit the standard leak rate ($L_{std} = 3.25 \times 10^{-6}$) is:

The maximum possible diameter of hole in the O-ring is:

$D_{max} := 3.74 \cdot 10^{-4} \cdot cm$ From Section 4.2.1

$$L_{std}(D) = (F_c(D) + F_m(D) \bullet (P_u - P_d) \bullet \frac{P_a}{P_d}$$ Eqn. B5 – ANSI N14.5 - 1997

Determine the equivalent air/R12 mixture (L_{mix}) that would leak from D_{max} during a leak test. Assume the O-ring void is first evacuated to 20"Hg vacuum (9.92"Hg abs) and then pressurized to 25 psig (2.7 atm) with an air/R12 mixture.

$P_{mix} := 2.7 \cdot atm$

$P_{air} := 9.92 \cdot in_Hg$

$P_{air} = 0.33 atm$

$P_{R12} := P_{mix} - P_{air}$

$P_{R12} = 2.37 atm$ $P_d := 1.0 \cdot atm$

$P_a := \frac{P_{mix} + P_{air}}{2}$ $\Rightarrow$ $P_a = 1.85 atm$

$M_{R12} := 121 \cdot \frac{gm}{mole}$ ANSI N14.5 – 1997

$\mu_{R12} := 0.0124 \cdot cP$ ANSI N14.5 – 1997

$$M_{mix} := \frac{M_{R12} \cdot P_{R12} + M_{air} \cdot P_{air}}{P_{mix}}$$ Eqn. B7 - ANSI N14.5

$\Rightarrow$ $M_{mix} = 109.7 \frac{gm}{mole}$

$$\mu_{mix} := \frac{\mu_{air} \cdot P_{air} + \mu_{R12} \cdot P_{R12}}{P_{mix}}$$ Eqn. B8 – ANSI N14.5 - 1997

$\Rightarrow$ $\mu_{mix} = 0.0131 cP$

Determine L_{mix} as a function of temperature. Assume the viscosities of air and R12 do not change significantly over the range of temperatures evaluated:

$T := 273 \cdot K, 278 \cdot K .. 318 \cdot K$ Temperature range for test: 32°F to 113°F

$$F_c := \frac{2.49 \cdot 10^6 \cdot D_{max}^{\ 4} \cdot cP \cdot std}{a \cdot \mu_{mix} \cdot sec \cdot atm}$$

then,

$$F_c = 6.175 \times 10^{-6} \frac{cm^3}{sec \cdot atm}$$

$$F_m(T) := \frac{3.81 \cdot 10^3 \cdot D_{max}^{\ 3} \cdot \sqrt{\frac{T}{M_{mix}}} \cdot cm \cdot gm^{0.5}}{a \cdot P_a \cdot K^{0.5} \cdot mole^{0.5} \cdot sec}$$

$$L_{mix}(T) := \left(F_c + F_m(T)\right) \cdot \left(P_{mix} - P_{air}\right) \cdot \frac{P_a}{P_{mix}}$$

$$T_F(T) := \left[(T \cdot F - 273 \cdot K) \cdot \frac{9}{5 \cdot K} + 32 \right]$$

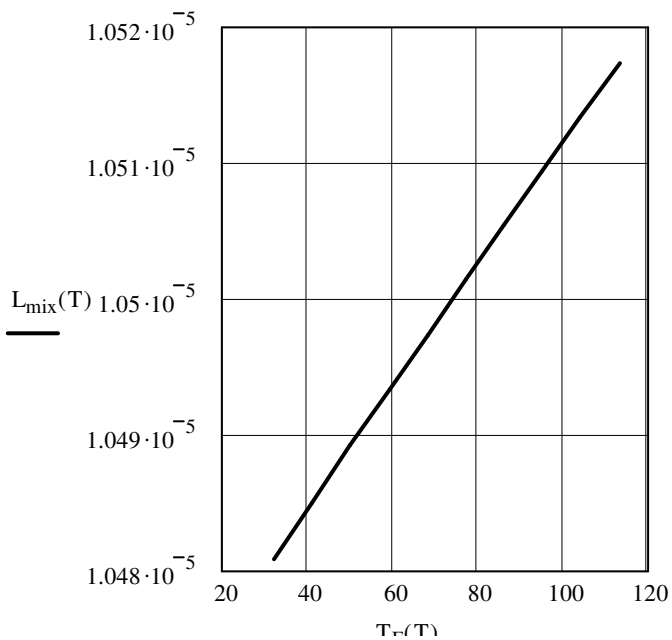

Fig.4.1 - Allowable R-12 Gas/Air Mixture Test Leakage, cm^3/sec, versus test temperature, deg.F

The R-12 component of this leak rate can be determined by multiplying the leak rate of the mixture by the ratio of the R-12 partial pressure to the total pressure of the mix, as follows.

$$L_{R12}(T) := L_{mix}(T) \cdot \frac{P_{R12}}{P_{mix}}$$

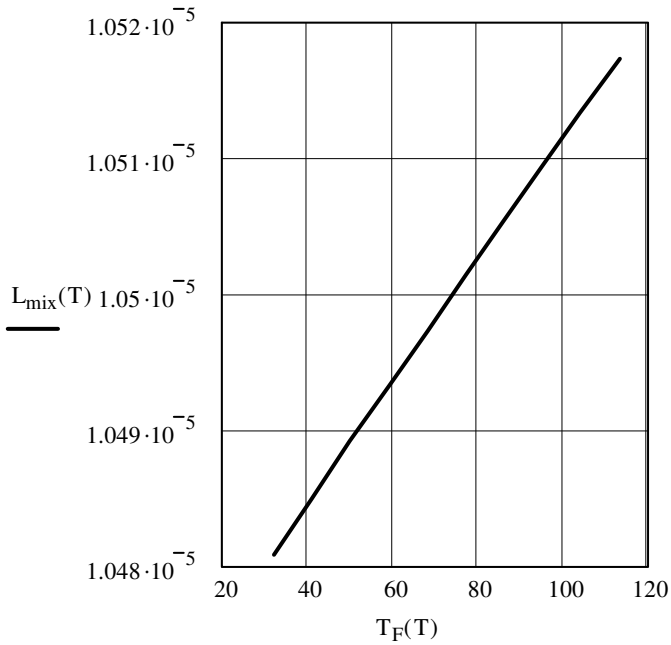

Fig.4.2 - Allowable R-12 test leakage, cm^3/sec versus test temperature, deg.F

Determine the equivalent mass flow rate for L_{R12} in oz/yr:

$$N(T) := \frac{P_{R12} \cdot V}{R_o \cdot T}$$ Ideal Gas Law

where,

$$R_o := \frac{82.05\,cm^3 \cdot atm}{mole \cdot K}$$

This data can then be used to convert the volumetric leak rate for R-12 calculated above to a mass leak rate. By dividing N by V, the number of moles per unit volume can be multiplied by the molecular weight of the gas and the maximum allowable volumetric leak rate to determine the maximum allowable mass leak rate, as a function of test temperature as shown in the graph below. The conversion from grams per second to ounces per year is also shown below.

$$L(T) := L_{R12}(T) \cdot \frac{N(T)}{V} \cdot M_{R12} \cdot \frac{yr}{oz}$$

$$\frac{gm}{sec} = 1.113 \times 10^6 \frac{oz}{yr}$$ Conversion of gm/sec to oz/yr

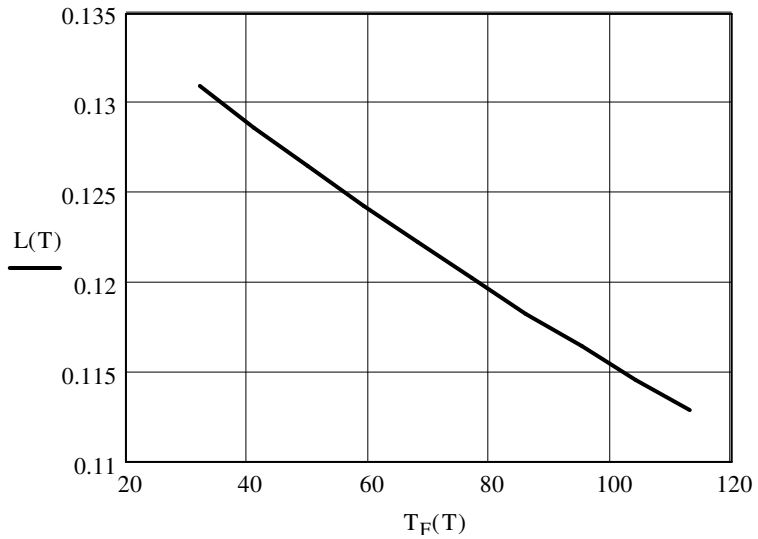

Fig.4.3 - Allowable R-12 test leakage, oz/yr, versus test temperature, deg.F

The graph above can be used to determine the allowable leak rate based on the temperature at the time of the test. According to ANSI N14.5 methodology, the maximum allowable leak rate must be divided by 2 to determine the minimum sensitivity for the test. A graph of the required sensitivity in oz/yr is presented below:

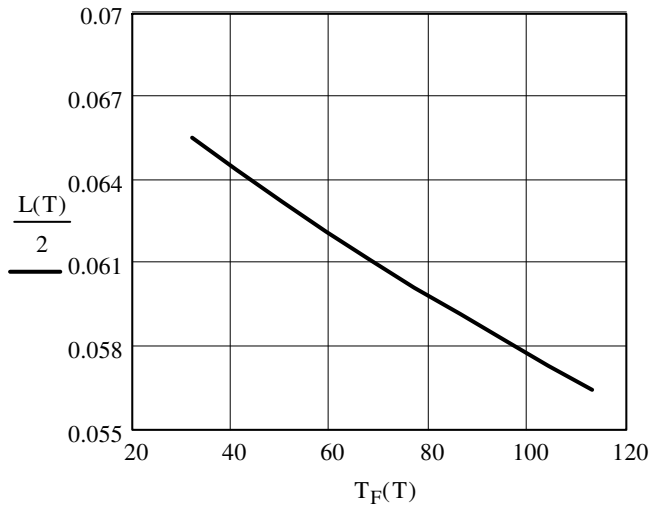

Fig.4.4 - Allowable R-12 test leakage sensitivity, oz/yr, versus test temperature, deg.F

The values presented in Figure 4.4 should be used to determine the sensitivity to calibrate the leak detector prior to the test.

4.6 Periodic Verification Leak Rate Determination Using Helium Test Gas

This section contains calculations to determine the periodic verification test measurement that is equivalent to the maximum permissible leak rate as determined using ANSI N14.5-1997 (Reference 4).

4.6.1 Introduction

The purpose of this calculation is to determine the allowable leak rate using the Helium gas that may be used to perform the annual verification leak tests on the 10-160B cask.

The text of this document is prepared using Mathcad, Version 6.0, software. Most conventions used in the text are the same as normal practice. A benefit of the Mathcad code is that it automatically carries all units with the variables used in the calculations. The code also allows output of variables in any form of the fundamental units (length, mass, time, etc.), allowing for automatic conversions between unit systems without the need for conversion factors. All Mathcad calculations in this Section 4.6 have been verified by hand calculations.

4.6.2 Detector Sensitivity – Test Conditions

In Section 4.2.1, it was determined that the maximum possible diameter hole in the cask O-ring (D_{max}) that would permit the standard leak rate (L_{std} = 3.25x10^{-6} ref- cm^3/sec) is:

$D_{max} := 3.74 \cdot 10^{-4} \cdot cm$

Next, determine the equivalent air/He mixture (L_{mix}) that would leak from D_{max} during a leak test. Assume the O-ring void is pressurized to 25 psig (2.7 atm) with an air/He mixture.

$P_{mix} := 2.7 \cdot atm$

$P_{air} := 1.0 \cdot atm$

$P_{He} := 1.7 \cdot atm$

$$P_a := \frac{P_{mix} + P_{air}}{2}$$

$P_a = 1.85 \cdot atm$

$M_{He} := 4.0 \cdot \frac{gm}{mole}$ ANSI N14.5 - 1997

$\mu_{He} := 0.0198 \cdot cP$ ANSI N14.5 - 1997

$$M_{mix} := \frac{M_{He} \cdot P_{He} + M_{air} \cdot P_{air}}{P_{mix}}$$ Eqn. B7 - ANSI N14.5

$$\Rightarrow \quad M_{mix} = 13.26 \cdot \frac{gm}{mole}$$

$$\mu_{mix} := \frac{\mu_{air} \cdot P_{air} + \mu_{He} \cdot P_{He}}{P_{mix}}$$ Eqn. B8 - ANSI N14.5

$$\Rightarrow \quad \mu_{mix} = 0.019 \cdot cP$$

Determine L_{mix} as a function of temperature. Assume the viscosities of air and Helium do not change significantly over the range of temperatures evaluated:

$T := 273 \cdot K, 278 \cdot K .. 318 \cdot K$ Temperature range for test: 32°F to approx. 113°F

$$F_c := \frac{2.49 \cdot 10^{6} \cdot D_{max}^{4} \cdot cP \cdot std}{a \cdot \mu_{mix} \cdot sec \cdot atm}$$

$$\Rightarrow \quad F_c = 4.203 \cdot 10^{-6} \cdot \frac{cm^{3}}{sec \cdot atm}$$

$$F_m(T) := \frac{3.81 \cdot 10^{3} \cdot D_{max}^{3} \cdot \sqrt{\frac{T}{M_{mix}}} \cdot cm \cdot gm^{0.5}}{a \cdot P_a \cdot K^{0.5} \cdot mole^{0.5} \cdot sec}$$

$$L_{mix}(T) := \left(F_c + F_m(T)\right) \cdot \left(P_{mix} - P_{air}\right) \cdot \frac{P_a}{P_{mix}}$$

$$T_F(T) := \left[(T \cdot F - 273 \cdot K) \cdot \frac{9}{5 \cdot K} + 32 \right]$$

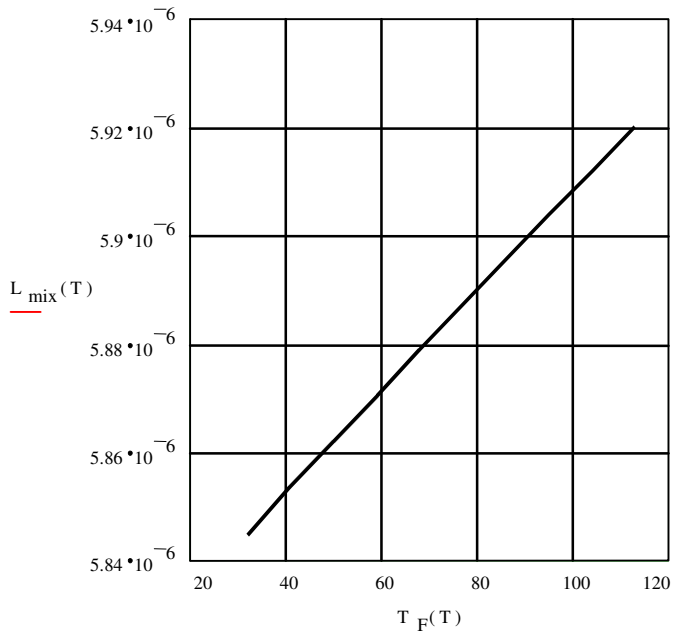

Fig.4.5 - Allowable He/Air Mixture Test Leakage, cm^3/sec, versus test temperature, deg.F

The Helium component of this leak rate can be determined by multiplying the leak rate of the mixture by the ratio of the Helium partial pressure to the total pressure of the mix, as follows.

$$L_{He}(T) := L_{mi}(T) \cdot \frac{P_{He}}{P_{mi}}$$

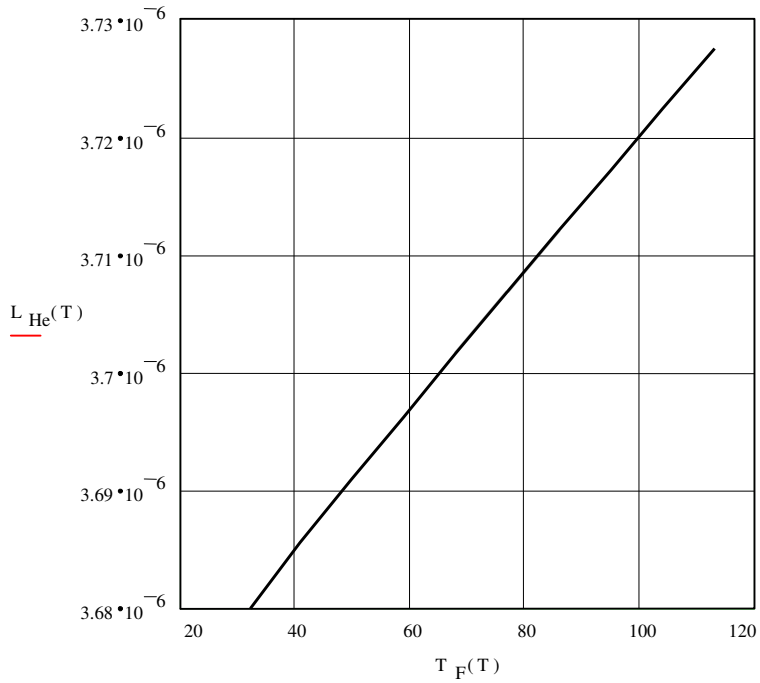

Fig.4.6 - Allowable Helium test leakage, cm^3/sec versus test temperature, deg.F

Determine the equivalent mass flow rate for L_{He} in oz/yr:

$$N(T) := \frac{P_{He} \cdot V}{R_o \cdot T}$$ Ideal Gas Law

where,

$$R_o := 82.05 \frac{cm^3 \cdot atm}{mole \cdot K}$$

This data can then be used to convert the volumetric leak rate for Helium calculated above to a mass leak rate. By dividing N by V, the number of moles per unit volume can be multiplied by the molecular weight of the gas and the maximum allowable volumetric leak rate to determine the maximum allowable mass leak rate, as a function of test temperature as shown in the graph below. The conversion from grams per second to ounces per year is also shown below.

$$L(T) := L_{He}(T) \cdot \frac{N(T)}{V} \cdot M_{He} \cdot \frac{yr}{oz}$$

$$\frac{gm}{sec} = 1.113 \cdot 10^6 \cdot \frac{oz}{yr}$$ Conversion of gm/sec to oz/yr

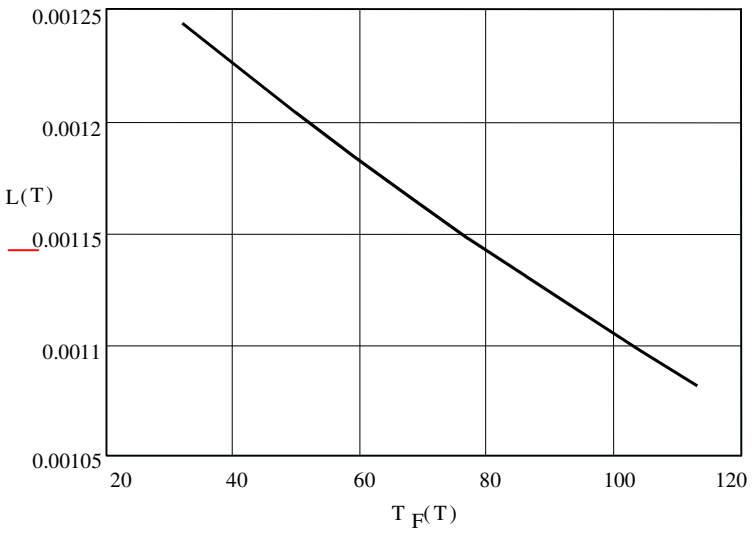

Fig.4.7 - Allowable helium test leakage, oz/yr, versus test temperature, deg.F

The graph above can be used to determine the allowable leak rate based on the temperature at the time of the test. According to ANSI N14.5 methodology, the maximum allowable leak rate must be divided by 2 to determine the minimum sensitivity for the test. A graph of the required sensitivity in oz/yr is presented below:

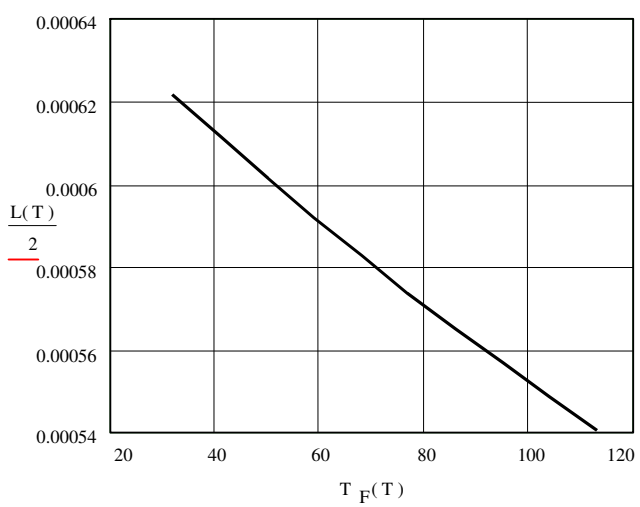

Fig.4.8 - Allowable helium test leakage sensitivity, oz/yr, versus test temperature, deg.F

The values presented in Figure 4.8 should be used to determine the sensitivity to calibrate the leak detector prior to the test.

4.7 Periodic Verification Leak Rate Determination Using R-134A Test Gas

This section contains calculations to determine the periodic verification test measurement that is equivalent to the maximum permissible leak rate as determined using ANSI N14.5-1997 (Reference 8).

4.7.1 Introduction

The purpose of this calculation is to determine the allowable leak rate using the R-134a halogen gas that will be used as an alternative to perform the annual verification leak tests on the 10-160B cask. This halogen gas is now in widespread use as a replacement gas for R-12 in many industrial applications. Properties for R134a are included in Appendix 4.1.

The text of this document is prepared using Mathcad, Version 6.0, software. Most conventions used in the text are the same as normal practice. A benefit of the Mathcad code is that it automatically carries all units with the variables used in the calculations. The code also allows output of variables in any form of the fundamental units (length, mass, time, etc.), allowing for automatic conversions between unit systems without the need for conversion factors. All Mathcad calculations in this Section 4.7 have been verified by hand calculations.

4.7.2 Detector Sensitivity Calculation - Test Conditions

This section determines the sensitivity necessary for a leak test performed with R-134a halogen gas. This test is performed using a halogen leak detector. A leak standard, traceable to NIST, is used to calibrate the leak detector to detect the maximum allowable test leak rates specified in Figure 4.11. The test is performed as follows: The annulus between the o-ring seals of the 10-160B primary and secondary lids will be evacuated to a minimum vacuum of 20”Hg, and then be pressurized to a minimum pressure of 25 psig with R-134a halogen gas. In section 4.2.1, it was determined that the maximum possible diameter hole in the cask O-ring (D_{max}) that would permit the standard leak rate ($L_{std} = 3.25 \times 10^{-6}$) is:

$D_{max} := 3.74 \cdot 10^{-4} \cdot cm$

Next, determine the equivalent air/R134a mixture (L_{mix}) that would leak from D_{max} during a leak test. Assume the O-ring void is first evacuated to 20"Hg vacuum (9.92"Hg absolute) and then pressurized to 25 psig (2.7 atm) with an air/R134a mixture.

$P_{mix} := 2.7 \cdot atm$

$P_{air} := 9.92 \cdot in_Hg$

$P_{air} = 0.33 atm$

$P_{R134a} := P_{mix} - P_{air}$

$P_{R134a} = 2.37atm$ $P_d := 1.0 \cdot atm$

$$P_a := \frac{P_{mix} + P_{air}}{2}$$

$P_a = 1.85atm$

The properties of R134a are given in the attached literature:

$M_{R134a} := 102 \cdot \frac{gm}{mole}$

$\mu_{R134a} := 0.012 \cdot cP$

$$M_{mix} := \frac{M_{R134a} \cdot P_{R134a} + M_{air} \cdot P_{air}}{P_{mix}}$$ Eqn. B7 - ANSI N14.5

$\Rightarrow$ $M_{mix} = 93.04 \frac{gm}{mole}$

$$\mu_{mix} := \frac{\mu_{air} \cdot P_{air} + \mu_{R134a} \cdot P_{R134a}}{P_{mix}}$$ Eqn. B8 - ANSI N14.5

$\Rightarrow$ $\mu_{mix} = 0.013cP$

Determine L_{mix} as a function of temperature. Assume the viscosities of air and R134a do not change significantly over the range of temperatures evaluated:

$T := 273 \cdot K, 278 \cdot K .. 318 \cdot K$ Temperature range for test: 32°F to 113°F

$$F_c := \frac{2.49 \cdot 10^6 \cdot D_{max}^4 \cdot cP \cdot ref}{a \cdot \mu_{mix} \cdot sec \cdot atm}$$

$\Rightarrow$ $F_c = 6.344 \times 10^{-6} \frac{cm^3}{sec \cdot atm}$

$$F_m(T) := \frac{3.81 \cdot 10^3 \cdot D_{max}^3 \cdot \sqrt{\frac{T}{M_{mix}}} \cdot cm \cdot gm^{0.5}}{a \cdot P_a \cdot K^{0.5} \cdot mole^{0.5} \cdot sec}$$

$$L_{mix}(T) := \left(F_c + F_m(T)\right) \cdot \left(P_{mix} - P_{air}\right) \cdot \frac{P_a}{P_{mix}}$$

$$T_F(T) := \left[(T \cdot F - 273 \cdot K) \cdot \frac{9}{5 \cdot K} + 32 \right]$$

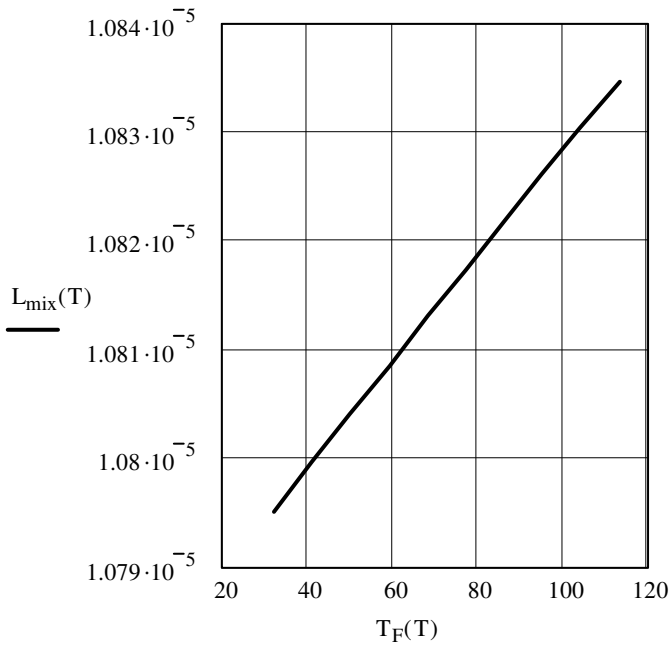

Fig.4.9 - Allowable R134a/Air Mixture Test Leakage, cm^3/sec, versus test temperature, deg.F

The R-134a component of this leak rate can be determined by multiplying the leak rate of the mixture by the ratio of the R-134a partial pressure to the total pressure of the mix, as follows.

$$L_{R134a}(T) := L_{mix}(T) \cdot \frac{P_{R134a}}{P_{mix}}$$

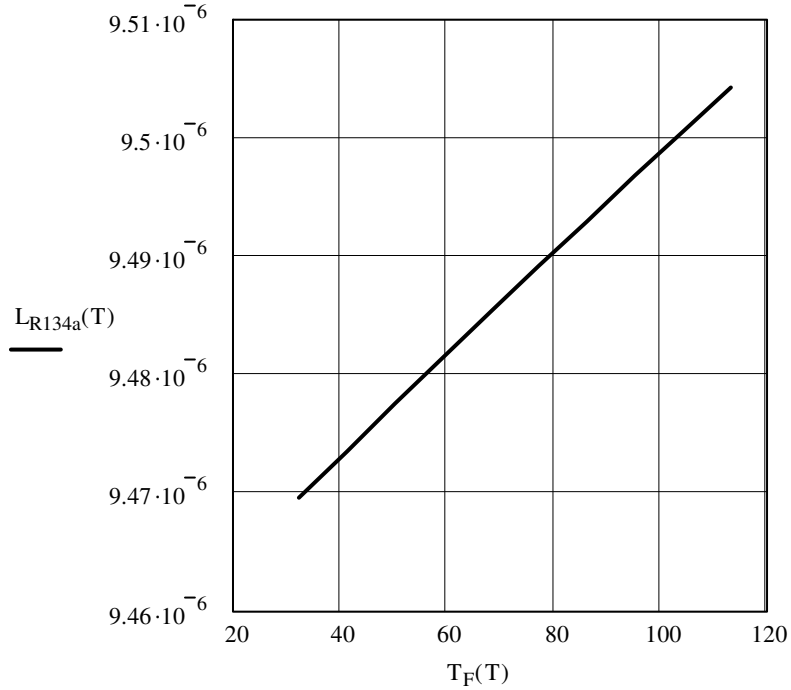

Fig.4.10 - Allowable R-134a test leakage, cm^3/sec versus test temperature, deg.F

Determine the equivalent mass flow rate for L_{R134a} in oz/yr, the measurement used by the detector:

$$N(T) := \frac{P_{R134a} \cdot V}{R_o \cdot T}$$ Ideal Gas Law

where,

$$R_o := \frac{82.05\,cm^3 \cdot atm}{mole \cdot K}$$ Universal Gas Constant

This data can then be used to convert the volumetric leak rate for R-134a calculated above to a mass leak rate. By dividing N by V, the number of moles per unit volume can be multiplied by the molecular weight of the gas and the maximum allowable volumetric leak rate to determine the maximum allowable mass leak rate, as a function of test temperature as shown in the graph below. The conversion from grams per second to ounces per year is also shown below.

$$L(T) := L_{R134a}(T) \cdot \frac{N(T)}{V} \cdot M_{R134a} \cdot \frac{yr}{oz}$$

$$\frac{gm}{sec} = 1.113 \times 10^6 \frac{oz}{yr}$$ Conversion of gm/sec to oz/yr

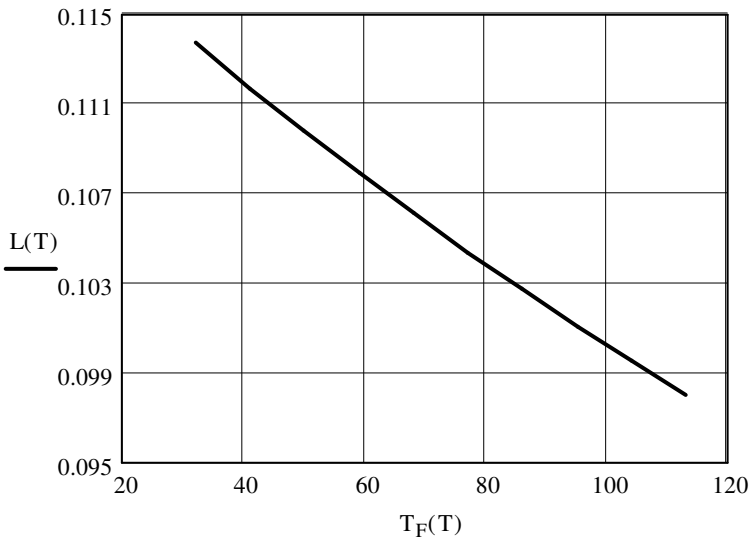

Fig.4.11 - Allowable R134a test leakage, oz/yr, versus test temperature, deg.F

The graph above can be used to determine the allowable leak rate based on the temperature at the time of the test. According to ANSI N14.5 methodology, the maximum allowable leak rate must be divided by 2 to determine the minimum sensitivity for the test. A graph of the required sensitivity in oz/yr is presented below:

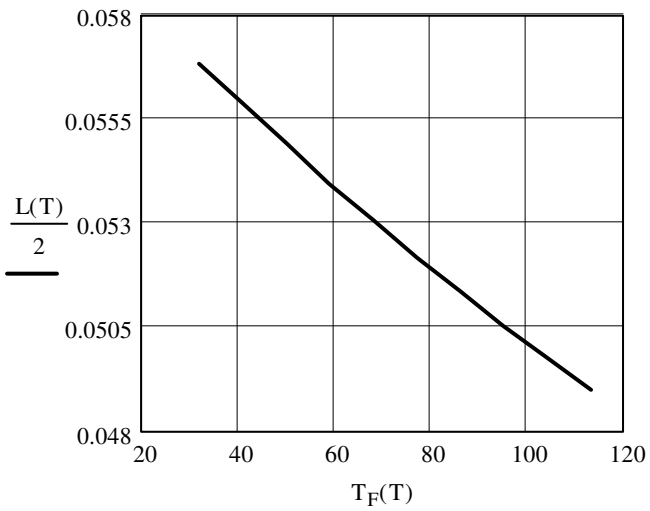

Fig.4.12 - Allowable R134a test leakage sensitivity, oz/yr, versus test temperature, deg.F

The values presented in Figure 4.12 should be used to determine the sensitivity to calibrate the leak detector prior to the test.

4.8 Combustible Gas Generation Safety Assurance

Assurance of safe shipment of vessels which may generate combustible gas is based on meeting the following criteria over the shipment period.

i) The quantity of hydrogen generated must be limited to a molar quantity that would be no more than 5% by volume at STP (or equivalent limits for other inflammable gases) of the secondary container gas void (i.e., no more than 0.063 gram moles/cubic foot, or

ii) The secondary container and the cask cavity (if required) must be inerted with a diluent to assure the oxygen, including that radiolytically generated, shall be limited to 5% by volume in those portions of the package which could have hydrogen greater than 5%.

Criterion (i) essentially stipulates that the quantity of hydrogen shall be limited to 5% of the secondary container gas void at STP. This 5% hydrogen gas volume at standard conditions is equivalent to a hydrogen partial pressure of 0.735 psi or 0.063 gram moles/cubic foot. By actual experiment (Ref. 6), the produce an approximate 2.3 psi incremental pressure increase above a nominally atmospheric initial pressure. This is because 0.063 gram moles of hydrogen per cubic foot provides such a small source that the peak pressure rise resulting from ignition of this source is slight. (The pressure rise is independent of the total volume under test, i.e. the 0063 gram moles per cubic foot relationship to a 2.3 psi pressure rise is valid for one or many cubic feet of specimen volume). Methodology for demonstrating compliance with the 5% hydrogen concentration limit for TRU waste is described in Appendix 4.10.2, Transuranic (TRU) Waste Compliance Methodology for Hydrogen Gas Generation. This incremental pressure rise is an inconsequential load on the cask structure.

(Ref. 7), Criteria (ii) is invoked to ensure that when a secondary container's hydrogen concentration potentially exceeds 5% volume, release of that hydrogen to the then existing total volume (secondary container void plus cask void) will not result in a total mixture of greater than 5% volume hydrogen in a greater than 5% oxygen atmosphere. Maintaining the oxygen concentration lower than five (5) volume % assures a nonflammable mixture.

4.9 Periodic Verification Leak Rate Determination for Leaktight Status

4.9.1 Introduction

The purpose of this section is to describe the method for performing a periodic leak test to demonstrate meeting the leaktight criterion per ANSI N14.5-1997.

4.9.2 Test Conditions

The test is performed with a mass spectrometer leak detector. The test is conducted on the 10-160B by evacuating the cask cavity to at least 90% vacuum then pressurizing the cask cavity with helium (+1 psig, -0 psig). The annulus between the o-rings is evacuated until the vacuum is sufficient to operate the helium mass spectrometer leak detector and the helium concentration in the annulus is monitored. The acceptance criterion is 1.0×10^{-7} atm-cm^3/sec of air (leaktight). The detector sensitivity must be less than or equal to 5.0×10^{-8} atm-cm^3/sec. Similar tests are performed on the vent and drain ports, if so equipped.

4.11 References

1. Hansen Couplings, The Hansen Manufacturing Company, Cleveland, Ohio.

2. Mark's Standard Handbook for Mechanical Engineers, Theodore Baumeister, et. al., Eighth Edition, McGraw-Hill Book Company, New York, 1979.

3. Basic Engineering Thermodynamics, M. W. Zemansky and H. C. Van Ness, McGraw-Hill Book Company, New York, 1966.

4. American National Standard for Leakage Tests on Packages for Shipment of Radioactive Materials, American National Standards Institute, Inc., New York, ANSI N14.5-1997, 1998.

5. CRC Handbook of Chemistry and Physics, Robert C. Weast and Melvin J. Astle, eds., 62nd Edition, CRC Press, Inc., Boca Ration, Florida, 1981.

6. Flame and Detonation Initiation Area Propagation in Various Hydrogen - Air Mixtures With and Without Water Spray, L. W. Carlson, et. al., Atomic International Division of Rockwell International, Canoga Park, California, May 11, 1973.

7. Combustion, Flames and Explosions of Gases, B. Lewis and G. von Elbe, Academic Press, New York, 1961, Second Edition, Appendix B.

8. Nondestructive Testing Handbook, 2nd Ed., Vol. One, American National Standards Institute, Inc., New York,1982.

4.10 Appendices

Appendix 4.10.1

Properties of R-134a

Appendix 4.10.2

Transuranic (TRU) Waste Compliance
Methodology for Hydrogen Gas Generation

P134a

DUPONT

Suva®
refrigerants

DuPont HFC-134a

Properties, Uses, Storage, and Handling

Suva® 134a refrigerant
Suva® 134a (Auto) refrigerant
Formacel® Z-4 foam expansion agent
Dymel® 134a aerosol propellant

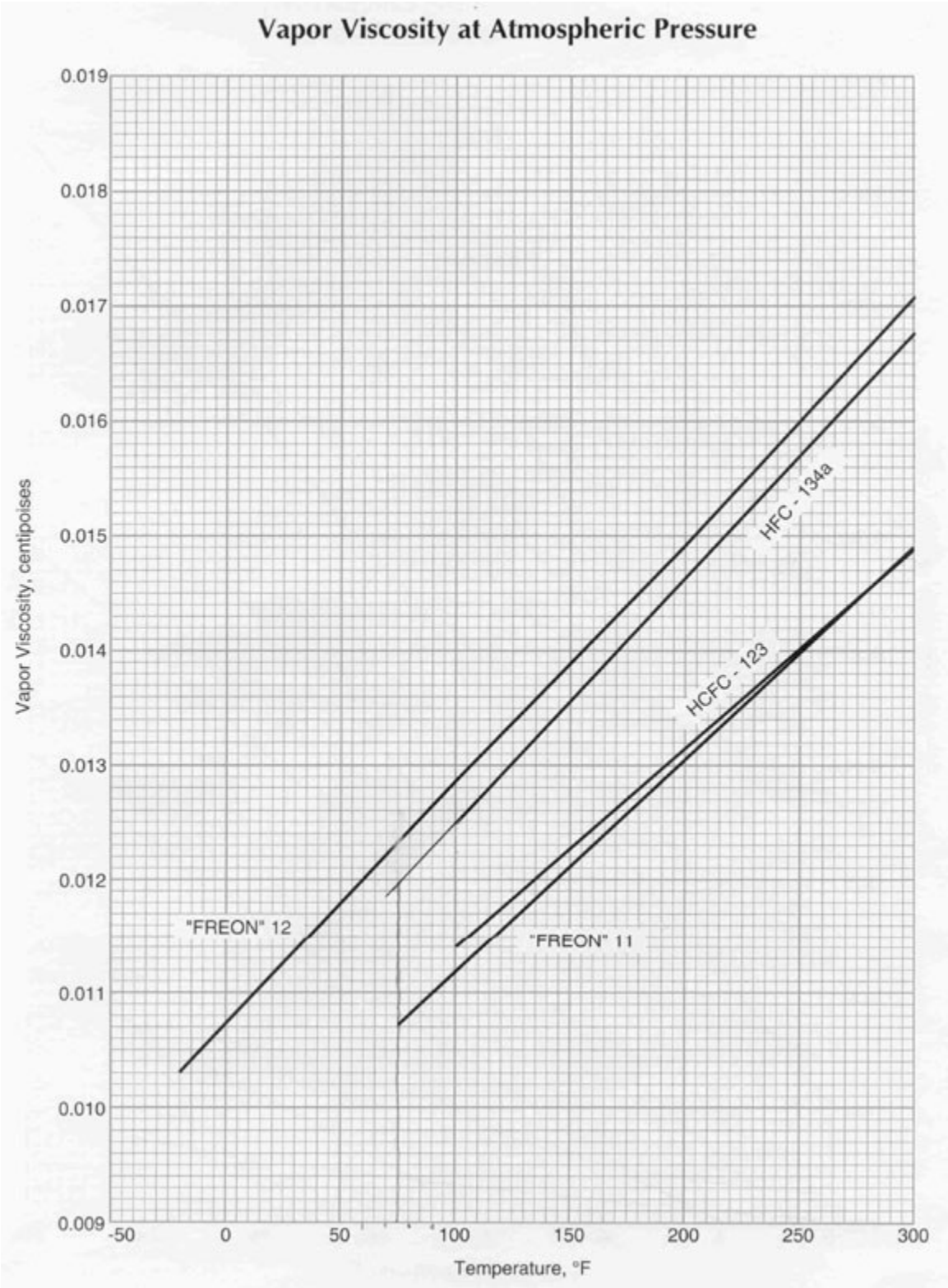
Vapor Viscosity at Atmospheric Pressure
Vapor Viscosity, centipoises
0.019
0.018
0.017
0.016
0.015
0.014
0.013
0.012
0.011
0.010
0.009
-50
0
50
100
150
200
250
300
Temperature, °F
HFC - 134a
HCFC - 123
"FREON" 12
"FREON" 11

DU PONT SUVA REFRIGERANTS

SUVA®

REFRIGERANTS ART - 1

PRODUCT INFORMATION

Transport Properties of SUVA® Refrigerants:

SUVA® COLD - MP (HFC - 134a)
SUVA® TRANS A/C (HFC - 134a)
SUVA® CENTRI - LP (HCFC - 123)

Viscosity
Thermal Conductivity
and
Heat Capacity
for the
Liquid and Vapor

DU PONT

Table 2
Physical Properties of HFC-134a

Physical Properties	Units	HFC-134a
Chemical Name	—	Ethane, 1,1,1,2-Tetrafluoro
Chemical Formula	—	CH_2FCF_3
Molecular Weight	—	102.03
Boiling Point at 1 atm (101.3 kPa or 1.013 bar)	°C	−26.1
	°F	−14.9
Freezing Point	°C	−103.3
	°F	−153.9
Critical Temperature	°C	101.1
	°F	213.9
Critical Pressure	kPa	4060
	lb/in.² abs	588.9
Critical Volume	m³/kg	1.94×10^{-3}
	ft³/lb	0.031
Critical Density	kg/m³	515.3
	lb/ft³	32.17
Density (Liquid) at 25°C (77°F)	kg/m³	1206
	lb/ft³	75.28
Density (Saturated Vapor) at Boiling Point	kg/m³	5.25
	lb/ft³	0.328
Heat Capacity (Liquid) at 25°C (77°F)	kJ/kg·K	1.44
	or Btu/(lb) (°F)	0.339
Heat Capacity (Vapor at Constant Pressure) at 25°C (77°F) and 1 atm (101.3 kPa or 1.013 bar)	kJ/kg·K	0.852
	or Btu/(lb) (°F)	0.204
Vapor Pressure at 25°C (77°F)	kPa	666.1
	bar	6.661
	psia	96.61
Heat of Vaporization at Boiling Point	kJ/kg	217.2
	Btu/lb	93.4
Thermal Conductivity at 25°C (77°F) Liquid	W/m·K	0.0824
	Btu/hr·ft°F	0.0478
Vapor at 1 atm (101.3 kPa or 1.013 bar)	W/m·K	0.0145
	Btu/hr·ft°F	0.00836
Viscosity at 25°C (77°F) Liquid	mPa·S (cP)	0.202
Vapor at 1 atm (101.3 kPa or 1.013 bar)	mPa·S (cP)	0.012
Solubility of HFC-134a in Water at 25°C (77°F) and 1 atm (101.3 kPa or 1.013 bar)	wt %	0.15
Solubility of Water in HFC-134a at 25°C (77°F)	wt %	0.11
Flammability Limits in Air at 1 atm (101.3 kPa or 1.013 bar)	vol %	None
Autoignition Temperature	°C	770
	°F	1418
Ozone Depletion Potential	—	0
Halocarbon Global Warming Potential (HGWP) (For CFC-11, HGWP = 1)	—	0.28
Global Warming Potential (GWP) (100 yr. ITH. For CO_2, GWP = 1)	—	1200
TSCA Inventory Status	—	Reported/Included
Toxicity AEL[a] (8- and 12-hr TWA)	ppm (v/v)	1000

[a]AEL (Acceptable Exposure Limit) is an airborne inhalation exposure limit established by DuPont that specifies time-weighted average concentrations to which nearly all workers may be repeatedly exposed without adverse effects.

Note: kPa is absolute pressure.

Appendix 4.10.2

TRU Waste Payload Control

1.0 INTRODUCTION

The purpose of this appendix is to identify the requirements for the control of remote handled transuranic (RH-TRU) and contact-handled transuranic (CH-TRU) waste, as defined by the U.S. Department of Energy (DOE) (Reference 12.1), as payload for transport in the 10-160B cask.

The payload parameters that are controlled in order to ensure safe transport of the TRU waste in the 10-160B cask are as follows:

- Restrictions on the physical and chemical form of CH-TRU and RH-TRU waste.
- Restrictions on payload materials to ensure chemical compatibility among all constituents in a particular 10-160B cask (including the parts of the cask that might be affected by the payload).
- Restrictions on the maximum pressure in the 10-160B cask during the transport period. (As a conservative analysis, the maximum pressure calculations are performed for a period of one year. Attachment C discusses the transport period.)
- Restrictions on the amount of potentially flammable gases that might be present or generated in the payload during the transport period.
- Restrictions on the layers of confinement for RH-TRU and CH-TRU waste materials in the waste containers packaged in the cask.
- Restrictions on the fissile material content for the cask.
- Restrictions on the hydrogen generation rates or the decay heat for the waste containers packaged in the cask.
- Restrictions on the weight for the loaded cask.

The methods for determining or measuring each restricted parameter, the factors influencing the parameter values, and the methods used by each shipping site for demonstrating compliance, through Revision 22 of the SAR, were provided in the site-specific sub tier appendices (Appendices 4.10.2.1 through 4.10.2.5). A payload container previously demonstrated to be in compliance with this appendix and subsequently shipped to another site remains acceptable for shipping provided the payload container has not been opened.

As of Revision 0 of the Consolidated SAR, site-specific compliance methodologies for additional 10-160B cask TRU waste payloads are approved by the 10-160B TRU Payload Engineer provided that compliance with the transportation requirements of this appendix can be demonstrated. The 10-160B TRU Payload Engineer does not have the authority to change the transportation requirements for the 10-160B cask as specified in this appendix without approval from the U.S. Nuclear Regulatory Commission. The 10-160B TRU Payload Engineer may approve only contents meeting the requirements of this appendix. The 10-160B TRU Payload Engineer will perform the site-specific waste evaluation against the 10-160B payload parameters of this appendix and document the assessment in the "10-160B TRU Waste Payload Assessment" document. The documentation of the site-specific waste evaluations will be

modeled on the previously-approved site-specific compliance methodologies documented in Appendices 4.10.2.1 through 4.10.2.5. The 10-160B user shall retain copies of the payload evaluation and the Payload Engineer approval.

This appendix also includes the following as attachments:

- Description of the use of dose-dependent G values for TRU wastes (Attachment A)
- Chemical compatibility analysis for the TRU waste content codes (Attachment B).
- Shipping period for TRU waste in the 10-160B cask (Attachment C)

2.0 PURPOSE

2.1 Payload Parameters

The purpose of this appendix is to describe the payload requirements for RH-TRU and CH-TRU waste for transport in the 10-160B cask.

Section 2.2 describes some typical methods of compliance available to show compliance with the individual payload parameter requirements. Section 3.0 describes the relationship between payload parameters and the classification of RH-TRU and CH-TRU materials into 10-160B cask payload content codes. Sections 4.0 through 11.0 discuss each payload parameter requirements for the 10-160B cask.

The payload parameters addressed in this document include:

- Physical form
- Chemical form and chemical properties
- Chemical compatibility
- Gas distribution and pressure buildup
- Payload container and contents configuration
- Isotopic characterization and fissile content
- Decay heat and hydrogen generation rates
- Weight.

2.2 Methods of Compliance

This section describes some typical methods that may be used to determine compliance with each payload parameter requirement and the controls imposed on the use of each method. Each shipping site shall select and implement a single compliance method, or a combination of methods, to ensure that the payload is compliant with each requirement and is qualified for shipment. These methods shall be documented in the site-specific sub tier appendices associated with this appendix or in the compliance methodologies approved in the 10-160B TRU Waste Payload Assessment.

A summary of typical methods of compliance that may be used for the 10-160B cask payload control is provided in the following sections.

2.2.1 Visual Examination

Visual examination at the time of waste generation may be used to qualify waste for transport. The operator(s) of a waste generating area shall visually examine the physical form of the waste according to

site/equipment-specific procedures and remove all prohibited waste forms prior to its placement in the payload container. Observation of the waste generation process by an independent operator may be used as an independent verification of the compliance of the waste prior to closure of the payload container.

2.2.2 Visual Inspection

Visual inspection may be used to evaluate compliance with specific restrictions (e.g., visual inspection of payload container type, number of filters, etc.).

2.2.3 Radiography

Radiography may be used as an independent verification to qualify waste for transport. Radiography may be used to nondestructively examine the physical form of the waste, and to verify the absence of prohibited waste forms, after the payload container is closed.

2.2.4 Process Knowledge (Records and Database Information)

Process knowledge (PK) (also referred to as acceptable knowledge for the purposes of this document) refers to applying knowledge of the waste in light of the materials or processes used to generate the waste. PK is detailed information on the waste obtained from existing published or documented waste analysis data or studies conducted on wastes generated by processes similar to that which generated the waste. PK may include information on the physical, chemical, and radiological properties of the materials associated with the waste generation process(es), the fate of those materials during and subsequent to the process, and associated administrative controls. PK commonly includes detailed information on the waste obtained from existing waste analysis data, review of waste generating process(es), or detailed information relative to the properties of the waste that are known due to site-specific or process-specific factors (e.g., material accountability and tracking systems or waste management databases may supply information on waste isotopic composition or quantity of radionuclides, among other waste attributes). PK sources may include information collected by one or more of the compliance methods described in Sections 2.2.1 through 2.2.7.

Information obtained from existing site records and/or databases or knowledge of process may be used as a basis for reporting the absence of prohibited waste forms within waste containers. PK may also be used to show compliance with the physical and chemical form requirements and the payload container and contents requirements.

2.2.5 Administrative and Procurement Controls

Site-specific administrative and procurement controls may be used to show that the payload container contents are monitored and controlled, and to demonstrate the absence of prohibited items within waste containers.

2.2.6 Sampling Programs

Sampling programs may be used as an independent verification of compliance.

2.2.7 Measurement

Direct measurement or evaluation based on analysis using the direct measurement may be used to qualify waste (e.g., direct measurement of the weight or analysis of assay data to determine decay heat).

3.0 TRU WASTE PAYLOAD FOR 10-160B CASK

RH-TRU and CH-TRU waste is classified into content codes, which give a description of the RH-TRU and CH-TRU waste material in terms of processes generating the waste, the packaging methods used in the waste container(s), and the generating site. Content codes for the RH-TRU and CH-TRU waste to be shipped from each site are provided in the site-specific sub tier appendices to this appendix or in the compliance methodologies approved by the 10-160B TRU Payload Engineer in the 10-160B TRU Waste Payload Assessment. Each content code provides a listing of all the payload parameters, their corresponding limits and restrictions, and the methods used by the site to meet these limits.

4.0 PHYSICAL FORM REQUIREMENTS

The physical form of waste comprising the 10-160B cask payload is restricted to solid or solidified materials in secondary containers. The total volume of residual liquid in a secondary container is restricted to less than 1% by volume. A secondary container is any container placed inside the primary container, the 10-160B cask. Secondary containers must be shored to prevent movement during accident conditions. Sharp or heavy objects in the waste shall be blocked, braced, or suitably packaged as necessary to provide puncture protection for the payload containers packaging these objects. Sealed containers greater than four liters in volume that do not have a known, measured, or calculated hydrogen release rate or resistance are prohibited.

5.0 CHEMICAL FORM AND CHEMICAL PROPERTIES

The chemical constituents allowed in a given content code determine the chemical properties of the waste. Specific requirements regarding the chemical form of the waste are as follows:

- Explosives, nonradioactive pyrophorics, compressed gases, and corrosives are prohibited.
- Pyrophoric radionuclides may be present only in residual amounts less than 1 weight percent.
- The total amount of potentially flammable volatile organic compounds (VOCs) present in the headspace of a secondary container is restricted to 500 parts per million (ppm).

6.0 CHEMICAL COMPATIBILITY

Each content code has an associated chemical list based on PK information. Chemical constituents in a payload container assigned to a given content code shall conform to these chemical lists. Chemicals or materials that are not listed are allowed in trace amounts (quantities less than one weight percent) in a payload container provided that the total quantity of trace chemicals or materials is restricted to less than five weight percent.

Chemical compatibility of the waste within itself and with the packaging shall ensure that chemical processes would not occur that might pose a threat to safe transport of the payload in the 10-160B Cask. The basis for evaluating the chemical compatibility shall be the U.S. Environmental Protection Agency (EPA) document, "A Method for Determining the Compatibility of Hazardous Wastes" (Reference 12.2). This method provides a systematic means of analyzing the chemical compatibility of specific combinations of chemical compounds and materials. Any incompatibilities between the payload and the packaging shall be evaluated separately if not covered by the EPA method.

As described in Attachment B to this appendix, the EPA method classifies individual chemical compounds, identified in the list of allowable chemicals and materials, into chemical groups and identifies

the potential adverse reactions resulting from incompatible combinations of the groups. Attachment B presents the methodology and results for the chemical compatibility analyses performed on the list of allowable chemicals and materials associated with the TRU waste content codes expected to be shipped in the 10-160B Cask.

Chemicals and materials included on the content code chemical lists (in concentrations greater than one weight percent) shall be a subset of the list of allowable materials identified in Table B-1 of Attachment B to this appendix to demonstrate compliance with the compatibility requirement. The results of the compatibility analyses show that these content codes can be transported without any incompatibilities.

7.0 GAS DISTRIBUTION AND PRESSURE BUILDUP

Gas distribution and pressure buildup during transport of TRU waste in the 10-160B cask payload are restricted to the following limits:

- The gases generated in the payload must be controlled to prevent the occurrence of potentially flammable concentrations of gases within the payload confinement layers and the void volume of the inner vessel (IV) cavity. Specifically, hydrogen concentrations within the payload confinement layers are limited to 5 percent by volume during the shipping period (see Attachment C).

- The gases generated in the payload and released into the IV cavity must be controlled to maintain the pressure within the IV cavity below the acceptable packaging design limit of 31.2 pounds per square inch gauge (psig).

The primary mechanism for gas generation during TRU waste transportation in the 10-160B cask is by radiolysis of the waste materials. Gas generation from other mechanisms such as chemical, thermal, or biological activity is expected to be insignificant for the TRU waste payload. As discussed in Section 6.0, the chemicals and materials in the TRU waste are compatible and inert, and the restrictions of the materials that can be present in each content code precludes the occurrence of chemical reactions that can produce excessive gas. Gas generation from biological activity is expected to be insignificant given the transportation time, the nature of the waste (solid or solidified), and the environment of the payload (lack of nutrients, lack of water content, etc.). The temperatures of the payload, given the decay heat limits applicable, are expected to be below the normal usage range for the payload materials, resulting in very little potential for gas generation due to thermal decomposition.

8.0 PAYLOAD CONTAINER AND CONTENTS CONFIGURATION

Thirty-gallon and 55-gallon secondary containers may be used as payload containers in the 10-160B. The available volume of the cask cavity limits the number of payload containers that may be shipped at one time. In the case of 55-gallon drums, a maximum number of ten drums can be loaded into the 10-160B cask. Payload containers must have at least one filter vent. Filter vents shall be legibly marked to ensure both (1) identification of the supplier and (2) date of manufacture, lot number, or unique serial number. Typically, for purposes of radiological safety, TRU waste in the payload container may be packaged in one or more layers of confinement (plastic bags). Bags are closed with a twist and tape, fold and tape or heat-sealed closure. Heat-sealed bags may have a filter vent or be unvented.

Any drum or rigid polymer liner present inside a payload container shall have a filter vent or an opening that is equivalent to or larger than a 0.3-inch diameter hole before the container is transported in the 10-160B.

9.0 ISOTOPIC CHARACTERIZATION AND FISSILE CONTENT

9.1 Requirements

The 10-160B cask payload allows 325 FGE of fissile materials. Plutonium content in excess of 0.74 TBq (20 curies) per cask must be in solid form.

Compliance with the isotopic characterization and fissile content requirements involves the following steps:

- Determination of isotopic composition
- Determination of the quantity of radionuclides
- Calculation of the fissile mass and comparison with 325 FGE limit
- Calculation of plutonium content and confirmation of solid form if exceeding the 20 curie limit.

9.1.1 Isotopic Composition

The isotopic composition of the waste may be determined from direct measurements taken on the product material during the processing or post-process certification at each site, analysis of the waste, or from existing records and PK. The isotopic composition of the waste need not be determined by direct analysis or measurement of the waste unless PK is not available.

9.1.2 Quantity of Radionuclides

The quantity of the radionuclides in each payload container shall be estimated by either PK or direct measurement of the individual payload container, a summation of assay results from individual packages in a payload container, or a direct measurement on a representative sample of a waste stream (such as solidified inorganics). An assay refers to one of several radiation measurement techniques that determine the quantity of nuclear material in TRU wastes. Assay instruments detect and quantify the primary radiation (alpha, gamma, neutron) emanating from specific radionuclides, or a secondary radiation emitted from neutron interrogation techniques. The measured quantity of radiation is then used to calculate the quantity of other radionuclides. That calculation requires knowledge of the isotopic composition of the waste. Combinations of gamma spectroscopy and neutron measurements are often needed to calculate the quantity of nonfissile radionuclides.

9.1.3 Calculation of Fissile Mass

The calculation of the fissile mass shall be performed to demonstrate compliance with the 325 FGE limit.

9.1.4 Calculation of Plutonium Curies

The total plutonium (all plutonium isotopes) activity (curies) for each payload container shall be determined as described above and summed for the entire payload. If contents exceed 20 Ci, the plutonium waste form shall be confirmed as solid.

10.0 DECAY HEAT AND HYDROGEN GAS GENERATION RATES

10.1 Requirements

The hydrogen gas concentration shall not exceed five percent by volume in all void volumes within the 10-160B cask payload during the shipping period (see Attachment C). Payload containers of different

content codes with different bounding G values and resistances may be assembled together as a payload, provided the decay heat limit and hydrogen gas generation rate limit for all payload containers within the payload is conservatively assumed to be the same as that of the payload container with the lowest decay heat limit and hydrogen gas generation rate limit.

10.2 Methodology of Ensuring Compliance with Flammable Gas Concentration Limits

As stated in Section 7, chemical, biological, and thermal gas generation mechanisms are expected to be insignificant in the 10-160B cask. In addition, potentially flammable VOCs are restricted to 500 ppm in the headspace of the 10-160B cask secondary containers (Section 5). Therefore, the only flammable gas of concern for transportation purposes is hydrogen. The concentration of hydrogen within any void volume in a layer of confinement of the payload or in the cask IV has been evaluated during the shipping period (see Attachment C).

Each content code shall have a unique and completely defined packaging configuration. Modeling the movement of hydrogen from the waste material to the payload voids, using the release rates of hydrogen through the various confinement layers, defines the relationship between generation rate and void concentration. This modeling allows determination of the maximum allowable hydrogen generation rate for a given content code to meet the 5% concentration limit. Based on hydrogen gas generation potential, quantified by hydrogen gas generation G values, the gas concentration limit can be converted to a decay heat limit. The maximum allowable hydrogen generation rates and decay heat limits for each content code shall be determined and reported in the site-specific compliance methodology approved in the 10-160B TRU Waste Payload Assessment or in the sub tier appendix. The modeling methodology for determining the hydrogen gas generation rate limit and the decay heat limit shall be presented in each site-specific compliance methodology. Conservative assumptions may be used to introduce an additional margin of safety.

Parameters that govern the maximum allowable hydrogen generation rates and maximum allowable decay heat limits are listed below:

- Waste packaging configuration (i.e., the number and type of confinement layers).
- Release rates of hydrogen from each of these confinement layers.
- Void volume in the cask IV available for gas accumulation.
- Operating temperature and pressure for the payload in the 10-160B cask IV during the shipping period.
- Duration of the shipping period (see Attachment C).
- Hydrogen generation rates quantified by the G value of a waste material (the number of molecules of hydrogen produced per 100 eV of energy absorbed) (see Attachment A for description of dose-dependent G values and the Matrix Depletion Program).

10.3 Determination of Maximum Allowable Hydrogen Generation Rate

The modeling for determination of the maximum allowable generation rates is described below.

10.3.1 Input Parameters

The model parameters that must be quantified include the following:

Waste Packaging Configuration and Release Rates:
Packaging configurations are content code specific and will be documented in the site-specific sub-tier appendices or in the compliance methodology approved in the 10-160B TRU Waste Payload Assessment . The bags, any rigid container with an opening or filter vent, and the drum filter vent all provide some resistance to the release of hydrogen from the container.

Pressure: The pressure is assumed to be isobaric and equal to one atmosphere. The mole fraction of hydrogen in each void volume would be smaller if pressurization is considered and would result in a greater maximum allowable hydrogen gas generation rate. Furthermore, the amount of hydrogen gas generated during the shipping period would be negligible compared to the quantity of air initially present at the time of sealing the 10-160B cask.

Temperature: The system temperature increases and decreases as the result of diurnal and seasonal variations in the environment (i.e, weather, solar radiation). Heat released from the radioactive components in the waste can also contribute to thermal input in the system.

The input parameters that can be described as a function of temperature are the release rate across the different confinement layers in the payload containers and the hydrogen G values for the waste streams. The resistance to the release of hydrogen is a function of temperature as documented in Appendix 6.9 of the CH-TRU Payload Appendices (Reference 12.3). The resistance generally decreases with increasing temperature and increases with decreasing temperature. The release rates across each confinement layer shall be defined at a specified temperature. The specified temperature shall be defined in terms of the expected operating temperature range. Since the release rates decrease with decreasing temperature, the use of the minimum expected operating temperature to calculate the lowest release rate will provide the maximum margin of safety when calculating the hydrogen gas generation rate or decay heat limit. Theoretically, the G value for a waste stream increases with increasing temperature (Reference 12.3). The G values at room temperature (i.e., 70°F) will be adjusted to the maximum expected operating temperature using the Arrhenius equation, unless it is demonstrated that the G values for the waste streams are not a function of temperature. The G values adjusted to reflect the maximum expected operating temperature would provide the maximum margin of safety in the calculated hydrogen gas generation rate or decay heat limits.

These are the important input parameters for determining the maximum allowable hydrogen generation rate limit. Other assumptions used in the mathematical analysis are included in Section 10.3.2.

10.3.2 Mathematical Analysis For Determining the Maximum Allowable Hydrogen Gas Generation Rates

At steady state, the flow rate of hydrogen across each of the confinement layers is equal to the same value and to the hydrogen generation rate. The maximum hydrogen concentration in a payload container with filter vents is reached at steady state. That is, a filter vented container with a hydrogen generation source has increasing concentrations of hydrogen with time until steady state conditions are reached. For the purpose of these calculations, it has been assumed that all payload containers are at steady state at the start of transport.

Once the drums are sealed inside the 10-160B cask IV, concentrations of hydrogen in the different layers increase due to the accumulation of hydrogen in the IV cavity. Some of the hydrogen generated during the transport period would accumulate in the payload containers, with the remainder being released into the cavity. For the purpose of these calculations, the mole fraction of hydrogen in a bag layer is set equal

to the steady state value plus the mole fraction of hydrogen that has accumulated in the cavity. The IV cavity mole fraction of hydrogen is obtained by assuming that all of the hydrogen generated is released into the IV cavity. The maximum hydrogen concentration in the innermost layer is then limited to less than or equal to five (5) volume percent at the end of the shipping period by suitably choosing the gas generation rates. The maximum number of moles of hydrogen which can accumulate in the IV cavity is:

$N_{gen} = (CG)(n_{gen})(t)$

Where:

N_{gen}	=	total moles of hydrogen generated
CG	=	hydrogen gas generation rate per innermost layer of confinement (moles/sec)
n_{gen}	=	number of hydrogen generators (payload containers) in the 10-160B cask
t	=	shipping period duration, s

The maximum mole fraction of hydrogen in the 10-160B IV cavity is then equal to:

$X_{fh} = (N_{gen}/N_{tg}) = \{N_{gen}/[P(V_{void})/RT]\}$

Where:

X_{fh}	=	maximum mole fraction of hydrogen in the 10-160B IV cavity
N_{tg}	=	total moles of gas inside the 10-160B IV cavity
P	=	pressure inside the 10-160B, assumed to be constant at 1 atm (760 mm Hg), because the amount of gas generated is much less than the total amount of air originally in the cavity
V_{void}	=	void volume inside the 10-160B IV cavity (liters)
R	=	gas constant = 62.361 mm Hg-liter/mole-K
T	=	absolute temperature of air in the 10-160B IV cavity at the time of closure = 70°F = 294K

The gas generation rate per innermost confinement layer that will yield a maximum hydrogen concentration of five (5) volume percent is then computed as the following:

$X_{inner} = X_{fh} + (CG)(R_{eff})$

Where:

X_{inner}	=	mole fraction of hydrogen in innermost confinement layer (a value of 0.05 has been used for this parameter since this is the maximum permissible concentration)
R_{eff}	=	the effective resistance to the release of hydrogen (sec/mole)

The effective resistance is computed by summing the individual confinement layer resistances. The resistance of a layer is equal to the reciprocal of the release rate from that layer. After substituting the first two equations into the third for X_{inner} and solving for the gas generation rate the following results:

$CG = (X_{inner})/\{R_{eff} + [(t)(n_{gen})/N_{tg}]\}$

where all terms are as defined previously.

10.4 Determination of Maximum Allowable Decay Limits for Content Codes

The maximum allowable decay heat limit for the CH-TRU waste content codes will be calculated assuming 100% deposition of the emitted energy into the waste within the drum. Specifically, the decay heat limit is calculated from the hydrogen gas generation rate and effective G-Value through the following expression:

$Q = [(CG)(N_A)/(G_{eff}\ \text{molecules}/100\text{eV})][1.602\text{x}10^{-19}\ \text{watt-sec/eV}]$

Where:

CG	=	Hydrogen gas generation rate per innermost confinement layer in one drum (mol/sec).
Q	=	decay heat per innermost confinement layer (watts)
N_A	=	Avogadro's number = $6.023\text{x}10^{23}$ molecules/mole
G_{eff}	=	G (hydrogen gas) = effective G value for flammable gas (molecules of hydrogen formed/100 electron volts [eV] emitted energy).

The maximum allowable decay heat limits for the RH-TRU waste content codes will be determined using the RadCalc Software (Reference 12.4). The current version of RadCalc is a Windows-compatible software program with applications in the packaging and transportation of radioactive materials. Its primary function is to calculate the generation of hydrogen gas by radiolytic production in the waste matrix of radioactive wastes. It contains a robust algorithm that determines the daughter products of selected radionuclides. The various functions in RadCalc can be used separately or together. The procedure is outlined below.

The first step in the evaluation of decay heat limits involves determining the activities of the radionuclides and daughters and the associated hydrogen gas generation rate at the time of sealing based on an initial isotopic ratio for the waste. The generation of hydrogen gas by radiolysis is a function of the energy absorbed by the waste. The second step in the evaluation of decay heat limits involves iterating on the total activity (decay heat limit) given the activity fractions from step one until the allowable hydrogen gas generation rate is obtained.

10.4.1 Databases and Input Parameters Used For Calculation of Maximum Allowable Decay Heat Limits

10.4.1.1 Radionuclide Databases

RadCalc uses radionuclide information, calculated gamma absorption fractions for selected container types, and G values to determine decay heat values. Radionuclide information is taken from FENDL/D-1.0 database (Reference 12.5). The following are a list of radionuclide parameters taken from FENDL/D-1.0 and the values they are used to calculate:

- Radionuclide half-lives are used in calculating specific activity
- Average heavy particle, beta-type radiation, and gamma radiation energies per disintegration are used in decay heat and hydrogen gas generation calculations
- Discrete gamma energies and abundances are used in hydrogen gas generation calculations.

RadCalc uses the ORIGEN2 (Reference 12.6) database for decay calculations. The decay algorithms calculate the activity of the user specified source and daughter products over a specified period of time and the total number of disintegrations accumulated over this same time interval for each radionuclide. Parameters relevant to these calculations include atomic mass, atomic number, and state. These

parameters are used for radionuclide identification and conversions. The decay constant and the branching ratios for decay modes are also used in the decay algorithms.

10.4.1.2 Gamma Absorption Fraction Input Parameters

RadCalc uses the total energy emitted by heavy particle and beta-type decay in calculating the volume of hydrogen produced. However, only a percent of gamma energy will be absorbed in the package and the waste. The absorbed gamma energy is a function of energy, waste density, material type, and geometry. The gamma energy absorbed by the waste is a function of the gamma emission strength, the quantity of gamma ray energy that is absorbed by collision with a waste particle, and the number of particles which interact with the gamma ray. Therefore, gamma energy absorption increases with increasing waste density. For a given waste density, a larger container will contain more particles, and therefore a higher percentage of the gamma ray energy would be absorbed than in a smaller container. The total cumulative absorbed dose for all nuclides and decay modes at time, t is evaluated as:

$$D_{total}(t) = \sum_{i=1}^{NR} \Gamma A C_i / \&_i \, (0.82 E_i^{\forall} + E_i^{\exists} + E_i^{\ni} + E_i^{x})[1 - \exp(-\&_i t)]$$

where,

$D_{total}(t)$	=	Total cumulative absorbed dose at time, t (rad)
A	=	A proportionality constant equal to 1.84×10^{10} rad gram MeV^{-1} yr^{-1} Ci^{-1}
C_i	=	The specific activity of the "i"th nuclide in Curies/gram of waste
$\&_i$	=	The decay constant of the "i"th radionuclide (yr^{-1})
NR	=	Number of radionuclides
$E_i^{\forall}$	=	∀ energy in MeV of the "i"th radionuclide extracted from Flaherty et al. (Reference 12.11)
$E_i^{\exists}$	=	Average beta energy in MeV of the "i"th nuclide. The average beta energy is approximately one-third of the sum of the possible beta emissions multiplied by the relative abundance of each emission and were obtained from Flaherty et al. (Reference 12.7).
Eix	=	The absorbed secondary energy in MeV of the "i"th radionuclide. The secondary radiations result from the transition of a radionuclide from an excited state to the ground state and were obtained from Flaherty et al. (Reference 12.7).
Eiϋ	=	The absorbed gamma ray energy in MeV of the "i"th nuclide. The fraction of gamma energy that is absorbed by the waste is a function of the waste density and waste container geometry, and is evaluated for each radionuclide "i" as:

$$E_i^{\ni} = \Gamma_j \, n_{ij} \, f_{ij} \, E_{ij}^{\ni}$$

where,

Γj	=	the summation of the fractions of the gamma ray energies absorbed for all gamma emissions of the "i"th nuclide.
n_{ij}	=	the abundance of the "j"th gamma ray per decay of the "i"th nuclide
fij	=	the fraction of energy, of the "j"th gamma ray of the "i"th nuclide that is absorbed in the waste.
$E_{ij}^{\ni}$	=	the energy in MeV, of the "j"th gamma ray of the "i"th nuclide.

RadCalc uses curve fits obtained from Flaherty et al. (Reference 12.7) and recalculated using the Monte Carlo N-Particle (MCNP) transport code (Reference 12.8) for ten containers, for obtaining the absorbed gamma dose.

The cask is not currently recognized by the RadCalc software. Therefore, another container with dimensions directly proportional to the cask was used in the calculations.

10.4.1.3 G Value Data

G values for TRU waste are content specific. G values are determined based on the bounding materials present in the payload. The G values at room temperature (i.e., 70°F) will be adjusted to the maximum expected operating temperature using the Arrhenius equation (unless data shows that the G values are temperature independent) in order to introduce a greater margin of safety in the calculated hydrogen gas generation rate or decay heat limits. The methodology associated with the determination of dose-dependent G values pursuant to the Matrix Depletion Program is further discussed in Attachment A of this Appendix.

10.4.2 Input Parameters

The input parameters for the RadCalc software can be placed in three groups: (1) container data, (2) waste data, and (3) source data.

10.4.2.1 Container Data

RadCalc requires as input the following parameters associated with the container for which the maximum allowable decay heat limit is being calculated:

Container Type - The payload container for the waste material
Container Dates - Date of generation, date of sealing, and shipping period
Package Void Volume - void volume of the payload container.

A 6- by 6-foot liner with a volume equal to the cask is used to represent the payload container in the RadCalc input file as the RadCalc database does not include the cask. The package void volume for a 10-160B cask is 1938 liters as shown earlier.

10.4.2.2 Waste Data

RadCalc requires as input the following parameters associated with the waste for which the maximum allowable decay heat limit is being calculated:

Physical Form – liquid, solid, or gas
Waste Volume – volume of the waste, cm^3
Waste Mass – mass of the waste, g
G Value – G value of the waste, molecules per 100 eV

Liquids and gas wastes are prohibited in the 10-160B cask. The volume of the waste is determined based on the maximum number of 55-gallon drums that can be placed in the 10-160B cask. The waste volume in one drum is assumed to be 217 liters per drum (the external volume of a 55-gallon waste drum) and 2170 liters for 10 drums of waste in the cask. The waste volume is used by RadCalc, along with the waste mass, to determine the volume of hydrogen generated in the cask. The mass of the waste is calculated based on the assumed bulk density of the waste. The volume of hydrogen generated is a

function of container waste density and geometry (Reference 12.7). The most conservative estimate of the volume of hydrogen (greatest volume) would occur at the highest possible bulk density of the waste. Appropriate density values for the RH-TRU content codes are discussed in the individual site-specific sub-tier appendices or in the compliance methodologies approved in the 10-160B TRU Waste Payload Assessment.

10.4.2.3 Source Data

RadCalc requires as input the following parameters associated with the source for which the maximum allowable decay heat limit is being calculated:

Isotopic Composition - List of radionuclides present in the waste
Activity - Reported activities of the listed radionuclides in curies or Becquerel.

10.4.3 Procedure For Determining Maximum Allowable Decay Heat Limits

The necessary inputs are provided to the code prior to initiating a run. A time period equivalent to the shipping period (Attachment C) is conservatively assumed between the date of beginning of decay and date of analysis. The model is run with the initial isotopic composition and activity and the corresponding hydrogen gas generation rate is obtained. It is compared with the maximum allowable hydrogen gas generation rate as obtained from Section 10.3, and the scaling factor is obtained by dividing the maximum allowable hydrogen gas generation rate by the RadCalc obtained rate. The isotopic composition is scaled by this differential factor. This is done on the basis of the assumption that the maximum decay heat occurs at the time of maximum activity that will result in the maximum hydrogen gas generation rate. The associated decay heat value will be the maximum decay heat limit as the decay heat limit shares a direct relationship with the hydrogen gas generation rate, independent of time.

10.5 Methodology for Compliance with Payload Assembly Requirements

Prior to shipping, the Transportation Certification Official at the shipping site (TCO) shall ensure that the 10-160B Cask payload consists of payload containers belonging to the same or equivalent content code. In the event that payload containers of different content codes with different bounding G values and resistances are assembled together in the 10-160B Cask, the TCO shall ensure that the decay heat and hydrogen gas generation rate for all payload containers within the payload are less than or equal to the limits associated with the payload container with the lowest decay heat limit and hydrogen gas generation rate limit.

11.0 WEIGHT

The weight limit for the contents of the loaded cask is 14,500 pounds.

12.0 REFERENCES

12.1 U.S. Department of Energy (DOE), 2002, “Contact-Handled Transuranic Waste Acceptance Criteria for the Waste Isolation Pilot Plant,” Rev. 0, *DOE/WIPP-02-3122*, U.S. Department of Energy, Carlsbad Field Office, Carlsbad, New Mexico.

12.2 Hatayama, H.K., J.J. Chen, E.R. de Vera, R.D. Stephens, and D.L. Storm, “A Method for Determining the Compatibility of Hazardous Wastes,” *EPA-600/2-80-076*, U.S. Environmental Protection Agency, Cincinnati, Ohio, 1980.

12.3 U.S. Department of Energy (DOE), "Safety Analysis Report for the TRUPACT-II Shipping Package," and associated Contact Handled Transuranic Waste Authorized Methods for Payload Control (CH-TRAMPAC) and CH-TRU Payload Appendices, Current Revisions, U.S. Department of Energy Carlsbad Field Office, Carlsbad, New Mexico.

12.4 Duratek Federal Services, Richland, Washington, "RadCalc 3.0 Volume I: User's Manual," prepared for the National Transportation Program, U. S. Department of Energy, (November 2001).

12.5 FENDL/D Version 1, January 1992 is a decay data library for fusion and (other) applications. Summary documentation by A. B. Pashchenko. Index No. IAEA-NDS-167 in Index to the IAEA-NDS-Documentation Series.

12.6 Croff, A. G., 1980, A Revised and Updated Version of the Oak Ridge Isotope Generation and Depletion Code, ORNL-5621, Oak Ridge National Laboratory, Oak Ridge, Tennessee.

12.7 Flaherty, J.E., A. Fujita, C.P. Deltete, and G.J. Quinn, 1986, "A Calculational Technique to Predict Combustible Gas Generation in Sealed Radioactive Waste Containers," GEND 041, EG&G Idaho, Inc., Idaho Falls, Idaho.

12.8 Breismeister, J.F., editor, "MCNP - A General Monte Carlo N-Particle Transport Code," Version 4a, Los Alamos National Laboratory Report LA 12625, Los Alamos, New Mexico.

Attachment A

Use of Dose-Dependent G Values for TRU Wastes

A.1.0 BACKGROUND

This attachment describes controlled studies and experiments that quantify the reduction in the rate of hydrogen gas generation (G value) over time based on the total dose received by the target matrix. Over time and with constant exposure to radiation, hydrogen is removed from the hydrogenous waste or packaging material (the matrix), thus decreasing the number of hydrogen bonds available for further radiolytic breakdown (the matrix is depleted). Therefore, when the alpha-generating source is dispersed in the target matrix, it will affect only that portion of the target material that is present in a small spherical volume surrounding the source particle. As the amount of available hydrogen is reduced over time, the effective G value decreases with increasing dose toward a value that is defined as the "dose-dependent G value." This phenomenon of matrix depletion has been studied and observed in previous studies (see Appendix 3.3 of the CH-TRU Payload Appendices [Reference A.7.1]). A formal study was recently undertaken to quantify dose-dependent G values under strictly controlled conditions and evaluate their applicability to transuranic (TRU) wastes (Reference A.7.2). This appendix summarizes the results of this study and derives dose-dependent G values for TRU waste materials, as applicable.

A.2.0 OVERVIEW OF THE MATRIX DEPLETION PROGRAM

The Matrix Depletion Program (MDP), established as a joint venture by the U.S. Department of Energy (DOE) National TRU Waste Program and the DOE Mixed Waste Focus Area, is comprised of the following elements:

1. Laboratory experiments for the assessment of effective G values as a function of dose for matrices expected in contact-handled (CH)-TRU wastes (polyethylene, polyvinyl chloride, cellulose, etc.), as well as an assessment of the impact of other variables (isotope, temperature, etc.) on the dose-dependent G values.

2. Measurements of effective G values and hydrogen concentrations in real waste and comparisons with dose-dependent G values.

3. Analysis to calculate effective G values from fundamental nuclear and molecular mechanisms.

A total of 60 one-liter test cylinders containing the simulated TRU waste materials were used, with two replicates for each test. Solid waste matrices (plastics and cellulose) were prepared by sprinkling the radioactive isotope powders over the matrix, folding the matrix over the contaminated surfaces, securing them, and placing them in test cylinders. Solidified waste matrices (cement) were mixed with a solution of dissolved plutonium oxide, water, and sodium hydroxide to adjust the pH. The test cylinders were connected to measurement devices that facilitated sampling of generated gases and quantifying the gas generation over time. The entire test apparatus was controlled by a personal computer through LABVIEW software.

All activities of the MDP were performed under a documented quality assurance (QA) program that specified the performance-based QA/quality control requirements for all aspects of the program (Reference A.7.3). The experiments under the MDP were designed using an U.S. Environmental Protection Agency established procedure to formulate data quality objectives. QA objectives for the MDP were defined in terms of precision, accuracy, representativeness, completeness, and comparability. All data were validated and verified pursuant to the performance objectives of the program. The MDP was run for a duration of approximately three years.

A.3.0 RESULTS AND CONCLUSIONS FROM THE MDP

Results from the MDP are described in detail in the MDP final report (Reference A.7.2) and are summarized in Table A-1 in terms of the dose-dependent G values for each matrix tested.

For all matrices, these dose-dependent G values were achieved within a maximum dose of 0.006 watt*year (product of watts times years). For example, for a waste container with a watt loading of 0.1 watt, the dose-dependent G value shown in Table A-1 would be reached after 0.06 years or 22 days. The lower the watt loading, the longer it would take for the watt*year criteria to be satisfied and the dose-dependent G value to be applicable.

Table A-1. Experimental Dose-Dependent G Values

Matrix	Current Waste Material Type G Value	Number of Observations	Mean	Standard Deviation	95% Upper Tolerance Limit
Cement	1.3	202	0.25	0.18	0.58
Dry Cellulose	3.4	302	0.27	0.18	0.59
Polyethylene	3.4	186	0.23	0.22	0.64
Polyvinyl Chloride	3.4	99	0.14	0.19	0.50
Wet Cellulose	3.4	276	0.44	0.36	1.09

Source: Reference A.7.1.

The following conclusions can be drawn from the results of the MDP:

- Increasing dose (product of the decay heat loading and elapsed time) decreases the effective G value for hydrogen due to depletion of the matrix in the vicinity of the alpha-emitting radioactive source particle. The lower G value, called the "dose-dependent G value," is applicable after a dose of 0.006 watt*years.

- As with initial G values, the dose-dependent G values are a function of the waste matrix.

- Dose-dependent G values for wet cellulosics were higher than those for dry cellulosics because of the presence of water.

- The dose-dependent G values were independent of temperature based on testing performed at room temperature and at 140°F.

- Experiments performed with different particle sizes show that while initial G values could be higher for smaller particle sizes, the dose-dependent G values for all particle sizes tested are bounded by the values shown in Table A-1.

- Previous experiments that included agitation of cylinders similar to those used in the MDP indicated that agitation did not affect dose-dependent G values (See Section A.4.0).

- Isotopic composition did not have a significant impact on the dose-dependent G values based on experiments performed with two different isotopes of Pu (^{238}Pu and ^{239}Pu).

Data from actual CH-TRU waste containers at the Rocky Flats Environmental Technology Site and the Idaho National Engineering and Environmental Laboratory show that even when compared to the mean dose-dependent G values from the matrix depletion experiments, G values from real waste containers are lower. Theoretical analysis, using nuclear and molecular level mechanisms, also shows that hydrogen generation from radiolysis and matrix depletion is consistent with the experimental results from the MDP.

A.4.0 EFFECTS OF AGITATION ON DOSE-DEPENDENT G VALUES

The effects of agitation on dose-dependent G values have been evaluated by previous studies at both the laboratory-scale and drum-scale levels, and agitation has been found to have no impact on dose-dependent gas generation rates. Agitation could occur under transportation conditions but, as shown below, does not cause redistribution of the radionuclides to a nondepleted portion of the waste matrix and therefore does not cause an increase in the dose-dependent G values as shown in this section.

The earliest study of the effects of agitation on gas generation rates was performed by Zerwekh at the Los Alamos National Laboratory (LANL) in the late 1970s (Reference A.7.4). Zerwekh prepared an experimental array of 300-cm^3 stainless steel pressure cylinders, each loaded with 52.5 grams of a single or a combination of TRU waste matrix materials. Materials tested included cellulosics, polyethylene (PE) (low-density) bags, PE (high-density) drum liner material, and other typical TRU waste material. Net gas G values as a function of elapsed time were derived for each of the test cylinders and showed the characteristic decrease in G value with dose. Thorough mechanical shaking of two of the cylinders on two different occasions did not affect the rate of gas generation (Reference A.7.4).

In a second study, researchers at LANL retrieved six drums of ^{238}Pu contaminated waste from storage to study gas generation (Reference A.7.5). The wastes were contained in 30-gallon drums and consisted of either mixed cellulosic wastes or mixed combustible wastes. The drums ranged in age from four to ten years. Two of the drums containing mixed combustible wastes were tumbled end over end in a drum tumbler for four hours (Reference A.7.5). The researchers also reported G values for three drums of newly generated waste that were previously characterized. All six retrieved drums had measured G values that were lower than those measured for newly generated drums. The researchers concluded that the retrieved drums' effective hydrogen G values corroborate the matrix depletion observed for the laboratory-scale experiments in Reference A.7.4. Also, because of the vigorous nature of the agitation experienced by two of the four-year-old drums, the researchers concluded that radionuclide redistribution does not occur under transportation conditions (Reference A.7.5).

More recently, experiments on alpha radiolysis were conducted at LANL by Smith et al. (Reference A.7.6) to determine radionuclide loading limits for safe on-site storage of containers at LANL. Simulated TRU waste matrices in the form of cellulose (cheesecloth and computer paper) and PE (bottle and bag material forms) were contaminated with pre-weighed amounts of $^{238}PuO_2$ powder. The first PE experiment (referred to as PE test cylinder 1) used a PE bottle to allow any potential later redistribution of the radionuclide particles to fresh matrix surfaces. The radionuclide powder was poured into the bottle, which was sealed and gently rolled to allow contamination of the sides of the bottle. The bottle was returned to an upright position and the lid was punctured with an approximately 0.5-inch diameter hole to allow free movement of generated gas from the bottle to the test canister. It was noted that the $^{238}PuO_2$ powder adhered to the walls of the bottle and very little, if any, collected at the bottom. The remaining five test sample matrices were prepared by uniformly sprinkling the powder across a letter-sized sheet of the waste matrix, folding the sheet in toward the center from each end, and finally rolling each sheet into a cylindrical shape of about 2 by 4 inches. The six test matrices were placed inside six cylindrical, 2.06 liter stainless steel sealed canisters. Gas samples were extracted periodically and analyzed by mass spectrometry.

The first test canister for each waste material was subjected to vigorous dropping, rolling several times, and shaking on day 188 to simulate drum handling and transportation that could result in redistribution of the $^{238}PuO_2$ to fresh nondepleted portions of the waste matrix. Any agitation effects were expected to be most pronounced for the test canister containing the PE bottle in PE test cylinder 1, because some aggregation of the powder at the bottom of the bottle was expected. However, no change in the effective hydrogen G value was observed for either the cellulose or PE test canisters.

In summary, three separate studies have investigated the ability of agitation to redistribute radionuclide particles to nondepleted surfaces of TRU waste matrices. All three studies conclusively showed that the dose-dependent G values are not impacted by agitation during transportation. Application of dose-dependent effective G values is discussed in Section A.5.0.

A.5.0 APPLICATION OF DOSE-DEPENDENT G VALUES TO CH- and RH-TRU WASTES

Application to CH-TRU dose-dependent G values, based on the results of the MDP, are applicable to solid organic and solid inorganic CH-TRU waste material types. Solidified organic and inorganic solid wastes will be governed by the initial G values under all conditions because the solidified, aqueous nature of these waste forms, in theory, precludes observation of matrix depletion (as the matrix near the Pu is depleted, water can move to replace the depleted matrix). The watt*year criteria used to apply dose-dependent G values is twice the highest value recorded in the experiments. The dose-dependent G values chosen for the TRU waste materials are the 95% upper tolerance limit values shown in Table A-1. The application of dose-dependent G values to the waste types is as follows:

- Solid Inorganic Waste: Dose-dependent G value (H_2) for containers meeting a watt*year criteria of 0.012 is governed by assuming polyethylene as the packaging material, with a G value (H_2) of 0.64.

- Solid Organic Waste: Dose-dependent G value for containers meeting a watt*year criteria of 0.012 is governed by wet cellulosic materials in the waste, with a G value (H_2) of 1.09.

As can be seen from Table A-1, the above dose-dependent G values represent conservative values that are more than two times the mean value from the experiments.

The phenomenon of matrix depletion primarily stems from the nature of the waste matrix and the type of penetrating radiation; thus, if the waste matrix and radiation type are properly accounted for, G value results obtained for CH-TRU waste can be applicable to RH-TRU waste as well.

With respect to waste matrix, both CH- and RH-TRU waste are characterized by a large percentage of the materials shown in Table A-1. Thus, the required level of conservatism will be attained by assuming that the waste is comprised of the matrix with the greatest associated G value.

With respect to radiation type, both CH- and RH-TRU waste are characterized by large amounts of alpha and beta emitters; the primary difference between the two waste forms is the noticeable presence of gamma emitters in RH-TRU waste. Thus, while the G value for CH-TRU waste is dependent primarily on the emitted decay heat (since most or all of the alpha and beta radiation is absorbed by the waste matrix and contributes to hydrogen gas generation), the G value for RH-TRU waste is dependent on the actual fraction of the decay heat that is absorbed by the waste matrix.

Since the results of the MDP are applicable only to alpha and beta radiation, while gamma radiation effects were not quantified, G values for RH-TRU waste can be separated into those for alpha, beta, and gamma radiation and treated accordingly. Thus, RH-TRU waste G values for alpha and beta radiation can be treated as being dose-dependent and the lower “dose-dependent G value” used after a dose of

0.012 watt*years (twice the highest value recorded in the experiments), while G values for gamma radiation can conservatively be treated as not being dose-dependent and the initial G value used.

A.6.0 COMPLIANCE WITH WATT*YEAR CRITERIA

For RH-TRU waste, content codes using dose-dependent G values to obtain maximum allowable decay heat limits are required to comply with the watt*year criteria of 0.012 watt*years. Demonstration of compliance with the 0.012 watt*year criteria is carried out as follows:

1. Determine maximum allowable decay heat (Q) using the α and β dose-dependent G values and non-dose-dependent G values for γ radiation.

2. Determine decay heat limit that excludes the gamma radiation contribution (Q_{allow}) as a function of the maximum allowable hydrogen gas generation rate (Cg) and bounding G value for the content code as:

$$Q_{allow} = \frac{Cg \ * \ N_A \ * \ 1.602(10\ )^{-19} \ watt\text{-sec}/eV}{G}$$

where,

Cg = Maximum allowable hydrogen gas generation rate limit.

G = Bounding G value (molecules of hydrogen formed/100 electron volts [eV] emitted energy)

N_A = Avogadro's number (6.023×10^{23} molecules/mole).

3. Determine the Q_{allow}/Q ratio, which represents the minimum fraction of the total container decay heat that excludes the gamma radiation contribution.

4. Calculate the decay heat value for a container ($Q_{watt*yr}$) for watt*year compliance as:

$$Q_{watt*yr} = \frac{Q_{allow}}{Q} * Q_{actual}$$

where, Q_{actual}, is the actual decay heat value for the container.

5. The watt*year for the payload is calculated as $Q_{watt*yr}$ times the elapsed time, and this value is compared to the 0.012 watt*year limit. The elapsed time is the time elapsed between the time of generation of the payload and the time of sealing of the payload.

A.7.0 REFERENCES

A.7.1. U.S. Department of Energy (DOE), "Safety Analysis Report for the TRUPACT-II Shipping Package," and associated Contact Handled Transuranic Waste Authorized Methods for Payload Control (CH-TRAMPAC) and CH-TRU Payload Appendices, Current Revisions, U.S. Department of Energy Carlsbad Field Office, Carlsbad, New Mexico.

A.7.2. Idaho National Engineering and Environmental Laboratory, "TRUPACT-II Matrix Depletion Program Final Report," *INEL/EXT-98-00987*, Rev. 1, prepared for the U.S. Department of Energy, Idaho Operations Office, Idaho Falls, Idaho (1999).

A.7.3. Connolly, M.J., G.R. Hayes, T.J. Krause, and J.S. Burt, "TRUPACT-II Matrix Depletion Quality Assurance Program Plan," INEL95/0361, Rev. 1, Idaho National Engineering and Environmental Laboratory, Idaho Falls, Idaho (1997).

A.7.4. Zerwekh, A. "Gas Generation from Radiolytic Attack of TRU-Contaminated Hydrogenous Waste." LA-7674-MS, Los Alamos National Laboratory, Los Alamos, New Mexico, 1979.

A.7.5. Zerwekh, A., J. Warren, and S. Kosiewicz. "The Effect of Vibration on Alpha Radiolysis of Transuranic (TRU) Waste." Proceedings of Symposium on Waste Management, Tucson, Arizona, 1993.

A.7.6. Smith, M.C., E.L. Callis, J.H. Cappis, E.M. Foltyn, R.S. Marshall, and J. Espinoza. "Alpha Radiolytic Gas Generation: Determination of Effective G-values." Benchmark Environmental Corporation, Albuquerque, New Mexico, 1997.

Attachment B

Chemical Compatibility of TRU Waste Content Codes

B.1.0 INTRODUCTION

This attachment describes the method used for demonstrating chemical compatibility in a given payload container, within a given waste stream/content code, and among content codes for the -10-160B Cask payload. The chemical compatibility analyses cover normal conditions of transport as well as hypothetical accident conditions.

B.2.0 METHODOLOGY FOR CHEMICAL COMPATIBILITY ANALYSES

The chemical compatibility analysis was performed using the methods described in the EPA document "A Method for Determining the Compatibility of Hazardous Wastes" (Reference B.3.1).

Waste streams/content codes are classified as potentially chemically "incompatible" if the potential exists for any of the following reactions:

- explosion
- heat generation
- gas generation (flammable gases)
- pressure build up (nonflammable gases)
- toxic by-product generation
- fire
- violent polymerization
- solubilization of toxic substances.

Note: Solubilization of toxic substances and toxic byproduct generation are not directly a concern for transportation of waste in the 10-160B Cask payload but have been included for completeness.

Each generator and storage site has produced a comprehensive list of chemicals present in an approved content code. These chemical components are determined by examining the process technology, and by comprehensive analyses of the process knowledge. Under this system, all chemical inputs into the system are accounted for, even though all of these components may not be a final part of the waste. For example, generator sites might include both acids and bases in their lists, even though the two groups have been neutralized prior to placement in a payload container.

A list of chemicals/materials that may be present in TRU waste in concentrations greater than or equal to 1 percent by weight was compiled based on process knowledge from the potential waste shipping sites, as shown in Table B-1. The chemical compatibility analyses for the 10-160B Cask payload are then based on this table.

Although Table B-1 only identifies chemicals/materials in TRU waste in concentrations greater than or equal to 1 percent by weight, interactions involving compounds present in trace quantities (<1 percent by weight) do not pose an incompatibility problem for the following reasons:

- Most trace chemicals reported by the sites are in concentrations well below the trace limit of 1 weight percent.

- The trace chemicals are usually dispersed in the waste, which further dilutes concentrations of these materials.

- Total trace chemicals within a payload container are limited to less than 5 weight percent.

Table B-1
Table of Allowable Materials for TRU Waste[a]

Absorbent polymers, organic
Absorbents/adsorbents (e.g., Celite®, diatomaceous earth, diatomite, Florco®, Oil-Dri®, perlite, vermiculite)
Acids (inorganic and organic)
Alcohols (e.g., butanol, ethanol, isopropanol, methanol)
Alumina cement
Aquaset® products (for aqueous solutions)
Aqueous sludges or solutions
Asbestos
Ash (e.g., ash bottoms, fly ash, soot)
Asphalt
Bakelite® b
Batteries, dry (e.g., flashlight)
Caustics
Cellulose (e.g., Benelex®, cotton Conwed®, paper, rags, rayon, wood)
Cellulose acetate butyrate
Cellulose propionate
Ceramics (e.g., molds and crucibles)
Chlorinated polyether
Clays (e.g., bentonite)
Concrete
Detergent, solid (e.g., emulsifiers, surfactants)
Envirostone® (no organic emulsifiers allowed)
Esters (e.g., ethyl acetate, polyethylene glycol ester)
Ethers (e.g., ethyl ether)
Fiberglass (inorganic and organic)
Filter media (inorganic and organic)
Firebrick
Glass (e.g., borosilicate glass, labware, leaded glass, Raschig rings)
Graphite (e.g., molds and crucibles)
Greases, commercial brands
Grit
Halogenated organics (e.g., bromoform; carbon tetrachloride; chlorobenzene; chloroform; 1,1-dichloroethane; 1,2-dichloroethane; 1,1-dichloroethylene; cis-1,2-dichloroethylene; methylene chloride; 1,1,2,2-tetrachloroethane; tetrachloroethylene; 1,1,1-trichloroethane; 1,1,2-trichloroethane; trichloroethylene; 1,1,2-trichloro-1,2,2-trifluoroethane)
Heel (e.g., ash heel; soot heel; firebrick heel; sand, slag, and crucible heel)
Hydrocarbons, aliphatic (e.g., cyclohexane, n-paraffin hydrocarbons)
Hydrocarbons, aromatic (e.g., benzene; ethyl benzene; toluene; 1,2,4-trimethylbenzene; 1,3,5-trimethylbenzene; xylene)
Insulation (inorganic and organic)
Ketones (e.g., acetone, methyl ethyl ketone, methyl isobutyl ketone)
Leaded rubber (e.g., gloves, aprons, sheet material)
Leather
Magnesia cement (e.g., Ramcote® cement)
Magnesium alloy
Metal hydroxides
Metal oxides (e.g., slag)

Table B-1
Table of Allowable Materials for TRU Waste[a]
(Continued)

Metals (e.g., aluminum, cadmium, copper, steel, tantalum, tungsten, zinc)
Nitrates (e.g., ammonium nitrate, sodium nitrate)
Oil (e.g., petroleum, mineral)
Organophosphates (e.g., tributyl phosphate, dibutyl phosphate, monobutyl phosphite)
Paint, dry (e.g., floor/wall paint, ALARA)
Petroset® products (for aqueous solutions)
Plastics [e.g., polycarbonate, polyethylene, polymethyl methacrylate (Plexiglas®, Lucite®), polysulfone, polytetrafluoroethylene (Teflon®), polyvinyl acetate, polyvinyl chloride (PVC), polyvinylidene chloride (saran)]
Polyamides (nylon)
Polychlorotrifluoroethylene (e.g., Kel-F®)
Polyesters (e.g., Dacron®, Mylar®)
Polyethylene glycol (e.g., Carbowax®)
Polyimides
Polyphenyl methacrylate
Polypropylene (e.g., Ful-Flo® filters)
Polyurethane
Polyvinyl alcohol
Portland cement
Resins (e.g., aniline-formaldehyde, melamine-formaldehyde, organic resins, phenol-formaldehyde, phenolic resins, urea-formaldehyde)
Rubber, natural or synthetic [e.g., chlorosulfonated polyethylene (Hypalon®), ethylene-propylene rubber, EPDM, polybutadiene, polychloroprene (neoprene), polyisobutylene, polyisoprene, polystyrene, rubber hydrochloride (pliofilm®)]
Salts (e.g., calcium chloride, calcium fluoride, sodium chloride)
Sand/soil (inorganic and organic)
Trioctyl phosphine oxide
Water
Waxes, commercial brands
Other inorganic materials

[a]Other chemicals or materials not identified in this table are allowed provided that they meet the requirements for trace constituents (less than one weight percent of the payload container individually; less than five weight percent of the payload container combined). All materials in the final waste form must be inert (nonreactive), be in a nonreactive form, or have been rendered nonreactive.

[b]Bakelite is a trademark for materials that can be composed of several different polymers, including polyethylene, polypropylene, epoxy, phenolic, polystyrene, phenoxy, perylene, polysulfone, ethylene copolymers, ABS, acrylics, and vinyl resins and compounds.

- Trace chemicals that might be incompatible with materials/chemicals in concentrations greater than or equal to 1 percent by weight would have reacted during the waste generating process prior to placement in payload containers.

- The waste is either solidified and immobilized (solidified materials) or present in bulk form as a solid (solid materials). In almost all cases, any possible reactions take place before the waste is generated in its final form.

Potential incompatibilities between the allowable materials/compounds listed in Table B-1 have been analyzed for the 10-160B payload. The analysis assigned EPA chemical reactivity group numbers and names to each allowable material. The reactivity group numbers were assigned based on information provided in Reference B.3.1. If the allowable material (or chemical) is a non-reactive inorganic material (not covered under the EPA reactivity group numbers), it was assigned a reactivity group number of "0" to reflect a complete analysis for all allowable materials (materials assigned a reactivity group number of "0" do not present a compatibility concern). The compiled list of allowable materials and assigned reactivity group numbers is provided in Attachment 1.0.

The list of allowable materials and assigned reactivity group numbers was sorted by reactivity group number and then condensed to form a list of the represented reactivity groups (Attachment 2.0).

Using the list of represented reactivity groups, a hazardous waste compatibility chart was generated. The chart, which is provided in Attachment 3.0, is a reduced version of the hazardous waste compatibility chart presented in Reference B.3.1. The chart summarizes the potential types of reactions possible between each of the reactivity groups represented in the list of allowable materials. The reaction codes and consequences of the reactions are specified for each combination of two reactivity groups.

Using the waste compatibility chart, a list of potential chemical incompatibilities in the TRU waste was generated. The list, which is presented in Attachment 4.0, also presents assessments of whether or not the reaction associated with each of the potential chemical incompatibilities will or will not occur. The results of the assessments indicated that no chemical incompatibilities will occur. Therefore, by precluding all potential incompatibilities, the chemicals/materials identified in Table B-1 are determined to be compatible for the 10-160B Cask payload.

Chemical lists provided for site-specific TRU waste content codes identified for shipment in the 10-160B Cask are a subset of Table B-1. Chemical incompatibilities therefore do not exist in and across these content codes. Only content codes with chemical lists that have been evaluated by this process and determined to be compatible shall be approved for shipment in the 10-160B Cask.

B.3.0 REFERENCES

B.3.1 Hatayama, H. K., Chen, J.J., de Vera, E.R., Stephens, R.D., Storm, D.L., "A Method for Determining the Compatibility of Hazardous Wastes," EPA-600/2-80-076, EPA, Cincinnati, Ohio, 1980.

Attachment 1.0

Lists of Allowable Materials and
Associated Reactivity Groups

Lists of Allowable Materials and Associated Reactivity Groups		
Allowable Chemical/Material[a]	**Reactivity Group[b]**	
	Name	**Number[c]**
Absorbent polymers, organic	Combustible and flammable materials, miscellaneous	101
Absorbents/adsorbents (e.g., Celite®, diatomaceous earth, diatomite, Florco®, Oil-Dri®, perlite, vermiculite)	Other solidification materials and absorbents/adsorbents	0
Acids, inorganic	Acids, Mineral, Non-oxidizing	1
Acids, inorganic	Acids, Mineral, Oxidizing	2
Acids, organic	Acids, organic	3
Alcohols (e.g., butanol, ethanol, isopropanol, methanol)	Alcohols and Glycols	4
Alumina cement	Water reactive substance	107
Aquaset® products (for aqueous solutions)	Other solidification materials and absorbents/adsorbents	0
Aqueous sludges or solutions	Other solidification materials and absorbents/adsorbents	0
Asbestos	Other Inorganics (non-reactive)	0
Ash (e.g., ash bottoms, fly ash, soot)	Other Inorganics (non-reactive)	0
Asphalt	Combustible and flammable materials, miscellaneous	101
Bakelite®	Combustible and flammable materials, miscellaneous	101
Batteries, dry (e.g., flashlight)	Metals, alkali and alkaline earth, elemental and alloys	21
Caustics	Caustics	10
Cellulose (e.g., Benelex®, cotton Conwed®, paper, rags, rayon, wood)	Combustible and flammable materials, miscellaneous	101
Cellulose acetate butyrate	Polymerizable compounds	103
Cellulose propionate	Polymerizable compounds	103
Ceramics (e.g., molds and crucibles)	Other Inorganics (non-reactive)	0
Chlorinated polyether	Ethers	14
Clays (e.g., bentonite)	Other Inorganics (non-reactive)	0
Concrete	Other solidification materials and absorbents/adsorbents	0
Detergent, solid (e.g., emulsifiers, surfactants)	Esters	13
Detergent, solid (e.g., emulsifiers, surfactants)	Hydrocarbons, aromatic	16
Detergent, solid (e.g., emulsifiers, surfactants)	Hydrocarbons, aliphatic, unsaturated	28
Detergent, solid (e.g., emulsifiers, surfactants)	Organophosphates, phosphothioates, and phosphodithioates	32
Envirostone® (no organic emulsifiers allowed)	Other solidification materials and absorbents/adsorbents	0
Esters (e.g., ethyl acetate, polyethylene glycol ester)	Esters	13
Ethers (e.g., ethyl ether)	Ethers	14
Fiberglass, inorganic	Other Inorganics (non-reactive)	0

Lists of Allowable Materials and Associated Reactivity Groups		
Allowable Chemical/Material[a]	**Reactivity Group[b]**	
	Name	**Number[c]**
Fiberglass, organic	Combustible and flammable materials, miscellaneous	101
Filter media, inorganic	Other Inorganics (non-reactive)	0
Filter media, organic	Combustible and flammable materials, miscellaneous	101
Firebrick	Other Inorganics (non-reactive)	0
Glass (e.g., borosilicate glass, labware, leaded glass, Raschig rings)	Other Inorganics (non-reactive)	0
Graphite (e.g., molds and crucibles)	Other Inorganics (non-reactive)	0
Greases, commercial brands	Combustible and flammable materials, miscellaneous	101
Grit	Other Inorganics (non-reactive)	0
Halogenated organics (e.g., bromoform; carbon tetrachloride; chlorobenzene; chloroform; 1,1-dichloroethane; 1,2-dichloroethane; 1,1-dichloroethylene; cis-1,2-dichloroethylene; methylene chloride; 1,1,2,2-tetrachloroethane; tetrachloroethylene; 1,1,1-trichloroethane; 1,1,2-trichloroethane; trichloroethylene; 1,1,2-trichloro-1,2,2-trifluoroethane)	Halogenated Organics	17
Heel (e.g., ash heel; soot heel; firebrick heel; sand, slag, and crucible heel)	Other Inorganics (non-reactive)	0
Hydrocarbons, aliphatic (e.g., cyclohexane, n-paraffin hydrocarbons)	Hydrocarbon, aliphatic, unsaturated	28
Hydrocarbons, aliphatic (e.g., cyclohexane, n-paraffin hydrocarbons)	Hydrocarbon, aliphatic, saturated	29
Hydrocarbons, aromatic (e.g., benzene; ethyl benzene; toluene; 1,2,4-trimethylbenzene; 1,3,5-trimethylbenzene; xylene)	Hydrocarbons, aromatic	16
Insulation, inorganic	Other Inorganics (non-reactive)	0
Insulation, organic	Combustible and flammable materials, miscellaneous	101
Ketones (e.g., acetone, methyl ethyl ketone, methyl isobutyl ketone)	Ketones	19
Leaded rubber (e.g., gloves, aprons, sheet material)	Metals, Other elemental, and alloy, as sheets, rods, moldings, vapors, or sponges	23
Leaded rubber (e.g., gloves, aprons, sheet material)	Metals and metal compounds, toxic	24
Leaded rubber (e.g., gloves, aprons, sheet material)	Combustible and flammable materials, miscellaneous	101
Leather	Combustible and flammable materials, miscellaneous	101
Magnesia cement (e.g., Ramcote® cement)	Water reactive substance	107

Lists of Allowable Materials and Associated Reactivity Groups		
Allowable Chemical/Material[a]	**Reactivity Group[b]**	
	Name	**Number[c]**
Magnesium alloy	Metals, Other elemental, and alloy, as sheets, rods, moldings, vapors, or sponges	23
Metal hydroxides	Other Inorganics (non-reactive)	0
Metal oxides (e.g., slag)	Other Inorganics (non-reactive)	0
Metals (e.g., aluminum, cadmium, copper, steel, tantalum, tungsten, zinc)	Metals, alkali and alkaline earth, elemental	21
Metals (e.g., aluminum, cadmium, copper, steel, tantalum, tungsten, zinc)	Metals, Other elemental and alloy in the form of powders, vapors, or sponges	22
Metals (e.g., aluminum, cadmium, copper, steel, tantalum, tungsten, zinc)	Metals, Other elemental, and alloy, as sheets, rods, moldings, vapors, or sponges	23
Metals (e.g., aluminum, cadmium, copper, steel, tantalum, tungsten, zinc)	Metals and metal compounds, toxic	24
Metals (e.g., aluminum, cadmium, copper, steel, tantalum, tungsten, zinc)	Reducing agents, strong	105
Nitrates (e.g., ammonium nitrate, sodium nitrate)	Oxidizing Agents, Strong	104
Oil (e.g., petroleum, mineral)	Combustible and flammable materials, miscellaneous	101
Organophosphates (e.g., tributyl phosphate, dibutyl phosphate, monobutyl phosphite)	Organophosphates, phosphothioates, and phosphodithioates	32
Paint, dry (e.g., floor/wall paint, ALARA)	Combustible and flammable materials, miscellaneous	101
Petroset® products (for aqueous solutions)	Other solidification materials and absorbents/adsorbents	0
Plastics [e.g., polycarbonate, polyethylene, polymethyl methacrylate (Plexiglas®, Lucite®), polysulfone, polytetrafluoroethylene (Teflon®), polyvinyl acetate, polyvinyl chloride (PVC), polyvinylidene chloride (saran)]	Combustible and flammable materials, miscellaneous	101
Polyamides (nylon)	Amides	6
Polyamides (nylon)	Combustible and flammable materials, miscellaneous	101
Polychlorotrifluoroethylene (e.g., Kel-F®)	Combustible and flammable materials, miscellaneous	101
Polyesters (e.g., Dacron®, Mylar®)	Esters	13
Polyesters (e.g., Dacron®, Mylar®)	Combustible and flammable materials, miscellaneous	101
Polyethylene glycol (e.g., Carbowax®)	Alcohols and Glycols	4
Polyethylene glycol (e.g., Carbowax®)	Combustible and flammable materials, miscellaneous	101
Polyimides	Hydrocarbons, aromatic	16
Polyphenyl methacrylate	Combustible and flammable materials, miscellaneous	101

Lists of Allowable Materials and Associated Reactivity Groups		
Allowable Chemical/Material[a]	**Reactivity Group**[b]	
	Name	**Number**[c]
Polypropylene (e.g., Ful-Flo® filters)	Combustible and flammable materials, miscellaneous	101
Polyurethane	Combustible and flammable materials, miscellaneous	101
Polyvinyl alcohol	Alcohols and Glycols	4
Portland cement	Caustics	10
Portland cement	Water reactive substance	107
Resins (e.g., aniline-formaldehyde, melamine-formaldehyde, organic resins, phenol-formaldehyde, phenolic resins, urea-formaldehyde)	Aldehydes	5
Resins (e.g., aniline-formaldehyde, melamine-formaldehyde, organic resins, phenol-formaldehyde, phenolic resins, urea-formaldehyde)	Phenols and Creosols	31
Rubber, natural or synthetic [e.g., chlorosulfonated polyethylene (Hypalon®), ethylene-propylene rubber, EPDM, polybutadiene, polychloroprene (neoprene), polyisobutylene, polyisoprene, polystyrene, rubber hydrochloride (pliofilm®)]	Combustible and flammable materials, miscellaneous	101
Salts (e.g., calcium chloride, calcium fluoride, sodium chloride)	Other Inorganics (non-reactive)	0
Salts (e.g., calcium chloride, calcium fluoride, sodium chloride)	Fluorides, inorganic	15
Sand/soil, inorganic	Other Inorganics (non-reactive)	0
Sand/soil, organic	Combustible and flammable materials, miscellaneous	101
Trioctyl phosphine oxide	Organophosphates, phosphothioates, and phosphodithioates	32
Water	Water and Mixtures containing water	106
Waxes, commercial brands	Combustible and flammable materials, miscellaneous	101
Other inorganic materials	Other Inorganics (non-reactive)	0

[a]Chemicals in ***bold italic*** have been assigned to more than one reactivity group.
[b]Reactivity group from Hatayama, H.K., J. J. Chen, E.R. deVera, R.D. Stephens, and D.L. Storm, "A Method for Determining the Compatibility of Hazardous Wastes," EPA-600/2-80-076, U.S. Environmental Protection Agency, Cincinnati, Ohio, 1980.
[c]Non-reactive inorganic materials or chemicals are assigned a reactivity group number of "0."

Attachment 2.0

Lists of Unique Reactivity Group Numbers in Lists of Allowable Materials

List of Unique Reactivity Group Numbers in Lists of Allowable Materials		
Allowable Chemical/Material[a]	**Reactivity Group[b]**	
	Name	**Number**
Absorbents/adsorbents (e.g., Celite®, diatomaceous earth, diatomite, Florco®, Oil-Dri®, perlite, vermiculite)	Other solidification materials and absorbents/adsorbents	0
Acids, inorganic	Acids, Mineral, Non-oxidizing	1
Acids, inorganic	Acids, Mineral, Oxidizing	2
Acids, solid, organic	Acids, Organic	3
Polyethylene glycol (e.g., Carbowax®)	Alcohols and Glycols	4
Resins (e.g., aniline-formaldehyde, melamine-formaldehyde, organic resins, phenol-formaldehyde, phenolic resins, urea-formaldehyde)	Aldehydes	5
Polyamides (nylon)	Amides	6
Portland cement	Caustics	10
Esters (e.g., ethyl acetate, polyethylene glycol ester)	Esters	13
Ethers (e.g., ethyl ether)	Ethers	14
Salts (e.g., calcium chloride, calcium fluoride, sodium chloride)	Fluorides, inorganic	15
Hydrocarbons, aromatic (e.g., benzene; ethyl benzene; toluene; 1,2,4-trimethylbenzene; 1,3,5-trimethylbenzene; xylene)	Hydrocarbons, aromatic	16
Halogenated organics (e.g., bromoform; carbon tetrachloride; chlorobenzene; chloroform; 1,1-dichloroethane; 1,2-dichloroethane; 1,1-dichloroethylene; cis-1,2-dichloroethylene; methylene chloride; 1,1,2,2-tetrachloroethane; tetrachloroethylene; 1,1,1-trichloroethane; 1,1,2-trichloroethane; trichloroethylene; 1,1,2-trichloro-1,2,2-trifluoroethane)	Halogenated Organics	17
Ketones (e.g., acetone, methyl ethyl ketone, methyl isobutyl ketone)	Ketones	19
Batteries, dry (e.g., flashlight)	Metals, alkali and alkaline earth, elemental and alloys	21
Metals (e.g., aluminum, cadmium, copper, steel, tantalum, tungsten, zinc)	Metals, Other elemental and alloy in the form of powders, vapors, or sponges	22
Metals (e.g., aluminum, cadmium, copper, steel, tantalum, tungsten, zinc)	Metals, Other elemental, and alloy, as sheets, rods, moldings, vapors, or sponges	23
Leaded rubber (e.g., gloves, aprons, sheet material)	Metals and metal compounds, toxic	24
Hydrocarbons, aliphatic (e.g., cyclohexane, n-paraffin hydrocarbons)	Hydrocarbon, aliphatic, unsaturated	28
Hydrocarbons, aliphatic (e.g., cyclohexane, n-paraffin hydrocarbons)	Hydrocarbon, aliphatic, saturated	29

List of Unique Reactivity Group Numbers in Lists of Allowable Materials		
Allowable Chemical/Material[a]	**Reactivity Group**[b]	
	Name	**Number**
Resins (e.g., aniline-formaldehyde, melamine-formaldehyde, organic resins, phenol-formaldehyde, phenolic resins, urea-formaldehyde)	Phenols and Creosols	31
Organophosphates (e.g., tributyl phosphate, dibutyl phosphate, monobutyl phosphite)	Organophosphates, phosphothioates, and phosphodithioates	32
Asphalt	Combustible and flammable materials, miscellaneous	101
Cellulose acetate butyrate	Polymerizable compounds	103
Nitrates (e.g., ammonium nitrate, sodium nitrate)	Oxidizing Agents, Strong	104
Metals (e.g., aluminum, cadmium, copper, steel, tantalum, tungsten, zinc)	Reducing agents, strong	105
Aqueous solutions/water	Water and Mixtures containing water	106
Portland cement	Water reactive substances	107

[a]Chemicals in ***bold italic*** have been assigned to more than one reactivity group.
[b]Reactivity group from Hatayama, H.K., J.J. Chen, E.R. deVera, R.D. Stephens, and D.L. Storm, "A Method for Determining the Compatibility of Hazardous Wastes," EPA-600/2-80-076, U.S. Environmental Protection Agency, Cincinnati, Ohio, 1980.

Attachment 3.0

Waste Chemical Compatibility Chart

Hazardous Waste Chemical Compatibility Chart

Group No.	Reactivity Group Name	1	2	3	4	5	6	10	13	14	15	16	17	19	21	22	23	24	28	29	31	32	101	103	104	105	106	107
1	Acids, Mineral, Non-Oxidizing	1																										
2	Acids, Mineral, Oxidizing		2																									
3	Acids, Organic		G, H	3																								
4	Alcohols and Glycols	H	H, F	H, P	4																							
5	Aldehydes	H, P	H, F	H, P		5																						
6	Amides	H	H, GT				6																					
10	Caustics	H	H	H		H		10																				
13	Esters	H	H, F					H	13																			
14	Ethers	H	H, F							14																		
15	Fluorides, Inorganic	GT	GT	GT							15																	
16	Hydrocarbons, Aromatic		H, F									16																
17	Halogenated Organics	H, GT	H, GT, P					H, GF					17															
19	Ketones	H	H, F					H						19														
21	Metals, Alkali and Alkaline Earth, Elemental	GF, H, F	GF, H, F	GF, H, F	GF, H, F	GF, H, F	GF, H	GF, H	GF, H						21													
22	Metals, Other Elemental Alloys as Powders, Vapors, or Sponges	GF, H, F	GF, H, F	GF				GF, H					H, E			22												
23	Metals, Other Elemental Alloys as Sheets, Rods, Moldings, Etc.	GF, H, F	GF, H, F										H, F				23											
24	Metals and Metal Compounds, Toxic	S	S	S			S	S										24										
28	Hydrocarbons, Aliphatic, Unsaturated	H	H, F			H										H, E			28									
29	Hydrocarbons, Aliphatic, Saturated		H, F																	29								
31	Phenols and Cresols	H	H, F												GF, H						31							
32	Organophosphates,Phosphothioates, Phosphodithioates	GT, H	GT, H					H, E							H							32						
101	Combustible and Flammable Materials, Miscellaneous	H, G	GT, H, F												H, G, F								101					
103	Polymerizable Compounds	P, H	P, H	P, H				P, H							P, H	P, H	P, H	P, H			P, H			103				
104	Oxidizing Agents, Strong	GT, H		GT, H	H, F	H, F	GT, H, F		H, F	H, F		H, F	GT, H	H, F	H, F, E	H, F, E	H, F		H, F	H, F	H, F	GT, H, F	H, G, F	GT, H, F	104			
105	Reducing Agents, Strong	GF, H	GT, H, F	GF, H	GF, H, F	GF, H, F	GF, H		H, F				H, E	GF, H							Gf, H	GF, GT	GF, H	GF, H, P	H, F, E	105		
106	Water and Mixtures Containing Water	H	H												GF, H	GF, H		S								GF, GT	106	
107	Water Reactive Substances	**E**	**X**	**T**	**R**	**E**	**M**		**A**	**C**	**T**	**I**	**V**	**!**	**D**	**O**		**N**	**M**	**I**	**!**	**!**						107
Reactivity Group No.		1	2	3	4	5	6	10	13	14	15	16	17	19	21	22	23	24	28	29	31	32	101	103	104	105	106	107

Reactivity Code	Consequence
E	Explosion
F	Fire
G	Innocuous and Non-Flammable Gas Generation
GF	Flammable Gas Generation
GT	Toxic Gas Generation
H	Heat Generation
P	Violent Polymerazation
S	Solubilization of Toxic Substance

Source: Hatayama, H.K.,J.J. Chen, E.R. deVera, R.D. Stephens, and D.L.Strom, "A Method for Determining the Compatibility of Hazardous Wastes'" EPA-600/2-80-076, U.S. Environmental Protection Agency, Cincinnati, Ohio, 1980

Attachment 4.0

Potential Chemical Incompatibilities

Potential Chemical Incompatibilities			
Combination of Reactivity Groups		**Reaction Result (A x B)**	**Explanation of Potential Incompatibility**
Group A	**Group B**		
1	4	Heat Generation	Reaction will not occur – Acids are neutralized and solidified/immobilized prior to shipping
1	5	Heat Generation	Reaction will not occur – Acids are neutralized and solidified/immobilized prior to shipping
1	5	Violent Polymerization	Reaction will not occur – Acids are neutralized and solidified/immobilized prior to shipping
1	6	Heat Generation	Reaction will not occur – Acids are neutralized and solidified/immobilized prior to shipping
1	10	Heat Generation	Reaction will not occur – Acids are neutralized and solidified/immobilized prior to shipping; Bases/caustic materials are neutralized and solidified/immobilized prior to shipping
1	13	Heat Generation	Reaction will not occur – Acids are neutralized and solidified/immobilized prior to shipping
1	14	Heat Generation	Reaction will not occur – Acids are neutralized and solidified/immobilized prior to shipping
1	15	Toxic Gas Generation	Reaction will not occur – Acids are neutralized and solidified/immobilized prior to shipping
1	17	Heat Generation	Reaction will not occur – Acids are neutralized and solidified/immobilized prior to shipping
1	17	Toxic Gas Generation	Reaction will not occur – Acids are neutralized and solidified/immobilized prior to shipping
1	19	Heat Generation	Reaction will not occur – Acids are neutralized and solidified/immobilized prior to shipping
1	21	Flammable Gas Generation	Reaction will not occur – Acids are neutralized and solidified/immobilized prior to shipping
1	21	Heat Generation	Reaction will not occur – Acids are neutralized and solidified/immobilized prior to shipping
1	21	Fire	Reaction will not occur – Acids are neutralized and solidified/immobilized prior to shipping
1	22	Flammable Gas Generation	Reaction will not occur – Acids are neutralized and solidified/immobilized prior to shipping
1	22	Heat Generation	Reaction will not occur – Acids are neutralized and solidified/immobilized prior to shipping
1	22	Fire	Reaction will not occur – Acids are neutralized and solidified/immobilized prior to shipping
1	23	Flammable Gas Generation	Reaction will not occur – Acids are neutralized and solidified/immobilized prior to shipping
1	23	Heat Generation	Reaction will not occur – Acids are neutralized and solidified/immobilized prior to shipping
1	23	Fire	Reaction will not occur – Acids are neutralized and solidified/immobilized prior to shipping
1	24	Solubilization of Toxic Substances	Reaction will not occur – Acids are neutralized and solidified/immobilized prior to shipping Additionally, any solubilization of toxic substances

Potential Chemical Incompatibilities			
Combination of Reactivity Groups		**Reaction Result (A x B)**	**Explanation of Potential Incompatibility**
Group A	**Group B**		
			will not affect transportation of wastes.
1	28	Heat Generation	Reaction will not occur – Acids are neutralized and solidified/immobilized prior to shipping
1	31	Heat Generation	Reaction will not occur – Acids are neutralized and solidified/immobilized prior to shipping
1	32	Heat Generation	Reaction will not occur – Acids are neutralized and solidified/immobilized prior to shipping
1	32	Toxic Gas Generation	Reaction will not occur – Acids are neutralized and solidified/immobilized prior to shipping
1	101	Heat Generation	Reaction will not occur – Acids are neutralized and solidified/immobilized prior to shipping
1	101	Innocuous and Non-Flammable Gas Generation	Reaction will not occur – Acids are neutralized and solidified/immobilized prior to shipping
1	103	Violent Polymerization	Reaction will not occur – Acids are neutralized and solidified/immobilized prior to shipping
1	103	Heat Generation	Reaction will not occur – Acids are neutralized and solidified/immobilized prior to shipping
1	104	Heat Generation	Reaction will not occur – Acids are neutralized and solidified/immobilized prior to shipping; oxidizing agents are reacted prior to being placed in the waste/shipped.
1	104	Toxic Gas Generation	Reaction will not occur – Acids are neutralized and solidified/immobilized prior to shipping; oxidizing agents are reacted prior to being placed in the waste/shipped.
1	105	Heat Generation	Reaction will not occur – Acids are neutralized and solidified/immobilized prior to shipping; reducing agents are reacted prior to being placed in the waste/shipped.
1	105	Flammable Gas Generation	Reaction will not occur – Acids are neutralized and solidified/immobilized prior to shipping; reducing agents are reacted prior to being placed in the waste/shipped.
1	106	Heat Generation	Reaction will not occur – Acids are neutralized and solidified/immobilized prior to shipping; free liquid content is limited to less than 1% of waste volume
1	107	Highly Reactive	Reaction will not occur – Acids are neutralized and solidified/immobilized prior to shipping; free liquid content is limited to less than 1% of waste volume; water reactive substances are reacted prior to being placed in the waste/shipped. Lime in Portland cement is most common water reactive substance expected in the waste. Portland cement is used as an absorbent and solidification agent for the wastes.

Potential Chemical Incompatibilities			
Combination of Reactivity Groups		Reaction Result (A x B)	Explanation of Potential Incompatibility
Group A	Group B		
2	3	Innocuous and Non-Flammable Gas Generation	Reaction will not occur – Acids are neutralized and solidified/immobilized prior to shipping
2	3	Heat Generation	Reaction will not occur – Acids are neutralized and solidified/immobilized prior to shipping
2	4	Heat Generation	Reaction will not occur – Acids are neutralized and solidified/immobilized prior to shipping
2	4	Fire	Reaction will not occur – Acids are neutralized and solidified/immobilized prior to shipping
2	5	Heat Generation	Reaction will not occur – Acids are neutralized and solidified/immobilized prior to shipping
2	5	Fire	Reaction will not occur – Acids are neutralized and solidified/immobilized prior to shipping
2	6	Heat Generation	Reaction will not occur – Acids are neutralized and solidified/immobilized prior to shipping
2	6	Toxic Gas Generation	Reaction will not occur – Acids are neutralized and solidified/immobilized prior to shipping
2	10	Heat Generation	Reaction will not occur – Acids are neutralized and solidified/immobilized prior to shipping; Bases/caustic materials are neutralized and solidified/immobilized prior to shipping
2	13	Heat Generation	Reaction will not occur – Acids are neutralized and solidified/immobilized prior to shipping
2	13	Fire	Reaction will not occur – Acids are neutralized and solidified/immobilized prior to shipping
2	14	Heat Generation	Reaction will not occur – Acids are neutralized and solidified/immobilized prior to shipping
2	14	Fire	Reaction will not occur – Acids are neutralized and solidified/immobilized prior to shipping
2	15	Toxic Gas Generation	Reaction will not occur – Acids are neutralized and solidified/immobilized prior to shipping
2	16	Heat Generation	Reaction will not occur – Acids are neutralized and solidified/immobilized prior to shipping
2	16	Fire	Reaction will not occur – Acids are neutralized and solidified/immobilized prior to shipping
2	17	Heat Generation	Reaction will not occur – Acids are neutralized and solidified/immobilized prior to shipping
2	17	Fire	Reaction will not occur – Acids are neutralized and solidified/immobilized prior to shipping
2	17	Toxic Gas Generation	Reaction will not occur – Acids are neutralized and solidified/immobilized prior to shipping
2	19	Heat Generation	Reaction will not occur – Acids are neutralized and solidified/immobilized prior to shipping
2	19	Fire	Reaction will not occur – Acids are neutralized and

Potential Chemical Incompatibilities			
Combination of Reactivity Groups		Reaction Result (A x B)	Explanation of Potential Incompatibility
Group A	Group B		
			solidified/immobilized prior to shipping
2	21	Flammable Gas Generation	Reaction will not occur – Acids are neutralized and solidified/immobilized prior to shipping
2	21	Heat Generation	Reaction will not occur – Acids are neutralized and solidified/immobilized prior to shipping
2	21	Fire	Reaction will not occur – Acids are neutralized and solidified/immobilized prior to shipping
2	22	Flammable Gas Generation	Reaction will not occur – Acids are neutralized and solidified/immobilized prior to shipping
2	22	Heat Generation	Reaction will not occur – Acids are neutralized and solidified/immobilized prior to shipping
2	22	Fire	Reaction will not occur – Acids are neutralized and solidified/immobilized prior to shipping
2	23	Flammable Gas Generation	Reaction will not occur – Acids are neutralized and solidified/immobilized prior to shipping
2	23	Heat Generation	Reaction will not occur – Acids are neutralized and solidified/immobilized prior to shipping
2	23	Fire	Reaction will not occur – Acids are neutralized and solidified/immobilized prior to shipping
2	24	Solubilization of Toxic Substances	Reaction will not occur – Acids are neutralized and solidified/immobilized prior to shipping Additionally, any solubilization of toxic substances will not affect transportation of wastes.
2	28	Heat Generation	Reaction will not occur – Acids are neutralized and solidified/immobilized prior to shipping
2	28	Fire	Reaction will not occur – Acids are neutralized and solidified/immobilized prior to shipping
2	29	Heat Generation	Reaction will not occur – Acids are neutralized and solidified/immobilized prior to shipping
2	29	Fire	Reaction will not occur – Acids are neutralized and solidified/immobilized prior to shipping
2	31	Heat Generation	Reaction will not occur – Acids are neutralized and solidified/immobilized prior to shipping
2	31	Fire	Reaction will not occur – Acids are neutralized and solidified/immobilized prior to shipping
2	32	Heat Generation	Reaction will not occur – Acids are neutralized and solidified/immobilized prior to shipping
2	32	Toxic Gas Generation	Reaction will not occur – Acids are neutralized and solidified/immobilized prior to shipping
2	101	Heat Generation	Reaction will not occur – Acids are neutralized and solidified/immobilized prior to shipping
2	101	Fire	Reaction will not occur – Acids are neutralized and solidified/immobilized prior to shipping
2	101	Toxic Gas Generation	Reaction will not occur – Acids are neutralized and solidified/immobilized prior to shipping

Potential Chemical Incompatibilities			
Combination of Reactivity Groups		**Reaction Result (A x B)**	**Explanation of Potential Incompatibility**
Group A	**Group B**		
2	103	Violent Polymerization	Reaction will not occur – Acids are neutralized and solidified/immobilized prior to shipping
2	103	Heat Generation	Reaction will not occur – Acids are neutralized and solidified/immobilized prior to shipping
2	105	Heat Generation	Reaction will not occur – Acids are neutralized and solidified/immobilized prior to shipping; reducing agents are reacted prior to being placed in the waste/shipped.
2	105	Fire	Reaction will not occur – Acids are neutralized and solidified/immobilized prior to shipping; reducing agents are reacted prior to being placed in the waste/shipped.
2	105	Toxic Gas Generation	Reaction will not occur – Acids are neutralized and solidified/immobilized prior to shipping; reducing agents are reacted prior to being placed in the waste/shipped.
2	106	Heat Generation	Reaction will not occur – Acids are neutralized and solidified/immobilized prior to shipping; free liquid content is limited to less than 1% of waste volume
2	107	Highly Reactive	Reaction will not occur – Acids are neutralized and solidified/immobilized prior to shipping; free liquid content is limited to less than 1% of waste volume; water reactive substances are reacted prior to being placed in the waste/shipped. Lime in Portland cement is most common water reactive substance expected in the waste. Portland cement is used as an absorbent and solidification agent for the wastes.
3	4	Heat Generation	Reaction will not occur – Acids are neutralized and solidified/immobilized prior to shipping
3	4	Violent Polymerization	Reaction will not occur – Acids are neutralized and solidified/immobilized prior to shipping
3	5	Heat Generation	Reaction will not occur – Acids are neutralized and solidified/immobilized prior to shipping
3	5	Violent Polymerization	Reaction will not occur – Acids are neutralized and solidified/immobilized prior to shipping
3	10	Heat Generation	Reaction will not occur – Acids are neutralized and solidified/immobilized prior to shipping; Bases/caustic materials are neutralized and solidified/immobilized prior to shipping
3	15	Toxic Gas Generation	Reaction will not occur – Acids are neutralized and solidified/immobilized prior to shipping
3	21	Flammable Gas Generation	Reaction will not occur – Acids are neutralized and solidified/immobilized prior to shipping
3	21	Heat Generation	Reaction will not occur – Acids are neutralized and

Potential Chemical Incompatibilities			
Combination of Reactivity Groups		Reaction Result (A x B)	Explanation of Potential Incompatibility
Group A	Group B		
			solidified/immobilized prior to shipping
3	21	Fire	Reaction will not occur – Acids are neutralized and solidified/immobilized prior to shipping
3	22	Flammable Gas Generation	Reaction will not occur – Acids are neutralized and solidified/immobilized prior to shipping
3	24	Solubilization of Toxic Substances	Reaction will not occur – Acids are neutralized and solidified/immobilized prior to shipping Additionally, any solubilization of toxic substances will not affect transportation of wastes.
3	103	Violent Polymerization	Reaction will not occur – Acids are neutralized and solidified/immobilized prior to shipping
3	103	Heat Generation	Reaction will not occur – Acids are neutralized and solidified/immobilized prior to shipping
3	104	Heat Generation	Reaction will not occur – Acids are neutralized and solidified/immobilized prior to shipping; oxidizing agents are reacted prior to being placed in the waste/shipped.
3	104	Toxic Gas Generation	Reaction will not occur – Acids are neutralized and solidified/immobilized prior to shipping; oxidizing agents are reacted prior to being placed in the waste/shipped.
3	105	Heat Generation	Reaction will not occur – Acids are neutralized and solidified/immobilized prior to shipping; reducing agents are reacted prior to being placed in the waste/shipped.
3	105	Flammable Gas Generation	Reaction will not occur – Acids are neutralized and solidified/immobilized prior to shipping; reducing agents are reacted prior to being placed in the waste/shipped.
3	107	Highly Reactive	Reaction will not occur – Acids are neutralized and solidified/immobilized prior to shipping; free liquid content is limited to less than 1% of waste volume; water reactive substances are reacted prior to being placed in the waste/shipped. Lime in Portland cement is most common water reactive substance expected in the waste. Portland cement is used as an absorbent and solidification agent for the wastes.
4	21	Flammable Gas Generation	Reaction will not occur – Alcohols and Glycols are solidified/immobilized prior to shipping
4	21	Heat Generation	Reaction will not occur – Alcohols and Glycols are solidified/immobilized prior to shipping
4	21	Fire	Reaction will not occur – Alcohols and Glycols are solidified/immobilized prior to shipping
4	104	Heat Generation	Reaction will not occur – Alcohols and Glycols are

Potential Chemical Incompatibilities			
Combination of Reactivity Groups		Reaction Result (A x B)	Explanation of Potential Incompatibility
Group A	Group B		
			solidified/immobilized prior to shipping; oxidizing agents are reacted prior to being placed in the waste/shipped.
4	104	Fire	Reaction will not occur – Alcohols and Glycols are solidified/immobilized prior to shipping; oxidizing agents are reacted prior to being placed in the waste/shipped.
4	105	Heat Generation	Reaction will not occur – Alcohols and Glycols are solidified/immobilized prior to shipping; reducing agents are reacted prior to being placed in the waste/shipped.
4	105	Flammable Gas Generation	Reaction will not occur – Alcohols and Glycols are solidified/immobilized prior to shipping; reducing agents are reacted prior to being placed in the waste/shipped.
4	105	Fire	Reaction will not occur – Alcohols and Glycols are solidified/immobilized prior to shipping; reducing agents are reacted prior to being placed in the waste/shipped.
4	107	Highly Reactive	Reaction will not occur – Alcohols and Glycols are solidified/immobilized prior to shipping; free liquid content is limited to less than 1% of waste volume; water reactive substances are reacted prior to being placed in the waste/shipped. Lime in Portland cement is most common water reactive substance expected in the waste. Portland cement is used as an absorbent and solidification agent for the wastes.
5	10	Heat Generation	Reaction will not occur – Aldehydes are solidified/immobilized prior to shipping; bases/caustic materials are neutralized and solidified/immobilized prior to shipping
5	21	Flammable Gas Generation	Reaction will not occur – Aldehydes are solidified/immobilized prior to shipping
5	21	Heat Generation	Reaction will not occur – Aldehydes are solidified/immobilized prior to shipping
5	21	Fire	Reaction will not occur – Aldehydes are solidified/immobilized prior to shipping
5	28	Heat Generation	Reaction will not occur – Aldehydes are solidified/immobilized prior to shipping
5	104	Heat Generation	Reaction will not occur – Aldehydes are solidified/immobilized prior to shipping; oxidizing agents are reacted prior to being placed in the waste/shipped.
5	104	Fire	Reaction will not occur – Aldehydes are

Potential Chemical Incompatibilities			
Combination of Reactivity Groups		**Reaction Result (A x B)**	**Explanation of Potential Incompatibility**
Group A	**Group B**		
			solidified/immobilized prior to shipping; oxidizing agents are reacted prior to being placed in the waste/shipped.
5	105	Heat Generation	Reaction will not occur – Aldehydes are solidified/immobilized prior to shipping; reducing agents are reacted prior to being placed in the waste/shipped.
5	105	Flammable Gas Generation	Reaction will not occur – Aldehydes are solidified/immobilized prior to shipping; reducing agents are reacted prior to being placed in the waste/shipped.
5	105	Fire	Reaction will not occur – Aldehydes are solidified/immobilized prior to shipping; reducing agents are reacted prior to being placed in the waste/shipped.
5	107	Highly Reactive	Reaction will not occur – Aldehydes are solidified/immobilized prior to shipping; free liquid content is limited to less than 1% of waste volume; water reactive substances are reacted prior to being placed in the waste/shipped. Lime in Portland cement is most common water reactive substance expected in the waste. Portland cement is used as an absorbent and solidification agent for the wastes.
6	17	Heat Generation	Reaction will not occur – Amides are solidified/immobilized prior to shipping
6	17	Toxic Gas Generation	Reaction will not occur – Amides are solidified/immobilized prior to shipping
6	21	Flammable Gas Generation	Reaction will not occur – Amides are solidified/immobilized prior to shipping
6	21	Heat Generation	Reaction will not occur – Amides are solidified/immobilized prior to shipping
6	24	Solubilization of Toxic Substances	Reaction will not occur – Amides are solidified/immobilized prior to shipping Additionally, any solubilization of toxic substances will not affect transportation of wastes.
6	104	Heat Generation	Reaction will not occur – Amides are solidified/immobilized prior to shipping; oxidizing agents are reacted prior to being placed in the waste/shipped.
6	104	Fire	Reaction will not occur – Amides are solidified/immobilized prior to shipping; oxidizing agents are reacted prior to being placed in the waste/shipped.

Potential Chemical Incompatibilities			
Combination of Reactivity Groups		**Reaction Result (A x B)**	**Explanation of Potential Incompatibility**
Group A	**Group B**		
6	104	Toxic Gas Generation	Reaction will not occur – Amides are solidified/immobilized prior to shipping; oxidizing agents are reacted prior to being placed in the waste/shipped.
6	105	Heat Generation	Reaction will not occur – Amides are solidified/immobilized prior to shipping; reducing agents are reacted prior to being placed in the waste/shipped.
6	105	Flammable Gas Generation	Reaction will not occur – Amides are solidified/immobilized prior to shipping; reducing agents are reacted prior to being placed in the waste/shipped.
6	107	Highly Reactive	Reaction will not occur – Amides are solidified/immobilized prior to shipping; free liquid content is limited to less than 1% of waste volume; water reactive substances are reacted prior to being placed in the waste/shipped. Lime in Portland cement is most common water reactive substance expected in the waste. Portland cement is used as an absorbent and solidification agent for the wastes.
10	13	Heat Generation	Reaction will not occur – Caustics/bases are neutralized and solidified/immobilized prior to shipping
10	17	Heat Generation	Reaction will not occur – Caustics/bases are neutralized and solidified/immobilized prior to shipping
10	19	Heat Generation	Reaction will not occur – Caustics/bases are neutralized and solidified/immobilized prior to shipping
10	21	Flammable Gas Generation	Reaction will not occur – Caustics/bases are neutralized and solidified/immobilized prior to shipping
10	21	Heat Generation	Reaction will not occur – Caustics/bases are neutralized and solidified/immobilized prior to shipping
10	22	Flammable Gas Generation	Reaction will not occur – Caustics/bases are neutralized and solidified/immobilized prior to shipping
10	22	Heat Generation	Reaction will not occur – Caustics/bases are neutralized and solidified/immobilized prior to shipping
10	23	Flammable Gas Generation	Reaction will not occur – Caustics/bases are neutralized and solidified/immobilized prior to shipping

Potential Chemical Incompatibilities			
Combination of Reactivity Groups		**Reaction Result (A x B)**	**Explanation of Potential Incompatibility**
Group A	**Group B**		
10	23	Heat Generation	Reaction will not occur – Caustics/bases are neutralized and solidified/immobilized prior to shipping
10	24	Solubilization of Toxic Substances	Reaction will not occur – Caustics/bases are neutralized and solidified/immobilized prior to shipping; Additionally, any solubilization of toxic substances will not affect transportation of wastes.
10	32	Heat Generation	Reaction will not occur – Caustics/bases are neutralized and solidified/immobilized prior to shipping
10	32	Explosion	Reaction will not occur – Caustics/bases are neutralized and solidified/immobilized prior to shipping
10	103	Violent Polymerization	Reaction will not occur – Caustics/bases are neutralized and solidified/immobilized prior to shipping
10	103	Heat Generation	Reaction will not occur – Caustics/bases are neutralized and solidified/immobilized prior to shipping
10	107	Highly Reactive	Reaction will not occur – Caustics/bases are neutralized and solidified/immobilized prior to shipping; free liquid content is limited to less than 1% of waste volume; water reactive substances are reacted prior to being placed in the waste/shipped. Lime in Portland cement is most common water reactive substance expected in the waste. Portland cement is used as an absorbent and solidification agent for the wastes.
13	21	Flammable Gas Generation	Reaction will not occur – Esters are solidified/immobilized prior to shipping
13	21	Heat Generation	Reaction will not occur – Esters are solidified/immobilized prior to shipping
13	104	Heat Generation	Reaction will not occur – Esters are solidified/immobilized prior to shipping; oxidizing agents are reacted prior to being placed in the waste/shipped.
13	104	Fire	Reaction will not occur – Esters are solidified/immobilized prior to shipping; oxidizing agents are reacted prior to being placed in the waste/shipped.
13	105	Heat Generation	Reaction will not occur – Esters are solidified/immobilized prior to shipping; reducing agents are reacted prior to being placed in the waste/shipped.

Potential Chemical Incompatibilities			
Combination of Reactivity Groups		Reaction Result	
Group A	Group B	(A x B)	Explanation of Potential Incompatibility
13	105	Fire	Reaction will not occur – Esters are solidified/immobilized prior to shipping; reducing agents are reacted prior to being placed in the waste/shipped.
13	107	Highly Reactive	Reaction will not occur – Esters are solidified/immobilized prior to shipping; free liquid content is limited to less than 1% of waste volume; water reactive substances are reacted prior to being placed in the waste/shipped. Lime in Portland cement is most common water reactive substance expected in the waste. Portland cement is used as an absorbent and solidification agent for the wastes.
14	104	Heat Generation	Reaction will not occur – Ethers are solidified / immobilized prior to shipping. Oxidizing agents are reacted prior to being placed in the waste/shipped.
14	104	Fire	Reaction will not occur – Ethers are solidified / immobilized prior to shipping. Oxidizing agents are reacted prior to being placed in the waste/shipped.
14	107	Highly Reactive	Reaction will not occur – Ethers are solidified / immobilized prior to shipping. Free liquid content is limited to less than 1% of waste volume; water reactive substances are reacted prior to being placed in the waste/shipped. Lime in Portland cement is most common water reactive substance expected in the waste. Portland cement is used as an absorbent and solidification agent for the wastes.
15	107	Highly Reactive	Reaction will not occur – Salts are reacted during use and processing; Free liquid content is limited to less than 1% of waste volume; water reactive substances are reacted prior to being placed in the waste/shipped. Lime in Portland cement is most common water reactive substance expected in the waste. Portland cement is used as an absorbent and solidification agent for the wastes.
16	104	Heat Generation	Reaction will not occur – Aromatic hydrocarbons are solidified/immobilized prior to shipping. Oxidizing agents are reacted prior to being placed in the waste/shipped.
16	104	Fire	Reaction will not occur – Aromatic hydrocarbons are solidified/immobilized prior to shipping. Oxidizing agents are reacted prior to being placed in the waste/shipped.

Potential Chemical Incompatibilities			
Combination of Reactivity Groups		**Reaction Result (A x B)**	**Explanation of Potential Incompatibility**
Group A	**Group B**		
16	107	Highly Reactive	Reaction will not occur – Aromatic hydrocarbons are solidified/immobilized prior to shipping. Free liquid content is limited to less than 1% of waste volume; water reactive substances are reacted prior to being placed in the waste/shipped. Lime in Portland cement is most common water reactive substance expected in the waste. Portland cement is used as an absorbent and solidification agent for the wastes.
17	21	Heat Generation	Reaction will not occur – Halogenated organics are solidified/immobilized prior to shipping
17	21	Explosion	Reaction will not occur – Halogenated organics are solidified/immobilized prior to shipping
17	22	Heat Generation	Reaction will not occur – Halogenated organics are solidified/immobilized prior to shipping
17	22	Explosion	Reaction will not occur – Halogenated organics are solidified/immobilized prior to shipping
17	23	Heat Generation	Reaction will not occur – Halogenated organics are solidified/immobilized prior to shipping
17	23	Fire	Reaction will not occur – Halogenated organics are solidified/immobilized prior to shipping
17	104	Heat Generation	Reaction will not occur – Halogenated organics are solidified/immobilized prior to shipping; oxidizing agents are reacted prior to being placed in the waste/shipped.
17	104	Toxic Gas Generation	Reaction will not occur – Halogenated organics are solidified/immobilized prior to shipping; oxidizing agents are reacted prior to being placed in the waste/shipped.
17	105	Heat Generation	Reaction will not occur – Halogenated organics are solidified/immobilized prior to shipping; reducing agents are reacted prior to being placed in the waste/shipped.
17	105	Explosion	Reaction will not occur – Halogenated organics are solidified/immobilized prior to shipping; reducing agents are reacted prior to being placed in the waste/shipped.

Potential Chemical Incompatibilities			
Combination of Reactivity Groups		Reaction Result	
Group A	Group B	(A x B)	Explanation of Potential Incompatibility
17	107	Highly Reactive	Reaction will not occur – Halogenated organics are solidified/immobilized prior to shipping; free liquid content is limited to less than 1% of waste volume; water reactive substances are reacted prior to being placed in the waste/shipped. Lime in Portland cement is most common water reactive substance expected in the waste. Portland cement is used as an absorbent and solidification agent for the wastes.
19	21	Flammable Gas Generation	Reaction will not occur – Ketones are solidified/immobilized prior to shipping
19	21	Heat Generation	Reaction will not occur – Ketones are solidified/immobilized prior to shipping
19	104	Heat Generation	Reaction will not occur –Ketones are solidified/immobilized prior to shipping; oxidizing agents are reacted prior to being placed in the waste/shipped.
19	104	Fire	Reaction will not occur –Ketones are solidified/immobilized prior to shipping; oxidizing agents are reacted prior to being placed in the waste/shipped.
19	105	Flammable Gas Generation	Reaction will not occur –Ketones are solidified/immobilized prior to shipping; reducing agents are reacted prior to being placed in the waste/shipped.
19	105	Heat Generation	Reaction will not occur –Ketones are solidified/immobilized prior to shipping; reducing agents are reacted prior to being placed in the waste/shipped.
19	107	Highly Reactive	Reaction will not occur – Ketones are solidified/immobilized prior to shipping; free liquid content is limited to less than 1% of waste volume; water reactive substances are reacted prior to being placed in the waste/shipped. Lime in Portland cement is most common water reactive substance expected in the waste. Portland cement is used as an absorbent and solidification agent for the wastes.
21	31	Flammable Gas Generation	Reaction will not occur – Phenols and Creosols are solidified/immobilized prior to shipping; metals are typically in oxide form
21	31	Heat Generation	Reaction will not occur – Phenols and Creosols are solidified/immobilized prior to shipping; metals are typically in oxide form
21	32	Heat Generation	Reaction will not occur – Organophosphates are

Potential Chemical Incompatibilities			
Combination of Reactivity Groups		**Reaction Result (A x B)**	**Explanation of Potential Incompatibility**
Group A	**Group B**		
			solidified/immobilized prior to shipping; metals are typically in oxide form
21	101	Heat Generation	Reaction will not occur – Combustible materials are dry; free liquid content is limited to less than 1% of waste volume; metals are typically in oxide form
21	101	Innocuous and Non-Flammable Gas Generation	Reaction will not occur – Combustible materials are dry; free liquid content is limited to less than 1% of waste volume; metals are typically in oxide form
21	101	Fire	Reaction will not occur – Combustible materials are dry; free liquid content is limited to less than 1% of waste volume; metals are typically in oxide form
21	103	Violent Polymerization	Reaction will not occur – Polymerizable compounds are reacted or immobilized/solidified prior to shipping; metals are typically in oxide form
21	103	Heat Generation	Reaction will not occur – Polymerizable compounds are reacted or immobilized/solidified prior to shipping; metals are typically in oxide form
21	104	Heat Generation	Reaction will not occur –Oxidizing agents are reacted prior to being placed in the waste/shipped; metals are typically in oxide form
21	104	Fire	Reaction will not occur –Oxidizing agents are reacted prior to being placed in the waste/shipped; metals are typically in oxide form
21	104	Explosion	Reaction will not occur –Oxidizing agents are reacted prior to being placed in the waste/shipped; metals are typically in oxide form
21	106	Flammable Gas Generation	Reaction will not occur – Free liquids are limited to less than 1% of waste volume; metals are typically in oxide form.
21	106	Heat Generation	Reaction will not occur – Free liquids are limited to less than 1% of waste volume; metals are typically in oxide form.
21	107	Highly Reactive	Reaction will not occur – Metals are typically in oxide form; water reactive substances are reacted prior to being placed in the waste/shipped. Lime in Portland cement is most common water reactive substance expected in the waste. Portland cement is used as an absorbent and solidification agent for the wastes.
22	28	Heat Generation	Reaction will not occur – Unsaturated aliphatic hydrocarbons are solidified/immobilized prior to shipping
22	28	Explosion	Reaction will not occur – Unsaturated aliphatic hydrocarbons are solidified/immobilized prior to shipping

Potential Chemical Incompatibilities			
Combination of Reactivity Groups		**Reaction Result (A x B)**	**Explanation of Potential Incompatibility**
Group A	**Group B**		
22	103	Violent Polymerization	Reaction will not occur – Polymerizable compounds are reacted or immobilized/solidified prior to shipping
22	103	Heat Generation	Reaction will not occur – Polymerizable compounds are reacted or immobilized/solidified prior to shipping
22	104	Heat Generation	Reaction will not occur – Oxidizing agents are reacted prior to being placed in the waste/shipped
22	104	Fire	Reaction will not occur – Oxidizing agents are reacted prior to being placed in the waste/shipped
22	104	Explosion	Reaction will not occur – Oxidizing agents are reacted prior to being placed in the waste/shipped
22	106	Flammable Gas Generation	Reaction will not occur – Free liquids are limited to less than 1% of waste volume; water reactive metals are reacted prior to shipping
22	106	Heat Generation	Reaction will not occur – Free liquids are limited to less than 1% of waste volume; water reactive metals are reacted prior to shipping
22	107	Highly Reactive	Reaction will not occur –Water reactive substances are reacted prior to being placed in the waste/shipped. Lime in Portland cement is most common water reactive substance expected in the waste. Portland cement is used as an absorbent and solidification agent for the wastes.
23	103	Violent Polymerization	Reaction will not occur – Polymerizable compounds are reacted or immobilized/solidified prior to shipping
23	103	Heat Generation	Reaction will not occur – Polymerizable compounds are reacted or immobilized/solidified prior to shipping
23	104	Heat Generation	Reaction will not occur – Oxidizing agents are reacted prior to being placed in the waste/shipped
23	104	Fire	Reaction will not occur – Oxidizing agents are reacted prior to being placed in the waste/shipped
23	107	Highly Reactive	Reaction will not occur –Water reactive substances are reacted prior to being placed in the waste/shipped. Lime in Portland cement is most common water reactive substance expected in the waste. Portland cement is used as an absorbent and solidification agent for the wastes.
24	103	Violent Polymerization	Reaction will not occur – Polymerizable compounds are reacted or immobilized/solidified prior to shipping
24	103	Heat Generation	Reaction will not occur – Polymerizable compounds are reacted or immobilized/solidified prior to shipping
24	106	Solubilization of Toxic Substances	Reaction will not occur – Free liquid content is limited to less than 1% of waste volume; Additionally, any solubilization of toxic substances will not affect

Potential Chemical Incompatibilities			
Combination of Reactivity Groups		Reaction Result (A x B)	Explanation of Potential Incompatibility
Group A	Group B		
			transportation of wastes.
24	107	Highly Reactive	Reaction will not occur – Water reactive substances are reacted prior to being placed in the waste/shipped. Lime in Portland cement is most common water reactive substance expected in the waste. Portland cement is used as an absorbent and solidification agent for the wastes.
28	104	Heat Generation	Reaction will not occur – Unsaturated aliphatic hydrocarbons are immobilized/solidified prior to shipping; oxidizing agents are reacted prior to being placed in the waste/shipped
28	104	Fire	Reaction will not occur – Unsaturated aliphatic hydrocarbons are immobilized/solidified prior to shipping; oxidizing agents are reacted prior to being placed in the waste/shipped
28	107	Highly Reactive	Reaction will not occur – Unsaturated aliphatic hydrocarbons are immobilized/solidified prior to shipping; free liquid content is limited to less than 1% of waste volume; water reactive substances are reacted prior to being placed in the waste/shipped. Lime in Portland cement is most common water reactive substance expected in the waste. Portland cement is used as an absorbent and solidification agent for the wastes.
29	104	Heat Generation	Reaction will not occur – Saturated aliphatic hydrocarbons are immobilized/solidified prior to shipping; oxidizing agents are reacted prior to being placed in the waste/shipped
29	104	Fire	Reaction will not occur – Saturated aliphatic hydrocarbons are immobilized/solidified prior to shipping; oxidizing agents are reacted prior to being placed in the waste/shipped
29	107	Highly Reactive	Reaction will not occur – Saturated aliphatic hydrocarbons are immobilized/solidified prior to shipping; free liquid content is limited to less than 1% of waste volume; water reactive substances are reacted prior to being placed in the waste/shipped. Lime in Portland cement is most common water reactive substance expected in the waste. Portland cement is used as an absorbent and solidification agent for the wastes.
31	103	Violent	Reaction will not occur – Polymerizable compounds

Potential Chemical Incompatibilities			
Combination of Reactivity Groups		Reaction Result (A x B)	Explanation of Potential Incompatibility
Group A	Group B		
		Polymerization	are reacted or immobilized/solidified prior to shipping; phenols and creosols are immobilized/solidified prior to shipping
31	103	Heat Generation	Reaction will not occur – Polymerizable compounds are reacted or immobilized/solidified prior to shipping; phenols and creosols are immobilized/solidified prior to shipping
31	104	Heat Generation	Reaction will not occur – Phenols and creosols are immobilized/solidified prior to shipping; oxidizing agents are reacted prior to being placed in the waste/shipped
31	104	Fire	Reaction will not occur – Phenols and creosols are immobilized/solidified prior to shipping; oxidizing agents are reacted prior to being placed in the waste/shipped
31	105	Flammable Gas Generation	Reaction will not occur – Phenols and creosols are immobilized/solidified prior to shipping; reducing agents are reacted prior to being placed in the waste/shipped
31	105	Heat Generation	Reaction will not occur – Phenols and creosols are immobilized/solidified prior to shipping; reducing agents are reacted prior to being placed in the waste/shipped
31	107	Highly Reactive	Reaction will not occur – Phenols and creosols are immobilized/solidified prior to shipping; free liquid content is limited to less than 1% of waste volume; water reactive substances are reacted prior to being placed in the waste/shipped. Lime in Portland cement is most common water reactive substance expected in the waste. Portland cement is used as an absorbent and solidification agent for the wastes.
32	104	Heat Generation	Reaction will not occur – Organophosphates are immobilized/solidified prior to shipping; oxidizing agents are reacted prior to being placed in the waste/shipped
32	104	Fire	Reaction will not occur – Organophosphates are immobilized/solidified prior to shipping; oxidizing agents are reacted prior to being placed in the waste/shipped
32	104	Toxic Gas Generation	Reaction will not occur – Organophosphates are immobilized/solidified prior to shipping; oxidizing agents are reacted prior to being placed in the waste/shipped
32	105	Toxic Gas	Reaction will not occur – Organophosphates are

Potential Chemical Incompatibilities			
Combination of Reactivity Groups		Reaction Result (A x B)	Explanation of Potential Incompatibility
Group A	Group B		
		Generation	immobilized/solidified prior to shipping; reducing agents are reacted prior to being placed in the waste/shipped
32	105	Flammable Gas Generation	Reaction will not occur – Organophosphates are immobilized/solidified prior to shipping; reducing agents are reacted prior to being placed in the waste/shipped
32	105	Heat Generation	Reaction will not occur – Organophosphates are immobilized/solidified prior to shipping; reducing agents are reacted prior to being placed in the waste/shipped
32	107	Highly Reactive	Reaction will not occur – Organophosphates are immobilized/solidified prior to shipping; free liquid content is limited to less than 1% of waste volume; water reactive substances are reacted prior to being placed in the waste/shipped. Lime in Portland cement is most common water reactive substance expected in the waste. Portland cement is used as an absorbent and solidification agent for the wastes.
101	104	Heat Generation	Reaction will not occur – Combustible materials are dry; oxidizing agents are reacted prior to being placed in the waste/shipped
101	104	Fire	Reaction will not occur – Combustible materials are dry; oxidizing agents are reacted prior to being placed in the waste/shipped
101	104	Innocuous and Non-Flammable Gas Generation	Reaction will not occur – Combustible materials are dry; oxidizing agents are reacted prior to being placed in the waste/shipped
101	105	Flammable Gas Generation	Reaction will not occur – Combustible materials are dry; reducing agents are reacted prior to being placed in the waste/shipped
101	105	Heat Generation	Reaction will not occur – Combustible materials are dry; reducing agents are reacted prior to being placed in the waste/shipped
101	107	Highly Reactive	Reaction will not occur – Combustible materials are dry; free liquid content is limited to less than 1% of waste volume; water reactive substances are reacted prior to being placed in the waste/shipped. Lime in Portland cement is most common water reactive substance expected in the waste. Portland cement is used as an absorbent and solidification agent for the wastes.
103	104	Heat Generation	Reaction will not occur – Polymerizable compounds

Potential Chemical Incompatibilities			
Combination of Reactivity Groups		Reaction Result (A x B)	Explanation of Potential Incompatibility
Group A	Group B		
			are reacted or immobilized/solidified prior to shipping; oxidizing agents are reacted prior to being placed in the waste/shipped
103	104	Fire	Reaction will not occur – Polymerizable compounds are reacted or immobilized/solidified prior to shipping; oxidizing agents are reacted prior to being placed in the waste/shipped
103	104	Toxic Gas Generation	Reaction will not occur – Polymerizable compounds are reacted or immobilized/solidified prior to shipping; oxidizing agents are reacted prior to being placed in the waste/shipped
103	105	Heat Generation	Reaction will not occur – Polymerizable compounds are reacted or immobilized/solidified prior to shipping; reducing agents are reacted prior to being placed in the waste/shipped
103	105	Violent Polymerization	Reaction will not occur – Polymerizable compounds are reacted or immobilized/solidified prior to shipping; reducing agents are reacted prior to being placed in the waste/shipped
103	105	Flammable Gas Generation	Reaction will not occur – Polymerizable compounds are reacted or immobilized/solidified prior to shipping; reducing agents are reacted prior to being placed in the waste/shipped
103	107	Highly Reactive	Reaction will not occur – Polymerizable compounds are reacted or immobilized/solidified prior to shipping; free liquid content is limited to less than 1% of waste volume; water reactive substances are reacted prior to being placed in the waste/shipped. Lime in Portland cement is most common water reactive substance expected in the waste. Portland cement is used as an absorbent and solidification agent for the wastes.
104	105	Heat Generation	Reaction will not occur – Oxidizing agents are reacted prior to being placed in the waste/shipped; reducing agents are reacted prior to being placed in the waste/shipped
104	105	Fire	Reaction will not occur – Oxidizing agents are reacted prior to being placed in the waste/shipped; reducing agents are reacted prior to being placed in the waste/shipped
104	105	Explosion	Reaction will not occur – Oxidizing agents are reacted prior to being placed in the waste/shipped; reducing agents are reacted prior to being placed in the waste/shipped
104	107	Highly Reactive	Reaction will not occur – Oxidizing agents are reacted

Potential Chemical Incompatibilities			
Combination of Reactivity Groups		**Reaction Result (A x B)**	**Explanation of Potential Incompatibility**
Group A	**Group B**		
			prior to being placed in the waste/shipped; free liquid content is limited to less than 1% of waste volume; water reactive substances are reacted prior to being placed in the waste/shipped. Lime in Portland cement is most common water reactive substance expected in the waste. Portland cement is used as an absorbent and solidification agent for the wastes.
105	106	Flammable Gas Generation	Reaction will not occur – Reducing agents are reacted prior to being placed in the waste/shipped; free liquid content is limited to less than 1% of waste volume
105	106	Toxic Gas Generation	Reaction will not occur – Reducing agents are reacted prior to being placed in the waste/shipped; free liquid content is limited to less than 1% of waste volume
105	107	Highly Reactive	Reaction will not occur – Reducing agents are reacted prior to being placed in the waste/shipped; free liquid content is limited to less than 1% of waste volume; water reactive substances are reacted prior to being placed in the waste/shipped. Lime in Portland cement is most common water reactive substance expected in the waste. Portland cement is used as an absorbent and solidification agent for the wastes.
106	107	Highly Reactive	Reaction will not occur – Free liquid content is limited to less than 1% of waste volume; water reactive substances are reacted prior to being placed in the waste/shipped. Lime in Portland cement is most common water reactive substance expected in the waste. Portland cement is used as an absorbent and solidification agent for the wastes.

Attachment C

Shipping Period for TRU Waste in the 10-160B Cask

C.1.0 INTRODUCTION

This Attachment presents the basis for the shipping period for TRU wastes from the time of cask closure until cask opening. This shipping period is used in the analysis of the gas generation in the 10-160B cask.

The 10-160B cask may be used to ship TRU waste from generator sites to the Waste Isolation Pilot Plant (WIPP) for disposal or between sites (e.g., from the Battelle West Jefferson, OH site to the U.S. Department of Energy [DOE] Hanford, WA site) for interim storage. While the shipments are in transit, a satellite tracking system will be operational to monitor progress and provide direct communication between the driver and the transport dispatcher.

C.2.0 EXPECTED SHIPPING PERIOD

The expected shipping period is the amount of time from the sealing of the cask at the loading facility until the opening of the cask at the unloading facility. It consists of: the time from cask sealing to the release of the transport unit from the loading facility, the expected transit time, and the time from arrival at the unloading facility until the cask is opened. For assessing the expected shipping period, it will be assumed that there are no delays.

C.2.1 Loading

The loading process from cask sealing to unit release includes health physics surveys, installing the upper impact limiter, and vehicle inspections. The time from cask sealing until the unit is released for travel has been accomplished in less than four (4) hours. To be conservative, a one-day (24 hour) duration will be assumed.

C.2.2 Transit

The longest route of prospective intersite shipments is from Savannah River, SC to Hanford, approximately 2800 miles. Shipments to WIPP are encompassed by this distance. All TRU shipments will be made with two drivers. Using two drivers, on an appropriate rotational schedule, the truck can travel for twenty-four (24) hours per day for up to seven days. Assuming an average speed of 45 mph, which includes time for vehicle inspections, fueling, meals, and driver relief, the duration of a 2800 mile trip is expected to be 62 hours. Again, to be conservative, the transit duration will be assumed to be three days (72 hours).

C.2.3 Unloading

The unloading process includes receipt survey and security checks, positioning of the trailer in the TRU waste unloading area, removal of the cask from the trailer to a transfer cart, positioning of the cask in the cask unloading room, and removal of the lid. This process has been accomplished in less than eight (8) hours. Again, to be conservative, the unloading duration will be assumed to be one day (24 hours).

C.2.4 Total

The total expected shipping period, with no delays, is less than 75 hours. For the purpose of this analysis, a conservative period of 5 days (120 hours) will be assumed.

C.3.0 SHIPPING DELAYS

The maximum shipping time will be assumed to be the sum of the expected shipping time and the time for delays which could extend the shipping time. These delays are: loading delays; transit delays due to weather or road closures, shipping vehicle accidents, mechanical delays, or driver illness; and unloading delays. Each of these delays are assessed below.

C.3.1 Loading Delays

There are a number of situations that could extend the time between cask sealing and truck release. These include: loading preceding a holiday weekend, problems with a leak test, and handling equipment failure. Both the leak test problem and the handling equipment failure should be resolvable by replacing or obtaining temporary equipment. Each of these situations is unlikely to cause more than a two day delay. The holiday weekend could cause a delay of three days, i.e., from Friday afternoon until Tuesday. It is very unlikely that more than two of the three loading delays could occur on the same shipment, so a total of five days seems a reasonably conservative assessment for a loading delay.

C.3.2 Transit Delays

Transit delays due to weather, e.g., a road closed due to snow, are unlikely to cause a delay of more than five days. A road closure due to a vehicle accident or a roadway or bridge failure would result in re-routing which could add up to two days to the transit time. A transit time delay due to weather or road closure will be assumed to be five days.

Transit delays due to an accident with the truck could cause a lengthy delay. Response time for notification and to take immediate corrective action is assumed to be one day. (The use of the on-board satellite communication system will facilitate an early response.) Accident mitigation may require transferring the cask to a different trailer using cranes and other heavy equipment. Mitigation is assumed to take five days for a total accident delay of six days.

Mechanical problems with the truck or trailer could also cause multi-day delays. Significant failures may require a replacement tractor or trailer. An appropriate response to a mechanical failure is assumed to take four days.

Driver illness could also cause transit delays. If a driver it too ill to continue, a replacement driver will be brought in. A two day delay is assessed for bringing in a replacement driver.

C.3.3 Unloading Delay

An unloading delay will occur if the truck arrives just before a holiday weekend. This could result in a four day delay. Additionally, a delay due to unloading equipment failure could occur. Repair of such equipment should not require more than four days. The unloading delay will be conservatively assumed to be five days. If an unanticipated situation occurs that would result in a much longer delay, the cask can be vented.

C.3.4 Total Delay

The total delay, i.e., the sum of the delay times for each of the delay types, is 27 days. This assumes that each type of delay occurs on the same shipment.

C.4.0 MAXIMUM SHIPPING PERIOD

The maximum shipping period, as the sum of the expected shipping period and the total delay, is 32 days. This period assumes that each of the possible shipping delays occurs on the same shipment, a very unlikely occurrence. Further, for additional conservatism, the assumed maximum will be nearly doubled to 60 days. Thus, a 60 day shipping period will be the maximum used in analysis of gas generation in the sealed cask. As documented in Attachment C of sub-tier Appendix 4.10.2.1, a 10-day controlled shipping period may be used when the shipping distance between shipping site and receiving site is less than or equal to 2,283 miles. The use of a 10-day controlled shipment is an option only for sites that impose the administrative controls specified by Attachment C of sub-tier Appendix 4.10.2.1. The implementation of these controls ensures that the 10-160B cask is loaded at the shipping site, transported from the shipping site to the receiving site, and vented within a maximum of 10 days from the closure (or sealing) of the 10-160B cask inner vessel. The site-specific shipping period may be used in the gas generation analysis for the site's waste.

Appendix 4.10.2.1

Compliance Methodology for TRU Waste From
Battelle Columbus Laboratories (BCL)
West Jefferson, OH

1.0 INTRODUCTION

This appendix presents the methods of preparation and characterization to qualify remote-handled (RH) transuranic (TRU) and contact-handled (CH) TRU waste, as defined by the U.S. Department of Energy (DOE) (Reference 12.1), as payload for transport in the CNS 10-160B cask and to demonstrate that the TRU waste forms at Battelle Columbus Laboratories (BCL), described in this appendix, comply with the payload requirements. The methods for determining each restricted parameter, the factors influencing the parameter values, and the methods used by BCL for demonstrating compliance, are provided in the following sections.

This appendix also includes the following as attachments:

- Content codes BC 121A, BC 121B, BC 312A, BC 314A, BC 321A, BC 321B, and BC 322A (Attachment A)
- Chemical Lists for the above mentioned content codes (Attachment A)
- Methods for Determining Gas Generation Rates and Decay Heat Values (Attachment B).

2.0 PURPOSE

The purpose of this appendix is to describe the methods that shall be used to prepare and characterize the RH-TRU and CH-TRU waste belonging to BCL prior to transport in the CNS 10-160B cask. This appendix is based on the format and requirements for TRU waste identified in Appendix 4.10.2 of the CNS 10-160B Safety Analysis Report (SAR). It incorporates acceptable methods applicable to the content codes listed in Table 3-1 of this appendix.

Section 3.0 describes the TRU waste payload. Sections 4.0 through 11.0 discuss each payload parameter and the BCL methods for demonstrating compliance with the CNS 10-160B cask payload requirements.

3.0 TRU WASTE PAYLOAD FOR CNS 10-160B CASK

TRU waste is classified into content codes, which give a description of the RH-TRU and CH-TRU waste materials in terms of processes generating the waste, the packaging methods used in the waste container(s), and the generating site. Content codes for the RH-TRU and CH-TRU waste from BCL are provided in Attachment A and are listed in Table 3-1.

Table 3-1. BCL Content Codes

Content Code	Waste Form Description
BC 121A, BC 121B	CH-TRU Solid Organic Waste (D&D operations)
BC 312A	RH-TRU Solidified Organic Waste (R&D operations)
BC 314A	RH-TRU Cemented Inorganic Process Solids (R&D operations)
BC 321A	RH-TRU Solid Organic Waste (D&D operations)
BC 321B	RH-TRU Solid Organic Waste (Pool filters and resins)
BC 322A	RH-TRU Solid Inorganic Waste (R&D operations)

D&D = Decontamination and decommissioning.
R&D = Research and development.

The BCL has developed a formal TRU waste certification program that ensures the generation and packaging of waste under rigorous controls and documented procedures, in compliance with all governing regulations. In addition, complete documentation packages, along with quality assurance/quality control records, are generated for all payload containers. All TRU waste generated from the BCL will be packaged under a formal certification program (i.e., the BCL Decommissioning Project (BCLDP) TRU Waste Certification Program (WCP)). TRU waste generated from the BCL will comply with all transportation requirements using the following methods:

- Formally documented acceptable knowledge (AK)/process knowledge of the processes generating the waste
- Visual examination (VE), including audio/video surveillances of all packaging activities, conducted in accordance with approved procedures that ensure the absence of prohibited items and compliance with packaging requirements
- Data packages generated for all payload containers that document the contents and properties of the waste in the container
- Measurement of required parameters to ensure compliance with limits.

4.0 PHYSICAL FORM

4.1 Requirements

The physical form of waste comprising the CNS 10-160B cask payload is restricted to solid or solidified materials in secondary containers. The total volume of residual liquid in a secondary container is restricted to less than 1% by volume. Secondary containers must be shored to prevent movement during accident conditions. Sharp or heavy objects in the waste shall be blocked, braced, or suitably packaged as necessary to provide puncture protection for the payload containers packaging these objects. Sealed containers greater than four liters in size are prohibited.

4.2 Methods of Compliance and Verification

All TRU waste from the BCLDP is newly packaged under procedures and plans that ensure compliance with transportation and other governing regulations. Pursuant to these procedures, compliance with the physical form requirements is ensured by documented AK and VE.

The BCL uses VE to verify the physical waste form descriptions documented as AK. As waste items are sorted, the BCL VE expert evaluates each waste item for consistency with the AK process description for the waste stream being packaged and determines and documents the physical form and description, and material type(s) and composition (percentage) of the item. The BCL AK expert independently reviews determinations made by the VE expert with respect to waste item assignments to waste streams as defined by the AK process descriptions during the AK confirmation process. AK discrepancy reports are generated with associated corrective actions, as necessary. The BCL also uses VE to ensure absence of prohibited items. As waste items are sorted, the BCL VE expert evaluates each waste item. As identified, any prohibited item is segregated for mitigation or other disposition and is not loaded into a waste container for shipment.

In addition to the generation of inventory loading records for each waste container, the VE documentation includes video/audio records. Video documentation of TRU waste packaging shall be performed at all

times when TRU waste is being sorted and packaged under TC-OP-01.4 in the BCL hot cells using two cameras and two videocassette recorders. A microphone feed is provided to verify and verbally note the identification of the waste stream and the container. This process duplicates the information recorded in hardcopy form on the waste container loading record. When TRU waste packages are in the cell, but packaging is not being performed, motion/light sensitive recording equipment shall be left running, with a videocassette in place, to document any movement in the packaging area. This will be used to verify that all packaging was recorded and that no packaging was performed without the proper VE documentation.

The BCLDP TRU WCP will use AK and VE to verify that the liquid content of the payload container complies with the requirements. Packaging personnel shall restrict the presence of free liquids to the extent that is reasonably achievable by pouring, pumping, or aspirating. Free liquids encountered during packaging shall be absorbed. Any liquid in nontransparent inner containers, including pumps or mechanical equipment that may contain an oil reservoir that is not solidified, will be handled by assuming that the container is filled with liquid and the volume will be added to the total liquid documented for the payload container in evaluating compliance with the 1% (volume) limit on free liquids.

BCLDP TRU WCP personnel shall ensure compliance with the requirement associated with sharp or heavy objects through visual examination at the time of packaging as described in TC-OP-01.4, Segregation and Packaging of TRU Waste. BCLDP packaging operations include the practice of size reduction and the use of a 0.015-inch thick steel liner in the 55-gallon drums. Following size reduction, items with the potential to puncture the liner and drum are blocked, braced, or suitably packaged to ensure container integrity. Waste may alternatively be repackaged into 55-gallon drums lined with a rigid polyethylene liner.

BCLDP TRU WCP personnel shall ensure compliance with the requirement associated with sealed containers through visual examination at the time of packaging as described in TC-OP-01.4, Segregation and Packaging of TRU Waste. Sealed containers greater than 4 liters identified during the sorting process will be segregated for disposition and shall not be packaged for shipment.

As described in TC-AP-01.1, TRU Waste Data Package Generation, compliance with each of the restrictions on physical form shall be recorded in the payload container data package.

5.0 CHEMICAL FORM AND CHEMICAL PROPERTIES

5.1 Requirements

The chemical properties of the waste are determined by the chemical constituents allowed in a given content code. Specific requirements regarding the chemical form of the waste are as follows:

- Explosives, nonradioactive pyrophorics, compressed gases, and corrosives are prohibited.
- Pyrophoric radionuclides may be present only in residual amounts less than 1 weight percent.
- The total amount of potentially flammable volatile organic compounds (VOCs) present in the headspace of a secondary container is restricted to 500 parts per million.

5.2 Methods of Compliance and Verification

Compliance with chemical form and chemical property restrictions is demonstrated through process knowledge or sampling programs, if required.

5.2.1 Pyrophoric Materials

Nonradioactive pyrophoric materials (e.g., organic peroxides, sodium metal, and chlorides) shall be segregated and not be packaged into payload containers. Radioactive pyrophoric material (e.g., metallic plutonium and americium), if present in the waste stream, shall be limited to less than 1 weight percent of the payload container. In accordance with TC-OP-01.4, Segregation and Packaging of TRU Waste, qualified BCLDP TRU WCP personnel shall use AK information in conjunction with VE, as described in Section 4.2, during waste generation and packaging to verify the absence of nonradioactive pyrophoric materials and compliance with the restriction on radioactive pyrophoric material (e.g., according to records of waste generation processes, nonradioactive pyrophoric materials have not been used). As described in TC-AP-01.1, TRU Waste Data Package Generation, the absence of nonradioactive pyrophorics and compliance with the restriction on radioactive pyrophoric material shall be recorded in the payload container data package. Any nonradioactive pyrophorics encountered during examination shall be segregated and shall not be shipped.

5.2.2 Explosives, Corrosives, and Compressed Gases

In accordance with TC-OP-01.4, Segregation and Packaging of TRU Waste, qualified BCLDP TRU WCP personnel shall use AK information in conjunction with VE, as described in Section 4.2, during waste generation and packaging to verify the absence of explosives, corrosives, and compressed gases. Any unvented compressed gas canisters (including aerosol cans) identified during the packaging of wastes shall be segregated as described in TC-OP-01.4, Segregation and Packaging of TRU Waste. Acids and bases, if found, shall be neutralized. The absence of explosives, unvented compressed gas canisters, and corrosives shall be documented in the payload container data packages by BCLDP TRU WCP personnel as described in TC-AP-01.1, TRU Waste Data Package Generation.

5.2.3 Flammable VOCs

All TRU waste from the BCL is from research and development or decontamination and decommissioning related activities and will be packaged with the generation of complete data packages. The BCL wastes are not expected to have flammable VOCs based on the content codes, the waste packaging process (sorted and repackaged into drums as individual items, which minimizes the introduction of potentially flammable VOCs into the drums), and the lack of a source for potentially flammable VOCs.

6.0 CHEMICAL COMPATIBILITY

6.1 Requirements

Each content code has an associated chemical list (Attachment A) based on AK information. Chemical constituents in a payload container assigned to a given content code shall conform to these approved chemical lists. Chemicals/materials that are not listed are allowed in trace amounts (quantities less than 1 weight percent) in a payload container provided that the total quantity of trace chemicals/materials is restricted to less than 5 weight percent.
Chemical compatibility of a waste with its packaging ensures that chemical reactions will not occur that might pose a threat to the safe transport of a payload in the CNS 10-160B cask.

6.2 Methods of Compliance and Verification

Attachment B of Appendix 4.10.2 of the CNS 10-160B SAR presents the methodology and results for the chemical compatibility analyses performed for the list of allowable chemicals/materials associated with the TRU waste content codes expected to be shipped in the CNS 10-160B cask. The results of these chemical compatibility analyses show that these content codes can be transported without any incompatibilities.

The chemicals present in the BCL content codes conform to the list of allowable materials in Attachment B of Appendix 4.10.2 of the CNS 10-160B SAR and thereby meet the chemical compatibility requirements. Qualified BCLDP TRU WCP personnel shall document the presence of any chemicals identified during the waste characterization process in the payload container data packages. TC-OP-01.4, Segregation and Packaging of TRU Waste, includes instructions for comparing chemicals noted in the payload container data packages against the chemicals listed in the appropriate content code to ensure the contents of payload containers are compatible.

7.0 GAS DISTRIBUTION AND PRESSURE BUILDUP

7.1 Requirements

Gas distribution and pressure buildup during transport of TRU waste in the CNS 10-160B cask payload are restricted to the following limits:

- The gases generated in the payload must be controlled to prevent the occurrence of potentially flammable concentrations of gases within the payload confinement layers and the void volume of the inner vessel (IV) cavity. Specifically, hydrogen concentrations within the payload confinement layers are limited to 5 percent by volume during a maximum 60-day shipping period (see Attachment C of Appendix 4.10.2 of the CNS 10-160B SAR).

- The gases generated in the payload and released into the IV cavity must be controlled to maintain the pressure within the IV cavity below the acceptable packaging design limit of 31.2 pounds per square inch gauge (psig).

7.2 Methods of Compliance and Verification

Compliance with the CNS 10-160B cask design pressure limit for each BCL content code is analyzed by assuming that all gases generated are released into the IV cavity and by including the contributions from thermal expansion of gases and vapor pressure of atmospheric water.

Table 7-1 shows that the pressure increase during a period of 365 days is below the design pressure limit of 31.2 psig for all the BCL content codes.

Table 7-1. Maximum Pressure Increase Over 365-Day Shipping Period

Content Code	G_{eff} (RT)[a]	Void Volume (Liters)	Activation Energy (kcal/mole)	Decay Heat Limit per Cask	G_{eff}[b]	P_{max}[c] (psig)

				(Watts)		
BC 121A	8.1	1938	2.1	2.26	14.19	31.13
BC 121B	8.1	1938	2.1	2.26	14.19	31.13
BC 312A[d]	--	--	--	--	--	--
BC 314A	0.72	1938	0	7.23	0.72	12.02
BC 321A	8.1	1938	2.1	1.96	14.19	28.10
BC 321B	8.1/2.1[e]	1938	2.1	2.03	4.65	15.03
BC 322A	0.024	1938	0	217	0.024	12.02

[a] G value for net gas (molecules per 100 eV) at room temperature (70°F).
[b] Effective G value (molecules per 100 eV) at maximum operating temperature of 168°F calculated using the Arrhenius equation for which activation energy is an input.
[c] Maximum pressure.
[d] This code consists of solidified organics; compliance with pressure limits will be shown by testing.
[e] BC 321B reports 12% cellulosics and 80% resins (remainder being inorganic material) and is reflected in the calculation of the temperature-corrected G_{eff}.

Compliance with the restrictions on flammable gas concentration is discussed in Section 10.0.

8.0 PAYLOAD CONTAINER AND CONTENTS CONFIGURATION

8.1 Requirements

Fifty-five-gallon drums are authorized payload containers in a CNS 10-160B cask. Up to ten 55-gallon drums of TRU waste may be packaged in the cask. Each 55-gallon drum to be packaged in the CNS cask must have a minimum of one filter vent. The minimum filter vent specifications for the 55-gallon drums and drum liners used to package waste inside the drums are provided in Table 8-1.

The test methods used to determine the compliance of filter vents with the performance-based requirements of flow rate, efficiency, and hydrogen diffusivity shall be directed by procedures under a quality assurance program.

Filter vents shall be legibly marked to ensure both (1) identification of the supplier and (2) date of manufacture, lot number, or unique serial number.

Table 8-1. Minimum Filter Vent Specifications				
	Filter Specification			
Container/Filter Type	Number of Vents Required per Container	Flow Rate (ml/min of air, STP, at 1 inch of water)[a]	Efficiency (percent)	Hydrogen Diffusivity (mol/s/mol fraction at 25°C)
Drum Filter	1	35	99.5	3.70E-6
Drum Liner Filter	1	35	NA[b]	3.70E-6

[a] Filters tested at a different pressure gradient shall have a proportional flow rate (e.g., 35 ml/min at 1 inch of water = 1 L/min at 1 psi).
[b] Filters installed in containers that are overpacked are exempt from the efficiency requirement as the drum must exhibit a ≥99.5 percent efficiency.
NA = Not applicable.

The rigid polyethylene liner, if present, in a payload container shall be punctured with a 1-inch diameter hole before the container is transported in the CNS 10-160B.

8.2 Methods of Compliance and Verification

Procured filter vents at BCL shall be inspected as directed by QD-AP-04.1, Documentation and Control of Purchased Items and Services, to verify compliance with the applicable filter vent specifications specified in the purchase requisition (i.e., visual inspection of certificate of conformance serial numbers to actual filter vents and inspection of filters for physical damage). Under WA-OP-006, Procurement and Inspection of Packagings for Hazardous Materials Shipments, payload containers and liners, if present, shall be visually inspected to ensure that they have been fitted with the required number of filter vents or required hole diameter as specified above. Nonconforming filter vents shall be segregated in accordance with QD-AP-15.1, Nonconformance Reporting for Activities, Items and Materials. As described in TC-OP-01.4, Segregation and Packaging of TRU Waste, qualified BCLDP TRU WCP personnel also shall visually inspect payload containers during packaging to ensure that each has been fitted with the correct type and number of filter vents.

Prior to transport, payload container filter vents shall be visually inspected by the Transportation Certification Official (TCO) for damage or defect. If a defect is identified, a nonconformance report shall be issued in accordance with QD-AP-15.1, Nonconformance Reporting for Activities, Items and Materials, and the payload container shall be returned for repackaging or overpacking prior to certification.

9.0 ISOTOPIC CHARACTERIZATION AND FISSILE CONTENT

9.1 Requirements

The CNS 10-160B cask payload allows 325 FGE of fissile materials. Plutonium content in excess of 0.74 TBq (20 curies) per cask must be in solid form.

9.2 Methods of Compliance and Verification

BCLDP TRU WCP personnel will calculate the fissile or fissionable radionuclide content of the payload container as Pu-239 (plutonium-239) fissile gram equivalents (FGE) and as plutonium curies as described

in DD-98-04, Waste Characterization, Classification and Shipping Support Technical Basis Document, and TC-AP-01.2, Calculations Using Radioassay Data. These calculations are based on the waste generation source and configuration, which establishes the initial radionuclide compositions based on location and initial use. As described in DD-98-04, Waste Characterization, Classification and Shipping Support Technical Basis Document, assay of samples and dose rate measurements, along with the appropriate isotopic composition, are used to determine the isotopic inventory. The TCO shall evaluate the compliance of the total FGE value and the plutonium curies of payload containers with the maximum limits.

It should be noted that BCLDP accountability records indicate no more than approximately 50 grams of fissile material is dispersed throughout the BCL West Jefferson North facility in low isotopic enrichments (Reference 12.2). Therefore, the drum loading of fissile material will be much lower.

10.0 DECAY HEAT AND HYDROGEN GAS GENERATION RATES

This section describes the logic and methodology used in evaluating payload characteristics that meet the hydrogen gas concentration requirement for each of the content codes for the BCL TRU wastes described in this section.

10.1 Requirements

The hydrogen gas concentration shall not exceed 5% by volume in all void volumes within the CNS 10-160B cask payload during a 60-day shipping period. A CNS 10-160B cask payload must be assembled of payload containers belonging to the same content code. Payload containers of different content codes with different bounding G values and resistances may be assembled together as a payload, provided the decay heat limit and hydrogen gas generation rate limit for all payload containers within the payload is conservatively assumed to be the same as that of the payload container with the lowest decay heat limit and hydrogen gas generation rate limit.

10.2 Methodology of Ensuring Compliance with Flammable Gas Concentration Limits

As stated in Appendix 4.10.2 of the CNS 10-160B SAR, chemical, biological, and thermal gas generation mechanisms are insignificant in the CNS 10-160B cask. In addition, as shown in Section 5.1 of Appendix 4.10.2 of the CNS 10-160B SAR, potentially flammable VOCs are restricted to 500 ppm in the headspace of the CNS 10-160B cask secondary containers. Therefore, the only flammable gas of concern for transportation purposes is hydrogen. The concentration of hydrogen within any void volume in a layer of confinement of the payload or in the cask IV has been evaluated during a 60-day shipping period (see Attachment C of Appendix 4.10.2 of the CNS 10-160B SAR).

Attachment A provides the TRU waste content codes for the BCL TRU wastes that are included in the authorized payload for the CNS 10-160B cask. Each content code has a unique and completely defined packaging configuration. Modeling the movement of hydrogen from the waste material to the payload voids, using the release rates of hydrogen through the various confinement layers, defines the relationship between generation rate and void concentration. This modeling allows determination of the maximum allowable hydrogen generation rate for a given content code to meet the 5% concentration limit, as detailed in Section 10.3. Based on hydrogen gas generation potential, quantified by hydrogen gas generation G values, the gas concentration limit can be converted to a decay heat limit, as detailed in Section 10.4. The maximum allowable hydrogen generation rates and decay heat limits for the TRU content codes for BCL wastes are listed in Table 10-1 (see Attachment A of Appendix 4.10.2 of the CNS 10-160B SAR for a description of the Matrix Depletion Program and dose-dependent G values).

Content Code	Maximum Allowable Hydrogen Gas Generation Rate, mole/second/ drum	Maximum Allowable Hydrogen Gas Generation Rate, moles/second/ cask	Maximum Allowable Decay Heat Limit, Watts/Drum (Dose <= 0.012 watt*year)	Maximum Allowable Decay Heat Limit, Watts/Cask (Dose <= 0.012 watt*yr)	Maximum Allowable Decay Heat Limit, Watts/Drum (Dose > 0.012 watt*year)	Maximum Allowable Decay Heat Limit, Watts/Cask (Dose > 0.012 watt*year)
BC 121A	3.944E-8	3.944E-7	0.081	0.81	0.238	2.26[a]
BC 121B	4.745E-8	4.745E-7	0.101	1.01	0.298	2.26[a]
BC 312A	3.429E-8	3.429E-7	–[b]	–[b]	–[b]	–[b]
BC 314A	3.429E-8	3.429E-7	0.723	7.23	0.723	7.23
BC 321A	3.429E-8	3.429E-7	0.096	0.96	0.196	1.96
BC 321B	3.429E-8	3.429E-7	0.181	1.81	0.203	2.03
BC 322A	3.429E-8	3.429E-8	21.7	217	21.7	217

[a] Constrained by total decay heat that will comply with design pressure limit (see Table 7-1).
[b] No decay heat limit or activity limit due to unknown G value.

10.3 Determination of Maximum Allowable Hydrogen Generation Rates for Content Codes

The maximum allowable hydrogen generation rates were determined using the modeling methodology described in Appendix 4.10.2 of the CNS 10-160B SAR and the following input parameters.

Waste Packaging Configuration and Release Rates: Each content code has a unique packaging configuration that is completely defined. The waste described by content codes BC 312A, BC 314A, BC 321A, and BC 322A will be placed directly into a 55-gallon drum lined with a steel liner. The waste described by content code BC 321B will also be placed directly into a 55-gallon drum that may be lined with a steel liner or a polyethylene liner. The waste described by content codes BC 121A and BC 121B will be placed into a 55-gallon drum that may be lined with a polyethylene liner. Ten drums will then be placed into the CNS 10-160B cask. Release rates of hydrogen through the drum filters and drum liner filters have been quantified, and are summarized in Table 10-2. Note that, if used, the polyethylene liner in content codes BC 121A and BC 121B is punctured with a 1-inch diameter hole. For BC 321B if a rigid polyethylene liner is used the release rate associated with liner lid hole is conservatively assumed to be the same as that of the steel liner filter. These are based on release rates obtained for filters (Reference 12.3) at room temperatures. The release rates used in the calculations are the minimum measured values in each case.

Table 10-2. Release Rates of Hydrogen

Content Code	Confinement Layer	Release Rate (mol/sec/mol fraction)	
		T = 233K	T = 348.6K
BC 121A	Polyethylene Liner	5.20×10^{-4}	5.66×10^{-4}
	Drum Filter	2.46×10^{-6}	4.98×10^{-6}
BC 121B	Liner bag	4.67×10^{-6}	4.67×10^{-6} [a]
	Polyethylene liner	5.20×10^{-4}	5.66×10^{-4}
	Drum filter	2.46×10^{-6}	4.98×10^{-6}
BC 312A	Drum Liner Filter	2.46×10^{-6}	4.98×10^{-6}
	Drum Filter	2.46×10^{-6}	4.98×10^{-6}
BC 314A	Drum Liner Filter	2.46×10^{-6}	4.98×10^{-6}
	Drum Filter	2.46×10^{-6}	4.98×10^{-6}
BC 321A	Drum Liner Filter	2.46×10^{-6}	4.98×10^{-6}
	Drum Filter	2.46×10^{-6}	4.98×10^{-6}
BC 321B	Drum Liner Filter	2.46×10^{-6}	4.98×10^{-6}
	Drum Filter	2.46×10^{-6}	4.98×10^{-6}
BC 322A	Drum Liner Filter	2.46×10^{-6}	4.98×10^{-6}
	Drum Filter	2.46×10^{-6}	4.98×10^{-6}

[a] This is the minimum measured value and is applicable to all temperatures.

The release rates in Table 10-2 are shown for two different temperatures. The temperature dependence of these release rates is discussed later in this section.

Void Volume in the CNS 10-160B IV: The cask will have a payload of 10 drums and a drum carriage. The interior volume of the cask, V_{cask}, is 4438 liters. The volume occupied by the drum carriage, $V_{carriage}$, is 143.2 liters. The external volume of a single drum, V_{drum}, is 235.7 liters. The void volume within the cask is calculated as:

$$V_{V,cask} = V_{cask} - V_{carriage} - 10\ V_{drum}$$

$$V_{V,cask} = 4438\ liters - 143.2\ liters - 10\ (235.7\ liters)$$

$$V_{V,cask} = 1938\ liters$$

Pressure: The pressure is assumed to be isobaric and equal to one atmosphere. The mole fraction of hydrogen in each void volume would be smaller if pressurization is considered and would result in a greater maximum allowable hydrogen gas generation rate. Furthermore, the amount of hydrogen gas generated during a 60-day shipping period would be negligible compared to the quantity of air initially present at the time of sealing the CNS 10-160B cask.

Temperature: The input parameter affected by temperature is the release rate through the different confinement layers in the payload containers and the G values for hydrogen. Release rates increase with increasing temperature (Reference 12.4). Therefore, the minimum release rates would be those at the lowest operating temperature. These are the release rates indicated in Table 10-2 for 233K. The minimum decay heat limits are determined by the ratio of the release rates and the G values. In other

words, the higher the release rates, the higher the decay heat limit; the higher the G value, the lower the decay heat limit. The dependence of G values on temperature is documented in Section 10.4. For determining the decay heat limit, the temperature that yielded the minimum decay heat limit for each content code was used as the input parameter.

In summary, the temperature dependence of the input parameters was accounted for in the calculation so that, in each case, the minimum possible limit (hydrogen generation rate or decay heat limit) was obtained. This provides an additional margin of safety in the analysis for each content code.

10.4 Determination of Maximum Allowable Decay Limits

The maximum allowable decay heat limits for the CH-TRU and RH-TRU waste content codes for BCL were calculated using the methodologies described in Appendix 4.10.2 of the CNS 10-160B SAR and the content code-specific G values and waste data described below.

10.4.1 G Value Data

G values for TRU waste are content specific. G values are determined based on the bounding materials present in the payload. The following G values were used for each of the content codes based on the presence of the bounding materials. The G values at 70°F are adjusted to the maximum operating temperature of the CNS 10-160B cask (168°F) using the Arrhenius equation. The maximum operating temperature yields the lowest decay heat limits for the operating temperature range of the CNS 10-160B cask.

Table 10-3 summarizes the bounding G values for hydrogen and the activation energies for the G values for these different content codes at the temperature that provides the minimum decay heat limit. Materials determining these bounding G values are also listed in Table 10-3. These G values are further discussed by content code below.

Dose-dependent G values for the authorized content codes are provided in Table 10-4 at the temperature that provides the minimum decay heat limit (i.e., 348.6K, the maximum operating temperature). The methodology associated with the determination of dose-dependent G values pursuant to the Matrix Depletion Program is further discussed in Attachment A of Appendix 4.10.2 of the CNS 10-160B SAR.

<u>BC 121A and BC 121B</u>
These content codes represent solid organic debris consisting of various combustible and non-combustible items. The material present in this waste with the highest G value at the maximum operating temperature of the CNS 10-160B cask (168°F) is cellulosics and is therefore considered as the bounding material. The G value for hydrogen associated with cellulosics is 3.2 molecules/100eV (at 70°F) if the attained dose is less than or equal to 0.012 watt*year. The dose dependent G value for cellulosics is 1.09 molecules/ 100 eV if the dose attained in the drum is greater than 0.012 watt*yr. The methodology associated with the determination of dose-dependent G values pursuant to the Matrix Depletion Program is further discussed in Attachment A of Appendix 4.10.2 of the CNS 10-160B SAR. The G values at 70°F are adjusted to the maximum operating temperature of the CNS 10-160B cask (168°F) using the Arrhenius equation. The activation energy of the G value for cellulosics is 2.1 kcal/mole. Thus, at the maximum operating temperature of the CNS 10-160B cask (168°F), the bounding hydrogen G values for cellulosics are 5.61 molecules/100 eV (dose ≤ 0.012 watt*year) and 1.91 molecules/100 eV (dose > 0.012 watt*year).

Table 10-3. Summary of Bounding G Values (Dose ≤ 0.012 watt*year)

Content Code	Waste Material	Maximum Hydrogen Gas G value at 70°F (molecules/ 100 eV)	Bounding Hydrogen Gas G Value (molecules/100 eV)			Activation Energy (kcal/mole)
			α-radiation	β-radiation	γ-radiation	
BC 121A	Cellulose	3.2	5.61			2.1
BC 121B	Cellulose	3.2	5.61			2.1
BC 312A	Oils/Alcohol	-	-	-	-	-
BC 314A	30% Water	0.48	0.48	0.48	0.48	0
BC 321A	Cellulose	3.2	4.60	5.61	5.61	2.1
BC 321B	12% Cellulose + 80% Resins	1.74	2.51	3.06	3.06	2.1
BC 322A	1% Water	0.016	0.016	0.016	0.016	0

Table 10-4. Summary of Bounding G Values (Dose > 0.012 watt*year)

Content Code	Waste Material	Maximum Hydrogen Gas G value at 70°F (molecules/ 100 eV)	Bounding Hydrogen Gas G Value (molecules/100 eV)			Activation Energy (kcal/mole)
			α-radiation	β-radiation	γ-radiation	
BC 121A	Cellulose	1.09	1.91			2.1
BC 121B	Cellulose	1.09	1.91			2.1
BC 312A	Oils/Alcohol	-	-	-	-	-
BC 314A	30% Water	0.48	0.48	0.48	0.48	0
BC 321A	Cellulose	1.09	1.57	1.91	5.61	2.1
BC 321B	12% Cellulose + 80% Resins	1.74	2.15	2.62	3.06	2.1
BC 322A	1% Water	0.016	0.016	0.016	0.016	0

BC 312A
This content code represents solidified organics and does not have a defined G value.

BC 314A
This content code represents cemented inorganic process solids consisting of solidified cement slugs. It is assumed that water is the dominant hydrogen gas generating material in the waste form and will therefore be the bounding material. The G value for hydrogen from water is 1.6 molecules/100eV. It is also assumed that the moisture content of the waste is 30% and therefore the G value is 30% of the G value for water or 0.48 molecules/100eV (at all temperatures because the activation energy is 0 kcal/mole). There is no dose dependent G value for this content code per Attachment A of Appendix 4.10.2 of the CNS 10-160B SAR.

BC 321A

This content code represents solid organic debris consisting of various combustible and non-combustible items. The dominant material present in this waste is cellulosics (95%) and is therefore considered as the bounding material. The G value for hydrogen associated with cellulosics is 3.2 molecules/100eV (at 70°F) if the attained dose is less than or equal to 0.012 watt*year. The dose dependent G value for cellulosics is 1.09 molecules/100 eV if the dose attained in the drum is greater than 0.012 watt*yr. The methodology associated with the determination of dose-dependent G values pursuant to the Matrix Depletion Program is further discussed in Attachment A of Appendix 4.10.2 of the CNS 10-160B SAR. The G values at 70°F are adjusted to the maximum operating temperature of the CNS 10-160B cask (168°F) using the Arrhenius equation. The activation energy of the G value for cellulosics is 2.1 kcal/mole. Thus, at the maximum operating temperature of the CNS 10-160B cask (168°F), the bounding hydrogen G values for cellulosics are 5.61 molecules/100 eV (dose ≤ 0.012 watt*year) and 1.91 molecules/100 eV (dose > 0.012 watt*year).

BC 321B

This content code represents organic pool filter and resin waste consisting of ion exchange resins. The dominant material present in this waste is organic resins (80%). The waste also consists of cellulosics (12%). The effective G value for hydrogen for this content code is the sum of 80% of the G value for organic resins (1.7 molecules/100eV at 70°F) and 12% of the G value for cellulosics (3.2 molecules/100eV at 70°F), which is 1.74. G values for this content code at the maximum operating temperature (348.6K) are listed in Tables 10-3 and 10-4.

BC 322A

This content code represents waste consisting of glass, metal, and solidified and other inorganic materials. It is conservatively assumed that residual water is the dominant hydrogen gas generating material in this waste form and will therefore be the bounding material. The G value for hydrogen from water is 1.6 molecules/100eV. It is also assumed that the moisture content of the waste is 1% and therefore the G value is 1% of the G value for water, or 0.016 molecules/100eV (at all temperatures because the activation energy is 0 kcal/mole). There is no dose dependent G value for this content code per Attachment A of Appendix 4.10.2 of the CNS 10-160B SAR.

10.4.2 Waste Data

RadCalc requires as input the following parameters associated with the waste for which the maximum allowable decay heat limit is being calculated:

- Physical Form – liquid, solid, or gas
- Waste Volume – volume of the waste, cm^3
- Waste Mass – mass of the waste, g
- G Value – G value of the waste, molecules per 100 eV

Liquids and gas wastes are prohibited in the CNS 10-160B cask. The volume of the waste is assumed to be 217 liters per drum (the external volume of the waste drum) and 2170 liters for 10 drums in the cask. The waste volume is used by RadCalc, along with the waste mass, to determine the volume of hydrogen generated in the cask. The mass of the waste is calculated based on the assumed bulk density of the waste. The volume of hydrogen generated is directly proportional to the mass of the waste, as discussed in Reference 12.5. The most conservative estimate of the volume of hydrogen (greatest volume) would occur at the highest possible bulk density of the waste. The waste bulk densities for content codes BC 321A and BC 321B are conservatively assumed to be 0.55 g/cm^3 and 0.36 g/cm^3, respectively. A conservative bounding waste bulk density of 1.5 g/cm^3, obtained from Reference 12.6, is used for content codes BC 314A and BC 322A, consisting of cement and metal scrap as bounding materials, respectively.

Representative waste drum data for these content codes provide waste bulk densities well below the 1.5 g/cm^3 bounding bulk density used to calculate the decay heat limits. This mass of waste is calculated based on the total volume of the 10 waste drums (2170 liters).

10.4.3 Determining Decay Heats

Methods for demonstrating compliance of the BCL TRU waste with the decay heat and hydrogen gas generation rate limits are shown in Attachment B.

10.5 Methodology for Compliance with Payload Assembly Requirements

The TCO shall ensure that the CNS 10-160B cask payload consists of payload containers belonging to the same content code. In the event that payload containers of different content codes with different bounding G values and resistances are assembled together in the CNS 10-160B cask, the TCO shall ensure that the decay heat and hydrogen gas generation rate for all payload containers within the payload are less than or equal to the limits associated with the payload container with the lowest decay heat limit and hydrogen gas generation rate limit.

11.0 WEIGHT

11.1 Requirements

The weight limit for the contents of the loaded cask is 14,500 pounds.

11.2 Methods of Compliance and Verification

In accordance with TC-OP-01.4, Segregation and Packaging of TRU Waste, BCLDP shall weigh each payload container and contents on a calibrated scale to determine the total weight of the payload container. Based on the total measured weight of the individual payload containers, BCLDP shall calculate total assembly weight and evaluate compliance with the maximum loaded cask weight limit.

12.0 REFERENCES

12.1 U.S. Department of Energy (DOE), 2002, "Contact Handled-Transuranic Waste Acceptance Criteria for the Waste Isolation Pilot Plant," Rev. 0, *DOE/WIPP-02-3122*, U.S. Department of Energy, Carlsbad Field Office, Carlsbad, New Mexico.

12.2 Battelle Memorial Institute (BMI), 1993. Memorandum from W.J. Zielenbach to W.J. Madia, Subject: Case RSC-151, JN-1 Criticality System, Battelle Memorial Institute, Columbus, Ohio

12.3 Peterson, S.H., E.E. Smeltzer, and R.D. Shaw, 1990, "Determination of Flow and Hydrogen Diffusion Characteristics of Carbon Composite Filters Used at the Waste Isolation Pilot Plant," Westinghouse STC, Chemical and Process Development, Pittsburgh, Pennsylvania.

12.4 Connolly, M.J., S.M. Djordjevic, K.J. Liekhus, C.A. Loehr, and L.R. Spangler, 1998, "Position for Determining Gas Phase Volatile Organic Compound Concentration in Transuranic Waste Containers," *INEEL-95/0109*, Idaho National Engineering and Environmental Laboratory, Idaho Falls, Idaho.

12.5 Flaherty, J.E., A. Fujita, C.P. Deltete, and G.J. Quinn, 1986, "A Calculational Technique to Predict Combustible Gas Generation in Sealed Radioactive Waste Containers," *GEND 041*, EG&G Idaho, Inc., Idaho Falls, Idaho.

12.6 Perry, R.H., D.W. Green, and J.O. Maloney, 1984, *Perry's Chemical Engineers' Handbook*, 6th ed., McGraw-Hill Book Co., New York, New York.

Attachment A

Transuranic Content Codes and Chemical Lists
for Battelle Columbus Laboratories

CONTENT CODE: BC 121

CONTENT DESCRIPTION: Solid Organic Waste – CH-TRU Waste

WASTE DESCRIPTION: This waste consists of a variety of combustible and noncombustible items, and solidified organic and inorganic liquid wastes.

GENERATING SOURCES: This waste is generated from activities supporting the decontamination and decommissioning of Building JN-4 under the Battelle Columbus Laboratories Decommissioning Project (BCLDP).

WASTE FORM: The waste includes combustible items such as cloth and paper products, plastic, cardboard, rubber, wood, tubing, hoses, gloves, and filter waste (e.g., filters and filter housings). The waste includes noncombustible items such as crushed metal cans, scrap metal, piping, paint chips, hand tools, nuts, bolts, nails, Plexiglas, glass, and crucibles. The waste also includes solidified liquids, soil or dirt, and equipment such as vacuum cleaners.

WASTE PACKAGING: For content code BC 121A the waste is contained with one drum liner bag that is then placed inside a rigid polyethylene drum liner, which if present, is punctured with a 1-inch-diameter hole. Ten drums will then be placed into the CNS 10-160B cask. For content code BC 121B waste will be placed directly into a 55-gallon drum with no layers of confinement. The drum may be lined with a rigid polyethylene liner punctured with a 1-inch diameter hole. Ten drums will then be placed into the CNS 10-160B cask.

METHODS FOR DETERMINATION OF ISOTOPIC CHARACTERIZATION: The isotopic information required to demonstrate compliance with the limits on fissile content, decay heat, and curie content will be determined based on the waste generation source and configuration, which establishes the initial radionuclide compositions based on location and initial use. A combination of assay of samples and modeling the isotopic generation processes results in the establishment of a mixture that characterizes the waste in the content code and the majority of waste at the BCLDP. Using shipping package modeling, dose rate and weight measurements based on the mixture then allows the BCLDP to determine the isotopic inventory. As required, additional radioassay (e.g., confirming gamma spectrometry) will be performed.

FREE LIQUIDS: Liquid waste is prohibited in the drums except for residual amounts in well-drained containers. The total volume of residual liquid in a payload container shall be less than 1 volume percent of the payload container. Waste repackaging procedures ensure that free liquids are less than 1 volume percent of the payload container. Liquid waste will be solidified using Floor Dry. Absorbents such as Radsorb or diatomaceous earth will be added to any waste matrix that has the potential to dewater after packaging.

EXPLOSIVE/COMPRESSED GASES: Explosives and compressed gases in the payload containers are prohibited by waste packaging procedures. If present, pressurized cans (e.g., aerosol cans) shall be punctured and emptied prior to packaging.

PYROPHORICS: Nonradioactive pyrophorics (e.g., sodium potassium) in the payload containers are prohibited by waste packaging procedures. Waste packaging procedures shall ensure that all pyrophoric radioactive materials are present only in small residual amounts (less than 1 weight percent) in payload containers.

CORROSIVES: Corrosives are prohibited in the payload container. Acids and bases that are potentially corrosive shall be neutralized and rendered noncorrosive prior to being a part of the waste. The physical form of the waste and the waste generating procedures ensure that the waste is in a nonreactive form.

CHEMICAL COMPATIBILITY: A chemical compatibility study has been performed on this content code, and all waste is chemically compatible for materials in greater than trace (>1% by weight) quantities.

ADDITIONAL CRITERIA: Each drum is fitted with a minimum of one filter vent and the rigid liner, if present, is vented with 1.0-inch minimum diameter hole.

MAXIMUM ALLOWABLE HYDROGEN GENERATION RATES - OPTION 1: The maximum allowable hydrogen generation rate limits are summarized in the table below.

MAXIMUM ALLOWABLE DECAY HEAT LIMIT - OPTION 2: The maximum allowable decay heat limits are summarized in the table below.

Maximum Allowable Hydrogen Gas Generation Rates and Decay Heat Limits

Content Code	Maximum Allowable Hydrogen Gas Generation Rate, mole/second/drum	Maximum Allowable Hydrogen Gas Generation Rate, moles/second/cask	Maximum Allowable Decay Heat Limit, Watts/Drum (Dose <= 0.012 watt*year)	Maximum Allowable Decay Heat Limit, Watts/Cask (Dose <= 0.012 watt*yr)	Maximum Allowable Decay Heat Limit, Watts/Drum (Dose > 0.012 watt*year)	Maximum Allowable Decay Heat Limit, Watts/Cask (Dose > 0.012 watt*year)
BC 121A	3.944E-8	3.944E-7	0.081	0.81	0.238	2.26
BC 121B	4.745E-8	4.745E-7	0.101	1.01	0.298	2.26

BATTELLE COLUMBUS LABORATORIES CONTENT CODES BC 121A AND BC 121B SOLID ORGANIC WASTE

MATERIALS AND CHEMICALS >1%

CARDBOARD
CELLULOSICS
CLOTH
CONCRETE
DIATOMACEOUS EARTH (FLOOR DRY)
DIRT
EQUIPMENT (including vacuum cleaner, motors, and dosimeter system)
FILTERS
GLASS
HYDRAULIC OIL, GLYCOLS, OILS, AND ALCOHOLS (including butanol, ethanol, and methanol)
METALS (including mercury, brass, lead shielding, lead shot, silver, stainless steel, aluminum, iron, copper beryllium, and zirconium)
OTHER INORGANICS
PAINT CHIPS (including barium, cadmium, chromium, and lead)
PAPER
PLASTER-OF-PARIS
PLASTIC
PLEXIGLAS
RADSORB
RUBBER
SOIL
WOOD

MATERIALS AND CHEMICALS <1%

ACIDS AND ACID SOLUTIONS
METALS (including lithium and sodium [reacted; dissolved in butyl alcohol])
SOLVENTS (including acetone, benzene, ethyl alcohol, butyl alcohol, methyl alcohol, ethyl benzene, toulene, hexane, methyl ethyl ketone, trichloroethylene, Marine Strip [contains methylene chloride])
WATER

CONTENT CODE: BC 312A

CONTENT DESCRIPTION: Solidified Organic Waste

WASTE DESCRIPTION: This waste consists of solidified organic and inorganic liquid wastes.

GENERATING SOURCES: This waste is generated during research and development activities conducted in Building JN-1.

WASTE FORM: The waste consists primarily of inorganic and organic liquids that have been solidified using Floor Dry. The inorganic liquids included acids and acid solutions, and elemental mercury. The organic liquids included hydraulic oil, waste water, sludge of sand and mixed fission products (dust, small fragments); small items such as tools may also be present; nonhalogenated organic liquids such as glycols, oils, and alcohols.

WASTE PACKAGING: The waste will be placed directly into a 55-gallon drum with no layers of confinement. The drum is lined with a steel liner. Ten drums will then be placed into the CNS 10-160B cask.

METHODS FOR DETERMINATION OF ISOTOPIC CHARACTERIZATION: The isotopic information required to demonstrate compliance with the limits on fissile content, decay heat, and curie content will be determined based on the waste generation source and configuration, which establishes the initial radionuclide compositions based on location and initial use. A combination of assay of samples and modeling the isotopic generation processes results in the establishment of a mixture that characterizes the waste in the content code and the majority of waste at the BCLDP. Using shipping package modeling, dose rate and weight measurements based on the mixture then allows the BCLDP to determine the isotopic inventory. As required, additional radioassay (e.g., confirming gamma spectrometry) will be performed.

FREE LIQUIDS: Liquid waste is prohibited in the drums except for residual amounts in well-drained containers. The total volume of residual liquid in a payload container shall be less than 1 volume percent of the payload container. Waste packaging procedures ensure that free liquids are less than 1 volume percent of the payload container. Absorbents such as Radsorb or diatomaceous earth (e.g., Floor Dry) will be added to any waste matrix that has the potential to dewater after packaging.

EXPLOSIVE/COMPRESSED GASES: Explosives and compressed gases in the payload containers are prohibited by waste packaging procedures. If present, pressurized cans shall be punctured and emptied prior to packaging.

PYROPHORICS: Nonradioactive pyrophorics in the payload containers are prohibited by waste packaging procedures. Waste packaging procedures shall ensure that all pyrophoric radioactive materials are present only in small residual amounts (less than 1 weight percent) in payload containers.

CORROSIVES: Corrosives are prohibited in the payload container. Acids and bases that are potentially corrosive shall be neutralized and rendered noncorrosive prior to being a part of the waste. The physical form of the waste and the waste generating procedures ensure that the waste is in a nonreactive form.

CHEMICAL COMPATIBILITY: A chemical compatibility study has been performed on this content code, and all waste is chemically compatible for materials in greater than trace (>1% by weight) quantities.

ADDITIONAL CRITERIA: Each drum is fitted with a minimum of one filter vent. The steel liner is fitted with a filter with a hydrogen diffusivity of 3.7E-06 mole/second/mole fraction.

MAXIMUM ALLOWABLE HYDROGEN GENERATION RATES - OPTION 1: The maximum allowable hydrogen generation rate limit is 3.429E-08 moles per second per drum and 3.429E-07 moles per second per CNS 10-160B cask.

MAXIMUM ALLOWABLE DECAY HEAT LIMIT - OPTION 2: There is no decay heat limit for this content code as no G values have been established. Waste cannot be transported under Option 2.

BATTELLE COLUMBUS LABORATORIES CONTENT CODE BC 312A
SOLIDIFIED ORGANIC WASTE

MATERIALS AND CHEMICALS >1%

DIATOMACEOUS EARTH (FLOOR DRY)
ACIDS AND ACID SOLUTIONS
MERCURY
HYDRAULIC OIL, GLYCOLS, OILS, AND ALCOHOLS
SAND
VERMICULITE
RADSORB
AQUA-SET/PETRO-SET

MATERIALS AND CHEMICALS <1%

METALS (including stainless steel, aluminum, iron, copper, lead, beryllium, and zirconium)

CONTENT CODE: BC 314A

CONTENT DESCRIPTION: Cemented Inorganic Process Solids

WASTE DESCRIPTION: This waste consists of slugs produced from dissolving fuel specimens in an acid solution that was then diluted several times and mixed with cement and water and allowed to solidify in foam cups.

GENERATING SOURCES: This waste is generated during repackaging of the waste materials generated from research and development activities conducted in Building JN-1.

WASTE FORM: The waste consists of slugs produced from dissolving fuel specimens in an acid solution which was then diluted several times and mixed with cement and water and allowed to solidify in foam cups. The slugs will contain limited amounts of radionuclides from fuel because of this dilution. The waste matrix will also include Floor Dry added during repackaging to absorb any water from condensation or dewatering.

WASTE PACKAGING: The waste will be placed directly into a 55-gallon drum with no layers of confinement. The drum is lined with a steel liner. Ten drums will then be placed into the CNS 10-160B cask.

METHODS FOR DETERMINATION OF ISOTOPIC CHARACTERIZATION: The isotopic information required to demonstrate compliance with the limits on fissile content, decay heat, and curie content will be determined based on the waste generation source and configuration, which establishes the initial radionuclide compositions based on location and initial use. A combination of assay of samples and modeling of the isotopic generation process used in the establishment of a mixture that characterizes the waste in the content code and the majority of waste at the BCLDP. Using shipping package modeling, dose rate and weight measurements based on the mixture then allows the BCLDP to determine the isotopic inventory. As required, additional radioassay (e.g., confirming gamma spectroscopy) will be performed.

FREE LIQUIDS: Liquid waste is prohibited in the drums except for residual amounts in well-drained containers. The total volume of residual liquid in a payload container shall be less than 1volume percent of the payload container. Waste packaging procedures ensure that free liquids are less than 1 volume percent of the payload container. Absorbents such as diatomaceous earth will be added to any waste matrix that has the potential to dewater after packaging.

EXPLOSIVE/COMPRESSED GASES: Explosives and compressed gases in the payload containers are prohibited by waste packaging procedures. If present, pressurized cans shall be punctured and emptied prior to packaging.

PYROPHORICS: Nonradioactive pyrophorics in the payload containers are prohibited by waste packaging procedures. Waste packaging procedures shall ensure that all pyrophoric radioactive materials are present only in small residual amounts (less than 1 weight percent) in payload containers.

CORROSIVES: Corrosives are prohibited in the payload container. Acids and bases that are potentially corrosive shall be neutralized and rendered noncorrosive prior to being a part of the waste. The physical form of the waste and the waste generating procedures ensure that the waste is in a nonreactive form.

CHEMICAL COMPATIBILITY: A chemical compatibility study has been performed on this content code, and all waste is chemically compatible for materials in greater than trace (>1% by weight) quantities.

ADDITIONAL CRITERIA: Each drum is fitted with a minimum of one filter vent. The steel liner is fitted with a filter with a hydrogen diffusivity of 3.7E-06 mole/second/mole fraction.

MAXIMUM ALLOWABLE HYDROGEN GENERATION RATES - OPTION 1: The maximum allowable hydrogen generation rate limit is 3.429E-08 moles per second per drum and 3.429E-07 moles per second per CNS 10-160B cask.

MAXIMUM ALLOWABLE DECAY HEAT LIMIT - OPTION 2: The maximum allowable decay heat limit is 0.723 watts per drum and 7.23 watts per CNS 10-160B cask.

BATTELLE COLUMBUS LABORATORIES CONTENT CODE BC 314A
CEMENTED INORGANIC PROCESS SOLIDS

MATERIALS AND CHEMICALS >1%

DIATOMACEOUS EARTH (FLOOR DRY)
CEMENT SLUGS

MATERIALS AND CHEMICALS <1%

NITRIC ACID
WATER

CONTENT CODE: BC 321A

CONTENT DESCRIPTION: Solid Organic Waste

WASTE DESCRIPTION: This waste consists of a variety of combustible and noncombustible items.

GENERATING SOURCES: This waste is generated from activities supporting the decontamination and decommissioning of Building JN-1 under the Battelle Columbus Laboratories Decommissioning Project (BCLDP).

WASTE FORM: The waste may include combustible items such as cloth and paper products (e.g., from the cleanup of spills), rags, coveralls and booties, plastic, cardboard, rubber, wood, surgeons gloves, and Kimwipes. The waste may also include filter waste (e.g., dry box filters, HEPA filters, and filter cartridges); noncombustible Benelex and Plexiglas neutron shielding, blacktop, concrete, dirt, and sand; leaded gloves and aprons comprised of Hypalon rubber and lead oxide impregnated neoprene; and small amounts of metal waste. The waste may also include particulate and sludge-type organic process solids immobilized/solidified with Portland cement, vermiculite, Aqua-Set, or Petro-Set.

WASTE PACKAGING: The waste will be placed directly into a 55-gallon drum with no layers of confinement. The drum is lined with a steel liner. Ten drums will then be placed into the CNS 10-160B cask.

METHODS FOR DETERMINATION OF ISOTOPIC CHARACTERIZATION: The isotopic information required to demonstrate compliance with the limits on fissile content, decay heat, and curie content will be determined based on the waste generation source and configuration, which establishes the initial radionuclide compositions based on location and initial use. A combination of assay of samples and modeling of the isotopic generation process, results in the establishment of a mixture that characterizes the waste in the content code and the majority of waste at the BCLDP. Using shipping package modeling, dose rate and weight measurement based on the mixture then allows the BCLDP to determine the isotopic inventory. As required, additional radioassay (e.g., confirming gamma spectroscopy) will be performed.

FREE LIQUIDS: Liquid waste is prohibited in the drums except for residual amounts in well-drained containers. The total volume of residual liquid in a payload container shall be less than 1 volume percent of the payload container. Waste packaging procedures ensure that free liquids are less than 1 volume percent of the payload container. Absorbents such as Radsorb or diatomaceous earth will be added to any waste matrix that has the potential to dewater after packaging.

EXPLOSIVE/COMPRESSED GASES: Explosives and compressed gases in the payload containers are prohibited by waste packaging procedures. If present, pressurized cans shall be punctured and emptied prior to packaging.

PYROPHORICS: Nonradioactive pyrophorics in the payload containers are prohibited by waste packaging procedures. Waste packaging procedures shall ensure that all pyrophoric radioactive materials are present only in small residual amounts (less than 1 weight percent) in payload containers.

CORROSIVES: Corrosives are prohibited in the payload container. Acids and bases that are potentially corrosive shall be neutralized and rendered noncorrosive prior to being a part of the waste. The physical form of the waste and the waste generating procedures ensure that the waste is in a nonreactive form.

CHEMICAL COMPATIBILITY: A chemical compatibility study has been performed on this content code, and all waste is chemically compatible for materials in greater than trace (>1% by weight) quantities.

ADDITIONAL CRITERIA: Each drum is fitted with a minimum of one filter vent. The steel liner is fitted with a filter with a hydrogen diffusivity of 3.7E-06 mole/second/mole fraction.

MAXIMUM ALLOWABLE HYDROGEN GENERATION RATES - OPTION 1: The maximum allowable hydrogen generation rate limit is 3.429E-08 moles per second per drum and 3.429E-07 moles per second per CNS 10-160B cask.

MAXIMUM ALLOWABLE DECAY HEAT LIMIT - OPTION 2: The maximum allowable decay heat limit is 0.096 watts per drum and 0.96 watts per CNS 10-160B cask if dose #0.012 watt*yr and 0.196 watts per drum and 1.96 watts per CNS 10-160B cask if dose >0.012 watt*yr.

BATTELLE COLUMBUS LABORATORIES CONTENT CODE BC 321A
SOLID ORGANIC WASTE

MATERIALS AND CHEMICALS >1%

BLACKTOP (ASPHALT)
CELLULOSICS
RUBBER
DIATOMACEOUS EARTH (FLOOR DRY)
GLASS
IRON-BASED METAL/ALLOYS
PAPER
PLASTIC
RADSORB
CLOTH
CARDBOARD
WOOD
KIMWIPES
FILTERS
BENELEX
PLEXIGLAS
NEOPRENE
PORTLAND CEMENT
VERMICULITE
AQUA-SET/PETRO-SET
OTHER INORGANICS

MATERIALS AND CHEMICALS <1%

METALS (including aluminum, lead, zirconium, stainless steel, and carbon steel)
CONCRETE
SOIL

CONTENT CODE: BC 321B

CONTENT DESCRIPTION: Solid Organic Waste

WASTE DESCRIPTION: This waste consists of a variety of combustible and noncombustible items.

GENERATING SOURCES: This waste is generated during the change-out of resins in the Transfer/Storage Pool filtering system in Building JN-1 (Hot Cell Laboratory).

WASTE FORM: The waste may include filter waste (e.g., pool filters); nuclear grade resin, resin bags, paper, rubber gloves, Floor Dry bags, seals, hoses, valves, and clamps.

WASTE PACKAGING: The waste will be placed directly into a 55-gallon drum with no layers of confinement. The drum may be lined with a steel or polyethylene liner. Ten drums will then be placed into the CNS 10-160B cask.

METHODS FOR DETERMINATION OF ISOTOPIC CHARACTERIZATION: The isotopic information required to demonstrate compliance with the limits on fissile content, decay heat, and curie content will be determined based on the waste generation source and configuration, which establishes the initial radionuclide compositions based on location and initial use. A combination of assay of samples and modeling the isotopic generation process results in the establishment of a mixture that characterizes the waste in the content code. Using shipping package modeling, dose rate and weight measurements based on the mixture then allows the BCLDP to determine the isotopic inventory. As required, additional radioassay (e.g., confirming gamma spectrometry) will be performed.

FREE LIQUIDS: Liquid waste is prohibited in the drums except for residual amounts in well-drained containers. The total volume of residual liquid in a payload container shall be less than 1 volume percent of the payload container. Waste packaging procedures ensure that free liquids are less than 1 volume percent of the payload container. Absorbents such as Radsorb or diatomaceous earth will be added to any waste matrix that has the potential to dewater after packaging.

EXPLOSIVE/COMPRESSED GASES: Explosives and compressed gases in the payload containers are prohibited by waste packaging procedures. If present, pressurized cans shall be punctured and emptied prior to packaging.

PYROPHORICS: Nonradioactive pyrophorics in the payload containers are prohibited by waste packaging procedures. Waste packaging procedures shall ensure that all pyrophoric radioactive materials are present only in small residual amounts (less than 1 weight percent) in payload containers.

CORROSIVES: Corrosives are prohibited in the payload container. Acids and bases that are potentially corrosive shall be neutralized and rendered noncorrosive prior to being a part of the waste. The physical form of the waste and the waste generating procedures ensure that the waste is in a nonreactive form.

CHEMICAL COMPATIBILITY: A chemical compatibility study has been performed on this content code, and all waste is chemically compatible for materials in greater than trace (>1% by weight) quantities.

ADDITIONAL CRITERIA: Each drum is fitted with a minimum of one filter vent, and the steel or polyethylene liner, if present, is either punctured or fitted with a filter with a hydrogen diffusivity of 3.7E-06 mole/second/mole fraction.

MAXIMUM ALLOWABLE HYDROGEN GENERATION RATES - OPTION 1: The maximum allowable hydrogen generation rate limit is 3.429E-08 moles per second per drum and 3.429E-07 moles per second per CNS 10-160B cask.

MAXIMUM ALLOWABLE DECAY HEAT LIMIT - OPTION 2: The maximum allowable decay heat limit is 0.181 watts per drum and 1.81 watts per CNS 10-160B cask if dose #0.012 watt*yr and 0.203 watts per drum and 2.03 watts per CNS 10-160B cask if dose >0.012 watt*yr.

BATTELLE COLUMBUS LABORATORIES CONTENT CODE BC 321B
SOLID ORGANIC WASTE

MATERIALS AND CHEMICALS >1%

CELLULOSICS (≤12 weight %)
RUBBER
DIATOMACEOUS EARTH (FLOOR DRY)
ION EXCHANGE RESIN (≤80 weight %)
IRON-BASED METAL/ALLOYS
RADSORB
RESIN BAGS
FILTERS
OTHER INORGANICS

MATERIALS AND CHEMICALS <1%

METALS (including aluminum, lead, zirconium, stainless steel, and carbon steel)

CONTENT CODE: BC 322A

CONTENT DESCRIPTION: Solid Inorganic Waste

WASTE DESCRIPTION: This waste consists of a variety of glass and metal materials.

GENERATING SOURCES: This waste is generated during repackaging of the waste materials generated from research and development activities conducted in Building JN-1.

WASTE FORM: The waste consists primarily of glass and metal debris. Glass debris includes laboratory glassware, windows, leaded glass windows, and various glass apparatus. Metal items may include deteriorated berry cans, cable, wire, planchets, signs, valves, piping, strapping, tools, foils, sheeting, fixtures, equipment (e.g., pumps or motors that have had all oil or any other free liquids removed up to an allowance of 1%), hardware (e.g., nuts, bolts, brackets), specimen vials, fuel rod cladding, metallurgical mounts, and lead lined tubing. Metals of construction include stainless steel, aluminum, iron, copper, lead, beryllium, and zirconium.

WASTE PACKAGING: The waste will be placed directly into a 55-gallon drum with no layers of confinement. The drum is lined with a steel liner. Ten drums will then be placed into the CNS 10-160B cask.

METHODS FOR DETERMINATION OF ISOTOPIC CHARACTERIZATION: The isotopic information required to demonstrate compliance with the limits on fissile content, decay heat, and curie content will be determined based on the waste generation source and configuration, which establishes the initial radionuclide compositions based on location and initial use. A combination of assay of samples and modeling of the isotopic generation process used in the establishment of a mixture that characterizes the waste in the content code and the majority of waste at the BCLDP. Using shipping package modeling, dose rate and weight measurements based on the mixture then allows the BCLDP to determine the isotopic inventory. As required, additional radioassay (e.g., confirming gamma spectroscopy) will be performed.

FREE LIQUIDS: Liquid waste is prohibited in the drums except for residual amounts in well-drained containers. The total volume of residual liquid in a payload container shall be less than 1 volume percent of the payload container. Waste packaging procedures ensure that free liquids are less than 1 volume percent of the payload container. Absorbents such as diatomaceous earth (e.g., Floor Dry) will be added to any waste matrix that has the potential to dewater after packaging.

EXPLOSIVE/COMPRESSED GASES: Explosives and compressed gases in the payload containers are prohibited by waste packaging procedures. If present, pressurized cans shall be punctured and emptied prior to packaging.

PYROPHORICS: Nonradioactive pyrophorics in the payload containers are prohibited by waste packaging procedures. Waste packaging procedures shall ensure that all pyrophoric radioactive materials are present only in small residual amounts (less than 1 weight percent) in payload containers.

CORROSIVES: Corrosives are prohibited in the payload container. Acids and bases that are potentially corrosive shall be neutralized and rendered noncorrosive prior to being a part of the waste. The physical form of the waste and the waste generating procedures ensure that the waste is in a nonreactive form.

CHEMICAL COMPATIBILITY: A chemical compatibility study has been performed on this content code, and all waste is chemically compatible for materials in greater than trace (>1% by weight) quantities.

ADDITIONAL CRITERIA: Each drum is fitted with a minimum of one filter vent. The steel liner is fitted with a filter with a hydrogen diffusivity of 3.7E-06 mole/second/mole fraction.

MAXIMUM ALLOWABLE HYDROGEN GENERATION RATES - OPTION 1: The maximum allowable hydrogen generation rate limit is 3.429E-08 moles per second per drum and 3.429E-07 moles per second per CNS 10-160B cask.

MAXIMUM ALLOWABLE DECAY HEAT LIMIT - OPTION 2: The maximum allowable decay heat limit is 21.7 watts per drum and 217 watts per CNS 10-160B cask.

BATTELLE COLUMBUS LABORATORIES CONTENT CODE BC 322A
SOLID INORGANIC WASTE

MATERIALS AND CHEMICALS >1%

CEMENT
DIATOMACEOUS EARTH (FLOOR DRY)
GLASS
METALS (including stainless steel, aluminum, iron, copper, lead, beryllium, and zirconium)
IRON-BASED METAL/ALLOYS
OTHER INORGANICS

MATERIALS AND CHEMICALS <1%

CARBON TETRACHLORIDE
1,1,1-TRICHLOROETHANE
TRICHLOROETHYLENE

Attachment B

Methodology for Determination of Decay Heats
and Hydrogen Gas Generation Rates for
Content Codes
for Battelle Columbus Laboratories

1.0 INTRODUCTION

All Battelle Columbus Laboratories Decommissioning Project (BCLDP) transuranic (TRU) waste to be transported in the CNS 10-160B cask shall comply with the 5% (by volume) limit on hydrogen concentration during transport. If a bounding G value and decay heat limit have been established for the approved content code, compliance with the decay heat limit shall be evaluated pursuant to this attachment for the individual containers under the content code. If compliance with the decay heat limit cannot be demonstrated, the hydrogen generation rate of the container shall be determined as outlined in this attachment and compared to the hydrogen gas generation rate limit specified for that approved content code. If the container meets the limit, it is eligible for shipment if all other transportation requirements are met. If the container does not meet the limit, it cannot be shipped and shall be segregated for repackaging or other mitigation measures.

2.0 DECAY HEAT METHODOLOGY

This section describes the general features of nondestructive assay methods used in conjunction with acceptable knowledge by the BCLDP.

The overall methodology for the determination of the radioassay properties is described in DD-98-04, Waste Characterization, Classification, and Shipping Support Technical Basis Document and is summarized in Figure 1. Under the methodology, the isotopic content for an identified TRU waste stream is determined by a combination of (1) representative waste stream sample analyses, (2) conservative application of the Oak Ridge Isotope Generation and Depletion (ORIGEN2) code values for isotopes expected to be present, but not represented by the sample analyses, and (3) assessment of cesium (Cs)-137 content of a payload container based on external radiation field measurements and calculation of TRU isotopic content using a ratio of radionuclides based on known Cs-137 content. The determinations are verified on an approved, periodic basis by sample submission to the BCLDP Radioanalytical Laboratory for gamma and/or alpha spectroscopy. The results of the implementation of the DD-98-04 methodology provide the data inputs to the computer program (spreadsheet) used by the TRU Waste Transportation Certification Official to determine the parameters of interest for each payload container (including fissile grams equivalent and decay heat).

Since the gamma rays emitted by radionuclides can be readily detected and quantified by common measurement techniques, i.e., as a dose rate, emitted gamma are used to model the quantity of isotopes present in a standard waste stream. Verifying samples are analyzed for both gamma and alpha emitters. Because isotopes other than gamma emitters are known to be present, laboratory measurements of the isotopic distribution are combined with a computer-generated distribution of account for required isotopes, e.g., per U.S. Department of Transportation requirements. The measured isotopic distribution is based on laboratory analysis (alpha and gamma spectroscopy) of air, smear and material samples taken from throughout the accessible work areas of Building JN-1. Using the measured distribution as a base, the remaining isotopes are scaled according to the distribution generated by the ORIGEN2 computer code, which models the production and decay of fission and activation products of commercial nuclear power plant fuel. Commercial fuel best characterizes the overwhelming majority of the isotopes present, by isotope and relative ratio.

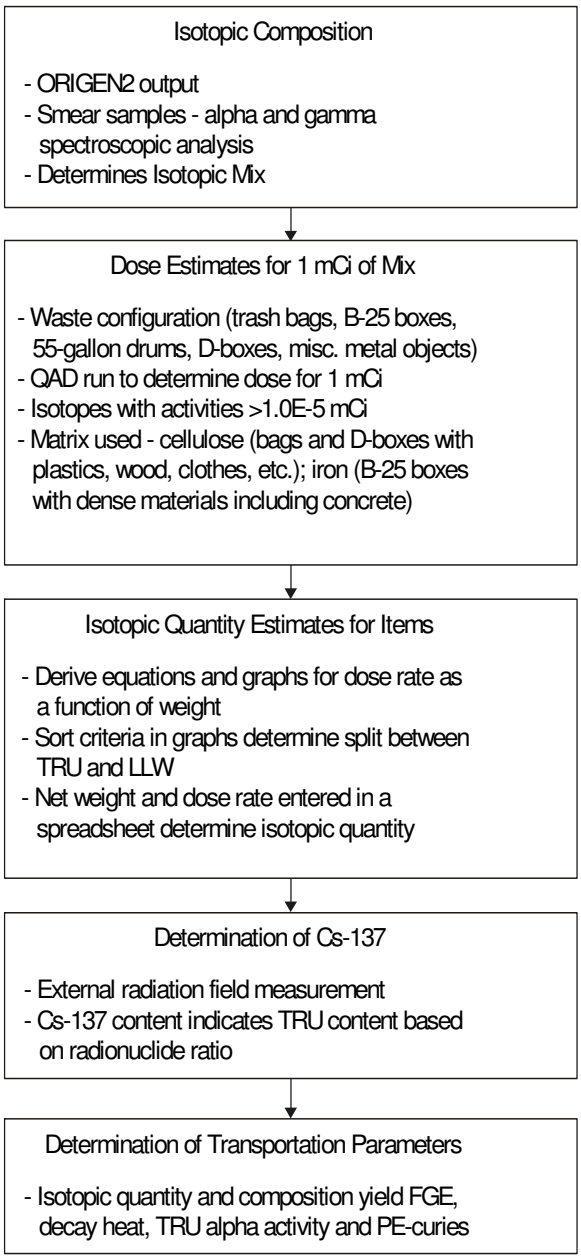

Figure 1
BCLDP Methodology for Determination
of Radioassay Properties for TRU Waste

The "JN standard isotopic mixture" used in the model is representative of the composition of the majority of radioactive waste generate in all areas of the BCL facility, except the pool. Waste from the pool is separately characterized based on sample results. In addition to the pool waste, other waste streams may be encountered that do not match the JN standard isotopic mix. In such cases, the newly characterized waste will be characterized based on specific analytical results (alpha and gamma spectroscopy).

A given quantity of the JN standard isotopic mixture is used as the radioactive material source with the QAD computer shielding code to generate external gamma ray interaction rates for various package and form weights. These interaction rates are used to generate interaction rates-to-weight conversion equations for each package and waste form. The equations are incorporated into spreadsheets so that activity content, in millicuries, for individual packages and waste forms can be calculated. Spreadsheets are also used to calculate TRU interaction rate levels, and plots of these values as a function of net container weight are provided for each container type to simplify field sorting and packaging.

Required QAD inputs include source and package dimensions including any shielding materials, and quantities of individual isotopes that make up the source (i.e., JN standard isotopic mixture). QAD calculations are performed for a range of representative weights for each package. Specific package models include field sort waste bag, metal case, IP-2 147-cubic-feet box, standard D-box, 55-gallon drum, and standard B-25 box models. The final packaging configuration for BCL TRU waste is the 55-gallon drum.

Waste matrices are modeled as either cellulose or iron. The cellulose matrix represents the varied composition of the bag and D-box models, which are composed of plastics, wood, cloth, etc., and are similar to cellulose in their electronic configuration. The iron matrix is used for the B-25 box and 55-gallon drum models, which include a range of more dense materials, including concrete. The choice of waste matrices is conservative as the physical properties of cellulose and iron relative to radiological parameters are well characterized. It is important to note that the representative weights for 55-gallon drum, for example, correspond to a density much less than the density of iron (7.86 g/cm^3), on the close order of less than 1.0 g/cm^3.

As detailed in DD-98-04, estimated uncertainties associated with the container weight, Cs-137 activity based on measurement of decay gammas emanating from the container, and estimation of inventories of other radionuclides and total transuranics based on measured or predicted ratios to Cs-137 activity have been factored into the determinations of an upper bounding uncertainty for the methodology.

The application of the ORIGEN2 code in the proposed BCLDP TRU Waste Certification Program methodology for determining radioassay properties for TRU wastes is conservative. In addition, associated measurement errors and assumptions have been conservatively estimated to determine a total error that is bounding for the methodology. The following subsection provides details on the application of the ORIGEN2 code for determining the radioassay properties.

Application of ORIGEN2 Code

The ORIGEN2 code (RSIC Code Package CCC-371) is used in the DD-98-04 methodology. Characterization of the JN standard isotopic distribution depended upon whether available data existed to permit estimation of the normalized activity ratio (to Cs-137 activity) for the isotopes of interest. Where sufficient data were available, a lognormal fit was used. Where insufficient data was available, the results of a series of ORIGEN2 software analyses were employed.

For Am-241, Cm-244, Co-60, Cs-134, Eu-154, Np-237, Pu-238, Pu-239/-240, Sb–125, Sr-90, U-234, and U-238, as many as 69 samples from the anticipated waste stream were available. A two-parameter (μ, σ) lognormal distribution was fitted to these data. The mean parameter (μ) estimated for each studied isotope represented its assumed normalized activity ratio (to Cs-137) in the standard isotopic distribution. The estimated spread parameter (σ) was used in considering the total uncertainty associated with the waste characterization.

For the isotopes of interest, the computer code ORIGEN2 was used to estimate their normalized activity ratio (to Cs-137). Specifically, values were assumed for enrichments, burn-up, and decay consistent with the processed used to generate the waste stream being classified. These values were then applied as parameters within the ORIGEN2 software, producing estimates of the activities of the various isotopes of interest.

Professional judgement consensus center, low, and high values were identified for each of these three parameters: enrichment, burn up, and decay. Taken together, these three values were meant to represent the central tendency and distribution (i.e., practical range) of the enrichment, burn up, and decay of potential waste streams. A deliberate choice was made to underestimate the decay time so as to make the resultant values conservative.

Twenty-seven iterations of ORIGEN2 software code would be required to consider each combination of these three values for each of three parameters (i.e., $3^3 = 27$). Additional code runs would be necessary, moreover, to provide some measure of the uncertainty associated with the application of ORIGEN2 in estimating the normalized activity ratios of the remaining isotopes of interest. Latin Hypercube sampling is an alternative approach, allowing for effective integration of computer code but with fewer runs. In order to apply these values in the context of a Latin Hypercube design, an assumed distribution is required for each parameter considered in the design. Because the low and high values for each parameter were not symmetric in relation to the center value, a skewed distribution was selected. The lognormal represents a skewed distribution that can be readily applied without additional mathematical complication. The log-transformed center value was assumed to represent the distribution's log mean, and its log standard deviation was derived by averaging the deviations of the log-transformed low and high values from the log mean. Specifically, the average deviation was assumed to represent 1.645 (i.e., the 0.95 quantile of a standard normal distribution) times the log-standard deviation. Doing so is equivalent to assuming the low and high values represent, on average, a range from the 5th to the 95th percentile of the distribution.

In using the ORIGEN2 software code to characterize the normalized activity ratios for the isotopes without available data, the Latin Hypercube employed in the DD-98-04 methodology assumed that values for enrichment, burn up, and decay and software together represent a 'black-box' estimation of normalized activity ratios. Using this approach, a series of replicate designs is applied. The mean result from each replicate design is considered when estimating the mean and variance in normalized activity.

Four replicates of a five-sample Latin Hypercube design were developed thereby providing 20 analysis runs. The distribution of each parameter was divided into five partitions of equal probability. Latin Hypercube sampling, then, insures that a random value of each partition is included in each of the five replicated designs, while minimizing the total number of required analysis runs.

The mean result across the 20 ORIGEN2 runs (or equivalently, the mean of the mean results determined for the four replicated designs) estimated for each studied isotope represents its assumed normalized activity ratio (to Cs-137) in the standard isotopic distribution. Though ORIGEN2 reports activities for all the isotopes of interest, only the results for those isotopes without sufficient available sample data are

retained. The ORIGEN2 results and those based on available data are comparable. The estimated variance in mean result across the four replicate designs—a measure of the uncertainty associated with using the ORIGEN2 software to characterize isotope activity—is used in considering the total uncertainty associated with the waste characterization.

3.0 OBJECTIVES OF THE GAS GENERATION TESTING

The maximum allowable hydrogen gas generation rates for the TRU content codes for the BCLDP are provided in Table 10-1 of this appendix. Compliance with the hydrogen gas generation rate shall be demonstrated by testing. Compliance with the requirements of this test plan should be documented in site-specific procedures under a documented quality assurance program.

4.0 GAS GENERATION TEST METHODOLOGY

The following sections describe how compliance with the limit on the hydrogen gas generation rate will be implemented for each authorized content code for BCLDP.

Demonstration of Compliance With Hydrogen Gas Generation Limit

During the course of the testing, the headspace gas of the selected waste containers will be sampled and analyzed to determine the concentrations of hydrogen and other gases that are produced by radiolysis or present when the waste was packaged. Sampling lines that communicate with the headspace of the waste containers will be installed. Samples of the headspace gas will be withdrawn periodically and analyzed using a gas chromatograph and/or a mass spectrometer. The analytical results will be used to calculate the hydrogen gas generation rate. The measured hydrogen gas generation rate will be compared to the appropriate hydrogen gas generation limits for each content code to evaluate compliance with transportation requirements.

Because all layers of confinement in all the containers have been vented since the time of generation and the containers have been in a vented condition for a period of time, steady-state hydrogen concentrations exist within all void volumes inside a container. At steady-state conditions, the rate of gas generation by radiolysis equals the release rate of gas across each layer of confinement. The measured hydrogen gas concentration in the headspace gas will be used to calculate the hydrogen gas generation rate.

The hydrogen gas generation rate of the waste container is calculated from the measured hydrogen gas concentration using the following relationship:

$$C_g = X_H \, x \, L_{CF}$$

where,
C_g = the hydrogen gas generation rate (mole/sec)
X_H = the measured concentration of hydrogen gas in the waste container headspace (mole fraction)
L_{CF} = diffusion characteristic of the waste container filter.
The rate shall be compared to the appropriate limit for the content code. The container shall be qualified for shipment only if the limit is met.

Another method may also be used when the final waste form is a solid monolith of evaporated/solidified inorganic wastes (BC 312A or 314A) that will be directly placed into drums. Process controls will be used to ensure homogeneity of the sludge. A small sample of the waste will be analyzed for its gas

generation properties. The hydrogen gas generation rate for the drum can then be determined based on the mass of waste in the drum. For example, a sludge sample can be placed in a sealed test chamber of known volume. The concentration of hydrogen will be measured in the chamber after an elapsed period of time, and the following relationship will be used to calculate the hydrogen gas generation rate from the sample:

$$C_{g,\,sample} = \frac{X\ P\ V_{chamber}}{R\ T\ \Delta t}$$

where,

$C_{g,sample}$ = hydrogen gas generation rate from sample (mol/sec)
X = mole fraction hydrogen in the test chamber
P = absolute ambient pressure (atm)
$V_{chamber}$ = volume of the test chamber (L)
R = gas law constant (0.08206 atm L mol^{-1} K^{-1})
T = absolute ambient temperature (K)
)t = elapsed time (sec).

The hydrogen gas generation rate will be calculated on a drum basis using the following relationship:

$$C_{g,\,drum} = C_{g,\,sample}\,\frac{m_{drum}}{m_{sample}}$$

where,

$C_{g,drum}$ = hydrogen gas generation rate in drum (mol/sec)
m_{drum} = mass of waste form in drum (g)
m_{sample} = mass of sample (g).

The actual drum hydrogen gas generation rate will be compared to the maximum allowable hydrogen generation rate limit in Table 10-1 of this appendix.

Appendix 4.10.2.2

Compliance Methodology for TRU Waste From
Missouri University Research Reactor (MURR)
Columbia, MO

1.0 INTRODUCTION

This appendix presents how records and database information (process knowledge) have been used to qualify seven drums of Missouri University Research Reactor (MURR) contact-handled (CH) transuranic (TRU) waste as payload for transport in the CNS 10-160B cask. The methods for determining each restricted parameter, the factors influencing the parameter values, and the methods used by MURR for demonstrating compliance, are provided in the following sections.

This appendix also includes the following as attachments:

- Content code MR 121A (Attachment A)
- Chemical Lists for the above mentioned content code (Attachment A)
- Methods for Determining Gas Generation Rates and Decay Heat Values and summary of drum compliance (Attachment B).

2.0 PURPOSE

The purpose of this appendix is to describe the process knowledge used to qualify the CH-TRU waste belonging to MURR prior to transport in the CNS 10-160B cask. This appendix is based on the format and requirements for TRU waste identified in Appendix 4.10.2 of the CNS 10-160B cask Safety Analysis Report (SAR). It incorporates acceptable methods and process knowledge applicable to content code MR 121A described in this appendix.

Section 3.0 describes the TRU waste payload. Sections 4.0 through 11.0 discuss each payload parameter, and the process knowledge/methods employed to demonstrate compliance with the CNS 10-160B cask payload requirements.

3.0 TRU WASTE PAYLOAD FOR CNS 10-160B CASK

The content code for the CH-TRU waste from MURR (MR 121A—Solid Organic Waste) is provided in Attachment A. This content code refers to seven 55-gallon drums of solid organic waste from the MURR Transuranic Management by Pyropartitioning separation (TRUMP-S) program.

Complete documentation packages, along with quality assurance/quality control records, are generated for all payload containers as summarized in this appendix. TRU waste generated from the MURR will comply with all transportation requirements using the following methods:

- Formally documented acceptable knowledge (AK)/process knowledge of the processes generating the waste

- Data packages generated for all payload containers that document the contents and properties of the waste in the container including the absence of prohibited items and compliance with packaging requirements

- Measurement of required parameters to ensure compliance with limits.

4.0 PHYSICAL FORM

4.1 Requirements

The physical form of waste comprising the CNS 10-160B cask payload is restricted to solid or solidified materials in secondary containers. The total volume of residual liquid in a secondary container is restricted to less than 1% by volume. Secondary containers must be shored to prevent movement during accident conditions. Sharp or heavy objects in the waste shall be blocked, braced, or suitably packaged as necessary to provide puncture protection for the payload containers packaging these objects. Sealed containers greater than four liters in size are prohibited.

4.2 Methods of Compliance and Verification

Compliance with the physical form requirements is determined by records and data base information (process knowledge). Laboratory archive records include a list of the contents of each bag of waste. A review of this inventory indicate that the physical form requirements have been met. There is no liquid waste. Any liquid waste remaining after an experiment or activity was evaporated prior to bagging out of the glove box as waste as documented in procedure TAM-32, "Treatment of Aqueous Residue" (Reference 12.1). Waste packaging records show that sharp and heavy objects have been packaged to provide puncture protection equivalent to Type A packaging requirements, and there are no sealed or pressurized containers in the waste.

5.0 CHEMICAL FORM AND CHEMICAL PROPERTIES

5.1 Requirements

The chemical properties of the waste are determined by the chemical constituents allowed in a given content code. Specific requirements regarding the chemical form of the waste are as follows:

- Explosives, nonradioactive pyrophorics, compressed gases, and corrosives are prohibited.
- Pyrophoric radionuclides may be present only in residual amounts less than 1 weight percent.
- The total amount of potentially flammable volatile organic compounds (VOCs) present in the headspace of a secondary container is restricted to 500 parts per million.

5.2 Methods of Compliance and Verification

Compliance with the chemical form and chemical property restrictions is demonstrated through records and database information (process knowledge), chemical and physical inventory lists, and archived laboratory notebooks that describe process restrictions. No explosives were used in the experimental program. Lithium metal was the only non-radioactive pyrophoric used in the experiments. The excess lithium metal was oxidized in water, the solutions neutralized and evaporated to dryness. This solid was passed to the low-level waste stream. The plutonium and americium used in the TRUMP-S experimental program are contained in experimental residues in an oxidized state and are non-pyrophoric. Records indicate that no volatile organic materials were used in the experimental program and volatile organics are not present in the TRU waste. The chemical list for content code MR 121A is presented in Attachment A.

6.0 CHEMICAL COMPATIBILITY

6.1 Requirements

Each content code has an associated chemical list (Attachment A) based on AK information. Chemical constituents in a payload container assigned to a given content code shall conform to these approved chemical lists. Chemicals/materials that are not listed are allowed in trace amounts (quantities less than 1 weight percent) in a payload container provided that the total quantity of trace chemicals/materials is restricted to less than 5 percent (weight).

Chemical compatibility of a waste with its packaging ensures that chemical reactions will not occur that might pose a threat to the safe transport of a payload in the CNS 10-160B cask.

6.2 Methods of Compliance and Verification

Attachment B of Appendix 4.10.2 presents the methodology and results for the chemical compatibility analyses performed for the list of allowable chemicals/materials associated with the TRU waste content codes expected to be shipped in the CNS 10-160B cask. The results of these chemical compatibility analyses show that these content codes can be transported without any incompatibilities.

The chemicals present in MR 121A conform to the list of allowable materials in Attachment B of Appendix 4.10.2. Therefore, the waste meets the chemical compatibility requirements.

7.0 GAS DISTRIBUTION AND PRESSURE BUILDUP

7.1 Requirements

Gas distribution and pressure buildup during transport of TRU waste in the CNS 10-160B cask payload are restricted to the following limits:

- The gases generated in the payload must be controlled to prevent the occurrence of potentially flammable concentrations of gases within the payload confinement layers and the void volume of the inner vessel (IV) cavity. Specifically, hydrogen concentrations within the payload confinement layers are limited to 5 percent by volume during a maximum 60-day shipping period (see Attachment C of Appendix 4.10.2).

- The gases generated in the payload and released into the IV cavity must be controlled to maintain the pressure within the IV cavity below the acceptable packaging design limit of 31.2 pounds per square inch gauge (psig).

7.2 Methods of Compliance and Verification

Compliance with the CNS 10-160B cask design pressure limit for the MR 121A content code is analyzed by assuming that all gases generated are released into the IV cavity and by including the contributions from thermal expansion of gases and vapor pressure of atmospheric water.

Table 7-1 shows that the pressure increase during a period of 365 days is below the design pressure limit of 31.2 psig for MR 121A.

Table 7-1. Maximum Pressure Increase Over 365-Day Shipping Period

Content Code	G_{eff} (RT)[a]	Void Volume (Liters)	Activation Energy (kcal/mole)	Decay Heat Limit (Watts)	G_{eff}[b]	P_{max}[c] (psig)
MR 121A	8.1	1938	2.1	0.93	14.19	17.70

[a] G value for net gas (molecules per 100 eV) at room temperature (70°F).
[b] Effective G value (molecules per 100 eV) at maximum operating temperature of 168°F calculated using the Arrhenius equation for which activation energy is an input.
[c] Maximum pressure.

Compliance with the restrictions on flammable gas concentration is discussed in Section 10.0.

8.0 PAYLOAD CONTAINER AND CONTENTS CONFIGURATION

8.1 Requirements

Fifty-five-gallon drums are authorized payload containers in a CNS 10-160B cask. Up to ten 55-gallon drums of TRU waste may be packaged in the cask. Each 55-gallon drum to be packaged in the CNS cask must have a minimum of one filter vent. The minimum filter vent specifications for the seven 55-gallon drums of MR 121A are provided in Table 8-1.

Table 8-1. Minimum Filter Vent Specifications

Container/Filter Type	Filter Specification			
	Number of Vents Required per Container	Flow Rate (ml/min of air, STP, at 1 inch of water)[a]	Efficiency (percent)	Hydrogen Diffusivity (mol/s/mol fraction at 25°C)
Drum filter	1	35	99.5	3.70E-6
Filtered Bag	1	35	NA[b]	1.075E-5

[a] Filters tested at a different pressure gradient shall have a proportional flow rate (e.g., 35 ml/min at 1 inch of water = 1 L/min at 1 psi).
[b] Filters installed in containers that are overpacked are exempt from the efficiency requirement as the drum must exhibit a ≥99.5 percent efficiency.
NA = Not applicable.

Filter vents shall be legibly marked to ensure both (1) identification of the supplier and (2) date of manufacture, lot number, or unique serial number.

The rigid polyethylene liner, if present, in a payload container shall be punctured with a minimum of a 0.3-inch diameter hole before the container is transported in the CNS 10-160B.

8.2 Methods of Compliance and Verification

Compliance with the payload container and contents configuration requirements is determined by visual examination, process knowledge and through procurement records. The MURR TRU waste is packaged within two layers of plastic, one inner plastic waste bag, and one filtered drum liner bag. The plastic bags are closed by the twist and tape method (i.e., not heat-sealed). The individual bags are placed in 55-gallon drums with a filter vent installed on each drum that meets the minimum filter vent specifications for the 55-gallon drums listed in Table 8-1. Procurement documents for the 55-gallon drums, lids, rigid liners, and filters are included in MURR archives indicating compliance with the requirements. Prior to transport, payload container filter vents shall be visually inspected for damage or defect. If a defect is identified, a nonconformance report shall be issued and the payload container shall be returned for repackaging/filter replacement prior to certification.

9.0 ISOTOPIC CHARACTERIZATION AND FISSILE CONTENT

9.1 Requirements

The CNS 10-160B cask payload allows 325 FGE of fissile materials. Plutonium content in excess of 0.74 TBq (20 curies) per cask must be in solid form.

9.2 Methods of Compliance and Verification

The CH-TRU waste was generated over eight years using a total of 3.5627 grams of Neptunium-237, 1.4701 grams of Plutonium-239, 2.4125 grams of Americium-241 and 6.097 grams of depleted Uranium. Attachment B shows the gram loading of each drum. This is the total mass of each actinide assigned to MURR TRU waste. No other fissile materials were introduced into the waste. Small quantities of these materials were dispersed in the low-level waste, as well.

10.0 DECAY HEAT AND HYDROGEN GAS GENERATION RATES

This section describes the logic and methodology used in evaluating payload characteristics that meet the hydrogen gas concentration requirement for the MR 121A content code wastes described in this section.

10.1 Requirements

The hydrogen gas concentration shall not exceed 5% by volume in all void volumes within the CNS 10-160B cask payload during a 60-day shipping period. A CNS 10-160B cask payload must be assembled of payload containers belonging to the same content code. Payload containers of different content codes with different bounding G values and resistances may be assembled together as a payload, provided the decay heat limit and hydrogen gas generation rate limit for all payload containers within the payload is conservatively assumed to be the same as that of the payload container with the lowest decay heat limit and hydrogen gas generation rate limit.

10.2 Methodology of Ensuring Compliance with Flammable Gas Concentration Limits

As stated in Section 7.2 of Appendix 4.10.2 of the CNS 10-160B SAR, chemical, biological, and thermal gas generation mechanisms are insignificant in the CNS 10-160B cask. In addition, as shown in Section 5.1 of Appendix 4.10.2, potentially flammable VOCs are restricted to 500 ppm in the headspace of the CNS 10-160B cask secondary containers. Therefore, the only flammable gas of concern for transportation purposes is hydrogen. The concentration of hydrogen within any void volume in a layer of

confinement of the payload or in the cask IV has been evaluated during a 60-day shipping period (see Attachment C of Appendix 4.10.2).

Attachment A provides the MR 121A content code authorized payload for the CNS 10-160B cask. This content code has a unique and completely defined packaging configuration. Modeling the movement of hydrogen from the waste material to the payload voids, using the release rates of hydrogen through the various confinement layers, defines the relationship between generation rate and void concentration. This modeling allows determination of the maximum allowable hydrogen generation rate for the MR 121A content code to meet the 5% concentration limit, as detailed in Section 10.3. Based on hydrogen gas generation potential, quantified by hydrogen gas generation G values, the gas concentration limit can be converted to a decay heat limit, as detailed in Section 10.4. The maximum allowable hydrogen generation rate and decay heat limit for the MR 121A content code for MURR waste are listed in Table 10-1 (see Attachment A of Appendix 4.10.2 for a description of the Matrix Depletion Program and dose-dependent G values).

Table 10-1. Maximum Allowable Hydrogen Gas Generation Rate and Decay Heat Limit for MR 121A

Content Code	Maximum Allowable Hydrogen Gas Generation Rate, mole/second/drum	Maximum Allowable Hydrogen Gas Generation Rate, moles/second/cask	Maximum Allowable Decay Heat Limit, Watts/Drum (Dose <= 0.012 watt*year)	Maximum Allowable Decay Heat Limit, Watts/Cask (Dose <= 0.012 watt*yr)	Maximum Allowable Decay Heat Limit, Watts/Drum (Dose > 0.012 watt*year)	Maximum Allowable Decay Heat Limit, Watts/Cask (Dose > 0.012 watt*year)
MR121A	1.323E-8	1.323E-7	0.032	0.320	0.093	0.930

10.3 Determination of Maximum Allowable Hydrogen Generation Rate

The maximum allowable hydrogen generation rate was determined using the modeling methodology described in Appendix 4.10.2 and the following input parameters.

Waste Packaging Configuration and Release Rates: The waste described by content code MR 121A, is packaged within two layers of plastic, one plastic inner bag, and one filtered drum liner bag. The plastic bags are closed by the twist and tape method. The bags are placed inside a polyethylene rigid liner punctured with a minimum 0.3-inch diameter hole. The liner would then be placed directly into a 55-gallon drum with a filter vent installed on each drum meeting the minimum filter vent specifications for the 55-gallon drums listed in Table 8-1. The release rates in Table 10-2 are shown for two different temperatures (minimum and maximum operating temperature of the 10-160B) and are based on values for various waste packaging confinement layers documented in Appendices 3.6.9 and 3.6.12 of the TRUPACT-II SAR (Reference 12.2). The temperature dependence of these release rates is discussed later in this section.

Void Volume in the 10-160B IV: The cask will have a payload of 10 drums and a drum carriage. The interior volume of the cask, V_{cask}, is 4438 liters. The volume occupied by the drum carriage, $V_{carriage}$, is 143.2 liters. The external volume of a single drum, V_{drum}, is 235.7 liters. The void volume within the cask is calculated as:

$$V_{void} = V_{cask} - V_{carriage} - 10\ V_{drum}$$

$$V_{void} = 4{,}438\ liters - 143.2\ liters - 10\ (235.7\ liters)$$

$$V_{void} = 1{,}938\ liters$$

Table 10-2. Release Rates of Hydrogen Across Confinement Layers for MR 121A

Confinement Layer	Release Rate (mol/sec/mol fraction)	
	T = 233K	T = 348.6K
Plastic Inner Bag (twist-and-tape closure)	3.895×10^{-7}	5.58×10^{-7} [a]
Filtered Liner Bag (twist-and-tape closure)	7.156×10^{-6}	1.447×10^{-5} [b]
Rigid Polyethylene Drum Liner (0.3-inch diameter hole)	4.683×10^{-5}	5.09×10^{-5}
Drum Filter	2.46×10^{-6}	4.98×10^{-6}

[a] The value at 70°F is conservatively used.
[b] The value at -20°F is conservatively used.

Pressure: The pressure is assumed to be isobaric and equal to one atmosphere. The mole fraction of hydrogen in each void volume would be smaller if pressurization is considered and would result in a greater maximum allowable hydrogen gas generation rate. Furthermore, the amount of hydrogen gas generated during a 60-day shipping period would be negligible compared to the quantity of air initially present at the time of sealing the CNS 10-160B cask.

Temperature: The input parameter affected by temperature is the release rate through the different confinement layers in the payload containers and the G values for hydrogen. Release rates increase with increasing temperature as documented in Appendix 3.6.12 of the TRUPACT-II SAR (Reference 12.2). Therefore, the minimum release rates would be those at the lowest operating temperature. These are the release rates indicated in Table 10-2 for 233K. The minimum decay heat limits are determined by the ratio of the release rates and the G values. In other words, the higher the release rates, the higher the decay heat limit; the higher the G value, the lower the decay heat limit. The dependence of G values on temperature is documented in Section 10.4. For determining the decay heat limit, the temperature that yielded the minimum decay heat limit was used as the input parameter.

In summary, the temperature dependence of the input parameters was accounted for in the calculation so that, in each case, the minimum possible limit (hydrogen generation rate or decay heat limit) was obtained. This provides an additional margin of safety in the analysis.

10.4 Determination of Maximum Allowable Decay Limit

The maximum allowable decay heat limit for the CH-TRU waste content code, MR 121A, was calculated using the methodology described in Appendix 4.10.2 and the content code-specific G values described below.

G values are determined based on the bounding materials present in the payload. The maximum operating temperature yields the lowest decay heat limits for the operating temperature range of the CNS 10-160B cask. This content code represents solid organic debris consisting of various combustible and non-combustible items. The material present in this waste with the highest G value at the maximum operating temperature of the CNS 10-160B cask (168°F) is cellulosics and is therefore considered as the bounding material. The G value for hydrogen associated with cellulosics is 3.2 molecules/100eV (at 70°F) if the attained dose is less than or equal to 0.012 watt*year. The dose dependent G value for cellulosics is 1.09 molecules/100 eV if the dose attained in the drum is greater than 0.012 watt*yr. The methodology associated with the determination of dose-dependent G values pursuant to the Matrix Depletion Program is further discussed in Attachment A of Appendix 4.10.2. The G values at 70°F are adjusted to the maximum operating temperature of the CNS 10-160B cask (168°F) using the Arrhenius equation. The activation energy of the G value for cellulosics is 2.1 kcal/mole. Thus, at the maximum operating temperature of the CNS 10-160B cask (168°F), the bounding hydrogen G values for MR 121A are 5.61 molecules/100 eV (dose ≤ 0.012 watt*year) and 1.91 molecules/100 eV (dose > 0.012 watt*year).

Demonstration of compliance of the MURR TRU waste with the decay heat and hydrogen gas generation rate limits is shown in Attachment B.

10.5 Methodology for Compliance with Payload Assembly Requirements

The MURR TRU waste payload consists of 7 55-gallon drums of the same content code meeting the payload assembly requirements.

11.0 WEIGHT

11.1 Requirements

The weight limit for the contents of the loaded cask is 14,500 pounds.

11.2 Methods of Compliance and Verification

The total weight of the TRU waste is 175 pounds, which will be distributed among the seven drums. This does not include the weight of the drums themselves, lids and filter vents, and any other bracing material required inside the drum. Each drum will be weighed prior to shipping. Based on the total measured weight of the individual payload containers and the 3 dunnage drums needed to complete the 10-drum payload, the MURR shall calculate total assembly weight and evaluate compliance with the maximum cask payload weight limit.

12.0 REFERENCES

12.1 University of Missouri, “Treatment of Aqueous Residue,” TAM-32, University of Missouri Research Reactor TRUMP-S Program, Columbia, Missouri.

12.2 U.S. Department of Energy (DOE), "Safety Analysis Report for the TRUPACT-II Shipping Package," and associated TRUPACT-II Authorized Methods for Payload Control (TRAMPAC) Current Revision, U.S. Department of Energy Carlsbad Field Office, Carlsbad, New Mexico.

Attachment A

MR 121A Transuranic Content Code and Chemical List
for Missouri University Research Reactor

CONTENT CODE: MR 121A

CONTENT DESCRIPTION: Solid Organic Waste – CH-TRU Waste

WASTE DESCRIPTION: This waste consists of a variety of combustible and noncombustible items.

GENERATING SOURCES: This waste is generated from activities supporting the Missouri University Research Reactor (MURR) Transuranic Management by Pyropartitioning Separation (TRUMP-S) program.

WASTE FORM: The waste consists of lab ware waste that includes glove box gloves, poly vials, glass laboratory apparatus, paper towels, tools, polyethylene bags, rubber gloves o-rings, wires, crucibles: all exposed to metallic actinides, salts containing actinides, or aqueous solutions containing actinides.

WASTE PACKAGING: The waste described by content code MR 121A, is packaged within two layers of plastic, one intact waste inner bag, and one filtered drum liner bag. The plastic bags are closed by the twist and tape method. The bags may be placed inside a rigid polyethylene liner punctured with a minimum 0.3-inch diameter hole. The liner would then be placed directly in a 55-gallon drum with a filter vent installed on each drum. Ten drums will then be placed into the CNS 10-160B cask.

METHODS FOR DETERMINATION OF ISOTOPIC CHARACTERIZATION: The isotopic composition of the waste is determined from measurements taken on the product material during the processing at the site. The processing organizations transmit the isotopic composition information to the site waste certification organization. Therefore, the isotopic composition of the waste need not be determined by direct analysis or measurement of the waste unless process information is not available.

FREE LIQUIDS: Liquid waste is prohibited in the drums except for residual amounts in well-drained containers. The total volume of residual liquid in a payload container shall be less than 1 volume percent of the payload container. Waste packaging procedures ensure that free liquids are less than 1 volume percent of the payload container.

EXPLOSIVE/COMPRESSED GASES: Explosives and compressed gases in the payload containers are prohibited by waste packaging procedures.

PYROPHORICS: Lithium metal was the only non-radioactive pyrophoric used in the experiments. The excess lithium metal was oxidized in water, the solutions neutralized and evaporated to dryness. This solid was passed to the low-level waste stream. The plutonium and americium used in the TRUMP-S experimental program are contained in experimental residues in an oxidized state and are non-pyrophoric.

CORROSIVES: Corrosives are prohibited in the payload container. Acids and bases that are potentially corrosive shall be neutralized and rendered noncorrosive prior to being a part of the waste. The physical form of the waste and the waste generating procedures ensure that the waste is in a nonreactive form.

CHEMICAL COMPATIBILITY: A chemical compatibility study has been performed on this content code, and all waste is chemically compatible for materials in greater than trace (>1% by weight) quantities.

ADDITIONAL CRITERIA: Each drum is fitted with a minimum of one filter vent.

MAXIMUM ALLOWABLE HYDROGEN GENERATION RATES - OPTION 1: The maximum allowable hydrogen generation rate limit is 1.323E-08 moles per second per drum and 1.323E-07 moles per second per CNS 10-160B cask.

MAXIMUM ALLOWABLE DECAY HEAT LIMIT - OPTION 2: The maximum allowable decay heat limit is 0.032 watts per drum and 0.32 watts per CNS 10-160B cask if dose ≤ 0.012 watt*yr and 0.093 watts per drum and 0.93 watts per CNS 10-160B cask if dose > 0.012 watt*yr.

MISSOURI UNIVERSITY RESEARCH REACTOR CONTENT CODE MR 121A
SOLID ORGANIC WASTE
MATERIALS AND CHEMICALS >1%

CARDBOARD
CELLULOSICS
CLOTH
CONCRETE
DIATOMACEOUS EARTH (FLOOR DRY)
DIRT
EQUIPMENT (including vacuum cleaner, motors, and dosimeter system)
FILTERS
GLASS
METALS (including mercury, brass, lead shielding, lead shot, silver, stainless steel, aluminum, iron, copper beryllium, and zirconium)
OTHER INORGANICS
PAINT CHIPS (including barium, cadmium, chromium, and lead)
PAPER
PLASTER-OF-PARIS
PLASTIC
PLEXIGLAS
RADSORB
RUBBER
SOIL
WOOD

Attachment B

Methodology for Determination of Decay Heats
and Hydrogen Gas Generation Rates for
MR 121A Content Code
for Missouri University Research Reactor

The mass of each isotope assigned to each of the seven drums of content code MR 121A is listed in Table B-1 below. These mass numbers are from the total mass of each isotope computed in this section. The numerical values of the decay heat in watts per gram for each isotope are from Table 3-1 of the TRUPACT-II TRAMPAC (Reference 12.2). The computed decay heat for each isotope and the total decay heat for each of the seven drums is given in Table B-1, below. U-238 is not included in the table because its contribution to the decay heat is insignificant.

Table B-1 Mass and Decay Heat per Isotope, by Drum

Isotope	Mass (g)	Decay Heat (watts/g)	Decay Heat (watts/isotope)
Drum No. 1			
Np-237	2.1706	2.09E-05	4.537E-05
Pu-239	0.2282	1.95E-03	4.450E-04
Am-241	0.3431	1. 16 E-0 1	3.980E-02
Drum Decay Heat (watts/Drum)			4.029E-02
Drum No. 2			
Np-237	0.0381	2.09E-05	7.963E-07
Pu-239	0.6725	1.95E-03	1.311 E-03
Am-241	0.2957	1.16E-01	3.430E-02
Drum Decay Heat (watts/Drum)			3.561 E-02
Drum No. 3			
Np-237	0.1191	2.09E-05	2.489E-06
Pu-239	0.1036	1.95E-03	2.020E-04
Am-241	0.3469	1.16E-01	4.024E-02
Drum Decay Heat (watts/Drum)			4.044E-02
Drum No. 4			
Np-237	0.0199	2.09E-05	4.159E-07
Pu-239	0.1702	1.95E-03	3.319E-04
Am-241	0.3474	1.16E-01	4.030E-02
Drum Decay Heat (watts/Drum)			4.063E-02
Drum No. 5			
Np-237	0.4979	2.09E-05	1.041E-05
Pu-239	0.1554	1.95E-03	3.030E-04
Am-241	0.3521	1.16E-01	4.084E-02
Drum Decay Heat (watts/Drum)			4.115E-02
Drum No. 6			
Np-237	0.443	2.09E-05	9.259E-06
Pu-239	0	1.95E-03	0.000E+00
Am-241	0.3527	1.16E-01	4.091E-02
Drum Decay Heat (watts/Drum)			4.092E-02
Drum No. 7			
Np-237	0.268	2.09E-05	5.601 E-06
Pu-239	0.1459	1.95E-03	2.845E-04
Am-241	0.3747	1.16E-01	4.347E-02
Drum Decay Heat (watts/Drum)			4.376E-02

Error Assignment for Decay Heat Calculation

It is required that an error be assigned to the calculated decay heat for each payload container and to the entire payload. The error in actinide mass assigned to each waste bag is the source of error in the decay heat calculation. The inventory controls on the special nuclear materials used in the TRUMP-S project are the following TAM Procedures.

- TAM-21 "Transfer of Actinides"
- TAM-23 "Inventory Control of Actinides"
- TAM-24 "Quality Assurance"
- TAM-25 "Mixed Actinide Inventory"

The analytical balance used in the experiments was capable of ± 0.1 mg precision. The balance was standardized to ± 1.0 mg before every transfer of actinides into the glove box. This procedure assured the performance of the balance during experiments. This balance was used to assign actinide mass to all experimental materials assigned to waste bags at the conclusion of each experiment. Using these procedures, the SNM inventory for the eight years of the project closed to within 0.0079 g for americium, 0.0038 g for plutonium and 0.0007 g for neptunium.

Based on these procedures and the SNM inventory record, it is conservative to assume that the mass of actinide in each bag is known to ±1.0 mg. If it is further assumed that all of the mass is americium, which has a significantly higher decay heat than the other actinides, the error in the decay heat calculation will be ±1.16 x 10-4 watt/bag. The maximum number of waste bags assigned to any drum is six, so the maximum error in the decay heat will be 6.96 x 10-4 watt/drum. Drum 7 has the highest decay heat, of 0.04376 watt; with an added error of 0.000696 watt, the maximum decay heat for any drum would be 0.044456 watt. It can be concluded that all drums are below the decay heat limit of 0.093 watt/drum if the dose > 0.012 watt*year. Since each drum is below the decay heat, including error in the decay heat calculation, the payload decay heat will also be below the payload decay heat limit. For the entire 10-160B payload assembly of seven drums of waste and three dunnage drums (see Section 11.0), the total 10-160B payload will have a decay heat value of 0.2828 watts (including error) and therefore is less than the payload assembly limit of 0.93 watts (computed as 10 drums at 0.093 watt per drum) if dose per drum > 0.012 watt*year.

Appendix 4.10.2.3

Compliance Methodology for TRU Waste From
Energy Technology Engineering Center (ETEC)

1.0 INTRODUCTION

This appendix presents acceptable methods of preparation and characterization to qualify drums of Energy Technology Engineering Center (ETEC) contact-handled (CH) transuranic (TRU) and remote-handled (RH) TRU waste, as defined by the U.S. Department of Energy (DOE) (Reference 12.1), as payload for transport in the CNS 10-160B cask. The methods for determining or measuring each restricted parameter, the factors influencing the parameter values, and the methods used by ETEC for demonstrating compliance, are provided in the following sections.

This appendix also includes the following as attachments:

- Content codes ET 121A, ET 121B, ET 126A, ET 126B, ET 325A, ET 325B, and ET 326A (Attachment A)
- Chemical Lists for the above mentioned content codes (Attachment A).

2.0 PURPOSE

The purpose of this appendix is to describe the acceptable methods that shall be used to prepare and characterize the CH-TRU and RH-TRU waste belonging to ETEC in order to demonstrate compliance with the TRU waste payload requirements prior to transport in the CNS 10-160B cask. This appendix is based on the format and requirements for TRU waste identified in Appendix 4.10.2 of the CNS 10-160B cask Safety Analysis Report (SAR). It incorporates acceptable methods applicable to the content codes listed in Attachment A.

Section 3.0 describes the TRU waste payload for ETEC. Sections 4.0 through 11.0 discuss each payload parameter and the method(s) for demonstrating compliance with the CNS 10-160B cask payload requirements being employed by ETEC.

3.0 TRU WASTE PAYLOAD FOR CNS 10-160B CASK

The CH-TRU waste is classified into four content codes, ET 121A, ET 121B, ET 126A and ET 126B. The RH-TRU waste is classified into three content codes, ET 325A, ET 325B and ET 326A. These content codes describe the TRU waste materials in terms of processes generating the waste, the packaging methods used in the waste container(s), and the generating site. The ETEC content codes for the CH-TRU and RH-TRU waste from ETEC are provided in Attachment A.

ETEC has developed formal procedures that ensure the generation, packaging, and repackaging of waste under rigorous controls. To demonstrate compliance with the payload requirements, complete documentation packages, along with quality assurance/quality control records, are generated for all payload containers. TRU waste generated from the ETEC will comply with all transportation requirements using the following methods:

- Formally documented acceptable knowledge (AK)/process knowledge of the processes generating and packaging the waste
- Data packages generated for all payload containers that document the contents and properties of the waste in the container
- Measurement of required parameters to ensure compliance with limits.

4.0 PHYSICAL FORM

4.1 Requirements

The physical form of waste comprising the CNS 10-160B cask payload is restricted to solid or solidified materials in secondary containers. The total volume of residual liquid in a secondary container is restricted to less than 1% by volume. Secondary containers must be shored to prevent movement during accident conditions. Sharp or heavy objects in the waste shall be blocked, braced, or suitably packaged as necessary to provide puncture protection for the payload containers packaging these objects. Sealed containers greater than four liters in size are prohibited.

4.2 Methods of Compliance and Verification

The waste consists primarily of inorganic and organic debris, homogeneous material (fines) with a small organic component, and a small quantity of solidified oils. The oils were collected during decontamination and decommissioning activities and were solidified using Petroset-II during repackaging. The contents of each waste container were recorded on lot followers during packaging or repackaging according to approved procedures that precluded prohibited items. Unique numbers were used to identify the waste containers, their contents, and their associated lot followers, and to track post-packaging activities.

The contents of the ET 121A, ET 121B, ET 126A, ET 126B, ET 325A and ET 325B waste stream containers were verified using computed tomography (CT). One prohibited item was found and removed. Waste stream ET 326A is a remote-handled homogeneous waste, and randomly selected 1-gal cans from that waste stream were opened for content verification and sampling for radiological and chemical characterization.

5.0 CHEMICAL FORM AND CHEMICAL PROPERTIES

5.1 Requirements

The chemical properties of the waste are determined by the chemical constituents allowed in a given content code. Specific requirements regarding the chemical form of the waste are as follows:

- Explosives, nonradioactive pyrophorics, compressed gases, and corrosives are prohibited
- Pyrophoric radionuclides may be present only in residual amounts less than 1 weight percent
- The total amount of potentially flammable volatile organic compounds (VOCs) present in the headspace of a secondary container is restricted to 500 parts per million (ppm).

5.2 Methods of Compliance and Verification

For repackaged waste, the contents of repackaged containers were closely examined during the repackaging process to ensure the absence of explosives, pyrophorics, compressed gases, and corrosives. CT results were used to verify the absence of prohibited items.

For containers not undergoing repackaging, the absence of explosives, pyrophorics, compressed gases, and corrosives was verified by analysis of CT results or random sampling (e.g., the 1 –gallon cans of drain line residue, a homogeneous waste).

Compliance with the 500 ppm limit on flammable VOCs is demonstrated through acceptable knowledge/process knowledge of the processes generating and packaging the waste. The debris waste streams (i.e. content codes ET 121A, ET 121B, ET 325A and ET 325B) have no VOC contributing contents. Solvents used in the solidification process of the solidified oil waste stream (i.e. content codes ET 126A and ET 126B) are locked up in the solidification medium and will not exceed the 500 ppm limit. VOC analyses were performed for a large, representative set of samples from the drain line residue waste streams (ET 326A) and no VOCs were detected.

6.0 CHEMICAL COMPATIBILITY

6.1 Requirements

Each content code has an associated chemical list (Attachment A) based on process knowledge. Chemical constituents in a payload container assigned to a given content code shall conform to these approved chemical lists. Chemicals/materials that are not listed are allowed in trace amounts (quantities less than 1 percent [weight]) in a payload container provided that the total quantity of trace chemicals/materials is restricted to less than 5 percent (weight).

Chemical compatibility of a waste with its packaging ensures that chemical reactions will not occur that might pose a threat to the safe transport of a payload in the CNS 10-160B cask.

6.2 Methods of Compliance and Verification

Attachment B of Appendix 4.10.2 presents the methodology and results for the chemical compatibility analyses performed for the list of allowable chemicals/materials associated with the TRU waste content codes expected to be shipped in the CNS 10-160B cask. The results of these chemical compatibility analyses show that these content codes can be transported without any incompatibilities. The chemicals present in the ETEC content codes conform to the list of allowable materials in Attachment B of Appendix 4.10.2. Therefore, the waste meets the chemical compatibility requirements.

7.0 GAS DISTRIBUTION AND PRESSURE BUILDUP

7.1 Requirements

Gas distribution and pressure buildup during transport of TRU waste in the CNS 10-160B cask payload are restricted to the following limits:

- The gases generated in the payload must be controlled to prevent the occurrence of potentially flammable concentrations of gases within the payload confinement layers and the void volume of the inner vessel (IV) cavity. Specifically, hydrogen concentrations within the payload confinement layers are limited to 5 percent by volume during a maximum 60-day shipping period (see Attachment C of Appendix 4.10.2).

- The gases generated in the payload and released into the IV cavity must be controlled to maintain the pressure within the IV cavity below the acceptable packaging design limit of 31.2 pounds per square inch gauge (psig).

7.2 Methods of Compliance and Verification

Compliance with the CNS 10-160B cask design pressure limit for the ETEC content codes is analyzed by assuming that all gases generated are released into the IV cavity and by including the contributions from thermal expansion of gases and vapor pressure of atmospheric water.

Table 7-1 shows that the pressure increase during a period of 365 days is below the design pressure limit of 31.2 psig for all the ETEC content codes.

Table 7-1. Maximum Pressure Increase Over 365-Day Shipping Period

Content Code	G_{eff} (RT)[a]	Void Volume (Liters)	Activation Energy (kcal/mole)	Decay Heat Limit (Watts)	G_{eff}[b]	P_{max}[c] (psig)
ET 121A	8.1	1938	2.1	0.57	14.19	14.07
ET 121B	8.1	1938	2.1	2.26	14.19	31.13
ET 126A	4.1	1938	0.8	0.21	5.08	9.08
ET 126B	4.1	1938	0.8	0.95	5.08	11.75
ET 325A	8.1	1938	2.1	1.07	14.19	19.12
ET 325B	8.1	1938	2.1	2.26	14.19	31.13
ET 326A	2.05	1938	0.8	5.91	2.54	18.99

[a] G value for net gas (molecules per 100 eV) at room temperature (70°F).
[b] Effective G value (molecules per 100 eV) at maximum operating temperature of 168°F calculated using the Arrhenius equation for which activation energy is an input.
[c] Maximum pressure.

Compliance with the restrictions on flammable gas concentration is discussed in Section 10.0.

8.0 PAYLOAD CONTAINER AND CONTENTS CONFIGURATION

8.1 Requirements

Fifty-five-gallon drums are authorized payload containers in a CNS 10-160B cask. Up to ten 55-gallon drums of TRU waste may be packaged in the cask. Each 55-gallon drum to be packaged in the CNS cask must have a minimum of one filter vent. The minimum filter vent specifications for the 55-gallon drums of ETEC waste are provided in Table 8-1.

The test methods used to determine the compliance of filter vents with the performance-based requirements of flow rate, efficiency, and hydrogen diffusivity shall be directed by procedures under a quality assurance program.

Filter vents shall be legibly marked to ensure both (1) identification of the supplier and (2) date of manufacture, lot number, or unique serial number.

Table 8-1. Minimum Filter Vent Specifications

Container Type	Filter Specification			
	Number of Vents Required per Container	Flow Rate (ml/min of air, STP, at 1 inch of water)[a]	Efficiency (percent)	Hydrogen Diffusivity (mol/s/mol fraction at 25°C)
Drum	1	35	99.5	3.70E-6
Filtered Bag	1	35	NA[b]	1.075E-5

[a] Filters tested at a different pressure gradient shall have a proportional flow rate (e.g., 35 ml/min at 1 inch of water = 1 L/min at 1 psi).
[b] Filters installed in containers that are overpacked are exempt from the efficiency requirement as the drum must exhibit a ≥ 99.5 percent efficiency.

The rigid polyethylene liner, if present, in a payload container shall be punctured with a minimum of a 0.3-inch diameter hole before the container is transported in the CNS 10-160B.

8.2 Methods of Compliance and Verification

Compliance with the payload container and contents configuration requirements is determined by visual observation, process knowledge, procurement records, and repackaging activities that ensure compliance. For content codes ET 121A, and ET 126A the waste is packaged directly into two plastic inner bags closed by the twist and tape method and then placed into a 55-gallon drum. For content code ET 325A, the waste is packaged in up to two plastic inner bags. The first bag (if present) may be closed by the twist and tape method and the second bag is vented/filtered. For content codes ET 121B, ET 126B, and ET 325B, the waste is packaged directly into two plastic inner bags both of which are vented/filtered and then placed into a 55-gallon drum. The bags may be placed inside a rigid polyethylene liner punctured with a minimum 0.3 inch diameter hole. The liner would then be placed directly inside a 55-gallon drum with a filter vent installed on each drum. For ET 326A, the waste is packaged directly into 55-gallon drums or will be packaged in closed 1-gallon paint cans that may be placed in larger metal cans that allow free transport of gas. The larger metal cans may be placed inside a rigid polyethylene liner punctured with a minimum 0.3-inch diameter hole. The liner would then be placed directly inside a 55-gallon drum installed with a filter vent. The drums may be lined with thick annular concrete shields. Bottom and top concrete shields plus thick steel lids may also be used inside the drums. Inner containers greater than 4 liters in volume are punctured or vented to allow free gas release. Up to ten drums of waste will then be placed into the CNS 10-160B cask.

The requirements for the rigid liner and filter vent shall be controlled administratively or by puncturing the lids during repackaging activities and visually inspecting them prior to drum closure.

9.0 ISOTOPIC CHARACTERIZATION AND FISSILE CONTENT

9.1 Requirements

The CNS 10-160B cask payload allows 325 FGE of fissile materials. Plutonium content in excess of 0.74 TBq (20 curies) per cask must be in solid form.

9.2 Methods of Compliance and Verification

The isotopic composition of the waste is derived from several sources, using a number of different procedures, depending upon the waste stream generation process and available historical information. It is derived from historical counting data and survey information for waste from nuclear fuel development activities; from a combination of survey data, decay-plus-ingrowth analysis, and the known initial fuel composition for decladding waste from a single spent fuel source; and by extensive sampling and radiological analysis for other materials.

10.0 DECAY HEAT AND HYDROGEN GAS GENERATION RATES

This section describes the logic and methodology used in evaluating payload characteristics that meet the hydrogen gas concentration requirement for the ETEC content codes described in this section.

10.1 Requirements

The hydrogen gas concentration shall not exceed 5% by volume in all void volumes within the CNS 10-160B cask payload during a 60-day shipping period. A CNS 10-160B Cask payload must be assembled of payload containers belonging to the same content code. Payload containers of different content codes with different bounding G values and resistances may be assembled together as a payload, provided the decay heat limit and hydrogen gas generation rate limit for all payload containers within the payload is conservatively assumed to be the same as that of the payload container with the lowest decay heat limit and hydrogen gas generation rate limit.

10.2 Methodology of Ensuring Compliance with Flammable Gas Concentration Limits

As stated in Section 7.2 of Appendix 4.10.2, chemical, biological, and thermal gas generation mechanisms are insignificant for the ETEC waste streams in the CNS 10-160B cask. In addition, as shown in Section 5.1 of Appendix 4.10.2, potentially flammable VOCs are restricted to 500 ppm in the headspace of the CNS 10-160B cask secondary containers. Therefore, the only flammable gas of concern for transportation purposes is hydrogen. The concentration of hydrogen within any void volume in a layer of confinement of the payload or in the cask IV has been evaluated during a 60-day shipping period (see Attachment C of Appendix 4.10.2).

Attachment A provides the ETEC content codes authorized as payload for the CNS 10-160B cask. Each content code has a unique and completely defined packaging configuration. Modeling the movement of hydrogen from the waste material to the payload voids, using the release rates of hydrogen through the various confinement layers, defines the relationship between generation rate and void concentration. This modeling allows determination of the maximum allowable hydrogen generation rate for the ETEC content codes to meet the 5% concentration limit, as detailed in Section 10.3. Based on hydrogen gas generation potential, quantified by hydrogen gas generation G values, the gas concentration limit can be converted to a decay heat limit, as detailed in Section 10.4. The maximum allowable hydrogen generation rate and decay heat limits for the ETEC content codes are listed in Table 10-1 (see Attachment A of Appendix 4.10.2 for a description of the Matrix Depletion Program and dose-dependent G values).

10.3 Determination of Maximum Allowable Hydrogen Generation Rate

The maximum allowable hydrogen generation rates were determined using the modeling methodology described in Appendix 4.10.2 and the following input parameters.

Waste Packaging Configuration and Release Rates: For content codes ET 121A, and ET 126A the waste is packaged directly into two plastic inner bags closed by the twist and tape method and then placed into a 55-gallon drum. For content code ET 325A, the waste is packaged in up to two plastic inner bags. The first bag (if present) may be closed by the twist and tape method and the second bag is vented/filtered. For content codes ET 121B, ET 126B, and ET 325B, the waste is packaged directly into two plastic inner bags both of which are vented/filtered and then placed into a 55-gallon drum. The bags may be placed inside a rigid polyethylene liner punctured with a minimum 0.3 inch diameter hole. The liner would then be placed directly inside a 55-gallon drum with a filter vent installed on each drum. For ET 326A the waste is packaged directly into 55-gallon drums or will be packaged in closed 1-gallon paint cans that may be placed in larger metal cans that allow free transport of gas. The larger metal cans may be placed inside a rigid polyethylene liner punctured with a minimum 0.3-inch diameter hole. The liner would then be placed directly inside a 55-gallon drum installed with a filter vent. The drums may be lined with thick annular concrete shields. Bottom and top concrete shields plus thick steel lids may also be used inside the drums. Inner containers greater than 4 liters in volume are punctured or vented to allow free gas release. Up to ten drums of waste will then be placed into the CNS 10-160B cask.

Table 10-1. Maximum Allowable Hydrogen Gas Generation Rates, Decay Heat Limits, and Total Activity Limits

Content Code	Maximum Allowable Hydrogen Gas Generation Rate, mole/second/ drum	Maximum Allowable Hydrogen Gas Generation Rate, moles/second/ cask	Maximum Allowable Decay Heat Limit, Watts/ Drum (Dose <= 0.012 watt*year)	Maximum Allowable Decay Heat Limit, Watts/Cask (Dose <= 0.012 watt*yr)	Maximum Allowable Decay Heat Limit, Watts/ Drum (Dose > 0.012 watt*year)	Maximum Allowable Decay Heat Limit, Watts/ Cask (Dose > 0.012 watt*year)
ET 121A	8.054E-9	8.054E-8	0.019	0.19	0.057	0.57
ET 121B	3.697E-8	3.697E-7	0.086	0.86	0.252	2.26
ET 126A	8.054E-9	8.054E-8	0.021	0.21	0.021	0.21
ET 126B	3.697E-8	3.697E-8	0.095	0.95	0.095	0.95
ET 325A	1.323E-8	1.323E-7	0.038	0.38	0.107	1.07
ET 325B	3.697E-8	3.697E-7	0.104	1.04	0.290	2.26
ET 326A	4.659E-8	4.659E-7	0.239	2.39	0.591	5.91

The release rates in Table 10-2 are shown for two different temperatures (minimum and maximum operating temperature of the CNS 10-160B) and are based on release rate values for various waste packaging confinement layers documented in Appendices 3.6.9 and 3.6.12 of the TRUPACT-II SAR (Reference 12.2). The temperature dependence of these release rates is discussed later in this section.

Void Volume in the 10-160B IV: The cask will have a payload of 10 drums and a drum carriage. The interior volume of the cask, V_{cask}, is 4438 liters. The volume occupied by the drum carriage, $V_{carriage}$, is 143.2 liters. The external volume of a single drum, V_{drum}, is 235.7 liters. The void volume within the cask is calculated as:

$$V_{void} = V_{cask} - V_{carriage} - 10\ V_{drum}$$

$$V_{void} = 4{,}438\ liters - 143.2\ liters - 10\ (235.7\ liters)$$

$$V_{void} = 1{,}938\ liters$$

Pressure: The pressure is assumed to be isobaric and equal to one atmosphere. The mole fraction of hydrogen in each void volume would be smaller if pressurization is considered and would result in a greater maximum allowable hydrogen gas generation rate. Furthermore, the amount of hydrogen gas generated during a 60-day shipping period would be negligible compared to the quantity of air initially present at the time of sealing the CNS 10-160B cask.

Temperature: The input parameter affected by temperature is the release rate through the different confinement layers in the payload containers and the G values for hydrogen. Release rates increase with increasing temperature as documented in Appendix 3.6.12 of the TRUPACT-II SAR (Reference 12.2). Therefore, the minimum release rates would be those at the lowest operating temperature. These are the release rates indicated in Table 10-2 for 233K. The minimum decay heat limits are determined by the ratio of the release rates and the G values. In other words, the higher the release rates, the higher the decay heat limit; the higher the G value, the lower the decay heat limit. The dependence of G values on temperature is documented in Section 10.4. For determining the decay heat limit, the temperature that yielded the minimum decay heat limit was used as the input parameter.

In summary, the temperature dependence of the input parameters was accounted for in the calculation so that, in each case, the minimum possible limit (hydrogen generation rate or decay heat limit) was obtained. This provides an additional margin of safety in the analysis.

Table 10-2. Release Rates of Hydrogen Across Confinement Layers

Confinement Layer	Release Rate (mol/sec/mol fraction)	
	T = 233K	**T = 348.6K**
Plastic Inner Bag (twist-and-tape closure)	3.895×10^{-7}	5.58×10^{-7} [a]
Plastic Inner Bag (vented/filtered with a 1.075x10-5 mole/sec/mole fraction filter at 294 K)	7.156×10^{-6}	1.447×10^{-5}
Rigid Polyethylene Drum Liner (0.3-inch diameter hole)	4.695×10^{-5}	5.09×10^{-5}
Drum Filter	2.46×10^{-6}	4.98×10^{-6}

[a] The value at 70°F is conservatively used.

10.4 Determination of Maximum Allowable Decay Limits

The maximum allowable decay heat limits for the ETEC waste content codes were calculated using the methodology described in Appendix 4.10.2 and the content code-specific G values and waste data described below:

10.4.1 G Value Data

G values for TRU wastes are content specific. G values are determined based on the bounding materials present in the payload. The following G values were used for each of the content codes based on the presence of the bounding materials. The G values at 70°F are adjusted to the maximum operating temperature of the CNS 10-160B cask (168°F) using the Arrhenius equation. The maximum operating

temperature yields the lowest decay heat limits for the operating temperature range of the CNS 10-160B cask.

Table 10-3 summarizes the bounding G values for hydrogen and the activation energies for the G values for these different content codes at the temperature that provides the minimum decay heat limit (i.e., 348.6K, the maximum operating temperature). Materials determining these bounding G values are also listed in Table 10-3. These G values are further discussed by content code below.

Dose-dependent G values for the authorized content codes are provided in Table 10-4 at the temperature that provides the minimum decay heat limit (i.e., 348.6K, the maximum operating temperature). The methodology associated with the determination of dose-dependent G values pursuant to the Matrix Depletion Program is further discussed in Attachment A of Appendix 4.10.2.

Table 10-3. Summary of Bounding G Values (Dose ≤ 0.012 watt*year)

Content Code	Waste Material	Maximum Hydrogen Gas G Value at 70°F (molecules/ 100 eV)	Bounding Hydrogen Gas G Value (molecules/100 eV)			Activation Energy (kcal/mole)
			α-radiation	β-radiation	γ-radiation	
ET 121A ET 121B	Cellulose	3.2	5.61			2.1
ET 126A ET 126B	Polyethylene	4.1	5.08			0.8
ET 325A ET 325B	Cellulose	3.2	4.60	5.61	5.61	2.1
ET 326A	50% Polyethylene	2.05	2.08	2.54	2.54	0.8

Table 10-4. Summary of Bounding G Values (Dose > 0.012 watt*year)

Content Code	Waste Material	Maximum Hydrogen Gas G Value at 70°F (molecules/ 100 eV)	Bounding Hydrogen Gas G Value (molecules/100 eV)			Activation Energy (kcal/mole)
			α-radiation	β-radiation	γ-radiation	
ET 121A ET 121B	Cellulose	1.09	1.91			2.1
ET 126A ET 126B	Polyethylene	4.1	5.08			0.8
ET 325A ET 325B	Cellulose	1.09	1.566	1.91	5.61	2.1
ET 326A	50% Polyethylene	0.32	0.33	0.40	2.54	0.8

ET 121A, ET 121B

This content code represents solid organic debris consisting of various combustible and non-combustible items. The material present in this waste with the highest G value at the maximum operating temperature of the CNS 10-160B cask (168°F) is cellulosics and is therefore considered as the bounding material for hydrogen and total gas. The G value for hydrogen associated with cellulosics is 3.2 molecules/100eV (at 70°F) if the attained dose is less than or equal to 0.012 watt*year. The dose dependent G value for cellulosics is 1.09 molecules/100 eV if the dose attained in the drum is greater than 0.012 watt*yr. The methodology associated with the determination of dose-dependent G values pursuant to the Matrix Depletion Program is further discussed in Attachment A of Appendix 4.10.2. The G values at 70°F are adjusted to the maximum operating temperature of the CNS 10-160B cask (168°F) using the Arrhenius equation. The activation energy of the G value for cellulosics is 2.1 kcal/mole. Thus, at the maximum operating temperature of the CNS 10-160B cask (168°F), the bounding hydrogen G values for cellulosics are 5.61 molecules/100 eV (dose ≤ 0.012 watt*year) and 1.91 molecules/100 eV (dose > 0.012 watt*year).

ET 126A, ET 126B

This content code represents Petroset-II-solidified oil, with some solid debris waste. All the materials in the Petroset-II and the oil/solvent mixture added to form the final waste form have hydrogen G-values less than polyethylene that is also present in greater than 1 weight percent in the waste. The maximum hydrogen G-value for mineral oils and machining oils in Appendix 3.6.8, Table 3.13-1 of the TRUPACT-II SAR (Ref **12.__**) is 2.8 molecules/100 eV. Thus, the G value for hydrogen associated with polyethylene of 4.1 molecules/100eV (at 70°F) is considered bounding for this content code. For this content code, the bounding G value is considered to be independent of the dose per Attachment A of Appendix 4.10.2.

ET 325A, ET 325B

This content code represents solid organic debris consisting of various combustible and non-combustible items. The material present in this waste with the highest G value at the maximum operating temperature of the CNS 10-160B cask (168°F) is cellulosics and is therefore considered as the bounding material for hydrogen and total gas. The G value for hydrogen associated with cellulosics is 3.2 molecules/100eV (at 70°F) if the attained dose is less than or equal to 0.012 watt*year. The dose dependent G value for cellulosics is 1.09 molecules/100 eV if the dose attained in the drum is greater than 0.012 watt*yr. The methodology associated with the determination of dose-dependent G values pursuant to the Matrix Depletion Program is further discussed in Attachment A of Appendix 4.10.2. The G values at 70°F are adjusted to the maximum operating temperature of the CNS 10-160B cask (168°F) using the Arrhenius equation. The activation energy of the G value for cellulosics is 2.1 kcal/mole. Thus, at the maximum operating temperature of the CNS 10-160B cask (168°F), the bounding hydrogen G values for cellulosics are 5.61 molecules/100 eV (dose ≤ 0.012 watt*year) and 1.91 molecules/100 eV (dose > 0.012 watt*year).

ET 326A

The bounding G values for hydrogen and total gas for this content code are provided by polyethylene, which is used only as packaging material. These G values are derived from the information presented in Appendix 3.6.7 of the TRUPACT-II SAR (Reference 12.2). The allowable materials in this content code in concentrations of greater than 1 weight percent are provided in Attachment A. All of these materials conform with the bounding G values for this content code.

10.4.2 Waste Data

RadCalc requires as input the following parameters associated with the waste for which the maximum allowable decay heat limit is being calculated:

- Physical Form – liquid, solid, or gas
- Waste Volume – volume of the waste, cm^3
- Waste Mass – mass of the waste, g
- G Value – G value of the waste, molecules per 100 eV

Liquids and gas wastes are prohibited in the CNS 10-160B cask. The volume of the waste is assumed to be 217 liters per drum (the external volume of the waste drum) and 2170 liters for 10 drums in the cask. The waste volume is used by RadCalc, along with the waste mass, to determine the volume of hydrogen generated in the cask. The mass of the waste is calculated based on the assumed bulk density of the waste. The volume of hydrogen generated is directly proportional to the mass of the waste, as discussed in Reference 12.3. The most conservative estimate of the volume of hydrogen (greatest volume) would occur at the highest possible bulk density of the waste.

For content codes ET 325A or ET 325B, the single drum of this content code has a gross weight of 268 pounds (122 kg) and the volume occupied by the drum and waste is assumed to be 55 gallons ($208x10^3$ cm^3). Thus, the bulk density of this content code is ($122x10^3$ g/ 208x103 cm^3) or 0.59 g/cm^3. A conservative bounding waste bulk density of 1.5 g/cm^3 (based on cement obtained from Reference 12.4), is used for content code ET 326A. Representative waste drum data for this content code provide waste bulk densities well below the 1.5 g/cm^3 bounding bulk density used to calculate the decay heat limits. The mass of waste in the 10-160B is calculated based on the total volume of the 10 waste drums (2170 liters).

10.4.3 Determining Decay Heats

Decay heat shall be determined by calculations using the isotopic inventory information for fissile and nonfissile TRU radionuclides and for any non-TRU radionuclides that may be present in the TRU waste drums as determined through the methods documented in Section 9.2. The decay heats of the drums shall be calculated by combining the isotopic inventory data and the calculated decay heat for each radionuclide. The calculated value of the decay heat for an individual drum and the decay heat error (if applicable) shall be recorded in the data package for an individual payload container. If the drum meets the drum limit for the content code, it is eligible for shipment if all other transportation requirements are met. If the drum does not meet the limit, it cannot be shipped and shall be segregated for repackaging or other mitigation measures. The total decay heat for the CNS 10-160B Cask payload shall be determined by summing the decay heats of all drums making up the payload for the CNS 10-160B Cask. The total decay heat error (if applicable) is calculated as the square root of the sum of the squares of the individual decay heat error values. The total shipment decay heat value (calculated value plus total error) shall be compared to the cask limit for decay heat. The site transportation certification official (TCO) shall evaluate the compliance of individual drums and the total of all drums with the maximum limits per drum and per cask.

10.5 Methodology for Compliance with Payload Assembly Requirements

The TCO shall ensure that the CNS 10-160B Cask payload consists of payload containers belonging to the same content code. In the event that payload containers of different content codes with different bounding G values and resistances are assembled together in the CNS 10-160B cask, the TCO shall ensure that the decay heat or hydrogen gas generation rate for each payload container within the payload is less than or equal to the container with the most restrictive limits.

11.0 WEIGHT

11.1 Requirements

The weight limit for the contents of the loaded cask is 14,500 pounds.

11.2 Methods of Compliance and Verification

Each 55-gallon drum will be weighed on a calibrated scale after it is filled and closed. When the payload data sheets are completed for the shipment, they will reflect the total weight of each drum. Based on the total measured weight of the individual payload containers, ETEC shall calculate total assembly weight and evaluate compliance with the contents of the loaded cask.

12.0 REFERENCES

12.1 U.S. Department of Energy (DOE), 2002, "Contact Handled-Transuranic Waste Acceptance Criteria for the Waste Isolation Pilot Plant," Rev. 0, *DOE/WIPP-02-3122*, U.S. Department of Energy, Carlsbad Field Office, Carlsbad, New Mexico.

12.2 U.S. Department of Energy, "Safety Analysis Report for the TRUPACT-II Shipping Package," Current Revision, U.S. Department of Energy Carlsbad Field Office, Carlsbad, New Mexico.

12.3 Flaherty, J.E., A. Fujita, C.P. Deltete, and G.J. Quinn, 1986, "A Calculational Technique to Predict Combustible Gas Generation in Sealed Radioactive Waste Containers," *GEND 041*, EG&G Idaho, Inc., Idaho Falls, Idaho.

12.4 Perry, R.H., D.W. Green, and J.O. Maloney, 1984, *Perry's Chemical Engineers' Handbook*, 6th ed., McGraw-Hill Book Co., New York, New York.

Attachment A

Transuranic Content Codes and Chemical Lists
For Energy Technology Engineering Center (ETEC)

CONTENT CODE: ET 121A, ET 121B

CONTENT DESCRIPTION: Solid Organic Waste

GENERATING SITE: Energy Technology Engineering Center (ETEC)

STORAGE SITE: ETEC

WASTE DESCRIPTION: This waste consists of a variety of combustible and noncombustible organic items.

GENERATING SOURCE(S): Solid organic and inorganic debris waste was generated during decontamination and decommissioning (D&D) operations at the former ETEC-associated Hot Laboratory.

WASTE FORM: The waste may include combustible items such as cloth and paper products (e.g., from the cleanup of spills), rags, coveralls and booties, plastic, cardboard, rubber, wood, surgeons gloves, and Kimwipes. The waste may also include filter waste, (e.g., dry box filters, HEPA filters, and filter cartridges); noncombustible Benelex and plexiglas neutron shielding, blacktop, concrete, dirt, and sand; leaded gloves and aprons comprised of Hypalon rubber and lead oxide impregnated neoprene; and small amounts of metal waste. This waste may also include particulate and sludge-type organic process solids immobilized/solidified with Portland cement, vermiculite, Aquaset, or Petroset.

WASTE PACKAGING:
ET 121A: The waste is packaged in up to two plastic inner bags that are closed by the twist and tape method. The bags may be placed inside a rigid polyethylene liner punctured with a minimum 0.3-inch diameter hole. The liner would then be placed directly inside a 55-gallon drum installed with a filter vent. Up to ten drums will then be placed into the CNS 10-160B cask.

ET 121B: The waste is packaged in up to two vented/filtered plastic inner bags. The bags may be placed inside a rigid polyethylene liner punctured with a minimum 0.3-inch diameter hole. The liner would then be placed directly inside a 55-gallon drum installed with a filter vent. Up to ten drums will then be placed into the CNS 10-160B cask.

METHODS FOR DETERMINATION OF ISOTOPIC CHARACTERIZATION: The required isotopic information to demonstrate compliance with the limits on fissile content, decay heat, and curie content will be determined based on acceptable knowledge, the radioassay of samples, or on total drum activity measurements, taken on the product material.

FREE LIQUIDS: Liquid waste is prohibited in the drums except for residual amounts in well-drained containers. The total volume of residual liquid in a payload container shall be less than 1 volume percent of the payload container. Waste packaging procedures ensure that free liquids are less than 1 volume percent of the payload container.

EXPLOSIVES/COMPRESSED GASES: Explosives and compressed gases in the payload containers are prohibited by waste packaging procedures.

PYROPHORICS: Nonradioactive pyrophorics in the payload containers are prohibited by waste packaging procedures. Waste packaging procedures shall ensure that all pyrophoric radioactive materials are present only in small residual amounts (less than 1 weight percent) in payload containers.

CORROSIVES: Corrosives are prohibited in the payload containers. Acids and bases that are potentially corrosive shall be neutralized and rendered noncorrosive prior to being a part of the waste. The physical form of the waste and the waste generating procedures ensure that the waste is in a nonreactive form.

CHEMICAL COMPATIBILITY: A chemical compatibility study has been performed on this content code, and all waste is chemically compatible for materials in greater than trace (>1% weight) quantities.

ADDITIONAL CRITERIA: Each drum is fitted with a minimum of one filter vent. Drum filters have a minimum hydrogen diffusivity of 3.7E-06 mole/second/mole fraction. If present, rigid liners in 55-gallon drums shall be punctured with a minimum 0.3-inch diameter hole for gas release.

MAXIMUM ALLOWABLE HYDROGEN GENERATION RATES - OPTION 1: The maximum allowable hydrogen generation rate limit for ET 121A is 8.054E-09 moles per second per drum and 8.054E-08 moles per second per CNS 10-160B cask. The maximum allowable hydrogen generation rate limit for ET 121B is 3.697E-08 moles per second per drum and 3.697E-07 moles per second per CNS 10-160B cask.

MAXIMUM ALLOWABLE DECAY HEAT LIMIT - OPTION 2: The maximum allowable decay heat limit for ET 121A is 0.019 watts per drum and 0.19 watts per CNS 10-160B cask if dose ≤ 0.012 watt*yr and 0.057 watts per drum and 0.57 watts per CNS 10-160B cask if dose > 0.012 watt*yr. The maximum allowable decay heat limit for ET 121B is 0.086 watts per drum and 0.86 watts per CNS 10-160B cask if dose ≤ 0.012 watt*yr and 0.252 watts per drum and 2.26 watts per CNS 10-160B cask if dose > 0.012 watt*yr.

ENERGY TECHNOLOGY ENGINEERING CENTER (ETEC)
CONTENT CODES ET 121A AND ET 121B
SOLID ORGANIC WASTE

MATERIALS AND CHEMICALS >1%

PLASTIC
PAPER
WOOD
CELLULOSICS
CLOTH
POLY-LINER
METAL
STAINLESS STEEL
STRIPPABLE PAINT
RUBBER
PAINT
PLEXIGLAS
VERMICULITE

MATERIALS AND CHEMICALS <1%

CLEANERS
OILS
SOLVENTS
SEALANT MATERIAL

CONTENT CODE: ET 126A, ET 126B

CONTENT DESCRIPTION: Solidified Organic Process Waste

GENERATING SITE: Energy Technology Engineering Center (ETEC)

STORAGE SITE: ETEC

WASTE DESCRIPTION: This waste consists of a variety of PETROSET-II solidified oil, with some debris waste on top.

GENERATING SOURCE(S): Waste was accumulated during the final cleanup of the NMDF and consisted primarily of oil and oil sludge that was removed from building and glove-box equipment.

WASTE FORM: In 1988, the oil was consolidated and solidified using Petroset-II in four new drums (B55-1 through B55-4). The repackaging and solidification process took place in the Hot Laboratory cells during the period of October to December, 1988.

WASTE PACKAGING:
ET 126A: The waste is packaged in up to two plastic inner bags that are closed by the twist and tape method. The bags may be placed inside a rigid polyethylene liner punctured with a minimum 0.3-inch diameter hole. The liner would then be placed directly inside a 55-gallon drum installed with a filter vent. Up to ten drums will then be placed into the CNS 10-160B cask.

ET 126B: The waste is packaged in up to two vented/filtered plastic inner bags. The bags may be placed inside a rigid polyethylene liner punctured with a minimum 0.3-inch diameter hole. The liner would then be placed directly inside a 55-gallon drum installed with a filter vent. Up to ten drums will then be placed into the CNS 10-160B cask.

METHODS FOR DETERMINATION OF ISOTOPIC CHARACTERIZATION: The required isotopic information to demonstrate compliance with the limits on fissile content, decay heat, and curie content will be determined based on acceptable knowledge, the radioassay of samples, or on total drum activity measurements, taken on the product material.

FREE LIQUIDS: Liquid waste is prohibited in the drums except for residual amounts in well-drained containers. The total volume of residual liquid in a payload container shall be less than 1 volume percent of the payload container. Waste packaging procedures ensure that free liquids are less than 1 volume percent of the payload container.

EXPLOSIVES/COMPRESSED GASES: Explosives and compressed gases in the payload containers are prohibited by waste packaging procedures.

PYROPHORICS: Nonradioactive pyrophorics in the payload containers are prohibited by waste packaging procedures. Waste packaging procedures shall ensure that all pyrophoric radioactive materials are present only in small residual amounts (less than 1 weight percent) in payload containers.

CORROSIVES: Corrosives are prohibited in the payload containers. The physical form of the waste and the waste generating procedures ensure that the waste is in a nonreactive form.

CHEMICAL COMPATIBILITY: A chemical compatibility study has been performed on this content code, and all waste is chemically compatible for materials in greater than trace (>1% weight) quantities.

ADDITIONAL CRITERIA: Each drum is fitted with a minimum of one filter vent. Drum filters have a minimum hydrogen diffusivity of 3.7E-06 mole/second/mole fraction. If present, rigid liners in 55-gallon drums shall be punctured with a minimum 0.3-inch diameter hole for gas release.

MAXIMUM ALLOWABLE HYDROGEN GENERATION RATES - OPTION 1: The maximum allowable hydrogen generation rate limit for ET 126A is 8.054E-09 moles per second per drum and 8.054E-08 moles per second per CNS 10-160B cask. The maximum allowable hydrogen generation rate limit for ET 126B is 3.697E-08 moles per second per drum and 3.697E-07 moles per second per CNS 10-160B cask.

MAXIMUM ALLOWABLE DECAY HEAT LIMIT - OPTION 2: The maximum allowable decay heat limit for ET 126A is 0.021 watts per drum and 0.21 watts per CNS 10-160B cask for all dose values. The maximum allowable decay heat limit for ET 126B is 0.095 watts per drum and 0.95 watts per CNS 10-160B cask for all dose values.

ENERGY TECHNOLOGY ENGINEERING CENTER (ETEC)
CONTENT CODES ET 126A AND ET 126B
SOLIDIFIED ORGANIC PROCESS WASTE

MATERIALS AND CHEMICALS >1%

PETROSET-II
AQUASET
PLASTIC
POLY-LINER
RUBBER GLOVES
VERMICULITE
METALS
SYNTHETIC RUBBER
DRY/ALARA PAINT
PAPER
VACUUM PUMP OILS (INCLUDING DC-704 OIL)
HYDRAULIC OILS (INCLUDING ENERPAC)

MATERIALS AND CHEMICALS <1%

CELLULOSICS
METALS
SYNTHETIC RUBBER
DRY/ALARA PAINT
ISOPROPANOL
FREON

CONTENT CODE: ET 325A, ET 325B

CONTENT DESCRIPTION: Solid Organic and Inorganic Waste

GENERATING SITE: Energy Technology Engineering Center (ETEC)

STORAGE SITE: ETEC

WASTE DESCRIPTION: This waste consists of Hot Laboratory debris including paper, plastic, metal and glass.

GENERATING SOURCE(S): Solid organic and inorganic debris waste was generated during decontamination and decommissioning (D&D) operations at the former ETEC-associated Hot Laboratory.

WASTE FORM: The debris waste consists of miscellaneous waste materials removed from the facility during D&D, including a small capped pipe that contains unirradiated plutonium oxide/uranium oxide pieces from ETEC's former Nuclear Materials Development Facility, canisters of paint chips surrounded by lead shielding, and a lead brick.

WASTE PACKAGING:
ET 325A: The waste is packaged in up to two plastic inner bags. The first bag (if present) may be closed by the twist and tape method and the second bag is vented/filtered. The bags may be placed inside a rigid polyethylene liner punctured with a minimum 0.3-inch diameter hole. The liner would then be placed directly inside a 55-gallon drum installed with a filter vent. Up to ten drums will then be placed into the CNS 10-160B cask.

ET 325B: The waste is packaged in up to two vented/filtered plastic bags. The bags may be placed inside a rigid polyethylene liner punctured with a minimum 0.3-inch diameter hole. The liner would then be placed directly inside a 55-gallon drum installed with a filter vent. Up to ten drums will then be placed into the CNS 10-160B cask.

METHODS FOR DETERMINATION OF ISOTOPIC CHARACTERIZATION: The required isotopic information to demonstrate compliance with the limits on fissile content, decay heat, and curie content will be determined based on acceptable knowledge, the radioassay of samples, or on total drum activity measurements, taken on the product material.

FREE LIQUIDS: Liquid waste, except for residual amounts in well-drained containers, is prohibited in the drums. The total volume of residual liquid in a payload container shall be less than 1 volume percent of the payload container. Waste packaging procedures ensure that free liquids are less than 1 volume percent of the payload container.

EXPLOSIVES/COMPRESSED GASES: Explosives and compressed gases in the payload containers are prohibited by waste packaging procedures. If present, pressurized cans shall be punctured and emptied prior to packaging.

PYROPHORICS: Nonradioactive pyrophorics in the payload containers are prohibited by waste packaging procedures. Process knowledge indicates that no non-radioactive pyrophoric material was generated in association with the waste. Waste packaging procedures shall ensure that all radioactive pyrophoric materials are present only in small residual amounts (less than 1 weight percent) in payload containers.

CORROSIVES: Corrosives are prohibited in the payload container. Acids and bases that are potentially corrosive shall be neutralized or rendered noncorrosive prior to being a part of the waste. The physical form of the waste and the waste generating procedures ensure that the waste is in a nonreactive form.

CHEMICAL COMPATIBILITY: A chemical compatibility study has been performed on this content code, and all waste is chemically compatible for materials in greater than trace (>1% by weight) quantities.

ADDITIONAL CRITERIA: Each drum is fitted with a minimum of one filter vent. Drum filters have a minimum hydrogen diffusivity of 3.7E-06 mole/second/mole fraction. If present, rigid liners in 55-gallon drums shall be punctured with a minimum 0.3-inch diameter hole for gas release.

MAXIMUM ALLOWABLE HYDROGEN GENERATION RATES - OPTION 1: The maximum allowable hydrogen generation rate limit for ET 325A is 1.323E-08 moles per second per drum and 1.323E-07 moles per second per CNS 10-160B cask. The maximum allowable hydrogen generation rate limit for ET 325B is 3.697E-08 moles per second per drum and 3.697E-07 moles per second per CNS 10-160B cask.

MAXIMUM ALLOWABLE DECAY HEAT LIMIT - OPTION 2: The maximum allowable decay heat limit for ET 325A is 0.038 watts per drum and 0.38 watts per CNS 10-160B cask if dose ≤ 0.012 watt*yr and 0.107 watts per drum and 1.07 watts per CNS 10-160B cask if dose > 0.012 watt*yr. The maximum allowable decay heat limit for ET 325B is 0.104 watts per drum and 1.04 watts per CNS 10-160B cask if dose ≤ 0.012 watt*yr and 0.290 watts per drum and 2.26 watts per CNS 10-160B cask if dose > 0.012 watt*yr.

ENERGY TECHNOLOGY ENGINEERING CENTER (ETEC)
CONTENT CODES ET 325A AND ET 325B
SOLID ORGANIC AND INORGANIC WASTE

MATERIALS AND CHEMICALS >1%

CLOTH
CONCRETE PARTICULATE
FILTERS
GLASS
METALS(e.g., aluminum, titanium, iron, copper, lead, tungsten, brass, steel and stainless steel, tantalum)
PuO/UO PIECES (unirradiated)
PAINT CHIPS (strippable paint)
PLASTIC
PAPER
VERMICULITE
WOOD

MATERIALS AND CHEMICALS <1%

CLEANERS
OILS
SOLVENTS
SEALANT MATERIAL

CONTENT CODE: ET 326A

CONTENT DESCRIPTION: Solidified Organic Process Waste

GENERATING SITE: Energy Technology Engineering Center (ETEC)

STORAGE SITE: ETEC

WASTE DESCRIPTION: This waste consists of drain line residue, including organic sludges and sludge-like materials, steel and concrete components.

GENERATING SOURCE(S): This waste is primarily dry fines and solidified sludge that were removed from the former ETEC-associated Hot Laboratory drain line system and drain tank during decontamination and decommissioning operations. The waste includes fines that are the result of cutting and grinding operations.

WASTE FORM: The waste consists of materials that were washed out of operational hot cells. The primary constituents are steel and fuel element fines (including TRU, fission products, and activated cladding residue) from declad grinding and cutting operations, sludge wastes, steel and concrete debris, sand, dirt, grinding materials, and concrete dust/particulate. The sludge wastes are, in part, the result of solidification or liquid absorption procedures using diatomaceous earth, fly ash, cement, or concrete.

WASTE PACKAGING: The waste is packaged directly into 55-gallon drums or will be packaged in closed 1-gallon paint cans that may be placed in larger metal cans that allow free transport of gas. The larger metal cans may be placed inside a rigid polyethylene liner punctured with a minimum 0.3-inch diameter hole. The liner would then be placed directly inside a 55-gallon drum installed with a filter vent. Ten drums will then be placed into the CNS 10-160B cask. The drums may be lined with thick annular concrete shields. Bottom and top concrete shields plus thick steel lids may also be used inside the drums. Inner containers greater than 4 liters in volume are punctured or vented to allow free gas release. Up to ten drums will then be placed into the CNS 10-160B cask.

METHODS FOR DETERMINATION OF ISOTOPIC CHARACTERIZATION: The required isotopic information to demonstrate compliance with the limits on fissile content, decay heat, and curie content will be determined based on acceptable knowledge, the radioassay of samples, and on total drum activity measurements taken on the product material during the processing at the site.

FREE LIQUIDS: Liquid waste, except for residual amounts in well-drained containers, is prohibited in the drums. The total volume of residual liquid in a payload container shall be less than 1 volume percent of the payload container. Site procedures for liquid absorption and solidification ensure that free liquids are less than 1 volume percent of the payload container.

EXPLOSIVES/COMPRESSED GASES: Explosives and compressed gases in the payload containers are prohibited by waste packaging procedures. If present, pressurized cans shall be punctured and emptied prior to packaging.

PYROPHORICS: Nonradioactive pyrophorics in the payload containers are prohibited by waste packaging procedures. Process knowledge indicates that no non-radioactive pyrophoric material was generated in association with waste. Waste packaging procedures shall ensure that all radioactive pyrophoric materials are present only in small residual amounts (less than 1 weight percent) in payload containers.

CORROSIVES: Corrosives are prohibited in the payload container. Acids and bases that are potentially corrosive shall be neutralized or rendered noncorrosive prior to being a part of the waste. The physical form of the waste and the waste generating procedures ensure that the waste is in a nonreactive form.

CHEMICAL COMPATIBILITY: A chemical compatibility study has been performed on this content code, and all waste is chemically compatible for materials in greater than trace (>1% by weight) quantities.

ADDITIONAL CRITERIA: Each drum is fitted with a minimum of one filter vent. Drum filters have a minimum hydrogen diffusivity of 3.7E-06 mole/second/mole fraction. Inner containers greater than 4 liters in volume are punctured or vented to allow free gas release. If present, rigid liners in 55-gallon drums shall be punctured with a minimum 0.3-inch diameter hole for gas release.

MAXIMUM ALLOWABLE HYDROGEN GENERATION RATES - OPTION 1: The maximum allowable hydrogen generation rate limit is 4.659E-08 moles per second per drum and 4.659E-07 moles per second per CNS 10-160B cask.

MAXIMUM ALLOWABLE DECAY HEAT LIMIT - OPTION 2: The maximum allowable decay heat limit is 0.239 watts per drum and 2.39 watts per CNS 10-160B cask if dose ≤ 0.012 watt*yr and 0.591 watts per drum and 5.91 watts per CNS 10-160B cask if dose > 0.012 watt*yr.

ENERGY TECHNOLOGY ENGINEERING CENTER (ETEC) CONTENT CODE ET 326A
SOLIDIFIED ORGANIC PROCESS WASTE

MATERIALS AND CHEMICALS >1%

ABSORBENTS (diatomaceous earth, vermiculite, fly ash, cement, concrete)
CONCRETE AND CONCRETE DUST/PARTICULATE
DIRT
GLASS
GRINDING MATERIALS (carborundum, other carbides)
IRON OXIDES
METALS (including carbon steel [containers, weir boxes, grindings and shavings], aluminum, chromium, titanium, zinc, beryllium, iron, nickel, copper, mercury, tungsten, zirconium, cadmium, brass, stainless steel [primarily grindings and shavings], molybdenum, lead)
PAINT CHIPS
PLASTIC
SAND (silica and alumina based)

MATERIALS AND CHEMICALS <1%

ACETONE
ALCOHOL
ALCONOX
BIG ORANGE CLEANER
CALCIUM CARBONATE
CAUSTIC CLEANERS: Oakite, MX-12, Big K (potassium hydroxide)
DOWANOL
ELECTROPOLISH (phosphoric and sulfuric acid)
FOGPROOF
FREON
GRAPHITE
HYDROFLUORIC, NITRIC, HYDROCHLORIC, CITRIC, PERCHLORIC/OXALIC ACID
KEROSENE
OIL, MINERAL OIL, HYDRAULIC OIL, CUTTING OIL, SPRAY LUBRICANTS
PETROSET, AQUASET, EARTH-TITE
RADIAC WASH
SODIUM OXIDE
TRICHLOROETHYLENE
TURCO PRODUCTS (alkaline cleaners), DEFOAMING AGENTS
WINDEX
ZEP SPRAY
METAL-X

Appendix 4.10.2.4

Compliance Methodology for TRU Waste From
Lawrence Livermore National Laboratory (LLNL)
Livermore, CA

1.0 INTRODUCTION

This appendix presents how acceptable knowledge including records and database information (process knowledge) is used to qualify six drums of contact-handled transuranic (CH-TRU) waste, as payload for transport in the CNS 10-160B cask. The methods for determining each restricted parameter, the factors influencing the parameter values, and the methods used by LLNL for demonstrating compliance, are provided in the following sections.

This appendix also includes the following as attachments:

- Content code LL 116A (Attachment A)
- Chemical List for the above mentioned content code (Attachment A).

2.0 PURPOSE

The purpose of this appendix is to describe the methods and acceptable knowledge that shall be used to prepare and characterize the CH-TRU waste belonging to LLNL in order to demonstrate compliance with the TRU waste payload requirements prior to transport in the CNS 10-160B cask. This appendix is based on the format and requirements for TRU waste identified in Appendix 4.10.2 of the CNS 10-160B cask Safety Analysis Report (SAR). It incorporates acceptable methods applicable to the content codes LL 116A and LL 116B of this appendix.

Section 3.0 describes the TRU waste payload. Sections 4.0 through 11.0 discuss each payload parameter and the acceptable knowledge, process knowledge, and methods employed to demonstrate compliance with the CNS 10-160B cask payload requirements.

3.0 TRU WASTE PAYLOAD FOR CNS 10-160B CASK

The six drums of CH-TRU waste from LLNL are currently classified into a single content code, LL 116, that describes CH-TRU waste material in terms of processes generating the waste, the packaging methods used in the waste container(s), and the generating site. Content code LL 116A represents the current packaging configuration of the six drums. The waste described in LL 116A may be repackaged to the packaging configuration described in content code LL 116B. The LL 116A and LL 116B content codes for the CH-TRU waste from LLNL are provided in Attachment A.

Several payload assembly/container filter options and associated requirements are presented for the LL 116A and LL 116B content codes. LL 116A represents the current packaging configuration of the six drums of LLNL waste to be shipped in the CNS 10-160B cask. This configuration has three layers of plastic bagging (2 inner bags, 1 inner bag). The waste may require repackaging to meet the hydrogen gas generation rate or decay heat limits calculated for LL 116A. A second packaging configuration LL 116B (no plastic bag layers) is presented to represent repackaging the LLNL waste. LL 116B packaging configuration requires all inner and liner bags be breached. Methods of complying with the CNS 10-160B requirements are presented for both packaging configurations. For LL 116B, repackaged waste, the outer waste containers (55-gallon drums) may be fitted with either a standard drum filter or a high diffusivity drum filter. Additionally, the payload may be shipped as a single shipment of 6 55-gallon waste drums with 4 open dunnage drums or may be shipped as multiple shipments of up to 3 55-gallon waste drums with 7 open dunnage drums in order to meet the hydrogen gas generation limits. The hydrogen gas generation rates and decay heat limits associated with these configurations are discussed in Section 10.0.

Complete documentation packages, along with quality assurance/quality control records, shall be generated for all payload containers. TRU waste generated from the LLNL will comply with all transportation requirements using the following methods:

- Formally documented acceptable knowledge (AK)/process knowledge of the processes generating the waste
- Data packages generated for all payload containers that document the contents and properties of the waste in the container including the absence of prohibited item and compliance with packaging requirements
- Measurement of required parameters to ensure compliance with limits.

4.0 PHYSICAL FORM

4.1 Requirements

The physical form of waste comprising the CNS 10-160B cask payload is restricted to solid or solidified materials in secondary containers. The total volume of residual liquid in a secondary container is restricted to less than 1% by volume. Secondary containers must be shored to prevent movement during accident conditions. Sharp or heavy objects in the waste shall be blocked, braced, or suitably packaged as necessary to provide puncture protection for the payload containers packaging these objects. Sealed containers greater than four liters in size are prohibited.

4.2 Methods of Compliance and Verification

Compliance with the physical form requirements is determined by records and database information. The waste consists mostly of dry solid laboratory waste such as tissues, paper, assorted plastics, glassware, ceramics and metals. Portland cement or Aquaset was used to solidify water-based liquids; Envirostone or Petroset was used to solidify small amounts of solvents and oil-based liquids. LLNL has certified that the waste contains less than 1% by volume of free liquids.

LLNL personnel shall ensure compliance with the requirement associated with sharp or heavy objects through visual examination at the time of packaging and process knowledge (records and database information). Items with the potential to puncture the liner and drum are blocked, braced, or suitably packaged to ensure container integrity.

LLNL personnel shall ensure compliance with the requirement associated with sealed containers through visual examination at the time of packaging and process knowledge (records and database information).

Compliance with each of the restrictions on physical form shall be recorded in the payload container data package.

5.0 CHEMICAL FORM AND CHEMICAL PROPERTIES

5.1 Requirements

The chemical properties of the waste are determined by the chemical constituents allowed in a given content code. Specific requirements regarding the chemical form of the waste are as follows:

- Explosives, nonradioactive pyrophorics, compressed gases, and corrosives are prohibited.
- Pyrophoric radionuclides may be present only in residual amounts less than 1 weight percent.
- The total amount of potentially flammable volatile organic compounds (VOCs) present in the headspace of a secondary container is restricted to 500 parts per million (ppm).

5.2 Methods of Compliance and Verification

Compliance with chemical form and chemical property restrictions is demonstrated through process knowledge or sampling programs, if required.

5.2.1 Pyrophoric Materials

LLNL has certified that the waste does not contain any pyrophorics.

5.2.2 Explosives, Corrosives, and Compressed Gases

LLNL has certified that the waste does not contain any explosives or compressed gases. LLNL procedures call for all aerosol cans to be punctured before placement in a TRU waste drum. LLNL has certified that the waste does not contain any corrosive materials. Any corrosive materials used during the production of the waste was neutralized prior to being emplaced in the waste containers.

5.2.3 Flammable VOCs

All TRU waste from the LLNL is from research and development and will be packaged with the generation of complete data packages. The LLNL will ensure that the total amount of potentially flammable VOCs present in the headspace of a secondary container is restricted to 500 ppm.

6.0 CHEMICAL COMPATIBILITY

6.1 Requirements

Each content code has an associated chemical list (Attachment A) based on AK information. Chemical constituents in a payload container assigned to a given content code shall conform to these approved chemical lists. Chemicals/materials that are not listed are allowed in trace amounts (quantities less than 1 weight percent) in a payload container provided that the total quantity of trace chemicals/materials is restricted to less than 5 weight percent.

Chemical compatibility of a waste with its packaging ensures that chemical reactions will not occur that might pose a threat to the safe transport of a payload in the CNS 10-160B cask.

6.2 Methods of Compliance and Verification

Attachment B of Appendix 4.10.2 presents the methodology and results for the chemical compatibility analyses performed for the list of allowable chemicals/materials associated with the TRU waste content codes expected to be shipped in the CNS 10-160B cask. The results of these chemical compatibility analyses show that these content codes can be transported without any incompatibilities.

The chemicals present in the LLNL content codes conform to the list of allowable materials in Attachment B of Appendix 4.10.2. Therefore the waste meets the chemical compatibility requirements.

7.0 GAS DISTRIBUTION AND PRESSURE BUILDUP

7.1 Requirements

Gas distribution and pressure buildup during transport of TRU waste in the CNS 10-160B cask payload are restricted to the following limits:

- The gases generated in the payload must be controlled to prevent the occurrence of potentially flammable concentrations of gases within the payload confinement layers and the void volume of the inner vessel (IV) cavity. Specifically, hydrogen concentrations within the payload confinement layers are limited to 5 percent by volume during a maximum 60-day shipping period (see Attachment C of Appendix 4.10.2).

- The gases generated in the payload and released into the IV cavity must be controlled to maintain the pressure within the IV cavity below the acceptable packaging design limit of 31.2 pounds per square inch gauge (psig).

7.2 Methods of Compliance and Verification

Compliance with the CNS 10-160B cask design pressure limit for the LLNL content codes and each payload assembly configuration is analyzed by assuming that all gases generated are released into the IV cavity and by including the contributions from thermal expansion of gases and vapor pressure of atmospheric water.

Table 7-1 shows that the pressure increase during a period of 365 days is below the design pressure limit of 31.2 psig for all waste shipment options of LLNL TRU waste.

Table 7-1. Maximum Pressure Increase Over 365-Day Shipping Period

Content Code and Configuration	G_{eff} (RT)[a]	Void Volume (Liters)	Activation Energy (kcal/mole)	Decay Heat Limit (Watts/cask)	G_{eff}[b]	P_{max}[c] (psig)
LL 116A	8.1	1938	2.1	0.354	14.19	11.89
LL 116B standard drum filter (3.7E-6 mole/sec/mole fraction) (6 waste drums per cask)	8.1	1938	2.1	2.26	14.19	31.13
LL 116B high diffusivity drum filter (1.85E-5 mole/sec/mole fraction) (6 waste drums per cask)	8.1	1938	2.1	2.26	14.19	31.13
LL 116B standard drum filter (3.7E-6 mole/sec/mole fraction) (3 waste drums per cask)	8.1	1938	2.1	2.26	14.19	31.13
LL 116B high diffusivity drum filter (1.85E-5 mole/sec/mole fraction) (3 waste drums per cask)	8.1	1938	2.1	2.26	14.19	31.13

[a]G value for net gas (molecules per 100 eV) at room temperature (70°F) (dose > 0.012 watt*year).
[b]Effective G value (molecules per 100 eV) at maximum operating temperature of 168°F calculated using the Arrhenius equation for which activation energy is an input.
[c]Maximum pressure.

Compliance with the restrictions on flammable gas concentration is discussed in Section 10.0.

8.0 PAYLOAD CONTAINER AND CONTENTS CONFIGURATION

8.1 Requirements

Fifty-five-gallon drums are authorized payload containers in a CNS 10-160B cask. Up to ten 55-gallon drums of TRU waste may be packaged in the cask. Each 55-gallon drum to be packaged in the CNS cask must have a minimum of one filter vent. The minimum filter vent specifications for the 55-gallon drums of LLNL waste are provided in Table 8-1.

Filter vents shall be legibly marked to ensure both (1) identification of the supplier and (2) date of manufacture, lot number, or unique serial number.

The rigid polyethylene liner, if present, in a payload container shall be punctured with a 0.3-inch diameter hole for content code LL 116A or with a 1-inch diameter hole for content code LL 116B before the container is transported in the CNS 10-160B.

Table 8-1. Minimum Filter Vent Specifications

Container Filter Type	Filter Specification			
	Number of Vents Required per Container	**Flow Rate (ml/min of air, STP, at 1 inch of water)[a]**	**Efficiency (percent)**	**Hydrogen Diffusivity (mol/s/mol fraction at 25°C)**
Standard drum filter	1	35	99.5	3.70E-6
High diffusivity drum filter	1	35	99.5	1.85E-5

[a] Filters tested at a different pressure gradient shall have a proportional flow rate (e.g., 35 ml/min at 1 inch of water = 1 L/min at 1 psi).

8.2 Methods of Compliance and Verification

Compliance with the payload container and contents configuration requirements is determined by visual examination, process knowledge, and through procurement records.

Procured filter vents at LLNL shall be inspected to verify compliance with the applicable filter vent specifications specified in the purchase requisition (i.e., visual inspection of certificate of conformance, serial numbers to actual filter vents, and inspection of filters for physical damage). Nonconforming filter vents shall be segregated.

Prior to transport, payload container filter vents shall be visually inspected for damage or defect. If a defect is identified, a nonconformance report shall be issued, and the payload container shall be returned for repackaging or overpacking prior to certification.

The requirements for the rigid liner shall be met by procurement controls and site QA procedures. Venting of the lid of a liner (along with the minimum diameter of the hole in the liner) may be controlled administratively (i.e., buying only punctured liners) or by visual examination of the liner prior to closure. Alternatively, radiography or sampling programs and existing records may be used to verify that the liner meets the requirements.

9.0 ISOTOPIC CHARACTERIZATION AND FISSILE CONTENT

9.1 Requirements

The CNS 10-160B cask payload allows 325 FGE of fissile materials. Plutonium content in excess of 0.74 TBq (20 curies) per cask must be in solid form.

9.2 Methods of Compliance and Verification

LLNL assays drums in Building 332 using an SGS, or a combination of calorimetry and gamma counting. In Building 251, individual waste parcels are assayed using gamma spectrometry. Assay results are used to calculate plutonium content and decay heat (plus error). Some drums having a low level of activity are assayed with LLNL's High Sensitivity Neutron Instrument, located in Building 331. LLNL may use other instruments, such as active and passive neutron detectors, gamma spectrometers, or an active and

passive computed tomography gamma scanner to meet the isotopic characterization and fissile content requirements. The site transportation certification official (TCO) shall evaluate the compliance of the fissile material mass and plutonium curies of payload containers with the maximum limits.

10.0 DECAY HEAT AND HYDROGEN GAS GENERATION RATES

This section describes the logic and methodology used in evaluating payload characteristics that meet the hydrogen gas concentration requirement for the LL 116A and LL 116B content codes for the LLNL CH-TRU wastes described in this section.

10.1 Requirements

The hydrogen gas concentration shall not exceed 5% by volume in all void volumes within the CNS 10-160B cask payload during a 60-day shipping period. A CNS 10-160B Cask payload must be assembled of payload containers belonging to the same content code. Payload containers of different content codes with different bounding G values and resistances may be assembled together as a payload, provided the decay heat limit and hydrogen gas generation rate limit for all payload containers within the payload is conservatively assumed to be the same as that of the payload container with the lowest decay heat limit and hydrogen gas generation rate limit.

10.2 Methodology of Ensuring Compliance with Flammable Gas Concentration Limits

As stated in Section 7.2, chemical, biological, and thermal gas generation mechanisms are insignificant in the CNS 10-160B cask. In addition, as shown in Section 5.1, potentially flammable VOCs are restricted to 500 ppm in the headspace of the CNS 10-160B cask secondary containers. Therefore, the only flammable gas of concern for transportation purposes is hydrogen. The concentration of hydrogen within any void volume in a layer of confinement of the payload or in the cask IV has been evaluated during a 60-day shipping period (see Attachment C of Appendix 4.10.2).

Attachment A provides the TRU waste content code for the LLNL TRU wastes that are included in the authorized payload for the CNS 10-160B cask. This content code has a unique and completely defined packaging configuration. Modeling the movement of hydrogen from the waste material to the payload voids, using the release rates of hydrogen through the various confinement layers, defines the relationship between generation rate and void concentration. This modeling allows determination of the maximum allowable hydrogen generation rate for the LL 116A and LL 116B content codes to meet the 5% concentration limit, as detailed in Section 10.3. Based on hydrogen gas generation potential, quantified by hydrogen gas generation G values, the gas concentration limit can be converted to a decay heat limit, as detailed in Section 10.4. The maximum allowable hydrogen generation rates and decay heat limits for the LLNL content code for different payload assembly configurations are listed in Table 10-1 (see Attachment A of Appendix 4.10.2 for a description of the Matrix Depletion Program and dose-dependent G values).

10.3 Determination of Maximum Allowable Hydrogen Generation Rates for Content Codes

The maximum allowable hydrogen generation rates were determined using the modeling methodology described in Appendix 4.10.2 and the following input parameters.

Table 10-1. Maximum Allowable Hydrogen Gas Generation Rates and Decay Heat Limits

Content Code/ Payload Configuration	Maximum Allowable Hydrogen Gas Generation Rate, mole/second /drum	Maximum Allowable Hydrogen Gas Generation Rate, moles/second/ cask	Maximum Allowable Decay Heat Limit, Watts/Drum (Dose <= 0.012 watt*year)	Maximum Allowable Decay Heat Limit, Watts/Cask (Dose <= 0.012 watt*yr)	Maximum Allowable Decay Heat Limit, Watts/Drum (Dose > 0.012 watt*year)	Maximum Allowable Decay Heat Limit, Watts/Cask (Dose > 0.012 watt*year)
LL 116A	8.268×10^{-9}	4.961×10^{-8}	0.020	0.120	0.059	0.354
LL 116B Standard drum filter (3.7×10^{-6} mole/sec/mole fraction) (6 waste drums per cask)	7.360×10^{-8}	4.416×10^{-7}	0.182	1.092	0.533	2.26
LL 116B High diffusivity drum filter (1.85×10^{-5} mole/sec/mole fraction) (6 waste drums per cask)	1.412×10^{-7}	8.472×10^{-7}	0.275	1.650	0.807	2.26
LL 116B Standard drum filter (3.7×10^{-6} mole/sec/mole fraction) (3 waste drums per cask)	9.635×10^{-8}	2.890×10^{-7}	0.275	0.825	0.807	2.26
LL 116B High diffusivity drum filter (1.85×10^{-5} mole/sec/mole fraction) (3 waste drums per cask)	2.581×10^{-7}	7.742×10^{-7}	0.564	1.692	1.656	2.26

[a] Other limits applicable to the cask (not related to gas generation) shall also be met.

Waste Packaging Configuration and Release Rates: LL 116A: The waste described by LL 116A is packaged in 2 inner bags and 1 liner bag. The waste is then placed into a 55-gallon drum that may be lined with a polyethylene liner with a minimum 0.3-inch diameter hole. Six drums of waste will comprise the payload for the CNS 10-160B cask with the remainder being comprised of 55-gallon dunnage drums that allow free release of gas across the hole in the drum lid. Release rates of hydrogen through the drum filter, the drum polyethylene liner, the inner plastic bags, and the liner bags are summarized in Table 10-2.

LL 116B: The waste described by LL 116B assumes that the waste described in LL 116A has either been repackaged or that all inner plastic bag layers have been breached. The waste is placed into a 55-gallon drum that may be lined with a polyethylene liner with a minimum 1-inch diameter hole. Either three or six drums of waste will comprise the payload for the CNS 10-160B cask with the remainder being comprised of 55-gallon dunnage drums that allow free release of gas across the hole in the drum lid. Release rates of hydrogen through the drum filters and drum polyethylene liner are summarized in Table 10-2.

The release rates in Table 10-2 are shown for two different temperatures (minimum and maximum operating temperature of the CNS 10-160B) and are based on release rate values for various TRU waste packaging confinement layers documented in Appendices 3.6.9 and 3.6.12 of the TRUPACT-II SAR (Reference 12.1). The temperature dependence of these release rates is discussed later in this section.

Void Volume in the 10-160B Cask IV: The cask will have a payload of 10 drums and a drum carriage. The interior volume of the cask, V_{cask}, is 4438 liters. The volume occupied by the drum carriage, $V_{carriage}$, is 143.2 liters. The external volume of a single drum, V_{drum}, is 235.7 liters. The void volume within the cask is calculated as:

$$V_{V,cask} = V_{cask} - V_{carriage} - 10\ V_{drum} + n_{dunnage}\ (208\ liters)$$

$$V_{V,cask} = 4438\ liters - 143.2\ liters - 10\ (235.7\ liters) + n_{dunnage}\ (208\ liters)$$

$$V_{V,cask}\ 1938\ liters + n_{dunnage}\ (208\ liters)$$

where,

$n_{dunnage}$ = number of 55-gallon dunnage drums

Pressure: The pressure is assumed to be isobaric and equal to one atmosphere. The mole fraction of hydrogen in each void volume would be smaller if pressurization is considered and would result in a greater maximum allowable hydrogen gas generation rate. Furthermore, the amount of hydrogen gas generated during a 60-day shipping period would be negligible compared to the quantity of air initially present at the time of sealing the CNS 10-160B cask.

Temperature: The input parameter affected by temperature is the release rate through the different confinement layers in the payload containers and the G values for hydrogen. For the LL 116A waste content code, these are the release rates across plastic bags, the filter on the drum and the release rate across the 0.3-inch-diameter hole on the rigid polyethylene drum liner. For the LL 116B waste content code, these are the filters on the drums and the release rate across the 1-inch diameter hole on the rigid polyethylene drum liner. These release rates increase with increasing temperature as documented in Appendix 3.6.12 of the TRUPACT-II SAR (Reference 12.1). Therefore, the minimum release rates

Table 10-2. Release Rates of Hydrogen

Content Code Payload Configuration	Confinement Layer	Release Rate (mol/sec/mol fraction)	
		T = 233K	T = 348.6K
LL 116A	Drum filter	2.46×10^{-6}	4.98×10^{-6}
	Inner bag	3.895×10^{-7}	5.58×10^{-7} [a]
	Liner bag	4.67×10^{-6}	4.67×10^{-6} [b]
	Polyethylene Liner (0.3-inch hole)	4.695×10^{-5}	5.09×10^{-5}
LL 116B (3.7×10^{-6} mole/sec/mf drum filter)	Polyethylene Liner (1.0-inch hole)	5.20×10^{-4}	5.66×10^{-4}
	Standard Drum Filter	2.46×10^{-6}	4.98×10^{-6}
LL 116B (1.85×10^{-5} mole/sec/mf drum filter)	Polyethylene Liner (1.0-inch hole)	5.20×10^{-4}	5.66×10^{-4}
	High Diffusivity Drum Filter	1.23×10^{-5}	2.49×10^{-5}

(a) The value at 70°F is conservatively used.
(b) This is the minimum measured value and is applicable to all temperatures.

would be those at the lowest operating temperature. These are the release rates indicated in Table 10-2 for 233K. The minimum decay heat limits are determined by the ratio of the release rates and the G values. In other words, the higher the release rates, the higher the decay heat limit; the higher the G value, the lower the decay heat limit. The dependence of G values on temperature is documented in Section 10.4. For determining the decay heat limit, the temperature that yielded the minimum decay heat limit was used as the input parameter.

In summary, the temperature dependence of the input parameters was accounted for in the calculation so that, in each case, the minimum possible limit (hydrogen generation rate or decay heat limit) was obtained. This provides an additional margin of safety in the analysis for the LL 116A and LL 116B content codes.

10.4 Determination of Maximum Allowable Decay Limits

The maximum allowable decay heat limits for the CH-TRU waste content codes, LL 116A and LL 116B, were calculated using the methodology described in Appendix 4.10.2 and the content-code specific G value described below.

G values are determined based on the bounding materials present in the payload. The maximum operating temperature yields the lowest decay heat limits for the operating temperature range of the CNS 10-160B cask. Content codes LL 116A and LL 116B represent solid organic debris consisting of various combustible and non-combustible items. The material present in this waste with the highest G value at the maximum operating temperature of the CNS 10-160B cask (168°F) is cellulosics and is therefore considered as the bounding material. The G value for hydrogen associated with cellulosics is 3.2 molecules/100eV (at 70°F) if the attained dose is less than or equal to 0.012 watt*year. The dose dependent G value for cellulosics is 1.09 molecules/100 eV if the dose attained in the drum is greater than 0.012 watt*yr. The methodology associated with the determination of dose-dependent G values pursuant

to the Matrix Depletion Program is further discussed in Attachment A of Appendix 4.10.2. The G values at 70°F are adjusted to the maximum operating temperature of the CNS 10-160B cask (168°F) using the Arrhenius equation. The activation energy of the G value for cellulosics is 2.1 kcal/mole. Thus, at the maximum operating temperature of the CNS 10-160B cask (168°F), the bounding hydrogen G values for the LLNL content codes are 5.61 molecules/100 eV (dose ≤ 0.012 watt*year) and 1.91 molecules/100 eV (dose > 0.012 watt*year).

10.5 Methodology for Compliance with Payload Assembly Requirements

LLNL assays drums in Building 332 using an SGS, or a combination of calorimetry and gamma counting. In Building 251, individual waste parcels are assayed using gamma spectrometry. Assay results are used to calculate the decay heat (plus error). Some drums having a low level of activity are assayed with LLNL's High Sensitivity Neutron Instrument, located in Building 331. LLNL may use other instruments, such as active and passive neutron detectors, gamma spectrometers, or an active and passive computed tomography gamma scanner to establish the decay heat of the drum. The TCO shall evaluate the compliance of individual drums and the total of all drums with the maximum limits per drum and per cask.

If compliance with the decay heat limit cannot be demonstrated, the hydrogen generation rate of the container shall be determined and compared to the hydrogen gas generation rate limit specified for the LL 116A content code. If the container meets the limit, it is eligible for shipment if all other transportation requirements are met. If the container does not meet the limit, it cannot be shipped and shall be segregated for repackaging or other mitigation measures.

Compliance with the hydrogen gas generation rate shall be demonstrated by testing. Compliance with the requirements of the test plan described below must be documented in procedures under a quality assurance program.

10.5.1 Gas Generation Test Methodology

The following describes how compliance with the limit on the hydrogen gas generation rate will be implemented for LLNL content codes.

Demonstration of Compliance With Hydrogen Gas Generation Limit

During the course of the testing, the headspace gas of the selected waste containers will be sampled and analyzed to determine the concentrations of hydrogen and other gases that are produced by radiolysis or present when the waste was packaged. Sampling lines that communicate with the headspace of the waste containers will be installed. Samples of the headspace gas will be withdrawn periodically and analyzed using a gas chromatograph and/or a mass spectrometer. The analytical results will be used to calculate the hydrogen gas generation rate. The measured hydrogen gas generation rate will be compared to the appropriate hydrogen gas generation limits to evaluate compliance with transportation requirements.

Because all layers of confinement in all the containers have been vented since the time of packaging and the containers have been in a vented condition for a period of time, steady-state hydrogen concentrations exist within all void volumes inside a container. At steady-state conditions, the rate of gas generation by radiolysis equals the release rate of gas across each layer of confinement. The measured hydrogen gas concentration in the headspace gas will be used to calculate the hydrogen gas generation rate.

The hydrogen gas generation rate of the waste container is calculated from the measured hydrogen gas concentration using the following relationship:

$$C_g = X_H \times L_{CF}$$

where,

C_g = the hydrogen gas generation rate (mole/sec)
X_H = the measured concentration of hydrogen gas in the waste container headspace (mole fraction)
L_{CF} = diffusion characteristic of the waste container filter.

The actual drum hydrogen gas generation rate will be compared to the maximum allowable hydrogen generation rate limit in Table 10-1 of this appendix. The container shall be qualified for shipment only if the limit is met.

The TCO shall ensure that the CNS 10-160B cask payload consists of payload containers belonging to the same content code. In the event that payload containers of different content codes with different bounding G values and resistances are assembled together in the CNS 10-160B cask, the TCO shall ensure that the decay heat and hydrogen gas generation rate for all payload containers within the payload are less than or equal to the limits associated with the payload container with the lowest decay heat limit and hydrogen gas generation rate limit.

11.0 WEIGHT

11.1 Requirements

The weight limit for the contents of the loaded cask is 14,500 pounds.

11.2 Methods of Compliance and Verification

The LLNL shall weigh each payload container and contents on a calibrated scale to determine the total weight of the payload container. Based on the total measured weight of the individual payload containers and the payload carriage, LLNL shall calculate total assembly weight and evaluate compliance with the maximum contents weight limit.

12.0 REFERENCES

12.1 U.S. Department of Energy (DOE), “Safety Analysis Report for the TRUPACT-II Shipping Package,” and associated TRUPACT-II Authorized Methods for Payload Control (TRAMPAC) Current Revision, U.S. Department of Energy Carlsbad Field Office, Carlsbad, New Mexico.

Attachment A

Transuranic Content Code and Chemical List
for Lawrence Livermore National Laboratory (LLNL)

CONTENT CODE: LL 116

CONTENT DESCRIPTION: TRU Combustible Waste

GENERATING SITE: Lawrence Livermore National Laboratory (LLNL)

STORAGE SITE: LLNL.

WASTE DESCRIPTION: The waste consists of glovebox bagout waste, non-glovebox-line generated laboratory trash, some contaminated equipment and some sealed sources. The waste may occasionally include small quantities of solidified liquids, especially if it is mixed waste, but this is usually segregated.

GENERATING SOURCE: The waste originates from LLNL Building 251.

WASTE FORM: The waste consists mostly of dry solids such as tissues, paper, assorted plastics, glassware, ceramics, and metals. Portland cement or Aquaset is used to solidify water-based liquids; Envirostone or Petroset is used to solidify small amounts of solvents and oil-based liquids.

WASTE PACKAGING: Details of the waste packaging for each content code are presented in the following table:

WASTE PACKAGING DESCRIPTION TABLE

Code	Description*
LL 116A	The waste is placed in two plastic bags, then placed in a 55-gallon drum fitted with a vented high density polyethylene rigid liner, itself lined inside with a third large plastic bag. Bags and liners are either polyvinyl chloride or polyethylene. All bag closures are by twist-and-tape or fold-and-tape method.
LL 116B	The waste is placed directly in a 55-gallon drum fitted with a vented high density polyethylene rigid liner. Any inner plastic bag layers are either open or breached

METHODS FOR DETERMINATION OF ISOTOPIC CHARACTERIZATION: LLNL assays drums in Building 332 using an SGS, or a combination of calorimetry and gamma counting. In Building 251, individual waste parcels are assayed using gamma spectrometry. Assay results are used to calculate the decay heat (plus error). Some drums having a low level of activity are assayed with LLNL's High Sensitivity Neutron Instrument, located in Building 331. LLNL may use other instruments, such as active and passive neutron detectors, gamma spectrometers, or an active and passive computed tomography gamma scanner to establish the decay heat of the drum. The TCO shall evaluate the compliance of individual drums and the total of all drums with the maximum limits per drum and per cask.

FREE LIQUIDS: Liquids are solidified according to procedure and allowed to cure before final sealing of the drum. LLNL has certified that the waste contains less than 1% by volume of free liquids.

EXPLOSIVES/COMPRESSED GASES: LLNL has certified that the waste does not contain any explosives or compressed gases. LLNL procedures call for all aerosol cans to be punctured before placement in a TRU waste drum.

PYROPHORICS: LLNL has certified that the waste does not contain any pyrophorics.

CORROSIVES: LLNL has certified that the waste does not contain any corrosive materials.

CHEMICAL COMPATIBILITY: A chemical compatibility study has been performed on this content code, and all waste is chemically compatible for materials in greater than trace (>1% weight) quantities.

ADDITIONAL CRITERIA: Each drum is fitted with a minimum of one filter vent.

MAXIMUM ALLOWABLE HYDROGEN GENERATION RATES — OPTION 1: The maximum allowable hydrogen generation rates are listed in the table below for the various payload configurations.

MAXIMUM ALLOWABLE WATTAGE — OPTION 2: The maximum allowable decay heat limits are listed in the table below for the various payload configurations.

Maximum Allowable Hydrogen Generation Rates and Decay Heat Limits for LL 116A						
Content Code/ Payload Configuration	**Maximum Allowable Hydrogen Gas Generation Rate, mole/second/ drum**	**Maximum Allowable Hydrogen Gas Generation Rate, moles/second/ cask**	**Maximum Allowable Decay Heat Limit, Watts/Drum (Dose <= 0.012 watt*year)**	**Maximum Allowable Decay Heat Limit, Watts/Cask (Dose <= 0.012 watt*yr)**	**Maximum Allowable Decay Heat Limit, Watts/Drum (Dose > 0.012 watt*year)**	**Maximum Allowable Decay Heat Limit, Watts/Cask (Dose > 0.012 watt*year)**
LL 116A 3.7×10^{-6} mole/sec/mole fraction drum filter (6 waste drums per cask)	8.268×10^{-9}	4.961×10^{-8}	0.020	0.120	0.059	0.354
LL 116B 3.7×10^{-6} mole/sec/mole fraction drum filter (6 waste drums per cask)	7.360×10^{-8}	4.416×10^{-7}	0.182	1.092	0.533	2.26
LL 116B 1.85×10^{-5} mole/sec/mole fraction drum filter (6 waste drums per cask)	1.412×10^{-7}	8.472×10^{-7}	0.275	1.650	0.807	2.26
LL 116B 3.7×10^{-6} mole/sec/mole fraction drum filter (3 waste drums per cask)	9.635×10^{-8}	2.890×10^{-7}	0.275	0.825	0.807	2.26
LL 116B 1.85×10^{-5} mole/sec/mole fraction drum filter (3 waste drums per cask)	2.581×10^{-7}	7.742×10^{-7}	0.564	1.692	1.656	2.26

LAWRENCE LIVERMORE NATIONAL LABORATORY
CONTENT CODE LL 116A and LL 116B
TRU COMBUSTIBLE WASTE
MATERIALS AND CHEMICALS >1%

CLOTH
GLASS, LABWARE
GRAPHITE (Molds and Crucibles)
METALS (including mercury, brass, lead shielding, lead shot, silver, stainless steel, aluminum, iron, copper beryllium, and zirconium)
PAPER
POLYETHYLENE
RUBBER
RUBBER GLOVES
SOLIDIFICATION AGENTS/ABSORBANTS (Portland Cement, Aquaset, Petroset, Envirostone)
STAINLESS STEEL

Appendix 4.10.2.5

Compliance Methodology for TRU Waste From
Idaho National Engineering and Environmental Laboratory (INEEL)
Idaho Falls, ID

1.0 INTRODUCTION

This appendix presents the methods used to qualify approximately 620 drums of remote-handled (RH) transuranic (TRU) waste stored at Idaho National Engineering and Environmental Laboratory (INEEL) as payload for transport in the CNS 10-160B cask. The methods for determining each restricted parameter, the factors influencing the parameter values, and the methods used by INEEL for demonstrating compliance, are provided in the following sections. This appendix also includes the following as attachment:

- Content codes ID 322A, 322B, 325A and 325B (Attachment A)
- Chemical lists for content codes ID 322A, 322B, 325A and 325B (Attachment A).

2.0 PURPOSE

The purpose of this appendix is to describe the methods used to qualify the RH-TRU waste stored at INEEL prior to transport in the CNS 10-160B cask and is based on the format and requirements for TRU waste identified in Appendix 4.10.2 of the CNS 10-160B cask Safety Analysis Report (SAR). Acceptable methods and process knowledge applicable to content codes ID 322A, 322B, 325A, and ID 325B are described in this appendix. Process knowledge (PK) (also referred to as acceptable knowledge (AK) for the purposes of this document) refers to applying knowledge of the waste in light of the materials or processes used to generate the waste.

Section 3.0 describes the TRU waste payload. Sections 4.0 through 11.0 discuss each payload parameter and the methods employed to demonstrate compliance with the CNS 10-160B cask payload requirements.

3.0 TRU WASTE PAYLOAD FOR CNS 10-160B CASK

The content codes for the RH-TRU waste stored at INEEL (ID 322A and 322B - Solid Inorganic Waste and ID 325A and 325B - Solid Organic Waste) are provided in Attachment A. These content codes apply to approximately 620 30-gallon drums of waste at the INEEL from the destructive and non-destructive examination of radiological materials such as fuel pins, reactor structural materials, and targets in the Argonne National Laboratory-East (ANL-E) Alpha Gamma Hot Cell Facility (AGHCF) between 1971 and 1995.

Complete documentation packages along with quality assurance and quality control records are generated for all payload containers as summarized in this appendix. TRU waste shipped from the INEEL will comply with all transportation requirements using the following methods:

- Formally documented AK of the processes generating the waste, including data packages generated for payload containers that document the contents and properties of the waste in the container including the absence of prohibited items and compliance with packaging requirements

- Measurement of required parameters to ensure compliance with limits.

4.0 PHYSICAL FORM

4.1 Requirements

The physical form of waste comprising the CNS 10-160B cask payload is restricted to solid or solidified materials in secondary containers. The total volume of residual liquid in a secondary container is

restricted to less than 1% by volume. Secondary containers must be shored to prevent movement during accident conditions. Sharp or heavy objects in the waste shall be blocked, braced, or suitably packaged as necessary to provide puncture protection for the payload containers packaging these objects. Sealed containers (e.g., rigid plastic containers, plastic bags, metal containers) greater than four liters in volume that do not have a known, measured, or calculated hydrogen release rate or resistance are prohibited.

4.2 Methods of Compliance and Verification

Compliance with the physical form requirements will be determined using AK (i.e., records and data base information). AK documentation for drums containing waste described by content codes ID 322A, 322B, 325A, and ID 325B (Reference 12.1) indicates that the physical form requirements have been met. Liquid chemicals were neutralized, if necessary, and absorbed resulting in no free liquid. Waste packaging records show that sharp and heavy objects have been packaged to provide puncture protection equivalent to Type A packaging requirements and there are no pressurized containers in the waste. The calculated hydrogen release rate for heat-sealed confinement layers greater than four liters in volume that may be present in the payload container is listed in Section 10 of this appendix.

5.0 CHEMICAL FORM AND CHEMICAL PROPERTIES

5.1 Requirements

The chemical properties of the waste are determined by the chemical constituents allowed in a given content code. Specific requirements regarding the chemical form of the waste are as :

- Explosives, nonradioactive pyrophorics, compressed gases, and corrosives are prohibited.
- Pyrophoric radionuclides may be present only in residual amounts less than 1 weight percent.
- The total amount of potentially flammable volatile organic compounds (VOCs) present in the headspace of a secondary container is restricted to 500 parts per million.

5.2 Methods of Compliance and Verification

PK documentation (Reference 12.1) details the compliance with the chemical form and chemical property restrictions. Explosives, pyrophorics, and compressed gases including aerosol cans were prohibited from RH-TRU waste containers. Sodium and sodium potassium (NaK) metal were rendered safe by controlled reaction with ethanol or butanol. The resulting product was absorbed on pelletized clay and evaporated to dryness prior to disposal. All potentially corrosive liquid chemicals were neutralized and absorbed prior to packaging; therefore, the waste would not be considered corrosive. All organic liquids were evaporated to dryness before packaging. The chemical lists for content codes ID 322A, 322B, 325A and ID 325B are presented in Attachment A.

6.0 CHEMICAL COMPATIBILITY

6.1 Requirements

Each content code has an associated chemical list (Attachment A) based on AK information. Chemical constituents in a payload container assigned to a given content code shall conform to these approved chemical lists. Chemicals and materials that are not listed are allowed in trace amounts (quantities less than one weight percent) in a payload container provided that the total quantity of trace chemicals or materials is restricted to less than five weight percent. Chemical compatibility of a waste with its packaging ensures that chemical reactions will not occur that might pose a threat to the safe transport of a payload in the CNS 10-160B cask.

6.2 Methods of Compliance and Verification

Attachment B of Appendix 4.10.2 presents the methodology and results for the chemical compatibility analyses performed for the list of allowable chemicals and materials associated with the TRU waste content codes expected to be shipped in the CNS 10-160B cask. The results of these chemical compatibility analyses show that these content codes can be transported without any incompatibilities. The chemicals present in ID 322A, 322B, 325A, and ID 325B conform to the list of allowable materials in Attachment B of Appendix 4.10.2. Therefore, the waste meets the chemical compatibility requirements.

7.0 GAS DISTRIBUTION AND PRESSURE BUILDUP

7.1 Requirements

Gas distribution and pressure buildup during transportation of TRU waste in the CNS 10-160B cask payload are restricted to the following limits:

- The gases generated in the payload must be controlled to prevent the occurrence of potentially flammable concentrations of gases within the payload confinement layers and the void volume of the inner vessel (IV) cavity. Specifically, the hydrogen concentrations within the payload confinement layers are limited to five percent by volume during the shipping period (see Attachment C of Appendix 4.10.2 of the CNS 10-160B SAR).

- The gas generated in the payload and released into the IV cavity must be controlled to maintain the pressure within the IV cavity below the acceptable packaging design limit of 31.2 pounds per square inch (psig).

7.2 Methods of Compliance and Verification

Compliance with the CNS 10-160B cask design pressure limit for each content code described in Attachment A is analyzed by assuming all gases generated are released into the IV cavity and by including the contributions from thermal expansion of gases and vapor pressure of atmospheric water. The maximum effective total gas G value is described by that of cellulose and is evaluated at the maximum operating temperature of 168°F using the Arrhenius equation given the room temperature G value and an activation energy is 2.1 kcal/gmol (Reference 12.2, Appendix 3.1). Table 7-1 shows that the pressure increase during a period of 365 days is below the design pressure limit of 31.2 psig for all

content codes listed in Attachment A. Compliance with the restrictions on flammable gas concentration is discussed in Section 10.0.

Table 7-1 Maximum Pressure Increase In Cask IV Over 365-Day Shipping Period

	No Matrix Depletiona			Matrix Depletionb		
Content Code	Geff,, molecules per 100eV	Decay Heat Limit per Cask (W)c	ΔPtot (psig)	Geff,, molecules per 100eV	Decay Heat Limit per Cask (W)c	ΔPtot (psig)
ID 322A	17.86	3.26e-1	12.2	14.19	1.17e-0	19.9
ID 322B	17.86	1.81e-0	31.1	14.19	2.28e-0	31.1
ID 325A	17.86	6.48e-2	8.9	14.19	2.35e-1	10.5
ID 325B	17.86	5.94e-1	15.7	14.19	2.06e-0	28.9

a. Geff @ 70°F: 10.2 molecules per 100 eV; Activation Energy: 2.1 kcal/mol (Ref. 12.2, Appx 3.2)
b. Geff @ 70°F: 8.1 molecules per 100 eV; Activation Energy: 2.1 kcal/mol (Ref. 12.2, Appx 3.2)
c. Ten waste drums per cask.

8.0 PAYLOAD CONTAINER AND CONTENTS CONFIGURATION

8.1 Requirements

Thirty-gallon and 55-gallon secondary containers may be used as payload containers in the CNS 10-160B cask. Secondary containers must be shored to prevent movement during accident conditions. The available volume of the cask cavity limits the number of payload containers that may be shipped at one time. Up to ten 30-gallon or 55-gallon drums of TRU waste may be packaged in the cask. Payload containers and any sealed container liners greater than four liters in volume used to package waste inside the containers must have at least one filter vent with a minimum allowable hydrogen diffusivity listed in Table 8.1. A rigid polyethylene liner, if present in a payload container, shall have an opening that is equivalent to or larger than a 0.3-inch diameter hole (or equivalent filter vent) before the container is transported in the CNS 10-160B. The typical waste packaging configuration is shown below.

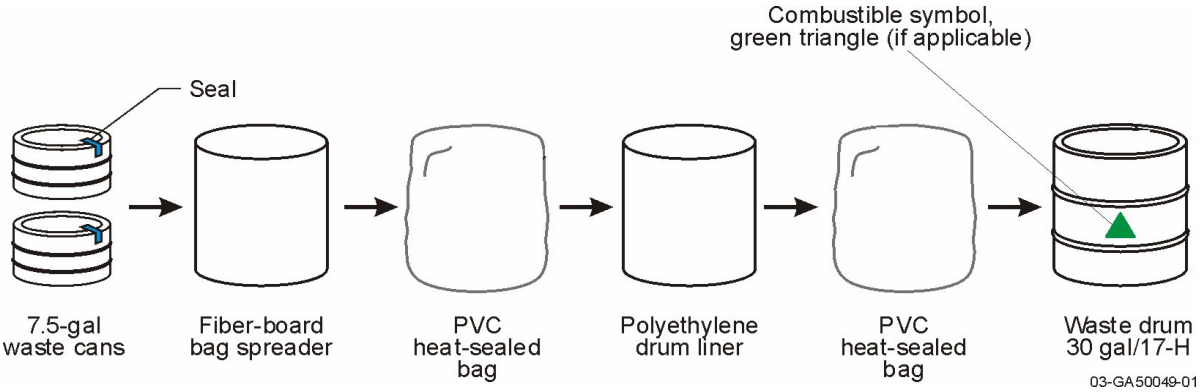

The 7.5-gallon waste cans are not sealed containers because holes were drilled in the sides of the cans to allow a cable to be attached (Reference 12.1, Appendix 4.10.2.5). The fiberboard bag spreader, which is situated between the waste cans and the PVC bag, is open on top. Neither the waste cans nor the fiberboard bag spreader inside the innermost PVC bag are considered confinement layers.

Sealed bags are closed with a twist-and-tape, fold-and-tape, or heat-sealed closure. Heat-sealed bags may have a filter vent or be unvented.

Table 8-1 Minimum Filter Vent Specifications

Container Filter Type	Minimum Flow Rate (mL/min air, STP, inch water)a	Efficiency (percent)	Hydrogen Diffusivity @ 25°C (mol/s/mol fraction)

Drum	35	99.9b	3.70e-6
Bag	35	---b	1.075e-5

a. Filters tested at a different pressure (other than 1 in water) shall have a proportional flow rate (Reference 12.3 , CH-TRAMPAC, Table 2.5-1).

b. Filters installed in payload containers that are overpacked in a drum are exempt from the efficiency requirement (Reference 12.3 , CH-TRAMPAC, Table 2.5-1).

8.2 Methods of Compliance and Verification

Compliance with the payload container and contents configuration requirements is determined by visual examination, process knowledge, and through procurement records. The methods used to determine the compliance of filter vents with the performance-based requirements of flow rate, efficiency, and hydrogen diffusivity shall be directed by procedures under a quality assurance program. Filter vents shall be legibly marked to ensure identification of the supplier as well as the date of manufacture, lot number, or unique serial number.

9.0 ISOTOPIC CHARACTERIZATION AND FISSILE CONTENT

9.1 Requirements

The CNS 10-160B cask payload allows 325 FGE of fissile materials. Plutonium content in excess of 0.74 TBq (20 curies) per cask must be in solid form.

9.2 Methods of Compliance and Verification

Compliance with the isotopic characterization and fissile content requirements involves the following steps:

- Determination of the isotopic composition
- Determination of the quantity of radionuclides
- Calculation of the fissile mass and comparison with 10 CFR 71.15 limits
- Calculations of plutonium content and comparison with 20-curie limit.

9.2.1 Isotopic composition

The isotopic composition of the waste may be determined from direct measurements taken on the product material during processing or post-process certification at each site, analysis of the waste, or from existing records and AK. The isotopic composition of the waste need not be determined by direct analysis or measurement of the waste unless AK is not available.

9.2.2 Quantity of Radionuclides

The quantity of the radionuclides in each payload container shall be estimated by either AK or direct measurement of the individual payload containers, a summation of assay results from individual packages in a payload container, or a direct measurement on a representative sample of the quantity of nuclear material in TRU wastes. Assay instruments detect and quantify the primary radiation (alpha, gamma, and or neutron) emanating from specific radionuclides, or a secondary radiation emitted from neutron interrogation techniques. The measured quantity of radiation is then used to calculate the quantity of other radionuclides. That calculation requires knowledge of the isotopic composition of the waste. Combinations of gamma spectroscopy and neutron measurements are often needed to calculate the quantity of nonfissile radionuclides.

9.2.3 Calculation of Fissile Mass

The calculation of the fissile mass shall be performed to meet the 325 FGE requirement.

9.2.4 Calculation of Plutonium Curies

The total plutonium (all plutonium isotopes) activity (curies) for each payload container shall be determined as described above, summed for the entire payload and compared with the 20-curie waste form limit.

10. DECAY HEAT AND HYDROGEN GAS GENERATION RATES

10.1 Requirements

The hydrogen gas concentration shall not exceed 5% by volume in all void volumes within the CNS 10-160B cask payload during the 60-day shipping period. Payload containers of different content codes with different bounding G values and resistances may be assembled together as a payload, provided the decay heat limit and hydrogen gas generation rate limit for all payload containers within the payload is conservatively assumed to be the same as that of the payload container with the lowest decay heat limit and hydrogen gas generation rate limit.

10.2 Methodology of Ensuring Compliance with Flammable Gas Limits

As stated in Section 7.2 of Appendix 4.10.2, chemical, biological, and thermal gas generation mechanisms are considered to be insignificant in the CNS 10-160 cask. In addition, as shown in Section 5.1 of Appendix 4.10.2, potentially flammable VOCs are restricted to no more than 500 ppm in the headspace of the CNS 10-160B cask secondary containers. Therefore, the only flammable gas of concern for transportation purposes is hydrogen. The hydrogen concentration within the void volumes of the payload confinement layers or the cask IV has been evaluated for a specified shipping period.

Attachment A of this appendix provides the TRU waste content codes for the INEEL RH TRU that are included in the authorized payload for the CNS 10-160B cask. Each content code has a unique and completely defined packaging configuration. The movement of hydrogen from the waste material and across waste confinement layers to the payload voids can be modeled to determine the maximum allowable hydrogen gas generation rate to ensure the 5% by volume concentration is not exceeded in any of the void volumes inside the waste drums or CNS 10-160B cask. Based on the hydrogen gas generation potential of the waste, quantified by hydrogen gas generation G values, the hydrogen gas generation limit can be expressed as an equivalent decay heat limit. The shippability of a waste drum regarding flammable gases can be determined by comparing its decay heat to the content code-specific decay heat limit listed in Table 10-1. If the decay heat limit is exceeded, the hydrogen gas generation rate in the waste drum can be calculated based on measured hydrogen concentration in the waste drum or a container in which the waste drum is placed, as detailed in Section 10.5.

Table 10-1 Maximum allowable hydrogen gas generation rates and decay heat limits.

Content Code	Hydrogen Gas Generation Rate Limit per Drum (mol/s)	Hydrogen Gas Generation Rate Limit per Cask (mol/s)	Decay Heat Limit per Drum, W (Dose ≤ 0.012 W-yr)	Decay Heat Limit per Cask,W (Dose ≤ 0.012 W-yr)	Decay Heat Limit per Drum, W (Dose > 0.012 W-yr)	Decay Heat Limit per Cask,W (Dose > 0.012 W-yr)
ID 322A	3.61e-9	3.61e-8	3.26e-2	3.26e-1	1.17e-1	1.17e-0
ID 322B	3.28e-8	3.28e-7	2.97e-1	1.81e-0	1.02e-0	2.28e-0
ID 325A	3.61e-9	3.61e-8	6.48e-3	6.48e-2	2.35e-2	2.35e-1
ID 325B	3.28e-8	3.28e-7	5.94e-2	5.94e-1	2.06e-1	2.06e-0

10.3 Determination of Maximum Allowable Hydrogen Generation Rates

The modeling methodology for determining the maximum allowable hydrogen gas generation rate limits is presented in this section. Parameters that impact the maximum allowable hydrogen gas generation rate limit are:

- Waste packaging configuration (i.e., the number and type of confinement layers)
- Release rates of hydrogen from each confinement layer
- Void volume in the cask IV available for gas accumulation
- Operating temperature and pressure for the payload in the 10-160B cask IV during the shipping period
- Duration of the shipping period

Waste Packaging Configuration:
ID 322A, ID 325A: The waste is packaged in two 7.5-gallon metal cans, a fiber drum pouch spreader, an inner polyvinyl chloride (PVC) pouch, a polyethylene drum liner, an outer PVC pouch, and a 17H 30-gallon drum with a high-efficiency particulate air (HEPA) filter vent or an opening in the drum lid. The PVC pouches are heat-sealed.

ID 322B, ID 325B: The waste is packaged in two 7.5-gallon metal cans, a fiber drum pouch spreader, an inner PVC pouch with a HEPA filter vent, a polyethylene drum liner, an outer PVC pouch with a HEPA filter vent, and a 17H 30-gallon drum with a HEPA filter vent or an opening in the drum lid.

Two shipping scenarios are considered:
1. The 30-gallon waste drums are placed directly in the 10-160B cask.
2. Each 30-gallon drum is placed directly in a 55-gallon drum with a filter vent installed on each drum. Ten drums will then be placed into the CNS 10-160B cask.

In defining the hydrogen gas generation limits, the second shipping scenario bounds the first scenario; thus, this waste packaging configuration is used to define the maximum allowable hydrogen generation rates.

<u>Release Rates from Confinement Layers:</u>
The hydrogen release rate across a heat-sealed polymer bag (RR) is a function of hydrogen permeability, ρ, across the PVC bag, the permeable surface area (Ap), bag thickness (xp), and gas concentration at standard temperature and pressure (STP) (Reference 12.2, Appendix 6.13). Specifically,

$$\mathrm{RR} = \frac{\rho \mathrm{A_p P_g}}{\mathrm{x_p}} \frac{mole}{22{,}400 cm^3 (STP)}$$

where

RR	release rate of hydrogen (mole H_2/s/mole fraction H_2
ρ	hydrogen permeability, cm3(STP) cm-1 (cm Hg)-1 s-1
Ap	permeable surface area, cm2
Pg	gas pressure, cm Hg
xp	bag thickness, cm

The temperature dependence of gas permeability across a polymer can be defined by an Arrhenius equation:

$$\rho = \rho_0 \exp\left(\frac{-E_a}{RT}\right)$$

where Ea is the activation energy (kcal) associated with gas permeability, R is the gas constant defined as 1.987e-3 kcal/(mol K), and T is absolute gas temperature (K). For a hydrogen permeability for polyvinyl chloride of 3.6e-10 cm3(STP) cm-1 (cm Hg)-1 s-1 at 77°F (298.2 K) (Reference 12.2, Appendix 6.13) with an activation energy of 1.9 kcal/mole, the constant ρ0 can be defined to 8.89e-9 cm3 (STP) cm-1 (cm Hg)-1 s-1. The effect of temperature of the hydrogen release rate is demonstrated below.

Void Volume in the 10-160B cask IV: The minimum void volume in the cask when filled with the maximum number of ten (10) 55-gallon waste drums is estimated to be 1,938 L (Appendix 4.10.2.3 of CNS 10-160B SAR).

Permeable Surface Area and Thickness of PVC Confinement Layers: The minimum permeable surface area inside the 30-gallon waste drum was calculated based on the waste drum configuration described in Reference 12.1. The permeable surface area of a PVC confinement layer is defined by its minimum height and diameter. The maximum outside diameters of the 7.5-gallon steels cans and polyethylene drum liner is 15 in (38.1 cm) and 18 in (45.7 cm), respectively. The 30-gallon drum has a useable height of 28 in (71.1 cm). The diameters of the inner and outer PVC confinement layers are assumed to be 16 in (40.6 cm) and 17 cm (43.2 cm), respectively. Because of the presence of a fiberboard pouch spreader and polyethylene liner, the heights of the inner and outer PVC confinement layers are assumed to be 26 in (66.0 cm) and 27 in (68.6 cm), respectively. The dimensions of the inner confinement layer, assumed to be that of a cylinder, are used to define the surface of both PVC confinement layers. The surface area along the side and top of the cylinder defined the total surface area. The permeable area of each PVC layer was calculated to be 9,700 cm2 and its thickness is 20 mils (0.0508 cm).

Pressure: The pressure is assumed to be isobaric and equal to one atmosphere. The mole fraction of hydrogen in each void volume would be smaller if pressurization is considered and would result in a greater maximum allowable hydrogen gas generation rate. Furthermore, the amount of hydrogen gas generated during the shipping would be negligible compared to the quantity of air initially present at the time of closure of the 10-160B cask.

Temperature: In order to account for effect of temperature on gas permeability across a PVC confinement layer, an average gas permeability is defined over the operating temperature range. The maximum and minimum operating temperatures in the 10-160B cask have been assumed to be 168°F (348.7 K) and -40°F (233.2 K), respectively. In order to provide an additional margin of safety, an average hydrogen permeability, ρavg, was determined over the lower temperature range of 77°F (298.2 K) and -40°F (233.2 K).

$$\rho_{avg} = \frac{\int_{233.2K}^{298.2K} \rho_0 \exp\left(\frac{-E_a}{RT}\right) dT}{\int_{233.2K}^{298.2K} dT}$$

The average hydrogen permeability equals 2.46e-10 cm3 (STP) cm-1 (cm Hg)-1 s-1, which is equivalent to maintaining a constant temperature of 20°F (266.5 K).

Temperature-corrected hydrogen diffusivity values across filter vents (D*) used on drums and in heat-sealed bags were calculated at 20°F (266.5 K). The gas diffusivity across a filter vent at an absolute

temperature T2 can be defined in terms of the hydrogen diffusivity across the same filter vent at a known absolute temperature T1(Reference 12.2, Appendix 6.9)

$$D^*_{T_2} = D^*_{T_1}\left(\frac{T_2}{T_1}\right)^{1.75}$$

The release rates across confinement layers used in the analysis are listed in Table 10-2.

Table 10-2. Hydrogen Release Rates Across Confinement Layers

Content Codes	Confinement Layer	Release Rate (mol/s/mol fraction)	
		T = 266.5 K	T = 298.2 K
ID 322A ID 325A	55-gal Drum Filter Vent	3.04e-6	3.70e-6
	30-gal Drum Filter Vent	3.04e-6	3.70e-6
	Each Heat-Sealed Bag	1.59e-7	2.33e-7
ID 322B ID 325B	55-gal Drum Filter Vent	3.04e-6	3.70e-6
	30-gal Drum Filter Vent	3.04e-6	3.70e-6
	Each Heat-Sealed Bag w/Filter Vent	8.99e-6	1.10e-5

10.4 Determination of Maximum Allowable Decay Heat Limits

The maximum allowable decay heat limits for content codes ID 322A, ID 322B, ID 325A, and ID 325B were calculated using the modeling methodology described in Section 10.4 of Appendix 4.10.2 and the content-code specific G values described below.

The gas-generation potential of a waste stream depends on the waste composition as well as the type of radiation that strikes the waste material. The radiation-specific effective G-values for each waste stream are calculated based on the maximum G-value for organic waste and the relative fraction of organic waste in the waste stream (Reference 12.2, Appendix 3.2). Waste streams designated to contain inorganic (noncombustible) or organic (combustible) solid waste contain at least 80% of the designated material (Reference 12.1). In calculating a G value for drums containing organic waste (ID 325A and ID 325B) , the drums are conservatively assumed to contain 100% combustible, hydrogenous material. Drums containing inorganic waste (ID 322A and ID 322B), the drums are assumed to contain a maximum of 20% hydrogenous material.

For waste drums in which the total dose has not exceed 0.012 W-yr, the maximum G value is based on cellulose and is determined at the maximum temperature (168°F) described by an Arrhenius equation (Reference 12.2, Appendix 3.1). Its G value at room temperature is 3.2 molecules per 100 eV with an activation energy of 2.1 kcal/mol. The maximum G value associated with solid organic waste is that of wet cellulose, which at room temperature is 1.09 molecules per 100 eV. Since matrix-depleted G values show no variation with temperature (Appendix 4.10.2, Attachment A), no temperature correction of these G values are made. Effective G values used to calculate decay heat limits are summarized in Table 10-3.

Table 10-3. Effective G-values by radiation type and content code.

	Content Code			
	ID 325A, ID 325B		ID 322A, ID 322B	
Radiation Type	**No Matrix Depletion**	**Matrix Depletion**	**No Matrix Depletion**	**Matrix Depletion**
Alpha	5.61	1.09	1.12	0.22
Beta	5.61	1.09	1.12	0.22
Gamma	5.61	5.61	1.12	1.12

G-value units: molecules per 100eV absorbed energy

10.5 Methodology for Compliance with Payload Assembly Requirements

10.5.1. Gas Generation Test Methodology

A waste drum in which its decay heat exceeds the maximum allowable decay heat limit can be shipped if the hydrogen gas generation in the waste drum can be demonstrated to be less than the maximum allowable hydrogen generation limit listed in Table 10-1 of this appendix. During the interim between drum retrieval and drum shipment, gas sample can be collected directly from the waste drum or from the container in which the vented waste drum is packaged. The measured hydrogen concentration can be related to the generation rate in the waste drum. Material balance equations are defined for different sampling scenarios from: (1) a vented 30-gallon waste drum; (2) a vented 55-gallon waste drum; or (3) a vented overpack container.

Direct Measurement of Hydrogen in Waste Drum

Vented waste drums in storage for over nine years are assumed to be at steady state. If a gas sample is collected directly from a waste drum, the gas generation rate is assumed to equal the hydrogen release rate across the filter vent:

$$C_g = X_{HS,H_2} D^*_{H_2}$$

where

Cg hydrogen gas generation rate, mol/s
XHS,H2 hydrogen mole fraction in drum headspace
D*H2 hydrogen diffusivity of drum filter vent, mol/s/mol fraction

The actual hydrogen concentration in a previously unvented waste drum asymptotically approaches its steady-state value with increasing vent time. If the hydrogen concentration from a newly vented drum is greater than the steady-state concentration, it will result in a higher (more conservative) calculated hydrogen gas generation rate.

Waste Drum Inside a Vented Waste Container

In cases where a vented waste drum (wd) is placed in a vented waste container (wc), a gas sample can be collected from the waste container headspace. The hydrogen concentration in the waste container headspace is determined by solving the following material balance equations:

$$\frac{dX_{wd}}{dt} = \frac{C_g}{N_{wd}} - \frac{RR^*_{wd}}{N_{wd}}\left(X_{wd} - X_{wc}\right)$$

$$\frac{dX_{wc}}{dt} = \frac{RR^*_{wd}}{N_{wc}}\left(X_{wd} - X_{wc}\right) - \frac{RR^*_{wc}}{N_{wc}} X_{wc}$$

where

X	hydrogen mole fraction in the innermost confinement layer of waste drum (wd) or container (wc)
RR*	hydrogen release rate across all confinement layers in waste drum or container
N	total moles gas in waste drum (wd) or container (wc)

In the case of the waste drum, there are multiple confinement layers defined by the heat-sealed bags and drum filter vent. The hydrogen release rate across multiple confinement layers is defined as the inverse of the sum of the effective hydrogen resistance , Reff, across each confinement layer.

$$RR^* = \left[\sum_i R_{eff,i}\right]^{-1}$$

In the waste container, the hydrogen release rate is defined solely by that of its filter vent, which is the inverse of the hydrogen diffusivity across the filter vent. The total moles, N, in any volume (V) is defined by the ideal gas law:

$$N = \frac{PV}{RT}$$

where

P’	gas pressure, atm
V	gas volume, liter (L)
R’	gas constant = 0.08206 atm l/(mol K)

The two differential equations above are identical in form to differential equations describing flammable gas generation in a container with two void volumes (Reference 12.2, Appendix 3.10). The analytical solution for these equations are described by Equations (5) through (9) in Reference 12.2, Appendix 3.10 and can be used to define the solutions to the differential equations. The resulting solution defines the relationship between the measured hydrogen concentration in the waste container at time t and the hydrogen gas generation rate. The value of hydrogen gas generation rate in the waste drum can be iterated in the equation defining hydrogen concentration in the waste container headspace until the calculated hydrogen concentration equals the measured value in the waste container headspace.

The initial hydrogen concentration in the waste container, Xwc(0), is zero. It is assumed that the vented waste drum is at steady state when placed inside the waste container. In this case, the initial hydrogen concentration in the waste drum is defined as:

$$X_{wd}(0) = \frac{C_g}{RR^*_{wd}}$$

The steady-state case bounds the situation when the hydrogen concentration in the newly vented waste drum may exceed its steady-state concentration. In this case, the hydrogen release rate will be greater than that in the steady-state case. This means hydrogen accumulation in the waste container headspace will occur more quickly, resulting in a calculated hydrogen generate rate greater than would be calculated in the case of the waste drum at steady state.

Waste Drum Inside Two Waste Containers
In the case where a waste drum is placed inside two consecutive vented waste containers, a gas sample can be collected from the headspace of the outer vented waste container. The material balance equations that describe hydrogen accumulation in the waste drum (wd), an inner waste container (iwc), and an outer waste container (owc), respectively, are:

$$\frac{dX_{wd}}{dt} = \frac{C_g}{N_{wd}} - \frac{RR^*_{wd}}{N_{wd}}(X_{wd} - X_{iwc})$$

$$\frac{dX_{iwc}}{dt} = \frac{RR^*_{wd}}{N_{iwc}}(X_{wd} - X_{iwc}) - \frac{RR^*_{iwc}}{N_{iwc}}(X_{iwc} - X_{owc})$$

$$\frac{dX_{owc}}{dt} = \frac{RR^*_{iwc}}{N_{owc}}(X_{iwc} - X_{owc}) - \frac{RR^*_{owc}}{N_{owc}}X_{owc}$$

At time zero, the waste drum is assumed to have been at steady state when placed inside the waste containers; therefore, Xwd(0) = Cg/RR*wd. The initial values, Xiwc(0) and Xowc(0) equal zero. At time t, the hydrogen concentration in the outer waste container headspace, Xowc, is measured.

The three differential equations above are identical in form to differential equations describing flammable gas generation for a container with three void volumes (Reference 12.2, Appendix 3.10). The analytical solution for these equations are described by Equations (16) through (34) in Reference 12.2 (Appendix 3.10) and can be used to determine the hydrogen gas generation rate based on the measured hydrogen concentration in the outer waste container headspace at time t. The value of hydrogen gas generation rate can be iterated in the equation defining hydrogen concentration in the outer waste container headspace until the calculated hydrogen concentration equals the measured value.

It is assumed that the vented waste drum is at steady state when placed inside the two waste containers. In this case, the initial hydrogen concentration in the waste drum is defined by same equation as in the case of waste in one waste container. As in the case of a waste drum inside one waste container, the steady state case bounds the situation when the hydrogen concentration in the newly vented waste drum may exceed its steady-state concentration.

11.0 WEIGHT

11.1 Requirements

The weight limit for the contents of the loaded cask is 14,500 pounds.

11.2 Methods of Compliance and Verification

The INEEL shall weigh each payload container and contents on a calibrated scale to determine the total weight of the payload container. Based on the total measured weight of the individual payload containers and the payload carriage, INEEL shall calculate total assembly weight and evaluate compliance with maximum contents weight limit.

12.0 REFERENCES

12.1 IT Corporation, "AK Documentation Report for INEEL-Stored Remote-Handled Transuranic Waste from Argonne National Laboratory-East," Revision 0, July 2003, IT Corporation, Albuquerque, New Mexico.

12.2 U. S. Department of Energy (DOE), CH-TRU Payload Appendices, Current Revision, U.S. Department of Energy Carlsbad Field Office, Carlsbad, New Mexico.

12.3 U. S. Department of Energy (DOE), Contact-Handled Transuranic Waste Authorized Methods for Payload Control (CH-TRAMPAC), Current Revision, U.S. Department of Energy Carlsbad Field Office, Carlsbad, New Mexico.

Attachment A

Transuranic Content Codes and Chemical Lists
for Idaho National Engineering and Environmental Laboratory

CONTENT CODE: ID 322A, ID 322B

CONTENT DESCRIPTION: Solid Inorganic Waste

WASTE DESCRIPTION: This waste consists primarily of a variety of inorganic debris.

GENERATING SOURCES: This waste is generated at the Argonne National Laboratory-East (ANL-E) Alpha Gamma Hot Cell Facility (AGHCF) between November 1971 and November 1995 during the processing of irradiated and unirradiated fuel pins from various reactor programs at ANL-W [Experimental Breeder Reactor-II (EBR-II)] and other U.S. Department of Energy (DOE) reactors, such as the New Production Reactor at the Savannah River Site (SRS). The AGHCF is a hot cell complex that includes office space, shielded gloveboxes, a hot cell under nitrogen atmosphere with work stations for remote manipulation of materials, and a Decontamination/Repair Area (DRA).

WASTE FORM: The waste consists of ferrous metals, including carbon and stainless steel and cast iron; nonferrous metals, including aluminum, brass, bronze, copper, lead, and tin; glass bottles, tubing, beakers, and plates; ceramic firebrick; porcelain (insulators); quartz; Vycor; boron nitride; and "passivated chemicals" absorbed in clay. Waste was contaminated primarily with fissile materials, MFP, and activation products. The predominant radionuclides are: Pu-239, Pu-240, Pu-241, Am-241, U-235, U-238, Cs-137, Ba-137m, Sr-90, Y-90, Co-60, and Fe-55.

WASTE PACKAGING:
ID 322A: The waste is packaged in two 7.5-gallon metal cans, a fiber drum pouch spreader, an inner PVC pouch, a polyethylene drum liner, an outer PVC pouch, and a 17H 30-gallon drum with a filter vent or an opening in the drum lid. The PVC pouches are heat-sealed. The inner PVC pouch is placed inside a rigid polyethylene liner without a lid. The liner and its contents are then heat-sealed inside the outer PVC pouch.

ID 322B: The waste is packaged in two 7.5-gallon metal cans, a fiber drum pouch spreader, an inner PVC pouch with a HEPA filter vent, a polyethylene drum liner, an outer PVC pouch with a filter vent, and a 17H 30-gallon drum with a filter vent or an opening in the drum lid. The inner PVC pouch is placed inside a rigid polyethylene liner without a lid. The liner and its contents are then heat-sealed inside the outer PVC pouch.

In addition, the 30-gallon drum may be placed within a vented 55-gallon waste drum.

METHODS FOR DETERMINATION OF ISOTOPIC CHARACTERIZATION: The isotopic composition of the waste is determined from process loss calculations and fission product calculations and was recorded on the associated forms or in data management systems. Therefore, the isotopic composition of the waste need not be determined by direct analysis or measurement of the waste unless process information is not available.

FREE LIQUIDS: Liquid waste is prohibited in the drums except for residual amounts in well-drained containers. The total volume of residual liquid in a payload container shall be less than 1 volume percent of the payload container. Waste packaging procedures ensure that free liquids are less than 1 volume percent of the payload container.

EXPLOSIVE/COMPRESSED GASES: Explosives and compressed gases in the payload containers are prohibited by waste packaging procedures.

PYROPHORICS: Sodium and NaK were passivated with alcohol and the alcohol absorbed into pelletized clay and evaporated. Other pyrophorics such as Zircalloy were sorted to segregate from WIPP waste containers.

CORROSIVES: Corrosives are prohibited in the payload container. Etchant solutions were neutralized and absorbed in pelletized clay rendering the solution noncorrosive prior to being a part of the waste. The physical form of the waste and the waste generating procedures ensure that the waste is in a nonreactive form.

CHEMICAL COMPATIBILITY: A chemical compatibility study has been performed on this content code, and all waste is chemically compatible for materials in greater than trace (>1% by weight) quantities.

ADDITIONAL CRITERIA: The sum of the hydrogen diffusivity of all drum filter vents per drum lid (30-gallon or 55-gallon), if present, is equal to or greater than 3.70e-06 mol/s/mol fraction at 25°C. The drum lid opening, if present, has an equivalent diameter equal to or greater than 0.3 in. Each bag filter vent, if present, has a minimum hydrogen diffusivity of 1.075e-05 mol/s/mol fraction at 25°C.

MAXIMUM ALLOWABLE HYDROGEN GENERATION RATES - OPTION 1: For ID 322A, the maximum allowable hydrogen generation rate limit is 3.61E-09 moles per second per drum and 3.61E-08 moles per second per CNS 10-160B cask. For ID 322B, the maximum allowable hydrogen generation rate limit is 3.28E-08 moles per second per drum and 3.28E-07 moles per second per CNS 10-160B cask.

MAXIMUM ALLOWABLE DECAY HEAT LIMIT - OPTION 2: For ID 322A, the maximum allowable decay heat limit is 3.26e-02 watts per drum and 3.26e-01 watts per CNS 10-160B cask if the total dose is less than or equal to 0.012 watt-yr and 1.17e-01 watts per drum and 1.17 watts per CNS 10-160B cask if the total dose is greater than 0.012 watt-yr. For ID 322B, the maximum allowable decay heat limit is 2.97e-01 watts per drum and 1.81 watts per CNS 10-160B cask if the total dose is less than or equal to 0.012 watt-yr and 1.02 watts per drum and 2.28 watts per CNS 10-160B cask if the total dose is greater than 0.012 watt-yr.

IDAHO NATIONAL ENGINEERING AND ENVIRONMENTAL LABORATORY CONTENT
CODE ID 322A
SOLID INORGANIC WASTE

MATERIALS AND CHEMICALS >1%

Aluminum
boron nitride
Brass
brick
Ceramic firebrick
Clay, pelletized
concrete
Ferrous metals (including carbon and stainless steels, cast iron)
Glass
HEPA FILTERS
Nonferrous metals (including aluminum, barium, brass, bronze, cadmium, chromium, copper, lead, mercury, selenium, and tin)
Organic debris (≤ 20 volume %)
porcelain
quartz
STEEL
Vycor

MATERIALS AND CHEMICALS <1%

Toluene

CONTENT CODE: ID 325A, ID 325B

CONTENT DESCRIPTION: Solid Organic Waste

WASTE DESCRIPTION: This waste consists primarily of a variety of combustible debris.

GENERATING SOURCES: This waste is generated at the Argonne National Laboratory-East (ANL-E) Alpha Gamma Hot Cell Facility (AGHCF) between November 1971 and November 1995 during the processing of irradiated and unirradiated fuel pins from various reactor programs at ANL-W [Experimental Breeder Reactor-II (EBR-II)] and other U.S. Department of Energy (DOE) reactors, such as the New Production Reactor at the Savannah River Site (SRS). The AGHCF is a hot cell complex that includes office space, shielded gloveboxes, a hot cell under nitrogen atmosphere with workstations for remote manipulation of materials, and a Decontamination/Repair Area (DRA).

WASTE FORM: The waste consists of neoprene gloves and O-rings, polyethylene and polypropylene bottles; plastic tubing (including PVC, polyethylene, rubber, and styrene butadiene); PVC, polyurethane, and polyethylene bagging pouches; silicone and Teflon O-rings; paper products; cotton and synthetic rags; polyethylene and PVC sheeting; wood products (including masonite); neoprene, koroseal, and rubber gaskets; and a variety of plastics and cellulosics. Waste was contaminated primarily with fissile materials, mixed fission products (MFP), and activation products. The predominant radionuclides are: plutonium (Pu)-239, Pu-240, Pu-241, americium (Am)-241, uranium (U)-235, U-238, cesium (Cs)-137, barium (Ba)-137m, strontium (Sr)-90, yttrium (Y)-90, cobalt (Co)-60, and iron (Fe)-55.

WASTE PACKAGING:
ID 325A: The waste is packaged in two 7.5-gallon metal cans, a fiber drum pouch spreader, an inner PVC pouch, a polyethylene drum liner, an outer PVC pouch, and a 17H 30-gallon drum with a filter vent or an opening in the drum lid. The PVC pouches are heat-sealed. The inner PVC pouch is placed inside a rigid polyethylene liner without a lid. The liner and its contents are then heat-sealed inside the outer PVC pouch.

ID 325B: The waste is packaged in two 7.5-gallon metal cans, a fiber drum pouch spreader, an inner PVC pouch with a HEPA filter vent, a polyethylene drum liner, an outer PVC pouch with a filter vent, and a 17H 30-gallon drum with a filter vent or an opening in the drum lid. The inner PVC pouch is placed inside a rigid polyethylene liner without a lid. The liner and its contents are then heat-sealed inside the outer PVC pouch.

In addition, the 30-gallon drum may be placed within a vented 55-gallon waste drum.

METHODS FOR DETERMINATION OF ISOTOPIC CHARACTERIZATION: The isotopic composition of the waste is determined from process loss calculations and fission product calculations and was recorded on the associated forms or in data management systems. Therefore, the isotopic composition of the waste need not be determined by direct analysis or measurement of the waste unless process information is not available.

FREE LIQUIDS: Liquid waste is prohibited in the drums except for residual amounts in well-drained containers. The total volume of residual liquid in a payload container shall be less than 1 volume percent of the payload container. Waste packaging procedures ensure that free liquids are less than 1 volume percent of the payload container.

EXPLOSIVE/COMPRESSED GASES: Explosives and compressed gases in the payload containers are prohibited by waste packaging procedures.

PYROPHORICS: Sodium and NaK were passivated with alcohol and the alcohol absorbed into pelletized clay and evaporated. Other pyrophorics such as Zircalloy were sorted to segregate from WIPP waste containers.

CORROSIVES: Corrosives are prohibited in the payload container. Etchant solutions were neutralized and absorbed in pelletized clay rendering the solution noncorrosive prior to being a part of the waste. The physical form of the waste and the waste generating procedures ensure that the waste is in a noncreative form.

CHEMICAL COMPATIBILITY: A chemical compatibility study has been performed on this content code, and all waste is chemically compatible for materials in greater than trace (>1% by weight) quantities.

ADDITIONAL CRITERIA: The sum of the hydrogen diffusivity of all drum filter vents per drum lid (30-gallon or 55-gallon), if present, is equal to or greater than 3.70e-06 mol/s/mol fraction at 25°C. The drum lid opening, if present, has an equivalent diameter equal to or greater than 0.3 in. Each bag filter vent, if present, has a minimum hydrogen diffusivity of 1.075e-05 mol/s/mol fraction.

MAXIMUM ALLOWABLE HYDROGEN GENERATION RATES - OPTION 1: For ID 325A, the maximum allowable hydrogen generation rate limit is 3.61E-09 moles per second per drum and 3.61E-08 moles per second per CNS 10-160B cask. For ID 325B, the maximum allowable hydrogen generation rate limit is 3.28E-08 moles per second per drum and 3.28E-07 moles per second per CNS 10-160B cask.

MAXIMUM ALLOWABLE DECAY HEAT LIMIT - OPTION 2: For ID 325A, the maximum allowable decay heat limit is 6.48e-03 watts per drum and 6.48e-02 watts per CNS 10-160B cask if the total dose is less than or equal to 0.012 watt-yr and 2.35e-02 watts per drum and 2.35e-01 watts per CNS 10-160B cask if the total dose is greater than 0.012 watt-yr. For ID 325B, the maximum allowable decay heat limit is 5.94e-02 watts per drum and 5.94e-01 watts per CNS 10-160B cask if the total dose is less than or equal to 0.012 watt-yr and 2.06e-01 watts per drum and 2.06 watts per CNS 10-160B cask if the total dose is greater than 0.012 watt-yr.

IDAHO NATIONAL ENGINEERING AND ENVIRONMENTAL LABORATORY CONTENT CODE ID 325A
SOLID ORGANIC WASTE

MATERIALS AND CHEMICALS >1%

cellulosics
clay, pelletized
Cotton
inorganic debris (including power cords, ≤ 20 volume %)
koroseal
Neoprene
plastic
polyethylene
polypropylene
PVC
Polyurethane
Paper
rubber
Silicone
styrene butadiene
synthetic rags
Teflon
wood (including masonite)

MATERIALS AND CHEMICALS <1%

Toluene

5. SHIELDING EVALUATION

5.1 Discussion and Results

5.1.1 Operating Design

The Model 10-160B packaging consists of a lead and steel containment vessel which provides the necessary shielding for the various radioactive materials to be shipped within the package. (Refer to Section 1.2.3 for packaging contents.) Tests and analysis performed under chapters 2.0 and 3.0 have demonstrated the ability of the containment vessel to maintain its shielding integrity under normal conditions of transport. Prior to each shipment, radiation readings will be taken based on individual loadings to assure compliance with applicable regulations as determined in 10CFR71.47 (see Section 7.1, step 13c).

The 10-160B will be operated under "exclusive use" such that the contents in the cask will not create a dose rate exceeding 200 mrem/hr on the cask surface, or 10 mrem/hr at two meters from the cask surface. The package shielding must be sufficient to satisfy the dose rate limit of 10CFR71.51(a) (2) which states that any shielding loss resulting from the hypothetical accident will not increase the external dose rate to more than 1000 mrem/hr at one meter from the external surface of the cask.

5.1.2 Shielding Design Features

The cask side wall consists of an outer 2-inch thick steel shell surrounding 1 7/8 inches of lead and an inner containment shell wall of 1 1/8-inch thick steel.

The primary cask lid consists of two steel layers with a total thickness of 5½ inches. The lid closure is made in a stepped configuration to eliminate radiation streaming at the lid/cask body interface.

A secondary lid is located at the center of the main lid, covering a 31-inch opening. The secondary lid is constructed of steel plates with a total thickness of 5½ inches with multiple steps machined in its periphery. These steps match those in the primary lid, eliminating radiation streaming pathways.

The cask bottom has an identical shielding effectiveness to the cask lids. It also consists of two layers of steel with a total thickness of 5 ½ inches.

Foam filled impact limiters cover the top and bottom of the vertically oriented cask. The impact limiters are conservatively ignored for the purpose of the shielding evaluation.

5.1.3 Maximum Dose Rate Calculations

Table 5.1 gives both Normal Conditions of Transport (NCT) and Hypothetical Accident Conditions (HAC) dose rates resulting from the maximum point sources (neutron and gamma) which may be in contact with either the side wall or the top (or bottom) of the cask. Maximum allowable dose rates given in 10CFR71 are shown in Table 5.1 for comparison. The following assumptions were used to develop the values shown in the table.

5.1.3.1 Normal Conditions

- The source is conservatively modeled as a point source centered in the cask cavity.

5.1.3.2 Accident Conditions

- The source is modeled as a point source on the inner liner adjacent to the location of the lead slump and in contact with the lid.
- Lead slump (see Section 2.7.1.1) considers the effect of loss of lead shielding from the slumped region in the side wall.

Table 5.1
Summary of Maximum Dose Rates (mrem/hr)

	Package Surface		1 m from Surface		2m from 8' trailer
Condition	Side	Top/Bottom	Side	Top/Bottom	Side
NCT					
Neutron Source	114	86.3	N.A	N.A.	9.44
Gamma Source	126	179	N.A	N.A.	9.96
Allowable	200	200	N.A.	N.A.	10.0
HAC					
Neutron Source	N.A.	N.A.	82.7	39.5	N.A.
Gamma Source	N.A.	N.A.	144	99.9	N.A
Allowable	N.A.	N.A.	1000.0	1000.0	N.A

5.2 Source Specification

5.2.1 Methodology

A unit point source is placed at the cask center. A neutron source and a gamma source are evaluated independently. The dose rate from the unit source is determined at the cask outer surface and at 2m from the 8' wide trailer. The ratio between the dose limit and the calculated value is determined. An equivalent source is set equal to the activity of the unit source times the smallest ratio of the surface limit to the calculated dose rate from the unit source. This equivalent source, which is the largest activity source that meets the cask NCT dose limits, is then used to evaluate the effects of the hypothetical accident. If the HAC limits are met for the maximum activity source, the cask complies with the requirements of 10 CFR 71. A mixed gamma and neutron source will also comply as the sum of the gamma and neutron dose rates must be less than the NCT dose limit and thus, as shown for the independently evaluated sources, the HAC limits will be met.

5.2.2 Gamma Source

SCALE models of the 10-160B cask is evaluated with a Co-60 source. The resulting equivalent source, approximately 13.4 Ci, gives a gamma dose rate of approximately 9.96 mrem/hr at 2m from the 8' wide trailer.

5.2.3 Neutron Source

SCALE models of the 10-160B cask are evaluated with a Pu-Be neutron source. A ^{239}Pu-Be source produces neutrons at a rate of approximately 1.4E+06 n/sec per Ci (Ref. 5.6.3). A 325 FGE (approximately 20 Ci) ^{239}Pu-Be source will produce approximately 2.8E+07 n/sec. The equivalent neutron source, which produces a dose rate of 9.4 mrem/hr at 2m from the 8' wide trailer, has an emission rate of 1.1 E+08 n/sec. Thus, the equivalent source used for the dose rate calculation is larger than the fissile gram limit imposed by the criticality evaluation of Chapter 6 and gives a conservative dose rate result. The neutron energy spectrum for a Pu-Be source is shown below.

Neutron Energy Spectrum for a Pu-Be Source (Ref. 5.6.3)

Energy Interval, E_i (MeV)	Fraction of neutrons in E_i
0-0.5	0.038
0.5-1	0.049
1-1.5	0.045
1.5-2	0.042
2-2.5	0.046
2.5-3	0.062
3-6.5	0.459

6.5-10.5	0.259
Total	1.000

5.3 Model Specification

5.3.1 Description of Radial and Axial Shielding Configuration

Normal Conditions of Transport (NCT)
The walls of the 10-160B cask, 1.125" inner and 2" outer steel walls with a 1.875" lead layer between, are modeled as cylindrical shells around the cavity cylinder. The base and lid of the cask is a 5.5" steel plate. Impact limiters are conservatively ignored. This geometry is shown in Figure 5.1. In terms of shielding, the cask lid and bottom are the same so only one end is modeled. The cask is transported upright, i.e., with the axis of the cylinder vertical. Doses are evaluated at contact with the cask sidewall, with the cask lid, and at 2m from the 8' wide trailer.

Figure 5.1 NCT Cask Model

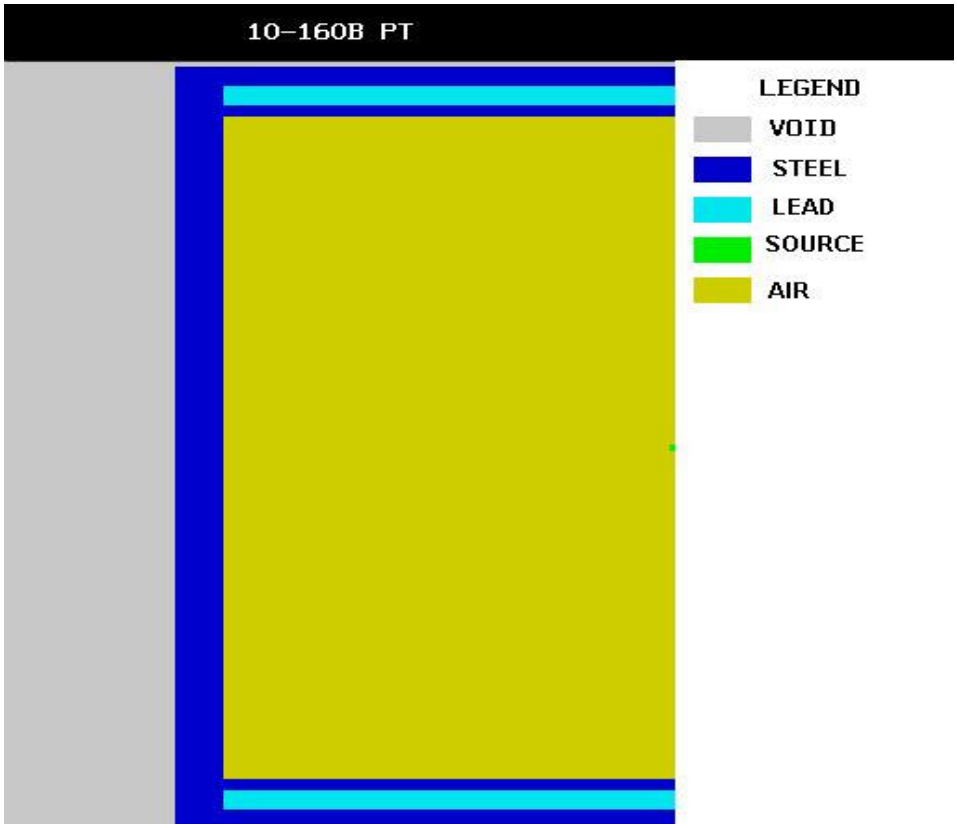

Hypothetical Accident Conditions (HAC)
As discussed in Section 2, the hypothetical accident conditions do not affect the geometry of the steel shells or the base or lid (see Section 5.3.1, above). The HAC model is shown in Figure 5.3. The lead slump

resulting from the 30' drop (< 0.02") discussed in Section 2.7.1.1, is included in the HAC model as a void 0.05 cm high at the top of the lead shell. Doses are determined at 1 m from the sidewall and the lid.

Figure 5.2 HAC Cask Model

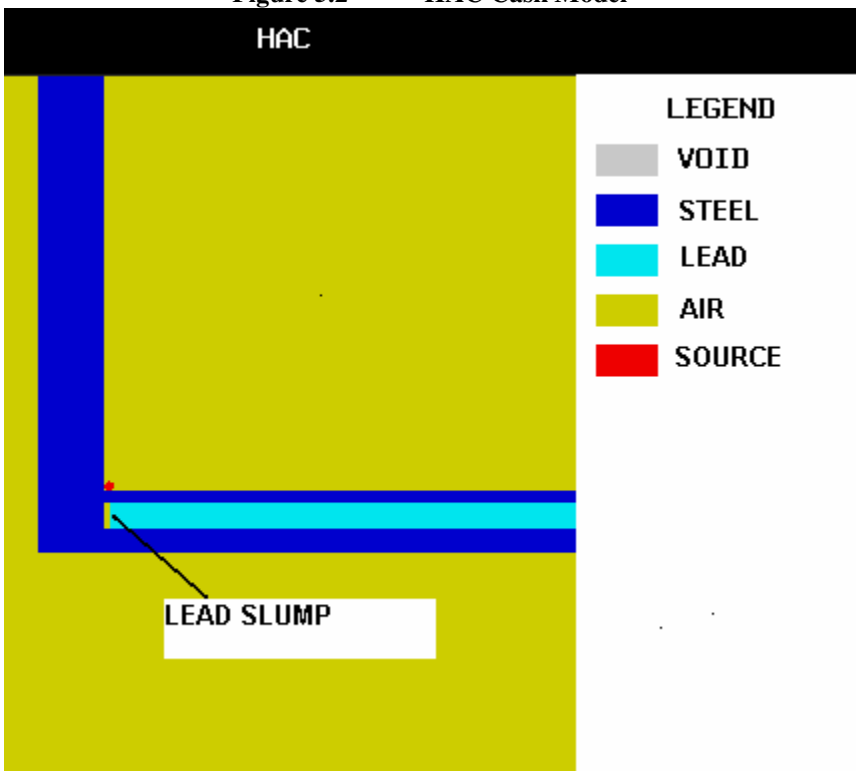

5.3.2 Material Properties

The properties of the cask materials are shown in Table 5.2

Table 5.2 Material Properties

Material	Composition	Density (g/cm^3)
Source	beryllium / cobalt	1.85 / 8.9
Cask inner wall	Steel	7.82
Cask outer wall	Steel	7.82
Cask shield layer	Lead	11.34

5.4. Shielding Evaluation

5.4.1. Methods

The gamma and neutron dose rates were calculated using SCALE, Module SAS4 (Ref.3), using the geometry described in Section 5.3. The dose locations are surface or point detectors at the cask surface or at 2m from the trailer for NCT and at 1m from the cask surface for HAC.

5.4.2. Input and Output Data

The SCALE input and output files are provided in 5.7. The input file lists the inputs that define the source dimensions, shield dimensions, materials and density, and source spectrum.

5.4.3. Flux-to-Dose-Rate Conversion

The flux to exposure rate conversion factors are listed in Table 5.3 and Table 5.4 (Ref. 5.6.2). These are the default conversion factors in SCALE.

Table 5.3 Gamma-Ray-Flux-To-Dose-Rate Conversion Factors

Photon Energy-E (MeV)	$DF_g(E)$ Rem/hr)/(photons/cm^2-s)
0.01	3.96-06
0.03	5.82-07
0.05	2.90-07
0.07	2.58-07
0.1	2.83-07
0.15	3.79-07
0.2	5.01-07
0.25	6.31-07
0.3	7.59-07
0.35	8.78-07
0.4	9.85-07
0.45	1.08-06
0.5	1.17-06
0.55	1.27-06
0.6	1.36-06
0.65	1.44-06
0.7	1.52-06
0.8	1.68-06
1.0	1.98-06
1.4	2.51-06
1.8	2.99-06
2.2	3.42-06
2.6	3.82-06
2.8	4.01-06
3.25	4.41-06
3.75	4.83-06
4.25	5.23-06
4.75	5.60-06
5.0	5.80-06
5.25	6.01-06
5.75	6.37-06
6.25	6.74-06
6.75	7.11-06
7.5	7.66-06
9.0	8.77-06
11.0	1.03-05
13.0	1.18-05
15.0	1.33-05

Table 5.4 Neutron Flux-To-Dose-Rate Conversion Factors And Mean Quality Factors ($\overline{QF}$)

Neutron Energy-E (MeV)	$\overline{QF}$*	$DF_n(E)$ (rem/hr) (n/cm^2-s)
2.5-08	2	3.67-06
1.0-07	2	3.67-06
1.0-06	2	4.46-06
10.-05	2	4.54-06
1.0-04	2	4.18-06
1.0-03	2	3.76-06
1.0-02	2.5	3.56-06
1.0-01	7.5	2.17-05
5.0-01	11	9.26-05
1.0	11	1.32-04
2.5	9	1.25-04
5.0	8	1.56-04
7.0	7	1.47-04
10.0	6.5	1.47-04
14.0	75	2.08-04
20.0	8	2.27-04

*Maximum value of QF in a 30-cm phantom.
#Read as 2.5 x 10^{-8}

5.4.4. External Radiation Levels

The SCALE model used to determine external radiation levels uses point or surface detectors to calculate the dose rates at various distances from the cask surface either radially or axially. The point detectors are aligned with the point sources, thus normally giving the maximum dose rates. The highest dose rate from the point or surface detectors is reported. Table 5.5 contains the maximum neutron and gamma dose rates found for each of the four cases, i.e., NCT radial, NCT axial, HAC radial, and HAC axial for each of the sources, neutron and gamma.

Table 5.5 Maximum External Radiation Levels

Normal Conditions of Transport	**Package Surface (mrem/h)**			**2 Meters from Cask (mrem/h)**
Radiation	Top	Side	Bottom	Side
Neutron Source	86.3	114	86.3	9.44
Gamma Source	179	126	179	9.96
10 CFR 71.47 Limit[1]	200	200	200	10

1. shipped as "exclusive use"

Hypothetical Accident Conditions	**1 Meter from Package Surface mSv/h (mrem/h)**		
Radiation	Top	Side	Bottom
Neutron Source	39.5	82.7	39.5
Gamma Source	99.9	143.6	99.9

10 CFR 71.51(a)(2) Limit	1000	1000	1000

5.5 Conclusion

The cask shielding must be able to limit the dose rate to 1000 mrem/hr at 1 meter from any surface of the cask after the cask goes through the hypothetical accident. This section demonstrates compliance with this requirement. Structural analysis (Section 2.0) demonstrates that the cask wall will not fail during the hypothetical accident. However, lead slump may occur during a drop giving an isolated region in the sidewall without lead. Lead slump cannot occur in the lid or bottom of the cask since lead is not present in these parts of the cask. The dose rate at 1 meter from the cask in the slumped region (assuming a localized lead void) was determined to be less than the 1000 mrem/hr limit for a source at the NCT dose rate limit. Normally, a shipper will apply a degree of conservatism to the NCT limits, typically 10-20%, to ensure compliance. Thus, the activity of the contents will be less than that assumed in the in the preceding analysis and dose rates under HAC will be less than the values predicted above.

5.6. References

5.6.1. SCALE: A Modular Code System for Performing Standardized Computer Analyses for Licensing Evaluations, NUREG/CR-0200, Rev.6 (ORNL/NUREG/CSD-2/R6), Vols. I, II, III, May 2000
5.6.2. ANSI/ANS 6.1.1-1977, "Neutron and Gamma-Ray Flux-to-Dose-Rate Factors."
5.6.3. Cember, H, *Introduction to Health Physics,* Pergamon Press, New York, 1987

5.7. SCALE Input Files for 10-160B Consolidated SAR Rev. 0

5.7.1. 10-160b-pt-axial-HAC.inp

```
'Input generated by Espn 89 Compiled on 06-07-2002
=sas4     parm=size=500000
10-160B pt axial
27n-18couple  infhommedium
 carbonsteel 1 1 293 end
 lead 2 1 293 end
 beryllium 3 1 293 end
 arbm-air 0.0002 2 0 0 0 7014 82 8016 18 4 1 293 end
 cobalt 5 1 293 end
end comp
 idr=0 ity=2 izm=5 isn=8 irf=9504 ifs=1 mhw=5 frd=86.36 szf=1  end
 86.36 89.218 93.98 99.06 199.06   end
 4 1 2 1 4   end
xend
 ran=000000091807 tim=120 nst=1000 nmt=4000 nit=1000 nco=4 ist=0 ipr=0
 iso=0 nod=16 sfa=1e+12 igo=4 inb=0 ine=0 mfu=5 isp=0 ipf=0 isd=4
 nda=1000  end
 soe 0 0 0 0 0 0 0 0 0 0 0 0 0 0 0 0 0 0 0 0 0 0 0 0 0 0 0 0 0 0 0 0 0
 0 0 22 78 0 0 0 0 0 0 0 0 end
 det 199.06 0 76.79 199.06 0 81.79 199.06 0 86.79 199.06 0 91.79 199.06
 0 96.79 199.06 0 101.79 199.06 0 106.79 199.06 0 111.79 199.06 0
 116.79 199.06 0 121.79 199.06 0 126.79 199.06 0 131.79 199.06 0
 136.79 199.06 0 141.79 199.06 0 146.79 199.06 0 151.79 end
 sdl 99.06 199.06 299.06 399.06 end
 sdr 70 120 70 140 70 90 70 90 end
 sds 10 0 14 36 0 0 0 0 end
 sxy 5 84.36 86.36 -1 1 95.79 97.79 86.36 97.79 99.06 111.76   end
gend
10-160b pt hac
 0 0 0 0
 sph 85.36 0 96.79 1
 rcc 0 0 -97.79 0 0 195.58 86.36
 rcc 0 0 -98.79 0 0 197.58 89.218
 rcc 0 0 -97.79 0 0 195.53 93.98
 rcc 0 0 -111.76 0 0 223.52 99.06
 sph 0 0 0 300
 sph 0 0 0 500
 rcc 0 0 -97.79 0 0 195.58 93.98
 rcc 0 0 -211.76 0 0 423.52 199.06
  end
 src +1
 cav +2 -1
 inn +3 -2
 shd +4 -3
 our +5 -8
 inv +6 -9
 exv +7 -6
 slp +8 -3 -4
 det +9 -5
  end
 1 1 1 1 1 1 1 1 1
 0 0 0 0 0 0 0 0 0
 5 4 1 2 1 1000 0 4 4
 0

end
```

5.7.2. 10-160b-pt-axial-igo0.inp

```
'Input generated by Espn 89 Compiled on 06-07-2002
=sas4     parm=size=500000
10-160B pt
27n-18couple  infhommedium
 carbonsteel 1 1 293 end
 lead 2 1 293 end
 beryllium 3 1 293 end
 arbm-air 0.0002 2 0 0 0 7014 82 8016 18 4 1 293 end
 cobalt 5 1 293 end
end comp
 idr=1 ity=2 izm=3 isn=8 irf=9504 ifs=1 mhw=4 frd=1 szf=1  end
 1 97.79 111.76   end
 5 4 1   end
xend
 ran=000000111507 tim=120 nst=1000 nmt=4000 nit=1500 nco=4 ist=0 ipr=0
 iso=0 nod=0 sfa=1e+12 igo=0 inb=0 ine=0 mfu=5 isp=0 ipf=0 isd=4
 nda=1000  end
 soe 0 0 0 0 0 0 0 0 0 0 0 0 0 0 0 0 0 0 0 0 0 0 0 0 0 0 0 0 0 0 0 0 0
 0 0 22 78 0 0 0 0 0 0 0 0 end
 sds 10 0 18 0 10 0 10 0 end
gend
point source
 fue 1 97.78 end
fend
 inn 1 89.218 98.79 end
 rs1 2 93.98 97.79 end
 our 1 99.06 111.76 end
 as1 1 89.218 99.79 end
 hol 1 end
 cav 4 86.36 97.79 end
cend
end
```

5.7.3. 10-160b-pt-HAC.inp

```
'Input generated by Espn 89 Compiled on 06-07-2002
=sas4     parm=size=500000
10-160B pt axial
27n-18couple  infhommedium
 carbonsteel 1 1 293 end
 lead 2 1 293 end
 beryllium 3 1 293 end
 arbm-air 0.0002 2 0 0 0 7014 82 8016 18 4 1 293 end
 cobalt 5 1 293 end
end comp
 idr=0 ity=2 izm=5 isn=8 irf=9504 ifs=1 mhw=5 frd=86.36 szf=1  end
 86.36 89.218 93.98 99.06 199.06   end
 4 1 2 1 4   end
xend
 ran=000000091807 tim=120 nst=1000 nmt=4000 nit=1000 nco=4 ist=0 ipr=0
 iso=0 nod=16 sfa=1e+12 igo=4 inb=0 ine=0 mfu=5 isp=0 ipf=0 isd=4
 nda=1000  end
 soe 0 0 0 0 0 0 0 0 0 0 0 0 0 0 0 0 0 0 0 0 0 0 0 0 0 0 0 0 0 0 0 0 0
 0 0 22 78 0 0 0 0 0 0 0 0 end
 det 199.06 0 76.79 199.06 0 81.79 199.06 0 86.79 199.06 0 91.79 199.06
 0 96.79 199.06 0 101.79 199.06 0 106.79 199.06 0 111.79 199.06 0
 116.79 199.06 0 121.79 199.06 0 126.79 199.06 0 131.79 199.06 0
 136.79 199.06 0 141.79 199.06 0 146.79 199.06 0 151.79 end
 sdl 99.06 199.06 299.06 399.06 end
 sdr 70 120 70 140 70 90 70 90 end
 sds 10 0 14 36 0 0 0 0 end
```

```
 sxy 5 84.36 86.36 -1 1 95.79 97.79 86.36 97.79 99.06 111.76   end
gend
10-160b pt hac
 0 0 0 0
 sph 85.36 0 96.79 1
 rcc 0 0 -97.79 0 0 195.58 86.36
 rcc 0 0 -98.79 0 0 197.58 89.218
 rcc 0 0 -97.79 0 0 195.53 93.98
 rcc 0 0 -111.76 0 0 223.52 99.06
 sph 0 0 0 300
 sph 0 0 0 500
 rcc 0 0 -97.79 0 0 195.58 93.98
 rcc 0 0 -211.76 0 0 423.52 199.06
  end
 src +1
 cav +2 -1
 inn +3 -2
 shd +4 -3
 our +5 -8
 inv +6 -9
 exv +7 -6
 slp +8 -3 -4
 det +9 -5
  end
 1 1 1 1 1 1 1 1 1
 0 0 0 0 0 0 0 0 0
 5 4 1 2 1 1000 0 4 4
 0

end
```

5.7.4. 10-160b-pt-igo0.inp

```
'Input generated by Espn 89 Compiled on 06-07-2002
=sas4     parm=size=500000
10-160B pt
27n-18couple  infhommedium
 carbonsteel 1 1 293 end
 lead 2 1 293 end
 beryllium 3 1 293 end
 arbm-air 0.0002 2 0 0 0 7014 82 8016 18 4 1 293 end
 cobalt 5 1 293 end
end comp
 idr=0 ity=2 izm=5 isn=8 irf=9504 ifs=1 mhw=4 frd=1 szf=1  end
 1 86.36 89.218 93.98 99.06   end
 5 4 1 2 1   end
xend
 ran=000000111207 tim=120 nst=1000 nmt=4000 nit=10000 nco=4 ist=0 ipr=0
 iso=0 nod=0 sfa=1e+12 igo=0 inb=0 ine=0 mfu=5 isp=0 ipf=0 isd=4
 nda=1000  end
 soe 0 0 0 0 0 0 0 0 0 0 0 0 0 0 0 0 0 0 0 0 0 0 0 0 0 0 0 0 0 0 0 0 0 0
 0 0 22 78 0 0 0 0 0 0 0 0 end
 sdl 99.06 199.06 322 344 end
 sdr 0 20 0 100 0 100 0 10 end
 sds 5 1 10 1 10 1 1 1 end
gend
point source
 fue 1 97.78 end
fend
 inn 1 89.218 98.79 end
 rs1 2 93.98 97.79 end
 our 1 99.06 111.76 end
```

```
 as1 1 89.218 99.79 end
 hol 1 end
 cav 4 86.36 97.79 end
cend
end
```

5.7.5. 10-160b-pt-n-axial-HAC.inp

```
'Input generated by Espn 89 Compiled on 06-07-2002
=sas4     parm=size=500000
10-160B pt neutron
27n-18couple  infhommedium
 carbonsteel 1 1 293 end
 lead 2 1 293 end
 beryllium 3 1 293 end
 arbm-air 0.0002 2 0 0 0 7014 82 8016 18 4 1 293 end
 cobalt 5 1 293 end
end comp
 idr=1 ity=1 izm=4 isn=8 irf=9029 ifs=1 mhw=3 frd=86.36 szf=1  end
 97.79 98.79 111.76 211.76   end
 4 1 1 4   end
xend
 ran=000000111607 tim=120 nst=1000 nmt=4000 nit=500 nco=4 ist=0 ipr=0
 iso=0 nod=9 sfa=1.1e+08 igo=4 inb=0 ine=0 mfu=3 isp=0 ipf=0 isd=4
 nda=1000  end
 soe 0.259 0.459 0.108 0.042 0.045 0.049 0.038 0 0 0 0 0 0 0 0 0 0 0 0 0
 0 0 0 0 0 0 0 0 end
 det 45.36 0 211.76 55.36 0 211.76 65.36 0 211.76 75.36 0 211.76 85.36
 0 211.76 95.36 0 211.76 105.36 0 211.76 115.36 0 211.76 125.36 0
 211.76 end
 sdl 111.76 211.76 311.76 411.76 end
 sdr 80 90 0 150 80 90 80 90 end
 sds 0 0 15 36 0 0 0 0 end
 sxy 3 84.36 86.36 -1 1 95.79 97.79 86.36 97.79 99.06 111.76   end
gend
10-160b pt hac
 0 0 0 0
 sph 85.36 0 96.79 1
 rcc 0 0 -97.79 0 0 195.58 86.36
 rcc 0 0 -98.79 0 0 197.58 89.218
 rcc 0 0 -97.79 0 0 195.53 93.98
 rcc 0 0 -111.76 0 0 223.52 99.06
 sph 0 0 0 400
 sph 0 0 0 500
 rcc 0 0 -97.79 0 0 195.58 93.98
 rcc 0 0 -211.76 0 0 423.52 199.06
  end
 src +1
 cav +2 -1
 inn +3 -2
 shd +4 -3
 our +5 -8
 inv +6 -9
 exv +7 -6
 slp +8 -3 -4
 det +9 -5
  end
 1 1 1 1 1 1 1 1 1
 0 0 0 0 0 0 0 0 0
 3 4 1 2 1 1000 0 4 4
 0
 end
```

5.7.6. 10-160b-pt-n-axial-igo0.inp

```
'Input generated by Espn 89 Compiled on 06-07-2002
=sas4     parm=size=500000
10-160B pt
27n-18couple  infhommedium
 carbonsteel 1 1 293 end
 lead 2 1 293 end
 beryllium 3 1 293 end
 arbm-air 0.0002 2 0 0 0 7014 82 8016 18 4 1 293 end
end comp
 idr=1 ity=1 izm=3 isn=8 irf=9029 ifs=1 mhw=4 frd=1 szf=1  end
 1 97.78 111.76   end
 3 4 1   end
xend
 ran=000000091807 tim=120 nst=1000 nmt=4000 nit=500 nco=4 ist=0 ipr=0
 iso=0 nod=0 sfa=1.1e+08 igo=0 inb=0 ine=0 mfu=3 isp=0 ipf=0 isd=4
 nda=1000  end
 soe 26 46 11 4 5 5 4 0 0 0 0 0 0 0 0 0 0 0 0 0 0 0 0 0 0 0 0 end
 sdr 0 100 0 100 0 10 0 10 end
 sds 10 0 10 0 1 0 1 0 end
gend
point source
 fue 1 97.78 end
fend
 inn 1 89.218 98.79 end
 rs1 2 93.98 97.79 end
 our 1 99.06 111.76 end
 as1 1 89.218 99.79 end
 hol 1 end
 cav 4 86.36 97.79 end
cend
end
```

5.7.7. 10-160b-pt-n-HAC.inp

```
'Input generated by Espn 89 Compiled on 06-07-2002
=sas4     parm=size=500000
10-160B pt neutron
27n-18couple  infhommedium
 carbonsteel 1 1 293 end
 lead 2 1 293 end
 beryllium 3 1 293 end
 arbm-air 0.0002 2 0 0 0 7014 82 8016 18 4 1 293 end
 cobalt 5 1 293 end
end comp
 idr=0 ity=1 izm=5 isn=8 irf=9029 ifs=1 mhw=3 frd=86.36 szf=1  end
 86.36 89.218 93.98 99.06 199.06   end
 4 1 2 1 4   end
xend
 ran=000000091807 tim=120 nst=1000 nmt=4000 nit=1000 nco=4 ist=0 ipr=0
 iso=0 nod=10 sfa=1.1e+08 igo=4 inb=0 ine=0 mfu=3 isp=0 ipf=0 isd=4
 nda=1000  end
 soe 0.259 0.459 0.108 0.042 0.045 0.049 0.038 0 0 0 0 0 0 0 0 0 0 0 0
 0 0 0 0 0 0 0 0 end
 det 199.06 0 57.79 199.06 0 67.79 199.06 0 77.79 199.06 0 87.79 199.06
 0 97.79 199.06 0 107.79 199.06 0 117.79 199.06 0 127.79 199.06 0
 137.79 199.06 0 147.79 end
 sdl 99.06 199.06 322 344 end
 sdr 70 120 0 140 80 100 80 100 end
 sds 10 0 14 36 10 0 10 0 end
```

```
 sxy 3 84.36 86.36 -1 1 95.79 97.79 86.36 97.79 99.06 111.76   end
gend
10-160b pt hac
 0 0 0 0
 sph 85.36 0 96.79 1
 rcc 0 0 -97.79 0 0 195.58 86.36
 rcc 0 0 -98.79 0 0 197.58 89.218
 rcc 0 0 -97.79 0 0 195.53 93.98
 rcc 0 0 -111.76 0 0 223.52 99.06
 sph 0 0 0 400
 sph 0 0 0 500
 rcc 0 0 -97.79 0 0 195.58 93.98
 rcc 0 0 -211.76 0 0 423.52 199.06
  end
 src +1
 cav +2 -1
 inn +3 -2
 shd +4 -3
 our +5 -8
 inv +6 -9
 exv +7 -6
 slp +8 -3 -4
 det +9 -5
  end
 1 1 1 1 1 1 1 1 1
 0 0 0 0 0 0 0 0 0
 3 4 1 2 1 1000 0 4 4
 0

end
```

5.7.8. 10-160b-pt-n-igo0.inp

```
'Input generated by Espn 89 Compiled on 06-07-2002
=sas4     parm=size=500000
10-160B pt
27n-18couple  infhommedium
 carbonsteel 1 1 293 end
 lead 2 1 293 end
 beryllium 3 1 293 end
 arbm-air 0.0002 2 0 0 0 7014 82 8016 18 4 1 293 end
 cobalt 5 1 293 end
end comp
 idr=0 ity=1 izm=5 isn=8 irf=9029 ifs=1 mhw=4 frd=1 szf=1  end
 1 86.36 89.218 93.98 99.06   end
 3 4 1 2 1   end
xend
 ran=000000111307 tim=120 nst=1000 nmt=4000 nit=100 nco=4 ist=0 ipr=0
 iso=0 nod=0 sfa=1.1e+08 igo=0 inb=0 ine=0 mfu=3 isp=0 ipf=0 isd=4
 nda=1000  end
 soe 26 46 11 4 5 5 4 0 0 0 0 0 0 0 0 0 0 0 0 0 0 0 0 0 0 0 0 end
 sdl 99.06 199.06 322 344 end
 sdr 0 20 0 100 0 100 0 10 end
 sds 5 1 10 1 10 1 1 1 end
gend
point source
 fue 1 97.78 end
fend
 inn 1 89.218 98.79 end
 rs1 2 93.98 97.79 end
 our 1 99.06 111.76 end
 as1 1 89.218 99.79 end
```

```
 hol 1 end
 cav 4 86.36 97.79 end
cend
end
```

6.0 CRITICALITY EVALUATION

6.1 DESCRIPTION OF CRITICALITY DESIGN

This criticality safety evaluation supports shipment of up to ten TRU waste drums per 10-160B Cask. This criticality safety evaluation establishes a general payload for the 10-160B Cask. The maximum fissile mass limit for the 10-160B Cask is 325 fissile-gram-equivalent (FGE). The waste drums will be filled with manually compacted waste (i.e., not machine compacted) containing a maximum of 1% by weight of special reflectors.

6.1.1 Design Features

The Model CNS 10-160B packaging consists of a lead and steel containment vessel which provides the necessary shielding for the various radioactive payloads. (Refer to Section 1.2.3 for packaging contents.) Tests and analysis performed and documented within chapters 2.0 and 3.0 have demonstrated the ability of the containment vessel to maintain its shielding integrity under normal conditions of transport.

The cask side wall consists of an outer 2-inch thick steel shell surrounding 1 7/8 inches of lead and an inner containment shell wall of 1 1/8-inch thick steel.

The primary cask lid consists of two steel layers with a total thickness of 5½ inches. The lid closure is made in a stepped configuration to eliminate radiation streaming at the lid/cask body interface. A secondary lid is located at the center of the main lid, covering a 31-inch opening. The secondary lid is constructed of steel plates with a total thickness of 5½ inches with multiple steps machined in its periphery. These steps match those in the primary lid, eliminating radiation streaming pathways.

Figures 6-1 and 6-2 present representative views of a single 10-160B Cask with ten 55-gallon drums for a normal as-loaded configuration.

6.1.2 Summary Table of Criticality Evaluation

Table 6.1 summarizes the results of the criticality evaluation for single packages and arrays of packages for the conditions defined in 10 CFR 71.55 and 71.59. These results indicate that the 10-160B Cask with any of the payloads described in Section 6.2 remains safely subcritical under NCT and HAC even with the extremely conservative assumptions used in the analysis.

6.1.3 Criticality Safety Index

As shown in Table 6.1, the maximum calculated k_{eff} value is 0.93873 (Case f022flat02) for an infinite array of fully flooded 10-160B Casks containing an optimally moderated sphere with 325 g of Pu-239. This is below the k_{eff} limit of 0.94 after allowing for bias and uncertainties. Because an infinite array of casks is safely subcritical, Nequals infinity and the CSI is zero.

Table 1. Summary of Criticality Safety Evaluation Results.

Single Package Results [10 CFR 71.55(b), (d), (e)]	
Package calculated to be subcritical under conditions for maximum reactivity	Maximum k_{eff}[a] = 0.93252, σ = 0.00020 (case f033)
Most reactive configuration	Compact sphere containing 325 g of Pu^{239} homogenized with 25% by volume of CH_2 and 1% by weight of Be based on CH_2 and Pu^{239} with the remaining volume filled with H_2O
Moderation for most reactive configuration	Cask flooded
Reflection for most reactive configuration (package materials and/or 30 cm water)	30 cm water around the cask
Array Results	
NCT array [10 CFR 71.59(a)(1)]	Maximum k_{eff}[a] = 0.45328, σ = 0.00015 (case f369a)
Number of packages	Analyzed: infinite array (CSI = 0)
Most reactive fissile content	Compact sphere containing 325 g of Pu^{239} homogenized with 25% by volume of CH_2 and 1% by weight of Be based on CH_2 and Pu^{239}
Interstitial moderation	No interstitial moderation
Reflection surrounding array	No reflector since infinite array
HAC array [10 CFR 71.59(a)(2)]	Maximum k_{eff}[a] =0.93873, σ = 0.00020 (case f022flat02)
Number of packages	Analyzed: infinite array (CSI = 0)
Most reactive fissile content:	Compact sphere containing 325 g of Pu^{239} homogenized with 25% by volume of CH_2 and 1% by weight of Be based on CH_2 and Pu^{239} with the remaining volume filled with H_2O
Interstitial moderation	0.001 g/cm^3 water interstitial moderation
Reflection surrounding array	No reflector since infinite array

[a] The effective criticality limit for this evaluation is $k_{eff} < 0.94$ which accounts for bias and uncertainties (see Section 6.8).

6.2 FISSILE MATERIAL CONTENTS

The 10-160B payload is conservatively assumed to contain 325 g of pure Pu^{239}. The quantities of all fissile isotopes other than Pu^{239} present in the RH-TRU waste matrix may be converted to a FGE using the conversion factors outlined in the *Remote-Handling Transuranic Waste Authorization Methods for Payload Control* (RH-TRAMPAC) (Reference 6). In addition, the Pu^{239} is conservatively assumed to be contained within a sphere moderated and reflected by

polyethylene (CH_2) with the total CH_2 comprising up to a maximum of 25% by volume of the 550 gallons. Beryllium is added as a special reflector/moderator with the total beryllium comprising up to a maximum of 1% by weight of the total masses of CH_2 and Pu^{239}.

The use of polyethylene as the bounding hydrogenous moderating material is justified by the SAIC-1322-001 (Reference 7) study which concludes that polyethylene is the most reactive moderator that could credibly moderate the transuranic waste in a pure form. A 25% volumetric packing fraction for polyethylene is used as a conservative value which is based on physical testing that bounds the packing fraction of polyethylene in manually compacted TRU waste of 13.36% (Reference 8).

This evaluation also addresses the addition of special reflectors in the waste matrix. Materials that can credibly provide better than 25% polyethylene/75% water equivalent reflection are termed "special reflectors" and are not authorized for shipment in quantities that exceed 1% by weight. Based on the studies of reflector material documented in SAIC-1322-001 (Reference 7), Be, BeO, C, D2O, MgO, and depleted uranium (less than 0.72 wt% and greater than or equal to 0.3 wt% 235U) are the only materials considered special reflectors. SAIC-1322-001 found that beryllium is the bounding special reflector as it provides the best reflection of the system and results in the highest k_{eff}.

For the NCT cases, the total amount of CH_2 is based on 25% by volume of 10 drums. The total amount of beryllium is based upon 1% by weight of the total mass of the CH_2 and the Pu^{239} in the 10 drums. The NCT configurations are assumed to not contain water. Therefore, the remaining volume not filled with polyethylene, Pu^{239} and beryllium is considered to be void. Densities are based upon smearing the materials with the void in the fissile sphere and the reflector.
For the NCT cases, the fissile sphere contains 325 g Pu^{239} uniformly distributed with 25% by volume of CH_2. Beryllium, added to the fissile sphere as a special reflector/moderator, is uniformly distributed throughout the sphere in the amount of 1% by mass of the total CH_2 and Pu^{239} mass. H/Pu ratios are postulated which determine the masses of CH_2 and beryllium in the fissile sphere for a given H/Pu ratio. The volume of the sphere is dependent upon the sum of the Pu^{239}, beryllium, polyethylene and void volumes. The various NCT fissile sphere compositions, densities and associated radii are presented in Table 6.2.
The remaining CH_2 (at 25% density) and beryllium not used in the fissile sphere are assumed to comprise a reflector completely surrounding the fissile sphere. The beryllium is uniformly distributed throughout the reflector volume in the amount of 1% by mass of the CH_2 mass. For the fissile sphere positioned in the centroid of the cask cavity, the reflector is a sphere. For the fissile sphere on the center floor or corner floor, the reflector occupies the same volume as the sphere but cylindrical in shape filling the lower portion of the cask. The reflector compositions are presented in Table 6.2 and representative views of the various NCT configurations are shown in Figures 6-3 through 6-5.
For the HAC cases, the total amount of CH_2 is based upon a maximum of 25% by volume of 10 drums. The total amount of beryllium is based upon a maximum of 1% by weight of the total mass of the CH_2 and the Pu^{239} in the 10 drums. The HAC configurations are assumed to contain water as required by 10 CFR 71.55(b). Therefore, any remaining volume not filled with

polyethylene, Pu^{239} and beryllium is considered to be filled with water. Densities are based upon smearing the materials with the water in the fissile sphere and the reflector.
For the HAC cases, the fissile sphere is comprised of 325 g Pu^{239} uniformly distributed with the appropriate amounts of CH_2 and beryllium (as a special reflector/moderator) for the particular configuration. The remaining volume in the fissile sphere is filled with water. H/Pu ratios are postulated which determine the masses of CH_2 and beryllium in the fissile sphere for a given H/Pu ratio. The volume of the sphere is dependent upon the sum of the Pu^{239}, beryllium, polyethylene and water volumes. The various HAC fissile sphere compositions and associated radii are presented in Table 6.3. Modifications of certain compositions were made to examine the effect of less beryllium (0% and 0.5% by mass of total CH_2 and Pu^{239} mass) and by less polyethylene (20% by volume of the 10 drums). Representative views of the various HAC configurations are shown in Figures 6-6 through 6-9.
The HAC reflector contains the remaining CH_2 homogenized with sufficient H_2O to fill the remaining cask cavity volume. Beryllium is added to the reflector as a special reflector and is uniformly distributed throughout the volume in the amount of 1% by mass of the CH_2 mass. The fissile sphere is located in the cask centroid, on the center floor, corner floor or corner ceiling. The reflector compositions are presented in Table 6.3. Modifications of certain compositions were made to examine the effect of less beryllium (0% and 0.5% by mass of total CH_2 mass) and by less polyethylene (20% by volume of the 10 drums).

6.3 GENERAL CONSIDERATIONS

6.3.1 Model Configuration

Section 6.2 describes the fissile and reflector materials used in the criticality models.

Figures 6-1 and 6-2 present representative views of the normal condition 10-160B Cask with 10 drums. The radial and axial zone dimensions are shown in Table 6-4. The criticality model was developed using these dimensions and is essentially the same as the actual cask except that some details such as drain ports, lifting holes, and leak test ports are not included. The thermal barrier and impact limiter are also not included. These modeling simplifications will have a negligible impact on the criticality calculations and do not change the conclusions of the evaluation. A 12 inch water reflector region surrounds the cask.

The following additional assumptions are made in this evaluation.

1. The 10-160B is assumed to maintain its integrity under accident conditions; therefore, the cask model is based on nominal design dimensions and the payload is assumed to remain in the cask cavity under normal and accident conditions.

2. The fissile material is conservatively modeled as Pu^{239} with no credit taken for any neutron poisons that may be present such as Pu^{240} or Pu^{242}, the drums, or internal support structures.

3. The moderating material is assumed to be bounded with polyethelene at a volume fraction of 25% of the total volume of waste (i.e., 25% of 550 gallons).

4. The maximum special reflecting material (beryllium) is 1% by weight in 550 gallons total volume of waste, i.e., 1% by weight of total mass of polyethelene and mass of plutonium.

5. Worse case NCT geometry is a sphere of fissile material. All plutonium is uniformly distributed within the sphere, as well as the polyethelene at a volume fraction of 25%. The beryllium is uniformly distributed within the sphere at 1% by weight of the total plutonium and polyethelene mass.

6. Worse case NCT reflector geometry contains the remaining polyethelene and beryllium. The reflector geometry is either a sphere surrounding the fissile material or a cylinder filling the bottom of the cask. In all cases, the polyethelene is at a packing fraction of 25% and the beryllium is uniformly distributed.

7. Worse case HAC geometry is a sphere of fissile material. All plutonium is uniformly distributed within the sphere, as well as the polyethelene (25%). The beryllium is uniformly distributed within the sphere at 1% by weight of the total plutonium and polyethelene mass. Water fills the remaining voids not filled by other materials.

Table2. NCT Fissile Sphere and Reflector Compositions.

NCT Fissile Plus Moderator - 25% CH_2 Volume Fraction[b] - 1% Be Weight Fraction[c]										
Material Identifier	H/Pu	Sphere Radius (cm)	Sphere Density (g/cm^3)	Mass Fractions[a]						
				Hydrogen		Beryllium	Carbon	Oxygen		Plutonium
				H^1	H^2	Be^9	C	O^{16}	O^{17}	Pu^{239}
m130	700	19.04676	0.244252	0.13564500	0.00004067	0.00990099	0.80844128	N/A	N/A	0.04597206
m131	800	19.913170	0.242853	0.13643688	0.00004091	0.00990099	0.81316084	N/A	N/A	0.04046038
m132	850	20.31945	0.242277	0.13676564	0.00004100	0.00990099	0.81512025	N/A	N/A	0.03817212
m133	900	20.71011	0.241765	0.13705920	0.00004109	0.00990099	0.81686988	N/A	N/A	0.03612883
m134	950	21.08656	0.241307	0.13732294	0.00004117	0.00990099	0.81844173	N/A	N/A	0.03429317
m135	1000	21.45002	0.240895	0.13756117	0.00004124	0.00990099	0.81986157	N/A	N/A	0.03263503
m136	1100	22.14214	0.240183	0.13797461	0.00004137	0.00990099	0.82232566	N/A	N/A	0.02975738
m137	1200	22.79349	0.239589	0.13832104	0.00004147	0.00990099	0.82439041	N/A	N/A	0.02734609
m138	1300	23.40961	0.239087	0.13861554	0.00004156	0.00990099	0.82614562	N/A	N/A	0.02529629
m139	1400	23.99489	0.238656	0.13886897	0.00004163	0.00990099	0.82765605	N/A	N/A	0.02353235
m140	1500	24.55294	0.238283	0.13908936	0.00004170	0.00990099	0.82896956	N/A	N/A	0.02199839
m141	1600	25.08671	0.237957	0.13928277	0.00004176	0.00990099	0.83012231	N/A	N/A	0.02065217
m142	1700	25.59869	0.237669	0.13945388	0.00004181	0.00990099	0.83114211	N/A	N/A	0.01946121
m143	1800	26.09097	0.237412	0.13960633	0.00004186	0.00990099	0.83205070	N/A	N/A	0.01840013

NCT Reflector - 25% CH_2 Volume Fraction[b] - 1% Be Weight Fraction[c]										
Material Identifier	H/Pu	Sphere Radius (cm)	Reflector Density (g/cm^3)	Mass Fractions[a]						
				Hydrogen		Beryllium	Carbon	Oxygen		Plutonium
				H^1	H^2	Be^9	C	O^{16}	O^{17}	Pu^{239}
m160	N/A	79.21023	0.233058	0.142249921	4.26486E-05	0.00990099	0.847806441	N/A	N/A	N/A
m161	N/A	79.21023	0.233058	0.142249921	4.26486E-05	0.00990099	0.847806441	N/A	N/A	N/A
m162	N/A	79.21023	0.233058	0.142249921	4.26486E-05	0.00990099	0.847806441	N/A	N/A	N/A
m163	N/A	79.21023	0.233058	0.142249921	4.26486E-05	0.00990099	0.847806441	N/A	N/A	N/A
m164	N/A	79.21023	0.233058	0.142249921	4.26486E-05	0.00990099	0.847806441	N/A	N/A	N/A
m165	N/A	79.21023	0.233058	0.142249921	4.26486E-05	0.00990099	0.847806441	N/A	N/A	N/A
m166	N/A	79.21023	0.233058	0.142249921	4.26486E-05	0.00990099	0.847806441	N/A	N/A	N/A
m167	N/A	79.21023	0.233058	0.142249921	4.26486E-05	0.00990099	0.847806441	N/A	N/A	N/A
m168	N/A	79.21023	0.233058	0.142249921	4.26486E-05	0.00990099	0.847806441	N/A	N/A	N/A
m169	N/A	79.21023	0.233058	0.142249921	4.26486E-05	0.00990099	0.847806441	N/A	N/A	N/A
m170	N/A	79.21023	0.233058	0.142249921	4.26486E-05	0.00990099	0.847806441	N/A	N/A	N/A
m171	N/A	79.21023	0.233058	0.142249921	4.26486E-05	0.00990099	0.847806441	N/A	N/A	N/A
m172	N/A	79.21023	0.233058	0.142249921	4.26486E-05	0.00990099	0.847806441	N/A	N/A	N/A
m173	N/A	79.21023	0.233058	0.142249921	4.26486E-05	0.00990099	0.847806441	N/A	N/A	N/A

[a] Values derived assuming 19.7 g/cm^3 for Pu, 1.85 g/cm^3 for Be, 0.923 g/cm^3 for CH_2, and 1.0 g/cm^3 for H_2O.

[b] CH_2 volume fractions based on ten 55 gallon drums

[c] Be weight fraction based upon mass of CH_2 and Pu (fissile region only)

Table 3. HAC Fissile Sphere and Reflector Compositions.

HAC Fissile Plus Moderator												
Material Identifier	H/Pu	CH_2[b] Volume Fraction	Be[c] Weight Fraction	Sphere Radius (cm)	Sphere Density (g/cm^3)	Mass Fractions[a]						
						Hydrogen		Beryllium	Carbon	Oxygen		Plutonium
						H^1	H^2	Be^9	C	O^{16}	O^{17}	Pu^{239}
m100	700	25%	1.0%	12.519999	1.019560	0.11441390	0.00003430	0.00264597	0.19336657	0.65049999	0.00026274	0.03877653
m101	800	25%	1.0%	13.088647	1.014851	0.11497677	0.00003447	0.00261028	0.19431786	0.65370021	0.00026404	0.03409638
m102	850	25%	1.0%	13.355327	1.012911	0.11521015	0.00003454	0.00259548	0.19471229	0.65502711	0.00026457	0.03215585
		25%	0.5%	13.352284	1.012326	0.11535548	0.00003459	0.00129870	0.19484164	0.65600821	0.00026497	0.03219641
		25%	0.0%	13.349243	1.011742	0.11550103	0.00003463	0.00000000	0.19497120	0.65699073	0.00026537	0.03223704
		20%	1.0%	13.393913	1.016274	0.11383931	0.00003413	0.00213088	0.15525677	0.69668428	0.00028140	0.03177324
m103	900	25%	1.0%	13.611761	1.011186	0.11541840	0.00003460	0.00258227	0.19506425	0.65621111	0.00026505	0.03042431
		25%	0.5%	13.608682	1.010604	0.11556323	0.00003465	0.00129208	0.19519253	0.65718959	0.00026545	0.03046248
		25%	0.0%	13.605605	1.010023	0.11570826	0.00003469	0.00000000	0.19532101	0.65816948	0.00026584	0.03050072
		20%	1.0%	13.651092	1.014565	0.11404263	0.00003419	0.00211700	0.15553406	0.69792857	0.00028190	0.03006165
m104	950	25%	1.0%	13.858882	1.009642	0.11560537	0.00003466	0.00257042	0.19538023	0.65727412	0.00026548	0.02886972
		25%	0.5%	13.855767	1.009063	0.11574973	0.00003470	0.00128613	0.19550755	0.65825023	0.00026587	0.02890577
		25%	0.0%	13.852654	1.008484	0.11589430	0.00003475	0.00000000	0.19563507	0.65922774	0.00026627	0.02894188
		20%	1.0%	13.898930	1.013035	0.11422516	0.00003425	0.00210454	0.15578300	0.69904565	0.00028235	0.02852505
m105	1000	25%	1.0%	14.097490	1.008253	0.11577416	0.00003471	0.00255972	0.19566550	0.65823377	0.00026587	0.02746628
		25%	0.5%	14.094340	1.007676	0.11591811	0.00003475	0.00128077	0.19579194	0.65920774	0.00026626	0.02750043
		25%	0.0%	14.091191	1.007100	0.11606226	0.00003480	0.00000000	0.19591858	0.66018308	0.00026665	0.02753463
		20%	1.0%	14.138232	1.011657	0.11438994	0.00003430	0.00209329	0.15600773	0.70005409	0.00028276	0.02713789
m106	1100	25%	1.0%	14.551873	1.005852	0.11606687	0.00003480	0.00254115	0.19616020	0.65989797	0.00026654	0.02503247

HAC Reflector												
Material Identifier	H/Pu	CH_2[b] Volume Fraction	Be[c] Weight Fraction	Sphere Radius (cm)	Reflector Density (g/cm^3)	Mass Fractions[a]						
						Hydrogen		Beryllium	Carbon	Oxygen		Plutonium
						H^1	H^2	Be^9	C	O^{16}	O^{17}	Pu^{239}
m150	N/A	25%	1.0%	N/A	0.991734	0.11510979	0.00003451	0.00105738	0.09054180	0.79293624	0.00032027	N/A
m151	N/A	25%	1.0%	N/A	0.991737	0.11510879	0.00003451	0.00105705	0.09051365	0.79296572	0.00032029	N/A
m152	N/A	25%	1.0%	N/A	0.991738	0.11510828	0.00003451	0.00105689	0.09049956	0.79298046	0.00032029	N/A
		25%	0.5%	N/A	0.991497	0.11516820	0.00003453	0.00052857	0.09052169	0.79342654	0.00032047	N/A
		25%	0.0%	N/A	0.991256	0.11522815	0.00003455	0.00000000	0.09054382	0.79387283	0.00032065	N/A
		20%	1.0%	N/A	0.993391	0.11445521	0.00003432	0.00084408	0.07227755	0.81206084	0.00032800	N/A
m153	N/A	25%	1.0%	N/A	0.991739	0.11510778	0.00003451	0.00105672	0.09048548	0.79299521	0.00032030	N/A
		25%	0.5%	N/A	0.991498	0.11516769	0.00003453	0.00052849	0.09050760	0.79344121	0.00032048	N/A
		25%	0.0%	N/A	0.991257	0.11522763	0.00003455	0.00000000	0.09052974	0.79388743	0.00032066	N/A
		20%	1.0%	N/A	0.993392	0.11445480	0.00003432	0.00084395	0.07226622	0.81207270	0.00032800	N/A
m154	N/A	25%	1.0%	N/A	0.991740	0.11510727	0.00003451	0.00105656	0.09047139	0.79300997	0.00032030	N/A
		25%	0.5%	N/A	0.991500	0.11516717	0.00003453	0.00052841	0.09049351	0.79345589	0.00032048	N/A
		25%	0.0%	N/A	0.991259	0.11522711	0.00003455	0.00000000	0.09051565	0.79390203	0.00032066	N/A
		20%	1.0%	N/A	0.993393	0.11445440	0.00003432	0.00084382	0.07225489	0.81208457	0.00032801	N/A
m155	N/A	25%	1.0%	N/A	0.991742	0.11510677	0.00003451	0.00105639	0.09045730	0.79302472	0.00032031	N/A
		25%	0.5%	N/A	0.991501	0.11516666	0.00003453	0.00052833	0.09047942	0.79347057	0.00032049	N/A
		25%	0.0%	N/A	0.991260	0.11522658	0.00003455	0.00000000	0.09050156	0.79391664	0.00032067	N/A
		20%	1.0%	N/A	0.993394	0.11445399	0.00003431	0.00084369	0.07224356	0.81209644	0.00032801	N/A
m156	N/A	25%	1.0%	N/A	0.991744	0.11510576	0.00003451	0.00105606	0.09042910	0.79305425	0.00032032	N/A

[a] Values derived assuming 19.7 g/cm^3 for Pu, 1.85 g/cm^3 for Be, 0.923 g/cm^3 for CH_2, and 1.0 g/cm^3 for H_2O.

[b] CH_2 volume fractions based on ten 55 gallon drums

[c] Be weight fraction based upon mass of CH_2 and Pu (fissile region only)

8. Worse case HAC reflector geometry contains the remaining polyethelene and beryllium (1% by weight of the polyethelene) surrounding the fissile sphere. In addition, water is used to fill the space not filled by the polyethelene and beryllium. All three components (i.e., water, polyethylene and beryllium) are homogenously mixed and uniformly distributed throughout the remaining cask volume.

9. The criticality analyses were performed for fully reflected external conditions. Therefore, a 30.48 cm (12-in.) water reflector completely surrounding the cask is used in all single cask calculations for normal and accident conditions. This configuration is consistent with the requirements of 10 CFR 71.55(b)(3), which require full reflection, and a U.S. Nuclear Regulatory Commission recommendation that the thickness of the water reflector be at least 30 cm.

The previous paragraphs describe the assumptions used to analyze the 10-160B Cask. These assumptions provide the following conservative attributes, as required by 10 CFR 71.55.

1. Spherical fissile geometry for maximum reactivity
2. Optimum moderation, including special reflecting material (i.e., beryllium)
3. Full reflection
4. No credit for drums and internal drum support structure
5. Flooded for HAC

Figure 6-1. Representative Elevation View of a Single 10-160B Cask
With Ten 55-gal Drums in the Cask Cavity (Normal (As-Loaded) Configuration).

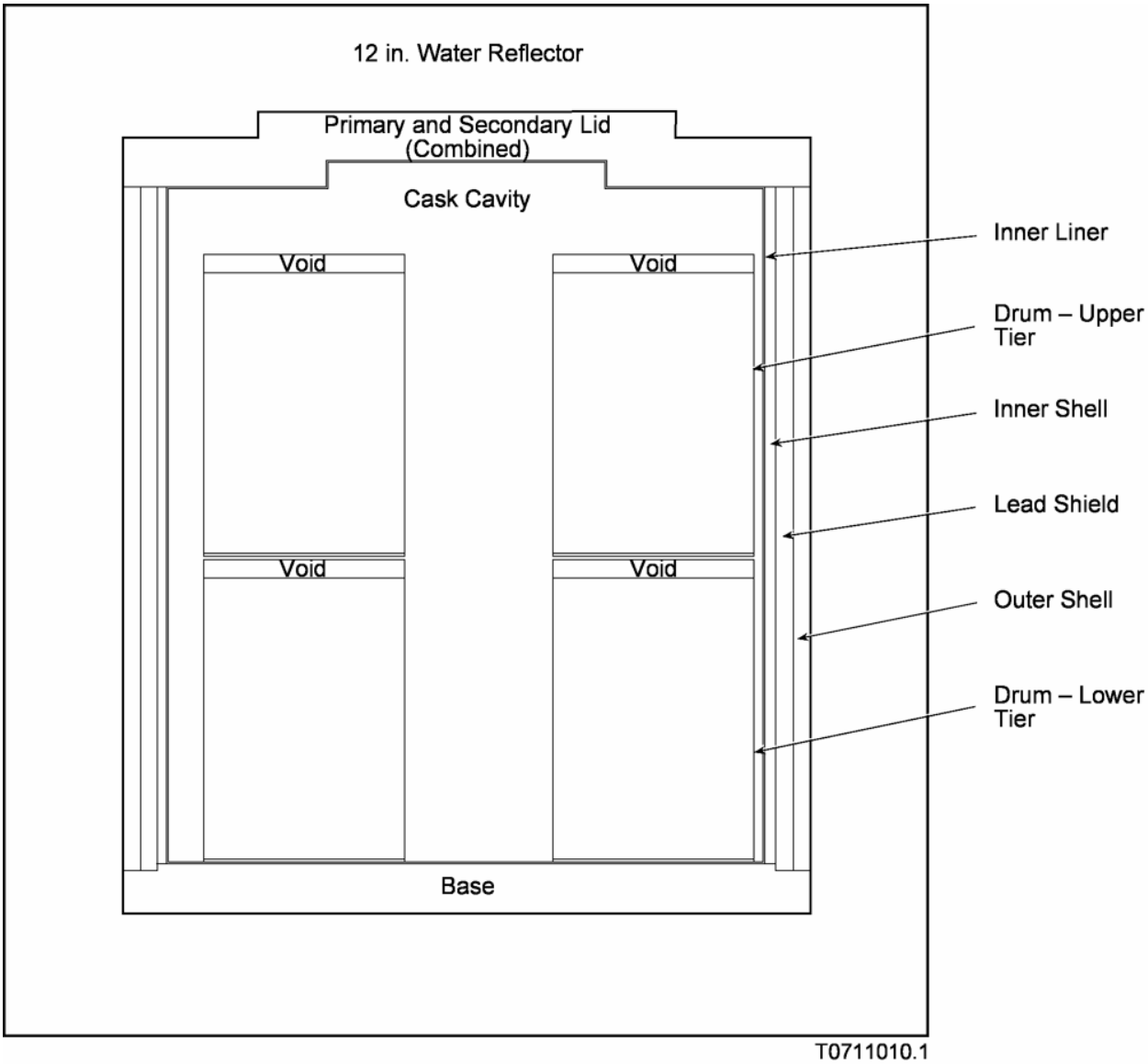

Figure 6-2. Representative Plan View of a Single 10-160B Cask
With Ten 55-gal Drums in the Cask Cavity (Normal (As-Loaded) Configuration).

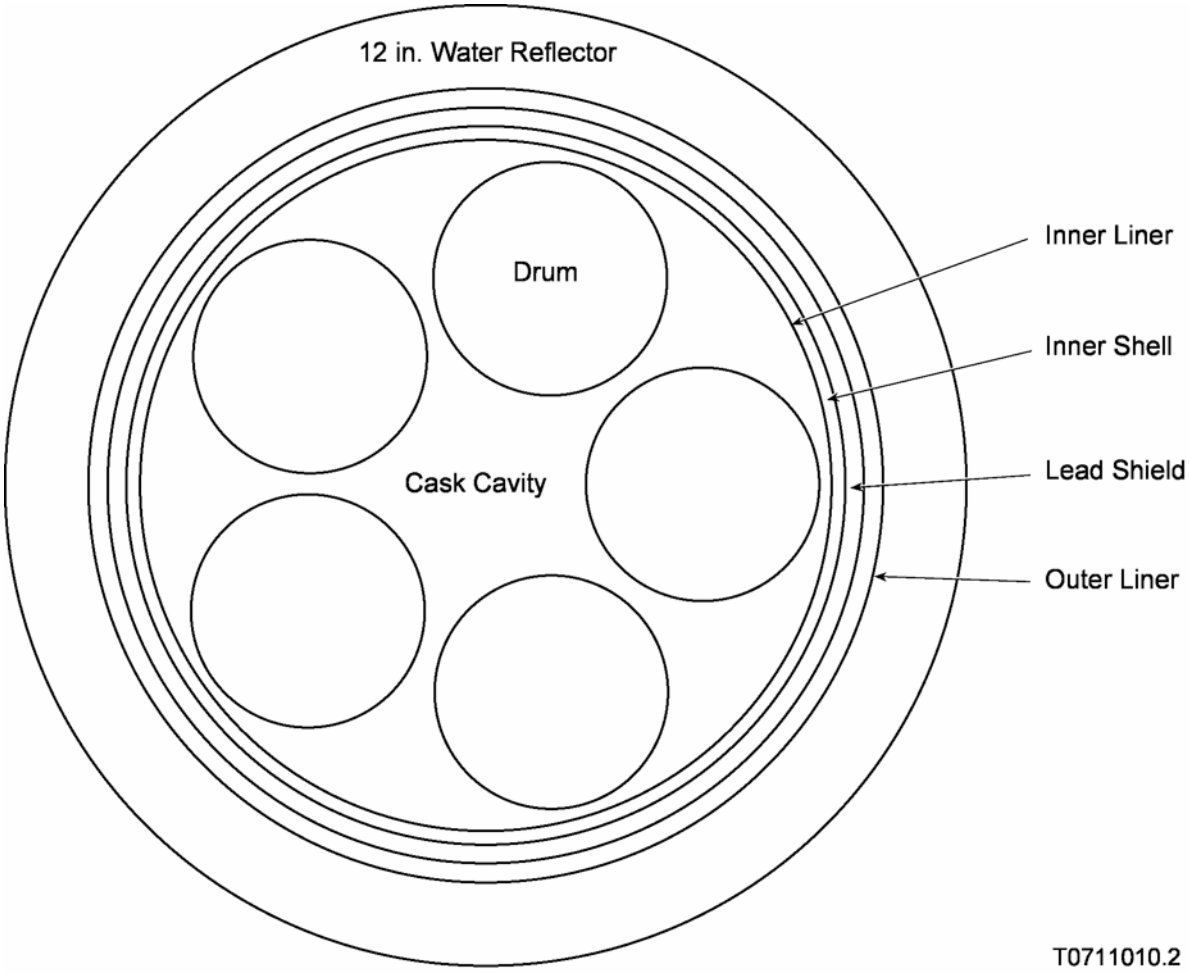

Figure 6-3. Elevation View of a Single 10-160B Cask with the Fissile and Reflector Regions for the NCT Centroid Case (Case f309).

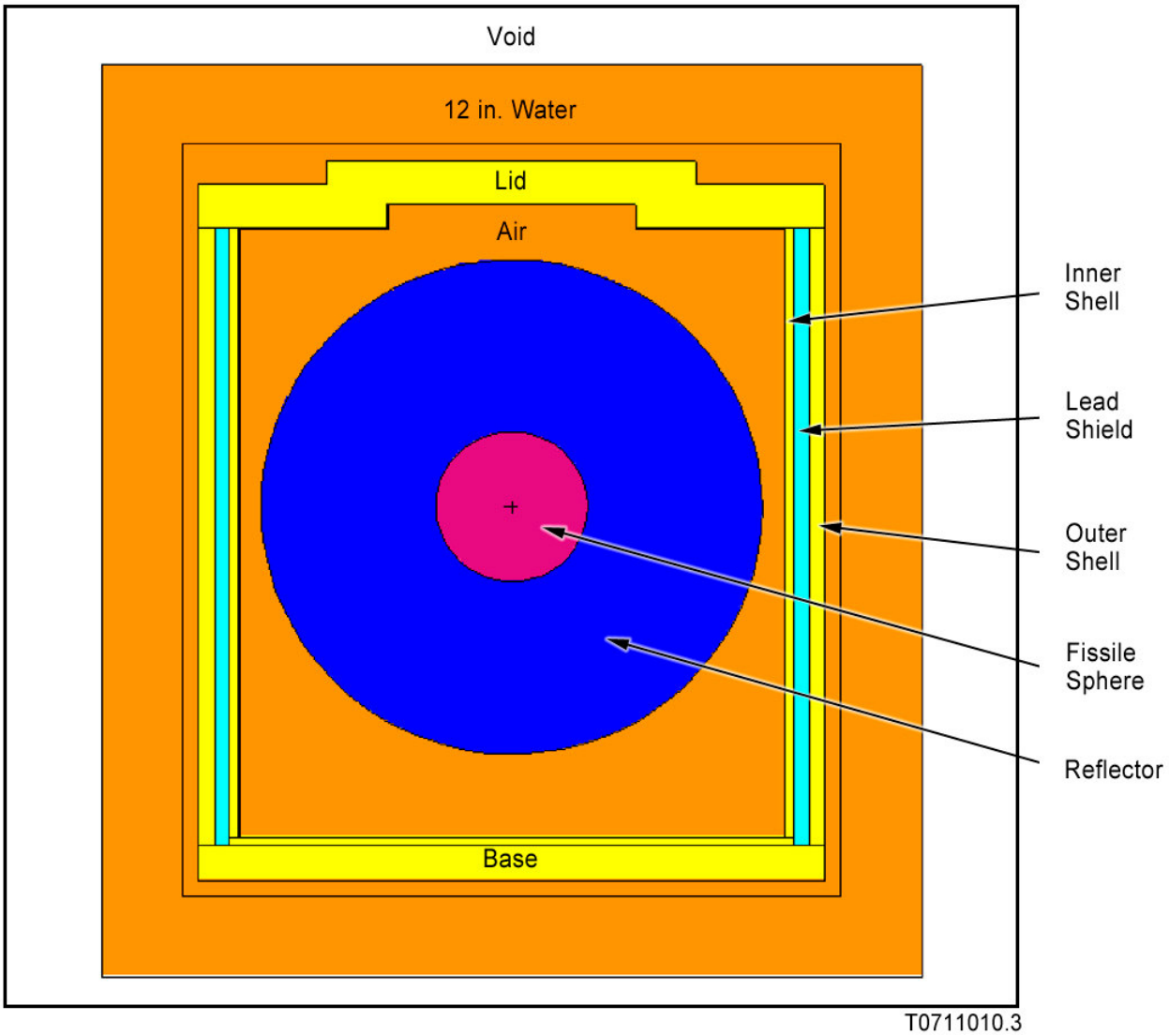

Figure 6-4. Elevation View of a Single 10-160B Cask with the Fissile and Reflector Regions for the NCT Base Center Case (Case f329).

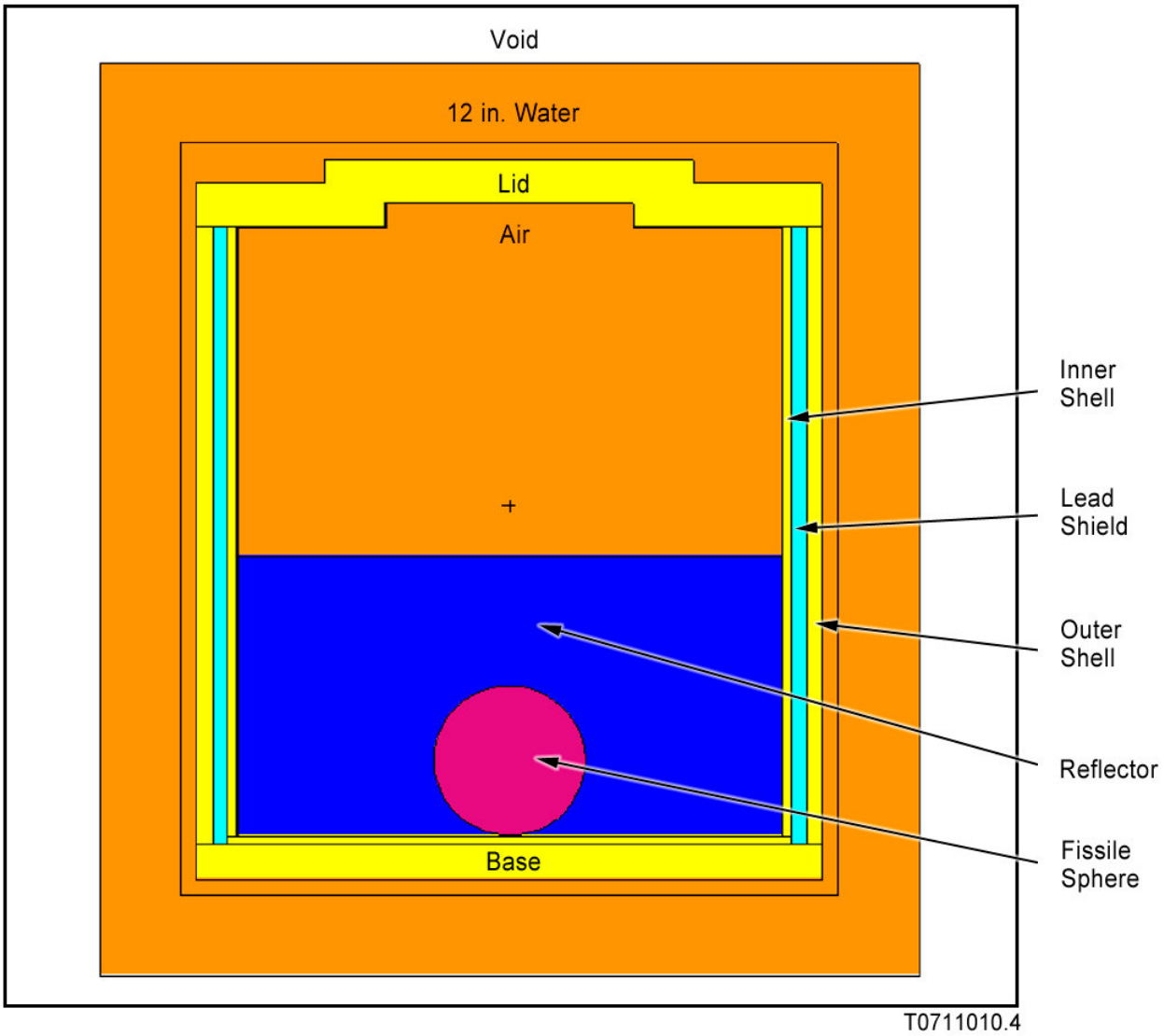

Figure 6-5. Elevation View of a Single 10-160B Cask with the Fissile and Reflector Regions for the NCT Base Corner Case (Case f349).

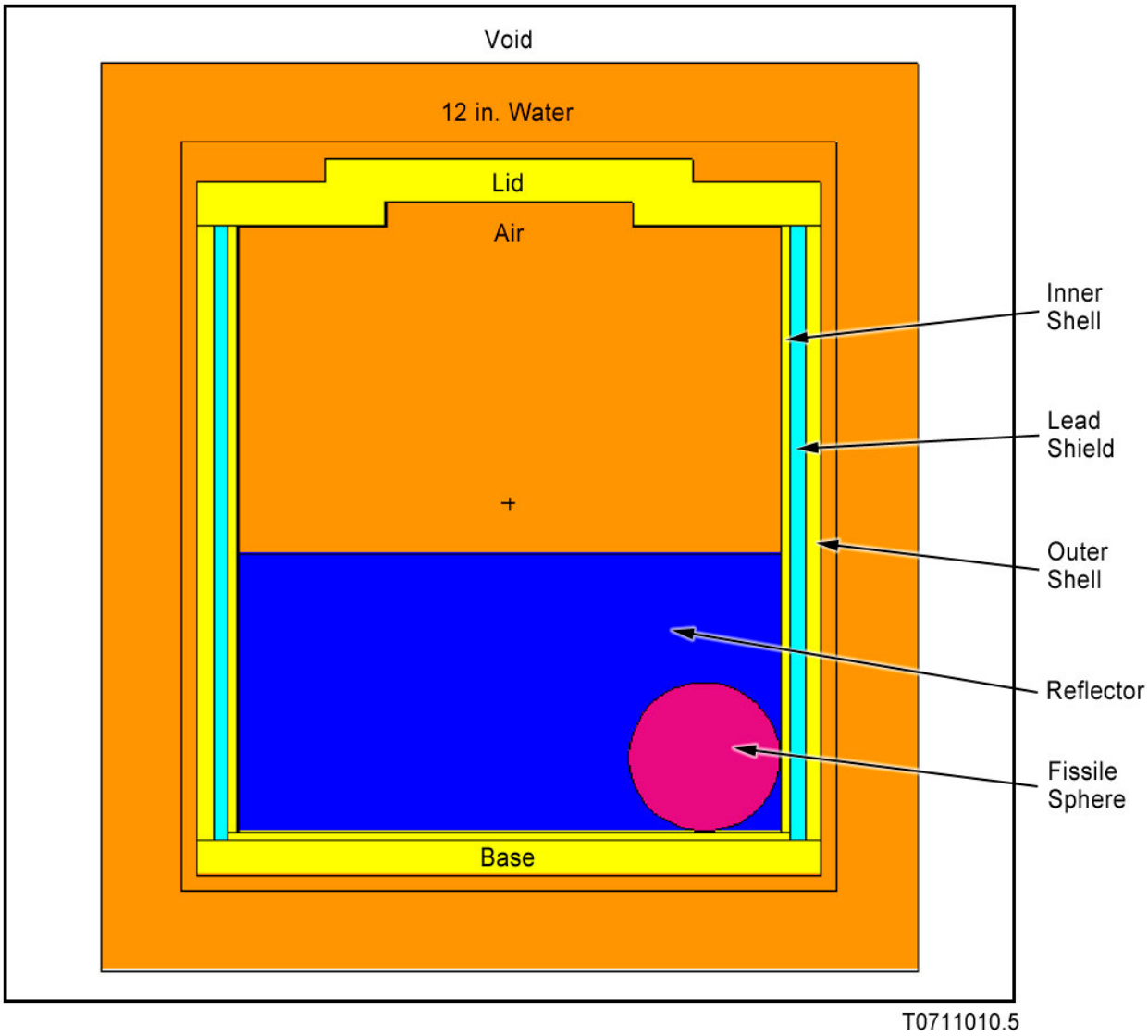

Figure 6-6. Elevation View of a Single 10-160B Cask with the Fissile and Reflector Regions for the HAC Centroid Case (Case f003).

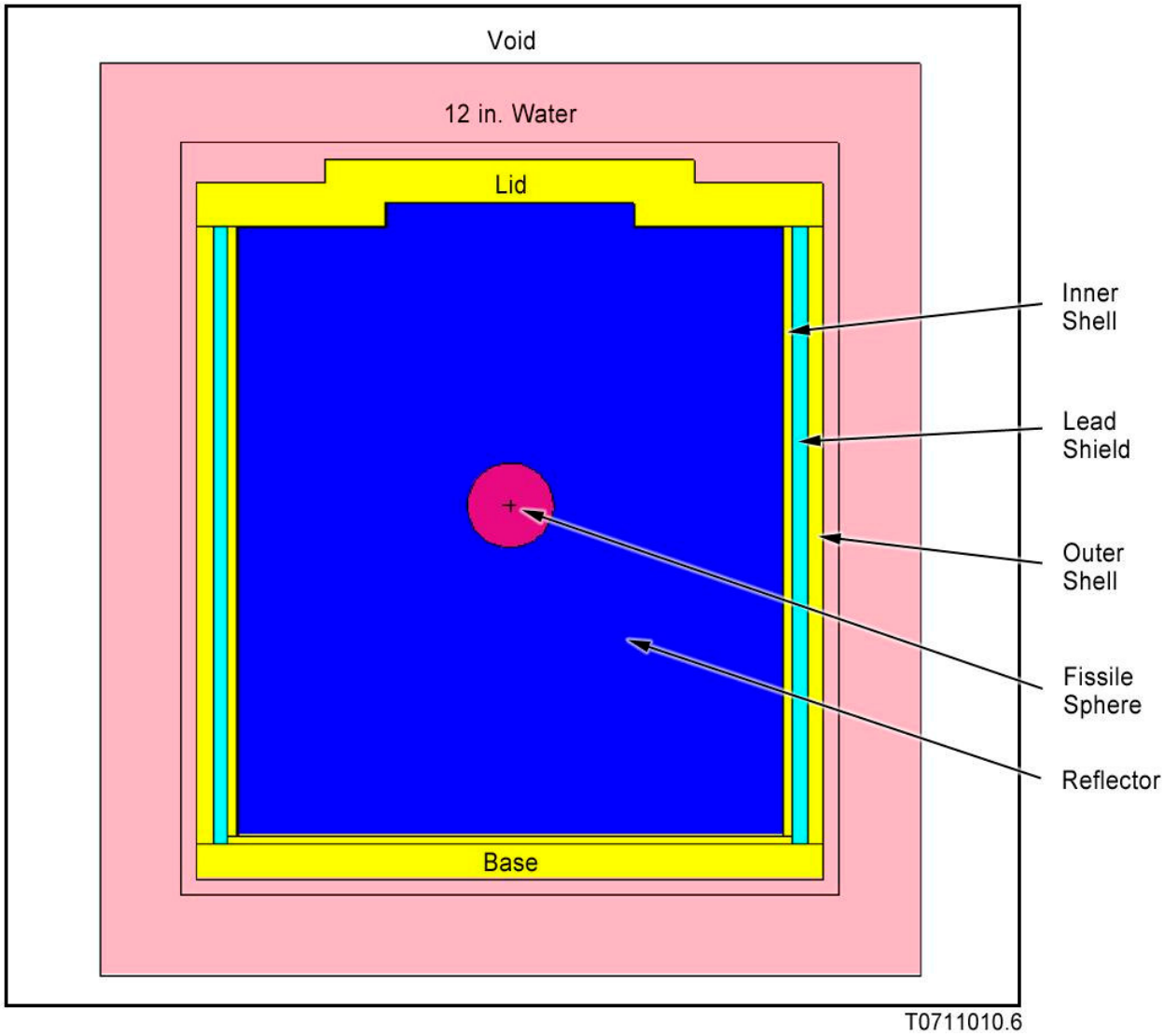

Figure 6-7. Elevation View of a Single 10-160B Cask with the Fissile and Reflector Regions for the HAC Base Center Case (Case f013).

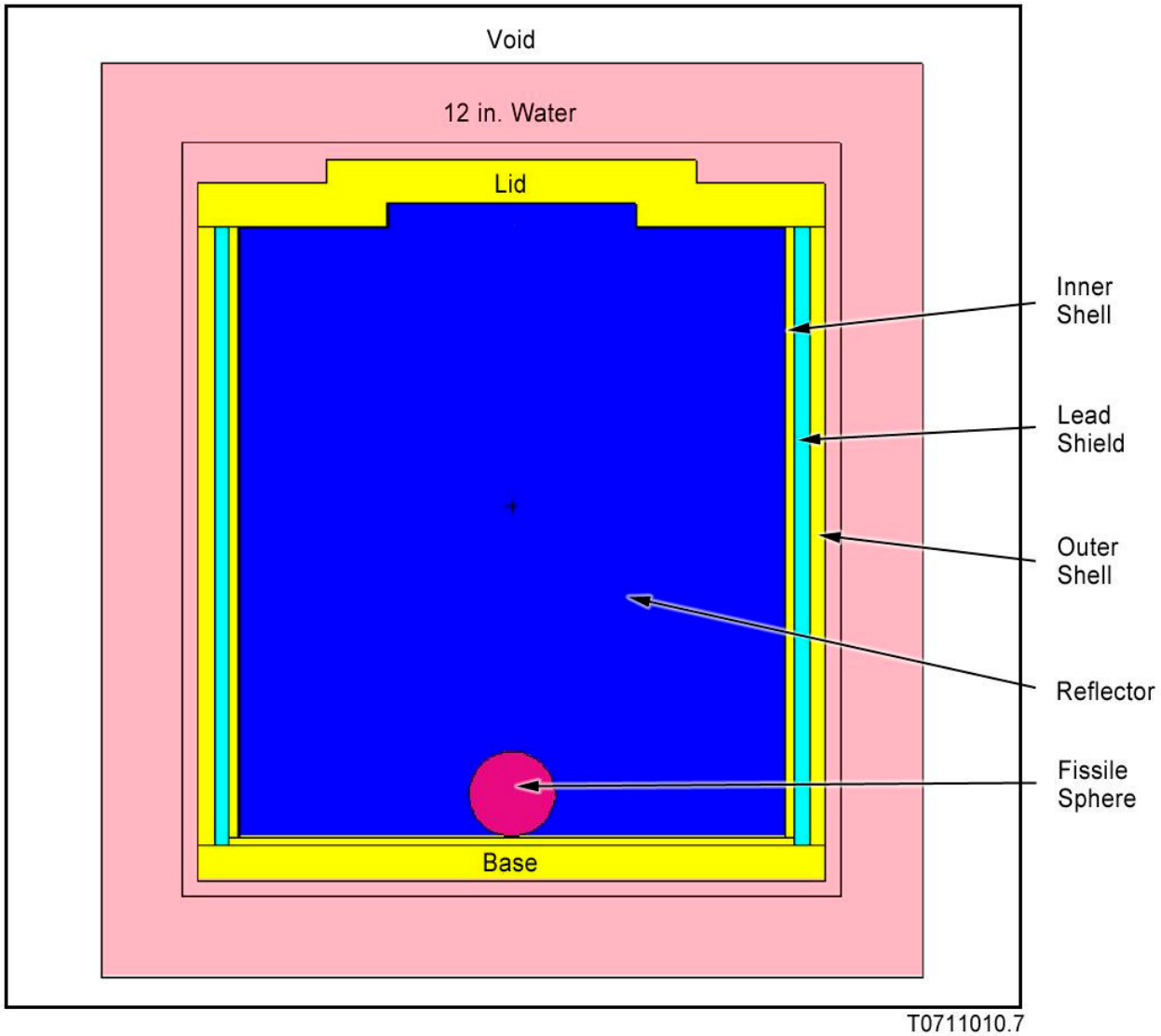

Figure 6-8. Elevation View of a Single 10-160B Cask with
the Fissile and Reflector Regions for the HAC Base Corner Case (Case f023).

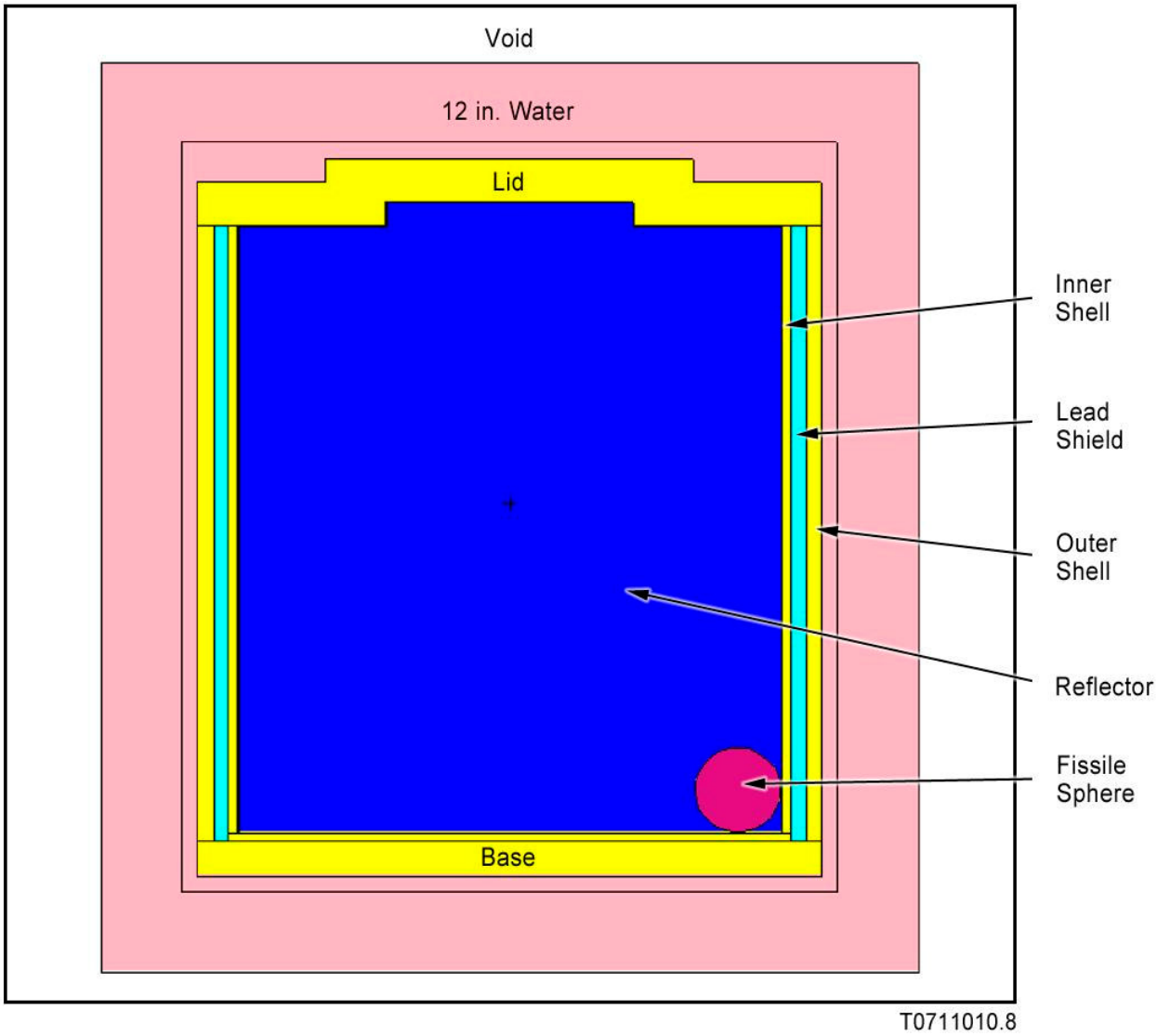

Figure 6-9. Elevation View of a Single 10-160B Cask with the Fissile and Reflector Regions for the HAC Lid Corner Case (Case f033).

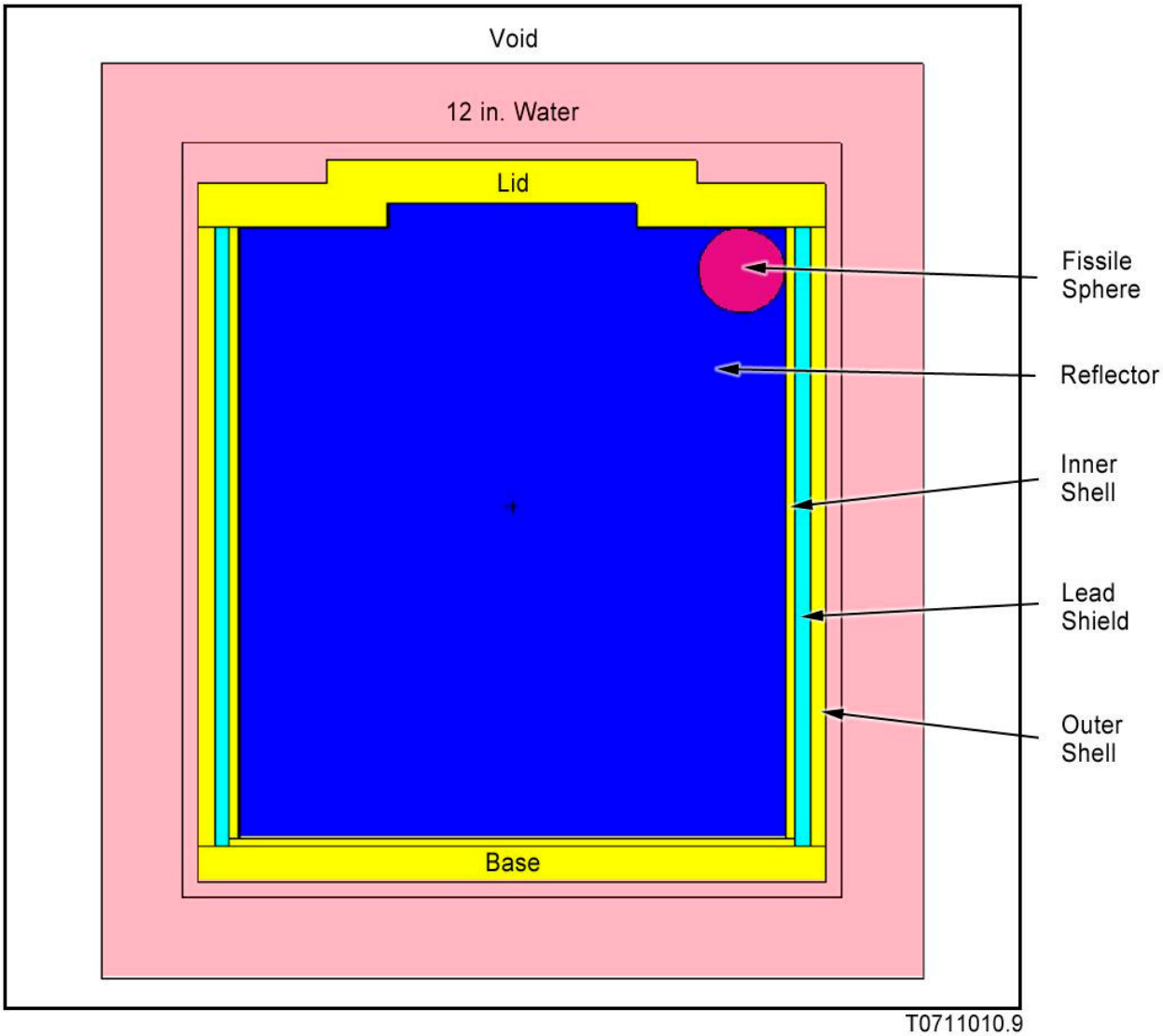

Table 6.4. Assumed Nominal Dimensions of the 10-160B Cask MCNP Criticality Model.

Zone (material)	Axial zone length		Zone outer radius		Zone radial thickness	
	in	cm	in	cm	in	cm
Cask Dimensions[a]						
Secondary Lid[b] (Carbon Steel)	5.5	13.970	23	58.420	23	58.420
Primary Lid[b] (Carbon Steel)	5.5	13.970	39	99.060	23.5	59.690
Cask cavity (void)	76.75	194.945	33.875	86.043	33.875	86.043
Inner liner[c] (SS 304)	77	195.580	34	86.360	0.125	0.318
Inner shell (Carbon Steel)	77	195.580	35.125	89.218	1.125	2.858
Lead shield (Lead)	78	198.120	37	93.980	1.875	4.763
Outer Shell (Carbon Steel)	78	198.120	39	99.060	2	5.080
Base (Carbon Steel)	5.5	13.970	39	99.060	39	99.060

[a] The bottom tapered edge of the cask is not modeled. Also, the impact limiter and thermal barrier are not included in the model. These modeling simplifications have negligible impact on the results.

[b] The primary and secondary lids are stepped. The dimensions listed in the table are the inner/outer-most dimensions.

[c] The inner lining is irregular in shape but essentially consists of 11 gage steel covering the entire cask inner cavity.

6.3.2 Material Properties

Table 6.5 shows the material compositions used in the MCNP models including the density of the material and the MCNP cross-sectional set name. Any changes in material properties under tests in 10 CFR 71.71 and 71.73, *Hypothetical Accident Conditions*, are minor and have a minimal impact on the results of this evaluation due to the conservative assumptions used to model the payload.

The S(□,□) cross-sections for hydrogen in the HAC regions were selected as light water (lwtr.60t) since the light water cross-sections provide a slightly higher reactivity than do the corresponding cross-sections for polyethylene.

Dry air was used for the NCT cases where the cask is dry. Air was assumed to only contain N_2 and O_2, thereby ignoring the trace amounts of Ar and other gases.

Table 5. Materials and Elemental Compositions Used to Perform the Criticality Analyses for the 10-160B Cask.

Item	Isotope Element	MCNP ZAID	Mass Fraction	Density (g/cm^3)
NCT Fissile	H^1	1001.66c	Table 6.2	Table 6.2
	H^2	1002.66c	Table 6.2	Table 6.2
	Be^9	4009.66c	Table 6.2	Table 6.2
	C	6000.66c	Table 6.2	Table 6.2
	Pu^{239}	94239.66c	Table 6.2	Table 6.2
	S(α,β)	poly.60t		
	S(α,β)	be.60t		
		Totals	1.00	Table 6.2
HAC Fissile	H^1	1001.66c	Table 6.3	Table 6.3
	H^2	1002.66c	Table 6.3	Table 6.3
	Be^9	4009.66c	Table 6.3	Table 6.3
	C	6000.66c	Table 6.3	Table 6.3
	O^{16}	8016.66c	Table 6.3	Table 6.3
	O^{17}	8017.66c	Table 6.3	Table 6.3
	Pu^{239}	94239.66c	Table 6.3	Table 6.3
	S(α,β)	lwtr.60t		
	S(α,β)	be.60t		
		Totals	1.00	Table 6.3
NCT Reflector	H^1	1001.66c	Table 6.2	Table 6.2
	H^2	1002.66c	Table 6.2	Table 6.2
	Be^9	4009.66c	Table 6.2	Table 6.2
	C	6000.66c	Table 6.2	Table 6.2
	Pu^{239}	94239.66c	Table 6.2	Table 6.2
	S(α,β)	poly.60t		
	S(α,β)	be.60t		
		Totals	1.00	Table 6.2
HAC Reflector	H^1	1001.66c	Table 6.3	Table 6.3
	H^2	1002.66c	Table 6.3	Table 6.3
	Be^9	4009.66c	Table 6.3	Table 6.3
	C	6000.66c	Table 6.3	Table 6.3
	O^{16}	8016.66c	Table 6.3	Table 6.3
	O^{17}	8017.66c	Table 6.3	Table 6.3
	Pu^{239}	94239.66c	Table 6.3	Table 6.3
	S(α,β)	lwtr.60t		
	S(α,β)	be.60t		
		Totals	1.00	Table 6.3
Air	N^{14}	7014.66c	0.761985	9.30E-04
	N^{15}	7015.66c	0.003015	3.68E-06
	O^{16}	8016.66c	0.234905	2.87E-04
	O^{17}	8017.66c	0.000095	1.16E-07
		Totals	1.00	0.00122

Item	Isotope Element	MCNP ZAID	Mass Fraction	Density (g/cm^3)
Carbon Steel	C	6000.66c	0.003000	0.023550
	Si^{28}	14028.66c	0.002572	0.020190
	Si^{29}	14029.66c	0.000135	0.001060
	Si^{30}	14030.66c	0.000092	0.000722
	P^{31}	15031.66c	0.000400	0.003140
	S	16000.66c	0.000500	0.003925
	Mn^{55}	25055.66c	0.010300	0.080855
	Fe^{54}	26054.66c	0.055383	0.434757
	Fe^{56}	26056.66c	0.901554	7.077199
	Fe^{57}	26057.66c	0.021193	0.166365
	Fe^{58}	26058.66c	0.002870	0.022530
	Cu^{63}	29063.66c	0.001370	0.010755
	Cu^{65}	29065.66c	0.000630	0.004946
		Totals	1.00	7.85
SS-304	C	6000.66c	0.000300	0.002409
	Cr^{50}	24050.66c	0.008345	0.067010
	Cr^{52}	24052.66c	0.167349	1.343812
	Cr^{53}	24053.66c	0.019341	0.155308
	Cr^{54}	24054.66c	0.004905	0.039387
	Mn^{55}	25055.66c	0.019994	0.160552
	Fe^{54}	26054.66c	0.038378	0.308175
	Fe^{56}	26056.66c	0.624743	5.016686
	Fe^{57}	26057.66c	0.014686	0.117929
	Fe^{58}	26058.66c	0.001989	0.015972
	Ni^{58}	28058.66c	0.067178	0.539439
	Ni^{60}	28060.66c	0.026768	0.214947
	Ni^{61}	28061.66c	0.001183	0.009499
	Ni^{62}	28062.66c	0.003834	0.030787
	Ni^{64}	28064.66c	0.001008	0.008094
		Totals	1.00	8.03
Lead	Pb	82000.50c	1.000000	11.34
		Totals	1.00	11.34
Water	H^1	1001.66c	0.111865	0.111865
	H^2	1002.66c	0.000034	3.35E-05
	O^{16}	8016.66c	0.887743	0.887743
	O^{17}	8017.66c	0.000359	0.000359
	S(α,β)	lwtr.60t		
		Totals	1.00	1.00

6.3.3 Computer Codes and Cross-Sectional Libraries

The k_{eff} values are calculated using the computer program MCNP Version 5, Release 1.40[3]. The MCNP computer program has been approved for use with quality affecting analyses and is under configuration control in accordance with FSWO-QAP-001, *Quality Assurance Procedures*, QP 3-10, *Software Management*[2].

MCNP calculates k_{eff} using the Monte Carlo method from an arbitrary three-dimensional configuration using point wise continuous-energy cross-sectional data. Because of the statistical basis of this method, the results show an average k_{eff} value and a standard deviation, which represents the 1σ (68%) confidence interval. The MCNP criticality runs used 4,000 neutrons per generation with 3950 active generations. This results in a standard deviation of approximately 0.00025 or less for all calculations performed in this evaluation.

Table 6.5 shows the material compositions used in the MCNP models including the density of the material and the MCNP cross-sectional set name. The input for MCNP does not include an entry explicitly for the nuclear properties of materials; rather, it obtains this information automatically based on the particular library specified by the user for each of the isotopes and/or elements of the materials used in the model. The libraries are distributed with the code, and many libraries have been developed over the years by different entities for specific purposes. Although multiple libraries are available for the materials of this package and payload, the library based on Evaluated Nuclear Data Files VI (ENDF-VI) is used exclusively with the exception of elemental lead (Pb) that is not adequately addressed in ENDF-VI. (ENDF-VI has three of the four naturally occurring isotopes of Pb.) This library, named "endf60," is used because it represents the most recent available data from the centralized U.S. organization coordinating the establishment of nuclear data (the National Nuclear Data Center at Brookhaven National Laboratory). The Evaluated Nuclear Data Files V (ENDF-V) is used for elemental lead.

6.3.4 Demonstration of Maximum Reactivity

As mentioned in Section 6.3.1, the fissile material is conservatively configured as a compact sphere of fuel with varying amounts of hydrogenous materials. The optimal H/Pu ratio was determined by selecting the configuration with the maximum reactivity. This is the most reactive configuration consistent with a possible damaged condition and the chemical and physical form of the material. This configuration is extremely conservative and would not be expected to occur under NCT or HAC. However, considering the fact that no credit is taken for geometry control provided by the waste drums, this configuration conservatively meets the requirements of 10 CFR 71.55(b) and 71.55(e)(1). The HAC criticality analyses were performed assuming that water leaked into the cask cavity, filling all voids not occupied by the polyethylene, plutonium or beryllium materials.

In addition, maximum reactivity is assured by other features of the simulation. The inclusion of beryllium as a special moderating/reflecting material was demonstrated to increase reactivity. Credit was not taken for the presence of neutron absorbers in the cask payload volume, such as the metal drums and internal drum support structure, which would lower the reactivity.

The majority of the HAC cases had a 25% volume fraction of polyethylene and 1% by weight of beryllium as a special reflector. Four cases were run with the beryllium reduce to 0.5% and an additional four cases were run with beryllium eliminated. An additional four cases were run with the polyethylene reduced to 20% by volume. These cases establish that the 25% volume fraction of polyethylene and 1% by weight of beryllium were the most reactive configuration.

6.4 SINGLE PACKAGE EVALUATION

6.4.1 Configuration

The general requirements of 10 CFR 71.55(b) are that the package must be subcritical if water were to leak into the containment system so that, under the following conditions, maximum reactivity of the fissile material is attained:

1. Most reactive credible configuration consistent with the chemical and physical form of the material
2. Moderation by water to the most reactive credible extent
3. Close full reflection of the containment system by water on all sides or such greater reflection of the system as may additionally be provided by the surrounding material of the packaging.

The analysis assumes that water leaks into the cask cavity, and the waste drums are not present. The criticality requirements of 10 CFR 71.55(e) for fissile material packages in accident conditions impose three conditions on the analysis. These conditions must be applied to a package that has undergone the tests specified in 10 CFR 71.73, which means that credit may be taken for the cask remaining leaktight during HAC. The conditions are as follows.

1. The fissile material is in the most reactive credible configuration consistent with the damaged condition of the package and the chemical and physical form of the contents.
2. Water moderation occurs to the most reactive credible extent consistent with the damaged condition of the package and the chemical and physical form of the contents.
3. There is full reflection by water on all sides as close as is consistent with the damaged condition of the package.

6.4.2 Results

With the cask containment dry, the most reactive conditions occur when the quantity of fissile material is in a spherical form and most compact. Although the 10-160B Cask is designed to maintain the payload in the normal, as-loaded configuration shown in Figures 6-1 and 6-2, this evaluation does not take credit for the integrity of the waste drums. The most reactive configuration for this evaluation occurs when the plutonium, polyethylene, and beryllium form a sphere. Various H/Pu ratios are evaluated for the single cask. H/Pu ratio is associated with a given spherical diameter, assuming the material densities, as noted in Tables 6.2 (NCT) and 6.3 (HAC).

The results of the NCT analysis are shown in Figure 6-10 and summarized in Table 6.6. The most reactive NCT configuration was obtained with the fissile sphere in the base corner with water on the outside of the cask and an H/Pu ratio of 1400. The maximum K_{eff} is 0.42656.

The results of the HAC analysis are presented in Figure 6-11 and summarized in Table 6.7. The most reactive HAC configuration was obtained with the fissile sphere in the lid corner with an H/Pu ratio of 900. The maximum K_{eff} is 0.93252 and is below the limit of 0.94. Table 6.7 shows that there is a subcritical margin even if the fissile material is in the worst case configuration. Tables 6.6 and 6.7 summarize these results and demonstrate that all payload configurations meet the NCT and HAC criticality requirements of 10 CFR 71.55(b), (d), and (e).

In addition, Table 6.7 summarizes the results of the analyses that were preformed to examine the effect of less beryllium (0% and 0.5% by mass of total CH_2 and Pu^{239}) and less polyethylene (20% by volume of the 10 drums). The results (Cases f042 through f065) clearly show, by comparison with Case f033, that the most reactive configuration is for 25% by volume CH_2 and 1% by mass for beryllium.

Figure 6-10. Single Unit K_{eff} vs. H/Pu Ratio for NCT for Various Configurations

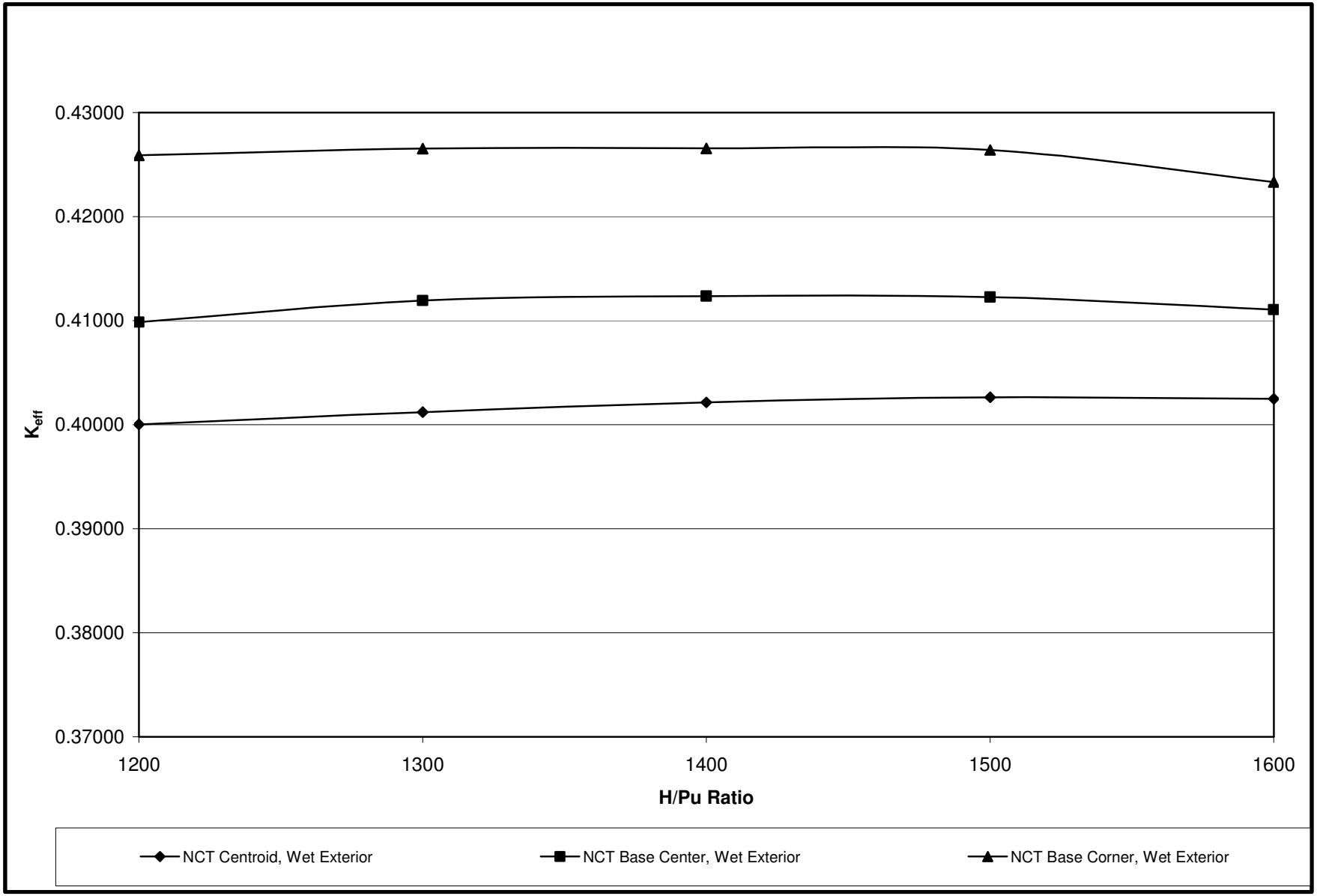

Table 6. Single Unit K_{eff} vs. H/Pu Ratio for NCT for Various Configurations

NCT 10-160B Single Cask					
Location	MCNP Case	H/Pu Ratio	K_{eff}	σ_{MCNP}	AEF[a] (eV)
NCT Centroid, Wet Exterior	f307	1200	0.40003	0.00015	0.0498
	f308	1300	0.40121	0.00015	0.0488
	f309	1400	0.40215	0.00014	0.0480
	f310	1500	0.40264	0.00014	0.0472
	f311	1600	0.40249	0.00015	0.0465
NCT Base Center, Wet Exterior	f327	1200	0.40987	0.00015	0.0508
	f328	1300	0.41195	0.00015	0.0497
	f329	1400	0.41236	0.00015	0.0488
	f330	1500	0.41228	0.00015	0.0480
	f331	1600	0.41108	0.00014	0.0473
NCT Base Corner, Wet Exterior	f367	1200	0.42589	0.00015	0.0519
	f368	1300	0.42655	0.00015	0.0507
	f369	1400	0.42656	0.00015	0.0497
	f370	1500	0.42641	0.00015	0.0489
	f371	1600	0.42334	0.00015	0.0481

[a] Energy corresponding to the average neutron lethargy causing fission (AEF)

Figure 6-11. Single Unit K_{eff} vs. H/Pu Ratio for HAC for Various Configurations

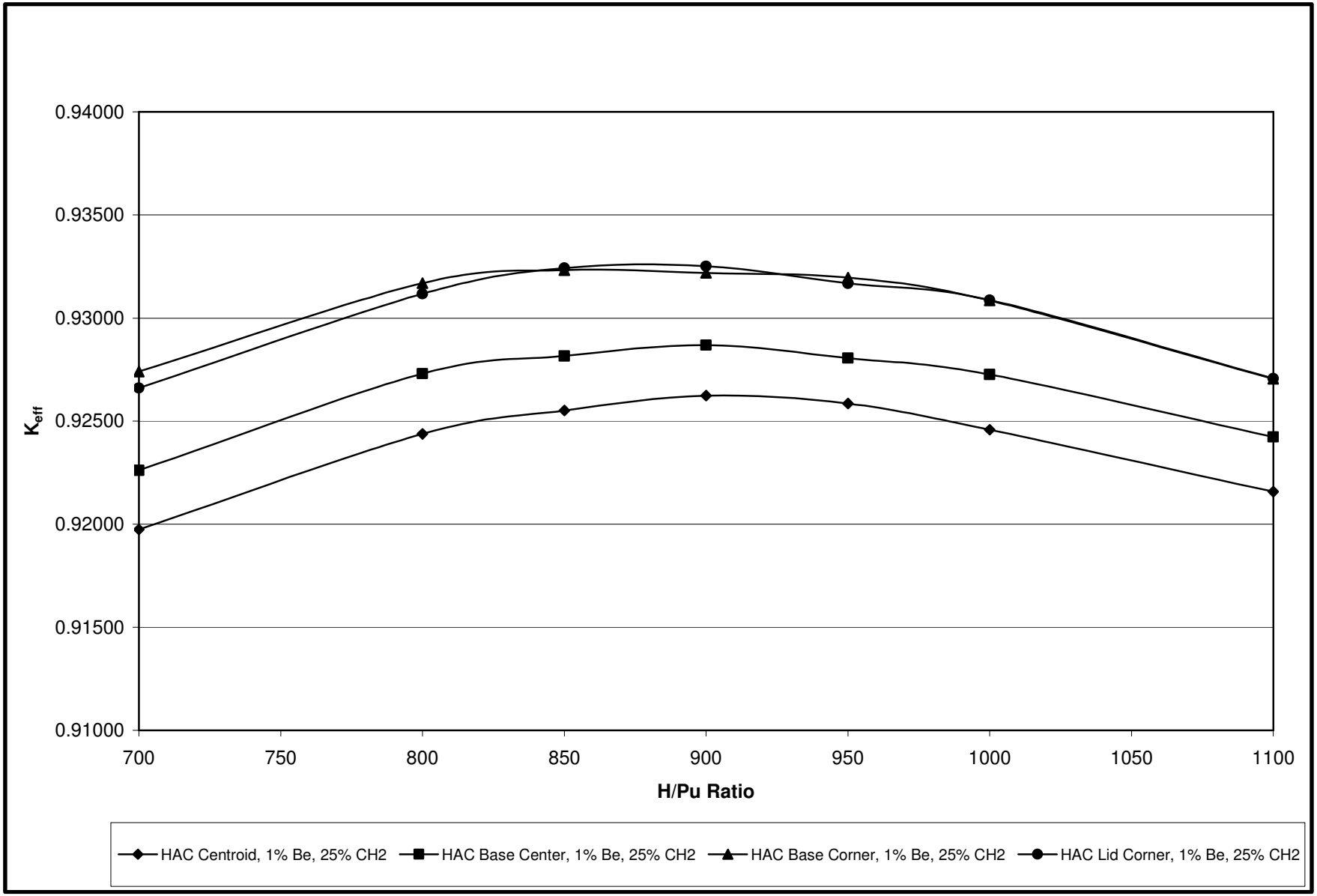

Table 7. Single Unit K_{eff} vs. H/Pu Ratio for HAC for Various Configurations

HAC 10-160B Single Cask					
Location	MCNP Case	H/Pu Ratio	K_{eff}	σ_{MCNP}	AEF[a] (eV)
HAC Centroid, 1% Be, 25% CH_2	f000	700	0.91975	0.00022	0.0586
	f001	800	0.92438	0.00020	0.0556
	f002	850	0.92552	0.00021	0.0543
	f003	900	0.92624	0.00020	0.0532
	f004	950	0.92586	0.00021	0.0522
	f005	1000	0.92458	0.00020	0.0513
	f006	1100	0.92158	0.00019	0.0498
HAC Base Center, 1% Be, 25% CH_2	f010	700	0.92261	0.00021	0.0590
	f011	800	0.92731	0.00020	0.0559
	f012	850	0.92816	0.00020	0.0546
	f013	900	0.92869	0.00021	0.0535
	f014	950	0.92806	0.00020	0.0525
	f015	1000	0.92726	0.00020	0.0515
	f016	1100	0.92424	0.00019	0.0499
HAC Base Corner, 1% Be, 25% CH_2	f020	700	0.92741	0.00021	0.0594
	f021	800	0.93169	0.00021	0.0562
	f022	850	0.93232	0.00020	0.0548
	f023	900	0.93219	0.00021	0.0537
	f024	950	0.93197	0.00020	0.0527
	f025	1000	0.93085	0.00020	0.0517
	f026	1100	0.92705	0.00020	0.0502
HAC Lid Corner, 1% Be, 25% CH_2	f030	700	0.92661	0.00021	0.0594
	f031	800	0.93118	0.00021	0.0562
	f032	850	0.93243	0.00020	0.0549
	f033	900	0.93252	0.00020	0.0537
	f034	950	0.93168	0.00020	0.0527
	f035	1000	0.93087	0.00020	0.0518
	f036	1100	0.92707	0.00019	0.0502
HAC Lid Corner, 0.5% Be, 25% CH_2	f042	850	0.93202	0.00020	0.0549
	f043	900	0.93213	0.00020	0.0537
	f044	950	0.93219	0.00020	0.0526
	f045	1000	0.93076	0.00020	0.0518
HAC Lid Corner, 0.0% Be, 25% CH_2	f052	850	0.93188	0.00021	0.0549
	f053	900	0.93199	0.00020	0.0536
	f054	950	0.93127	0.00020	0.0527
	f055	1000	0.93077	0.00020	0.0518
HAC Lid Corner, 1% Be, 20% CH_2	f062	850	0.92786	0.00020	0.0549
	f063	900	0.92859	0.00020	0.0538
	f064	950	0.92790	0.00020	0.0526
	f065	1000	0.92661	0.00019	0.0518

[a] Energy corresponding to the average neutron lethargy causing fission (AEF)

6.5 EVALUATION OF PACKAGE ARRAYS UNDER NCT

6.5.1 Configuration

The criticality requirements in 10 CFR 71.59(a) for arrays of fissile material packages in NCT require that 5 times N undamaged packages with nothing between the packages be subcritical, assuming packages are stacked together in any arrangement and with close full reflection on all sides of the array by water.

Normally, the array calculations begin with an infinite array model because, if the infinite array is adequately subcritical, no additional array calculations are necessary. If the infinite array is not shown to be safely subcritical, a finite array of packages is analyzed until an array size is found that is adequately subcritical. An infinite array of 10-160B Casks with the payloads described in Section 6.2 is adequately subcritical during NCT. Therefore, finite array cases are not necessary. The MCNP model for the infinite array calculations is identical to the single-cask model except that the 30.5 cm (12-in.) water reflector is removed. Six reflective surfaces are added to form a tight-fitting hexagon around the cask and two reflective surfaces are placed at the top and bottom of the cask, as shown in Figure 6-12. The use of reflective surfaces around the side, top, and bottom simulates an infinite array of casks in the radial and axial directions. Two additional infinite array cases are run where the cask spacing is varied from 5 cm to 10 cm.

6.5.2 Results

Table 6.8 summarizes the results of the NCT infinite array calculations. Because the k_{eff} values decrease slightly with increasing cask spacing (0.45328 for close-packed versus 0.44635 for 10 cm cask spacing), these cases indicate that there is some neutronic communication between the casks in the array when the containment is dry and there is no interspersed moderation. The results for the NCT array calculations indicate that an infinite array of 10-160B Casks loaded with any fissile configurations is safely subcritical with a maximum k_{eff} value of 0.45328 (case f369a).

Figure 12. Plan View of an Infinite Array of NCT 10-160B Casks (MCNP case f369a).

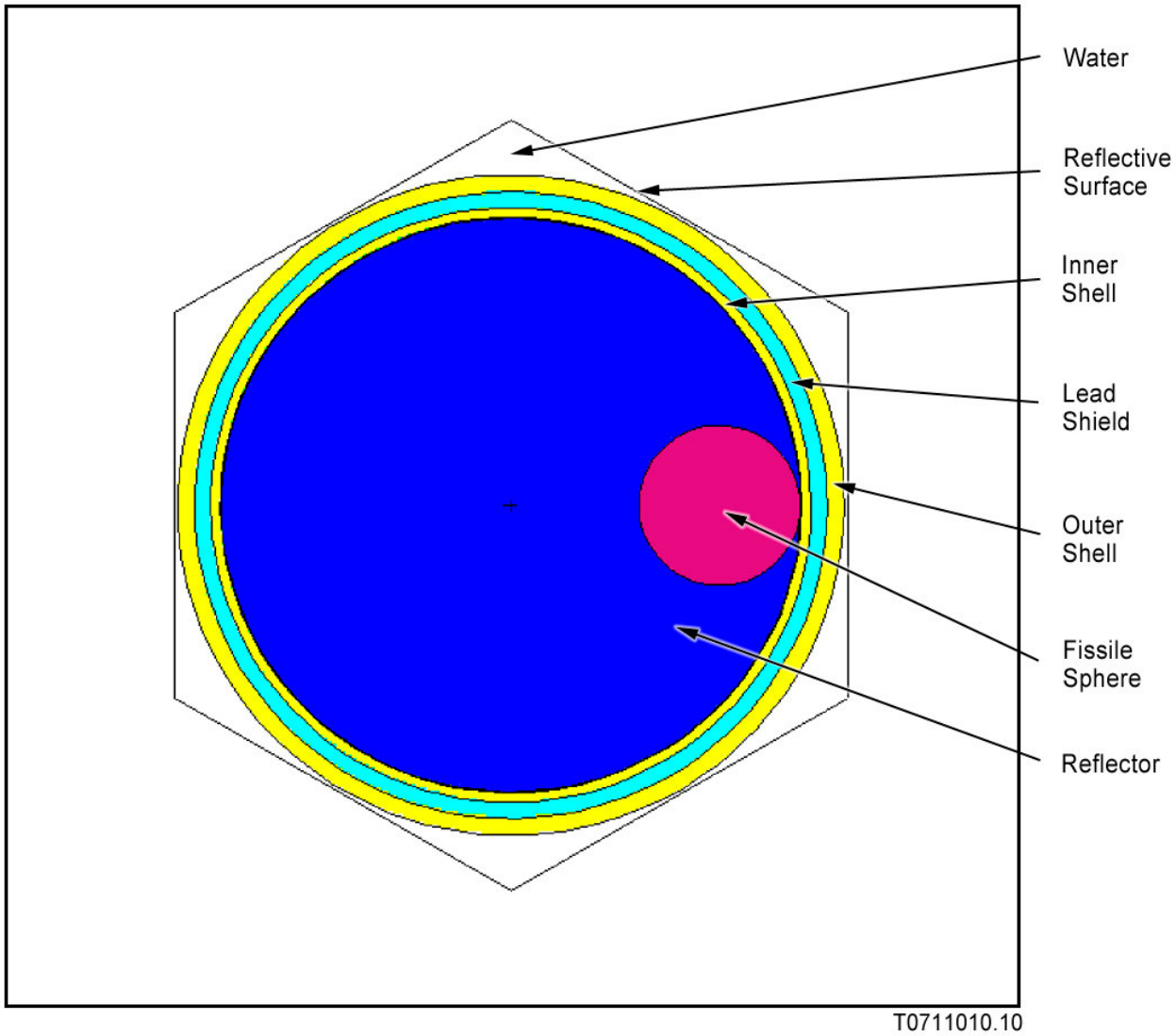

Table 8. Values of K_{eff} vs. Array Spacing for an Infinite Array of 10-160B Casks Under NCT.

NCT 10-160B Infinite Array					
Location	MCNP Case	Array Spacing	K_{eff}	σ_{MCNP}	AEF[a] (eV)
Base Corner	f369a	0.00	0.45328	0.00015	0.0495
	f369b	5.00	0.44946	0.00015	0.0496
	f369c	10.00	0.44635	0.00015	0.0496

[a] Energy corresponding to the average neutron lethargy causing fission (AEF)

6.6 EVALUATION OF PACKAGE ARRAYS UNDER HAC

6.6.1 Configuration

The criticality requirements of 10 CFR 71.59(a)(2), for arrays of fissile material packages under accident conditions require that 2 times N (N ≥ 0.5) damaged packages be subcritical, assuming the packages are stacked together in any arrangement, with close full reflection on all sides of the array by water, and with optimum interspersed hydrogenous moderation. These conditions are applied to a package that has undergone the tests specified in 10 CFR 71.73, which means that credit may be taken for the cask remaining leaktight during accident conditions. However, although the 10-160B Cask remains leaktight under the accident-condition tests specified in 10 CFR 71.73, the criticality analysis for arrays during accident conditions conservatively assumes in-flooding of the cask containment.

As discussed in Section 6.5, the array calculations normally begin with an infinite array model. If the infinite array is adequately subcritical, no additional array calculations are necessary. The infinite array model developed for NCT in Section 6.5 is used as the baseline model for the HAC array calculations. The only differences being the addition of interspersed moderation (see Figure 6.4) between the casks in the array per 10 CFR 71.59(a) (2) and the worst case single Cask model evaluated under HAC. The NCT array cases assumed nothing in between the casks per 10 CFR 71.59(a) (1).
With a hexagonal infinite array of casks, there are two basic orientations of the fissile sphere in a hexagonal cell, either at the flat (Figure 6-13) or at the apex (Figure 6-14). If the fissile sphere is at the flat, two spheres in adjacent cells are very close (four spheres if at the base or lid of the cask). If the fissile sphere is at the apex, three spheres in adjacent cell are farther apart (six spheres if at the base or lid of the case).

Figure 13. Plan View of an Infinite Array of HAC 10-160B Casks (MCNP case f022flat00).

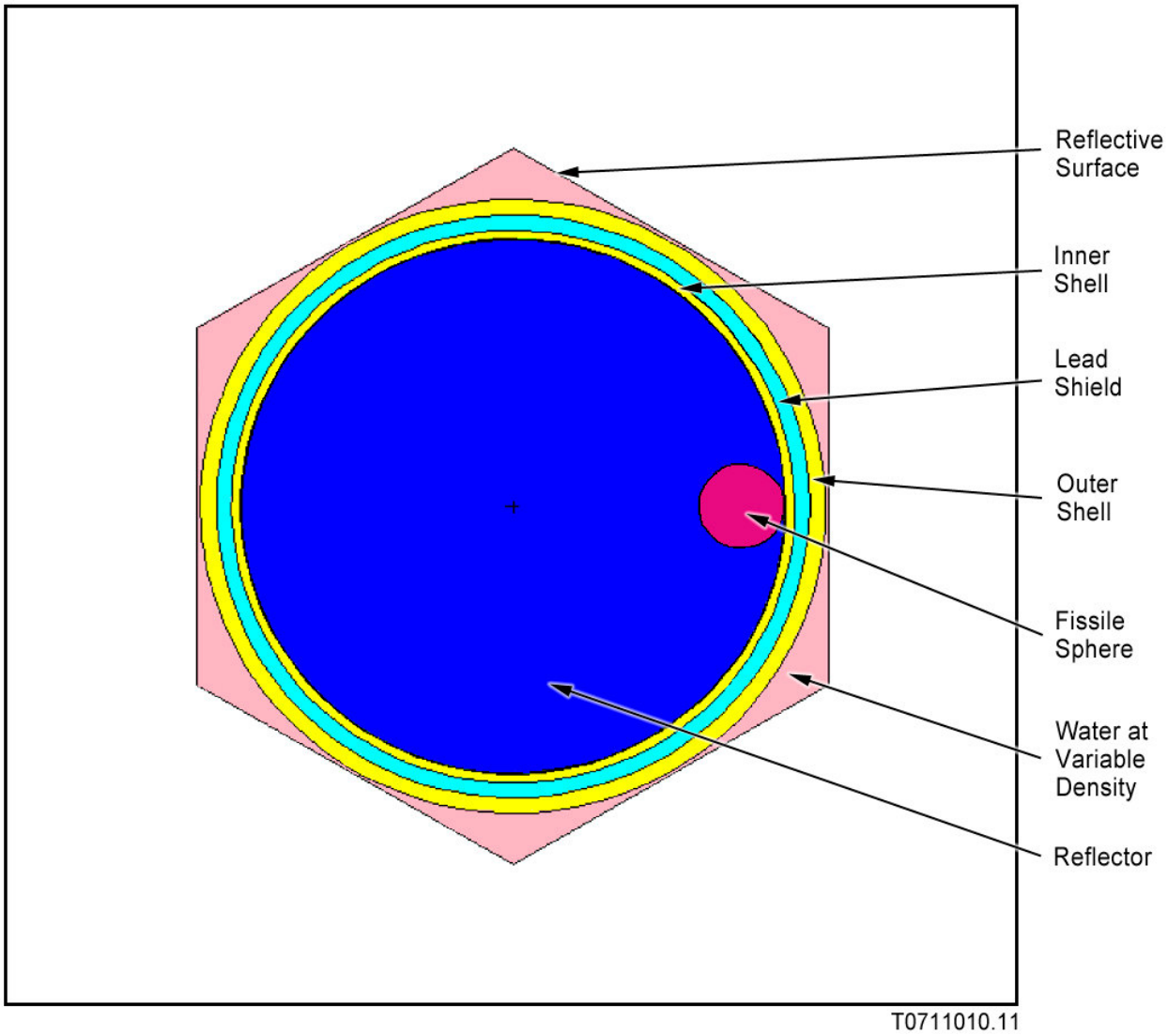

Figure 14. Plan View of an Infinite Array of HAC 10-160B Casks (MCNP case f022apex00).

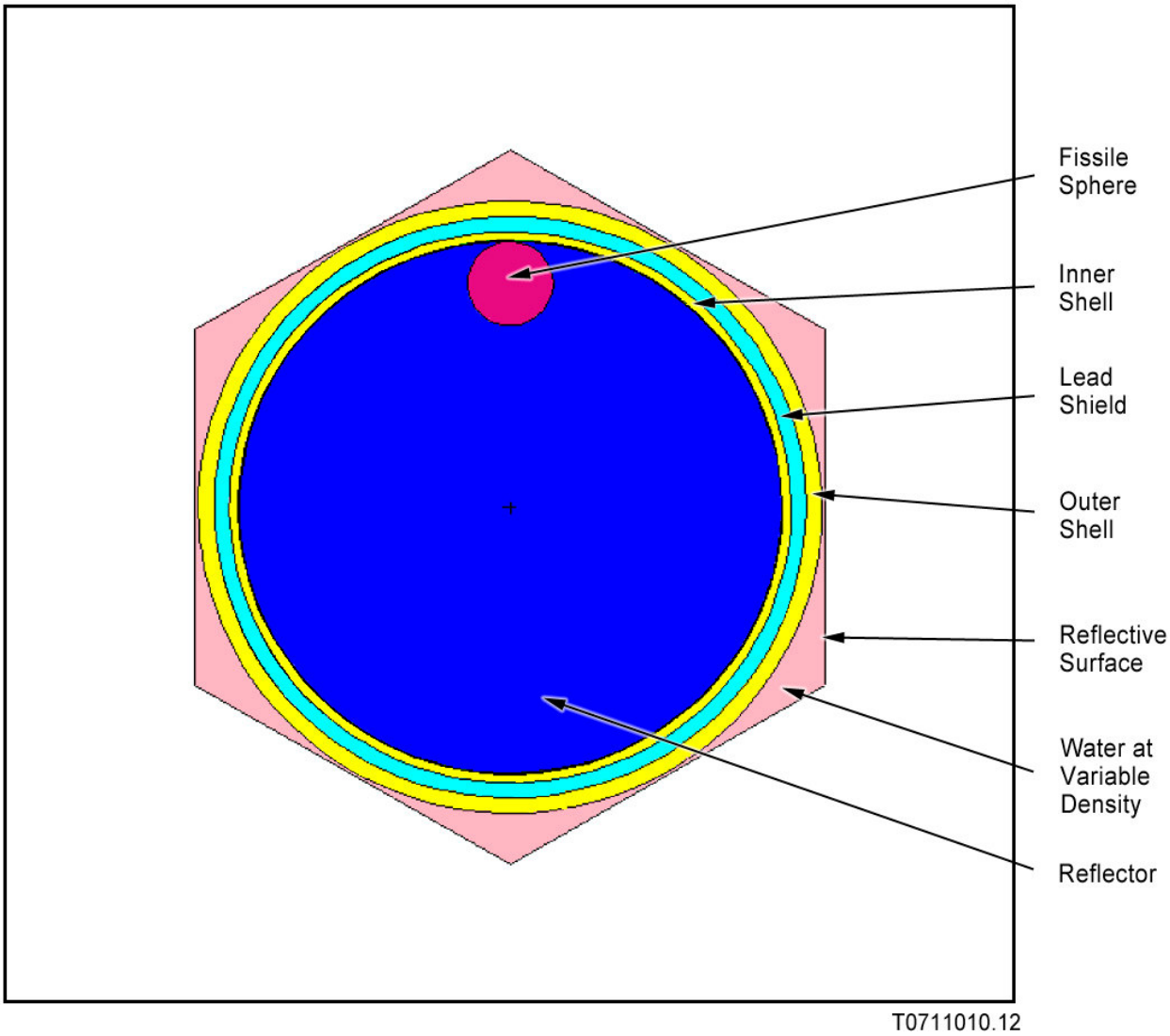

6.6.2 Results

The individual HAC cases, as summarized in Table 6.7, show that case f033 was the most reactive. Case f033 was a lid corner case. Since the effective axial distance between adjacent casks in an infinite array is greater with a lid corner case, the most reactive base corner case (f022) was selected for infinite array evaluation as well.

The HAC array cases have a baseline external configuration identical to the NCT array cases except that the interspersed region is filled with water at various densities and the fissile sphere is evaluated at the apex and flat (see Figures 6.13 and 6.14). Table 6.9 summarizes the values of K_{eff} for an infinite array of 10-160B casks under HAC for various interspersed water densities ranging from 0.00 to 1.00 g/cm^3. As noted before, single unit cases designated as f033 and f022 were selected for infinite array evaluation in the apex and flat orientations. Table 6.9 presents the evaluation of these four general cases for water densities ranging from 0.00 to 0.10 g/cm^3. The f022 flat cases were extended to a maximum water density of 1.00 g/cm^3 since that composition and orientation was the most reactive from 0.00 to 0.10 g/cm^3.

The differences between the k_{eff} values for very low interspersed water densities (i.e., 0 to 0.001 g/cm^3) are statistically insignificant. However, water densities greater than 0.01 g/cm^3 indicate that the k_{eff} values decrease with increasing density. This is most likely due to the increased absorption of neutrons in the water. Therefore, optimum interspersed moderation corresponds to dry, or very low, moderation between the casks in the array.

The results for the HAC array calculations indicate that an infinite array of 10-160B Casks loaded with any of the fissile configurations is safely subcritical with a maximum k_{eff} value of 0.93873 (case f022flat02). Because an infinite array of 10-160B Casks, with the contents described in Section 6.2, are safely subcritical during HAC no finite array cases are necessary. Appendix 6.9.2 contains representative MCNP input files used in this evaluation.

Table 9. Values of K_{eff} vs Interspersed Water Densities for an Infinite Array of 10-160B Casks Under HAC.

HAC 10-160 B Infinite Array					
Location	MCNP Case	Water Fraction	K_{eff}	σ_{MCNP}	AEF[a] (eV)
HAC Base Corner	f022apex00	0.00000	0.93764	0.00021	0.0548
	f022apex01	0.00010	0.93749	0.00020	0.0548
	f022apex02	0.00100	0.93770	0.00020	0.0548
	f022apex03	0.01000	0.93754	0.00020	0.0548
	f022apex04	0.10000	0.93594	0.00020	0.0549
	f022flat00	0.00000	0.93871	0.00020	0.0548
	f022flat01	0.00010	0.93870	0.00020	0.0548
	f022flat02	0.00100	0.93873	0.00020	0.0548
	f022flat03	0.01000	0.93829	0.00021	0.0548
	f022flat04	0.10000	0.93745	0.00021	0.0548
	f022flat05	0.20000	0.93708	0.00021	0.0549
	f022flat06	0.30000	0.93674	0.00020	0.0548
	f022flat07	0.40000	0.93611	0.00020	0.0548
	f022flat08	0.50000	0.93551	0.00021	0.0549
	f022flat09	0.60000	0.93535	0.00020	0.0549
	f022flat10	0.70000	0.93529	0.00021	0.0549
	f022flat11	0.80000	0.93518	0.00020	0.0548
	f022flat12	0.90000	0.93461	0.00020	0.0548
	f022flat13	1.00000	0.93468	0.00020	0.0549
HAC Lid Corner	f033apex00	0.00000	0.93610	0.00020	0.0537
	f033apex01	0.00010	0.93613	0.00020	0.0537
	f033apex02	0.00100	0.93609	0.00020	0.0537
	f033apex03	0.01000	0.93603	0.00020	0.0537
	f033apex04	0.10000	0.93391	0.00020	0.0537
	f033flat00	0.00000	0.93692	0.00020	0.0536
	f033flat01	0.00010	0.93700	0.00020	0.0537
	f033flat02	0.00100	0.93713	0.00020	0.0537
	f033flat03	0.01000	0.93666	0.00020	0.0537
	f033flat04	0.10000	0.93568	0.00021	0.0537

[a] Energy corresponding to the average neutron lethargy causing fission (AEF)

6.7 FISSILE MATERIAL PACKAGES FOR AIR TRANSPORT

This section is not applicable. The Applicant did not design the 10-160B Cask for air transport nor does the Applicant seek authorization for air transport.

6.8 BENCHMARK EVALUATIONS

This section summarizes calculations for experimental criticality benchmarks used to validate the computer code MCNP 5 (LANL 2003) with pointwise ENDF/B-VI cross sections processed as described in Appendix G of the MCNP manual. The bias factor obtained from these calculations of the critical experiments is applied to the MCNP-calculated k_{eff} values in Sections 6.4 and 6.5 to ensure that adequate subcriticality margin exists for shipment of the 10-160B Cask.

The MCNP 5 executable was verified initially by executing the 42 standard test problems provided by the code developer, Los Alamos National Laboratory, and confirming that the results agree with the standard output (OUTP and MCTAL) files provided by Los Alamos National Laboratory. This section focuses on validation of MCNP's pointwise ENDF/B-VI cross-sectional library using 40 experimental criticality benchmarks involving plutonium.

6.8.1 Applicability of Benchmark Experiments

The experimental benchmarks are taken from NEA/NSC/DOC (95)03, *International Handbook of Evaluated Criticality Safety Benchmark Experiments*, [4] which discusses each experiment in detail. It includes estimates of the uncertainty in the measurements, detailed information regarding dimensions and material compositions, comparisons between the multiplication factor calculated by various computer codes, and a list of input files that are used in their calculations. The cases of interest to establish a bias for this criticality evaluation involve critical experiments for thermal plutonium solution forms. The plutonium measurements are designated in NEA/NSC/DOC (95)03 as PU-SOL-THERM-001, -002, -003, -004, -006, and -009. These are judged to be the most applicable to the 10-160B Cask criticality evaluation, which contains plutonium in solution form.

The MCNP input files for these critical experiments are taken directly from NEA/NSC/DOC (95)03 with one modification. The material definitions for several elements were modified because some elements in the MCNP ENDF/B-V cross-sectional library no longer have corresponding cross sections in the ENDF/B-VI library. This results in the need to convert material compositions for an element into the corresponding material compositions for the naturally occurring isotopes of that element. For example, if the original input file has a material composition consisting entirely of iron (cross-section ID = 26000.50c), the revised input file for the ENDF/B-VI cross sections contains a material composition as follows:

26054.66c	0.0584	(^{54}Fe)
26056.66c	0.9175	(^{56}Fe)
26057.66c	0.0212	(^{57}Fe)
26058.66c	0.0028	(^{58}Fe)

This procedure is done to reflect the naturally occurring isotopic abundances of iron of 0.058, 0.9172, 0.022, and 0.0028 for ^{54}Fe, ^{56}Fe, ^{57}Fe, and ^{58}Fe, respectively. Similar changes are made for the following elements: silicon (z=14), chromium (z=24), nickel (z=28), copper (z=29), and lead (z=82).

Additionally, three elements were simulated with the single isotope present in the EDF/B-V cross-sectional library. The material compositions were modified to allow for the additional

naturally-occurring isotope available in the ENDF/B-VI library. Therefore, hydrogen was expanded from 1001.50c to 1001.66c and 1002.66c. Nitrogen was expanded from 7014.50c to 7014.66c and 7015.66c. Oxygen was expanded from 8016.50c to 8016.66c and 8017.66c. Cross-sections were not available for 8018.66c so that naturally occurring percentage was lumped into the 8016.66c. These are minor changes that reflect the cross-section philosophy used in the criticality evaluations.

6.8.2 Bias Determination

The results of the plutonium benchmark calculations are shown in Table 6.10. The first three columns of this table show a unique case number and case identifier. The fourth column shows the ratio of elemental hydrogen to fissile (Pu^{239} plus Pu^{241}). The fifth column shows the Pu^{240} content as a percentage of the total Pu. The sixth column shows the MCNP calculated k_{eff} value, and the seventh column is the one-standard-deviation statistical uncertainty in the MCNP calculation. The eighth column is an estimate of the one-standard-deviation experimental uncertainty. The ninth column of Table 6.10 shows the average neutron energy causing fission (AEF) for these experiments that is calculated by MCNP. This parameter is useful for characterizing the neutron spectrum of the system.

These benchmark cases were chosen to bracket the criticality simulations of the 10-160B Cask. As presented at the bottom of Table 6.10, the H/X ratio of the benchmark cases ranged from a low of 91 to a high of 2807, with eighteen between 700 and 1100.

The Pu^{240} content of the 10-160B criticality simulations was assumed to be zero since Pu^{240} acts as a neutron poison. However, Pu^{239} without Pu^{240} would be unusual so benchmark cases with low Pu^{240} content were chosen when possible. All forty benchmark cases had Pu^{240} contents less than 4.65%. Thirty-three benchmark cases had Pu^{240} contents less than 3.1% and four cases less than 0.54% Pu^{240}.

The AEF values for the criticality cases for the 10-160B Cask (see Tables 6.6, 6.7, 6.8, and 6.9) range from 0.0495 to 0.0594, and are well bracketed by the AEF values for the benchmark cases.

Table 10. Results of Monte Carlo N-Particle Calculations of the Forty Plutonium Benchmark Experiments.

	Case Identifier[a]		H/X	Pu240/Pu	K_{eff}	σ_{MCNP}	$\sigma_{experiment}$	AEF (eV)[b]
1	pust.001	Case 1.T8A	370	0.04650	1.00441	0.00045	0.005	0.0877
2	pust.001	Case 2.T8A	271	0.04650	1.00505	0.00045	0.005	0.1106
3	pust.001	Case 3.T8A	215	0.04650	1.00735	0.00046	0.005	0.1344
4	pust.001	Case 4.T8A	190	0.04650	1.00338	0.00046	0.005	0.1507
5	pust.001	Case 5.T8A	180	0.04650	1.00682	0.00047	0.005	0.1591
6	pust.001	Case 6.T8A	91	0.04650	1.00752	0.00046	0.005	0.3477
7	pust.002	Case 1	524	0.03107	1.00393	0.00044	0.0047	0.0707
8	pust.002	Case 2	505	0.03107	1.00401	0.00044	0.0047	0.0724
9	pust.002	Case 3	451	0.03107	1.00264	0.00043	0.0047	0.0775
10	pust.002	Case 4	421	0.03107	1.00527	0.00045	0.0047	0.0808
11	pust.002	Case 5	393	0.03107	1.00835	0.00044	0.0047	0.0844
12	pust.002	Case 6	344	0.03107	1.00344	0.00044	0.0047	0.0924
13	pust.002	Case 7	309	0.03107	1.00599	0.00044	0.0047	0.0998
14	pust.003	Case 1	788	0.01753	1.00347	0.00041	0.0047	0.0579
15	pust.003	Case 2	756	0.01753	1.00198	0.00041	0.0047	0.0590
16	pust.003	Case 3	699	0.03107	1.00564	0.00042	0.0047	0.0615
17	pust.003	Case 4	682	0.03107	1.00431	0.00042	0.0047	0.0623
18	pust.003	Case 5	627	0.03107	1.00564	0.00042	0.0047	0.0651
19	pust.003	Case 6	563	0.03107	1.00524	0.00043	0.0047	0.0690
20	pust.003	Case 7	738	0.03107	1.00698	0.00042	0.0047	0.0588
21	pust.003	Case 8	714	0.03107	1.00567	0.00042	0.0047	0.0598
22	pust.004	Case 1	987	0.00538	1.00454	0.00039	0.0047	0.0530
23	pust.004	Case 2	977	0.00538	0.99927	0.00039	0.0047	0.0532
24	pust.004	Case 3	935	0.00538	1.00143	0.00039	0.0047	0.0543
25	pust.004	Case 4	889	0.00538	0.99917	0.00039	0.0047	0.0555
26	pust.004	Case 5	942	0.01753	1.00023	0.00040	0.0047	0.0542
27	pust.004	Case 6	927	0.03107	1.00216	0.00040	0.0047	0.0544
28	pust.004	Case 7	892	0.03107	1.00588	0.00040	0.0047	0.0555
29	pust.004	Case 8	869	0.03107	1.00186	0.00040	0.0047	0.0562
30	pust.004	Case 9	805	0.03107	1.00147	0.00041	0.0047	0.0583
31	pust.004	Case 10	689	0.03107	1.00171	0.00040	0.0047	0.0629
32	pust.004	Case 11	592	0.03107	1.00023	0.00041	0.0047	0.0679
33	pust.004	Case 12	893	0.03107	1.00326	0.00039	0.0047	0.0554
34	pust.004	Case 13	903	0.03416	1.00041	0.00040	0.0047	0.0553
35	pust.006	Case 1	1061	0.03107	1.00133	0.00037	0.0035	0.0521
36	pust.006	Case 2	1018	0.03107	1.00273	0.00038	0.0035	0.0531
37	pust.006	Case 3	940	0.03107	1.00220	0.00038	0.0035	0.0548
38	pust.009	Case 1A	2652	0.02511	1.01585	0.00043	0.0033	0.0413
39	pust.009	Case 2A	2783	0.02511	1.02009	0.00041	0.0033	0.0408
40	pust.009	Case 3A	2807	0.02511	1.01875	0.00040	0.0033	0.0408
Average of All Experiments					1.00474	0.00042	0.00455	
Range		Minimum	91	0.00538	0.99917	0.00037		0.0408
		Maximum	2807	0.04650	1.02009	0.00047		0.3477

[a] All cases from NEA/NSC/DOC(95)03.

[b] Energy corresponding to the average neutron lethargy causing fission (AEF), in units of electronvolts.

NEA/NSC/DOC(95)03, *International Handbook of Evaluated Criticality Safety Benchmark Experiments* [4]

NUREG/CR-5661, *Recommendations for Preparing the Criticality Safety Evaluation of Transportation Packaging for Radioactive Material*, [5] recommends the following general relationship for establishing acceptance criteria for criticality calculations:

$$k_c - \Delta k_u \geq k_{eff} + 2\sigma + \Delta k_m,$$

where:

k_c = k_{eff} resulting from the calculation of benchmark critical experiments using a specific calculational method and data

Δk_u = An allowance for the calculational uncertainty

Δk_m = A required margin of subcriticality (0.05)

k_{eff} = The calculated value obtained from the Monte Carlo analysis for the package or array of packages

σ = The standard deviation of the k_{eff} value obtained from the Monte Carlo analysis.

If the calculational bias β is defined as $\beta = 1 - k_c$, then the bias is positive if $k_c < 1$ and negative if $k_c > 1$. The acceptance relationship may be rewritten as:

$$1.00 - \beta - \Delta k_u \geq k_{eff} + 2\sigma + 0.05, \text{ or}$$

$$k_{eff} + \beta + 2\sigma + \Delta k_u \leq 0.95.$$

To account for the calculational and experimental uncertainty for the benchmark criticals, the mean value of σ_{MCNP} from MCNP for the critical experiments and the experimental uncertainty $\sigma_{experiment}$ ($=\Delta k_u$) are combined in quadrature with the standard deviation (σ) of the k_{eff} value obtained from the MCNP NCT or HAC analysis. This results in the following acceptance relationship:

$$k_{eff} + \beta + 2(\sigma^2 + \sigma^2_{MCNP} + \sigma^2_{experiment})^{0.5} \leq 0.95$$

The statistical summary at the bottom of Table 6-10 is used to obtain the calculational and experimental uncertainties for the benchmark criticals. The bias, β, is conservatively taken to be the maximum for the plutonium experiments, which is 0.00 since all the benchmark experiments are calculated by MCNP to exceed 1.0. Therefore, with the bias and uncertainties, the acceptance criteria is:

$$k_{eff} + 0.00 + 2(\sigma^2 + 0.00092^2 + 0.00479^2)^{0.5} \leq 0.95$$

In a typical MCNP calculation for the 10-160B Cask, the standard deviation (σ_{MCNP}) is less than 0.00025. Therefore, solving for keff yields:

$$k_{eff} \leq 0.95 - [0.00 + 2(\sigma^2 + 0.00092^2 + 0.00479^2)^{0.5}]$$

The k_{eff} from the above equation is 0.94002 for $\sigma = \sigma_{MCNP} = 0.00025$.
The effective criticality limit for this evaluation is set to 0.9400, which assumes that the MCNP calculation is run long enough to obtain a $\sigma_{MCNP} \leq 0.00025$. This means that the MNCP-

calculated k_{eff} values must be less than 0.9400 to demonstrate adequate subcriticality margin after accounting for bias and uncertainties as long as $\sigma_{MCNP} \leq 0.00025$.

6.9 APPENDIX

The appendices to Chapter 6 include a list of references and representative MCNP input listings.

6.9.1 References

1 *Packaging and Transportation of Radioactive Material*, Code of Federal Regulations, Title 10, Part 71, Washington, DC (January 2006)

2. FSWO-QAP-001, *Quality Assurance Procedures*, Procedure QP 3-10, *Software Management*, Energy*Solutions* Federal Services, Inc., Western Operations, Richland, Washington

3. *MCNP—A General Monte Carlo N-Particle Transport Code, Version 5*, LA-UR-03-1987, Release 1.4, Los Alamos National Laboratory, Los Alamos, New Mexico (2003)

4. *International Handbook of Evaluated Criticality Safety Benchmark Experiments*, NEA/NSC/DOC(95)03, September 2002 Edition, *Organization for Economic Co-operation and Development*, Nuclear Energy Agency, Paris, France (2002)

5. *Recommendations for Preparing the Criticality Safety Evaluation of Transportation Packaging for Radioactive Material,* NUREG/CR-5661, U.S. Nuclear Regulatory Commission, Washington, DC (1997)

6. U.S. Department of Energy (DOE), *Remote-Handled Transuranic Waste Authorized Methods for Payload Control* (RH-TRAMPAC), U.S. Department of Energy, Carlsbad Field Office, Carlsbad, New Mexico.

7. Neeley, G. W., D. L. Newell, S. L. Larson, and R. J. Green, *Reactivity Effects of Moderator and Reflector Materials on a Finite Plutonium System*, SAIC-1322-001, Revision 1, Science Applications International Corporation, Oak Ridge, Tennessee, May 2004.

8 WP-8-PT.09, *Test Plan to Determine the TRU Waste Polyethylene Packing Fraction*, Washington TRU Solutions, LLC., Revision 0, June 2003.

6.9.2 Representative MCNP Input Files

NCT Single Cask – f369

```
10-160B
c
3000   139 -0.238656        -2000
                        imp:n=1
3001   169 -0.233058   +2000 +120  -2100 -30
                        imp:n=1
4000   500 -0.00122    +120  -149   -30 +2100
c     4000   901 -0.983047   +120  -149   -30
c     4000   902 -0.985333   +120  -149   -30
c     4000   903 -0.987607   +120  -149   -30
                #(+130  +10   )
                        imp:n=1
c
c  Cask Regions
5     300 -8.03 ((30:-120)(-40 110 -130)):(130 -140 10 -40):
          (10 -20 140 -149):(149 -150 -20)     imp:n=1   $ Liner 11 ga - SS304
10    200 -7.85 (100 -109 -70)                imp:n=1   $ Base-Carbon Steel
15    200 -7.85 (109 -110 -50)                imp:n=1   $ Base-Carbon Steel
20    200 -7.85 (110 -140 40 -50)              imp:n=1   $ Inner Shell-Carbon Steel
25    400 -11.34 (109 -140 50 -60)             imp:n=1   $ Lead wall
30    200 -7.85  (109 -140 60 -70)             imp:n=1   $ steel
40    200 -7.85 (140 -150 20 -70):(150 -160 -70):(160 -170 -25)
                                   imp:n=1 $ Prim/2ndary lid-Carbon Steel
c
c     Water reflector
5000  600 -1.0     (-500 510 -520) (((70:-100) -160):(160 25):170)
                                   imp:n=1 $ 1st 5 cm
5001  600 -1.0     (-501 511 -521) (500:-510:520)  imp:n=0.25 $ Out to 12 inches
5002  0              (501:-511:521)          imp:n=0    $ Outside universe
c
9000  0                   -2001              imp:n=1
c

c  Cask Radial Zones
10      cz      39.0525  $ Lid recess liner
20      cz      39.37    $ Lid recess
25      cz      58.42    $ 2ndary lid
30      cz      86.0425  $ Inner cavity
40      cz      86.36    $ OD Liner (11 ga)
50      cz      89.2175  $ OD Inner shell
60      cz      93.98    $ OD Lead
70      cz      99.06    $ OD Outer shell
```

```
80      cz      99.695   $ OD Thermal barrier-not included in model
c  Cask Axial Zones
100     pz      0.0001   $ Bottom cask
109     pz      11.43    $ Bottom lead in side wall
110     pz      13.97    $ Base plate
120     pz      14.2875  $ Bottom liner
125     pz      174.32655  $ Top of mixture for H/D=0.93
130     pz      209.2325 $ Cavity hgt
140     pz      209.55   $ Top liner
149     pz      216.8525 $ Lid recess liner
150     pz      217.17   $ Top of lid recess
160     pz      223.52   $ Primary lid
170     pz      231.14   $ Top of 2nd lid
c
c Planes for water reflector - 1st 5 cm and out to 12 inches
c
500     cz   104.06
501     cz   129.54
510     pz  -5
511     pz  -30.48
520     pz   236.14
521     pz   261.62
c
1000   so   1000          $ beyond problem
c
2000   s    61.948    0.000     38.382    23.994894
2001   s    61.948    0.000     38.382    19.0
2002   s    61.948    0.000     38.382    79.210227
c
2100  pz 103.79361
c

c
mode n
kcode   4000 0.9   50  4000
sdef   x=d1   y=d2   z=d3    ccc=9000 eff=0.00001
c     ksrc    0   0  120
c
si1    -19.0     86.1
sp1      0        1
c
si2    -19.0     19.0
sp2      0        1
c
si3     14.0    210.0
sp3      0        1
```

```
c
c Material Definitions
c
c
c    H/Pu    1400
c    H2O/CH2    0.0000000
c    Be w%    1.000000%    of CH2 + Pu
c    Radius    23.994894    cm
c    Pu-239 Mass    325.000000    g
c    Density    0.238656    g/cc
c     0.000    0.000    120.000    23.99489        Center
c     0.000    0.000     38.382    23.99489        Bottom
c    61.948    0.000     38.382    23.99489        Lower Corner
c    61.948    0.000    185.138    23.99489        Upper Corner
c
m139    1001.66c    -0.13886897    $    H-1
       1002.66c    -0.00004163    $    H-2
       4009.66c    -0.00990099    $    Be-nat
       6000.66c    -0.82765605    $    C-nat
c       8016.66c    0.00000000    $    O-16 & O-18
c       8017.66c    0.00000000    $    O-17
      94239.66c    -0.02353235    $    Pu-239
mt139   poly.60t    be.60t
c
c
c    H2O/CH2    0.000
c    Be w%    1.00%    of CH2
c    Density    0.104514    g/cc    Full Vessel
c    Density    0.233058        Sphere Reflector
c    Radius    79.210227        Sphere Reflector
c    Height    0.000000
c
m169    1001.66c    -0.14224992    $    H-1
       1002.66c    -0.00004265    $    H-2
       4009.66c    -0.00990099    $    Be-nat
       6000.66c    -0.84780644    $    C-nat
c       8016.66c    0.00000000    $    O-16 & O-18
c       8017.66c    0.00000000    $    O-17
mt169   poly.60t    be.60t
c
c
c
c     Carbon Steel
c    Density    7.85        g/cc
c
m200   6000.66c    -0.003000        $ C-nat
```

```
    14028.66c   -0.002572      $ Si-28
    14029.66c   -0.000135      $ Si-29
    14030.66c   -0.000092      $ Si-30
    15031.66c   -0.000400      $ P-31
    16000.66c   -0.000500      $ S-nat
    25055.66c   -0.010300      $ Mn-55
    26054.66c   -0.055383      $ Fe-54
    26056.66c   -0.901554      $ Fe-56
    26057.66c   -0.021193      $ Fe-57
    26058.66c   -0.002870      $ Fe-58
    29063.66c   -0.001370      $ Cu-63
    29065.66c   -0.000630      $ Cu-65
c
c    SS-304 - from STDNEUT.dos file
c   Density   8.03      g/cc
c
m300   6000.66c   -0.000300      $ C-nat
    24050.66c   -0.008345      $ Cr-50
    24052.66c   -0.167349      $ Cr-52
    24053.66c   -0.019341      $ Cr-53
    24054.66c   -0.004905      $ Cr-54
    25055.66c   -0.019994      $ Mn-55
    26054.66c   -0.038378      $ Fe-54
    26056.66c   -0.624743      $ Fe-56
    26057.66c   -0.014686      $ Fe-57
    26058.66c   -0.001989      $ Fe-58
    28058.66c   -0.067178      $ Ni-58
    28060.66c   -0.026768      $ Ni-60
    28061.66c   -0.001183      $ Ni-61
    28062.66c   -0.003834      $ Ni-62
    28064.66c   -0.001008      $ Ni-64
c
c    Lead
c   Density   11.34      g/cc
c
m400  82000.50c   -1.0          $ Lead
c
c    Air
m500   7014.66c   -0.761985      $ N-14
     7015.66c   -0.003015      $ N-15
     8016.66c   -0.234905      $ O-16 & O-18
     8017.66c   -0.000095      $ O-17
c
c   Water
c   Density   1.00      g/cc
c
```

```
m600    1001.66c    -0.11186481    $    H-1
      1002.66c    -0.00003354    $    H-2
      8016.66c    -0.88774309    $    O-16 & O-18
      8017.66c    -0.00035857    $    O-17
mt600   lwtr.60t
c
c
c      Be       1.85       g/cc
c
m800    4009.66c    -0.00497513    $    Be-nat
mt800   be.60t
c
print
```

HAC Single Cask – f033

```
10-160B
c
3000   103 -1.011186        -2000
                        imp:n=1
4000   153 -0.991739   +120  -149   -30
                 +2000
               #(+130  +10   )
                        imp:n=1
c
c  Cask Regions
5     300 -8.03 ((30:-120)(-40 110 -130)):(130 -140 10 -40):
           (10 -20 140 -149):(149 -150 -20)     imp:n=1   $ Liner 11 ga - SS304
10    200 -7.85 (100 -109 -70)                  imp:n=1   $ Base-Carbon Steel
15    200 -7.85 (109 -110 -50)                  imp:n=1   $ Base-Carbon Steel
20    200 -7.85 (110 -140 40 -50)                imp:n=1   $ Inner Shell-Carbon Steel
25    400 -11.34 (109 -140 50 -60)               imp:n=1   $ Lead wall
30    200 -7.85  (109 -140 60 -70)               imp:n=1   $ steel
40    200 -7.85 (140 -150 20 -70):(150 -160 -70):(160 -170 -25)
                                     imp:n=1 $ Prim/2ndary lid-Carbon Steel
c
c     Water reflector
5000  600 -1.0 (-500 510 -520) (((70:-100) -160):(160 25):170)
                                     imp:n=1 $ 1st 5 cm
5001  600 -1.0 (-501 511 -521) (500:-510:520)      imp:n=0.25 $ Out to 12 inches
5002  0                (501:-511:521)          imp:n=0    $ Outside universe
c
9000  0                    -2001              imp:n=1
c

c  Cask Radial Zones
10      cz      39.0525  $ Lid recess liner
20      cz      39.37    $ Lid recess
25      cz      58.42    $ 2ndary lid
30      cz      86.0425  $ Inner cavity
40      cz      86.36    $ OD Liner (11 ga)
50      cz      89.2175  $ OD Inner shell
60      cz      93.98    $ OD Lead
70      cz      99.06    $ OD Outer shell
80      cz      99.695   $ OD Thermal barrier-not included in model
c  Cask Axial Zones
100     pz      0.0001   $ Bottom cask
109     pz      11.43    $ Bottom lead in side wall
110     pz      13.97    $ Base plate
120     pz      14.2875  $ Bottom liner
```

```
125     pz      174.32655  $ Top of mixture for H/D=0.93
130     pz      209.2325 $ Cavity hgt
140     pz      209.55   $ Top liner
149     pz      216.8525 $ Lid recess liner
150     pz      217.17   $ Top of lid recess
160     pz      223.52   $ Primary lid
170     pz      231.14   $ Top of 2nd lid
c
c Planes for water reflector - 1st 5 cm and out to 12 inches
c
500     cz   104.06
501     cz   129.54
510     pz  -5
511     pz  -30.48
520     pz   236.14
521     pz   261.62
c
1000   so   1000          $ beyond problem
c
2000   s  72.331    0.000    195.521    13.611761
2001   s  72.331    0.000    195.521    12.5
c

c
mode n
kcode   4000 0.9   50  4000
sdef   x=d1   y=d2   z=d3    ccc=9000 eff=0.00001
c     ksrc    0   0  120
c
si1    -12.5     86.1
sp1      0        1
c
si2    -12.5     12.5
sp2      0        1
c
si3     14.0    210.0
sp3      0        1
c
c Material Definitions
c
c
c    H/Pu    900
c    H2O/CH2    3.245
c    Be w%    1.00000%    of CH2 + Pu
c    Radius    13.611761    cm
c    Pu-239 Mass    325.0000    g
```

```
c    Density    1.011186    g/cc
c     0.000    0.000    120.000    13.611761        Center
c     0.000    0.000     27.999    13.611761        Bottom
c    72.331    0.000     27.999    13.611761        Lower Corner
c    72.331    0.000    195.521    13.611761        Upper Corner
c
m103    1001.66c    -0.11541840    $    H-1
       1002.66c    -0.00003460    $    H-2
       4009.66c    -0.00258227    $    Be-nat
       6000.66c    -0.19506425    $    C-nat
       8016.66c    -0.65621111    $    O-16 & O-18
       8017.66c    -0.00026505    $    O-17
      94239.66c    -0.03042431    $    Pu-239
mt103   lwtr.60t    be.60t
c
c
c    H2O/CH2    8.453226
c    Be w%    1.00000%    of CH2
c    Density    0.991739    g/cc
c
m153    1001.66c    -0.11510778    $    H-1
       1002.66c    -0.00003451    $    H-2
       4009.66c    -0.00105672    $    Be-nat
       6000.66c    -0.09048548    $    C-nat
       8016.66c    -0.79299521    $    O-16 & O-18
       8017.66c    -0.00032030    $    O-17
mt153   lwtr.60t    be.60t
c
c
c
c     Carbon Steel
c    Density    7.85        g/cc
c
m200   6000.66c    -0.003000        $ C-nat
     14028.66c    -0.002572        $ Si-28
     14029.66c    -0.000135        $ Si-29
     14030.66c    -0.000092        $ Si-30
     15031.66c    -0.000400        $ P-31
     16000.66c    -0.000500        $ S-nat
     25055.66c    -0.010300        $ Mn-55
     26054.66c    -0.055383        $ Fe-54
     26056.66c    -0.901554        $ Fe-56
     26057.66c    -0.021193        $ Fe-57
     26058.66c    -0.002870        $ Fe-58
     29063.66c    -0.001370        $ Cu-63
     29065.66c    -0.000630        $ Cu-65
```

```
c
c    SS-304 - from STDNEUT.dos file
c   Density   8.03       g/cc
c
m300   6000.66c    -0.000300       $ C-nat
     24050.66c    -0.008345       $ Cr-50
     24052.66c    -0.167349       $ Cr-52
     24053.66c    -0.019341       $ Cr-53
     24054.66c    -0.004905       $ Cr-54
     25055.66c    -0.019994       $ Mn-55
     26054.66c    -0.038378       $ Fe-54
     26056.66c    -0.624743       $ Fe-56
     26057.66c    -0.014686       $ Fe-57
     26058.66c    -0.001989       $ Fe-58
     28058.66c    -0.067178       $ Ni-58
     28060.66c    -0.026768       $ Ni-60
     28061.66c    -0.001183       $ Ni-61
     28062.66c    -0.003834       $ Ni-62
     28064.66c    -0.001008       $ Ni-64
c
c    Lead
c   Density   11.34       g/cc
c
m400  82000.50c    -1.0            $ Lead
c
c    Air
m500   7014.66c    -0.761985       $ N-14
      7015.66c    -0.003015       $ N-15
      8016.66c    -0.234905       $ O-16 & O-18
      8017.66c    -0.000095       $ O-17
c
c   Water
c   Density    1.00       g/cc
c
m600    1001.66c    -0.11186481    $    H-1
       1002.66c    -0.00003354    $    H-2
       8016.66c    -0.88774309    $    O-16 & O-18
       8017.66c    -0.00035857    $    O-17
mt600   lwtr.60t
c
c
c      Be       1.85       g/cc
c
m800    4009.66c    -0.00497513    $    Be-nat
mt800   be.60t
c
```

print

NCT Infinite Array – f369a

```
10-160B
c
3000   139 -0.238656        -2000
                        imp:n=1
3001   169 -0.233058   +2000 +120  -2100 -30
                        imp:n=1
4000   500 -0.00122    +120  -149   -30 +2100
c     4000   901 -0.983047   +120  -149   -30
c     4000   902 -0.985333   +120  -149   -30
c     4000   903 -0.987607   +120  -149   -30
                #(+130  +10   )
                        imp:n=1
c
c  Cask Regions
5     300 -8.03 ((30:-120)(-40 110 -130)):(130 -140 10 -40):
            (10 -20 140 -149):(149 -150 -20)     imp:n=1   $ Liner 11 ga - SS304
10    200 -7.85 (100 -109 -70)                   imp:n=1   $ Base-Carbon Steel
15    200 -7.85 (109 -110 -50)                   imp:n=1   $ Base-Carbon Steel
20    200 -7.85 (110 -140 40 -50)                imp:n=1   $ Inner Shell-Carbon Steel
25    400 -11.34 (109 -140 50 -60)               imp:n=1   $ Lead wall
30    200 -7.85  (109 -140 60 -70)               imp:n=1   $ steel
40    200 -7.85 (140 -150 20 -70):(150 -160 -70):(160 -170 -25)
                                        imp:n=1 $ Prim/2ndary lid-Carbon Steel
c
c     Around cask, interspersed
201    0        (-503 504 -508 507 -505 506 501 -502)
                (((70:-100) -160):(160 25):170) imp:n=1
c     Outside World
200    0      (503:-504:508:-507:505:-506:-501:502) imp:n=0
c
c
9000  0                    -2001              imp:n=1
c

c  Cask Radial Zones
10      cz      39.0525  $ Lid recess liner
20      cz      39.37    $ Lid recess
25      cz      58.42    $ 2ndary lid
30      cz      86.0425  $ Inner cavity
40      cz      86.36    $ OD Liner (11 ga)
50      cz      89.2175  $ OD Inner shell
60      cz      93.98    $ OD Lead
70      cz      99.06    $ OD Outer shell
80      cz      99.695   $ OD Thermal barrier-not included in model
```

```
c  Cask Axial Zones
100     pz      0.0001   $ Bottom cask
109     pz      11.43    $ Bottom lead in side wall
110     pz      13.97    $ Base plate
120     pz      14.2875  $ Bottom liner
125     pz      174.32655  $ Top of mixture for H/D=0.93
130     pz      209.2325 $ Cavity hgt
140     pz      209.55   $ Top liner
149     pz      216.8525 $ Lid recess liner
150     pz      217.17   $ Top of lid recess
160     pz      223.52   $ Primary lid
170     pz      231.14   $ Top of 2nd lid
c
c     Hexagonal Cell Surrounding Cask for Infinite array
c
c       inner hex surfaces bounding lattice, (n-0.5)*p*cos30
c     surfaces for outer hexagonal duct
*501        pz      -1.000  $
*502        pz     232.140  $
*503        px     100.0000
*504        px    -100.0000
*505         p    -1.0000000      1.7320508      0.0000000     200.0000
*506         p    -1.0000000      1.7320508      0.0000000    -200.0000
*507         p     1.0000000      1.7320508      0.0000000    -200.0000
*508         p     1.0000000      1.7320508      0.0000000     200.0000
c
1000   so   1000          $ beyond problem
c
2000   s    61.948    0.000     38.382    23.994894
2001   s    61.948    0.000     38.382    19.0
2002   s    61.948    0.000     38.382    79.210227
c
2100  pz 103.79361
c

c
mode n
kcode   4000 0.9   50  4000
sdef   x=d1   y=d2   z=d3    ccc=9000 eff=0.00001
c     ksrc    0   0  120
c
si1    -19.0     86.1
sp1      0        1
c
si2    -19.0     19.0
sp2      0        1
```

```
c
si3     14.0    210.0
sp3      0       1
c
c Material Definitions
c
c
c    H/Pu    1400
c    H2O/CH2    0.0000000
c    Be w%    1.000000%    of CH2 + Pu
c    Radius    23.994894    cm
c    Pu-239 Mass    325.000000    g
c    Density    0.238656    g/cc
c     0.000    0.000    120.000    23.99489        Center
c     0.000    0.000     38.382    23.99489        Bottom
c    61.948    0.000     38.382    23.99489        Lower Corner
c    61.948    0.000    185.138    23.99489        Upper Corner
c
m139    1001.66c    -0.13886897    $    H-1
       1002.66c    -0.00004163    $    H-2
       4009.66c    -0.00990099    $    Be-nat
       6000.66c    -0.82765605    $    C-nat
c       8016.66c    0.00000000    $    O-16 & O-18
c       8017.66c    0.00000000    $    O-17
      94239.66c    -0.02353235    $    Pu-239
mt139   poly.60t    be.60t
c
c
c    H2O/CH2    0.000
c    Be w%    1.00%    of CH2
c    Density    0.104514    g/cc    Full Vessel
c    Density    0.233058        Sphere Reflector
c    Radius    79.210227        Sphere Reflector
c    Height    0.000000
c
m169    1001.66c    -0.14224992    $    H-1
       1002.66c    -0.00004265    $    H-2
       4009.66c    -0.00990099    $    Be-nat
       6000.66c    -0.84780644    $    C-nat
c       8016.66c    0.00000000    $    O-16 & O-18
c       8017.66c    0.00000000    $    O-17
mt169   poly.60t    be.60t
c
c
c
c     Carbon Steel
```

```
c   Density   7.85      g/cc
c
m200   6000.66c   -0.003000      $ C-nat
     14028.66c   -0.002572      $ Si-28
     14029.66c   -0.000135      $ Si-29
     14030.66c   -0.000092      $ Si-30
     15031.66c   -0.000400      $ P-31
     16000.66c   -0.000500      $ S-nat
     25055.66c   -0.010300      $ Mn-55
     26054.66c   -0.055383      $ Fe-54
     26056.66c   -0.901554      $ Fe-56
     26057.66c   -0.021193      $ Fe-57
     26058.66c   -0.002870      $ Fe-58
     29063.66c   -0.001370      $ Cu-63
     29065.66c   -0.000630      $ Cu-65
c
c    SS-304 - from STDNEUT.dos file
c   Density   8.03      g/cc
c
m300   6000.66c   -0.000300      $ C-nat
     24050.66c   -0.008345      $ Cr-50
     24052.66c   -0.167349      $ Cr-52
     24053.66c   -0.019341      $ Cr-53
     24054.66c   -0.004905      $ Cr-54
     25055.66c   -0.019994      $ Mn-55
     26054.66c   -0.038378      $ Fe-54
     26056.66c   -0.624743      $ Fe-56
     26057.66c   -0.014686      $ Fe-57
     26058.66c   -0.001989      $ Fe-58
     28058.66c   -0.067178      $ Ni-58
     28060.66c   -0.026768      $ Ni-60
     28061.66c   -0.001183      $ Ni-61
     28062.66c   -0.003834      $ Ni-62
     28064.66c   -0.001008      $ Ni-64
c
c    Lead
c   Density   11.34      g/cc
c
m400  82000.50c   -1.0          $ Lead
c
c    Air
m500   7014.66c   -0.761985      $ N-14
     7015.66c   -0.003015      $ N-15
     8016.66c   -0.234905      $ O-16 & O-18
     8017.66c   -0.000095      $ O-17
c
```

```
c    Water
c    Density    1.00       g/cc
c
m600    1001.66c    -0.11186481    $    H-1
        1002.66c    -0.00003354    $    H-2
        8016.66c    -0.88774309    $    O-16 & O-18
        8017.66c    -0.00035857    $    O-17
mt600   lwtr.60t
c
c
c       Be       1.85       g/cc
c
m800    4009.66c    -0.00497513    $    Be-nat
mt800   be.60t
c
print
```

HAC Infinite Array – f022flat02

```
10-160B
c
3000   102 -1.012911        -2000
                        imp:n=1
4000   152 -0.991738   +120  -149   -30
                 +2000
               #(+130  +10   )
                        imp:n=1
c
c  Cask Regions
5     300 -8.03 ((30:-120)(-40 110 -130)):(130 -140 10 -40):
           (10 -20 140 -149):(149 -150 -20)     imp:n=1   $ Liner 11 ga - SS304
10    200 -7.85 (100 -109 -70)                  imp:n=1   $ Base-Carbon Steel
15    200 -7.85 (109 -110 -50)                  imp:n=1   $ Base-Carbon Steel
20    200 -7.85 (110 -140 40 -50)                imp:n=1   $ Inner Shell-Carbon Steel
25    400 -11.34 (109 -140 50 -60)               imp:n=1   $ Lead wall
30    200 -7.85  (109 -140 60 -70)               imp:n=1   $ steel
40    200 -7.85 (140 -150 20 -70):(150 -160 -70):(160 -170 -25)
                                      imp:n=1 $ Prim/2ndary lid-Carbon Steel
c
c
c     Around cask, interspersed
201   600 -0.0010   (-503 504 -508 507 -505 506 501 -502)
                (((70:-100) -160):(160 25):170) imp:n=1
c     Outside World
200    0      (503:-504:508:-507:505:-506:-501:502) imp:n=0
c
9000  0                    -2001              imp:n=1
c

c  Cask Radial Zones
10      cz      39.0525  $ Lid recess liner
20      cz      39.37    $ Lid recess
25      cz      58.42    $ 2ndary lid
30      cz      86.0425  $ Inner cavity
40      cz      86.36    $ OD Liner (11 ga)
50      cz      89.2175  $ OD Inner shell
60      cz      93.98    $ OD Lead
70      cz      99.06    $ OD Outer shell
80      cz      99.695   $ OD Thermal barrier-not included in model
c  Cask Axial Zones
100     pz      0.0001   $ Bottom cask
109     pz      11.43    $ Bottom lead in side wall
```

```
110     pz      13.97    $ Base plate
120     pz      14.2875  $ Bottom liner
125     pz      174.32655  $ Top of mixture for H/D=0.93
130     pz      209.2325 $ Cavity hgt
140     pz      209.55   $ Top liner
149     pz      216.8525 $ Lid recess liner
150     pz      217.17   $ Top of lid recess
160     pz      223.52   $ Primary lid
170     pz      231.14   $ Top of 2nd lid
c
c     Hexagonal Cell Surrounding Cask for Infinite array
c
c       inner hex surfaces bounding lattice, (n-0.5)*p*cos30
c     surfaces for outer hexagonal duct
*501        pz      -1.000  $
*502        pz     232.140  $
*503        px     100.0000
*504        px    -100.0000
*505         p    -1.0000000      1.7320508      0.0000000     200.0000
*506         p    -1.0000000      1.7320508      0.0000000    -200.0000
*507         p     1.0000000      1.7320508      0.0000000    -200.0000
*508         p     1.0000000      1.7320508      0.0000000     200.0000
c
1000   so   1000          $ beyond problem
c
2000   s  72.587    0.000     27.743    13.355327
2001   s  72.587    0.000     27.743    12.5
c

c
mode n
kcode   4000 0.9   50  4000
sdef   x=d1   y=d2   z=d3    ccc=9000 eff=0.00001
c     ksrc    0   0  120
c
si1    -12.5     86.1
sp1      0        1
c
si2    -12.5     12.5
sp2      0        1
c
si3     14.0    210.0
sp3      0        1
c
c Material Definitions
```

```
c
c
c    H/Pu    850
c    H2O/CH2    3.245
c    Be w%    1.00000%    of CH2 + Pu
c    Radius    13.355327    cm
c    Pu-239 Mass    325.0000    g
c    Density    1.012911    g/cc
c     0.000    0.000    120.000    13.355327
c     0.000    0.000     27.743    13.355327
c    72.587    0.000     27.743    13.355327
c    72.587    0.000    195.778    13.355327
c
m102    1001.66c    -0.11521015    $    H-1
       1002.66c    -0.00003454    $    H-2
       4009.66c    -0.00259548    $    Be-nat
       6000.66c    -0.19471229    $    C-nat
       8016.66c    -0.65502711    $    O-16 & O-18
       8017.66c    -0.00026457    $    O-17
      94239.66c    -0.03215585    $    Pu-239
mt102   lwtr.60t    be.60t
c
c
c    H2O/CH2    8.451753
c    Be w%    1.00000%    of CH2
c    Density    0.991738    g/cc
c
m152    1001.66c    -0.11510828    $    H-1
       1002.66c    -0.00003451    $    H-2
       4009.66c    -0.00105689    $    Be-nat
       6000.66c    -0.09049956    $    C-nat
       8016.66c    -0.79298046    $    O-16 & O-18
       8017.66c    -0.00032029    $    O-17
mt152   lwtr.60t    be.60t
c
c
c
c     Carbon Steel
c    Density    7.85        g/cc
c
m200   6000.66c    -0.003000        $ C-nat
     14028.66c    -0.002572        $ Si-28
     14029.66c    -0.000135        $ Si-29
     14030.66c    -0.000092        $ Si-30
     15031.66c    -0.000400        $ P-31
```

```
    16000.66c   -0.000500      $ S-nat
    25055.66c   -0.010300      $ Mn-55
    26054.66c   -0.055383      $ Fe-54
    26056.66c   -0.901554      $ Fe-56
    26057.66c   -0.021193      $ Fe-57
    26058.66c   -0.002870      $ Fe-58
    29063.66c   -0.001370      $ Cu-63
    29065.66c   -0.000630      $ Cu-65
c
c    SS-304 - from STDNEUT.dos file
c   Density   8.03      g/cc
c
m300   6000.66c   -0.000300      $ C-nat
    24050.66c   -0.008345      $ Cr-50
    24052.66c   -0.167349      $ Cr-52
    24053.66c   -0.019341      $ Cr-53
    24054.66c   -0.004905      $ Cr-54
    25055.66c   -0.019994      $ Mn-55
    26054.66c   -0.038378      $ Fe-54
    26056.66c   -0.624743      $ Fe-56
    26057.66c   -0.014686      $ Fe-57
    26058.66c   -0.001989      $ Fe-58
    28058.66c   -0.067178      $ Ni-58
    28060.66c   -0.026768      $ Ni-60
    28061.66c   -0.001183      $ Ni-61
    28062.66c   -0.003834      $ Ni-62
    28064.66c   -0.001008      $ Ni-64
c
c    Lead
c   Density   11.34      g/cc
c
m400  82000.50c   -1.0          $ Lead
c
c    Air
m500   7014.66c   -0.761985      $ N-14
     7015.66c   -0.003015      $ N-15
     8016.66c   -0.234905      $ O-16 & O-18
     8017.66c   -0.000095      $ O-17
c
c   Water
c   Density   1.00      g/cc
c
m600   1001.66c   -0.11186481   $   H-1
     1002.66c   -0.00003354   $   H-2
     8016.66c   -0.88774309   $   O-16 & O-18
```

```
     8017.66c    -0.00035857    $    O-17
mt600   lwtr.60t
c
c
c      Be       1.85       g/cc
c
m800    4009.66c    -0.00497513    $    Be-nat
mt800   be.60t
c
print
```

7.0 OPERATING PROCEDURE

This chapter describes the general procedure for loading and unloading of the 10-160B cask.

An optional steel insert may be used to shield the contents of the cask. The appropriate thickness of insert that should be used is determined from calculations and experience with previous, similar shipments. However, the insert must be thick enough so that dose rates on the exterior of the cask do not exceed the limits of 10 CFR 71.47, but must be no thicker than the maximum permissible size described in section 1.0.

The maximum permissible payload of the cask is 14,500 pounds, including contents, secondary containers, shoring, and optional steel insert (if used).

For contents that could radiolytically generate combustible gases, the criteria of Section 4.8 must be addressed. For DOE TRU waste, compliance with the 5% hydrogen concentration limit shall be demonstrated by the methods discussed in Appendix 4.10.2. for other contents, which exceed the 5% concentration limit, the procedures in Section 7.4 can be used to satisfy the criteria of Section 4.8.

7.1 Procedure for Loading the Package

7.1.1 Determine if cask must be removed from trailer for loading purposes. To remove cask from trailer:

7.1.1.1 Loosen and disconnect ratchet binders from upper impact limiter.

7.1.1.2 Using suitable lifting equipment, remove upper impact limiter. Care should be taken to prevent damage to impact limiter during handling and storage.

7.1.1.3 Disconnect cask to trailer tie-down equipment.

7.1.1.4 Attach cask lifting ears and torque bolts to 200 ft-lbs $\pm$ 20 ft-lbs lubricated.

7.1.1.5 Using suitable lifting equipment, remove cask from trailer and lower impact limiter and place cask in level loading position.

NOTE **THE CABLES USED FOR LIFTING THE CASK MUST HAVE A TRUE ANGLE, WITH RESPECT TO THE HORIZONTAL OF NOT LESS THAN 60°.**

7.1.2 Loosen and remove the twenty-four bolts (24, 1¾" – 8 UN) which secure the primary lid to cask body.

7.1.3 Remove primary lid from cask body using suitable lifting equipment and the three lifting lugs on the secondary lid. Care should be taken during lid handling operations to prevent damage to cask or lid seal surfaces.

NOTE **THE CABLES USED FOR LIFTING THE LID MUST HAVE A TRUE ANGLE, WITH RESPECT TO THE HORIZONTAL OF NOT LESS THAN 45°.**

NOTE **IN CERTAIN CIRCUMSTANCES, LOADING MAY BE ACCOMPLISHED THROUGH THE SECONDARY LID AND THE PRIMARY LID WILL REMAIN ON. IN THIS CASE, THE FOLLOWING ALTERNATE (A) STEPS WILL BE USED:**

7.1.1.A (ALTERNATE) REMOVE THE IMPACT LIMITER CENTER COVER PLATE. THIS WILL PROVIDE ACCESS TO THE SECONDARY LID AND LIFTING LUGS.

7.1.2.A (ALTERNATE) WORKING THROUGH THE CENTER HOLE IN THE UPPER IMPACT LIMITER, LOOSEN AND REMOVE THE 12 1¾" – 8 UN LID BOLTS WHICH SECURE THE SECONDARY LID TO THE PRIMARY LID.

7.1.3.A (ALTERNATE) REMOVE THE SECONDARY LID USING SUITABLE LIFTING EQUIPMENT AND THE THREE LUGS ON THE LID. CARE SHOULD BE TAKEN DURING LID HANDLING

OPERATIONS TO PREVENT DAMAGES TO SEAL SURFACES OR THE LID

7.1.4 Visually inspect accessible areas of the cask interior for damage, loose materials, or moisture. Clean and inspect seal surfaces. Replace seals when defects or damage is noted which may preclude proper sealing.

NOTE **RADIOACTIVELY CONTAMINATED LIQUIDS MAY BE PUMPED OUT, REMOVED BY USE OF AN ABSORBENT MATERIAL, OR VIA DRAIN LINE. REMOVAL OF ANY MATERIAL FLOW INSIDE THE CASK SHALL BE PERFORMED UNDER THE SUPERVISION OF QUALIFIED HEALTH PHYSICS (HP) PERSONNEL WITH THE NECESSARY HP MONITORING AND RADIOLOGICAL HEALTH SAFETY PRECAUTIONS AND SAFEGUARDS.**

NOTE **WHEN SEALS ARE REPLACED (INCLUDING SEALS ON THE OPTIONAL VENT AND DRAIN PORTS), LEAK TESTING IS REQUIRED AS SPECIFIED IN SECTION 8.2.2.1.**

7.1.5 Check the torques on the cavity vent and drain line cap screws to determine that the cap screws are properly installed using O-rings. This step is not required if the cask does not have the optional vent and drain lines, or if the tamper seals on the vent or drain lines have not been removed. Torque the cap screws to 20 ± 2 ft-lbs.

7.1.6 Place radwaste material, disposable liners, drums, or other containers into cask and install shoring or bracing, if necessary to restrict movement of contents during transport.

7.1.7 Clean and inspect lid seal surfaces.

7.1.8 Replace the primary lid and secure the lid to the cask body by installing the 24 lid bolts. Ensure that the lid orientation stripe is in alignment with the cask stripe. Torque bolts to 300 ± 30 ft-lbs.

7.1.8.A (Alternate) Replace secondary lid (if removed) and secure to the primary lid with 12 bolts. Ensure that the lid orientation stripe is in alignment with the stripe on the primary lid. Torque the bolts to 300 ± 30 ft-lbs.

<u>NOTE</u> **PERFORM PRESSURE DROP LEAK TEST OF THE CASK PRIMARY LID, SECONDARY LID, VENT LINE, OR DRAIN LINE (AS APPLICABLE) IN ACCORDANCE WITH SECTION 8.2.2.2 PRIOR TO SHIPMENT OF PACKAGE LOADED WITH LARGE QUANTITIES OF LSA MATERIALS OR TYPE B QUANTITIES OF NON-LSA MATERIAL.**

7.1.9 Install anti-tamper seals to the designated lid bolts, or to vent and/or drain line plugs (if applicable).

7.1.10 If cask has been removed from trailer, proceed as follows to return cask to trailer:

7.1.10.1 Using suitable lifting equipment, lift and position cask into lower impact limiter on trailer in the same orientation as removed.

7.1.10.2 Unbolt and remove cask lifting ears.

7.1.10.3 Reconnect cask to trailer using tie-down equipment.

7.1.11 Using suitable lifting equipment, lift, inspect for damage and install upper impact limiter on cask in the same orientation as removed.

7.1.12 Attach and hand tighten ratchet binders between upper and lower impact limiters.

7.1.13 Cover lift lugs as required.

7.1.14 Install anti-tamper seals to the designated ratchet binder.

7.1.15 Replace center plate on the upper impact limiter.

7.1.16 Inspect package for proper placards and labeling.

7.1.17 Complete required shipping documentation.

7.1.18 Prior to shipment of a loaded package the following shall be confirmed:

(a) That the licensee who expects to receive the package containing materials in excess of Type A quantities specified in 10 CFR 20.1906(b) meets and follows the requirements of 10 CFR 20.1906 as applicable.

(b) That trailer placarding and cask labeling meet DOT specifications (49 CRF 172).

(c) That all radiation and surface contamination levels are within the limits of the applicable federal regulations.

(d) That all anti-tamper seals are properly installed.

7.2 Procedure for Unloading Package

In addition to the following sequence of events for unloading a package, packages containing quantities of radioactive material in excess of Type A quantities specified in 10 CFR 20.1906(b) shall be received, monitored, and handled by the licensee receiving the package in accordance with the requirements of 10 CFR 20.1906 as applicable.

7.2.1 Move the unopened package to an appropriate level unloading area.

7.2.2 Perform an external examination of the unopened package. Record any significant observations.

7.2.3 Remove anti-tamper seals.

7.2.4 Loosen and disconnect ratchet binders from the upper overpack assembly.

7.2.5 Remove upper overpack assembly using caution not to damage the cask or overpack assembly.

7.2.6 If cask must be removed from trailer, refer to Step 7.1.1.

7.2.7 (Optional if vent port installed). Vent cask cavity removing plugs from the vent line.

7.2.8 Loosen and remove the twenty-four (24) 1¾" – 8 UN primary lid bolts.

7.2.9 Using suitable lifting equipment, lift lid from cask using care during handling operations to prevent damage to cask and lid seal surfaces.

NOTE: THE CABLES USED FOR LIFTING THE LID MUST HAVE A TRUE ANGLE WITH RESPECT TO THE HORIZONTAL OF NOT LESS THAN 45°.

7.2.10 Remove contents to disposal area.

NOTE: RADIOACTIVELY CONTAMINATED LIQUIDS MAY BE PUMPED OUT, REMOVED BY USE OF AN ABSORBENT MATERIAL, OR VIA DRAIN LINE. REMOVAL OF ANY MATERIAL FROM INSIDE THE CASK SHALL BE PERFORMED UNDER THE SUPERVISION OF QUALIFIED HEALTH PHYSICS (HP) PERSONNEL WITH THE NECESSARY HP MONITORING AND RADIOLOGICAL HEALTH SAFETY PRECAUTIONS AND SAFEGUARDS.

7.2.11 Assemble package in accordance with loading procedure (7.1.7 through 7.1.17).

7.3 Preparation of Empty Packages for Transport

The Model 10-160B cask requires no special transport preparation when empty. Loading and unloading procedures outlined in this chapter shall be followed as applicable for empty packages. The requirements of 49 CFR 173.428 shall be complied with.

NOTE: EACH PACKAGE USER WILL BE SUPPLIED WITH A COMPLETE DETAILED OPERATING PROCEDURE FOR USE WITH THE PACKAGE.

7.4 Procedures for Shipment of Packages Which Generate Combustible Gases

Procedures for preparing packages for shipment which radiolytically generate combustible gases are outlined below. These procedures are divided into two categories:

a. Combustible gas control by inerting, and

b. Combustible gas suppression.

7.4.1 Combustible Gas Control by Inerting

7.4.1.1 Dewater the secondary container. The bulk of the free water is removed from the secondary container by displacing the water with nitrogen gas.

7.4.1.2 Inert the secondary container (and, if necessary, the cask). The inerting operation is done at the dewatering station just before the cask is loaded. Inerting is performed if the hydrogen generated will be greater than 5% in any portion of the package for a time period that is twice the expected shipping time. Inerting is intended to limit the oxygen concentration to less than 5% including any oxygen that is radiolytically generated over the same period considered for hydrogen generation. If a leak path can develop

between the secondary container and the cask, the cask will also be inerted.

7.4.1.3 Inerting of the secondary container and / or the cask cavity, to achieve an oxygen concentration of less than 5%, can be performed per the following:

- Connect a nitrogen supply.
- Pressurize with nitrogen to 15 ±1 psig. for fifteen minutes.
- Depressurize to ~ 0 psig.
- Repeat this pressurization / depressurization cycle two more times

7.4.2 Combustible Gas Suppression

7.4.2.1 Dewater the secondary container. See paragraph 7.4.1.1.

7.4.2.2 Install the previously qualified* combustible gas suppression system (e.g., a vapor pressure catalytic recombiner).

*Previous qualification means that the catalytic recombiner design to be used has been tested for a period of twice the expected shipping time under conditions expected in transport and has proven satisfactory.

7.4.2.3 Sample the gas in the secondary container and measure static pressure. This will assure that the combustible gas control method is working properly and that the combustible gas criteria specified in Section 4.4 will be met.

7.4.2.4 Load the secondary container.

8.0 ACCEPTANCE TESTS AND MAINTENANCE

8.1 Acceptance Test

Prior to the first use of the 10-160B package, the following tests and evaluations will be performed:

8.1.1 Visual Examination

The package will be examined visually for any adverse conditions in materials or fabrication.

8.1.2 Structural Tests

Containment welds identified on Dwg. C-110-D-29003-010 are inspected per ASME Code, Section III, Div. I, Subsection ND, Article ND-5000.

All ferromagnetic material welds are inspected per ASME Code, Section III, Div. I, Subsection NF, NF-5230 for Class 3 support attachments, and Section V Article 7 for magnetic particle (MT) examinations, and Section V Article 6 for liquid penetrant (PT) examinations. Acceptance standards are per ASME Section III, Div. I, Subsection NF, NF-5340 and NF-5350, as appropriate.

All non-ferromagnetic material welds are liquid penetrant (PT) inspected per ASME Code, Section V, Article 6 with acceptance criteria per ASME Code, Section III, Div. I, Subsection NF, NF-5350.

Welds on lifting and tiedown lugs are inspected before and after 150% load test in accordance with the ASME Code requirements for MT examination as specified above.

8.1.3 Leak Tests

This test shall be performed, prior to acceptance and operation of a newly fabricated package, in accordance with ASTM E-427 using a halogen leak detector or ASTM E-499 using a helium leak detector depending on the test gas used. The detector shall be capable of meeting the applicable sensitivity requirements specified in Figures 4.4, 4.8, or 4.12 in Chapter 4. Calibration of the leak detector shall be performed using a leak rate standard traceable to NIST. The leak standard's setting shall correspond to the approved leak test rate (see Chapter 4). The annulus between the o-ring seals of the 10-160B primary and secondary lids will be evacuated to a minimum vacuum of 20"Hg, and then be pressurized to a minimum pressure of 25 psig with pure dichlorodifluoromethane (R-12) or 1,1,1,2 – tetrafluoroethane (R-134a). Helium testing does not require evacuation of the annulus prior to pressurization. The detector probe shall be moved along the interior surface of the inner seal according to the specifications of ASTM E-427 or E-499.

If installed, the vent and drain lines will be tested as above by evacuating and pressurizing the inlet (cavity) side of the lines and checking for leaks at the outlet side of the cap screw.

The maximum allowable leak rate (which is temperature dependent) is specified in Section 4.5, 4.6, or 4.7 (depending on the test gas used). Any condition, which results in leakage in excess of this value, shall be corrected.

8.1.4 Component Tests

Gasket and seals will be procured and examined in accordance with the Duratek Quality Assurance Program.

8.1.5 Test for Shielding Integrity

Shielding integrity of the package will be verified by gamma scan or gamma probe methods to assure package is free of significant voids in the poured shield annulus. All gamma scanning will be performed on a 4-inch square or less grid system. The

acceptance criteria will be that voids resulting in shield loss in excess of 10% of the normal lead thickness in the direction measured shall not be acceptable.

8.1.6 Thermal Acceptance Tests

No thermal acceptance testing will be performed on the 10-160B package. Refer to the Thermal Evaluation, Section 3.0 of this report.

8.1.7 Impact Limiter Foam

Acceptance testing of the impact limiter foam will be performed as required by ES-M-172, which is included in Appendix 8.3.1.

8.1.8 Pressure Test

A pressure test of the containment system will be performed as required by 10CFR71.85. As determined in Section 3.4.4, the maximum normal operating pressure for the cask cavity is 8.4 psig, therefore the minimum test pressure will be 1.5 x 8.4 = 12.6 psig.

8.2 Maintenance Program

Duratek is committed to an ongoing preventative maintenance program for all shipping packages. The 10-160B package will be subjected to routine and periodic inspection and tests as outlined in this section and Duratek approved procedure.

8.2.1 Routine Maintenance

Unless noted otherwise, for loaded packages containing large quantity LSA materials or greater than Type A quantities of non-LSA materials, each of the following safety related items and functional features shall be visually examined for defects or replacement. Corrective action for defects shall be as noted.

8.2.1.1 Fasteners

The primary and secondary lid bolts shall be visually inspected for defects whenever it is necessary to remove the corresponding lid. Obtain replacement parts as specified on Drawing C-110-D-29003-010 (current revision) for any components that show cracking or other visual signs of distress.

The cap screws for the vent port, test ports and drain shall be visually inspected for defects whenever it is necessary to remove them. Obtain replacement cap screws as specified on Drawing C-110-D-29003-010 (current revision) for any cap screws that show cracking or other visual signs of distress.

8.2.1.2 Gaskets and Seals

a. Primary Lid Seals

The primary lid O-ring seals shall be visually inspected for serviceability, ensuring that they are in the proper position and free of cracks, tears, cuts or discontinuities that may prevent them from sealing properly. The seal seating surfaces shall be visually inspected to ensure that they are free of damage, dirt, gravel or any foreign matter, which might damage the seals. If any defects are detected, the seals shall be replaced and/or the seal seating surfaces shall be reworked as necessary to ensure that the lid will seal properly.

New O-rings shall be lightly coated with a lightweight lubricant such as Parker Super O-Lube or equivalent prior to installation. The lubricant will minimize deterioration or cracking of the elastomer during usage and tearing if removal from the dovetail groove is necessary for inspection. If new O-rings have not been installed, coat the exposed surfaces of the O-rings with the lightweight lubricant immediately prior to closing the lid. Excess lubricant shall be wiped off before closing the lid.

b. Secondary Lid Seals

The secondary lid O-ring seals and seating surfaces shall be inspected as specified in Section 8.2.1.2 (a) at any time it is necessary to remove the secondary lid. Seal replacement and/or seating surface repair shall be as specified in Section 8.2.1.2 (a).

c. Test/Vent Ports and Drain Seals

The above seals and seating surfaces shall be inspected as specified in Section 8.2.1.2 (a) at any time it is necessary to remove them. Seal replacement and/or seating surface repair shall be as specified in Section 8.2.1.2 (a).

8.2.1.3 Painted Surfaces Identification Markings and Match Marks Used for Closure Orientation

The above items shall be visually inspected to ensure that painted surfaces are in good condition, identification markings are legible and that match marks used for closure orientation remain legible and are easy to identify.

8.2.2 Periodic Maintenance

The following inspections and/or tests shall be performed as specified.

8.2.2.1 Periodic Leak Tests

The package shall be leak tested as described in Section 8.1.3 after its third use. In addition, the containment system, before actual use for shipment, shall have been leak tested according to Section 8.1.3, or to the Leaktight Test specified below, within the preceding 12-month period.

The Leaktight Test shall be performed in accordance with ANSI N14.5 using a mass spectrometer leak detector capable of meeting the sensitivity requirements specified in Chapter 4, Section 4.9. Calibration of the leak detector shall be performed using a leak rate standard traceable to NIST. The leak standard's setting shall correspond to the leaktight leak test rate (see Chapter 4, Section 4.9). The test is conducted by evacuating the cask cavity to a 90% vacuum then pressurizing the cask cavity with helium (+1 psig, -0 psig). The annulus between the o-rings is evacuated until the vacuum is sufficient to operate the helium mass spectrometer leak detector and the helium concentration in the annulus is monitored. The monitored leak rate must satisfy the leak criterion specified in Section 4.9. If installed, the vent and drain lines will be tested as above by evacuating and pressurizing the inlet (cavity) side of the lines and monitoring the helium concentration at the outlet side of the cap screw. Any condition, which results in leakage in excess of the leak criterion, shall be corrected before use of the cask.

Also, before actual use for shipment, all seals shall have been replaced within the preceding 12-month period.

8.2.2.2 Assembly Verification Leak Test

This test is required before each shipment of Type B material quantities. The test will verify that the containment system has been assembled properly.

The test will be performed by pressurizing the annulus between the O-ring seals of either the primary or the secondary lid or the inlet to the vent and drain lines (if applicable) with dry air or nitrogen.

NOTE: PRESHIPMENT LEAKAGE RATE TESTING IS REQUIRED ONLY FOR THE CONTAINMENT BOUNDARY AREAS THAT HAVE BEEN OPENED DURING THE UNLOAD-LOADING CYCLE.

NOTE: IF AIR IS USED FOR THE TEST, THE AIR SUPPLY SHOULD BE CLEAN AND DRY. IF IT IS NOT, OR IF THE QUALITY OF THE AIR SUPPLY IS UNCERTAIN, THE TEST SHOULD BE PERFORMED WITH NITROGEN TO ENSURE RELIABLE RESULTS.

The test shall be performed using a pressure gauge, accurate within 1%, or less, of full scale.

The test pressure shall be applied for at least 15 minutes (10 minutes for vent or drain ports). A drop in pressure of greater than the minimum detectable amount shall be cause for test failure. The maximum sensitivity of the gauge shall be 0.1 psig.

Sensitivity at the test conditions is equivalent to the prescribed procedure sensitivity of 10^{-3} ref-cm^3/sec based on dry air at standard conditions as defined in ANSI N14.5-1997 (See Section 4.4 for the determination of the test conditions).

8.2.2.3 Ratchet Binders

Ratchet binders are designed for long use with minimal maintenance. Inspection for operation is conducted prior to each use of the cask. The ratchet binder mechanism as well as the threads on the joining bolt are checked for dryness and ease of operation. If required, these parts are lubricated with standard chassis lubricant.

Ratchet binders which show excessive wear or have received impact or suspected overloading in an accident must be completely disassembled and inspected or replaced. Cause for rejection during an inspection shall include:

a. Cracks in the jaws or joining bolt.

b. Deformation of the jaws or joining bolt.

c. Excessive rust or corrosion pitting in the threads of the jaw or joining bolts.

8.2.3 Subsystem Maintenance

The 10-160B package contains no subsystem assemblies.

8.2.4 Valves Rupture Discs and Gaskets on Containment Vessel

As a minimum, all gasket seals will be replaced prior to the annual leak test specified in 8.2.2.1.

8.2.5 Shielding

No shielding tests will be performed after acceptance testing unless there has been a repair to a damaged area, which will affect shield integrity. Any shield testing which might be required would be in accordance with the original criteria specified in Section 8.1.5.

Appendix 8.3.1
Polyurethane Foam Specification
ES-M-172