DCD Markups for RAI 7.1-100

Table 2.2.15-1

IEEE Std. 603 Criterion System Applicability Matrix (1)(2)

Software projects		RTIF-NMS Platform							SSLC/ESF Platform										ICP	
		RTIF						NMS											VBIF	ATWS/SLC
Table 2.2.15-2, Item No.	IEEE Std. 603 Criterion	RTIF (2.2.10)	RPS (2.2.7)	LD&IS MSIV (2.2.12) [Note (4)]	CMS-SPTM (2.15.7)	NBS (2.1.2)	CRD (2.2.2)	NMS (2.2.5)	SSLC/ESF (2.2.13)	LD&IS non-MSIV (2.2.12) [Note (3)]	PRMS (2.3.1)	CMS non-SPTM (2.15.7) [Note (4)]	NBS (2.1.2)/ADS (N/A)	GDCS (2.4.2)	ICS (2.4.1)	SLC (2.2.4)	CBVS (2.16.2.2, 2.16.2.3) [Note (5)]	CRD (2.2.2)	VB Isolation Function (2.15.1)	ATWS/SLC (2.2.14)
1	4.1	R	C	C	C	C	C	R	R	C	C	C	C	C	C	C	C	C	R	R
2	4.4	R	C	C	C	C	C	R	R	C	C	C	C	C	C	C	C	C	R	R
3	4.5	R	C	C	C	C	C	R	R	C	C	C	C	C	C	C	C	C	R	R
4	4.6	R	C	C	C	C	C	R	R	C	C	C	C	C	C	C	C	C	R	R
5	4.7	R	C	C	C	C	C	R	R	C	C	C	C	C	C	C	C	C	R	R
6	4.8	R	C	C	C	C	C	R	R	C	C	C	C	C	C	C	C	C	R	R
7	4.9	R	C	C	C	C	C	R	R	C	C	C	C	C	C	C	C	C	R	R
8	5.1	R	C	C	C	C	C	R	R	C	C	C	C	C	C	C	C	C	R	R
9	5.2 and 7.3	R	C	C	C	C	C	R	R	C	C	C	C	C	C	C	C	C	R	R
10	5.6 and 6.3	R	C	C	C	C	C	R	R	C	C	C	C	C	C	C	C	C	R	R
11	5.7 and 6.5	R	C	C	C	C	C	R	R	C	C	C	C	C	C	C	C	C	R	R
12	5.9	R	C	C	C	C	C	R	R	C	C	C	C	C	C	C	C	C	R	R
13	5.10	R	C	C	C	C	C	R	R	C	C	C	C	C	C	C	C	C	R	R
14	5.11	R	C	C	C	C	C	R	R	C	C	C	C	C	C	C	C	C	R	R
15	5.12	R	C	C	C	C	C	R	R	C	C	C	C	C	C	C	C	C	R	R
16	6.1 and 7.1	R	C	C	C	C	C	R	R	C	C	C	C	C	C	C	C	C	R	R

Table 2.2.15-1

IEEE Std. 603 Criterion System Applicability Matrix (1)(2)

Software projects		RTIF-NMS Platform							SSLC/ESF Platform										ICP	
		RTIF						NMS											VBIF	ATWS/ SLC
Table 2.2.15-2, Item No.	IEEE Std. 603 Criterion	RTIF (2.2.10)	RPS (2.2.7)	LD&IS MSIV (2.2.12) [Note (4)]	CMS-SPTM (2.15.7)	NBS (2.1.2)	CRD (2.2.2)	NMS (2.2.5)	SSLC/ESF (2.2.13)	LD&IS non-MSIV (2.2.12) [Note (3)]	PRMS (2.3.1)	CMS non-SPTM (2.15.7) [Note (4)]	NBS (2.1.2)/ADS (N/A)	GDCS (2.4.2)	ICS (2.4.1)	SLC (2.2.4)	CBVS (2.16.2.2, 2.16.2.3) [Note (5)]	CRD (2.2.2)	VB Isolation Function (2.15.1)	ATWS/SLC (2.2.14)
17	6.2 and 7.2	R	C	C	C	C	C	R	R	C	C	C	C	C	C	C	C	C	R	R
18	6.4	R	C	C	C	C	C	R	R	C	C	C	C	C	C	C	C	C	R	R
19	6.6 and 7.4	R	C	C	C	C	C	R	R	C	C	C	C	C	C	C	C	C	R	R
20	6.7, 7.5, and 8.3	R	C	C	C	C	C	R	R	C	C	C	C	C	C	C	C	C	R	R
21	6.8	R	C	C	C	C	C	R	R	C	C	C	C	C	C	C	C	C	R	R
22	8.1	R	C	C	C	C	C	R	R	C	C	C	C	C	C	C	C	C	R	R
23	8.2	R	C	C	C	C	C	R	R	C	C	C	C	C	C	C	C	C	R	R

Notes:

(1) R means the IEEE Std. 603 criterion compliance report(s) for the indicated software project (i.e., RTIF, NMS, SSLC/ESF, VB Isolation Function, and ATWS/SLC) include(s) the associated parts of the functional systems marked with a C or string of Cs, if any, immediately to the right of the R. C means compliance with the IEEE Std. 603 criterion is documented by one or more reports written against the first software project marked with an R, to the left of the C(s). For example, the report(s) for the RTIF software project will demonstrate compliance to IEEE Std. 603 criterion 5.1 for RPS, LD&IS MSIV, CMS-SPTM, NBS, and CRD.

(2) IEEE Std. 603 criteria apply only to the safety-related portions of the functional systems that perform sense, command, or execute functions.

(3) LD&IS non-MSIV functions control the safety-related actuators (isolation valves and isolation dampers) in the following nonsafety-related systems: RWCU/SDC, FAPCS, EFDS, CIS, CWS, HPNSS, SAS, RBVS, CBVS, FBVS.

(4) CMS (non-SPTM) provides sensor inputs for both LD&IS MSIV and LD&IS non-MSIV functions.

(5) CBVS includes the safety-related CB isolation dampers (see Note 3), EFU and CRHAVS. SSLC/ESF platform executes the CRHS function logic for the safety-related CBVS subsystems, CRHAVS and EFU.

~~Table 2.2.15-1~~

~~ITAAC Applicability Matrix (2)~~

~~IEEE Std. 603 Criterion~~	~~NBS (2.1.2)~~	~~CRDS (2.2.2)~~	~~SLC System (2.2.4)~~	~~NMS (2.2.5)~~	~~RSS (2.2.6)~~	~~RPS (2.2.7)~~	~~LD&IS (2.2.12)~~	~~SSLC/ESF (2.2.13)~~	~~PRMS (2.3.1)~~	~~ICS (2.4.1)~~	~~GDCS (2.4.2)~~	~~CS* (2.15.1)~~	~~CMS (2.15.7)~~	~~SPTM (2.15.7)~~	~~RBHVS (2.16.2.1)~~	~~CBHVS (2.16.2.2)~~	~~EFU (2.16.2.3)~~
~~5.1~~	-	-	-	X	-	X	X	X	-	X	X	X	-	-	X	X	X
~~5.2 and 7.3~~	-	-	-	-	-	X	X	X	-	-	-	X	-	-	-	-	-
~~5.3~~	(3)	(3)	(3)	(3)	(3)	(3)	(3)	(3)	(3)	(3)	(3)	-	(3)	(3)	(3)	(3)	(3)
~~5.4~~	X	X	X	X	X	X	X	X	X	X	X	-	X	X	X	X	X
~~5.5~~	X	X	X	X	X	X	X	X	X	X	X	-	X	X	X	X	X
~~5.6 and 6.3~~	X	X	X	X	X	X	X	X	X	X	X	X	X	X	X	X	X
~~5.7 and 6.5~~	X	X	X	X	-	X	X	X	X	X	X	X	X	X	X	X	X
~~5.8~~	X	X	X	X	X	X	X	X	X	X	X	X	X	X	X	X	X
~~5.9~~	-	-	-	X	X	X	X	X	-	-	-	-	-	-	-	-	-
~~5.10~~	X	X	X	X	X	X	X	X	X	X	X	-	X	X	X	X	X
~~5.11~~	X	X	X	X	X	X	X	X	X	X	X	-	X	X	X	X	X
~~5.12~~	-	-	-	X	-	X	X	X	-	X	X	-	-	-	X	X	X
~~5.13~~	-	-	-	X	-	X	X	X	-	X	X	-	-	-	-	-	-
~~5.14~~	X	X	X	X	X	X	X	X	X	X	X	-	X	X	X	X	X
~~5.15~~	X	X	X	X	X	X	X	X	X	X	X	-	X	X	X	X	X
~~6.1 and 7.1~~	-	-	-	X	-	X	X	X	X	-	-	-	-	-	X	X	X
~~6.2 and 7.2~~	-	-	-	X	-	X	X	X	X	-	-	X	-	-	X	X	X
~~6.4~~	X	X	X	X	X	X	X	X	X	X	X	-	X	X	X	X	X
~~6.6 and 7.4~~	-	-	-	X	-	X	-	X	-	-	-	-	-	-	-	-	-
~~6.7, 7.5, and 8.3~~	-	-	-	X	-	X	-	X	-	-	-	-	-	-	X	X	X
~~6.8~~	X	-	X	X	-	X	X	X	X	-	-	-	X	X	-	-	-
~~8.1~~	X	X	X	X	X	X	X	X	X	X	X	-	X	X	X	X	X
~~8.2~~	-	X	-	-	-	-	X	-	-	X	X	-	-	-	X	X	X

~~(1) A dash means not applicable.~~
~~(2) Safety-related portions only.~~
~~(3) No ITAAC is required for this criterion. See the description of the 10 CFR 50, Appendix B, Quality Assurance Program that is applied to the design, fabrication, construction, and test of the safety-related structures, systems, and components provided as part of the preliminary safety evaluation report as required by 10 CFR 50.34(a)(7).~~
~~*CS=Containment System~~

7.1 INTRODUCTION

This chapter presents specific detailed design and performance information for the Instrumentation and Control (I&C) systems that are significant for plant operation and that are used throughout the plant. I&C Distributed Control and Information Systems (DCIS) are designated as either Safety-related DCIS (Q-DCIS) or Nonsafety-related DCIS (N-DCIS). A description of the system of classification is found in Section 3.2.

The following subsections, tables, and figures provide a synopsis of the DCIS.

- Subsection 7.1.1 contains a brief description of the DCIS.
- Subsection 7.1.2 summarizes the Q-DCIS.
- Subsection 7.1.3 contains a detailed description of the Q-DCIS.
- Subsection 7.1.4 summarizes the N-DCIS.
- Subsection 7.1.5 contains a detailed description of the N-DCIS.
- Subsection 7.1.6 discusses DCIS conformance to regulatory requirements, guidelines, and industry codes and standards.
- Table 7.1-1 is a regulatory requirements applicability matrix.
- Table 7.1-2 is a section roadmap of an evaluation of IEEE Std. 603 specific criteria compliance.
- Figure 7.1-1 is a simplified network functional ~~block~~ diagram of ~~the I&C~~the DCIS.
- Figure 7.1-2 is ~~a functional network diagram of the DCIS~~deleted.
- Figure 7.1-3 is a distributed power-sensor diversity diagram.
- Figure 7.1-4 is a hardware/software (architecture) diversity diagram.

7.1.1 Distributed Control and Information System

The DCIS is an arrangement of I&C networked components and individual systems that together provide:

- Digital processing and logic capability,
- Remote and local data acquisition,
- Datalinks and gateways (when necessary) between systems and components,
- Operator monitoring and control interfaces,
- Secure communications to external computer systems and networks,
- Alarm management functions, and

- Communications between the systems.

Figure 7.1-1 shows a simplified network functional ~~block~~ diagram of the DCIS.~~the ESBWR I&C system.~~ The data communication systems embedded in the DCIS perform the data communication functions that are part of or support the systems described in Sections 7.2 through 7.8. Figure 7.1-1 is a simplified ~~A network diagram of the DCIS appears as Figure 7.1-2, which is a~~ functional representation of the ~~design~~DCIS.

The Q-DCIS and N-DCIS architectures, their relationships, and their acceptance criteria are further described throughout Section 7.1.

The Q-DCIS and N-DCIS functions are implemented with diverse power and sensors as indicated in Figure 7.1-3 and diverse hardware and software architectures as shown in Figure 7.1-4. These are discussed in Reference 7.1-4, the Licensing Topical Report (LTR), "ESBWR I&C Defense-In-Depth And Diversity Report," NEDO-33251.

The Q-DCIS comprise the platforms that are defined in Table 7.1-1. The N-DCIS comprise the network segments that are defined in Table 7.1-1. These platforms or network segments comprise systems of integrated software and hardware elements. Software projects are developed for the various platforms or networks segments.

[*Project software plans control the development of each platform or network segment using a life-cycle process. The ESBWR Software Management Program Manual (SMPM) (Reference 7.1-12) and ESBWR Software Quality Assurance Program Manual (SQAPM) (Reference 7.1-10) provide the bases for developing project software plans and the life-cycle model that will control the software development process. These project software plans and baseline review reports (BRR) comprise the data that define the platform or network segment design processes, and reference the platform or network segment implementation documentation that will support closure of ITAAC including {{Design Acceptance Criteria}} ITAAC.*

A life-cycle phase baseline review process regulates the passage of the platform design from one life-cycle phase to the next life-cycle phase. A life-cycle phase summary BRR comprises a life-cycle phase requirements traceability analysis report, a life-cycle phase software safety analysis report, a life-cycle phase verification and validation report, a life-cycle phase cyber security analysis report, and a life-cycle phase baseline review team (BRT) report. The summary BRRs exist at the end of each life-cycle phase and conclude that the design process has been followed and that the design elements are adequate to pass through to the next life-cycle phase. The summary BRR provides assurance that the project software plans are implemented and producing adequate results at the end of each life-cycle phase.

A multiple-phase test process, using a series of overlapping tests, confirms that the as-built platform performs as designed. The Factory Acceptance Test (FAT) confirms that each part of a platform or network segment perform as designed. The Site Acceptance Test (SAT) confirms that the platforms or network segments are capable of operating as shown in the FAT and operate as designed as an integrated ESBWR instrumentation and control system.]*~~The software for the Q-DCIS and N-DCIS is designed and developed in accordance with the LTRs "ESBWR I&C Software Management Plan," NEDO-33226, NEDE-33226P, and "ESBWR I&C Software Quality Assurance Plan" NEDO-33245, NEDE-33245P. (References 7.1-12 and 7.1-10, respectively.) These plans describe the managerial, design, development, and software quality~~

System (FAPCS) operation. The RTIF cabinet houses the equipment that performs the Suppression Pool Temperature Monitoring functions for the CMS discussed in Subsection 7.5.2.

7.1.2.8.6.2 Other Containment Monitoring Systems Description Summary

Other CMS functions, some of which are nonsafety-related, include monitoring several key containment parameters. These include fluid and radiation levels, pressures, temperatures, hydrogen/oxygen concentrations, and dew point/humidity values. These parameters are monitored during normal reactor operations and post accident conditions to evaluate the containment integrity and other conditions. Abnormal measurements and indications initiate alarms in the MCR.

7.1.2.8.7 Vacuum Breaker Isolation Function

The safety-related VB isolation function prevents the loss of long-term containment integrity by automatically isolating an excessively leaking VB using a VB isolation valve. The RTIF cabinet houses the equipment that performs the VB isolation function. The VB isolation function is implemented on independent logic controllers as a Q-DCIS subsystem and uses equipment different from the RPS, NMS, and SSLC/ESF equipment. Refer to Subsection 7.3.6 for additional information.

7.1.3 Q-DCIS Specifics

The Q-DCIS architecture, its relationships, and its acceptance criteria are described below. ~~A simplified functional block diagram of the DCIS is shown as part of Figure 7.1-1.~~ The Q-DCIS data communication systems are embedded in the DCIS, which performs the data communication functions that are part of or support the systems described in Sections 7.2 through 7.8. A simplified network functional diagram of the DCIS appears as ~~part of~~ Figure 7.1-1~~2~~, which shows the elements of the Q-DCIS and the N-DCIS, and is a functional representation of the design.

7.1.3.1 Q-DCIS Design Bases

7.1.3.1.1 Q-DCIS Safety-Related Design Bases

The safety-related design bases applicable to the Q-DCIS are found in IEEE Std. 603, Sections 4.1, 4.2, 4.5, 4.8, and 4.10. These sections specify that the Q-DCIS:

- Reads signals from the safety-related instrumentation locally and through RMUs;
- Performs required signal conditioning, if this function is required, and then digitizes and formats the input signals into messages for transmission on the Q-DCIS network or data path;
- Transmits the data signals and commands onto the Q-DCIS network or data path for interface with other safety-related systems;

- Safety Parameter Display System (SPDS) logic.

7.1.5 N-DCIS Specifics

The N-DCIS data communication systems are embedded in the DCIS that performs the data communication functions that are part of and support the nonsafety-related systems described in Sections 7.2 through 7.8 and support the Q-DCIS to N-DCIS communications for the safety-related systems described in Sections 7.2 through 7.8. A simplified network functional ~~network~~ diagram of the DCIS appears as ~~part of~~ Figure 7.1-1~~2~~, ~~which~~ and indicates the elements of the N-DCIS and the Q-DCIS.

The N-DCIS architecture, its relationships, and its acceptance criteria are further described in this subsection.

7.1.5.1 N-DCIS Design Bases

7.1.5.1.1 N-DCIS Safety-Related Design Bases

The N-DCIS does not perform or ensure any safety-related function. It is classified as a nonsafety-related system, and has no safety-related design basis.

7.1.5.1.2 N-DCIS Nonsafety-Related Design Bases

The N-DCIS is used as the primary control, monitoring, and data communication system for power production applications. The design bases for the N-DCIS include the requirements to:

- Segment the N-DCIS display and control of the two PIP Systems (A&B) and the BOP systems so they can operate independently of one other;
- Segment the major reactor control systems (FWCS, SB&PC System, TGCS and PAS) so they can operate independently of one another and from the DPS;
- Perform closed loop control and system logic independently of the MCR VDUs and Ethernet networks. Operability of the RSS panels, and their VDUs is independent of the operation or existence of the MCR displays;
- Ensure that no single failure of an N-DCIS component affects power generation;
- Provide a communication path for nonsafety-related data gathered and distributed throughout the plant, including datalink interfaces to control systems. The communication paths are redundant and include both the "native" control systems and "foreign", vendor supplied or prepackaged control systems (condensate purification, offgas, radwaste, area radiation monitoring, and meteorological monitoring, for example);
- Reliably transfer to or from the plant areas, in digital format, analog or binary information that has been collected and digitized from nonsafety-related RMUs. The signals to the RMUs include transmitters, contact closures and other sensors or process

Managed network switches are redundant per segment and provide monitoring and control of the N-DCIS networks while transmitting, data, alarms, recording and display information, and operator control information between segments and components. Managed network switches monitor and transmit data acquisition and control messages and displays associated with that segment. Each managed network switch has the capability to monitor and control unexpected and excessive traffic on its respective N-DCIS network segment. Each network switch can have up to several hundred "nodes" and several "uplink" ports that are connected to the other switches; all connections to these switches are through the fiber optic cable network. Fiber optic cables used for nonsafety-related applications are sheathed in material meeting IEEE Std. 383 that addresses fire propagation mitigation.

The switches allow the various controllers, data acquisition and displays associated with a segment to communicate with each other by almost instantaneous virtual connections that end when the communication is finished. The switches' "backbone" capacity determines how many simultaneous two-way connections can be made, but the capability is much higher than actually required.

These managed switches have security features that include identification of legal addresses, the capability to ignore or not uplink (to other segments) unexpected connections or their traffic, and the capability to alarm network traffic. Only when a switch determines that an information data packet is destined for a node on another switch is the information put on an uplink to another switch. The network switches learn and maintain their own forwarding tables containing a list of all the nodes and hosts on their respective network segment. When a network switch receives a data communication packet, it forwards only that particular data packet to the segment to which that receiving host is connected. This mechanism prevents data traffic between devices on the network from affecting devices on other segments of the network.

The uplink ports on the switches are connected together radially and in a ring because multiple interconnections increase reliability. Specifically the switches use a "spanning tree protocol" to automatically enable and disable ports so there is one path from the nodes of one switch to another. Should a path become disabled, the switches automatically reconfigure to establish another path through the remaining switches and fiber optic cable paths. Reconfiguration requires no operator input and is usually accomplished in seconds.

Each switch "node" (workstation, display, and controller) is connected to redundant switches of the segment. These connections support normal plant operation. The switches have mean times between failure (MTBF) of greater than 100,000 hours. Each switch has redundant power feeds and can work from either power source. The switches and connected controllers support extensive component and data self-diagnostics, and failures are alarmed.

The above text and Figure 7.1-1~~2~~ show that the N-DCIS is not a single network. It is redundant and segmented to support the DCIS with very high reliability. A single failure of one of the redundant switches in a segment or multiple failures that involve no more than one switch per segment has no effect on plant operation or data. The failure is alarmed and can be repaired online. In the highly unlikely event of both switches of a segment simultaneously failing, that particular segment is lost. However, the remaining segments are unaffected and individual nodes connected to the failed switches can continue to function. The remaining switches then

Bypass indications use isolation devices that preclude the possibility of any adverse electrical effect of the bypass indication circuits on the plant safety-related system.

RG 1.53, Application of the Single-Failure Criterion to Nuclear Power Plant Protection Systems:~~.~~

- Conformance: The safety-related systems are organized into four physically and electrically-isolated divisions that use the principles of independence and redundancy for the single failure criterion as defined by IEEE Std. 379, Section 4, and IEEE Std. 603, Section 5.1; additionally, the design meets N-2 conditions. Analyses complying with IEEE Std. 379 will be used to confirm the safety-related systems designs' conformance to the single-failure criterion. ~~designs conform to the single failure criterion; additionally the design meets N-2 conditions.~~

RG 1.62, Manual Initiation of Protective Actions:~~.~~

- Conformance: The applicable I&C systems are designed to comply with RG 1.62. Specific conformance of the I&C systems is addressed in Sections 7.2 through 7.4.~~Manual initiation of the protective action is provided at the system level for safety-related systems conditions. An exception to RG 1.62, Regulatory Positions C.4 and C.5 is taken for the two of four divisional manual trip switches for ADS (SRV and DPV), GDCS, ICS, and SLC manual initiation. These switches are indirectly connected to the squib valve load drivers or valve solenoids through the SSLC/ESF. The DPS manual trip switches are independently connected to the squib valve load drivers or valve solenoids, through DPS logic.~~

RG 1.75, Physical Independence of Electric Systems:~~.~~

- Conformance: The safety-related system designs conform to RG 1.75 as described in Subsections 8.3.1.3 and 8.3.1.4.

RG 1.89, Environmental Qualification of Certain Electronic Equipment Important to Safety for Nuclear Power Plants~~.~~:

- Conformance: The safety-related system design conforms to RG 1.89.

RG 1.97, Instrumentation for Light-Water-Cooled Nuclear Power Plants to Assess Plant Conditions During and Following an Accident:~~.~~

- Conformance: The ~~I&C system~~Q-DCIS and N-DCIS are~~is~~ designed to meet the guidance of RG 1.97. Details of design implementation are discussed in Section 7.5.

RG 1.100, Seismic Qualification of Electric and Mechanical Equipment for Nuclear Power Plants~~.~~:

- Conformance: The Q-DCIS systems are designed to meet the ~~requirements~~ guidance set forth in RG 1.100. Details are discussed in Section 3.11.

RG 1.105, Instrument Setpoints for safety-related Systems:~~.~~

procedures used for Seismic Category I equipment and systems satisfy the provisions of IEEE Std. 344 as indicated in Section 3.10.

IEEE Std. 379, "IEEE Standard for the Application of the Single-Failure Criterion to Nuclear Power Generating Station Safety Systems." The Q-DCIS platforms, RTIF-NMS, SSLC/ESF, ATWS/SLC logic controllers, and VBIF logic controllers, are organized into four physically and electrically isolated divisions that use principles of redundancy and independence to conform to the single failure criterion.

IEEE Std. 383, "IEEE Standard for Type Test of Safety-related Electric Cables, Field Splices, and Connections for Nuclear Power Generating Stations." Electric cable conforms to this standard. Fiber optic cable insulation/covering/jacketing also conforms to the requirements for flame tests in IEEE Std. 383.

IEEE Std. 384, "IEEE Standard Criteria for Independence of Safety-related Equipment and Circuits". See the discussion of RG 1.75 in Subsection 7.1.6.4.

IEEE Std. 497, "IEEE Standard Criteria for Accident Monitoring Instrumentation for Nuclear Power Generating Stations." Accident monitoring instrumentation is discussed in Section 7.5.

IEEE Std. 518, "IEEE Guide for the Installation of Electrical Equipment to Minimize Electrical Noise Inputs to Controllers from External Sources". The design conforms to IEEE Std. 518.

IEEE Std. 603, "IEEE Standard Criteria for Safety Systems for Nuclear Power Generating Stations". Conformance to IEEE Std. 603 is discussed in Subsection 7.1.6.6.1.

IEEE Std. 1050, "IEEE Guide for Instrumentation Control Equipment Grounding in Generating Stations". The design conforms to IEEE Std. 1050.

7.1.6.6.1 IEEE Std. 603 – IEEE Standard Criteria for Safety Systems for Nuclear Power Generating Stations

The scope of IEEE Std. 603 includes safety-related I&C systems that are described in Sections 7.1 through 7.8. IEEE Std. 603 does not directly apply to nonsafety-related systems, other than to require independence between nonsafety-related systems and safety-related systems. IEEE Std. 603 provides design criteria for safety systems. ESBWR divides safety systems into two parts: the Q-DCIS platforms, and the subsystems that contain the sensors and actuators used by the Q-DCIS platforms. This section describes how the IEEE Std. 603 criteria are allocated to the different Q-DCIS platforms and subsystems. For convenience, some of these requirements may also be adopted as design bases for some nonsafety-related I&C components and systems such as for accident monitoring instrumentation, in accordance with RG 1.97. Compliance with the requirements of IEEE Std. 603 is also identified as compliance with the requirements and guidance contained within the federal regulations, GDC, SRM, and RGs, as described throughout Section 7.1. The safety-related I&C design comprises the Q-DCIS which includes the equipment in the RTIF, NMS, and SSLC/ESF cabinets. The design conforms to IEEE Std. 603. ITAACs are provided for the major attributes for compliance with IEEE Std. 603 and are not intended to limit the scope of compliance.

Table 7.1-1

I&C Systems Regulatory Requirements Applicability Matrix

System																													
Applicable Criteria Guidelines: SRP NUREG 0800, Section 7.1	Reference Standard	RPS (Q)	NMS (Q)	SPTM Function (Q)	ADS (Q)	GDCS (Q)	LD&IS (Q & N)	CRHS (Q)	SSLC /ESF (Q)	VB Isolation Function (Q)	SLC (Q)	RSS (Q & N)	RWCU /SDC (N)	ICS (Q)	PAM (Q & N)	CMS (Q &N)	PRMS (Q &N)	ARMS (N)	Interlock Systems (N)	NBS (Q & N)	RC&IS (N)	FWCS (N)	PAS (N)	SB&PC (N)	NMS (N)	CIS(N)	DPS(N) ATWS/SLC (Q)	Q DCIS (Q)	N DCIS (N)
General Design Criteria																													
1		X	X	X	X	X	X	X	X	X	X	X		X	X	X	X		X	X							X	X	X
2	IEEE Std. 603	X	X	X	X	X	X	X	X	X	X	X	X	X	X	X	X	X	X	X								X	X
4	IEEE Std. 603	X	X	X	X	X	X	X	X	X	X	X	X	X	X	X	X	X	X	X								X	X
13	IEEE Std. 603	X	X	X	X	X	X	X	X	X	X	X	X	X	X	X	X	X	X	X	X	X	X	X	X	X	X	X	X
19		X	X	X	X	X	X	X	X	X	X	X	X	X	X	X	X	X	X	X	X	X	X	X	X	X	X	X	X
20	IEEE Std. 603	X	X	X	X	X	X	X	X	X	X			X														X	
21	IEEE Std. 603 & IEEE Std. 338	X	X	X	X	X	X	X	X	X	X			X														X	
22	IEEE Std. 603	X	X	X	X	X	X	X	X	X	X			X														X	
23	IEEE Std. 603	X	X	X	X	X	X	X	X	X	X			X														X	
24	IEEE Std. 603	X	X	X	X	X	X	X	X	X	X	X	X	X	X	X	X	X	X	X	X	X	X	X	X	X	X	X	X
25	IEEE Std. 603	X	X	X															X									X	
29	IEEE Std. 603	X	X	X																	X							X	
SRM on SECY 93-087																													
II.Q	BTP HICB 19	X	X	X	X	X	X	X	X	X	X			X						X							X	X	X
II.T															X	X	X											X	X
Regulatory Guides (RG)																													
1.22		X	X	X	X	X	X	X	X	X	X			X													X	X	
1.47	IEEE Std. 603	X	X	X	X	X	X	X	X	X	X			X		X	X										X	X	
1.53	IEEE Std. 379 IEEE Std. 603	X	X	X	X	X	X	X	X	X	X	X		X		X	X										X	X	
1.62	IEEE Std. 603	X		X	X	X	X	X	X	X	X			X													X	X	

Table 7.1-1

I&C Systems Regulatory Requirements Applicability Matrix

System																													
Applicable Criteria Guidelines: SRP NUREG-0800, Section 7.1	Reference Standard	RPS (Q)	NMS (Q)	SPTM Function (Q)	ADS (Q)	GDCS (Q)	LD&IS (Q & N)	CRHS (Q)	SSLC /ESF (Q)	VB Isolation Function (Q)	SLC (Q)	RSS (Q & N)	RWCU /SDC (N)	ICS (Q)	PAM (Q & N)	CMS (Q &N)	PRMS (Q &N)	ARMS (N)	Interlock Systems (N)	NBS (Q & N)	RC&IS (N)	FWCS (N)	PAS (N)	SB&PC (N)	NMS (N)	CIS(N)	DPS(N) ATWS/SLC (Q)	Q DCIS (Q)	N DCIS (N)
1.75	IEEE Std. 384	X	X	X	X	X	X	X	X	X	X	X		X		X	X		X	X							X	X	
1.89	IEEE Std. 323	X	X	X	X	X	X	X	X	X	X			X						X							X	X	
1.97	IEEE Std. 497		X	X											X	X	X	X										X	X
1.100		X	X	X	X	X	X	X	X	X	X	X		X	X	X	X			X							X	X	
1.105	ANSI/ISA S67.04.01	X	X	X	X	X	X	X	X	X	X			X		X	X		X	X							X	X	
1.118	IEEE Std. 338	X	X	X	X	X	X	X	X	X	X	X		X		X	X		X								X	X	
1.151	ANSI/ISA S67.02.01@					X					X		X	X		X			X	X		X				X	X		
1.152*	IEEE Std. 7-4.3.2	X	X	X	X	X	X	X	X	X	X			X		X	X			X							X	X	X
1.153	IEEE Std. 603	X	X	X	X	X	X	X	X	X	X	X		X		X	X			X							X	X	
1.168*	IEEE Std. 1012 IEEE Std. 1028	X	X	X	X	X	X	X	X	X	X			X		X	X			X							X	X	(1)
1.169*	IEEE Std. 828	X	X	X	X	X	X	X	X	X	X			X		X	X			X							X	X	(1)
1.170*	IEEE Std. 829	X	X	X	X	X	X	X	X	X	X			X		X	X			X							X	X	(1)
1.171*	IEEE Std. 1008	X	X	X	X	X	X	X	X	X	X			X		X	X			X							X	X	(1)
1.172*	IEEE Std. 830	X	X	X	X	X	X	X	X	X	X			X		X	X			X							X	X	(1)
1.173*	IEEE Std. 1074	X	X	X	X	X	X	X	X	X	X			X		X	X			X							X	X	(1)
1.180	IEEE Std. 1050	X	X	X	X	X	X	X	X	X	X	X‡‡	X‡‡	X	X‡‡	X‡‡	X‡‡	X‡‡	X‡‡	X	X‡‡	X‡‡	X‡‡	X‡‡	X‡‡	X‡‡	X‡‡	X	X‡‡
1.204	IEEE Std. 1050	X	X	X	X	X	X	X	X	X	X	X	X	X	X	X	X	X	X	X	X	X	X	X	X	X	X	X	X
1.209	IEEE Std. 323	X	X	X	X	X	X	X	X	X	X	X		X	X	X	X			X							X	X	
Branch Technical Positions (BTP)																													
BTP HICB-1	IEEE Std. 603					X													X									X	
BTP HICB-3	IEEE Std. 603	N/A																											

Table 7.1-1

I&C Systems Regulatory Requirements Applicability Matrix

		System																											
Applicable Criteria Guidelines: SRP NUREG 0800, Section 7.1	Reference Standard	RPS (Q)	NMS (Q)	SPTM Function (Q)	ADS (Q)	GDCS (Q)	LD&IS (Q & N)	CRHS (Q)	SSLC /ESF (Q)	VB Isolation Function (Q)	SLC (Q)	RSS (Q & N)	RWCU /SDC (N)	ICS (Q)	PAM (Q & N)	CMS (Q &N)	PRMS (Q &N)	ARMS (N)	Interlock Systems (N)	NBS (Q & N)	RC&IS (N)	FWCS (N)	PAS (N)	SB&PC (N)	NMS (N)	CIS(N)	DPS(N) ATWS/SLC (Q)	Q DCIS (Q)	N DCIS (N)
BTP HICB-4		N/A																											
BTP HICB-6	IEEE Std. 603	N/A																											
BTP HICB-8	Refer to RG 1.22	X	X	X	X	X	X	X	X	X	X			X													X	X	
BTP HICB-9	Refer to RG 1.153	X																										X	
BTP HICB-10	Refer to RG 1.97		X	X											X		X	X										X	X
BTP HICB-11	Refer to RG1.75 RG 1.153	X	X	X	X	X	X	X	X	X	X	X		X		X	X		X	X							X	X	X
BTP HICB-12	Refer to RG 1.105	X	X	X	X	X	X	X	X	X	X			X		X	X			X							X	X	X
BTP HICB-13	Refer to RG 1.153	N/A																											
BTP HICB-14*	Refer to RG 1.152	X	X	X	X	X	X	X	X	X	X	X		X		X	X			X							X	X	X
BTP HICB-16		X	X	X	X	X	X	X	X	X	X	X	X	X	X	X	X	X	X	X	X	X	X	X	X	X	X	X	X
BTP HICB-17*	Refer to RG 1.22, 1.47, 1.53, 1.118, 1.152 & 1.153	X	X	X	X	X	X	X	X	X	X	X		X		X	X		X	X							X	X	X
BTP HICB-18*	Refer to RG 1.152	X	X	X	X	X	X	X	X	X	X	X		X		X	X		X	X							X	X	X
BTP HICB-19*	NUREG/CR-6303	X	X	X	X	X	X	X	X	X	X			X						X		X					X	X	X
BTP HICB-21*	NUREG/CR-6083	X	X	X	X	X	X	X	X	X	X	X		X		X	X			X							X	X	X

Notes:
Q=Safety-related, N=Nonsafety-related
X = The code or regulation is applicable to the specified system.
N/A = The code or regulation is not applicable to the ESBWR design.
(1) = Parts or all of this code or regulation are voluntarily invoked for the specified system..
*These criteria are addressed with the digital computer related functions of the Q DCIS
††N DCIS hardware uses industrial methods for EMI/EMF compliance
#Initiates the 10 CFR 50.62 ARI, SLC and FW runback and trip functions as described in Section 7.8.
@ Sections of the ANSI/ISA standard that are not specific to safety-related systems, but provide guidance on design practices for tubing, vents, & drains apply to identified (N) systems.

Table 7.1-1

I&C Regulatory Requirements Applicability Matrix

	Q-DCIS																			N-DCIS			
	RTIF - NMS Platform							SSLC/ESF Platform										Independent Control Platform		Network Segments			
	RTIF						NMS																
Applicable Criteria Guidelines: SRP NUREG-0800, Section 7.1	RTIF	RPS	LD&IS (MSIV Only)(6)	CMS (includes SPTM)(6)	NBS(6)	CRD(6)	NMS	SSLC/ESF(3)	LD&IS (non-MSIV)(1)(6)	PRMS	CMS(6)	NBS (includes ADS)(6)	GDCS	ICS	SLC(6)	CBVS(2)	CRD(5)(6)	VBIF	ATWS/SLC(4)(6)	GENE	PIP A/B	BOP	PCF
10 CFR																							
50.55a(a)(1)	X	X	X	X	X	X	X	X	X	X	X	X	X	X	X	X	X	X	X	X	X	X	X
50.55a(h)	X	X	X	X	X	X	X	X	X	X	X	X	X	X	X	X	X	X	X				
50.34(f)(1)(v) [II.K.3.13]								X				X	X	X									
50.34(f)(1)(x) [II.K.3.28]												X											
50.34(f)(2)(iii) [I.D.1]	X	X	X	X	X	X	X	X	X	X	X	X	X	X	X	X	X	X	X	X	X	X	X
50.34(f)(2)(iv) [I.D.2]																				X			
50.34(f)(2)(v) [I.D.3]	X	X	X	X	X	X	X	X	X	X	X	X	X	X	X	X	X	X	X				X
50.34(f)(2)(viii) [II.B.3]								X			X												
50.34(f)(2)(x) [II.D.1]								X			X												
50.34(f)(2)(xi) [II.D.3]								X				X											
50.34(f)(2)(xiv) [II.E.4.2]	X		X					X	X														

Table 7.1-1

I&C Regulatory Requirements Applicability Matrix

	Q-DCIS																			N-DCIS			
	RTIF - NMS Platform							SSLC/ESF Platform										Independent Control Platform		Network Segments			
	RTIF						NMS																
Applicable Criteria Guidelines: SRP NUREG-0800, Section 7.1	RTIF	RPS	LD&IS (MSIV Only)(6)	CMS (includes SPTM)(6)	NBS(6)	CRD(6)	NMS	SSLC/ESF(3)	LD&IS (non-MSIV)(1)(6)	PRMS	CMS(6)	NBS (includes ADS)(6)	GDCS	ICS	SLC(6)	CBVS(2)	CRD(5)(6)	VBIF	ATWS/SLC(4)(6)	GENE	PIP A/B	BOP	PCF
50.34(f)(2)(xv) [II.E.4.4]								X	X													X	
50.34(f)(2)(xvii) [II.F.1]								X		X	X												X
50.34(f)(2)(xviii) [II.F.2]							X	X				X											X
50.34(f)(2)(xix) [II.F.3]								X		X	X	X											X
50.34(f)(2)(xxi) [II.K.1.22]	X	X						X						X							X		
50.34(f)(2)(xxiii) [II.K.2.10]		X						X						X									
50.34(f)(2)(xxiv) [II.K.3.23]																							X
50.34(f)(2)(xxvi) [III.D.1.1]								X	X														X
50.34(f)(2)(xxvii) [III.D.3.3]								X		X	X												X
50.34(f)(2)(xxviii) [III.D.3.4]								X		X						X							
50.44(c)(4)								X			X												

Table 7.1-1

I&C Regulatory Requirements Applicability Matrix

	Q-DCIS																			N-DCIS			
	RTIF - NMS Platform							SSLC/ESF Platform										Independent Control Platform		Network Segments			
	RTIF						NMS																
Applicable Criteria Guidelines: SRP NUREG-0800, Section 7.1	RTIF	RPS	LD&IS (MSIV Only)(6)	CMS (includes SPTM)(6)	NBS(6)	CRD(6)	NMS	SSLC/ESF(3)	LD&IS (non-MSIV)(1)(6)	PRMS	CMS(6)	NBS (includes ADS)(6)	GDCS	ICS	SLC(6)	CBVS(2)	CRD(5)(6)	VBIF	ATWS/SLC(4)(6)	GENE	PIP A/B	BOP	PCF
50.49	Refer to Table 3.11-1 (Electrical and Mechanical Equipment for Environmental Qualification)																						
50.62							X	X						X					X	X	X	X	
50.63	X	X	X			X		X	X				X	X		X							
52.47(a)(21)	X	X	X	X	X	X	X	X	X	X	X	X	X	X	X	X	X	X	X	X	X	X	X
52.47(b)(1)	X	X	X	X	X	X	X	X	X	X	X	X	X	X	X	X	X	X	X	X	X	X	X
52.47(a)(25)	NA																						
52.47	X	X	X	X	X	X	X	X	X	X	X	X	X	X	X	X	X	X	X	X	X	X	X
52.47(c)(2)	NA																						
GENERAL DESIGN CRITERIA																							
1	X	X	X	X	X	X	X	X	X	X	X	X	X	X	X	X	X	X	X	X	X	X	X
2	X	X	X	X	X	X	X	X	X	X	X	X	X	X	X	X	X	X	X	X	X	X	X

Table 7.1-1

I&C Regulatory Requirements Applicability Matrix

	Q-DCIS																			N-DCIS			
	RTIF - NMS Platform							SSLC/ESF Platform										Independent Control Platform		Network Segments			
	RTIF						NMS																
Applicable Criteria Guidelines: SRP NUREG-0800, Section 7.1	RTIF	RPS	LD&IS (MSIV Only)(6)	CMS (includes SPTM)(6)	NBS(6)	CRD(6)	NMS	SSLC/ESF(3)	LD&IS (non-MSIV)(1)(6)	PRMS	CMS(6)	NBS (includes ADS)(6)	GDCS	ICS	SLC(6)	CBVS(2)	CRD(5)(6)	VBIF	ATWS/SLC(4)(6)	GENE	PIP A/B	BOP	PCF
4	X	X	X	X	X	X	X	X	X	X	X	X	X	X	X	X	X	X	X	X	X	X	X
10	X	X					X																
12	X	X					X													X			
13	X	X	X	X	X	X	X	X	X	X	X	X	X	X	X	X	X	X	X	X	X	X	X
15	X		X					X	X			X											
16	X		X					X	X									X					
19	X	X	X	X	X	X	X	X	X	X	X	X	X	X	X	X	X	X	X	X	X	X	X
20	X	X	X	X	X	X	X	X	X	X	X	X	X	X	X	X	X	X	X				
21	X	X	X	X	X	X	X	X	X	X	X	X	X	X	X	X	X	X	X				
22	X	X	X	X	X	X	X	X	X	X	X	X	X	X	X	X	X	X	X				
23	X	X	X	X	X	X	X	X	X	X	X	X	X	X	X	X	X	X	X				

Table 7.1-1

I&C Regulatory Requirements Applicability Matrix

	Q-DCIS																			N-DCIS			
	RTIF - NMS Platform							SSLC/ESF Platform										Independent Control Platform		Network Segments			
	RTIF						NMS																
Applicable Criteria Guidelines: SRP NUREG-0800, Section 7.1	RTIF	RPS	LD&IS (MSIV Only)(6)	CMS (includes SPTM)(6)	NBS(6)	CRD(6)	NMS	SSLC/ESF(3)	LD&IS (non-MSIV)(1)(6)	PRMS	CMS(6)	NBS (includes ADS)(6)	GDCS	ICS	SLC(6)	CBVS(2)	CRD(5)(6)	VBIF	ATWS/SLC(4)(6)	GENE	PIP A/B	BOP	PCF
24	X	X	X	X	X	X	X	X	X	X	X	X	X	X	X	X	X	X	X	X	X	X	X
25	X	X					X													X			
26	X	X				X	X												X	X			
27	X	X				X	X												X	X			
28																	X			X			
29	X	X	X	X	X	X	X	X	X	X	X	X	X	X	X	X	X	X	X	X			
30								X	X			X											
33								X				X	X	X							X		
34								X						X									
35								X				X	X	X	X				X				
37								X				X	X	X	X				X				

Table 7.1-1

I&C Regulatory Requirements Applicability Matrix

	Q-DCIS																			N-DCIS			
	RTIF - NMS Platform							SSLC/ESF Platform										Independent Control Platform		Network Segments			
	RTIF						NMS																
Applicable Criteria Guidelines: SRP NUREG-0800, Section 7.1	RTIF	RPS	LD&IS (MSIV Only)(6)	CMS (includes SPTM)(6)	NBS(6)	CRD(6)	NMS	SSLC/ESF(3)	LD&IS (non-MSIV)(1)(6)	PRMS	CMS(6)	NBS (includes ADS)(6)	GDCS	ICS	SLC(6)	CBVS(2)	CRD(5)(6)	VBIF	ATWS/SLC(4)(6)	GENE	PIP A/B	BOP	PCF
38																					X		
41								X			X											X	
42																						X	
43								X			X											X	
44														X									
63								X															X
64								X		X	X												X
SRM on SECY 93-087																							
II.Q	X	X	X	X	X	X	X	X	X	X	X	X	X	X	X	X	X	X	X	X	X	X	
II.T								X												X			X
Regulatory Guides (RG)																							
1.22	X	X	X	X	X	X	X	X	X	X	X	X	X	X	X	X	X	X	X				

Table 7.1-1

I&C Regulatory Requirements Applicability Matrix

	Q-DCIS																			N-DCIS			
	RTIF - NMS Platform							SSLC/ESF Platform										Independent Control Platform		Network Segments			
	RTIF						NMS																
Applicable Criteria Guidelines: SRP NUREG-0800, Section 7.1	RTIF	RPS	LD&IS (MSIV Only)(6)	CMS (includes SPTM)(6)	NBS(6)	CRD(6)	NMS	SSLC/ESF(3)	LD&IS (non-MSIV)(1)(6)	PRMS	CMS(6)	NBS (includes ADS)(6)	GDCS	ICS	SLC(6)	CBVS(2)	CRD(5)(6)	VBIF	ATWS/SLC(4)(6)	GENE	PIP A/B	BOP	PCF
1.45								X	X	X	X												
1.47	X	X	X	X	X	X	X	X	X	X	X	X	X	X	X	X	X	X	X				
1.53	X	X	X	X	X	X	X	X	X	X	X	X	X	X	X	X	X	X	X				
1.62	X	X	X					X	X			X	X	X		X		X	X				
1.75	X	X	X	X	X	X	X	X	X	X	X	X	X	X	X	X	X	X	X				
1.89	Refer to Table 3.11-1 (Electrical and Mechanical Equipment for Environmental Qualification)																						
1.97(10)	X	X	X	X	X	X	X	X	X	X	X	X	X	X	X	X	X	X	X	X	X	X	X
1.100	Refer to Table 3.11-1 (Electrical and Mechanical Equipment for Environmental Qualification)																						
1.105	X	X	X	X	X	X	X	X	X	X	X	X	X	X	X	X	X	X	X	X			
1.118	X	X	X	X	X	X	X	X	X	X	X	X	X	X	X	X	X	X	X				
1.151 (8)		X		X	X	X			X		X	X	X	X	X				X		X	X	
1.152(7)	X	X	X	X	X	X	X	X	X	X	X	X	X	X	X	X	X	X	X	X	X	X	X

Table 7.1-1

I&C Regulatory Requirements Applicability Matrix

	Q-DCIS																			N-DCIS			
	RTIF - NMS Platform							SSLC/ESF Platform										Independent Control Platform		Network Segments			
	RTIF						NMS																
Applicable Criteria Guidelines: SRP NUREG-0800, Section 7.1	RTIF	RPS	LD&IS (MSIV Only)(6)	CMS (includes SPTM)(6)	NBS(6)	CRD(6)	NMS	SSLC/ESF(3)	LD&IS (non-MSIV)(1)(6)	PRMS	CMS(6)	NBS (includes ADS)(6)	GDCS	ICS	SLC(6)	CBVS(2)	CRD(5)(6)	VBIF	ATWS/SLC(4)(6)	GENE	PIP A/B	BOP	PCF
1.153	X	X	X	X	X	X	X	X	X	X	X	X	X	X	X	X	X	X	X				
1.168(7)	X	X	X	X	X	X	X	X	X	X	X	X	X	X	X	X	X	X	X	X	X	X	X
1.169(7)	X	X	X	X	X	X	X	X	X	X	X	X	X	X	X	X	X	X	X	X	X	X	X
1.170(7)	X	X	X	X	X	X	X	X	X	X	X	X	X	X	X	X	X	X	X	X	X	X	X
1.171(7)	X	X	X	X	X	X	X	X	X	X	X	X	X	X	X	X	X	X	X	X	X	X	X
1.172(7)	X	X	X	X	X	X	X	X	X	X	X	X	X	X	X	X	X	X	X	X	X	X	X
1.173(7)	X	X	X	X	X	X	X	X	X	X	X	X	X	X	X	X	X	X	X	X	X	X	X
1.180(9)	Refer to Table 3.11-1 (Electrical and Mechanical Equipment for Environmental Qualification)																						
1.204	X	X	X	X	X	X	X	X	X	X	X	X	X	X	X	X	X	X	X				
1.209	Refer to Table 3.11-1 (Electrical and Mechanical Equipment for Environmental Qualification)																						
Branch Technical Positions (BTP)																							
BTP HICB-1								X					X								X		

Table 7.1-1

I&C Regulatory Requirements Applicability Matrix

	Q-DCIS																			N-DCIS			
	RTIF - NMS Platform							SSLC/ESF Platform										Independent Control Platform		Network Segments			
	RTIF						NMS																
Applicable Criteria Guidelines: SRP NUREG-0800, Section 7.1	RTIF	RPS	LD&IS (MSIV Only)(6)	CMS (includes SPTM)(6)	NBS(6)	CRD(6)	NMS	SSLC/ESF(3)	LD&IS (non-MSIV)(1)(6)	PRMS	CMS(6)	NBS (includes ADS)(6)	GDCS	ICS	SLC(6)	CBVS(2)	CRD(5)(6)	VBIF	ATWS/SLC(4)(6)	GENE	PIP A/B	BOP	PCF
BTP HICB-3	N/A																						
BTP HICB-6	N/A																						
BTP HICB-8	X	X	X	X	X	X	X	X	X	X	X	X	X	X	X	X	X	X	X				
BTP HICB-9	X	X				X																	
BTP HICB-10(10)	X	X	X	X	X	X	X	X	X	X	X	X	X	X	X	X	X	X	X	X	X	X	X
BTP HICB-11	X	X	X	X	X	X	X	X	X	X	X	X	X	X	X	X	X	X	X				
BTP HICB-12	X	X	X	X	X	X	X	X	X	X	X	X	X	X	X	X	X	X	X				
BTP HICB-13	N/A																						
BTP HICB-14(7)	X	X	X	X	X	X	X	X	X	X	X	X	X	X	X	X	X	X	X				
BTP HICB-16	X	X	X	X	X	X	X	X	X	X	X	X	X	X	X	X	X	X	X	X	X	X	X
BTP HICB-17(7)	X	X	X	X	X	X	X	X	X	X	X	X	X	X	X	X	X	X	X				
BTP HICB-18(7)	X	X					X	X										X	X				

Table 7.1-1

I&C Regulatory Requirements Applicability Matrix

	Q-DCIS																			N-DCIS			
	RTIF - NMS Platform							SSLC/ESF Platform										Independent Control Platform		Network Segments			
	RTIF						NMS																
Applicable Criteria Guidelines: SRP NUREG-0800, Section 7.1	RTIF	RPS	LD&IS (MSIV Only)(6)	CMS (includes SPTM)(6)	NBS(6)	CRD(6)	NMS	SSLC/ESF(3)	LD&IS (non-MSIV)(1)(6)	PRMS	CMS(6)	NBS (includes ADS)(6)	GDCS	ICS	SLC(6)	CBVS(2)	CRD(5)(6)	VBIF	ATWS/SLC(4)(6)	GENE	PIP A/B	BOP	PCF
BTP HICB-19(7)	X	X	X	X	X	X	X	X	X	X	X	X	X	X	X	X	X	X	X	X	X	X	
BTP HICB-21(7)	X	X	X	X	X	X	X	X	X	X	X	X	X	X	X	X	X	X	X				

Notes:

(1) LD&IS (non-MSIV) controls the safety-related actuators (for the isolation valves and dampers) associated with the following nonsafety-related systems: RWCU/SDC, FAPCS, EFDS, CIS, CWS, CMS, HPNSS, RBVS, and FBVS. RWCU/SDC provides safety-related sensor inputs to LD&IS (non-MSIV). The regulatory requirements associated with these actuators and sensors are addressed as part of LD&IS.

(2) CBVS includes the CRHS and CRHAVS subsystems and EFUs.

(3) SSLC/ESF includes RSS, MCRP and safety-related VDUs.

(4) Includes the NBS sensors associated with ATWS/SLC.

(5) SSLC/ESF platform column for CRD includes safety-related sensors associated with control rod separation detection.

(6) The following safety-related systems have logic implemented on multiple platforms in support of their protective functions: CMS, CRD, LD&IS, NBS and SLC. Refer to DCD Sections 7.2, 7.3, 7.4, and 7.5 for detailed descriptions of the system functions.

(7) These criteria are addressed with digital computer-related functions of the Q-DCIS and N-DCIS.

(8) Sections of the ANSI/ISA standard that are not specific to safety-related systems, but provide guidance on design practices for tubing, vents and drains apply to the systems associated with the N-DCIS network segments.

(9) Hardware associated with the N-DCIS network segments uses industrial methods for EMI/EMF/RFI/EMC compliance.

(10) The ESBWR I&C conforms to RG 1.97 and applies the guidance in IEEE std. 497. RG 1.97 endorses IEEE Std. 497 (with clarifications and exceptions stated in RG 1.97) and the use of the HFE development process to determine the human actions during and following accident scenarios. Specific instruments credited for RG 1.97 compliance are determined as part of the HFE development process as discussed in Section 7.5.

Table 7.1-2

I&C Systems - IEEE Std. 603 Criteria Compliance Cross-Reference

		Q-DCIS																		
		RTIF - NMS PLATFORM							SSLC/ESF PLATFORM										INDEPENDENT CONTROL PLATFORM	
		RTIF						NMS												
IEEE Std. 603 Section	Functions (1)	RTIF	RPS	LD&IS (MSIV Only) (6)	CMS (includes SPTM) (6)	NBS (6)	CRD (6)	NMS (3)	SSLC/ESF (4)	LD&IS (Non-MSIV) (2)&(6)	PRMS	CMS (6)	NBS (includes ADS) (6)	GDCS	ICS	SLC (6)	CBVS (7)	CRD (6)	VBIF	ATWS / SLC (5),(6)&(7)
4.1	Design basis events	7.1.6.6.1.1	7.1.6.6.1.1	7.1.6.6.1.1	7.1.6.6.1.1	7.1.6.6.1.1	7.1.6.6.1.1	7.1.6.6.1.1	7.1.6.6.1.1	7.1.6.6.1.1	7.1.6.6.1.1	7.1.6.6.1.1	7.1.6.6.1.1	7.1.6.6.1.1	7.1.6.6.1.1	7.1.6.6.1.1	7.1.6.6.1.1	7.1.6.6.1.1	7.1.6.6.1.1	7.1.6.6.1.1
4.2	Safety-related functions	7.1.6.6.1.1	7.1.6.6.1.1	7.1.6.6.1.1	7.1.6.6.1.1	7.1.6.6.1.1	7.1.6.6.1.1	7.1.6.6.1.1	7.1.6.6.1.1	7.1.6.6.1.1	7.1.6.6.1.1	7.1.6.6.1.1	7.1.6.6.1.1	7.1.6.6.1.1 7.5.5.3.1	7.1.6.6.1.1 7.5.5.3.1	7.1.6.6.1.1	7.1.6.6.1.1	7.1.6.6.1.1	7.1.6.6.1.1	7.1.6.6.1.1
4.3	Permissive conditions for operating bypasses	7.1.6.6.1.1	7.1.6.6.1.1 7.2.1.3.1	7.1.6.6.1.1 7.3.3.3.1	7.1.6.6.1.1 7.2.3.3.1	7.1.6.6.1.1 7.2.1.3.1 7.3.1.2.3.1 7.3.3.3.1 7.3.5.3.1	7.1.6.6.1.1	7.1.6.6.1.1 7.2.2.3.1	7.1.6.6.1.1 7.3.5.3.1	7.1.6.6.1.1 7.3.3.3.1	7.1.6.6.1.1 7.5.3.3.1	7.1.6.6.1.1 7.5.2.3.1	7.1.6.6.1.1	7.1.6.6.1.1 7.3.1.2.3.1	7.1.6.6.1.1 7.4.4.3.1	7.1.6.6.1.1 7.4.1.3.1	7.1.6.6.1.1	7.1.6.6.1.1	7.1.6.6.1.1 7.3.6.3.1	7.1.6.6.1.1
4.4	Monitored variables, and associated analytical limits	7.1.6.6.1.1	7.1.6.6.1.1	7.1.6.6.1.1	7.1.6.6.1.1	7.1.6.6.1.1	7.1.6.6.1.1	7.1.6.6.1.1	7.1.6.6.1.1	7.1.6.6.1.1	7.1.6.6.1.1	7.1.6.6.1.1	7.1.6.6.1.1	7.1.6.6.1.1	7.1.6.6.1.1	7.1.6.6.1.1	7.1.6.6.1.1	7.1.6.6.1.1	7.1.6.6.1.1	7.1.6.6.1.1
4.5	Minimum criteria for manual actions	7.1.6.6.1.1	7.1.6.6.1.1	7.1.6.6.1.1	7.1.6.6.1.1	7.1.6.6.1.1	7.1.6.6.1.1	7.1.6.6.1.1	7.1.6.6.1.1	7.1.6.6.1.1	7.1.6.6.1.1	7.1.6.6.1.1	7.1.6.6.1.1	7.1.6.6.1.1	7.1.6.6.1.1	7.1.6.6.1.1	7.1.6.6.1.1	7.1.6.6.1.1	7.1.6.6.1.1	7.1.6.6.1.1
4.6	Spatially dependent variables	7.1.6.6.1.1	7.1.6.6.1.1 7.2.1.3.1	7.1.6.6.1.1 7.3.3.3.1	7.1.6.6.1.1 7.2.3.3.1	7.1.6.6.1.1 7.2.1.3.1 7.3.1.2.3.1 7.3.3.3.1 7.3.5.3.1	7.1.6.6.1.1	7.1.6.6.1.1 7.2.2.3.1	7.1.6.6.1.1 7.3.5.3.1 7.4.2.3.1	7.1.6.6.1.1 7.3.3.3.1	7.1.6.6.1.1 7.5.3.3.1	7.1.6.6.1.1 7.5.2.3.1	7.1.6.6.1.1	7.1.6.6.1.1 7.3.1.2.3.1	7.1.6.6.1.1 7.4.4.3.1	7.1.6.6.1.1 7.4.1.3.1	7.1.6.6.1.1	7.1.6.6.1.1	7.1.6.6.1.1 7.3.6.3.1	7.1.6.6.1.1
4.7	Range of transient and steady-state conditions	7.1.6.6.1.1	7.1.6.6.1.1	7.1.6.6.1.1	7.1.6.6.1.1	7.1.6.6.1.1	7.1.6.6.1.1	7.1.6.6.1.1	7.1.6.6.1.1	7.1.6.6.1.1	7.1.6.6.1.1	7.1.6.6.1.1	7.1.6.6.1.1	7.1.6.6.1.1	7.1.6.6.1.1	7.1.6.6.1.1	7.1.6.6.1.1	7.1.6.6.1.1	7.1.6.6.1.1	7.1.6.6.1.1
4.8	Adverse environmental conditions	7.1.6.6.1.1	7.1.6.6.1.1	7.1.6.6.1.1	7.1.6.6.1.1	7.1.6.6.1.1	7.1.6.6.1.1	7.1.6.6.1.1	7.1.6.6.1.1	7.1.6.6.1.1	7.1.6.6.1.1	7.1.6.6.1.1	7.1.6.6.1.1	7.1.6.6.1.1	7.1.6.6.1.1	7.1.6.6.1.1	7.1.6.6.1.1	7.1.6.6.1.1	7.1.6.6.1.1	7.1.6.6.1.1
4.9	Reliability methods	7.1.6.6.1.1	7.1.6.6.1.1	7.1.6.6.1.1	7.1.6.6.1.1	7.1.6.6.1.1	7.1.6.6.1.1	7.1.6.6.1.1	7.1.6.6.1.1	7.1.6.6.1.1	7.1.6.6.1.1	7.1.6.6.1.1	7.1.6.6.1.1	7.1.6.6.1.1	7.1.6.6.1.1	7.1.6.6.1.1	7.1.6.6.1.1	7.1.6.6.1.1	7.1.6.6.1.1	7.1.6.6.1.1
4.10	DBE critical times / conditions	7.1.6.6.1.1	7.1.6.6.1.1	7.1.6.6.1.1	7.1.6.6.1.1	7.1.6.6.1.1	7.1.6.6.1.1	7.1.6.6.1.1	7.1.6.6.1.1	7.1.6.6.1.1	7.1.6.6.1.1	7.1.6.6.1.1	7.1.6.6.1.1	7.1.6.6.1.1	7.1.6.6.1.1	7.1.6.6.1.1	7.1.6.6.1.1	7.1.6.6.1.1	7.1.6.6.1.1	7.1.6.6.1.1
4.11	Equipment protective provisions	7.1.6.6.1.1	7.1.6.6.1.1	7.1.6.6.1.1	7.1.6.6.1.1	7.1.6.6.1.1	7.1.6.6.1.1	7.1.6.6.1.1	7.1.6.6.1.1	7.1.6.6.1.1	7.1.6.6.1.1	7.1.6.6.1.1	7.1.6.6.1.1	7.1.6.6.1.1	7.1.6.6.1.1	7.1.6.6.1.1	7.1.6.6.1.1	7.1.6.6.1.1	7.1.6.6.1.1	7.1.6.6.1.1

Table 7.1-2

I&C Systems - IEEE Std. 603 Criteria Compliance Cross-Reference

		Q-DCIS																		
		RTIF - NMS PLATFORM							SSLC/ESF PLATFORM										INDEPENDENT CONTROL PLATFORM	
		RTIF						NMS												
IEEE Std. 603 Section	Functions (1)	RTIF	RPS	LD&IS (MSIV Only) (6)	CMS (includes SPTM) (6)	NBS (6)	CRD (6)	NMS (3)	SSLC/ESF (4)	LD&IS (Non-MSIV) (2)&(6)	PRMS	CMS (6)	NBS (includes ADS) (6)	GDCS	ICS	SLC (6)	CBVS (7)	CRD (6)	VBIF	ATWS / SLC (5),(6)&(7)
4.12	Special design basis	7.1.6.6.1.1	7.1.6.6.1.1	7.1.6.6.1.1	7.1.6.6.1.1	7.1.6.6.1.1	7.1.6.6.1.1	7.1.6.6.1.1	7.1.6.6.1.1	7.1.6.6.1.1	7.1.6.6.1.1	7.1.6.6.1.1	7.1.6.6.1.1	7.1.6.6.1.1	7.1.6.6.1.1	7.1.6.6.1.1	7.1.6.6.1.1	7.1.6.6.1.1	7.1.6.6.1.1	7.1.6.6.1.1
5.1	Single failure criterion	7.1.6.6.1.2	7.1.6.6.1.2	7.1.6.6.1.2	7.1.6.6.1.2	7.1.6.6.1.2	7.1.6.6.1.2	7.1.6.6.1.2	7.1.6.6.1.2	7.1.6.6.1.2	7.1.6.6.1.2	7.1.6.6.1.2	7.1.6.6.1.2	7.1.6.6.1.2	7.1.6.6.1.2	7.1.6.6.1.2	7.1.6.6.1.2	7.1.6.6.1.2	7.1.6.6.1.2	7.1.6.6.1.2
5.2	Completion of protective action	7.1.6.6.1.3	7.1.6.6.1.3 7.2.1.3.1	7.1.6.6.1.3 7.3.3.3.1	7.1.6.6.1.3 7.2.3.3.1	7.1.6.6.1.3 7.2.1.3.1 7.3.1.2.3.1 7.3.3.3.1 7.3.5.3.1	7.1.6.6.1.3	7.1.6.6.1.3 7.2.2.3.1	7.1.6.6.1.3 7.3.5.3.1 7.4.2.3.1	7.1.6.6.1.3 7.3.3.3.1	7.1.6.6.1.3 7.5.3.3.1	7.1.6.6.1.3 7.5.2.3.1	7.1.6.6.1.3	7.1.6.6.1.3 7.3.1.2.3.1	7.1.6.6.1.3 7.4.4.3.1	7.1.6.6.1.3 7.4.1.3.1	7.1.6.6.1.3	7.1.6.6.1.3	7.1.6.6.1.3 7.3.6.3.1	7.1.6.6.1.3
5.3	Quality	7.1.6.6.1.4	7.1.6.6.1.4	7.1.6.6.1.4	7.1.6.6.1.4	7.1.6.6.1.4	7.1.6.6.1.4	7.1.6.6.1.4	7.1.6.6.1.4	7.1.6.6.1.4	7.1.6.6.1.4	7.1.6.6.1.4	7.1.6.6.1.4	7.1.6.6.1.4	7.1.6.6.1.4	7.1.6.6.1.4	7.1.6.6.1.4	7.1.6.6.1.4	7.1.6.6.1.4	7.1.6.6.1.4
5.4	Equipment qualification	7.1.6.6.1.5	7.1.6.6.1.5	7.1.6.6.1.5	7.1.6.6.1.5	7.1.6.6.1.5	7.1.6.6.1.5	7.1.6.6.1.5	7.1.6.6.1.5	7.1.6.6.1.5	7.1.6.6.1.5	7.1.6.6.1.5	7.1.6.6.1.5	7.1.6.6.1.5	7.1.6.6.1.5	7.1.6.6.1.5	7.1.6.6.1.5	7.1.6.6.1.5	7.1.6.6.1.5	7.1.6.6.1.5
5.5	System Integrity	7.1.6.6.1.6	7.1.6.6.1.6	7.1.6.6.1.6	7.1.6.6.1.6	7.1.6.6.1.6	7.1.6.6.1.6	7.1.6.6.1.6	7.1.6.6.1.6	7.1.6.6.1.6	7.1.6.6.1.6	7.1.6.6.1.6	7.1.6.6.1.6	7.1.6.6.1.6	7.1.6.6.1.6	7.1.6.6.1.6	7.1.6.6.1.6	7.1.6.6.1.6	7.1.6.6.1.6	7.1.6.6.1.6
5.6	Independence	7.1.6.6.1.7	7.1.6.6.1.7	7.1.6.6.1.7	7.1.6.6.1.7	7.1.6.6.1.7	7.1.6.6.1.7	7.1.6.6.1.7	7.1.6.6.1.7	7.1.6.6.1.7	7.1.6.6.1.7	7.1.6.6.1.7	7.1.6.6.1.7	7.1.6.6.1.7	7.1.6.6.1.7	7.1.6.6.1.7	7.1.6.6.1.7	7.1.6.6.1.7	7.1.6.6.1.7	7.1.6.6.1.7
5.7	Capability for test and calibration	7.1.6.6.1.8	7.1.6.6.1.8 7.2.1.3.1	7.1.6.6.1.8 7.3.3.3.1	7.1.6.6.1.8 7.2.3.3.1	7.1.6.6.1.8 7.2.1.3.1 7.3.1.2.3.1 7.3.3.3.1 7.3.5.3.1	7.1.6.6.1.8	7.1.6.6.1.8 7.2.2.3.1	7.1.6.6.1.8 7.3.5.3.1 7.4.2.3.1	7.1.6.6.1.8 7.3.3.3.1	7.1.6.6.1.8 7.5.3.3.1	7.1.6.6.1.8 7.5.2.3.1	7.1.6.6.1.8	7.1.6.6.1.8 7.3.1.2.3.1	7.1.6.6.1.8 7.4.4.3.1	7.1.6.6.1.8 7.4.1.3.1	7.1.6.6.1.8	7.1.6.6.1.8	7.1.6.6.1.8 7.3.6.3.1	7.1.6.6.1.8
5.8	Information displays	7.1.6.6.1.9	7.1.6.6.1.9	7.1.6.6.1.9	7.1.6.6.1.9	7.1.6.6.1.9	7.1.6.6.1.9	7.1.6.6.1.9	7.1.6.6.1.9	7.1.6.6.1.9	7.1.6.6.1.9	7.1.6.6.1.9	7.1.6.6.1.9	7.1.6.6.1.9	7.1.6.6.1.9	7.1.6.6.1.9	7.1.6.6.1.9	7.1.6.6.1.9	7.1.6.6.1.9	7.1.6.6.1.9
5.9	Control of Access	7.1.6.6.1.10	7.1.6.6.1.10	7.1.6.6.1.10	7.1.6.6.1.10	7.1.6.6.1.10	7.1.6.6.1.10	7.1.6.6.1.10	7.1.6.6.1.10	7.1.6.6.1.10	7.1.6.6.1.10	7.1.6.6.1.10	7.1.6.6.1.10	7.1.6.6.1.10	7.1.6.6.1.10	7.1.6.6.1.10	7.1.6.6.1.10	7.1.6.6.1.10	7.1.6.6.1.10	7.1.6.6.1.10
5.10.	Repair	7.1.6.6.1.11	7.1.6.6.1.11	7.1.6.6.1.11	7.1.6.6.1.11	7.1.6.6.1.11	7.1.6.6.1.11	7.1.6.6.1.11	7.1.6.6.1.11	7.1.6.6.1.11	7.1.6.6.1.11	7.1.6.6.1.11	7.1.6.6.1.11	7.1.6.6.1.11	7.1.6.6.1.11	7.1.6.6.1.11	7.1.6.6.1.11	7.1.6.6.1.11	7.1.6.6.1.11	7.1.6.6.1.11
5.11	Identification	7.1.6.6.1.12	7.1.6.6.1.12	7.1.6.6.1.12	7.1.6.6.1.12	7.1.6.6.1.12	7.1.6.6.1.12	7.1.6.6.1.12	7.1.6.6.1.12	7.1.6.6.1.12	7.1.6.6.1.12	7.1.6.6.1.12	7.1.6.6.1.12	7.1.6.6.1.12	7.1.6.6.1.12	7.1.6.6.1.12	7.1.6.6.1.12	7.1.6.6.1.12	7.1.6.6.1.12	7.1.6.6.1.12
5.12	Auxiliary features	7.1.6.6.1.13	7.1.6.6.1.13	7.1.6.6.1.13	7.1.6.6.1.13	7.1.6.6.1.13	7.1.6.6.1.13	7.1.6.6.1.13	7.1.6.6.1.13	7.1.6.6.1.13	7.1.6.6.1.13	7.1.6.6.1.13	7.1.6.6.1.13	7.1.6.6.1.13	7.1.6.6.1.13	7.1.6.6.1.13	7.1.6.6.1.13	7.1.6.6.1.13	7.1.6.6.1.13	7.1.6.6.1.13
5.13	Multi-unit stations	7.1.6.6.1.14	7.1.6.6.1.14	7.1.6.6.1.14	7.1.6.6.1.14	7.1.6.6.1.14	7.1.6.6.1.14	7.1.6.6.1.14	7.1.6.6.1.14	7.1.6.6.1.14	7.1.6.6.1.14	7.1.6.6.1.14	7.1.6.6.1.14	7.1.6.6.1.14	7.1.6.6.1.14	7.1.6.6.1.14	7.1.6.6.1.14	7.1.6.6.1.14	7.1.6.6.1.14	7.1.6.6.1.14
5.14	Human factors considerations	7.1.6.6.1.15	7.1.6.6.1.15	7.1.6.6.1.15	7.1.6.6.1.15	7.1.6.6.1.15	7.1.6.6.1.15	7.1.6.6.1.15	7.1.6.6.1.15	7.1.6.6.1.15	7.1.6.6.1.15	7.1.6.6.1.15	7.1.6.6.1.15	7.1.6.6.1.15	7.1.6.6.1.15	7.1.6.6.1.15	7.1.6.6.1.15	7.1.6.6.1.15	7.1.6.6.1.15	7.1.6.6.1.15
5.15	Reliability	7.1.6.6.1.16	7.1.6.6.1.16	7.1.6.6.1.16	7.1.6.6.1.16	7.1.6.6.1.16	7.1.6.6.1.16	7.1.6.6.1.16	7.1.6.6.1.16	7.1.6.6.1.16	7.1.6.6.1.16	7.1.6.6.1.16	7.1.6.6.1.16	7.1.6.6.1.16	7.1.6.6.1.16	7.1.6.6.1.16	7.1.6.6.1.16	7.1.6.6.1.16	7.1.6.6.1.16	7.1.6.6.1.16

Table 7.1-2

I&C Systems - IEEE Std. 603 Criteria Compliance Cross-Reference

		Q-DCIS																		
		RTIF - NMS PLATFORM							SSLC/ESF PLATFORM										INDEPENDENT CONTROL PLATFORM	
		RTIF						NMS												
IEEE Std. 603 Section	Functions (1)	RTIF	RPS	LD&IS (MSIV Only) (6)	CMS (includes SPTM) (6)	NBS (6)	CRD (6)	NMS (3)	SSLC/ESF (4)	LD&IS (Non-MSIV) (2)&(6)	PRMS	CMS (6)	NBS (includes ADS) (6)	GDCS	ICS	SLC (6)	CBVS (7)	CRD (6)	VBIF	ATWS / SLC (5),(6)&(7)
6.1	Automatic Control	7.1.6.6.1.17	7.1.6.6.1.17	7.1.6.6.1.17	7.1.6.6.1.17	7.1.6.6.1.17	7.1.6.6.1.17	7.1.6.6.1.17	7.1.6.6.1.17	7.1.6.6.1.17	7.1.6.6.1.17	7.1.6.6.1.17	7.1.6.6.1.17	7.1.6.6.1.17	7.1.6.6.1.17	7.1.6.6.1.17	7.1.6.6.1.17	7.1.6.6.1.17	7.1.6.6.1.17	7.1.6.6.1.17
6.2	Manual control	7.1.6.6.1.18	7.1.6.6.1.18 7.2.1.3.1	7.1.6.6.1.18 7.3.3.3.1	7.1.6.6.1.18 7.2.3.3.1	7.1.6.6.1.18 7.2.1.3.1 7.3.1.2.3.1 7.3.3.3.1 7.3.5.3.1	7.1.6.6.1.18	7.1.6.6.1.18 7.2.2.3.1	7.1.6.6.1.18 7.3.5.3.1 7.4.2.3.1	7.1.6.6.1.18 7.3.3.3.1	7.1.6.6.1.18 7.5.3.3.1	7.1.6.6.1.18 7.5.2.3.1	7.1.6.6.1.18	7.1.6.6.1.18 7.3.1.2.3.1	7.1.6.6.1.18 7.4.4.3.1	7.1.6.6.1.18 7.4.1.3.1	7.1.6.6.1.18	7.1.6.6.1.18	7.1.6.6.1.18 7.3.6.3.1	7.1.6.6.1.18
6.3	Interaction between the sense and command features and other systems	7.1.6.6.1.19	7.1.6.6.1.19	7.1.6.6.1.19	7.1.6.6.1.19	7.1.6.6.1.19	7.1.6.6.1.19	7.1.6.6.1.19	7.1.6.6.1.19	7.1.6.6.1.19	7.1.6.6.1.19	7.1.6.6.1.19	7.1.6.6.1.19	7.1.6.6.1.19	7.1.6.6.1.19	7.1.6.6.1.19	7.1.6.6.1.19	7.1.6.6.1.19	7.1.6.6.1.19	7.1.6.6.1.19
6.4	Derivation of system inputs	7.1.6.6.1.20	7.1.6.6.1.20 7.2.1.3.1	7.1.6.6.1.20 7.3.3.3.1	7.1.6.6.1.20 7.2.3.3.1	7.1.6.6.1.20 7.2.1.3.1 7.3.1.2.3.1 7.3.3.3.1 7.3.5.3.1	7.1.6.6.1.20	7.1.6.6.1.20 7.2.2.3.1	7.1.6.6.1.20 7.3.5.3.1 7.4.2.3.1	7.1.6.6.1.20 7.3.3.3.1	7.1.6.6.1.20 7.5.3.3.1	7.1.6.6.1.20 7.5.2.3.1	7.1.6.6.1.20	7.1.6.6.1.20 7.3.1.2.3.1	7.1.6.6.1.20 7.4.4.3.1	7.1.6.6.1.20 7.4.1.3.1	7.1.6.6.1.20	7.1.6.6.1.20	7.1.6.6.1.20 7.3.6.3.1	7.1.6.6.1.20
6.5	Capability for testing and calibration	7.1.6.6.1.21	7.1.6.6.1.21 7.2.1.3.1	7.1.6.6.1.21 7.3.3.3.1	7.1.6.6.1.21 7.2.3.3.1	7.1.6.6.1.21 7.2.1.3.1 7.3.1.2.3.1 7.3.3.3.1 7.3.5.3.1	7.1.6.6.1.21	7.1.6.6.1.21 7.2.2.3.1	7.1.6.6.1.21 7.3.5.3.1 7.4.2.3.1	7.1.6.6.1.21 7.3.3.3.1	7.1.6.6.1.21 7.5.3.3.1	7.1.6.6.1.21 7.5.2.3.1	7.1.6.6.1.21	7.1.6.6.1.21 7.3.1.2.3.1	7.1.6.6.1.21 7.4.4.3.1	7.1.6.6.1.21 7.4.1.3.1	7.1.6.6.1.21	7.1.6.6.1.21	7.1.6.6.1.21 7.3.6.3.1	7.1.6.6.1.21
6.6	Operating bypasses	7.1.6.6.1.22	7.1.6.6.1.22 7.2.1.3.1	7.1.6.6.1.22 7.3.3.3.1	7.1.6.6.1.22 7.2.3.3.1	7.1.6.6.1.22 7.2.1.3.1 7.3.1.2.3.1 7.3.3.3.1 7.3.5.3.1	7.1.6.6.1.22	7.1.6.6.1.22 7.2.2.3.1	7.1.6.6.1.22 7.3.5.3.1 7.4.2.3.1	7.1.6.6.1.22 7.3.3.3.1	7.1.6.6.1.22 7.5.3.3.1	7.1.6.6.1.22 7.5.2.3.1	7.1.6.6.1.22	7.1.6.6.1.22 7.3.1.2.3.1	7.1.6.6.1.22 7.4.4.3.1	7.1.6.6.1.22 7.4.1.3.1	7.1.6.6.1.22	7.1.6.6.1.22	7.1.6.6.1.22 7.3.6.3.1	7.1.6.6.1.22
6.7	Maintenance bypass	7.1.6.6.1.23	7.1.6.6.1.23 7.2.1.3.1	7.1.6.6.1.23 7.3.3.3.1	7.1.6.6.1.23 7.2.3.3.1	7.1.6.6.1.23 7.2.1.3.1 7.3.1.2.3.1 7.3.3.3.1 7.3.5.3.1	7.1.6.6.1.23	7.1.6.6.1.23 7.2.2.3.1	7.1.6.6.1.23 7.3.5.3.1 7.4.2.3.1	7.1.6.6.1.23 7.3.3.3.1	7.1.6.6.1.23 7.5.3.3.1	7.1.6.6.1.23 7.5.2.3.1	7.1.6.6.1.23	7.1.6.6.1.23 7.3.1.2.3.1	7.1.6.6.1.23 7.4.4.3.1	7.1.6.6.1.23 7.4.1.3.1	7.1.6.6.1.23	7.1.6.6.1.23	7.1.6.6.1.23 7.3.6.3.1	7.1.6.6.1.23
6.8	Setpoints	7.1.6.6.1.24	7.1.6.6.1.24	7.1.6.6.1.24	7.1.6.6.1.24	7.1.6.6.1.24	7.1.6.6.1.24	7.1.6.6.1.24	7.1.6.6.1.24	7.1.6.6.1.24	7.1.6.6.1.24	7.1.6.6.1.24	7.1.6.6.1.24	7.1.6.6.1.24	7.1.6.6.1.24	7.1.6.6.1.24	7.1.6.6.1.24	7.1.6.6.1.24	7.1.6.6.1.24	7.1.6.6.1.24

Table 7.1-2

I&C Systems - IEEE Std. 603 Criteria Compliance Cross-Reference

		Q-DCIS																		
		RTIF - NMS PLATFORM							SSLC/ESF PLATFORM										INDEPENDENT CONTROL PLATFORM	
		RTIF						NMS												
IEEE Std. 603 Section	Functions (1)	RTIF	RPS	LD&IS (MSIV Only) (6)	CMS (includes SPTM) (6)	NBS (6)	CRD (6)	NMS (3)	SSLC/ESF (4)	LD&IS (Non-MSIV) (2)&(6)	PRMS	CMS (6)	NBS (includes ADS) (6)	GDCS	ICS	SLC (6)	CBVS (7)	CRD (6)	VBIF	ATWS / SLC (5),(6)&(7)
7.1	Automatic Control	7.1.6.6.1.17	7.1.6.6.1.17	7.1.6.6.1.17	7.1.6.6.1.17	7.1.6.6.1.17	7.1.6.6.1.17	7.1.6.6.1.17	7.1.6.6.1.17	7.1.6.6.1.17	7.1.6.6.1.17	7.1.6.6.1.17	7.1.6.6.1.17	7.1.6.6.1.17	7.1.6.6.1.17	7.1.6.6.1.17	7.1.6.6.1.17	7.1.6.6.1.17	7.1.6.6.1.17	7.1.6.6.1.17
7.2	Manual control	7.1.6.6.1.18	7.1.6.6.1.18 7.2.1.3.1	7.1.6.6.1.18 7.3.3.3.1	7.1.6.6.1.18 7.2.3.3.1	7.1.6.6.1.18 7.2.1.3.1 7.3.1.2.3.1 7.3.3.3.1 7.3.5.3.1	7.1.6.6.1.18	7.1.6.6.1.18 7.2.2.3.1	7.1.6.6.1.18 7.3.5.3.1 7.4.2.3.1	7.1.6.6.1.18 7.3.3.3.1	7.1.6.6.1.18 7.5.3.3.1	7.1.6.6.1.18 7.5.2.3.1	7.1.6.6.1.18	7.1.6.6.1.18 7.3.1.2.3.1	7.1.6.6.1.18 7.4.4.3.1	7.1.6.6.1.18 7.4.1.3.1	7.1.6.6.1.18	7.1.6.6.1.18	7.1.6.6.1.18 7.3.6.3.1	7.1.6.6.1.18
7.3	Completion of protective action	7.1.6.6.1.3	7.1.6.6.1.3 7.2.1.3.1	7.1.6.6.1.3 7.3.3.3.1	7.1.6.6.1.3 7.2.3.3.1	7.1.6.6.1.3 7.2.1.3.1 7.3.1.2.3.1 7.3.3.3.1 7.3.5.3.1	7.1.6.6.1.3	7.1.6.6.1.3 7.2.2.3.1	7.1.6.6.1.3 7.3.5.3.1 7.4.2.3.1	7.1.6.6.1.3 7.3.3.3.1	7.1.6.6.1.3 7.5.3.3.1	7.1.6.6.1.3 7.5.2.3.1	7.1.6.6.1.3	7.1.6.6.1.3 7.3.1.2.3.1	7.1.6.6.1.3 7.4.4.3.1	7.1.6.6.1.3 7.4.1.3.1	7.1.6.6.1.3	7.1.6.6.1.3	7.1.6.6.1.3 7.3.6.3.1	7.1.6.6.1.3
7.4	Operating bypass	7.1.6.6.1.22	7.1.6.6.1.22 7.2.1.3.1	7.1.6.6.1.22 7.3.3.3.1	7.1.6.6.1.22 7.2.3.3.1	7.1.6.6.1.22 7.2.1.3.1 7.3.1.2.3.1 7.3.3.3.1 7.3.5.3.1	7.1.6.6.1.22	7.1.6.6.1.22 7.2.2.3.1	7.1.6.6.1.22 7.3.5.3.1 7.4.2.3.1	7.1.6.6.1.22 7.3.3.3.1	7.1.6.6.1.22 7.5.3.3.1	7.1.6.6.1.22 7.5.2.3.1	7.1.6.6.1.22	7.1.6.6.1.22 7.3.1.2.3.1	7.1.6.6.1.22 7.4.4.3.1	7.1.6.6.1.22 7.4.1.3.1	7.1.6.6.1.22	7.1.6.6.1.22	7.1.6.6.1.22 7.3.6.3.1	7.1.6.6.1.22
7.5	Maintenance bypass	7.1.6.6.1.23	7.1.6.6.1.23 7.2.1.3.1	7.1.6.6.1.23 7.3.3.3.1	7.1.6.6.1.23 7.2.3.3.1	7.1.6.6.1.23 7.2.1.3.1 7.3.1.2.3.1 7.3.3.3.1 7.3.5.3.1	7.1.6.6.1.23	7.1.6.6.1.23 7.2.2.3.1	7.1.6.6.1.23 7.3.5.3.1 7.4.2.3.1	7.1.6.6.1.23 7.3.3.3.1	7.1.6.6.1.23 7.5.3.3.1	7.1.6.6.1.23 7.5.2.3.1	7.1.6.6.1.23	7.1.6.6.1.23 7.3.1.2.3.1	7.1.6.6.1.23 7.4.4.3.1	7.1.6.6.1.23 7.4.1.3.1	7.1.6.6.1.23	7.1.6.6.1.23	7.1.6.6.1.23 7.3.6.3.1	7.1.6.6.1.23
8.1	Electrical power sources	7.1.6.6.1.25	7.1.6.6.1.25	7.1.6.6.1.25	7.1.6.6.1.25	7.1.6.6.1.25	7.1.6.6.1.25	7.1.6.6.1.25	7.1.6.6.1.25	7.1.6.6.1.25	7.1.6.6.1.25	7.1.6.6.1.25	7.1.6.6.1.25	7.1.6.6.1.25	7.1.6.6.1.25	7.1.6.6.1.25	7.1.6.6.1.25	7.1.6.6.1.25	7.1.6.6.1.25	7.1.6.6.1.25
8.2	Non-electrical power sources	7.1.6.6.1.26	7.1.6.6.1.26 7.2.1.3.1	7.1.6.6.1.26 7.3.3.3.1	7.1.6.6.1.26 7.2.3.3.1	7.1.6.6.1.26 7.2.1.3.1 7.3.1.2.3.1 7.3.3.3.1 7.3.5.3.1	7.1.6.6.1.26	7.1.6.6.1.26 7.2.2.3.1	7.1.6.6.1.26 7.3.5.3.1 7.4.2.3.1	7.1.6.6.1.26 7.3.3.3.1	7.1.6.6.1.26 7.5.3.3.1	7.1.6.6.1.26 7.5.2.3.1	7.1.6.6.1.26	7.1.6.6.1.26 7.3.1.2.3.1	7.1.6.6.1.26 7.4.4.3.1	7.1.6.6.1.26 7.4.1.3.1	7.1.6.6.1.26	7.1.6.6.1.26	7.1.6.6.1.26 7.3.6.3.1	7.1.6.6.1.26

Table 7.1-2

I&C Systems - IEEE Std. 603 Criteria Compliance Cross-Reference

		Q-DCIS																		
		RTIF - NMS PLATFORM							SSLC/ESF PLATFORM										INDEPENDENT CONTROL PLATFORM	
		RTIF						NMS												
IEEE Std. 603 Section	Functions (1)	RTIF	RPS	LD&IS (MSIV Only) (6)	CMS (includes SPTM) (6)	NBS (6)	CRD (6)	NMS (3)	SSLC/ESF (4)	LD&IS (Non-MSIV) (2)&(6)	PRMS	CMS (6)	NBS (includes ADS) (6)	GDCS	ICS	SLC (6)	CBVS (7)	CRD (6)	VBIF	ATWS / SLC (5),(6)&(7)
8.3	Maintenance Bypass	7.1.6.6.1.27	7.1.6.6.1.27 7.2.1.3.1	7.1.6.6.1.27 7.3.3.3.1	7.1.6.6.1.27 7.2.3.3.1	7.1.6.6.1.27 7.2.1.3.1 7.3.1.2.3.1 7.3.3.3.1 7.3.5.3.1	7.1.6.6.1.27	7.1.6.6.1.27 7.2.2.3.1	7.1.6.6.1.27 7.3.5.3.1 7.4.2.3.1	7.1.6.6.1.27 7.3.3.3.1	7.1.6.6.1.27 7.5.3.3.1	7.1.6.6.1.27 7.5.2.3.1	7.1.6.6.1.27	7.1.6.6.1.27 7.3.1.2.3.1	7.1.6.6.1.27 7.4.4.3.1	7.1.6.6.1.27 7.4.1.3.1	7.1.6.6.1.27	7.1.6.6.1.27	7.1.6.6.1.27 7.3.6.3.1	7.1.6.6.1.27

Notes:

(1) The IEEE Std. 603 criteria apply to the safety-related portions of the systems identified in this table.

(2) LD&IS (non-MSIV) controls the safety-related actuators (for the isolation valves and dampers) associated with the following nonsafety-related systems: RWCU/SDC, FAPCS, EFDS, CIS, CWS, CMS, HPNSS, RBVS, and FBVS. RWCU/SDC provides safety-related sensor inputs to LD&IS (non-MSIV). The regulatory requirements associated with these actuators and sensors are addressed as part of LD&IS.

(3) NMS has Q and N parts. The Q parts are SRNM, LPRM, APRM, and OPRM. The N parts are AFIP and MRBM.

(4) SSLC/ESF includes the RSS, MCRP, and safety-related VDUs.

(5) Includes the NBS sensors associate with ATWS/SLC.

(6) The following safety-related systems have logic implemented on multiple platforms in support of their protective functions: CMS, CRD, LD&IS, NBS and SLC. Refer to DCD Sections 7.2, 7.3, 7.4, and 7.5 for detailed descriptions of the system functions.

(7) CBVS includes the CRHS and CRHAVS subsystems and EFUs.

~~Table 7.1-2~~

~~Section Roadmap of I&C Systems Conformance to Evaluation of IEEE Std. 603 Specific Criteria Compliance~~

~~Subject~~		~~Instrumentation & Control Systems~~	~~Reactor Trip Systems~~	~~Engineered Safety Features~~	~~Safe Shutdown Systems~~	~~Information Systems~~	~~Interlock Systems~~	~~Control Systems~~	~~Diverse Instrumentation and Control Systems~~
~~IEEE Std. 603 Section~~	~~Functions [1]~~	~~Q-DCIS, N-DCIS~~	~~RPS, NMS [2], SPTM [3], MSIV (for LD&IS)~~	~~SSLC/ESF ECCS [4], PCCS [5], LD&IS (except MSIV) CRHS, VBIF~~	~~Q and N SS (that is, SLC, RSS, RWCU / SDC (N), ICS)~~	~~Q and N IS (that is, Q IC Displays, PAM (QN), CMS (QN), PRMS (N), ARMS (N), PMS (QN), WTDVBM)~~	~~HP/LP SI (N)~~	~~NBS (QN), RC&IS (QN), FWCS (N), PAS (N), SB&PC (N), NMS [(2)] (N) CIS (N)~~	~~ATWS (N), DIC* (N), DMCD* (N), CMF* defenses within SSD* (N), D* against CMF (N)~~
~~4~~	~~Safety System Designation~~	~~7.1.2.1~~ ~~7.1.3.1.1~~ ~~7.1.6.6.1.1~~ ~~Table 15.0-2~~ ~~Table 15.1-2~~ ~~Table 15.1-3~~	~~7.1.6.6.1.1~~ ~~Table 15.0-2~~ ~~Table 15.1-2~~ ~~Table 15.1-3~~	~~7.1.6.6.1.1~~ ~~Table 15.0-2~~ ~~Table 15.1-2~~ ~~Table 15.1-3~~	~~7.1.6.6.1.1~~ ~~Table 15.0-2~~ ~~Table 15.1-2~~ ~~Table 15.1-3~~	~~7.1.6.6.1.1~~ ~~Table 15.0-2~~ ~~Table 15.1-2~~ ~~Table 15.1-3~~	~~-~~	~~7.1.6.6.1.1~~ ~~Table 15.0-2~~ ~~Table 15.1-2~~ ~~Table 15.1-3~~	~~Table 15.0-2~~ ~~Table 15.1-2~~ ~~Table 15.1-3~~
~~4.1~~ ~~4.2~~ ~~4.3~~ ~~4.4~~ ~~4.5~~	~~DBE, safety-related functions, permissive conditions for operating bypasses, monitored variables, analytical limits, minimum criteria for manual actions~~	~~7.1.6.6.1.1~~ ~~7.1.2.1~~ ~~7.1.3.1.1~~	~~7.2.1.1 (RPS)~~ ~~7.2.1.2.4.1~~ ~~7.2.1.2.4.2~~ ~~Table 15.0-2~~	~~7.3.1.2.1 (GDCS)~~ ~~7.4.4.1 (ICS)~~ ~~7.4.4.5~~ ~~7.4.1.1 (SLC)~~ ~~7.3.6.1 (VBIF)~~	~~7.4.1.1 (SLC)~~ ~~7.4.1.2~~ ~~7.4.2.2.2 (RSS)~~ ~~7.4.3.1.1 (RWCU/SDC)~~ ~~7.4.4.1 (ICS)~~ ~~7.4.4.5~~	~~7.5.2.1 (CMS)~~	~~-~~	~~7.7.1.1.1 (NBS)~~	~~-~~
~~4.6~~	~~Spatially dependent variables, identification, number and location~~	~~-~~	~~-~~	~~-~~	~~-~~	~~-~~	~~-~~	~~-~~	~~-~~
~~4.7~~	~~Range of transient and steady-state conditions~~	~~-~~	~~-~~	~~-~~	~~-~~	~~-~~	~~-~~	~~-~~	~~-~~

~~Table 7.1-2~~

~~Section Roadmap of I&C Systems Conformance to Evaluation of IEEE Std. 603 Specific Criteria Compliance~~

~~Subject~~		~~Instrumentation & Control Systems~~	~~Reactor Trip Systems~~	~~Engineered Safety Features~~	~~Safe Shutdown Systems~~	~~Information Systems~~	~~Interlock Systems~~	~~Control Systems~~	~~Diverse Instrumentation and Control Systems~~
~~IEEE Std. 603 Section~~	~~Functions [1]~~	~~Q-DCIS, N-DCIS~~	~~RPS, NMS [2], SPTM [3], MSIV (for LD&IS)~~	~~SSLC/ESF ECCS [4], PCCS [5], LD&IS (except MSIV) CRHS, VBIF~~	~~Q and N SS (that is, SLC, RSS, RWCU / SDC (N), ICS)~~	~~Q and N IS (that is, Q IC Displays, PAM (QN), CMS (QN), PRMS (N), ARMS (N), PMS (QN), WTDVBM)~~	~~HP/LP SI (N)~~	~~NBS (QN), RC&IS (QN), FWCS (N), PAS (N), SB&PC (N), NMS [(2)] (N) CIS (N)~~	~~ATWS (N), DIC* (N), DMCD* (N), CMF* defenses within SSD* (N), D* against CMF (N)~~
~~4.8~~	~~Adverse environmental conditions~~	~~7.1.2.1 7.1.3.1.1~~	~~-~~	~~7.4.4.3 (ICS) 7.4.1.1 (SLC) 7.4.1.3 7.4.4.3 (ICS)~~	~~7.4.1.1 (SLC) 7.4.1.3 7.4.4.3 (ICS)~~	~~-~~	~~-~~	~~7.7.1.1.1 (NBS) 7.7.1.3~~	~~-~~
~~4.10~~	~~DBE critical times / conditions~~	~~7.1.2.1 7.1.3.1.1~~	~~-~~	~~-~~	~~7.4.1.1 (SLC) 7.4.4.3 (ICS)~~	~~-~~	~~-~~	~~7.7.1.1.1 (NBS)~~	~~-~~
~~4.12~~	~~Special design basis~~	~~-~~	~~-~~	~~7.3.1.1.4 (ADS)~~		~~-~~	~~-~~	~~-~~	~~-~~

~~Table 7.1-2~~

~~Section Roadmap of I&C Systems Conformance to Evaluation of IEEE Std. 603 Specific Criteria Compliance~~

~~Subject~~		~~Instrumentation & Control Systems~~	~~Reactor Trip Systems~~	~~Engineered Safety Features~~	~~Safe Shutdown Systems~~	~~Information Systems~~	~~Interlock Systems~~	~~Control Systems~~	~~Diverse Instrumentation and Control Systems~~
~~IEEE Std. 603 Section~~	~~Functions [1]~~	~~Q-DCIS, N-DCIS~~	~~RPS, NMS [2], SPTM [3], MSIV (for LD&IS)~~	~~SSLC/ESF ECCS [4], PCCS [5], LD&IS (except MSIV) CRHS, VBIF~~	~~Q and N SS (that is, SLC, RSS, RWCU / SDC (N), ICS)~~	~~Q and N IS (that is, Q IC Displays, PAM (QN), CMS (QN), PRMS (N), ARMS (N), PMS (QN), WTDVBM)~~	~~HP/LP SI (N)~~	~~NBS (QN), RC&IS (QN), FWCS (N), PAS (N), SB&PC (N), NMS [(2)] (N) CIS (N)~~	~~ATWS (N), DIC* (N), DMCD* (N), CMF* defenses within SSD* (N), D* against CMF (N)~~
~~5.1~~	~~Single failure criterion~~	~~7.1.3.3~~ ~~7.1.6.6.1.2~~	~~7.1.6.6.1.2~~ ~~7.2.1.1 (RPS)~~ ~~7.2.1.2.4~~ ~~7.2.1.3.4~~ ~~7.2.2.2.4.3 (NMS)~~ ~~7.2.2.2.4.6~~ ~~7.2.2.2.6.4~~	~~7.1.6.6.1.2~~ ~~7.3.1.1.2 (ADS)~~ ~~7.3.1.1.3~~ ~~7.3.1.1.3.4~~ ~~7.3.1.2.1 (GDCS)~~ ~~7.3.1.2.2~~ ~~7.3.1.2.3~~ ~~7.3.1.2.3.4~~ ~~7.3.3.1 (LD&IS)~~ ~~7.3.3.2~~ ~~7.3.4.2 (CRHS)~~ ~~7.3.5.2.2 (SSLC/ESF)~~ ~~7.3.5.3.4~~ ~~7.4.4.3 (ICS)~~ ~~7.3.6.1 (VBIF)~~ ~~7.3.6.3.4 (VBIF)~~ ~~7.4.1.3 (SLC)~~	~~7.1.6.6.1.2~~ ~~7.4.1.3 (SLC)~~ ~~7.4.2.2.1 (RSS)~~ ~~7.4.2.3.1~~ ~~7.4.2.3.3~~ ~~7.4.4.3 (ICS)~~	~~7.1.6.6.1.2~~	~~-~~	~~7.1.6.6.1.2~~ ~~7.7.1.3 (NBS)~~	~~-~~

~~Table 7.1-2~~

~~Section Roadmap of I&C Systems Conformance to Evaluation of IEEE Std. 603 Specific Criteria Compliance~~

~~Subject~~		~~Instrumentation & Control Systems~~	~~Reactor Trip Systems~~	~~Engineered Safety Features~~	~~Safe Shutdown Systems~~	~~Information Systems~~	~~Interlock Systems~~	~~Control Systems~~	~~Diverse Instrumentation and Control Systems~~
~~IEEE Std. 603 Section~~	~~Functions [1]~~	~~Q-DCIS, N-DCIS~~	~~RPS, NMS [2], SPTM [3], MSIV (for LD&IS)~~	~~SSLC/ESF ECCS [4], PCCS [5], LD&IS (except MSIV) CRHS, VBIF~~	~~Q and N SS (that is, SLC, RSS, RWCU / SDC (N), ICS)~~	~~Q and N IS (that is, Q IC Displays, PAM (QN), CMS (QN), PRMS (N), ARMS (N), PMS (QN), WTDVBM)~~	~~HP/LP SI (N)~~	~~NBS (QN), RC&IS (QN), FWCS (N), PAS (N), SB&PC (N), NMS [(2)] (N) CIS (N)~~	~~ATWS (N), DIC* (N), DMCD* (N), CMF* defenses within SSD* (N), D* against CMF (N)~~
~~5.2~~	~~Completion of protective action~~	~~7.1.6.6.1.3~~	~~7.1.6.6.1.3 7.2.1.1 (RPS) 7.2.1.3.4~~	~~7.1.6.6.1.3 7.3.1.1.2 (ADS) 7.3.1.2.2 (GDCS) 7.3.3.1 (LD&IS) 7.3.3.3 7.3.5.2.2 (SSLC/ESF) 7.4.1.2.2 (SLC)~~	~~7.1.6.6.1.3 7.4.1.2.2 (SLC)~~	~~7.1.6.6.1.3~~	~~-~~	~~7.1.6.6.1.3~~	~~-~~
~~5.3~~	~~Quality~~	~~7.1.6.6.1.4~~	~~7.1.6.6.1.4~~	~~7.1.6.6.1.4~~	~~7.1.6.6.1.4~~	~~7.1.6.6.1.4~~	~~-~~	~~7.1.6.6.1.4~~	~~-~~
~~5.4~~	~~Equipment qualification~~	~~7.1.6.6.1.5~~	~~7.1.6.6.1.5 7.2.1.3.5 (RPS)~~	~~7.1.6.6.1.5 7.4.1.3 (SLC)~~	~~7.1.6.6.1.5 7.4.1.3 (SLC)~~	~~7.1.6.6.1.5~~	~~-~~	~~7.1.6.6.1.5~~	~~7.8.3 (CMF defenses within SSD)~~
~~5.5~~	~~System Integrity~~	~~7.1.6.6.1.6~~	~~7.1.6.6.1.6~~	~~7.1.6.6.1.6 7.3.4.2 (CRHS)~~	~~7.1.6.6.1.6~~	~~7.1.6.6.1.6~~	~~-~~	~~7.1.6.6.1.6~~	

~~Table 7.1-2~~

~~Section Roadmap of I&C Systems Conformance to Evaluation of IEEE Std. 603 Specific Criteria Compliance~~

~~Subject~~		~~Instrumentation & Control Systems~~	~~Reactor Trip Systems~~	~~Engineered Safety Features~~	~~Safe Shutdown Systems~~	~~Information Systems~~	~~Interlock Systems~~	~~Control Systems~~	~~Diverse Instrumentation and Control Systems~~
~~IEEE Std. 603 Section~~	~~Functions [1]~~	~~Q-DCIS, N-DCIS~~	~~RPS, NMS [2], SPTM [3], MSIV (for LD&IS)~~	~~SSLC/ESF ECCS [4], PCCS [5], LD&IS (except MSIV) CRHS, VBIF~~	~~Q and N SS (that is, SLC, RSS, RWCU / SDC (N), ICS)~~	~~Q and N IS (that is, Q IC Displays, PAM (QN), CMS (QN), PRMS (N), ARMS (N), PMS (QN), WTDVBM)~~	~~HP/LP SI (N)~~	~~NBS (QN), RC&IS (QN), FWCS (N), PAS (N), SB&PC (N), NMS [(2)] (N) CIS (N)~~	~~ATWS (N), DIC* (N), DMCD* (N), CMF* defenses within SSD* (N), D* against CMF (N)~~
~~5.6~~	~~Independence~~	~~7.1.6.6.1.7~~ ~~7.1.3.3~~	~~7.1.6.6.1.7~~ ~~7.2.1.1 (RPS)~~ ~~7.2.1.2.4.1~~ ~~7.2.1.3.1~~ ~~7.2.1.3.4~~ ~~7.2.2.2.4.3 (NMS)~~ ~~7.2.2.2.5.3~~ ~~7.2.2.2.6.4~~ ~~7.2.2.3.1~~ ~~7.2.3.3.1 (SPTM)~~	~~7.1.6.6.1.7~~ ~~7.3.1.1.3.1 (ADS)~~ ~~7.3.1.2.3.1 (GDCS)~~ ~~7.3.3.1 (LD&IS)~~ ~~7.3.3.2~~ ~~7.3.3.3.1~~ ~~7.3.4.2 (CRHS)~~ ~~7.3.5.2.2 (SSLC/ESF)~~ ~~7.4.1.3 (SLC)~~ ~~7.4.4.3.1(ICS)~~ ~~7.3.6.3.1 (VBIF)~~	~~7.1.6.6.1.7~~ ~~7.4.1.3 (SLC)~~ ~~7.4.2.2.1 (RSS)~~ ~~7.4.2.3.1~~ ~~7.4.2.3.3~~ ~~7.4.4.3.1 (ICS)~~	~~7.1.6.6.1.7~~ ~~7.5.2.2 (CMS)~~ ~~7.5.2.3.1~~ ~~7.5.3.3.1 (PRMS)~~	-	~~7.1.6.6.1.7~~ ~~7.7.2.2.7.4 (RC&IS)~~ ~~7.7.3.1.2 (FWCS)~~ ~~7.7.4.2 (PAS)~~ ~~7.7.5.1.2 (SB&PC)~~	~~7.8.3~~ ~~7.8.3.1~~

~~Table 7.1-2~~

~~Section Roadmap of I&C Systems Conformance to Evaluation of IEEE Std. 603 Specific Criteria Compliance~~

~~Subject~~		~~Instrumentation & Control Systems~~	~~Reactor Trip Systems~~	~~Engineered Safety Features~~	~~Safe Shutdown Systems~~	~~Information Systems~~	~~Interlock Systems~~	~~Control Systems~~	~~Diverse Instrumentation and Control Systems~~
~~IEEE Std. 603 Section~~	~~Functions [1]~~	~~Q-DCIS, N-DCIS~~	~~RPS, NMS [2], SPTM [3], MSIV (for LD&IS)~~	~~SSLC/ESF ECCS [4], PCCS [5], LD&IS (except MSIV) CRHS, VBIF~~	~~Q and N SS (that is, SLC, RSS, RWCU / SDC (N), ICS)~~	~~Q and N IS (that is, Q IC Displays, PAM (QN), CMS (QN), PRMS (N), ARMS (N), PMS (QN), WTDVBM)~~	~~HP/LP SI (N)~~	~~NBS (QN), RC&IS (QN), FWCS (N), PAS (N), SB&PC (N), NMS [(2)] (N) CIS (N)~~	~~ATWS (N), DIC* (N), DMCD* (N), CMF* defenses within SSD* (N), D* against CMF (N)~~
~~5.7~~	~~Capability for test and calibration~~	~~7.1.6.6.1.8~~ ~~7.1.3.3~~ ~~7.1.3.4~~ ~~7.1.3.5~~ ~~7.1.6.4~~	~~7.1.6.6.1.8~~ ~~7.2.1.3.4 (RPS)~~ ~~7.2.1.4.1~~	~~7.1.6.6.1.8~~ ~~7.3.1.1.4 (ADS)~~ ~~7.3.1.2.4 (GDCS)~~ ~~7.3.3.1 (LD&IS)~~ ~~7.3.3.4.2~~ ~~7.3.5.4 (SSLC/ESF)~~ ~~7.4.4.4 (ICS)~~ ~~7.4.4.5~~ ~~7.4.1.3 (SLC)~~ ~~7.4.1.4~~ ~~7.3.6.4 (VBIF)~~	~~7.1.6.6.1.8~~ ~~7.4.1.3 (SLC)~~ ~~7.4.1.4~~ ~~7.4.3.4 (RWCU/SDC)~~ ~~7.4.4.4 (ICS)~~ ~~7.4.4.5~~	~~7.1.6.6.1.8~~ ~~7.5.3.4 (PRMS)~~	~~–~~	~~7.1.6.6.1.8~~ ~~7.7.1.4 (NBS)~~	~~-~~

~~Table 7.1-2~~

~~Section Roadmap of I&C Systems Conformance to Evaluation of IEEE Std. 603 Specific Criteria Compliance~~

~~Subject~~		~~Instrumentation & Control Systems~~	~~Reactor Trip Systems~~	~~Engineered Safety Features~~	~~Safe Shutdown Systems~~	~~Information Systems~~	~~Interlock Systems~~	~~Control Systems~~	~~Diverse Instrumentation and Control Systems~~
~~IEEE Std. 603 Section~~	~~Functions [1]~~	~~Q-DCIS, N-DCIS~~	~~RPS, NMS [2], SPTM [3], MSIV (for LD&IS)~~	~~SSLC/ESF ECCS [4], PCCS [5], LD&IS (except MSIV) CRHS, VBIF~~	~~Q and N SS (that is, SLC, RSS, RWCU / SDC (N), ICS)~~	~~Q and N IS (that is, Q IC Displays, PAM (QN), CMS (QN), PRMS (N), ARMS (N), PMS (QN), WTDVBM)~~	~~HP/LP SI (N)~~	~~NBS (QN), RC&IS (QN), FWCS (N), PAS (N), SB&PC (N), NMS [(2)] (N) CIS (N)~~	~~ATWS (N), DIC* (N), DMCD* (N), CMF* defenses within SSD* (N), D* against CMF (N)~~
~~5.8~~	~~Information displays~~	~~7.1.2.6~~ ~~7.1.3.5~~ ~~7.1.6.6.1.9~~	~~7.1.6.6.1.9~~ ~~7.2.1.2.4.3 (RPS)~~ ~~7.2.1.3.1~~ ~~7.2.1.3.4~~ ~~7.2.2.3.1 (NMS)~~ ~~7.2.2.5.1~~	~~7.1.6.6.1.9~~ ~~7.3.1.1.2 (ADS)~~ ~~7.3.1.1.5~~ ~~7.3.1.2.1 (GDCS)~~ ~~7.3.1.2.2~~ ~~7.3.1.2.3.1~~ ~~7.3.1.2.5~~ ~~7.3.3.3.1 (LD&IS)~~ ~~7.3.4.2 (CRHS)~~ ~~7.3.5.3.1 (SSLC/ESF)~~ ~~7.4.4.5 (ICS)~~ ~~7.4.1.3 (SLC)~~ ~~7.4.1.5~~ ~~7.3.6.1 (VBIF)~~ ~~7.3.6.3.1~~ ~~7.3.6.5~~	~~7.1.6.6.1.9~~ ~~7.4.1.3 (SLC)~~ ~~7.4.1.5~~ ~~7.4.2.2.1 (RSS)~~ ~~7.4.4.5 (ICS)~~	~~7.1.6.6.1.9~~ ~~7.5.2.1 (CMS)~~	~~–~~	~~7.1.6.6.1.9~~ ~~7.7.1.5 (NBS)~~	~~-~~
~~5.9~~	~~Control of Access~~	~~7.1.6.6.1.10~~	~~7.1.6.6.1.10~~ ~~7.2.1.1 (RPS)~~	~~7.1.6.6.1.10~~ ~~7.3.3.1 (LD&IS)~~	~~7.1.6.6.1.10~~ ~~7.4.2.2.1 (RSS)~~	~~7.1.6.6.1.10~~	~~-~~	~~7.1.6.6.1.10~~	~~-~~

~~Table 7.1-2~~

~~Section Roadmap of I&C Systems Conformance to Evaluation of IEEE Std. 603 Specific Criteria Compliance~~

~~Subject~~		~~Instrumentation & Control Systems~~	~~Reactor Trip Systems~~	~~Engineered Safety Features~~	~~Safe Shutdown Systems~~	~~Information Systems~~	~~Interlock Systems~~	~~Control Systems~~	~~Diverse Instrumentation and Control Systems~~
~~IEEE Std. 603 Section~~	~~Functions [1]~~	~~Q-DCIS, N-DCIS~~	~~RPS, NMS [2], SPTM [3], MSIV (for LD&IS)~~	~~SSLC/ESF ECCS [4], PCCS [5], LD&IS (except MSIV) CRHS, VBIF~~	~~Q and N SS (that is, SLC, RSS, RWCU / SDC (N), ICS)~~	~~Q and N IS (that is, Q IC Displays, PAM (QN), CMS (QN), PRMS (N), ARMS (N), PMS (QN), WTDVBM)~~	~~HP/LP SI (N)~~	~~NBS (QN), RC&IS (QN), FWCS (N), PAS (N), SB&PC (N), NMS [(2)] (N) CIS (N)~~	~~ATWS (N), DIC* (N), DMCD* (N), CMF* defenses within SSD* (N), D* against CMF (N)~~
~~5.10.~~	~~Repair~~	~~7.1.3.5 7.1.6.6.1.11~~	~~7.1.6.6.1.11 7.2.1.2.4.4 (RPS) 7.2.2.2.4.6 (NMS) 7.2.2.2.6.6~~	~~7.1.6.6.1.11~~	~~7.1.6.6.1.11~~	~~7.1.6.6.1.11~~	~~-~~	~~7.1.6.6.1.11~~	~~-~~
~~5.11~~	~~Identification~~	~~7.1.6.6.1.12~~	~~7.1.6.6.1.12~~	~~7.1.6.6.1.12~~	~~7.1.6.6.1.12~~	~~7.1.6.6.1.12~~	~~-~~	~~7.1.6.6.1.12~~	~~-~~
~~5.12~~	~~Auxiliary features~~	~~7.1.6.6.1.13~~	~~7.1.6.6.1.13 7.2.1.1 (RPS)~~	~~7.1.6.6.1.13 7.4.1.2.1 (SLC)~~	~~7.1.6.6.1.13 7.4.1.2.1 (SLC)~~	~~7.1.6.6.1.13~~	~~—~~	~~7.1.6.6.1.13~~	~~-~~
~~5.13~~	~~Multi-unit stations~~	~~7.1.6.6.1.14~~	~~7.1.6.6.1.14~~	~~7.1.6.6.1.14~~	~~7.1.6.6.1.14~~	~~7.1.6.6.1.14~~	~~-~~	~~7.1.6.6.1.14~~	~~-~~
~~5.14~~	~~Human factors considerations~~	~~7.1.6.6.1.15~~	~~7.1.6.6.1.15~~	~~7.1.6.6.1.15~~	~~7.1.6.6.1.15~~	~~7.1.6.6.1.15~~	~~-~~	~~7.1.6.6.1.15~~	~~-~~
~~5.15~~	~~Reliability~~	~~7.1.6.6.1.16~~	~~7.1.6.6.1.16~~	~~7.1.6.6.1.16~~	~~7.1.6.6.1.16~~	~~7.1.6.6.1.16~~	~~-~~	~~7.1.6.6.1.16~~	~~-~~
~~6.1~~	~~Automatic Control~~	~~7.1.6.6.1.17~~	~~7.1.6.6.1.17~~	~~7.1.6.6.1.17 7.3.1.1.2 (ADS) 7.3.3.1 (LD&IS)~~	~~7.1.6.6.1.17~~	~~7.1.6.6.1.17~~	~~-~~	~~7.1.6.6.1.17~~	~~-~~

~~Table 7.1-2~~

~~Section Roadmap of I&C Systems Conformance to Evaluation of IEEE Std. 603 Specific Criteria Compliance~~

~~Subject~~		~~Instrumentation & Control Systems~~	~~Reactor Trip Systems~~	~~Engineered Safety Features~~	~~Safe Shutdown Systems~~	~~Information Systems~~	~~Interlock Systems~~	~~Control Systems~~	~~Diverse Instrumentation and Control Systems~~
~~IEEE Std. 603 Section~~	~~Functions [1]~~	~~Q-DCIS, N-DCIS~~	~~RPS, NMS [2], SPTM [3], MSIV (for LD&IS)~~	~~SSLC/ESF ECCS [4], PCCS [5], LD&IS (except MSIV) CRHS, VBIF~~	~~Q and N SS (that is, SLC, RSS, RWCU / SDC (N), ICS)~~	~~Q and N IS (that is, Q IC Displays, PAM (QN), CMS (QN), PRMS (N), ARMS (N), PMS (QN), WTDVBM)~~	~~HP/LP SI (N)~~	~~NBS (QN), RC&IS (QN), FWCS (N), PAS (N), SB&PC (N), NMS [(2)] (N) CIS (N)~~	~~ATWS (N), DIC* (N), DMCD* (N), CMF* defenses within SSD* (N), D* against CMF (N)~~
~~6.2~~	~~Manual control~~	~~7.1.6.6.1.18~~	~~7.1.6.6.1.18~~ ~~7.2.1.1 (RPS)~~ ~~7.2.1.3.4~~	~~7.1.6.6.1.18~~ ~~7.3.1.1.2 (ADS)~~ ~~7.3.1.2.1 (GDCS)~~ ~~7.3.1.2.2~~ ~~7.3.3.3 (LD&IS)~~ ~~7.3.4.2 (CRHS)~~ ~~7.3.5.3.1 (SSLC/ESF)~~ ~~7.4.4.5 (ICS)~~ ~~7.3.6.1 (VBIF)~~	~~7.1.6.6.1.18~~ ~~7.4.4.5 (ICS)~~	~~7.1.6.6.1.18~~	~~-~~	~~7.1.6.6.1.18~~	~~-~~
~~6.3~~	~~Interaction between the sense and command features and other systems~~	~~7.1.3.3~~ ~~7.1.6.6.1.19~~	~~7.1.6.6.1.19~~ ~~7.2.1.3.1 (RPS)~~ ~~7.2.2.3.1 (NMS)~~	~~7.1.6.6.1.19~~ ~~7.4.4.3.1 (ICS)~~	~~7.1.6.6.1.19~~ ~~7.4.2.2.1 (RSS)~~ ~~7.4.2.3.1~~ ~~7.4.2.3.3~~ ~~7.4.4.3.1 (ICS)~~	~~7.1.6.6.1.19~~	~~--~~	~~7.1.6.6.1.19~~	~~-~~
~~6.4~~	~~Derivation of system inputs~~	~~7.1.6.6.1.20~~	~~7.1.6.6.1.20~~	~~7.1.6.6.1.20~~	~~7.1.6.6.1.20~~	~~7.1.6.6.1.20~~	~~-~~	~~7.1.6.6.1.20~~	~~-~~

~~Table 7.1-2~~

~~Section Roadmap of I&C Systems Conformance to Evaluation of IEEE Std. 603 Specific Criteria Compliance~~

~~Subject~~		~~Instrumentation & Control Systems~~	~~Reactor Trip Systems~~	~~Engineered Safety Features~~	~~Safe Shutdown Systems~~	~~Information Systems~~	~~Interlock Systems~~	~~Control Systems~~	~~Diverse Instrumentation and Control Systems~~
~~IEEE Std. 603 Section~~	~~Functions [1]~~	~~Q-DCIS, N-DCIS~~	~~RPS, NMS [2], SPTM [3], MSIV (for LD&IS)~~	~~SSLC/ESF ECCS [4], PCCS [5], LD&IS (except MSIV) CRHS, VBIF~~	~~Q and N SS (that is, SLC, RSS, RWCU / SDC (N), ICS)~~	~~Q and N IS (that is, Q IC Displays, PAM (QN), CMS (QN), PRMS (N), ARMS (N), PMS (QN), WTDVBM)~~	~~HP/LP SI (N)~~	~~NBS (QN), RC&IS (QN), FWCS (N), PAS (N), SB&PC (N), NMS [(2)] (N) CIS (N)~~	~~ATWS (N), DIC* (N), DMCD* (N), CMF* defenses within SSD* (N), D* against CMF (N)~~
~~6.5~~	~~Capability for testing and calibration~~	~~7.1.3.3~~ ~~7.1.3.5~~ ~~7.1.6.6.1.21~~	~~7.1.6.6.1.21~~ ~~7.2.1.3.4 (RPS)~~ ~~7.2.1.4.1~~	~~7.1.6.6.1.21~~ ~~7.3.1.1.4 (ADS)~~ ~~7.3.1.2.4 (GDCS)~~ ~~7.3.3.4.2 (LD&IS)~~ ~~7.3.5.4 (SSLC/ESF)~~ ~~7.4.4.4 (ICS)~~ ~~7.4.4.5~~ ~~7.4.1.3 (SLC)~~ ~~7.3.6.4 (VBIF)~~	~~7.1.6.6.1.21~~ ~~7.4.1.3 (SLC)~~ ~~7.4.3.4 (RWCU/SDC)~~ ~~7.4.4.4 (ICS)~~ ~~7.4.4.5~~	~~7.1.6.6.1.21~~ ~~7.5.2.4 (CMS)~~ ~~7.5.3.4 (PRMS)~~	~~—~~	~~7.1.6.6.1.21~~	~~-~~
~~6.6~~	~~Operating bypasses~~	~~7.1.6.6.1.22~~	~~7.1.6.6.1.22~~ ~~7.2.1.5.2.1 (RPS)~~	~~7.1.6.6.1.22~~	~~7.1.6.6.1.22~~	~~7.1.6.6.1.22~~	~~-~~	~~7.1.6.6.1.22~~	~~-~~
~~6.7~~	~~Maintenance bypass~~	~~7.1.6.6.1.23~~	~~7.1.6.6.1.23~~ ~~7.2.1.2.4 (RPS)~~ ~~7.2.1.5.2.2~~	~~7.1.6.6.1.23~~ ~~7.4.1.3 (SLC)~~	~~7.4.1.3 (SLC)~~	~~-~~	~~-~~	~~-~~	~~-~~

~~Table 7.1-2~~

~~Section Roadmap of I&C Systems Conformance to Evaluation of IEEE Std. 603 Specific Criteria Compliance~~

~~Subject~~		~~Instrumentation & Control Systems~~	~~Reactor Trip Systems~~	~~Engineered Safety Features~~	~~Safe Shutdown Systems~~	~~Information Systems~~	~~Interlock Systems~~	~~Control Systems~~	~~Diverse Instrumentation and Control Systems~~
~~IEEE Std. 603 Section~~	~~Functions [1]~~	~~Q-DCIS, N-DCIS~~	~~RPS, NMS [2], SPTM [3], MSIV (for LD&IS)~~	~~SSLC/ESF ECCS [4], PCCS [5], LD&IS (except MSIV) CRHS, VBIF~~	~~Q and N SS (that is, SLC, RSS, RWCU / SDC (N), ICS)~~	~~Q and N IS (that is, Q IC Displays, PAM (QN), CMS (QN), PRMS (N), ARMS (N), PMS (QN), WTDVBM)~~	~~HP/LP SI (N)~~	~~NBS (QN), RC&IS (QN), FWCS (N), PAS (N), SB&PC (N), NMS [(2)] (N) CIS (N)~~	~~ATWS (N), DIC* (N), DMCD* (N), CMF* defenses within SSD* (N), D* against CMF (N)~~
~~6.8~~	~~Setpoints~~	~~7.1.6.6.1.24~~	~~7.1.6.6.1.24~~ ~~7.2.2.1.1.1 (NMS)~~ ~~7.2.2.2.4.5~~ ~~7.2.2.2.4.6~~	~~7.1.6.6.1.24~~ ~~7.3.3.1 (LD&IS)~~	~~7.1.6.6.1.24~~	~~7.1.6.6.1.24~~	~~-~~	~~7.1.6.6.1.24~~	~~-~~
~~7.1~~	~~Automatic Control~~	~~7.1.6.6.1.17~~	~~7.1.6.6.1.17~~	~~7.1.6.6.1.17~~ ~~7.3.1.1.2 (ADS)~~	~~7.1.6.6.1.17~~	~~7.1.6.6.1.17~~	~~-~~	~~7.1.6.6.1.17~~	~~-~~
~~7.2~~	~~Manual control~~	~~7.1.6.6.1.18~~	~~7.1.6.6.1.18~~	~~7.1.6.6.1.18~~ ~~7.3.1.1.2 (ADS)~~ ~~7.3.1.2.1 (GDCS)~~ ~~7.3.1.2.2~~ ~~7.3.3.2 (LD&IS)~~ ~~7.3.3.3 (LD&IS)~~ ~~7.3.4.2 (CRHS)~~ ~~7.3.5.3.1 (SSLC/ESF)~~ ~~7.4.4.5 (ICS)~~ ~~7.3.6.1 (VBIF)~~	~~7.1.6.6.1.18~~ ~~7.4.4.5 (ICS)~~	~~7.1.6.6.1.18~~	~~–~~	~~7.1.6.6.1.18~~	~~-~~

~~Table 7.1-2~~

~~Section Roadmap of I&C Systems Conformance to Evaluation of IEEE Std. 603 Specific Criteria Compliance~~

~~Subject~~		~~Instrumentation & Control Systems~~	~~Reactor Trip Systems~~	~~Engineered Safety Features~~	~~Safe Shutdown Systems~~	~~Information Systems~~	~~Interlock Systems~~	~~Control Systems~~	~~Diverse Instrumentation and Control Systems~~
~~IEEE Std. 603 Section~~	~~Functions [1]~~	~~Q-DCIS, N-DCIS~~	~~RPS, NMS [2], SPTM [3], MSIV (for LD&IS)~~	~~SSLC/ESF ECCS [4], PCCS [5], LD&IS (except MSIV) CRHS, VBIF~~	~~Q and N SS (that is, SLC, RSS, RWCU / SDC (N), ICS)~~	~~Q and N IS (that is, Q IC Displays, PAM (QN), CMS (QN), PRMS (N), ARMS (N), PMS (QN), WTDVBM)~~	~~HP/LP SI (N)~~	~~NBS (QN), RC&IS (QN), FWCS (N), PAS (N), SB&PC (N), NMS [(2)] (N) CIS (N)~~	~~ATWS (N), DIC* (N), DMCD* (N), CMF* defenses within SSD* (N), D* against CMF (N)~~
~~7.3~~	~~Completion of protective action~~	~~-~~ ~~7.1.6.6.1.3~~	~~-~~	~~7.3.1.2.1 (GDCS)~~ ~~7.3.6.1 (VBIF)~~	~~-~~	~~-~~	~~-~~	~~-~~	~~-~~
~~7.4~~	~~Operating bypass~~	~~7.1.6.6.1.22~~	~~7.1.6.6.1.22~~ ~~7.2.1.5.2.1 (RPS)~~	~~7.1.6.6.1.22~~	~~7.1.6.6.1.22~~	~~7.1.6.6.1.22~~	~~-~~	~~7.1.6.6.1.22~~	~~-~~
~~7.5~~	~~Maintenance bypass~~	~~7.1.6.6.1.23~~	~~7.1.6.6.1.23~~ ~~7.2.1.2.4 (RPS)~~ ~~7.2.1.5.2.2~~	~~7.1.6.6.1.23~~	~~-~~	~~-~~	~~-~~	~~-~~	~~-~~
~~8.1~~	~~Electrical power sources~~	~~7.1.3.3~~ ~~7.1.6.6.1.25~~	~~7.1.6.6.1.25~~	~~7.1.6.6.1.25~~ ~~7.4.4.3 (ICS)~~ ~~7.4.1.2.1 (SLC)~~	~~7.1.6.6.1.25~~ ~~7.4.1.2.1 (SLC)~~ ~~7.4.4.3 (ICS)~~	~~7.1.6.6.1.25~~	~~-~~	~~7.1.6.6.1.25~~	~~-~~
~~8.2~~	~~Non-electrical power sources~~	~~7.1.6.6.1.26~~	~~-~~	~~7.4.1.2.1 (SLC)~~	~~7.4.1.2.1 (SLC)~~	~~-~~	~~-~~	~~-~~	~~-~~
~~8.3~~	~~Maintenance Bypass~~	~~7.1.6.6.1.27~~	~~-~~	~~-~~	~~-~~	~~-~~	~~-~~	~~-~~	~~-~~

~~Table 7.1-2~~

~~Section Roadmap of I&C Systems Conformance to Evaluation of IEEE Std. 603 Specific Criteria Compliance~~

~~Subject~~		~~Instrumentation & Control Systems~~	~~Reactor Trip Systems~~	~~Engineered Safety Features~~	~~Safe Shutdown Systems~~	~~Information Systems~~	~~Interlock Systems~~	~~Control Systems~~	~~Diverse Instrumentation and Control Systems~~
~~IEEE Std. 603 Section~~	~~Functions [1]~~	~~Q-DCIS, N-DCIS~~	~~RPS, NMS [2], SPTM [3], MSIV (for LD&IS)~~	~~SSLC/ESF ECCS [4], PCCS [5], LD&IS (except MSIV) CRHS, VBIF~~	~~Q and N SS (that is, SLC, RSS, RWCU / SDC (N), ICS)~~	~~Q and N IS (that is, Q IC Displays, PAM (QN), CMS (QN), PRMS (N), ARMS (N), PMS (QN), WTDVBM)~~	~~HP/LP SI (N)~~	~~NBS (QN), RC&IS (QN), FWCS (N), PAS (N), SB&PC (N), NMS [(2)] (N) CIS (N)~~	~~ATWS (N), DIC* (N), DMCD* (N), CMF* defenses within SSD* (N), D* against CMF (N)~~

~~1.All systems are safety-related (Q) unless shown as nonsafety-related (N)~~

~~2.NMS has Q and N parts. The Q parts are SRNM, LPRM, APRM, and OPRM. The N parts are AFIP and MRBM.~~

~~3.SPTM is part of the RTS, ref. 7.2.3.~~

~~4.The SSLC/ESF ECCS comprises the ADS, GDCS, ICS, and SLC, ref. 7.3.1.~~

~~5.Passive system which does not require any control system interface to perform its safety-related function~~

~~* CMF: Common Mode Failure~~
~~DIC: Diverse Instrumentation and Control~~
~~DMCD: Diverse Manual Controls and Displays~~
~~PMS: Pool Monitoring Subsystems~~
~~SSD: Safety-Related System Design~~
~~D: Defense~~
~~WTDVBM: Wetwell to Drywell Vacuum Breaker Monitoring~~
~~IS: Information Systems~~
~~SS: Safe Shutdown~~
~~VBIF: Vacuum Breaker Isolation Function~~

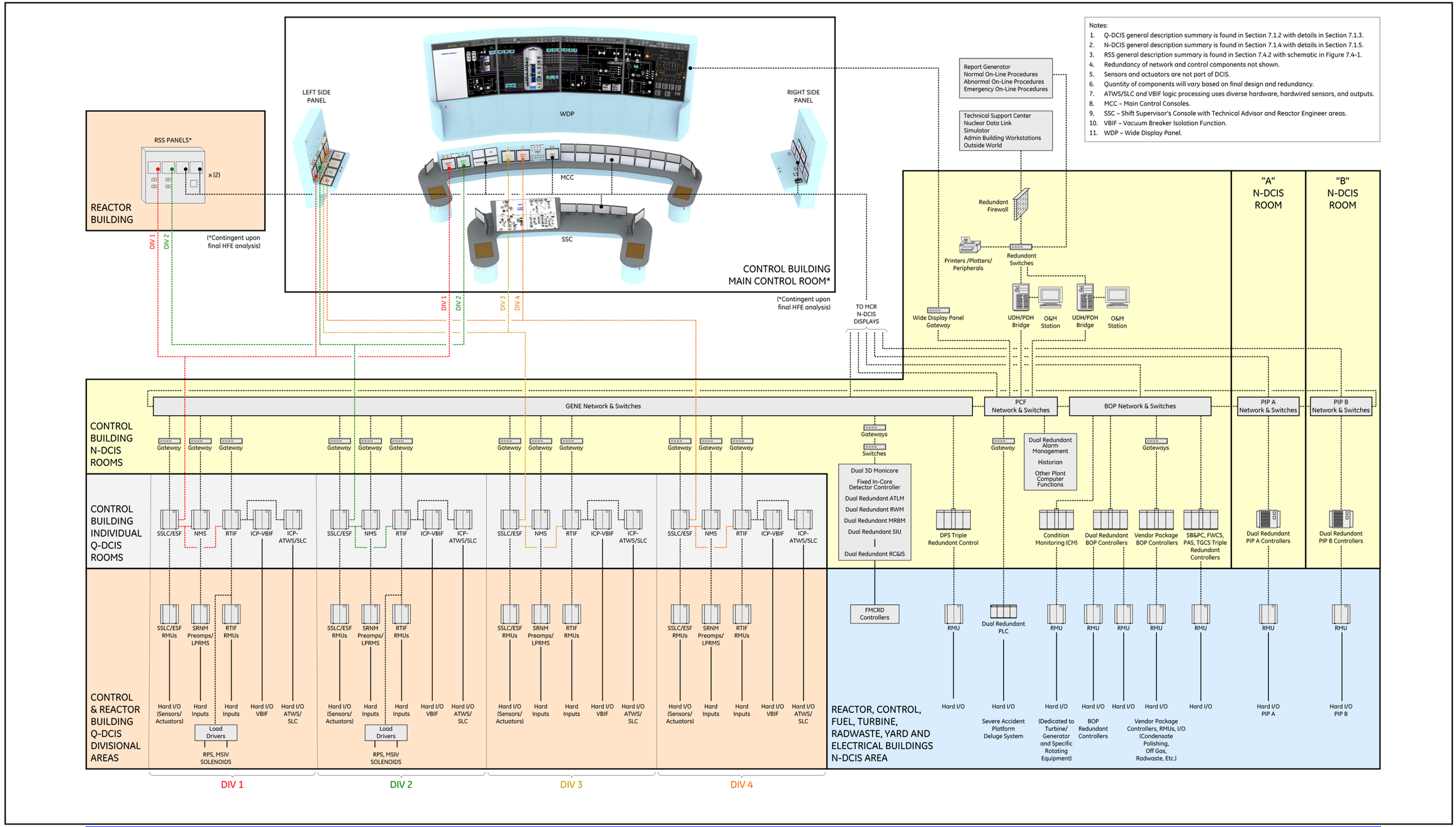
Notes:
1. Q-DCIS general description summary is found in Section 7.1.2 with details in Section 7.1.3.
2. N-DCIS general description summary is found in Section 7.1.4 with details in Section 7.1.5.
3. RSS general description summary is found in Section 7.4.2 with schematic in Figure 7.4-1.
4. Redundancy of network and control components not shown.
5. Sensors and actuators are not part of DCIS.
6. Quantity of components will vary based on final design and redundancy.
7. ATWS/SLC and VBIF logic processing uses diverse hardware, hardwired sensors, and outputs.
8. MCC – Main Control Consoles.
9. SSC – Shift Supervisor's Console with Technical Advisor and Reactor Engineer areas.
10. VBIF – Vacuum Breaker Isolation Function.
11. WDP – Wide Display Panel.
REACTOR BUILDING
RSS PANELS*
x (2)
(*Contingent upon final HFE analysis)
CONTROL BUILDING MAIN CONTROL ROOM*
LEFT SIDE PANEL
WDP
MCC
SSC
RIGHT SIDE PANEL
(*Contingent upon final HFE analysis)
DIV 1
DIV 2
DIV 3
DIV 4
Report Generator
Normal On-Line Procedures
Abnormal On-Line Procedures
Emergency On-Line Procedures
Technical Support Center
Nuclear Data Link
Simulator
Admin Building Workstations
Outside World
"A" N-DCIS ROOM
"B" N-DCIS ROOM
Redundant Firewall
Printers /Plotters/ Peripherals
Redundant Switches
Wide Display Panel Gateway
UDH/PDH Bridge
O&M Station
UDH/PDH Bridge
O&M Station
TO MCR N-DCIS DISPLAYS
CONTROL BUILDING N-DCIS ROOMS
GENE Network & Switches
PCF Network & Switches
BOP Network & Switches
PIP A Network & Switches
PIP B Network & Switches
Gateway
Gateways
Switches
Dual 3D Monicore
Fixed In-Core Detector Controller
Dual Redundant ATLM
Dual Redundant RWM
Dual Redundant MRBM
Dual Redundant SIU
Dual Redundant RC&IS
Dual Redundant Alarm Management
Historian
Other Plant Computer Functions
CONTROL BUILDING INDIVIDUAL Q-DCIS ROOMS
SSLC/ESF
NMS
RTIF
ICP-VBIF
ICP-ATWS/SLC
DPS Triple Redundant Control
Condition Monitoring (CM)
Dual Redundant BOP Controllers
Vendor Package BOP Controllers
SB&PC, FWCS, PAS, TGCS Triple Redundant Controllers
Dual Redundant PIP A Controllers
Dual Redundant PIP B Controllers
CONTROL & REACTOR BUILDING Q-DCIS DIVISIONAL AREAS
SSLC/ESF RMUs
SRNM Preamps/ LPRMS
RTIF RMUs
Hard I/O (Sensors/ Actuators)
Hard Inputs
Hard I/O VBIF
Hard I/O ATWS/ SLC
Load Drivers
RPS, MSIV SOLENOIDS
FMCRD Controllers
RMU
Dual Redundant PLC
Hard I/O
Severe Accident Platform Deluge System
(Dedicated to Turbine/ Generator and Specific Rotating Equipment)
BOP Redundant Controllers
Vendor Package Controllers, RMUs, I/O (Condensate Polishing, Off Gas, Radwaste, Etc.)
Hard I/O PIP A
Hard I/O PIP B
REACTOR, CONTROL, FUEL, TURBINE, RADWASTE, YARD AND ELECTRICAL BUILDINGS N-DCIS AREA
DIV 1
DIV 2
DIV 3
DIV 4

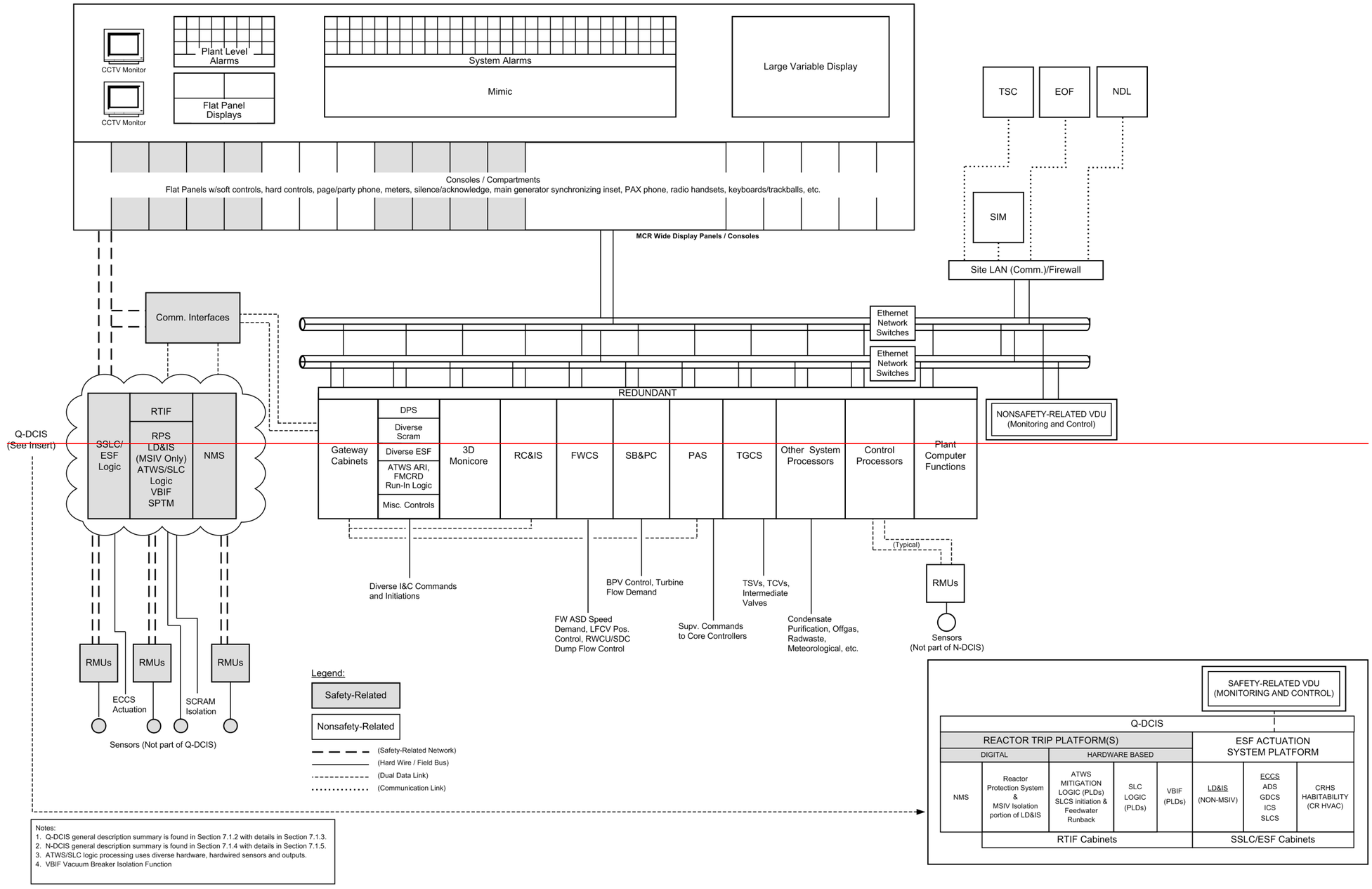

Notes:
1. Q-DCIS general description summary is found in Section 7.1.2 with details in Section 7.1.3.
2. N-DCIS general description summary is found in Section 7.1.4 with details in Section 7.1.5.
3. ATWS/SLC logic processing uses diverse hardware, hardwired sensors and outputs.
4. VBIF Vacuum Breaker Isolation Function

Figure 7.1-1. ~~ESBWR Instrumentation and Control~~ Simplified Network/Functional ~~Block~~ Diagram of DCIS

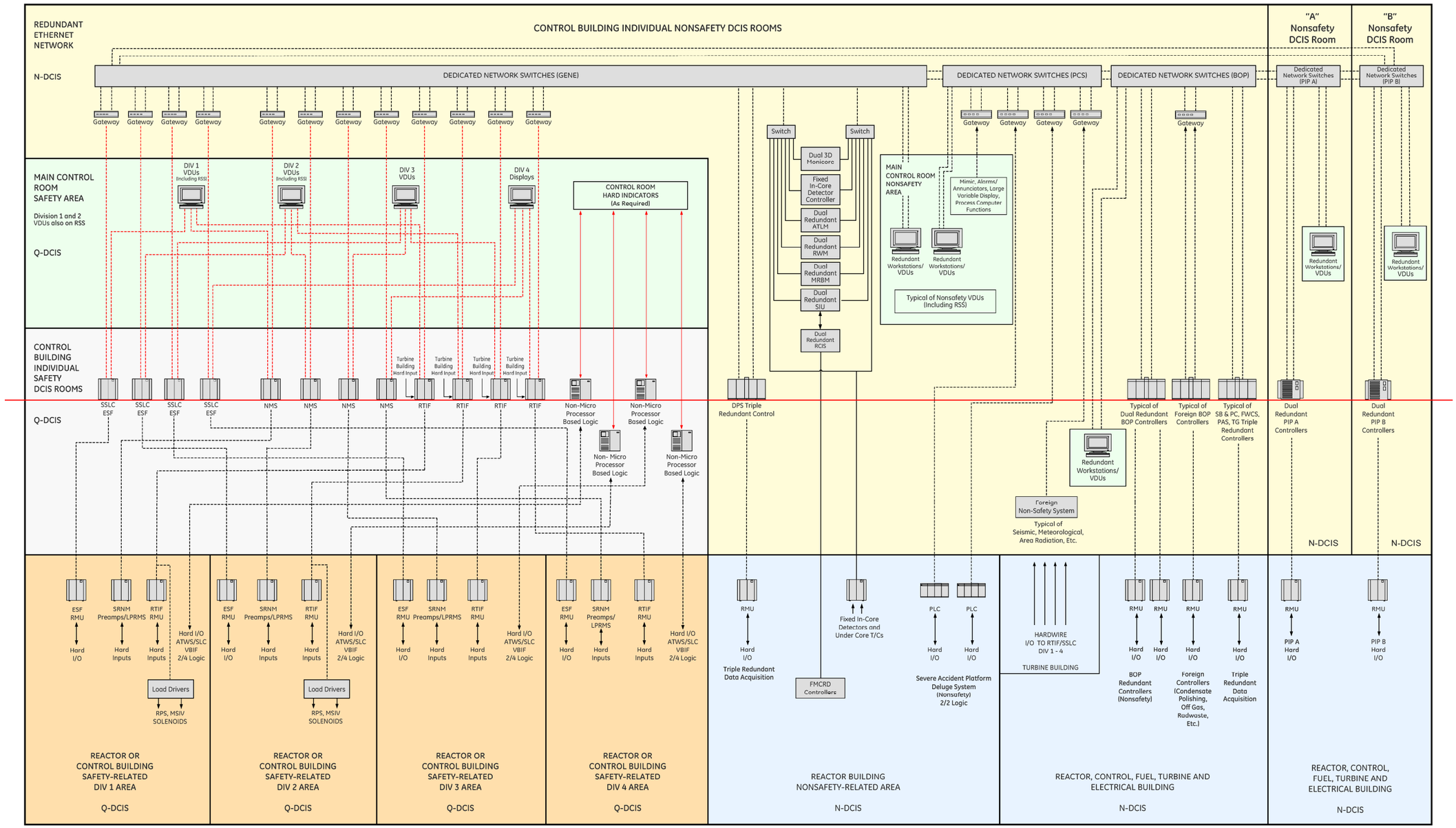

Figure 7.1-2. Deleted~~ESBWR Distributed Control and Information System (DCIS) Functional Network Diagram~~

Safety Category	Safety-Related			Nonsafety-Related						
	Q-DCIS			N-DCIS						
Platform/Network Segment	RTIF NMS	SSLC/ESF	Independent Control Platform	GENE		PIP A/B	BOP		PCF	
Architecture	Divisional	Divisional	Divisional	Triple Redundant (DPS)	Dual Redundant	Dual Redundant	Triple Redundant	Dual Redundant	Workstations	PLC (Deluge)

Diversity Strategy

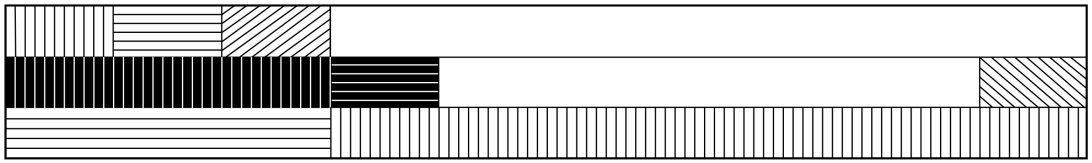

NOTE: Crosshatching denotes different platforms or networks.

Safety Category	Safety-Related		Nonsafety-Related						
	Q-DCIS		N-DCIS						
System Families	RTIF NMS	SSLC/ESF	GENE		BOP SYSTEMS		PIP SYSTEMS	PCF	SEVERE ACCIDENT
Architecture	Divisional	Divisional	Triple Redundant	Dual Redundant	Triple Redundant	Dual Redundant	Dual Redundant	Workstations **	PLCs
Systems/ Subsystems	RPS LD&IS (MSIV) NMS ATWS/SLC* VBIF++ CMS+ (SPTM)	ICS ADS (SRV/DPV) GDCS SLC LD&IS (Non-MSIV) CRHS CMS+	DPS (RPS ECCS Backup)	3D Monicore RC&IS ATLM RWM MRBM SPDS Logic	FWCS, PAS (Automation) SB&PC, TGCS	Turbine Generator Auxiliaries Electrical System CIRC TCCWS Chillers	PIP A, PIP B CRDS RWCU/SDC FAPCS RCCWS Electrical System SDGs Chillers	HMI Historian AMS PMC Functions PCD	Deluge System (GDCS Subsystem)

* Diverse (Discrete Programmable Logic)
\+ Diverse Sensor Inputs
** Dual redundant as necessary
++ VBIF Vacuum Breaker Isolation Function (Discrete Programmable Logic)

Diversity Strategy

Note: Crosshatching denotes different system families and architectures. Within RTIF, ATWS/SLC logic and VBIF use hardware diverse from the RTIF, NMS, and SSLC/ESF system families as indicated above.
Shading is for readability only.

Figure 7.1-4. ESBWR Hardware/Software (Architecture) Diversity Diagram

7.2.1.3.3 Staff Requirements Memorandum

Item II.Q of SECY-93-087, Defense Against Common-Mode Failures in Digital Instrument and Control Systems:

- Conformance: The Reactor Trip (Protection) System design conforms to Item II.Q of SECY-93-087 NRC Branch Technical Position (BTP HICB-19) by the implementation of an additional Diverse Instrumentation and Control System described in Section 7.8.

7.2.1.3.4 Regulatory Guides

RG 1.22, Periodic Testing of Protection System Actuation Functions - This includes conformance to BTP HICB-8:

- Conformance: The system is capable of being tested, from sensor device to final actuator device, during plant operation. The tests must be performed in overlapping stages so an actual reactor scram would not occur as a result of the testing. ~~The portions of the protection systems subject to periodic testing are designed in accordance with IEEE Std. 603, Sections 5.7 and 6.5, which supersedes IEEE Std. 279~~

RG 1.47, Bypassed and Inoperable Status Indication for Nuclear Power Plant Safety Systems**:**

- Conformance: Automatic indication that a system is out of service is provided in the MCR~~ (IEEE Std. 603, Section 5.8)~~. Indicators show which part of a system is not operable and which division is bypassed. Annunciator test switches are provided in the MCR.

  Individual indicators are arranged together in the MCR to indicate which function of the system is out of service, bypassed, or otherwise inoperable. These automatic indicators remain available, and cannot be cleared until the function is operable~~ (IEEE Std. 603, Sections 5.2 and 5.8)~~.

  A manual switch or push button is provided for manual bypass actuation, which annunciates out-of-service conditions~~ (IEEE Std. 603, Section 5.8)~~.

  These display provisions serve to supplement administrative controls and aid the operator in assessing the availability of component and system-level protective actions~~ (IEEE Std. 603, Section 5.8)~~. These displays do not perform a safety-related function~~ (IEEE Std. 603, Section 5.7)~~.

  System out-of-service alarm circuits are electrically isolated from the plant safety-related systems to prevent adverse effects~~ (IEEE Std. 603, Section 5.7)~~.

  Testing is included on a periodic basis when equipment associated with the display is tested.

RG 1.53, Application of the Single-Failure Criterion to Nuclear Power Plant Protection Systems:

- Conformance: The RPS is organized into four physically and electrically-isolated divisions that use the principles of independence and redundancy for the single failure

criterion as defined by IEEE Std. 379, Section 4, and IEEE Std. 603, Section 5.1; additionally, the design meets N-2 conditions. Analyses complying with IEEE Std. 379 will be used to confirm the safety-related systems designs' conformance to the single-failure criterion. ~~Compliance with RG 1.53 is satisfied by specifying, designing, and constructing the RPS to meet the single-failure criterion of IEEE Std. 603, Section 5.1, and IEEE Std. 379. Redundant sensors are used and the logic is arranged to ensure that a failure in a sensing element, decision logic, or an actuator does not prevent protective action. Separate channels are employed so a fault affecting one channel does not prevent the other channels from operating properly.~~

RG 1.62, Manual Initiation of Protective Actions:

- Conformance: Means are provided for manual initiation of reactor scram through the use of two control switches and the Reactor Mode Switch ~~(IEEE Std. 603, Section 6.2)~~. Reactor scram is accomplished by operation of both pushbutton switches, or by placing the Reactor Mode Switch in the Shutdown position. These controls are located on the MCR console.

  The common equipment required for initiation of both manual scram and automatic scram is limited to actuator load power sources, actuator loads, and cabling between the two. There is no shared trip or scram logic equipment for manual scram and automatic scram ~~(IEEE Std. 603, Sections 5.6 and 6.2)~~. No single failure in the manual, automatic, or common portions of the protection system would prevent initiation of reactor scram by manual or automatic means.

  Manual initiation of reactor scram, once initiated, goes to completion as required by IEEE Std. 603, Section 5.2.

RG 1.75, Physical Independence of Electric Systems:

- Conformance: The RPS design complies with the criteria set forth in IEEE Std. 603, Section 5.6, and RG 1.75~~, which endorses IEEE Std. 384~~. Safety-related circuits and safety-related associated circuits are identified and separated from redundant and nonsafety-related circuits. Isolation devices are provided where an interface exists between redundant safety-related divisions and between safety-related or safety-related associated circuits and nonsafety-related circuits. See Subsection 8.3.1.4.1 for RPS separation requirements.

RG 1.89, Environmental Qualification of Certain Electric Equipment Important to Safety for Nuclear Power Plants:

- Conformance: The RPS design conforms to RG 1.89. See Table 3.11-1 (Electrical and Mechanical Equipment for Environmental Qualification).

RG 1.97, Criteria for Accident Monitoring Instrumentation for Nuclear Power Plants:

- Conformance: The ESBWR I&C conforms to RG 1.97. Specific instruments credited for RG 1.97 compliance are determined as part of the HFE development process as discussed in Section 7.5.

implementation of additional Diverse Instrumentation and Control System capabilities, described in Section 7.8.

7.2.2.3.4 Regulatory Guides

RG 1.22, Periodic Testing of Protection System Actuation Functions:

- Conformance: The NMS design conforms to RG 1.22.

RG 1.47, Bypassed and Inoperable Status Indication for Nuclear Power Plant Safety Systems:

- Conformance: The NMS design conforms to RG 1.47.

RG 1.53, Application of the Single-Failure Criterion to Nuclear Power Protection Systems:

- Conformance: The NMS is organized into four physically and electrically-isolated divisions that use the principles of independence and redundancy to conform to the single failure criterion as defined by IEEE Std. 379, Section 4, and IEEE Std. 603, Section 5.1; additionally, the design meets N-2 conditions. Analyses complying with IEEE Std. 379 will be used to confirm the safety-related system designs' conformance to the single-failure criterion.~~The NMS design conforms to RG 1.53.~~

RG 1.75, Physical Independence of Electric Systems:

- Conformance: The NMS design conforms to RG 1.75 as described in Subsections 8.3.1.3 and 8.3.1.4.

RG 1.89, Environmental Qualification of Certain Electric Equipment Important to Safety for Nuclear Power Plants:

- Conformance: The NMS design conforms to RG 1.89. See Table 3.11-1 (Electrical and Mechanical Equipment for Environmental Qualification).

RG 1.97, Criteria for Accident Monitoring Instrumentation for Nuclear Power Plants~~Instrumentation for Light-Water-Cooled Nuclear Power Plants To Assess Plant and Environs Conditions During and Following an Accident~~:

- Conformance: The ESBWR I&C conforms to RG 1.97. Specific instruments credited for RG 1.97 compliance are determined as part of the HFE development process as discussed in Section 7.5.~~The NMS design conforms to RG 1.97.~~

RG 1.100, Seismic Qualification of Electric and Mechanical Equipment for Nuclear Power Plants:

- Conformance: The NMS design conforms to RG 1.100. See Table 3.11-1 (Electrical and Mechanical Equipment for Environmental Qualification).

RG 1.105, Instrument Setpoints for Safety-Related Systems:

- Conformance: The NMS design conforms to RG 1.105. Reference 7.2-1 provides a detailed description of the GEH setpoint methodology.

7.2.3.3.2 General Design Criteria

GDC 1, 2, 4, 13, 19, 20, 21, 22, 23, 24, ~~25,~~ and 29:

- Conformance: The SPTM function complies with these GDC.

7.2.3.3.3 Staff Requirements Memorandum

Item II.Q, (Defense Against Common-Mode Failures in Digital Instrument and Control Systems):

- Conformance: The SPTM ~~subsystem design~~function conforms to item II.Q of SECY-93-087 (BTP HICB-19) by the implementation of diverse instrumentation and control~~,~~ described in Section 7.8.

7.2.3.3.4 Regulatory Guides

RG 1.22, Periodic Testing of Protection System Actuation Function:

- Conformance: The SPTM ~~design~~ function conforms to RG 1.22.

RG 1.47, Bypassed and Inoperable Status Indication for Nuclear Power Plant Safety System:

- Conformance: The SPTM ~~design~~ function conforms to RG 1.47.

RG 1.53, Application of the Single-Failure Criterion to Nuclear Power Protection Systems:

- Conformance: ~~The SPTM design conforms to RG 1.53.~~ The SPTM is organized into four physically and electrically-isolated divisions that use the principle of independence and redundancy to conform to the single failure criterion as defined by IEEE Std. 379, Section 4, and IEEE Std. 603, Section 5.1; additionally, the design meets N-2 conditions. Analyses complying with IEEE Std. 379 will be used to confirm the safety-related system designs' conformance to the single-failure criterion.

~~RG 1.62, Manual Initiation of Protective Actions:~~

- ~~Conformance: The SPTM design conforms to RG 1.62.~~

RG 1.75, Physical Independence of Electric Systems:

- Conformance: The SPTM ~~design~~ function conforms to RG 1.75 as described in Subsections 8.3.1.3 and 8.3.1.4.

RG 1.89, Environmental Qualification of Certain Electric Equipment Important to Safety for Nuclear Power Plants:

- Conformance: The SPTM ~~design~~ function conforms to RG 1.89. See Table 3.11-1 (Electrical and Mechanical Equipment for Environmental Qualification).

- Conformance: ~~The ADS design conforms to RG 1.53, IEEE Std. 603, Section 5.1, and IEEE Std. 379.~~ The ADS is organized into four physically and electrically-isolated divisions that use the principles of independence and redundancy to conform to the single failure criterion as defined by IEEE Std. 379, Section 4, and IEEE Std. 603, Section 5.1; additionally, the design meets N-2 conditions. Analyses complying with IEEE Std. 379 will be used to confirm the safety-related system designs' conformance to the single failure criterion.

RG 1.62, Manual Initiation of Protective Actions:

- Conformance: The ADS design conforms to RG 1.62. Manual actuation of ADS requires the operator to actuate at least two dual action switches. This ensures that manual initiation of the ADS is a premeditated act.

RG 1.75, Physical Independence of Electric Systems:

- Conformance: The ADS design conforms to RG 1.75 as described in Subsections 8.3.1.3 and 8.3.1.4.

RG 1.89, Environmental Qualification of Certain Electric Equipment Important to Safety for Nuclear Power Plants:

- Conformance: The ADS design conforms to RG 1.89. See Table 3.11-1 (Electrical and Mechanical Equipment for Environmental Qualification).

RG 1.97, Criteria for Accident Monitoring Instrumentation for Nuclear Power Plants:

- Conformance: The ESBWR I&C conforms to RG 1.97. Specific instruments credited for RG 1.97 compliance are determined as part of the HFE development process as discussed in Section 7.5.

RG 1.100, Seismic Qualification of Electric and Mechanical Equipment for Nuclear Power Plants:

- Conformance: The ADS design conforms to RG 1.100. See Table 3.11-1 (Electrical and Mechanical Equipment for Environmental Qualification).

RG 1.105, Instrument Setpoints for Safety-Related Systems:

- Conformance: The setpoints used to initiate the ADS are consistent with RG 1.105. Because the discrete setpoints in the ADS logic do not drift, most of the variation is expected to be in the process transmitters. Setpoints are continuously monitored and alarmed by the PCF. Reference 7.3-2 provides a detailed description of the GEH setpoint methodology.

RG 1.118, Periodic Testing of Electric Power and Protection Systems:

- Conformance: Periodic testing of the protection systems is performed in accordance with IEE Std. 338, as modified by ~~The ADS design conforms to the guidance of~~ RG 1.118. A full functional test of the ADS is not practical, because a LOCA results if the non-reclosable DPVs are opened. Acceptable reliability of equipment operation is

10 CFR 52.47(a)~~(1)(vii)~~(25), Interface Requirements:

- Conformance: There are no interface requirements for this section.

10 CFR 52.47~~(a)(2)~~, Level of Detail:

- Conformance: The level of detail provided for the GDCS within the DCD conforms to this requirement.

10 CFR 52.47(c)~~(b)~~(2)~~(i)~~, Innovative Means of Accomplishing Safety Functions:

- Conformance: The I&C design does not use innovative means for accomplishing safety functions.

7.3.1.2.3.2 General Design Criteria

GDC 1, 2, 4, 13, 19, 20, 21, 22, 23, ~~and~~ 24, 29, 33, 35, and 37:

- Conformance: The GDCS design complies with these GDCs.

7.3.1.2.3.3 Staff Requirements Memorandum

SECY-93-087, Item II.Q, Defense Against Common-Mode Failures in Digital Instrumentation and Control Systems:

- Conformance: The GDCS design conforms to these criteria by providing diverse I&C, as described in Section 7.8.

7.3.1.2.3.4 Regulatory Guides

RG 1.22, Periodic Testing of Protection System Function:

- Conformance: System logic is tested continually as described in Subsection 7.3.1.2.4. Components are tested periodically during refueling outages. The GDCS design complies with RG 1.22. In the GDCS, the squib valves are not actuated during reactor operation, because their actuation would adversely affect the operation of the plant by resulting in a reactor shutdown.

RG 1.47, Bypassed and Inoperable Status Indication for Nuclear Power Plant Safety:

- Conformance: The GDCS design complies with RG 1.47. Automatic indication is provided in the MCR to inform the operator that the system is inoperable or a division is bypassed.

RG 1.53, Application of the Single-Failure Criterion to Nuclear Power Protection Systems:

- Conformance: ~~The GDCS design complies with RG 1.53, IEEE Std. 603, Section 5.1, and IEEE Std. 379.~~ The GDCS is organized into four physically and electrically-isolated divisions that use the principles of independence and redundancy to conform to the single failure criterion as defined by IEEE Std. 379, Section 4, and IEEE Std. 603, Section 5.1;

additionally, the design meets N-2 conditions. Analyses complying with IEEE Std. 379 will be used to confirm the safety-related system designs' conformance to the single failure criterion.

RG 1.62, Manual Initiation of Protective Actions:

- Conformance: The GDCS design complies with RG 1.62. Each division of the GDCS has a manual actuation switch in the MCR. Initiation of the system requires actuation of two switches to ensure that manual initiation is a premeditated act. There is an interlock between the manual initiation switches and a low reactor-pressure signal. This interlock prevents manual initiation of the system if the RPV is not depressurized.

RG 1.75, Physical Independence of Electric Systems:

- The GDCS design conforms to RG 1.75 as described in Subsections 8.3.1.3 and 8.3.1.4.

RG 1.89, Environmental Qualification of Certain Electric Equipment Important to Safety for Nuclear Power Plants:

- Conformance: The GDCS design conforms to RG 1.89. See Table 3.11-1 (Electrical and Mechanical Equipment for Environmental Qualification).

RG 1.97, Criteria for Accident Monitoring Instrumentation for Nuclear Power Plants:

- Conformance: The ESBWR I&C conforms to RG 1.97. Specific instruments credited for RG 1.97 compliance are determined as part of the HFE development process as discussed in Section 7.5.

RG 1.100, Seismic Qualification of Electric and Mechanical Equipment for Nuclear Power Plants:

- Conformance: The GDCS design conforms to RG 1.100. See Table 3.11-1 (Electrical and Mechanical Equipment for Environmental Qualification).

RG 1.105, Instrument Setpoints for Safety-Related Systems:

- Conformance: The setpoints used to initiate GDCS are established consistent with RG 1.105. Reference 7.3-2 provides a detailed description of the GEH methodology.

RG 1.118, Periodic Testing of Electric Power and Protection Systems:

- Conformance: Periodic testing of the protection systems is performed in accordance with IEE Std. 338, as modified by~~The GDCS design complies with the guidance of~~ RG 1.118.

RG 1.151, Instrument Sensing Lines:

- Conformance: NBS provides the measurement inputs to GDCS. The NBS instrument sensing lines conform to the guidelines of RG 1.151 and ISA-67.02.01. Flow restrictors are provided inside containment on instrument lines connected to the RCPB. Accessible manual isolation valves and self-actuating excess flow check valves are provided outside the drywell. The mechanical design guidelines as defined by ISA-67.02.01 and RG 1.151

10 CFR 52.47(a)~~(1)(vii)~~(25), Interface Requirements:

- Conformance: There are no interface requirements for this section.

10 CFR 52.47~~(a)(2)~~, Level of Detail:

- Conformance: The level of detail provided for the LD&IS in the DCD conforms to this requirement.

10 CFR 52.47~~(b)~~(c)(2)~~(i)~~, Innovative Means of Accomplishing Safety Functions:

- Conformance: The I&C design does not use innovative means for accomplishing safety functions.

7.3.3.3.2 General Design Criteria

GDC 1, 2, 4, 13, 15, 16, 19, 20, 21, 22, 23, ~~and~~ 24 29, and 30:

- Conformance: The LD&IS design complies with these GDCs.

GDC 1, 2, 4, 13, 15, 16, 19, 20, 21, 22, 23, 24, and 29:

- Conformance: The LD&IS (MSIV only) design complies with these GDCs.

7.3.3.3.3 Staff Requirements Memorandum

SRM on SECY 93-087, Item II.Q, Defense Against Common-Mode Failures in Digital Instrument and Control Systems:

- Conformance: The LD&IS and ESF designs conform to item II.Q of SECY-93-087 (BTP HICB-19) by implementation of diverse I&C, described in Section 7.8.

7.3.3.3.4 Regulatory Guide

RG 1.22, (Safety Guide 22) Periodic Testing of Protection System Actuation Function:

- Conformance: The LD&IS design conforms to RG 1.22.

RG 1.45, Reactor Coolant Pressure Boundary Leakage Detection Systems:

- Conformance: The LD&IS (non-MSIV) design conforms to RG 1.45.

RG 1.47, Bypassed and Inoperable Status Indication for Nuclear Power Plant Safety System:

- Conformance: The LD&IS design conforms to RG 1.47.

RG 1.53, Application of the Single-Failure Criterion to Nuclear Power Protection Systems:

- Conformance: ~~The LD&IS design conforms to RG 1.53.~~The LD&IS is organized into four physically and electrically-isolated divisions that use the principles of independence and redundancy to conform to the single failure criterion as defined by IEEE Std. 379, Section 4, and IEEE Std. 603, Section 5.1; additionally, the design meets N-2 conditions.

Analyses complying with IEEE Std. 379 will be used to confirm the safety-related system designs' conformance to the single failure criterion.

RG 1.62, Manual Initiation of Protective Actions:

- Conformance: The LD&IS design conforms to RG 1.62.

RG 1.75, Physical Independence of Electric Systems:

- Conformance: The LD&IS design conforms to RG 1.75 as described in Subsections 8.3.1.3 and 8.3.1.4.

RG 1.89, Environmental Qualification of Certain Electric Equipment Important to Safety for Nuclear Power Plants:

- Conformance: The LD&IS design conforms to RG 1.89. See Table 3.11-1 (Electrical and Mechanical Equipment for Environmental Qualification).

RG 1.97, Criteria for Accident Monitoring Instrumentation for Nuclear Power Plants:

- Conformance: The ESBWR I&C conforms to RG 1.97. Specific instruments credited for RG 1.97 compliance are determined as part of the HFE development process as discussed in Section 7.5.

RG 1.100, Seismic Qualification of Electric and Mechanical Equipment for Nuclear Power Plants:

- Conformance: The LD&IS design conforms to RG 1.100. See Table 3.11-1 (Electrical and Mechanical Equipment for Environmental Qualification).

RG 1.105, Setpoints for Safety-Related Instrumentation:

- Conformance: The safety-related portions of the LD&IS design conform~~s~~ to RG 1.105. Reference 7.3-2 provides detailed description of the GEH setpoint methodology.

RG 1.118, Periodic Testing of Electric Power and Protection Systems:

- Conformance: Periodic testing of the protection systems is performed in accordance with IEE Std. 338, as modified by~~The LD&IS design conforms to~~ RG 1.118.

RG 1.151, Instrument Sensing Lines:

- Conformance: NBS provides the measurement inputs to LD&IS (non-MSIV). The NBS instrument sensing lines conform to the guidelines of RG 1.151 and ISA-67.02.01. Flow restrictors are provided inside containment on instrument lines connected to the RCPB. Accessible manual isolation valves and self-actuating excess flow check valves are provided outside the drywell. The mechanical design guidelines as defined by ISA-67.02.01 and RG 1.151 are met as applicable for each installation.

RG 1.152, Criteria for Digital computers in Safety Systems of Nuclear Power Plants:

- Conformance: The LD&IS design conforms to RG 1.152.

- Conformance: ITAAC are provided for the I&C systems and equipment in Tier 1.

10 CFR 52.47(a)~~(1)(vii)~~(25), Interface Requirements:

- Conformance: There are no interface requirements for this section.

10 CFR 52.47~~(a)(2)~~, Level of Detail:

- Conformance: The level of detail provided for the CRHS in the DCD conforms to this requirement.

10 CFR 52.47~~(b)~~(c)(2)~~(i)~~, Innovative Means of Accomplishing Safety Functions:

- Conformance: The I&C design does not use innovative means for accomplishing safety functions.

7.3.4.3.2 General Design Criteria

GDC 1, 2, 4, 13, 19, 20, 21, 22, 23, ~~and~~ 24 and 29:

- Conformance: The CRHS design complies with these GDCs.

7.3.4.3.3 Staff Requirements Memorandum

SRM on SECY 93-087, Item II.Q, Defense Against Common-Mode Failures in Digital Instrument and Control Systems:

- Conformance: The CRHS and ESF designs conform to these criteria, as described in Subsection 7.8.2.2.

7.3.4.3.4 Regulatory Guides

RG 1.22, Periodic Testing of Protection System Actuation Function:

- Conformance: The CRHS design conforms to RG 1.22.

RG 1.47, Bypassed and Inoperable Status Indication for Nuclear Power Plant Safety System:

- Conformance: The CRHS design conforms to RG 1.47.

RG 1.53, Application of the Single-Failure Criterion to Nuclear Power Protection Systems:

- Conformance: The CRHS is organized into four physically and electrically-isolated divisions that use the principles of independence and redundancy to conform to the single failure criterion as defined by IEEE Std. 379, Section 4, and IEEE Std. 603, Section 5.1; additionally, the design meets N-2 conditions. Analyses complying with IEEE Std. 379 will be used to confirm the safety-related system designs' conformance to the single failure criterion.~~The CRHS design conforms to RG 1.53.~~

RG 1.62, Manual Initiation of Protective Actions:

- Alarm points are sent via dual networks to redundant message processors using dual power supplies. The processors are dedicated to alarm processing.
- The alarms are displayed on multiple independent VDUs (dual power supplies on each).
- The alarms are driven by redundant data links to the AMS (dual power). There are redundant alarm processors.
- There is one horn and one voice speaker. Test buttons are available to test the horn(s) and all the lights.
- There are no alarms requiring manually controlled actions for systems to accomplish their safety-related functions.

7.3.5.3.4 Regulatory Guides

RG 1.22, Safety Guide 22 Periodic Testing of Protection System Actuation Functions:

- Conformance: The SSLC/ESF design complies with the guidance of RG 1.22.

RG 1.45, Reactor Coolant Pressure Boundary Leakage Detection Systems:

- Conformance: The SSLC/ESF design complies with the guidance of RG 1.45.

RG 1.47, Bypassed and Inoperable Status Indication for Nuclear Power Plant Safety Systems:

- Conformance: The SSLC/ESF provides bypass capability and status that complies with RG 1.47.

RG 1.53, Application of the Single-Failure Criterion to Nuclear Power Protection Systems:

- Conformance: ~~The SSLC/ESF design complies with the guidance of RG 1.53, IEEE Std. 603, Section 5.1 and IEEE Std. 379.~~ The SSLC/ESF is organized into four physically and electrically-isolated divisions that use the principles of independence and redundancy to conform to the single failure criterion as defined by IEEE Std. 379, Section 4, and IEEE Std. 603, Section 5.1; additionally, the design meets N-2 conditions. Analyses complying with IEEE Std. 379 will be used to confirm the safety-related system designs' conformance to the single failure criterion.

RG 1.62, Manual Initiation of Protective Actions:

- Conformance: The SSLC/ESF design complies with the guidance of RG 1.62. Signals for manual initiation of protective actions are hardwired to the SSLC/ESF equipment.

RG 1.75, Physical Independence of Electric Systems:

- Conformance: The SSLC/ESF design conforms to RG 1.75 as described in Subsections 8.3.1.3 and 8.3.1.4.

disable the VB isolation function. The discrete logic and solid state controls used in this design are not subject to the vulnerabilities described by SECY-93-087, Item II.Q.

7.3.6.3.4 Regulatory Guides

RG 1.22, Periodic Testing of Protection System Function:

- Conformance: The VB isolation function design conforms to RG 1.22. System logic and components are tested periodically during refueling outages.

RG 1.47, Bypassed and Inoperable Status Indication for Nuclear Power Plant Safety:

- Conformance: The VB isolation function design conforms to RG 1.47. Automatic indication is provided in the MCR to inform the operator that the system is inoperable or a division is bypassed.

RG 1.53, Application of the Single-Failure Criterion to Nuclear Power Protection Systems:

- Conformance: ~~The VB isolation function design conforms to RG 1.53, IEEE Std. 603, Section 5.1, and IEEE Std. 379.~~ The VB isolation function is organized into four physically and electrically-isolated divisions that use the principles of independence and redundancy to conform to the single failure criterion as defined by IEEE Std. 379, Section 4, and IEEE Std. 603, Section 5.1; additionally, the design meets N-2 conditions. Analyses complying with IEEE Std. 379 will be used to confirm the safety-related system designs' conformance to the single failure criterion.

RG 1.62, Manual Initiation of Protective Actions:

- Conformance: The VB isolation function design complies with RG 1.62. Each division has a manual actuation switch in the MCR. Initiation of the system requires actuation of two switches to ensure that manual initiation is a premeditated act.

RG 1.75, Physical Independence of Electric Systems:

- The VB isolation function design conforms to RG 1.75 as described in Subsections 8.3.1.3 and 8.3.1.4.

RG 1.89, Environmental Qualification of Certain Electric Equipment Important to Safety for Nuclear Power Plants:

- Conformance: The VB isolation function design conforms to RG 1.89. See Table 3.11-1 (Electrical and Mechanical Equipment for Environmental Qualification).

RG 1.97, Criteria for Accident Monitoring Instrumentation for Nuclear Power Plants:

- Conformance: The ESBWR I&C conforms to RG 1.97. Specific instruments credited for RG 1.97 compliance are determined as part of the HFE development process as discussed in Section 7.5.

RG 1.100, Seismic Qualification of Electric and Mechanical Equipment for Nuclear Power Plants:

7.3 ENGINEERED SAFETY FEATURES SYSTEMS

The Engineered Safety Features (ESF) systems are part of a group of systems collectively called the Safety-Related Distributed Control and Information System (Q-DCIS). A simplified network functional ~~block~~ diagram of the ~~Q~~-DCIS is included as ~~part of~~ Figure 7.1-1. ~~and a functional network diagram appears as Figure 7.1-2.~~ This~~ese~~ diagram~~s~~ indicates the relationships of the ESF systems with their safety-related peers and with nonsafety-related plant data systems collectively called the Nonsafety-Related Distributed Control and Information Systems (N-DCIS). Section 7.1 contains a description of these relationships.

7.3.1 Emergency Core Cooling System

The Emergency Core Cooling System (ECCS) comprises the Automatic Depressurization System (ADS), the Gravity-Driven Cooling System (GDCS), the Isolation Condenser System (ICS) (Subsection 7.4.4), and the Standby Liquid Control (SLC) System (Subsection 7.4.1).

7.3.1.1 Automatic Depressurization System

The ADS resides within the Nuclear Boiler System (NBS). It depressurizes the reactor so that the low-pressure GDCS can provide make up coolant to the Reactor Pressure Vessel (RPV).

7.3.1.1.1 System Design Bases

The ADS instrumentation and controls (I&C) safety-related requirements are to:

- Detect reactor low water level, Level 1 (see Subsection 7.7.1.2 and Figure 7.7-1 for more information on the definition of water levels),
- Automatically actuate the Safety Relief Valves (SRVs) and Depressurization Valves (DPVs) after Level 1 is reached,
- Actuate the SRVs and DPVs sequentially and in groups to achieve the required depressurization characteristics,
- Render no more than one valve inoperative for any single failure,
- Ensure physical and electrical separation and isolation between safety-related divisions and from nonsafety-related circuits and equipment, and
- Indicate the status of SRV and DPV in the Main Control Room (MCR).

The ADS I&C meet the nonsafety-related requirements that:

- No single I&C failure inadvertently opens an SRV or a DPV, and
- ADS-parameter alarms are provided in the MCR.

The SLC system initiation function is part of a group of systems collectively called the Safety-Related Distributed Control and Information System (Q-DCIS). A simplified network functional ~~block~~ diagram of the ~~Q-~~DCIS is included as ~~part of~~ Figure 7.1-1.~~, and a functional network diagram appears as Figure 7.1-2.~~ Thi~~se~~s diagram~~s~~ indicates the relationships of the SLC system with its safety-related peers, and with nonsafety-related plant data systems collectively called the Nonsafety-Related distributed Control and Information System (N-DCIS). Section 7.1 contains a description of these relationships.

7.4.1.2 System Description

A detailed system description is given in Subsection 9.3.5.2. The I&C of the SLC system are described below. The safety-related SLC system provides diverse backup capability for reactor shutdown, which is independent of the Reactor Protection System (RPS). For the reactor shutdown function, the SLC system is manually initiated from the MCR by using dual, key-locked control switches. Parameters such as neutron flux, reactor vessel pressure and level, and control rod position are available to the operator in the MCR to assess the need for manual SLC initiation. Additionally, accumulator pressure and solution level, as well as squib injection valve and shut-off valve status indication, are provided in the MCR to monitor the operating and performance status of the SLC system. ~~(IEEE Std. 603, Section 4.5)~~

The SLC system is initiated automatically as part of the ECCS, to mitigate Loss-of-Coolant-Accident (LOCA) events. The SLC system receives an actuation command 50 seconds after a confirmed LOCA. The SLC actuation sequence corresponds to the first Depressurization Valve (DPV) actuation (as described in the Automatic Depressurization System [ADS] logic discussion in Subsection 7.3.1.1). The SLC system also receives a diverse ECCS initiation signal from the Diverse Protection System (DPS).

The SLC system also starts automatically on an ATWS mitigation signal persisting for 180 seconds. The ATWS mitigation (ATWS/SLC) logic performs the diverse emergency shutdown function (in compliance with the requirements of 10 CFR 50.62). ATWS/SLC logic is described in Section 7.8.1, Diverse I&C Systems, and is depicted on Figure 7.8-3, ATWS Mitigation Logic (SLC System Initiation, Feedwater Runback).

The ATWS/SLC logic uses sensors, hardware, and software platforms diverse from the Safety System Logic and Control/Engineered Safety Features (SSLC/ESF), RPS, and DPS hardware/software platforms.

To avoid reducing boron concentration during SLC operation, the SLC system logic transmits an isolation signal to the Reactor Water Clean-Up/Shutdown Cooling System (RWCU/SDC) via the Leak Detection and Isolation System (LD&IS).

To avoid the injection of nitrogen into the Reactor Pressure Vessel (RPV) System, four divisional, safety-related level sensors per SLC accumulator are used to provide automatic isolation of series accumulator shut-off valves on (a voted two-out-of-four) low accumulator level. The SLC system processors of the ATWS/SLC mitigation logic platform perform the shut-off valve isolation logic.

- Conformance: The SLC system design conforms to these criteria by providing diverse I&C, as described in Section 7.8.

7.4.1.3.4 Regulatory Guides

RG 1.22, Periodic Testing of Protection System Actuation Functions:

- Conformance: The SLC system design conforms to RG 1.22.

RG 1.47, Bypassed and Inoperable Status Indication for Nuclear Power Plant Safety Systems:

- Conformance: The SLC system design conforms to RG 1.47.

RG 1.53, Application of the Single-Failure Criterion to Nuclear Power Protection Systems:

- Conformance: The SLC is organized into four physically and electrically-isolated divisions that use the principles of independence and redundancy to conform to the single failure criterion as defined by IEEE Std. 379, Section 4, and IEEE Std. 603, Section 5.1; additionally, the design meets N-2 conditions. Analyses complying with IEEE Std. 379 will be used to confirm the safety-related system designs' conformance to the single failure criterion.

  The SLC system design is a redundant backup to the reactor control and scram systems, and performs an ECCS function. The SLC system design has two redundant and parallel squib-type valves in each loop. Only one valve in each loop is required for the safety-related function of the SLC system. The SLC system instrumentation assuring operability of the system also is redundant.

~~RG 1.62, Manual Initiation of Protective Actions:~~

- ~~Conformance: The SLC system design conforms to RG 1.62. Dual (key-locked) control switches are provided, to actuate the SLC system.~~

RG 1.75, Physical Independence of Electric Systems:

- Conformance: The SLC system design conforms to RG 1.75 as described in Subsections 8.3.1.3 and 8.3.1.4.

RG 1.89, Environmental Qualification of Certain Electric Equipment Important to Safety for Nuclear Power Plants:

- Conformance: The SLC system design conforms to RG 1.89. See Table 3.11-1 (Electrical and Mechanical Equipment for Environmental Qualification).

RG 1.97, Criteria for Accident Monitoring Instrumentation for Nuclear Power Plants:

- Conformance: The ESBWR I&C conforms to RG 1.97. Specific instruments credited for RG 1.97 compliance are determined as part of the HFE development process as discussed in Section 7.5.

7.4.2.2 System Description

7.4.2.2.1 General

The RSS has two redundant and independent panels. All parameters displayed and/or controlled from Division 1 and Division 2 in the MCR also are displayed and/or can be controlled from any of the two RSS panels ~~(IEEE Std. 603, Section 5.8)~~. Each panel contains:

- Division 1 Manual Scram Switch,
- Division 2 Manual Scram Switch,
- Division 1 Manual Main Steam Isolation Valve (MSIV) Isolation Switch,
- Division 2 Manual MSIV Isolation Switch,
- Division 1 Safety-related Video Display Unit (VDU),
- Division 2 Safety-related VDU,
- Nonsafety-related VDU, and
- Nonsafety-related Communications Equipment.

All data from the Q-DCIS and N-DCIS networks are available for display on the RSS panels. Because the VDUs on the RSS panels are connected to Q-DCIS or N-DCIS through the same networks serving corresponding VDUs at the MCR, all Division 1 and 2 safety-related and nonsafety-related display/control functions at the MCR also are available at the RSS panels. A simplified RSS panel schematic is provided in Figure 7.4-1. A simplified network functional ~~block~~ diagram of the Q-DCIS and N-DCIS is included as ~~part of~~ Figure 7.1-1.~~, and a functional network diagram appears as Figure 7.1-2.~~ This~~ese~~ diagram~~s~~ indicates the relationships of safety-related ~~or~~ and nonsafety-related systems with their peers, and with plant data acquisition systems. Section 7.1 contains a description of these relationships. The software for the RSS safety-related VDUs is developed as part of the SSLC/ESF platform hardware/software development process. The software for the RSS nonsafety-related VDUs is developed as part of the nonsafety-related network segment hardware/software development processes.

The two RSS panels are located in different rooms inside the Reactor Building (RB). Each RSS Panel room has a sliding fire door with a minimum fire rating of three hours. The RSS panel room environment typically is similar to the MCR environment. Access to and use of the RSS panels is administratively controlled. This satisfies the control access requirement of IEEE Std. 603, Section 5.9.

The RSS provides sufficient redundancy in its control and monitoring capability, to accommodate a single failure in the interfacing systems, a single failure in the RSS controls and the event that caused the MCR evacuation. The RSS is designed such that any failure within it does not degrade the capability of interfacing safety-related systems. The RSS satisfies the single-failure criterion and independence requirements of IEEE Std. 603, Sections 5.1, 5.6, and 6.3.

~~7.4.2.3.3~~ 7.4.2.3.4 Regulatory Guides

RG 1.22, (Safety Guide 22) Periodic Testing of Protection System Actuation Function:

- Conformance: The RSS design conforms to RG 1.22.

RG 1.47, Bypassed and Inoperable Status Indication for Nuclear Power Plant Safety Systems:

- Conformance: The RSS system design conforms to RG 1.47.

RG 1.53, Application of the Single-Failure Criterion to Nuclear Power Protection Systems:

- Conformance: The RSS is organized into four physically and electrically-isolated divisions that use the principles of independence and redundancy to conform to the single failure criterion as defined by IEEE Std. 379, Section 4, and IEEE Std. 603, Section 5.1; additionally, the design meets N-2 conditions. Analyses complying with IEEE Std. 379 will be used to confirm the safety-related system designs' conformance to the single failure criterion.~~The RSS design conforms to RG 1.53, IEEE Std. 603, Section 5.1, and IEEE Std. 379.~~

In addition, separation and isolation is preserved both mechanically and electrically in accordance with IEEE 603, Sections 5.6 and 6.3, and RG 1.75.

RG 1.75, Physical Independence of Electric Systems:

- Conformance: The RSS design conforms to RG 1.75 as described in Subsections 8.3.1.3 and 8.3.1.4.

RG 1.89, Environmental Qualification of Certain Electric Equipment Important to Safety for Nuclear Power Plants:

- Conformance: The RSS design conforms to RG 1.89. See Table 3.11-1 (Electrical and Mechanical Equipment for Environmental Qualification).

RG 1.97, Criteria for Accident Monitoring Instrumentation for Nuclear Power Plants:

- Conformance: The ESBWR I&C conforms to RG 1.97. Specific instruments credited for RG 1.97 compliance are determined as part of the HFE development process as discussed in Section 7.5.

RG 1.100, Seismic Qualification of Electric and Mechanical Equipment for Nuclear Power Plants:

- Conformance: The RSS design conforms to RG 1.100. See Table 3.11-1 (Electrical and Mechanical Equipment for Environmental Qualification).

RG 1.118, Periodic Testing of Electric Power and Protection Systems:

- Conformance: Periodic testing of the protection systems is performed in accordance with IEE Std. 338, as modified by ~~The RSS design conforms to~~ RG 1.118.

RG 1.153, Power Instrumentation & Control Portions of Safety Systems:

7.4.3.5 Instrumentation and Control Requirements

Operation of the RWCU/SDC system is from the MCR. The main I&C available to the MCR operator includes:

- Manual and automatic flow controllers for system, demineralizer, and overboarding flow;
- Flow indications for system, demineralizer, and overboarding flow;
- Position indications for containment isolation valves, flow control valves, and motor-operated valves;
- Temperature indication for demineralizer influent water;
- Conductivity recorders for demineralizer influent and effluent;
- Temperature of the system supply water (from the RPV bottom head);
- Temperature of the system return (to feedwater line) water;
- Temperatures of the non-regenerative and regenerative heat exchanger water (reactor coolant sides);
- Process alarms (for example, high water temperatures, high overboarding line pressure, low system flow, high system flow, high conductivity, etc.); and
- Pressure indication for the overboarding line.

7.4.4 Isolation Condenser System

7.4.4.1 System Design Bases

Refer to Subsection 5.4.6.1 for the design bases of the ICS~~ (IEEE Std. 603, Sections 4.1 and 4.2)~~. Figure 5.1-3 shows the basic configuration of the ICS.

The ICS is one of the ESF systems whose I&C belong to a group of systems collectively called the Q-DCIS. A simplified network functional ~~block~~ diagram of the ~~Q-~~DCIS is included as ~~part of~~ Figure 7.1-1.~~, and a functional network diagram appears as Figure 7.1-2.~~ This~~ese~~ diagram~~s~~ indicates the relationships of the ICS with its safety-related peers, and with nonsafety-related plant data systems collectively called the N-DCIS. Section 7.1 contains a description of these relationships.

7.4.4.2 System Description

Refer to Subsection 5.4.6.2 for the ICS system description.

7.4.4.3 Safety Evaluation

Conformance of ICS equipment to the requirements of IEEE Std. 603 (other than I&C) is addressed in Subsections 5.4.6.2 and 5.4.6.3. The paragraph on "Isolation Condenser Operation"

- Conformance: ITAAC are provided for the I&C systems and equipment in Tier 1.

10 CFR 52.47(a)~~(1)(vii)~~(25), Interface Requirements:

- Conformance: There are no interface requirements for ICS.

10 CFR 52.47~~(a)(2)~~, Level of Detail:

- Conformance: The level of detail provided for the ICS within the DCD conforms to this BTP.

10 CFR 52.47~~(b)~~(c)(2)~~(i)~~, Innovative Means of Accomplishing Safety Functions:

- Conformance: The I&C design does not use innovative means for accomplishing safety functions.

7.4.4.3.2 General Design Criteria

In accordance with the SRP for Section 7.4 and Table 7.1-1, the following GDC are addressed for the ICS:

GDC 1, 2, 4, 13, 19 , 20, 21, 22, 23, ~~and,~~ 24, 29, 33, 34, 35, 37, and 44:

- Conformance: The ICS design conforms to these GDC.

7.4.4.3.3 Staff Requirements Memorandum

SECY-93-087, Item II.Q, Defense Against Common-Mode Failures in Digital Instrumentation and Control Systems:

- Conformance: The ICS design conforms to these criteria by providing diverse I&C, as described in Section 7.8.

7.4.4.3.4 Regulatory Guides

RG 1.22, Periodic Testing of Protection System Actuation Functions:

- Conformance: The ICS system design conforms to RG 1.22.

RG 1.47, Bypassed and Inoperable Status Indication for Nuclear Power Plant Safety Systems:

- Conformance: The ICS design conforms to RG 1.47.

RG 1.53, Application of the Single-Failure to Nuclear Power Protection Systems:

- Conformance: The ICS is organized into four physically and electrically-isolated divisions that use the principles of independence and redundancy to conform to the single failure criterion as defined by IEEE Std. 379, Section 4, and IEEE Std. 603, Section 5.1; additionally, the design meets N-2 conditions. Analyses complying with IEEE Std. 379 will be used to confirm the safety-related system designs' conformance to the single failure criterion.~~The ICS design conforms to RG 1.53.~~

7.5 SAFETY-RELATED AND NONSAFETY-RELATED INFORMATION SYSTEMS

This section discusses instrumentation associated with:

- Post Accident Monitoring (PAM),
- Containment Monitoring System (CMS),
- Process Radiation Monitoring System (PRMS),
- Area Radiation Monitoring System (ARMS), and
- Pool Monitoring ~~Subsystems~~Instrumentation.

The safety-related portions of the PAM Instrumentation, CMS, PRMS, and Pool Monitoring Instrumentation~~Subsystems~~ are part of a group of ~~systems~~ instruments/equipment collectively called the Safety-Related Distributed Control and Information System (Q-DCIS). A simplified network functional ~~block~~ diagram of the ~~Q-~~DCIS is included as ~~part of~~ Figure 7.1-1 ~~and a functional network diagram appears as Figure 7.1-2~~ (not all systems are shown on these figures.)

This~~ese~~ diagram~~s~~ schematically indicates the relationships of a safety-related system with its safety-related peers and with nonsafety-related plant data systems called the Nonsafety-Related Distributed Control and Information System (N-DCIS). Section 7.1 contains a description of these relationships.

The nonsafety-related portions of the PAM instrumentation, CMS, PRMS, and the ARMS are part of the N-DCIS.

7.5.1 Post Accident Monitoring Instrumentation

7.5.1.1 System Design Bases

The PAM instrumentation safety-related design bases are to:

- Provide instrumentation to monitor variables and systems over their anticipated ranges for accident conditions as appropriate to ensure adequate safety.
- Provide the appropriate Main Control Room (MCR) instrumentation and displays to provide the information from which actions can be taken to maintain a safe plant condition under accident conditions, including Loss-of-Coolant Accidents (LOCAs).
- Provide equipment (including the necessary instrumentation) at appropriate locations outside the MCR with the capability for prompt hot shutdown of the reactor, and
- Provide the means for monitoring the reactor containment atmosphere spaces containing components that recirculate LOCA fluids, effluent discharge paths, and the plant environs for radioactivity that may be released as a result of accidents.

- ~~The alarms are driven by redundant datalinks to the AMS (dual power). There are redundant alarm processors.~~
- ~~There is one horn and one voice speaker. Test buttons are available to test the horn and all the lights.~~
- ~~There are no alarms requiring manually controlled actions for safety systems to accomplish their safety-related functions.~~

7.5.2.3.4 Regulatory Guides

RG 1.22, (Safety Guide 22) Periodic Testing of Protection System Actuation Function:

- Conformance: The CMS design conforms to RG 1.22.

RG 1.45, Reactor Coolant Pressure Boundary Leakage Detection Systems:

- The CMS design complies with RG 1.45.

RG 1.47, Bypassed and Inoperable Status Indication for Nuclear Power Plant Safety Systems:

- Conformance: The CMS design conforms to RG 1.47.

RG 1.53, Application of the Single Failure Criterion to Nuclear Power Protection Systems:

- Conformance: The CMS is organized into four physically and electrically-isolated divisions that use the principle of independence and redundancy to conform to the single failure criterion as defined by IEEE Std. 379, Section 4, and IEEE Std. 603, Section 5.1; additionally, the design meets N-2 conditions. Analyses complying with IEEE Std. 379 will be used to confirm the safety-related system designs' conformance to the single-failure criterion.~~The CMS design conforms to RG 1.53.~~

RG 1.75, Physical Independence of Electrical Systems:

- Conformance: The CMS design conforms to RG 1.75 as described in Subsections 8.3.1.3 and 8.3.1.4.

RG 1.89, Environmental Qualification of Certain Electric Equipment Important to Safety for Nuclear Power Plants:

- Conformance: The CMS design conforms to RG 1.89. See Table 3.11-1 (Electrical and Mechanical Equipment for Environmental Qualification).

RG 1.97, ~~–~~Criteria for Accident Monitoring Instrumentation for Nuclear Power Plants:

- Conformance: The ESBWR I&C conforms to RG 1.97. Specific instruments credited for RG 1.97 compliance are determined as part of the HFE development process as discussed in Section 7.5.

RG 1.100, Seismic Qualification of Electric and Mechanical Equipment for Nuclear Power Plants:

7.5.3.3.3 Staff Requirements Memorandum

SRM on SECY 93-087, Item II.Q, Defense Against Common-Mode Failures in Digital Instrument and Control Systems:

- Conformance: The PRMS design conforms to item II.Q of SECY-93-087 (BTP HICB-19).

~~SRM on SECY-93-087, Item II.T, Control Room Annunciator (Alarm) Reliability:~~

- ~~Conformance: The PRMS AMS design meets the requirements of SECY-93-087, Item II.T for redundancy, independence, and separation in that the "alarm system" is considered redundant as follows:~~
  - ~~Alarm points are sent via dual networks to redundant message processors using dual power supplies. The processors are dedicated to alarm processing.~~
  - ~~The alarms are displayed on multiple independent VDUs (dual power supplies on each).~~
  - ~~The alarms are driven by redundant data links to the AMS (dual power). There are redundant alarm processors.~~
  - ~~There is one horn and one voice speaker. Test buttons are available to test the horn(s) and all the lights.~~
  - ~~There are no alarms requiring manually controlled actions for systems to accomplish their safety-related functions.~~

7.5.3.3.4 Regulatory Guides

RG 1.22, (Safety Guide 22) Periodic Testing of Protection System Actuation Function:

- Conformance: The PRMS design conforms to RG 1.22.

RG 1.45, Reactor Coolant Pressure Boundary Leakage Detection Systems:

- Conformance: The PRMS design complies with RG 1.45.

RG 1.47, Bypassed and Inoperable Status Indication for Nuclear Power Plant Safety Systems:

- Conformance: The PRMS design conforms to RG 1.47.

RG 1.53, Application of the Single Failure Criterion to Nuclear Power Protection Systems:

- Conformance: The PRMS is organized into four physically and electrically-isolated divisions that use the principle of independence and redundancy to conform to the single failure criterion as defined by IEEE Std. 379, Section 4, and IEEE Std. 603, Section 5.1; additionally, the design meets N-2 conditions. Analyses complying with IEEE Std. 379 will be used to confirm the safety-related system designs' conformance to the single-failure criterion.~~The PRMS design conforms to RG 1.53.~~

RG 1.75, Physical Independence of Electrical Systems:

7.7 CONTROL SYSTEMS

This section describes the Instrumentation and Control (I&C) systems for normal plant operation that do not perform plant safety-related functions. However, these systems do control plant processes that have a significant effect on plant safety. These systems can affect the performance of safety-related functions either through normal operation or through inadvertent operation. The systems described in this section include:

- The Nuclear Boiler System (NBS) – nonsafety-related subsystems, ~~and portions of safety-related subsystems,~~
- Rod Control and Information System (RC&IS),
- Feedwater Control System (FWCS),
- Plant Automation System (PAS),
- Steam Bypass and Pressure Control (SB&PC) System,
- Neutron Monitoring System (NMS) - nonsafety-related subsystems, and
- Containment Inerting System (CIS).

~~The safety-related monitoring and control portions of the NBS and NMS are part of a group of systems that is collectively referred to as the Safety-Related Distributed Control and Information System (Q-DCIS). A functional block diagram of the Q-DCIS is included as part of Figure 7.1-1, and a functional network diagram appears as Figure 7.1-2. These diagrams indicate the relationships of the NBS and NMS with their safety-related peers and with nonsafety-related plant data systems. Section 7.1 contains a description of these relationships.~~

The nonsafety-related monitoring and control for the RC&IS, FWCS, PAS, SB&PC System, NMS and NBS ~~and CIS~~ is part of a group of systems that is collectively referred to as the Nonsafety-Related Distributed Control and Information System (N-DCIS). A simplified network functional ~~block~~ diagram of the ~~N-~~DCIS is included as ~~part of~~ Figure 7.1-1.~~, and a functional network diagram appears as Figure 7.1-2.~~ This~~ese~~ diagram~~s~~ indicates the relationships of RC&IS, FWCS, PAS, SB&PC System, NMS and NBS ~~and CIS~~ with their nonsafety-related peers and with safety-related plant data systems that are collectively referred to as the Q-DCIS. Section 7.1 contains a description of these relationships.

7.7.1 Nuclear Boiler System

The NBS instrumentation provides monitoring and control input for operational variables during normal plant operating modes and during the plant response to accidents. The NBS sensors used for safety-related system actuation and control functions are addressed in other subsections within this chapter. This subsection describes ~~only the safety-related NBS instrumentation used for indication and~~ only those NBS instruments used for actuation and control of nonsafety-related systems.

7.8 DIVERSE INSTRUMENTATION AND CONTROL SYSTEMS

7.8.1 System Description

The Anticipated Transient~~s~~ Without Scram / Standby Liquid Control (ATWS/SLC) ~~mitigation~~ system and the Diverse Protection System (DPS) comprise the diverse I&C systems that are part of the diversity and defense-in-depth strategy. They provide diverse backup to the Reactor Protection System (RPS) and the Safety System Logic and Control/Engineered Safety Features (SSLC/ESF). The ATWS mitigating logic is designed to meet the diverse shutdown requirements of 10 CFR 50.62, "Requirements For Reduction of Risk from Anticipated Transients Without Scram (ATWS) Events for Light-Water-Cooled Nuclear Power Plants." The ATWS mitigating logic system is implemented with the Safety-Related Distributed Control and Information System (Q-DCIS) and the Nonsafety-Related Distributed Control and Information System (N-DCIS).

The nonsafety-related DPS (which is part of the N-DCIS) processes the nonsafety-related portions of the ATWS mitigation logic. It is designed to mitigate the possibility of digital protection system common mode failures discussed in Item II.Q of Commission Paper (Secretary of the Commission, Office of the [NRC]) (SECY) 93-087, "Policy, Technical, and Licensing Issues Pertaining to Evolutionary and Advanced Light-Water Reactor (ALWR) Designs" and Item II.Q of Staff Requirements Memorandum (SRM) on SECY 93-087. Figure 7.8-1 provides a simplified block diagram of the DPS.

The relationships between the ATWS mitigation logic, the DPS, the Q-DCIS and the N-DCIS are discussed in Section 7.1. Figure 7.1-1 provides a simplified network functional ~~block~~ diagram of the relationship between the ATWS/~~Standby Liquid Control (ATWS/~~SLC~~)~~ System and the Q-DCIS, the DPS, and the N-DCIS. ~~Figure 7.1-2 provides a functional network diagram.~~

The ATWS/SLC mitigation logic provides a diverse means of emergency shutdown using the SLC System for soluble boron injection. Alternate rod insertion, which hydraulically scrams the plant using the three sets of air header dump valves of the Control Rod Drive (CRD) System, is also used for ATWS mitigation. This logic is implemented in the DPS. Detailed ATWS mitigation features are described later in this subsection.

The DPS is a nonsafety-related, triple redundant system powered by redundant nonsafety-related load group power sources. The highly reliable, isolated, and independent DPS provides diverse reactor scram ~~protection~~ using a subset of the RPS scram signals. The DPS provides diverse emergency core cooling by independently actuating the Emergency Core Cooling System (ECCS). The DPS performs selected containment isolation functions as part of the diverse ESF function. Additional DPS features are described in Subsection 7.8.1.2. The design scope of the DPS functions is based on the diversity and defense-in-depth strategy developed via analyses that show the design meets criteria of BTP HICB-19, as outlined in Licensing Topical Report (LTR) NEDO-33251, "ESBWR I&C Defense-In-Depth and Diversity Report." (Reference 7.8-1). A confirmatory analysis supports and validates the DPS design scope requirements of BTP HICB-19. Conformance to BTP HICB-19 is described further in Subsection 7.8.3.5.

monitoring of parameters that support the safety functions. The displays and controls shall be independent and diverse from the safety computer systems."

The implementation of the DPS and the ATWS mitigation features as described in Subsection 7.8.1, in conjunction with the RPS and ESF designs, conforms to the above SRM requirements.

7.8.3.4 Regulatory Guides

RG 1.22, (Safety Guide 22) Periodic Testing of Protection System Actuation Functions:

- Conformance: The safety-related ATWS mitigation logic conforms to the guidance in RG 1.22. This RG is not applicable to the nonsafety-related DPS.

RG 1.47, Bypassed and Inoperable Status Indication for Nuclear Power Plant Safety Systems:

- Conformance: The safety-related ATWS mitigation logic conforms to the guidance in RG 1.47. Automatic indication is provided in the MCR to inform the operator that the system is inoperable or a division is bypassed. This RG is not applicable to the nonsafety-related DPS.

RG 1.53, Application of the Single-Failure Criterion to Nuclear Power Protection Systems:

- Conformance The safety-related ATWS mitigation logic is organized into four physically and electrically isolated divisions that use the principles of independence and redundancy to conform to the single failure criterion as defined by IEEE Std. 379, Section 4, and IEEE Std. 603, Section 5.1; additionally the design meets N-2 conditions. Analyses complying with IEEE Std. 379 will be used to confirm the safety-related system designs' conformance to the single-failure criterion.~~conforms to the guidance in RG 1.53~~. This RG is not applicable to the nonsafety-related DPS.

RG 1.62, Manual Initiation of Protection Actions:

- Conformance: The safety-related ATWS mitigation logic conforms to the guidance in RG 1.62. This RG is not applicable to the nonsafety-related DPS.

RG 1.75, Physical Independence of Electric Systems:

- Conformance: The safety-related ATWS mitigation logic conforms to the guidance in RG 1.75. This RG is not applicable to the nonsafety-related DPS.

RG 1.89, Environmental Qualification of Certain Electric Equipment Important to Safety for Nuclear Power Plants:

- Conformance: ~~The safety-related ATWS mitigation logic conforms to the guidance in RG 1.89. This RG is not applicable to the nonsafety-related DPS~~.See Table 3.11-1 (Electrical and Mechanical Equipment for Environmental Qualification).

RG 1.97-Criteria for Accident Monitoring Instrumentation for Nuclear Power Plants: