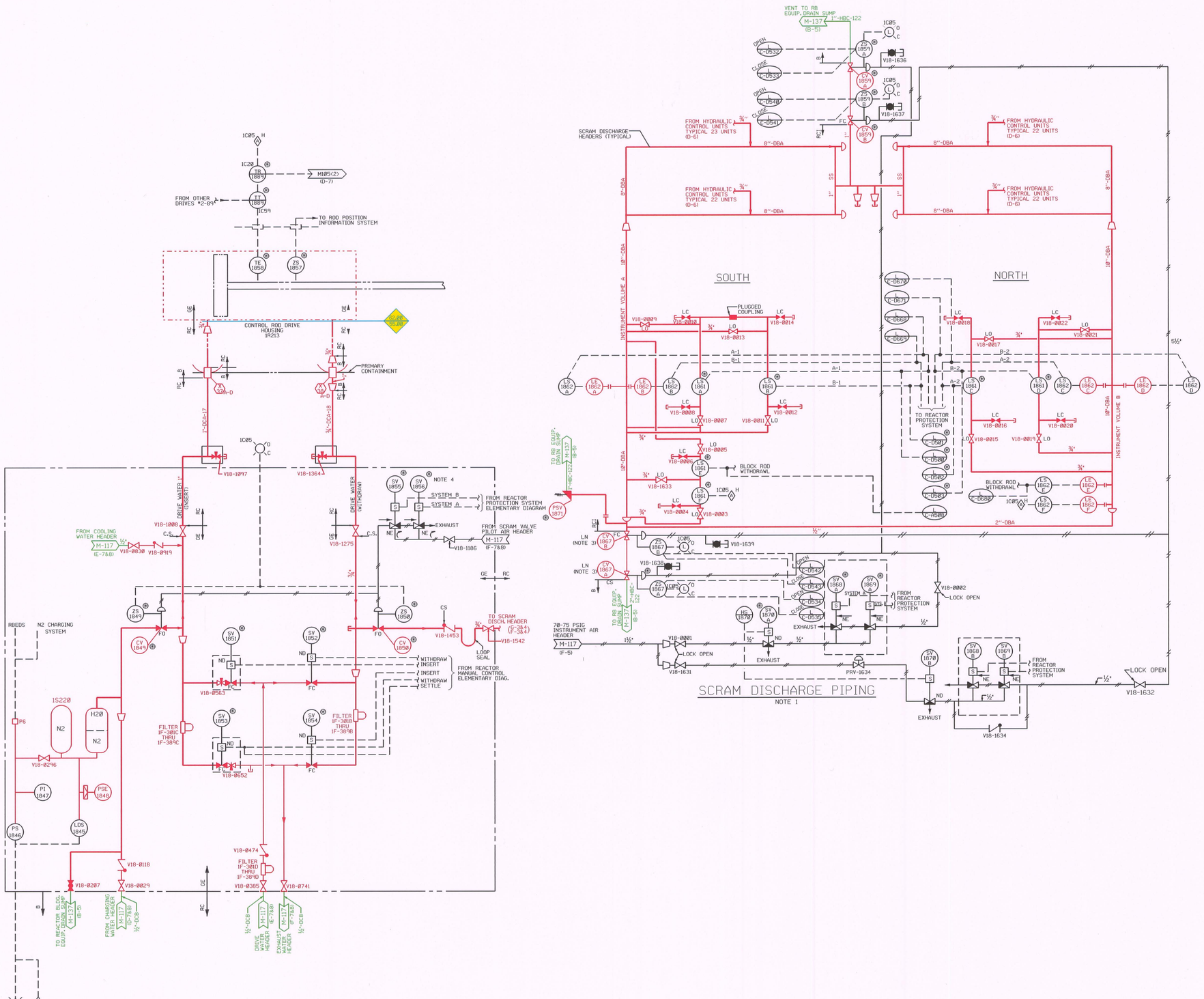

D-01

NOTES:

1. FOR RADIATION SHIELDING REQUIREMENTS REFER TO VENDOR DRAWING M115-011
2. HCU VALVES AND INSTRUMENTATION, ARE LISTED IN THE CHAMPS DATABASE BY THE LOCATION (XX-XX). EXAMPLES: CV1849(02-09) V18-0207(42-27)
3. SIDE MOUNTED HANDWHEEL IS LOCKED IN NEUTRAL FOR CV1867A & CV1867B.
4. VALVE IS A DUAL SOLENOID 3 WAY POPPET VALVE CONTAINED IN ONE VALVE BODY AND SCHEMATICALLY FUNCTIONS AS DEPICTED.

NO.	DATE	REVISION	DRFTR.	CHK'D.	ENGR.	LEAD
1	1/20/09	REVISED PER SUPPLEMENT 1	DA	MLR	TH	CLB
0	9/16/08	INITIAL RELEASE	KB	JVS	TH	CLB

IES UTILITIES INC.

P&I.D.
CONTROL ROD DRIVE HYDRAULIC SYSTEM SHEET.2

DWG. NO. BECH-M118-LR REV. 1

BASE P&ID REV 25

LR NOTE

1. ALL EXPOSED DRAIN PIPING AND FUNNELS ARE IN SCOPE FOR LICENSE RENEWAL.
2. ALL (X) PENETRATIONS ARE EVALUATED IN SYSTEM 99.28PC PRIMARY CONTAINMENT.

LR LEGEND:

- COMPONENTS IN SCOPE PER 10CFR54.4(a)(1) AND/OR (a)(3) AND SUBJECT TO AMR PER 54.21
- COMPONENTS NOT SUBJECT TO AMR
- COMPONENTS IN SCOPE PER 10CFR54.4(a)(2) AND SUBJECT TO AMR PER 54.21
- SYSTEM BOUNDARY INTERFACE
  - 55.00 CONTROL ROD DRIVE
  - 62.00 NUCLEAR BOILER