MP197HB Transport Application

Structural Evaluation

Transport Package Components

- **Impact Limiters**
- **Transport Cask (Containment)**
- **Payloads (DSCs and RWCs)**
  - **Canister**
  - **Basket**
  - **Fuel Assembly**

Transport Package Weights

Transport Package Weight (w/o Payload)		**188 kips**
Payloads	NUHOMS® 32PTH DSC	110 kips
	NUHOMS® 32PTH1 DSC	**112 kips**
	NUHOMS® 37PTH DSC	110 kips
	NUHOMS® 69BTH DSC	105 kips
	NUHOMS® 24PT4 DSC	90 kips
	NUHOMS® 24PTH DSC	99 kips
	NUHOMS® 32PT DSC	107 kips
	NUHOMS® 61BT/NUHOMS® 61BTH DSC	110 kips
	Lower Level Material Canister	Less than 110 kips
	Bounding Payload Used for Cask Structural Evaluation	**118.5 kips**

Transport Package Structural Design Criteria

Component	Design Criteria
Transport Cask	ASME, Subsection NB Lid Bolt – NUREG 6007
Canister Shell Assembly	ASME, Subsection NB Interim Staff Guidance ISG-15
Basket Assembly	ASME, Subsection NG
Fuel Cladding	Yield strength at design temperature for "intact fuel" Brittle fracture evaluations for damaged fuel

TRANSNUCLEAR

Transport Cask Major Components

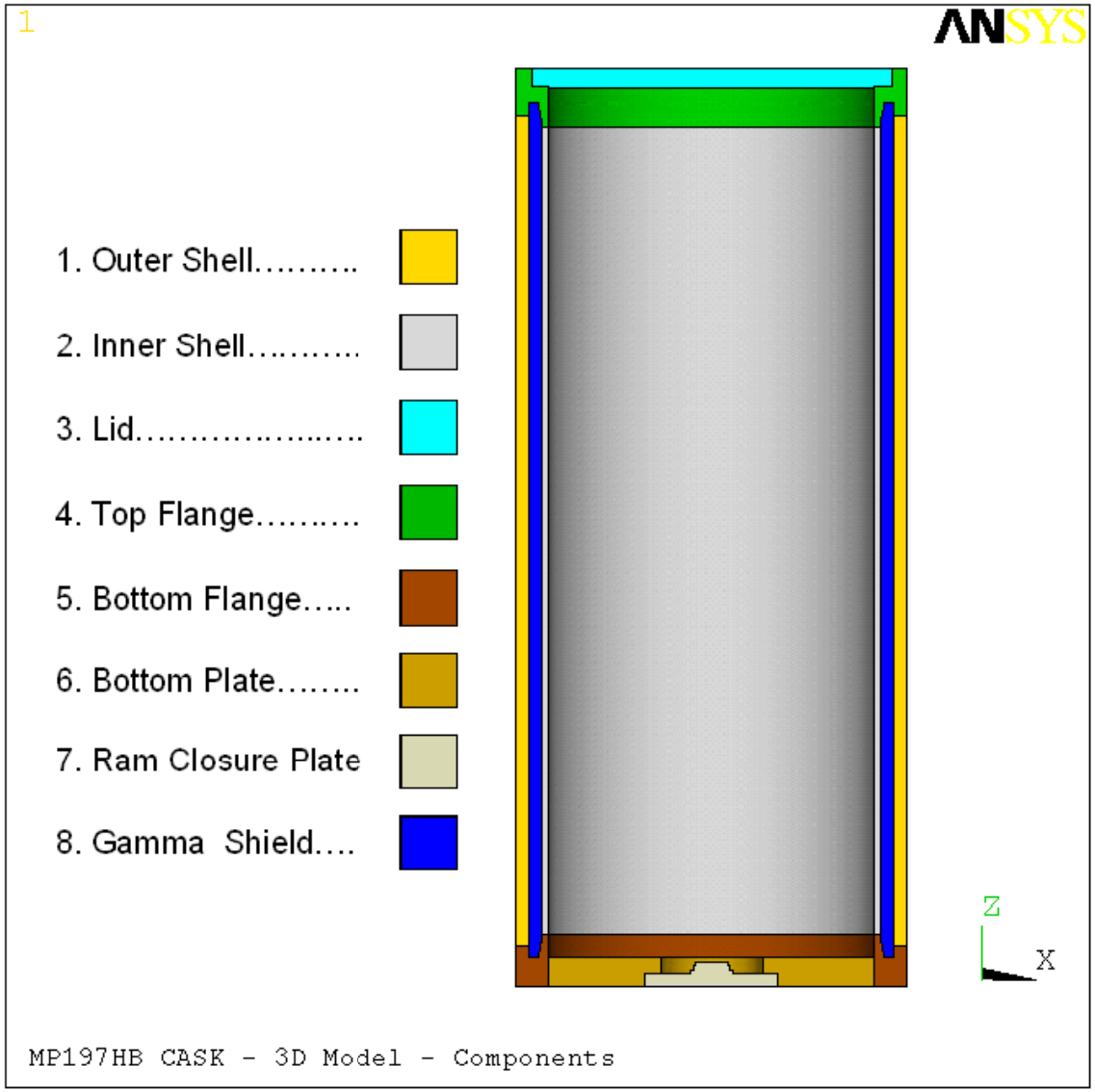

TRANSNUCLEAR

Transport Package Part 71 Design Loads

- **NCT**
  - **Dead Weight**
  - **Lifting and Tiedown**
  - **Thermal**
  - **Pressure**
  - **Shock & Vibration**
  - **1 Foot Drop**
    - **End Drop**
    - **Side Drop**
- **HAC**
  - **30 Foot Drop**
    - **End Drop**
    - **Side Drop**
    - **CG Over Corner Drop**
    - **Slap Down (10°, 20°, 30°)**
  - **Puncture**
  - **Immersion**
  - **Fire**

Transport Cask NCT Load Combinations

Load Case No.	Load Combination	Applicable Individual Loads Applied in the ANSYS Model								
		Bolt Pre-load	Gravity 1g	Int. Pres. (30 psig)	Ext. Pres. (25 psig)	Thermal Hot	Thermal Cold	Thermal -40°F Uniform	Rail Car Vib.	Rail Car Shock
13	Hot Environment (100° F amb.)	X	X	X		X				
14	Cold Environment (-40° F amb.)	X	X		X			X		
15	Increased External Pressure	X	X		X		X			
16	Min. External Pressure	X	X	X		X				
17	Rail Car Vibration	X		X		X			X	
18		X			X		X		X	
19	Rail Car Shock	X		X		X				X
20		X			X		X			X

TRANSNUCLEAR

Transport Cask NCT Load Combinations

Load Case No.	Load Combination	Applicable Individual Loads Applied in the ANSYS Model							
		Bolt Pre-load	Int. Pres. (30 psig)	Ext. Pres. (25 psig)	Thermal Hot	Thermal Cold	Lid End Drop	Bottom End Drop	Side drop
21	1 Ft End Drop on Lid End	X	X		X		X		
22		X		X		X	X		
23	1 Ft End Drop on Bottom End	X	X		X			X	
24		X		X		X		X	
25	1 Ft Side Drop	X	X		X				X
26		X		X		X			X

TRANSNUCLEAR

Transport Cask HAC Load Combinations

Load Case No.	Load Combination	Applicable Individual Loads Applied in the ANSYS Model						
		Int. Pres. (30 psig)	Ext. Pres. (25 psig)	Thermal Hot	Thermal Cold	Lid End Drop	Bot. End Drop	Side Drop
27	30 Ft. End Drop on Bottom End	X		X			X	
28			X		X		X	
29	30 Ft. End Drop on Lid End	X		X		X		
30			X		X	X		
31	30 Ft. Side Drop	X		X				X
32			X		X			X

TRANSNUCLEAR

Transport Cask HAC Load Combinations

Load Case No.	Load Combination	Applicable Individual Loads Applied in the ANSYS Model						
		Int. Pres. (30psig)	Ext. Pres. (25psig)	Thermal Hot	Thermal Cold	Corner Drop Lid End	Corner Drop Bot End	Oblique Drop Lid End
33	30 Ft. CG Over Corner Drop on Bottom End	X		X			X	
34			X		X		X	
35	30 Ft. CG Over Corner Drop on Lid End	X		X		X		
36			X		X	X		
37	30 Ft. 10º Slap Down on Lid End	X		X				X
38			X		X			X

TRANSNUCLEAR

Transport Cask Structural Evaluation Methods

» **Similar to methods used for the MP197 transport cask (CoC 9302*)***

Loading	Methods Used in **MP197HB** Transport Cask Analysis	Previously Reviewed in the **MP197** Transport Cask Analysis

NCT	• MP197HB Transport Cask Body
	  • 3D ANSYS Model
	  • Elastic/Equivalent Static Analysis
	
	• Lid Bolt
	  • Evaluated based on NUREG-6007 methodology and criteria
	
	• Upper Trunnions
	  • Evaluated for critical loads by hand calculations using ANSI N14.6 criteria
		• Similar to modeling approach described in MP197 SAR, Appendix 2.10.1 for MP197 transport cask.
		
		• Similar approach as for MP197 SAR, Appendix 2.10.2
		
		• Similar approach as for MP197 SAR, Chapter 2, Section 2.5

Transport Cask Structural Evaluation Methods

» **Similar to methods used for the MP197 transport cask (CoC 9302*)***

Loading	Methods Used in **MP197HB** Transport Cask Analysis	Previously Reviewed in the **MP197** Transport Cask Analysis

HAC	• MP197HB Transport Cask Body
	  • Same 3D ANSYS models as for Normal Loads
	  • Equivalent Static elastic-plastic analysis
		• Similar to modeling approach described in MP197 SAR, Appendix 2.10.1 for MP197 transport cask.

	• MP197HB Transport Cask • 2D ANSYS model used for lead slump and inner containment buckling analysis	• Similar approach as for MP197 SAR, Appendix 2.10.4 (lead slump analysis) and Appendix 2.10.5 (inner containment buckling analysis)

Transport Cask Structural Analysis–Stress Reporting

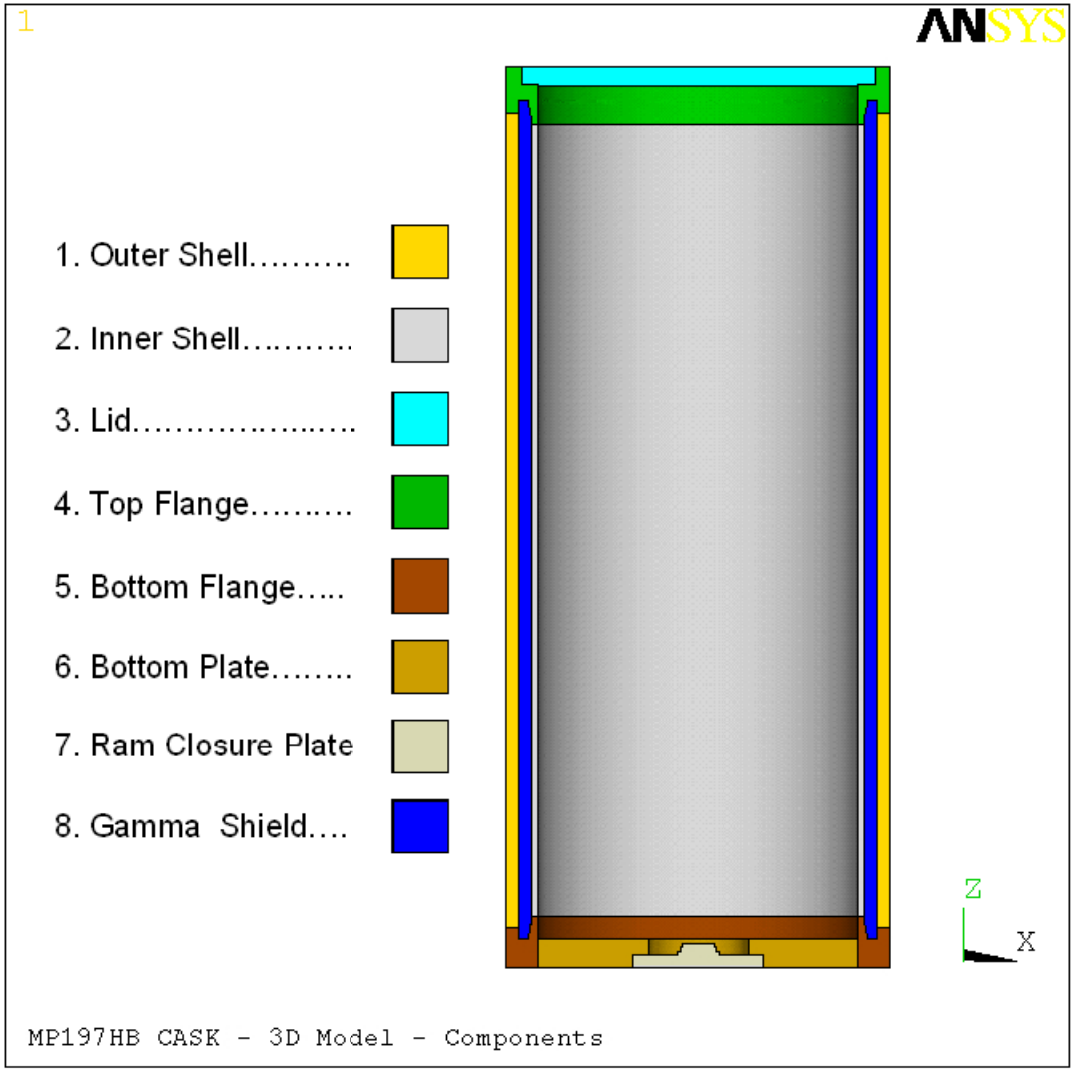

TRANSNUCLEAR

Transport Cask Structural Analysis–Stress Reporting

- **For reporting of stresses, the cask body is divided into seven components: Outer Shell, Inner Shell, Lid, Top Flange, Bottom Flange, Bottom Plate, and Ram Closure Plate.**
- **For each component, stresses are classified in accordance with ASME code as membrane, membrane plus bending, etc.**
- **The highest stress intensity values, obtained for each component, are identified and compared against ASME Code stress allowables.**

Example of Cask Body Stress Results (Preliminary)

Load Case 31		HAC - Side Drop Load Combination Side Drop + Internal Pressure 30 psig					
		Max Stress [ksi]		Allowable [ksi]		Stress Ratio	
#	Component	PM	PL+PB	PM	PL+PB	PM	PL+PB
1	Outer Shell.	34.4	41.3	49.0	63.0	70.2%	65.6%
2	Inner Shell	32.1	40.5	49.0	63.0	65.6%	64.3%
3	Lid	10.2	28.5	49.0	63.0	20.7%	45.2%
4	Top Flange	33.6	39.3	49.0	63.0	68.7%	62.4%
5	Bottom Flange	22.5	25.9	49.0	63.0	46.0%	41.1%
6	Bottom Plate	20.6	21.2	49.0	63.0	42.0%	33.6%
7	RAM Closure Plate	2.0	7.1	49.0	63.0	4.0%	11.2%

Payload (DSC) Major Components

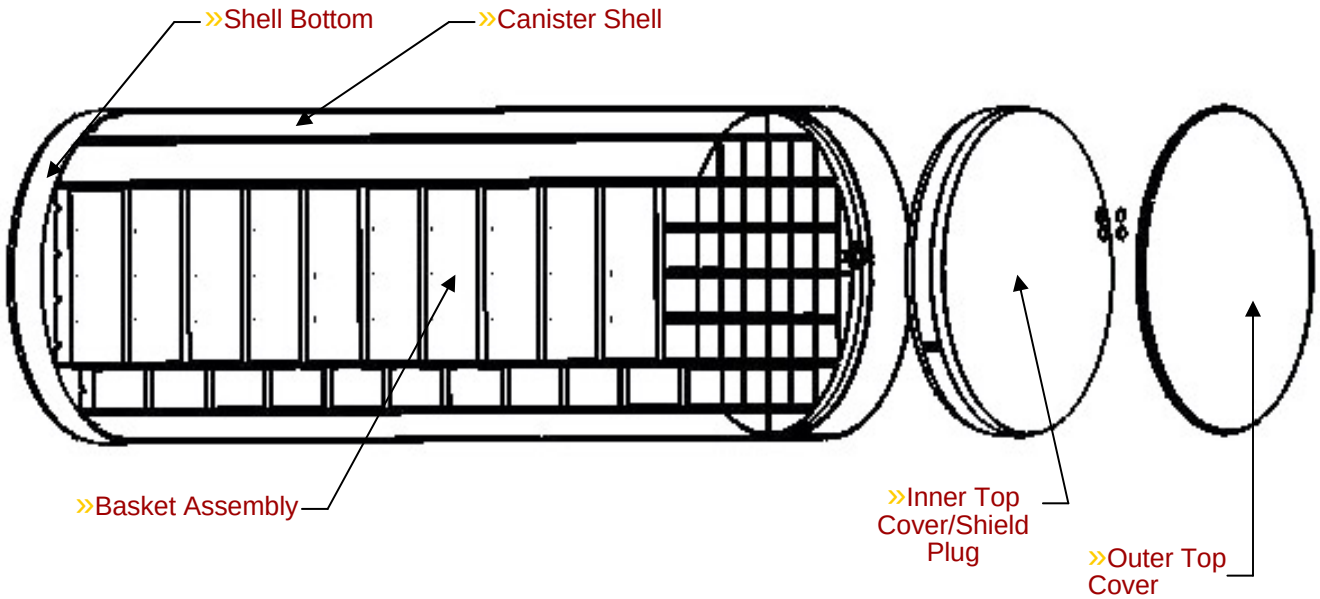

TRANSNUCLEAR

Payload NCT Loads and Load Combinations

Load Case No.	Individual Loads						
	1 Ft Side Drop	1 Ft Bottom End Drop	1 Ft Lid End Drop	Internal Pressure	External Pressure	Thermal Hot	Thermal Cold
1	X			X		X	
2	X				X		X
3		X		X		X	
4		X			X		X
5			X	X		X	
6			X		X		X

TRANSNUCLEAR

Payload HAC Loads and Load Combinations

Load Case N0.	Individual Loads						
	30 Ft Side Drop	30 Ft Bottom End Drop	30 Ft Lid End Drop	Internal Pressure	External Pressure	Thermal Hot	Thermal Cold
7	X			X		X	
8	X				X		X
9		X		X		X	
10		X			X		X
11			X	X		X	
12			X		X		X

TRANSNUCLEAR

DSC Shell Assembly Analysis Approach/Methods

- Based on similar geometry and dimensions, the various canister types are categorized into 4 groups for purposes of the structural evaluations:
  - Group 1: 69BTH, 37PTH, 32PTH, and 32PTH1
  - Group 2: 61BT and 61BTH Type 1
  - Group 3: 61BTH Type 2, 32PT, and 24PTH
  - Group 4: 24PT4 and 24PTH (with lead shield plug)
- For each group, the bounding weight (basket + fuel assembly) is used for the analysis
- Dynamic load factors (DLF) are calculated for each DSC type in each group
- The bounding g load (DLF x cask baseline g load) is used to bound the analysis of the canisters in each group
- The evaluation methodologies used are similar to those in Amendment 10 license application
  - 3D model is used for side drop analysis
  - 2D model is used for end drop analysis
  - Elastic analysis is used for NCT loads
  - Elastic-plastic analysis is used for HAC loads

TRANSNUCLEAR

Basket Analysis Approach/Methods

- **Dynamic load factors are calculated for each basket type**
- **g loads (DLF x cask baseline g load) are calculated for each basket type for NCT and HAC**
- **3D finite element model is used for side drop analysis and hand calculation is used for end drop analysis**
- **The Limit analysis provisions of ASME Code Section NG 3228.2 are used for I foot side drop analysis except for the 61BT/61BTH. For 61BT/61BTH baskets, the evaluation is based on elastic analysis**
- **Non-linear elastic-plastic analysis is used for HAC loads. The analysis methodology is similar to methodology used in Amendment 10**

Fuel Cladding Structural Analysis Methods

Loading	Methods in BWR and PWR Fuel Cladding Analyses	Previously Reviewed in the Amendment 10

HAC (intact fuel)	**BWR Fuel Cladding**
	• Side Drop
	  • 3D ANSYS (one row of fuel assemblies is modeled)
	  • Elastic analysis
	• End Drop
	  • 3D ANSYS (single fuel rod is modeled)
	  • Elastic-Plastic analysis
	• Mechanical properties from PNNL Report by Geelhood and Beyer
		• Same methodology as used in Amendment 10, Appendix T (T.3.5)
		
		• Same methodology as used in Amendment 10, Appendix T (T.3.5)

	PWR Fuel Cladding
	• Side Drop
	  • 3D ANSYS (single fuel rod is modeled)
	  • Elastic analysis
	• End Drop
	  • 3D ANSYS (single fuel rod is modeled)
	  • Elastic-Plastic analysis
	• Mechanical properties from PNNL Report by Geelhood and Beyer
		• Same methodology as used in Amendment 10, Appendix U (U.3.5)
		
		• Same methodology as used in Amendment 10, Appendix U (U.3.5)

TRANSNUCLEAR

Fuel Cladding Structural Analysis Methods

Loading	Methods Used in BWR and PWR Fuel Cladding Analysis	Basis
NCT (damaged fuel)	• Same 3D ANSYS model as for the accident side drop load is used for normal condition load stress evaluations	• Part71 Normal Transport Loads (I foot side drop and end drop)
	• Hand calculations are used to calculate the stress intensity factor (KI)	• Same methodology as used in Amendment 10, Appendix T (T.3.6.3.2) and Appendix U (U.3.6.3.2)
	• Fracture mechanics evaluations	• Fracture toughness properties are based on TN proprietary report on fuel cladding integrity test data

Summary of Structural Analysis

- **Transport Cask**
  - **Bounding payload is used for transport cask structural evaluations**
  - **Methodologies used are similar to MP197 transport cask structural evaluations (CoC 9302)**
- **Payloads (DSC)**
  - **The methodologies used for canister shell assembly and basket are similar to Amendment 10 license applications**
  - **The limit load analysis used for basket 1 foot side drop load is based on provisions of ASME Code Section NG 3228.2**
- **Fuel Cladding**
  - **Methodologies used are similar to Amendment 10 license application**
  - **Fracture toughness data used are based on TN proprietary report on fuel cladding integrity test data**