SNC000065

AP1000 DCD, Section 10.4

10.4 Other Features of Steam and Power Conversion System

This section provides descriptions of each of the principal design features of the steam and power conversion system not in Sections 10.2 and 10.3.

10.4.1 Main Condensers

The main condenser functions as the steam cycle heat sink, receiving and condensing exhaust steam from the main turbine and the turbine bypass system.

10.4.1.1 Design Basis

10.4.1.1.1 Safety Design Basis

The main condenser serves no safety-related function and therefore has no nuclear safety design basis.

10.4.1.1.2 Power Generation Design Basis

The main condenser is designed to receive and condense the full-load main steamflow exhausted from the main turbine and serves as a collection point for vents and drains from various components of the steam cycle system.

The main condenser is designed to receive and condense steam bypass flows up to 40 percent of plant full load steam flow while condensing the remaining low-pressure turbine steam flow. This condensing action is accomplished without exceeding the maximum allowable condenser backpressure for main turbine operation.

The condenser hotwell is designed to store at the normal operating water level an amount of condensate equivalent to at least three minutes of full load condensate system operating flow.

The main condenser is designed to deaerate the condensate so that the dissolved oxygen content of the condensate remains under 10 ppb during normal full power operation.

10.4.1.2 System Description

The main condenser is part of the AP1000 condensate system (CDS). The condensate system is described in subsection 10.4.7 and shown in Figure 10.4.7-1. Classification of equipment and components is given in Section 3.2. Table 10.4.1-1 provides main condenser design data.

The main condenser is a three-shell, single-pass, multipressure, spring-supported unit. Each shell is located beneath its respective low-pressure turbine. The condenser is equipped with titanium or stainless steel tubes. The titanium material provides good corrosion and erosion resisting properties. Freshwater cooled plants do not require the high level corrosion and erosion resistance provided by titanium; therefore, 304L, 316L, 904L, or AL-6X may be substituted if desired.

In a multipressure condenser, the condenser shells operate at slightly different pressures and temperatures. Condensate that is condensed in the low pressure condenser shell drains through

internal piping to the high pressure (hottest) shell where it is slightly heated and mixed with condensate of the high pressure shell. Condensate then flows through a single outlet to the suction of the condensate pumps.

The condenser shells are located below the turbine building operating floor and are supported on a spring-mounted foundation from the turbine building basemat. A rigid connection is provided between each low-pressure turbine exhaust opening and the steam inlet connections of the condenser. Two low-pressure feedwater heaters are located in the neck area of each condenser shell. Piping is installed for hotwell level control and condensate sampling.

10.4.1.2.1 System Operation

During normal power operation, exhaust steam from the low-pressure turbines is directed into the main condenser shells. The condenser also receives auxiliary system flows, such as feedwater heater vents and drains and gland sealing steam spillover and drains.

The hotwell level controller provides automatic makeup or rejection of condensate to maintain a normal level in the condenser hotwells. On low level, the makeup control valves open and admit condensate by vacuum draw to the hotwell from the condensate storage tank. On high-water level the condensate reject control valves open to divert water from the condensate pump discharge to the condensate storage tank. This rejection automatically stops when the hotwell level falls to within normal operating range. Rejection to the storage tank can be manually overridden upon an indication of high-hotwell conductivity to prevent transfer of contaminants into the condensate storage tank in the event of a condenser tube failure.

Air inleakage and noncondensable gases contained in the turbine exhaust steam are collected in the condenser and removed by the main condenser air removal system. The condenser air removal system is discussed further in subsection 10.4.2.

To protect the condenser shells and turbine exhaust hoods from overpressurization, steam relief blowout diaphragms are provided in the low-pressure turbine exhaust hoods.

The main condenser is capable of accepting up to 40 percent of full load main steam flow from the turbine bypass system. Operation of the turbine bypass system is discussed in subsection 10.4.4. In the event of high condenser pressure or trip of the circulating water pumps, the turbine bypass valves are prohibited from opening.

Distribution headers are incorporated to protect the condenser tubes, feedwater heaters located in the condenser neck, and other condenser components from turbine bypass or high-temperature drains entering the condenser shell.

The main condenser interfaces with secondary sampling system (SSS) to permit sampling of the condensate in the condenser hotwell. Also, grab sampling capability is provided for each condenser tubesheet. Should circulating water in-leakage occur, these provisions permit determination of which tube bundle has sustained the leakage. Steps may be taken to repair or plug the leaking tubes. This is performed by isolating the circulating water system from the affected water box. Plant power is reduced as necessary. This will temporarily reduce condenser capacity by approximately 50 percent. The water box is then drained and the affected tubes are

either repaired or plugged. Refer to subsection 10.3.5.5 for a discussion regarding action levels for abnormal secondary cycle chemistry conditions.

A condenser tube cleaning system performs mechanical cleaning of the circulating water side of the tubes. This cleaning, along with chemical treatment of the circulating water, reduces fouling and helps to maintain the thermal performance of the condenser.

10.4.1.3 Safety Evaluation

The main condenser has no safety-related function and therefore requires no nuclear safety evaluation.

During normal operation and shutdown, the main condenser has no significant inventory of radioactive contaminants. Radioactive contaminants may enter through a steam generator tube leak. A discussion of the radiological aspects of primary-to-secondary leakage, including anticipated operating concentrations of radioactive contaminants, is included in Chapter 11. No hydrogen buildup in the main condenser is anticipated. The failure of the main condenser and any resultant flooding will not preclude operation of any essential system since no safety-related equipment is located in the turbine building and the water cannot reach safety-related equipment located in Category I plant structures.

10.4.1.4 Tests and Inspections

The condenser water boxes are hydrostatically tested after erection. Condenser shells are tested by completely filling them with water and then testing by the fluorescent tracer method in accordance with Reference 1. Tube joints are leak tested during construction.

10.4.1.5 Instrumentation Applications

The main condenser hotwell is equipped with level control devices for control of automatic makeup and rejection of condensate. Condensate level in the condenser hotwell is indicated in the main control room and alarms on high or low level.

Condenser pressure for each condenser shell is indicated in the main control room and alarms on high level. Also, pressure instrumentation is provided to alarm prior to reaching the maximum turbine operating backpressure limit. Pressure devices are provided to trip the main turbine on high turbine exhaust pressure.

Temperature indication for monitoring condenser performance is provided.

10.4.2 Main Condenser Evacuation System

Main condenser evacuation is performed by the condenser air removal system (CMS). The system removes noncondensable gases and air from the main condenser during plant startup, cooldown, and normal operation. This action is provided by liquid ring vacuum pumps.

10.4.2.1 Design Basis

10.4.2.1.1 Safety Design Basis

The condenser air removal system serves no safety-related function and therefore has no nuclear safety design basis.

10.4.2.1.2 Power Generation Design Basis

- The condenser air removal system removes air and noncondensable gases from the condenser during plant startup, cooldown, and normal operation from the steam side of the three main condenser shells and exhausts them into the atmosphere.

- The system establishes and maintains a vacuum in the condenser during startup and normal operation by the use of liquid ring vacuum pumps.

10.4.2.2 System Description

10.4.2.2.1 General Description

Classification of equipment and components is given in Section 3.2.

The air removal system consists of four liquid ring vacuum pumps that remove air and noncondensable gases from the three condenser shells during normal operation and provide condenser hogging during startup. One vacuum pump is provided for each condenser shell, and one pump is provided as a standby. The noncondensable gases, together with a quantity of vapor, are drawn through the air cooler sections of condenser shells to the suction of the vacuum pumps. These noncondensables consist mainly of air, nitrogen, and ammonia. No hydrogen buildup is anticipated in the system (see subsection 10.4.1.3). Dissolved oxygen is present in the condensate and condenser hotwell inventory. Only trace amounts of this oxygen are released in the condenser, and the amounts are negligible compared to the amount of gas and vapor being evacuated by the system. Therefore, the potential for explosive mixtures within the condenser air removal system does not exist.

The [[circulating water system (CWS)]] provides the cooling water for the vacuum pump seal water heat exchangers. The seal water is kept cooler than the saturation temperature in the condenser to maintain satisfactory vacuum pump performance.

The noncondensable gases and vapor mixture discharged to the atmosphere are not normally radioactive. However, it is possible for the mixture to become contaminated in the event of primary-to-secondary system leakage. Air inleakage and noncondensable gases removed from the condenser and discharged by the vacuum pumps are routed to the turbine island vents, drains, and relief system (TDS) and monitored for radioactivity. Upon detection of unacceptable levels of radiation, operating procedures are implemented. A discussion of the radiological aspects of primary-to-secondary leakage, including anticipated release from the system, is included in Chapter 11.

The discharge from the condenser air removal system has a connection for taking local grab samples. Connections also allow the installation of portable, continuous sampling equipment.

Should the condenser air removal system become inoperable, a gradual increase in condenser back pressure would result from the buildup of noncondensable gases. This increase in backpressure would cause a decrease in the turbine cycle efficiency. If the condenser air removal system remains inoperable, condenser backpressure increases to the turbine trip setpoint, and a turbine trip is initiated. Loss of the main condenser vacuum causes a turbine trip but does not close the main steam isolation valves. A loss of condenser vacuum incident is described in subsection 15.2.5.

10.4.2.2.2 Component Description

The liquid ring vacuum pumps are supplied as packaged units. Major components in each package include a vacuum pump, seal water heat exchanger, seal water pump, air/water separator, and exhaust silencer. Seal water is supplied to seal the clearances in the pump and also to condense vapor at the inlet to the pump. Seal water flows through the shell side of the seal water heat exchanger and [[circulating water]] flows through the tube side. Seal water make up is provided by the condensate system (CDS).

Piping and valves are carbon steel. The piping is designed to ANSI B31.1.

10.4.2.2.3 System Operation

During startup operation, air is removed from the condenser by operating three liquid ring vacuum pumps. The fourth pump is on standby.

During normal plant operation, noncondensable gases are removed from the condenser by three vacuum pumps. If one pump trips, the condition is alarmed in the main control room, and the standby pump is started.

10.4.2.3 Safety Evaluation

The condenser air removal system has no safety-related function and therefore requires no nuclear safety evaluation.

10.4.2.4 Tests and Inspections

Testing and inspection of the system is performed prior to plant operation. A performance test is conducted on each pump in accordance with Reference 2. In addition, the pumps are hydrostatically tested.

10.4.2.5 Instrumentation Applications

The effectiveness of the air removal system is indicated by monitoring condenser pressure, using instrumentation described in subsection 10.4.1.5. Vacuum pump status (on/off) is indicated in the main control room, and pump trips are alarmed.

Volumetric flow indication is provided to monitor the quantity of exhausted noncondensable gases.

A radiation detector monitors the discharge of the condenser vacuum pumps through the turbine island vents, drains, and relief system (TDS). The radiation detector is indicated and alarmed. For process and effluent radiological monitoring and sampling systems, refer to Section 11.5.

10.4.3 Gland Seal System

10.4.3.1 Design Basis

10.4.3.1.1 Safety Design Basis

The gland seal system (GSS) serves no safety-related function and therefore has no nuclear safety design basis.

10.4.3.1.2 Power Generation Design Basis

- The gland seal system prevents air leakage into and steam leakage out of the casings of the turbine-generator.
- The system returns condensed steam to the condenser and exhausts noncondensable gases into the atmosphere via the turbine island vents, drains, and relief system.
- The presence of radioactive contamination in the noncondensable gas exhausted from the gland seal condenser, is detected by a radiation monitor in the turbine island vents, drains, and relief system.

10.4.3.2 System Description

10.4.3.2.1 General Description

The gland seal system consists of the following items and assemblies:

- Steam supply header
- Steam drains/noncondensable gas exhaust header
- Two motor driven gland seal condenser exhaust blowers
- Associated piping, valves, and controls
- Gland seal condenser
- Vent and drain lines

The quality group standards for the gland seal system are provided in Section 3.2. The gland seal system is shown in Figure 10.4.3-1.

10.4.3.2.2 System Operation

The annular space through which the turbine shaft penetrates the turbine casing is sealed by steam supplied to the rotor glands. Where the packing seals against positive pressure, the sealing steam connection acts as a leakoff. Where the packing seals against vacuum, the sealing steam either is drawn into the casing or leaks outward to a vent annulus maintained at a slight vacuum. The vent annulus receives air leakage from the outside. The air-steam mixture is drawn to the gland seal condenser.

Sealing steam is distributed to the turbine shaft seals through the steam-seal header. This sealing steam is supplied from either the auxiliary steam system (ASS), or from main steam (MSS), extracted ahead of the high-pressure turbine control valves. Steam flow to the header is controlled by the steam-seal feed valve which responds to maintain the steam-seal supply header pressure. The low and high pressure turbine gland steam pressures are maintained by pressure regulating valves provided in both main steam and auxiliary steam system piping. Excess steam is returned to the No. 1 feedwater heaters via the spillover control valve which automatically opens to bypass excess steam from the GSS.

During the initial startup phase of turbine-generator operation, steam is supplied to the gland seal system from the auxiliary steam header which is supplied from the auxiliary boiler. At times other than initial startup, turbine-generator sealing steam is supplied from the MSV and CV gland steam leak-off, the auxiliary steam system, or from main steam.

At the outer ends of the glands, collection piping routes the mixture of air and excess seal steam to the gland seal condenser. The gland seal condenser is a shell and tube type heat exchanger where the steam-air mixture from the turbine seals is discharged into the shell side and condensate flows through the tube side as a cooling medium. The gland seal condenser internal pressure is maintained at a slight vacuum by a motor-operated blower. There are two 100-percent blowers mounted in parallel. Condensate from the steam-air mixture drains to the main condenser while noncondensables are exhausted to the turbine island vents, drains, and relief system through a common discharge line shared by the vapor extractor blowers.

The mixture of noncondensable gases discharged from the gland seal condenser blower is not normally radioactive; however, in the event of significant primary-to-secondary system leakage due to a steam generator tube leak, it is possible to discharge radioactively contaminated gases. The headered discharge line vents to the turbine vents, drains, and relief system which contains a radiation monitor for detection of radioactivity. Upon detection of unacceptable levels of radiation, operating procedures are implemented. A description of the radiological aspects of primary-to-secondary system leakage is included in Chapter 11.

Failure of the gland seal system normally results in no release of radioactivity to the atmosphere.

10.4.3.3 Safety Evaluation

The gland seal system has no safety-related function and therefore requires no nuclear safety evaluation.

10.4.3.4 Tests and Inspections

The system is tested in accordance with written procedures during the initial testing and operation program. Since the gland seal system is in use and essential parameters are monitored during normal plant operation, the satisfactory operation of the system components demonstrates system operability.

10.4.3.5 Instrumentation Applications

A pressure controller is provided to maintain the steam-seal supply header pressure by providing signals to the steam-seal feed valve. Excess steam flow is handled by the gland spillover control valve which discharges to the No. 1 feedwater heaters.

The gland seal condenser is monitored for shell side pressure and internal liquid level.

Pressure indication with appropriate alarm is provided for monitoring the operation of the system. A radiation detector with an alarm is provided in the turbine island vents, drains, and relief system to detect radiation associated with primary-to-secondary side leakage in the steam generators.

10.4.4 Turbine Bypass System

The turbine bypass system provides the capability to bypass main steam from the steam generators to the main condenser in a controlled manner to dissipate heat and to minimize transient effects on the reactor coolant system during startup, hot shutdown, cooldown, and step-load reductions in generator load. The turbine bypass system is also called the steam dump system, and is part of the main steam system (MSS).

10.4.4.1 Design Basis

10.4.4.1.1 Safety Design Basis

The turbine bypass system serves no safety-related function and therefore has no nuclear safety design basis. The nonsafety-related turbine bypass valves are credited in a single failure analysis to mitigate the event for those cases in which the rupture of the main steam or feedwater piping inside containment is the postulated initiating event.

10.4.4.1.2 Power Generation Design Basis

The turbine bypass system has the capacity to bypass 40 percent of the full load main steam flow to the main condenser.

The turbine bypass system bypasses steam to the main condenser during plant startup and permits a manually controlled cooldown of the reactor coolant system to the point where the normal residual heat removal system can be placed in service.

The turbine bypass system total flow capacity, in combination with bypass valve response time, reactor coolant system design, and reactor control system response, is sufficient to reduce challenges to the main steam power-operated relief valves, main steam safety valves, and

pressurizer safety valves during: reactor trip from 100-percent power; and 100-percent load rejection or turbine trip from 100-percent power without reactor trip.

10.4.4.2 System Description

10.4.4.2.1 General Description

The turbine bypass system is part of the main steam system and is shown on Figure 10.3.2-2. The system consists of a manifold connected to the main steam lines upstream of the turbine stop valves and of lines from the manifold with regulating valves to each condenser shell.

The capacity of the system, along with the NSSS control systems, provides the capability to meet the design requirement bases specified in subsection 10.4.4.1.2. For power changes less than or equal to a 10 percent change in electrical load, the turbine bypass system is not actuated; the total power change is handled by the reactor power control, pressurizer level control, pressurizer pressure control, and the steam generator level control systems described in Section 7.7. For load rejections greater than 10 percent but less than 50 percent, or a turbine trip from 50 percent power or less, the turbine bypass system operates in conjunction with the same control systems used for the 10 percent or less load change to meet the design basis requirements specified in subsection 10.4.4.1.2. For load rejections greater than 50 percent power, the rapid power reduction system (described in Section 7.7) operates in conjunction with the previously mentioned control systems to meet the design basis requirements. The rapid power reduction system is designed to rapidly reduce the nuclear power to a value that can be handled by the turbine bypass system. Certain transient conditions or system degradations beyond those of subsection 10.4.4.1.2 may result in a reactor trip and may result in the operation of the main steam power operated relief and safety valves.

10.4.4.2.2 Component Description

The turbine bypass valves are globe valves and are electropneumatically operated. The valves fail to a closed position upon loss of air or electric signal. A modulating positioner responds to the electric signal from the control system and provides an appropriate air pressure to the valve actuator for modulating the valve open.

Solenoid valves located in the air line to each bypass valve actuator serve as protective interlocks for bypass valve actuation and for tripping the valve open or closed. One of the solenoid valves is energized, when required, to bypass the modulating positioner and provide full air pressure to the actuator diaphragm to quickly trip open the bypass valve. Other solenoid valves, when deenergized, block the air supply to the actuator and vent the actuator diaphragm; this action blocks the bypass valve from opening, or closes the valve if opened.

Two of the blocking solenoid valves for each turbine bypass valve are redundant and block bypass valve actuation upon low reactor coolant system T_{avg}. This minimizes the possibility of excessive reactor coolant system cooldown. However, the low T_{avg} block can be manually bypassed for the bypass valves that are designated as cooldown valves to allow operation during plant cooldown.

Another blocking solenoid valve prevents actuation of the bypass valve when the condenser is not available. This solenoid valve also prevents unblocking the steam dump valve when the condenser is available unless one of the following signals exist:

- High negative rate of change of turbine pressure
- Reactor trip
- Control system in the steam header pressure control mode (see subsection 10.4.4.3)

10.4.4.3 System Operation

The turbine bypass system has two modes of operation:

- T_{avg} control mode
- Pressure control mode

The T_{avg} control mode is the normal at-power control mode. The turbine bypass system is regulated by the difference between the measured reactor coolant system average coolant temperature (T_{avg}) and a T_{avg} setpoint derived from turbine first-stage impulse pressure. Two operational modes of the T_{avg} control mode are possible. The first mode is the load rejection steam dump controller, which prevents a large increase in reactor coolant temperature following a large, sudden load decrease. Turbine bypass valve control in conjunction with reactor power control results in a match between reactor power and turbine load. The second mode is the plant trip steam dump controller, which automatically defeats the load rejection steam dump controller following a reactor trip and provides a controlled rate of removal of decay heat, which in turn decreases reactor coolant system T_{avg}.

The pressure control mode is manually selected and is used to remove decay heat during plant startup and cooldown. The difference between steam header pressure and a pressure setpoint is used to control the turbine bypass flow. The pressure setpoint is manually adjustable and is based on the desired reactor coolant system temperature. The turbine bypass system is operated in the pressure control mode when the plant is at no-load and there is no turbine load reference. There are three pressure control operational modes as follows:

- Header pressure – control derived from the difference between header pressure and pressure setpoint

- Cooldown – control derived from the manually selected desired reactor coolant system cooldown rate and the target reactor coolant system temperature

- Manual – control derived from direct use of valve loading signals.

The bypass valves are divided into two banks. The banks are opened sequentially; the second bank starts to open only after a demand signal that is greater than the full-open demand of the first bank is generated.

The turbine bypass valves have two stroke control modes, modulate and trip open/close. If the demand signal is greater than the full open demand for the particular bank of valves, a trip open

demand signal is generated. When the demand signal decreases below the full-open demand, the trip open demand clears and the valves return to the modulating mode. Additional description of steam dump logic is given in Section 7.7.

Chapter 15 addresses credible single failures of the turbine bypass system. If the bypass valves fail-open, additional heat load is placed on the condenser. If this load is great enough, the turbine is tripped on high condenser pressure. Ultimate overpressure protection for the condenser is provided by turbine rupture discs. If the bypass valves fail-closed, the power operated relief valves (reference subsection 10.3.2.2.3) permit controlled cooldown of the reactor.

10.4.4.4 Safety Evaluation

There is no safety-related equipment in the vicinity of the turbine bypass system. The high-energy lines of the turbine bypass system are located in the turbine building.

The failure of a turbine bypass high-energy line will not disable the turbine speed control system. The turbine speed control system is designed in such a manner that its failure will cause a turbine trip. Additional information concerning speed control can be found in subsection 10.2.2.3.

10.4.4.5 Inspection and Testing Requirements

Before the system is placed in service, turbine bypass valves are tested to verify they function properly. The steam lines are hydrostatically tested to confirm leaktightness. System piping and valves are accessible for inspection. No inservice inspection and testing is required except for the turbine bypass valves which are included in the inservice program as discussed in subsection 3.9.6.

10.4.4.6 Instrumentation Applications

Turbine bypass controls are described in Section 7.7. Controls in the main control room are provided for selection of the system operating mode. Pressure indication and valve position indication are also provided in the main control room.

10.4.5 Circulating Water System

10.4.5.1 Design Basis

10.4.5.1.1 Safety Design Basis

The circulating water system (CWS) serves no safety-related function and therefore has no nuclear safety design basis.

10.4.5.1.2 Power Generation Design Basis

[[The circulating water system supplies cooling water to remove heat from the main condensers. The CWS and/or makeup water from the raw water system supplies cooling water to the turbine building closed cooling water system (TCS) heat exchangers and the condenser vacuum pump

seal water heat exchangers under varying conditions of power plant loading and design weather conditions.]]

10.4.5.2 System Description

10.4.5.2.1 General Description

Classification of components and equipment in the circulating water system is given in Section 3.2. The circulating water system and cooling tower are subject to site specific modification or optimization. The system described here is applicable to a broad range of sites. The final system configuration will be determined as discussed in subsection 10.4.12. Table 10.4.5-1 provides circulating water system design data based on a conceptual design.

[[The circulating water system consists of three 33-1/3-percent-capacity circulating water pumps, one hyperbolic natural draft cooling tower, and associated piping, valves, and instrumentation.]]

Makeup water to the CWS is provided by the raw water system (RWS). In addition, water chemistry is controlled by a local chemical feed system.

10.4.5.2.2 Component Description

Circulating Water Pumps

[[The three circulating water pumps are vertical, wet pit, single-stage, mixed-flow pumps driven by electric motors. The pumps are mounted in an intake structure, which is connected to the cooling tower by a canal. The three pump discharge lines connect to a]] common header which connects to the two inlet water boxes of the condenser [[and may also supply cooling water to the TCS and condenser vacuum pump seal water heat exchangers]]. [[Each pump discharge line has a motor-operated butterfly valve located between the pump discharge and the main header. This permits isolation of one pump for maintenance and allows two-pump operation.]]

[[Cooling Tower]]

[[The cooling tower is site specific with this description provided as a reference design using a hyperbolic natural draft structure. Operation of the cooling tower during conditions that are more restrictive than design conditions may result in higher condenser back pressure.]]

[[The cooling tower has a basin which serves as storage for the circulating water inventory and allows bypassing of the cooling tower during cold weather operations. This basin is connected to the intake of the circulating water pumps by a canal.]]

[[Cooling Tower Makeup and Blowdown]]

The circulating water system makeup is provided by the raw water system. [[Makeup to and blowdown from the circulating water system is controlled by the makeup and blowdown control valves. These valves, along with a local chemical feed system provide chemistry control in the circulating water in order to maintain a noncorrosive, nonscale-forming condition and limit biological growth in circulating water system components.]]

[[This makeup water may be used as a source of cooling water for the TCS and condenser vacuum pump seal water heat exchangers.]]

Piping and Valves

[[The underground portions of the circulating water system piping are constructed of concrete pressure piping. The remainder is carbon steel, with an internal coating of a corrosion- resistant compound.]] Motor-operated butterfly valves are provided in each of the circulating water lines at their inlet to and exit from the condenser shell to allow isolation of portions of the condenser. [[Control valves provide regulation of cooling tower blowdown and makeup.]]

The circulating water system is designed to withstand the maximum operating discharge pressure of the circulating water pumps. [[Piping includes the expansion joints, butterfly valves, condenser water boxes, and tube bundles. The piping design pressure is site specific and therefore will be provided as discussed in subsection 10.4.12.1.]]

Circulating Water Chemical Injection

Circulating water chemistry is maintained by a local chemical feed skid at the CWS cooling tower. Circulating water system chemical feed equipment injects the required chemicals into the circulating water [[at the CWS cooling tower basin area.]] This maintains a noncorrosive, nonscale-forming condition and limits the biological film formation that reduces the heat transfer rate in the condenser and the heat exchangers supplied by the circulating water system.

The specific chemicals used within the system are determined by the site water conditions and therefore will be provided as discussed in subsection 10.4.12. The chemicals can be divided into six categories based upon function: biocide, algaecide, pH adjuster, corrosion inhibitor, scale inhibitor, and a silt dispersant. The pH adjuster, corrosion inhibitor, scale inhibitor, and dispersant are metered into the system continuously or as required to maintain proper concentrations. The biocide application frequency may vary with seasons. [[The algaecide is applied, as necessary, to control algae formation on the cooling tower.]]

Addition of biocide and water treatment chemicals is performed by local chemical feed injection metering pumps and is adjusted as required. [[Chemical concentrations are measured through analysis of grab samples from the CWS.]] Residual chlorine is measured to monitor the effectiveness of the biocide treatment.

[[Chemical injections are interlocked with each circulating water pump to prevent chemical injection when the circulating water pumps are not running.]]

10.4.5.2.3 System Operation

[[The three circulating water pumps take suction from the circulating water intake structure and circulate the water through the TCS, the condenser vacuum pump seal water heat exchangers, and the tube side of the main condenser and back through the piping discharge network to the cooling tower. The natural draft cooling tower cools the circulating water by discharging the water over a network of baffles in the tower. The water then falls through fill material to the basin beneath the tower and, in the process, rejects heat to the atmosphere. Provision is made during cold weather to

direct a portion of the circulating water flow into freeze-prevention spray headers on the periphery of the cooling tower. Air flowing through the peripheral spray is thus heated and allows deicing in the central cooling tower spray baffles.]]

[[The flow to the cooling tower can be diverted directly to the basin, bypassing the cooling tower internals. This is accomplished by opening the bypass valve while operating one of the circulating water pumps. The bypass is normally used only during plant startup in cold weather or to maintain circulating water system temperature above 40°F while operating at partial load during periods of cold weather.]]

The raw water system supplies makeup water [[to the cooling tower basin to replace water losses due to evaporation, wind drift, and blowdown. A separate connection is provided between the RWS and CWS to initially fill the CWS piping. This line connects to the CWS downstream of the CWS pump isolation valves.]]

A condenser tube cleaning system is installed to clean the circulating water side of the main condenser tubes. [[Blowdown from the circulating water system is taken from the discharge of the circulating water system pumps and is discharged to the plant outfall.]]

The circulating water system is used to supply cooling water to the main condenser to condense the steam exhausted from the main turbine. If the [[circulating water pumps, the cooling tower, or the circulating water piping malfunctions such that]] condenser backpressure rises above the maximum allowable value, the main condenser will no longer be able to adequately support unit operation. Cooldown of the reactor may be accomplished by using the power-operated atmospheric steam relief valves or safety valves rather than the turbine bypass system when the condenser is not available.

Passage of condensate from the main condenser into the circulating water system through a condenser tube leak is not possible during power generation operation, since the circulating water system operates at a greater pressure than the condenser.

Turbine building closed cooling water in the TCS heat exchangers is maintained at a higher pressure than the [[circulating water]] to prevent leakage of the [[circulating water]] into the closed cooling water system.

Cooling water to the condenser vacuum pump seal water heat exchangers is supplied from the [[circulating water]] system. Cooling water flow from the [[circulating water]] system is normally maintained through all four heat exchangers to facilitate placing the spare condenser vacuum pump in service. Isolation valves are provided for the condenser vacuum pump seal water heat exchanger cooling water supply lines to facilitate maintenance.

Small circulating water system leaks in the turbine building will drain into the waste water system. Large circulating water system leaks due to pipe failures will be indicated in the control room by a loss of vacuum in the condenser shell. The effects of flooding due to a circulating water system failure, such as the rupture of an expansion joint, will not result in detrimental effects on safety-related equipment since there is no safety-related equipment in the turbine building and the base slab of the turbine building is located at grade elevation. Water from a system rupture will run out of the building through a relief panel in the turbine building west wall before the level

could rise high enough to cause damage. Site grading will carry the water away from safety-related buildings.

[[The cooling tower is located so that collapse of the tower has no potential to damage equipment, components, or structures required for safe shutdown of the plant.]]

10.4.5.3 Safety Evaluation

The circulating water system has no safety-related function and therefore requires no nuclear safety evaluation.

10.4.5.4 Tests and Inspections

Components of the circulating water system are accessible as required for inspection during plant power generation. [[The circulating water pumps are tested in accordance with standards of the Hydraulic Institute.]] Performance, hydrostatic, and leakage tests associated with preinstallation and preoperational testing are performed on the circulating water system. The system performance and structural and leaktight integrity of system components are demonstrated by continuous operation.

10.4.5.5 Instrumentation Applications

[[Instrumentation provided indicates the open and closed positions of motor-operated butterfly valves in the circulating water piping. The motor-operated valve at each pump discharge is interlocked with the pump so that the pump trips if the discharge valve fails to reach the full-open position shortly after starting the pump.]]

[[Local grab samples are used to periodically test the circulating water quality to limit harmful effects to the system piping and valves due to improper water chemistry.]]

[[Pressure indication is provided on the circulating water pump discharge lines.]] A differential pressure transmitter is provided between one inlet and outlet branch to the condenser. This differential pressure transmitter is used to determine the frequency of operating the condenser tube cleaning system (CES).

Temperature indication is supplied [[on the common CWS inlet header to the TCS heat exchanger trains.]] This temperature is also representative of the inlet cooling water temperature to the main condenser.

A flow element is provided [[on the common discharge line from the TCS heat exchangers to allow monitoring of the total flow through the TCS heat exchangers.]] Flow measurement for the raw water makeup [[to the cooling tower and for the cooling tower blowdown]] is also provided.

[[Level instrumentation provided in the circulating water pump intake structure activates makeup flow from the RWS to the cooling tower basin when required. Level instrumentation also annunciates a low-water level in the pump structure and a high-water level in the cooling tower basin.]]

The circulating water chemistry is controlled [[by cooling tower blowdown and chemical addition,]] to maintain the circulating water with an acceptable Langelier Index range or an acceptable Stability Index range as discussed in subsection 10.4.12.1. [[The system accomplishes this by regulating the blowdown valve. This regulation causes the tower basin water level to fluctuate. The fluctuation is sensed by a level controller which operates the makeup valve to cooling tower makeup.]]

The control approach is to allow the makeup water to concentrate naturally to its upper limit. Provisions are made to add chemicals for pH control.

The cycles of concentration [[at which the cooling tower is operated]] is dependent on the quality of the cooling tower makeup water. [[Cooling tower blowdown is discharged to the waste water system.]]

Monitoring of the circulating water system is performed through the data display and processing system. Control functions are performed by the plant control system. Appropriate alarms and displays are available in the control room. See Chapter 7.

10.4.6 Condensate Polishing System

The condensate polishing system (CPS) can be used to remove corrosion products and ionic impurities from the condensate system during plant startup, hot standby, power operation with abnormal secondary cycle chemistry, safe shutdown, and cold shutdown operations.

10.4.6.1 Design Basis

10.4.6.1.1 Safety Design Basis

The condensate polishing system serves no safety-related function and therefore has no nuclear safety-related design basis.

10.4.6.1.2 Power Generation Design Basis

The power generation design bases are to:

- Remove corrosion products, dissolved solids and other impurities from the condensate system and maintain a noncorrosive environment within the condensate, feedwater and steam generator systems
- Provide polishing capacity for processing one-third of the maximum condensate flow in a sidestream arrangement
- Provide polishing capability during normal startup and shutdown operations of the plant
- Provide for plant operation with a “continuous” condenser tube leak of .001 gpm or a “faulted” leak of 0.1 gpm until repairs can be completed or until an orderly shutdown is achieved

10.4.6.2 System Description

The condensate polishing system is used during operating modes of startup, hot standby, power operation with abnormal secondary cycle chemistry, safe shutdown, and cold shutdown. Classification of components in the CPS is identified in Section 3.2. The major components for the condensate polishing system are described below. The condensate polishing system is shown in Figure 10.4.6-1.

Deep Bed Mixed Resin Polisher

The polisher vessel is constructed of carbon steel with a protective rubber lining on the inside of the vessel. Leachable sulphur of the rubber lining is less than 20 ppb. Level indication (site glass) is provided.

Resin Trap

The resin trap is located in the effluent piping of the vessel. Differential pressure across the trap is monitored.

Spent Resin Tank

The spent resin tank is constructed of carbon steel with an interior protective rubber lining. It is used for storage of exhausted or spent resin prior to shipping offsite for regeneration or disposal.

Resin Addition Hopper and Eductor

The resin addition hopper stores regenerated or new resin and the eductor is used to inject resin into the polisher vessel. The hopper is constructed of carbon steel. The eductor uses demineralized water to transfer the resin to the vessel.

10.4.6.3 System Operation

The condensate polishing system cleans up the condensate during startup to meet condensate and feedwater system water chemistry specifications as described in subsection 10.3.5. The condensate system is recirculated to the hotwell during startup until the desired water quality is attained. Condensate system startup operation is described in subsection 10.4.7. Utilization of the condensate polishing system during startup assists in minimizing the startup duration of the plant.

During power operation, the condensate polishers are used only when abnormal secondary cycle conditions exist. This allows for continued operation of the plant with a “continuous” condenser tube leak of 0.001 gpm or a “faulted” leak of 0.1 gpm until repairs can be made or until an orderly shutdown is achieved. The condensate polisher flow is controlled by the condensate polisher bypass valve.

Exhausted or spent resin is removed from the vessel and replaced with new or regenerated resin. Resin replacement requires the polisher vessel to be out of service. Spent resin is transferred directly from the polisher vessel to a truck or to the spent resin tank until it can be removed offsite. Spent condensate polishing resin will normally be nonradioactive and not require any special

packaging prior to disposal. In the event of radioactive contamination of the resin in a vessel, temporary shielding is installed (if required). Radioactive resin is transferred directly from the condensate polishing vessel or from the spent resin tank to a temporary processing unit. Radiation monitors associated with the steam generator blowdown system, the steam generator system (main steam), and the turbine island vents, drains and relief system provide the means to determine if the secondary side is radioactively contaminated. Subsection 11.4.2 describes waste management of radioactively contaminated resin. A spill containment barrier is provided to contain spent resin tank or condensate polisher vessel contents in the event of a tank failure. The spill containment barrier is a curb surrounding the area containing the spent resin tank and condensate polisher vessel with sufficient height to contain the contents of a full tank or vessel.

The procedures for radiation protection and the handling and processing of radwaste are addressed in Chapters 11 and 12. Shielding design is described in Section 12.3.

Upon removal of the exhausted resin from the polisher vessel, the vessel is rinsed and the new resin is placed in the vessel using the resin addition hopper and eductor. After the new cation and anion resins are placed in the vessel, demineralized water is added until the water level is just above the resin bed. Compressed air from the plant service air system is injected up through the resin bed to fluidize and thoroughly mix the resins. Prior to plant startup, a new resin bed is rinsed and resin performance is verified, with flow through the vessel discharged to the waste water system. The polisher vessel is then placed in operation or on standby.

10.4.6.4 Safety Evaluations

The condensate polishing system has no safety-related function and therefore requires no nuclear safety evaluation.

10.4.6.5 Tests and Inspections

The condensate polishing system is operationally checked prior to plant startup to verify proper functioning of the polisher vessels and associated instrumentation and controls.

10.4.6.6 Instrument Applications

When the condensate polishing system is in service, polishing system differential pressure instrumentation provides a control signal to the condensate bypass valve which maintains sufficient flow through the polisher vessel for optimum performance. The polisher is removed from service when: 1) a high differential pressure exists across the polisher vessel, 2) the ion exchange resin capacity becomes exhausted as evidenced by a high effluent conductivity, or 3) at the completion of a pre-determined volume through-put. The resin trap is monitored for high differential pressure and an alarm indicates the need to backwash the trap.

10.4.7 Condensate and Feedwater System

The condensate and feedwater system provides feedwater at the required temperature, pressure, and flow rate to the steam generators. Condensate is pumped from the main condenser hotwell by the condensate pumps, passes through the low-pressure feedwater heaters to the feedwater pumps, and is then pumped through the high-pressure feedwater heaters to the steam generators.

The condensate and feedwater system is composed of components from the condensate system (CDS), main and startup feedwater system (FWS), and steam generator system (SGS). The startup feedwater system is described in subsection 10.4.9.

10.4.7.1 Design Basis

10.4.7.1.1 Safety Design Basis

The safety-related portion of the system is required to function following a design basis accident (DBA) to provide containment and feedwater isolation, as discussed below, for the main lines routed into containment.

The portion of the feedwater system from the steam generator inlets outward through the containment up to and including the main feedwater isolation valves (MFIVs) is constructed in accordance with the requirements of ASME Code, Section III for Class 2 components and is designed to seismic Category I requirements. The portion of the feedwater system from the main feedwater isolation valve (MFIV) inlets to the piping restraints at the interface between the auxiliary building and the turbine building is constructed in accordance with the requirements of ASME Code, Section III for Class 3 components and is designed to seismic Category I requirements.

The system provides redundant isolation valves, as described below, for the main feedwater lines routed into containment. The isolation valves close after receipt of an isolation signal in sufficient time to limit the mass and energy release to containment consistent with the containment analysis presented in Chapter 6.

- The safety-related portions of the feedwater system are designed to remain functional after a safe shutdown earthquake (SSE) and to perform their intended function of isolating feedwater flow following postulated events.

- The safety-related portions of the feedwater system are protected from wind and tornado effects, as described in Section 3.3; flood protection is described in Section 3.4; missile protection is described in Section 3.5; protection against dynamic effects associated with the postulated rupture of piping is described in Section 3.6; seismic protection is described in Section 3.7; environmental design is described in Section 3.11; and fire protection is described in Section 9.5.

- The portion of the feedwater system to be constructed in accordance with ASME Code, Section III, Class 2 requirements is provided with access to welds and removable insulation for inservice inspection, in accordance with ASME Code, Section XI. The portion of the feedwater system to be constructed in accordance with ASME Code, Section III, Class 3 requirements is also designed and configured to accommodate inservice inspection in accordance with ASME Code, Section XI.

- The condensate and feedwater system classification is described in Section 3.2. The control functions and power supplies are described in Chapters 7 and 8.

- For a main feedwater or main steam line break (MSLB) inside the containment, the condensate and feedwater system is designed to limit high energy fluid to the broken loop. High energy line break for piping not qualified for leak before break (LBB) criteria is discussed in subsection 3.6.3.

- Double valve main feedwater isolation is provided via the main feedwater control valve (MFCV) and main feedwater isolation valve (MFIV). Valves fail closed on loss of actuating fluid. Both valves are designed to close automatically on main feedwater isolation signals, an appropriate engineered safety features (ESF) isolation signal, within the time established within the Technical Specification, Section 16.1.

- The MFCVs provide backup isolation to their respective containment isolation valves in order to terminate feedwater flow. The MFCVs are located in the auxiliary building in piping designed to ASME Code, Section III, Class 3 seismic Category I requirements. These valves are components of the steam generator system (SGS).

- For a steam generator tube rupture event, positive and redundant isolation is provided for the main feedwater system (MFIV and MFCV) with ESF isolation signals generated by the protection and safety monitoring system.

10.4.7.1.2 Power Generation Design Basis

- The condensate and feedwater system provides a continuous feedwater supply to the two steam generators at the required pressures and temperatures for steady-state and anticipated transient conditions.

- Plant operation is possible at 100-percent power with one condensate pump out of service, and approximately 70-percent power with one booster/main feedwater pump assembly out of service.

- Plant operation is possible at greater than 70-percent power with one feedwater heater string out of service.

- The feedwater and condensate pumps and pump control system are designed so that loss of one booster/main feedwater pump assembly or one condensate pump does not result in trip of the turbine-generator or reactor.

- The pumps and other system components are designed so that the condensate, feedwater booster and feedwater pumps are protected from running with very low net positive suction heads without tripping on short transient low levels in a hotwell or deaerator tank.

- The condenser hotwell is designed to store, at the normal operating water level, an amount of condensate equivalent to at least three minutes of full-load condensate system operating flow.

- The system is able to accommodate ten-percent step or five-percent per minute ramp load changes without significant deviation from the programmed water levels in the steam generators or major effect on the feedwater system.

- The system has the capability of accommodating the necessary changes in feedwater flow to the steam generators with the steam pressure increase resulting from a 100-percent load rejection.

- The booster/main feedwater pumps are tripped simultaneously with the feedwater isolation signal to close the main feedwater isolation valves. In addition, the same isolation signal closes the isolation valve in the cross connect line between the main feedwater pump discharge header and the startup feedwater pump discharge header.

- A check valve, which acts on reverse pressure differential, is provided in the main feedwater line to each steam generator between the MFIV and the containment penetration. The check valve is designed to withstand the forces encountered when closing after a main feedwater line rupture. The valves perform no safety-related function but will serve to prevent blowdown from more than one steam generator during feedline break while the appropriate engineered safety features signal is generated to isolate using the MFIV and MFCV. During normal or upset conditions, the function of these check valves is to prevent reverse flow from the steam generators whenever the feedwater system is not in operation.

10.4.7.2 System Description

10.4.7.2.1 General Description

The condensate and feedwater system is shown schematically in Figure 10.4.7-1, and in Figure 10.3.2-1. Classification of equipment and components is given in Section 3.2.

The condensate and feedwater system supplies the steam generators with heated feedwater in a closed steam cycle using regenerative feedwater heating. The condensate and feedwater system is composed of the condensate system, the main feedwater system, and portions of the steam generator system. The condensate system collects condensed steam from the condenser and pumps condensate forward to the deaerator. The feedwater system takes suction from the deaerator and pumps feedwater forward to the steam generator system utilizing high-pressure main feedwater pumps. The steam generator system contains the safety-related piping and valves that deliver feedwater to the steam generators. The condensate and feedwater systems are located within the turbine building, and the steam generator system is located within the auxiliary building and containment.

The main portion of the feedwater flow originates from condensate pumped from the main condenser hotwell by the condensate pumps. The main condenser hotwell receives makeup from the condensate storage tank. (Refer to subsection 9.2.4 for a description of the condensate storage system.) The condensate passes in sequence through: the condensate polishing system or condensate polishing bypass (described in subsection 10.4.6); the gland steam condenser; three strings of low-pressure heaters, each string consisting of a No. 1 and No. 2 low-pressure heater; two strings of low-pressure heaters No. 3 and No. 4; the No. 5 open low pressure heater (deaerator); the three parallel booster/main feedwater pumps; and two strings of high-pressure heaters, No. 6 and No. 7. Feedwater is pumped to the plant's two steam generators through each generator's respective flow element, control valve, feedwater isolation valve, and check valve. The balance of the plant's feedwater flow is provided by drains from the main steam system moisture

separator reheater, drains from the No. 6 and No. 7 feedwater heaters, and steam condensed in the deaerator. These flows are collected in the deaerator and pumped forward in the feedwater cycle. A portion of the condensate flow downstream of the condensate polishers is diverted to provide cooling to the steam generator blowdown system heat exchangers before returning to the main condensate flow at the deaerator.

During plant startup, three recirculation paths facilitate system cleanup and adjustment of water quality prior to initiating feed to the steam generators. These cleanup loops are designed for approximately 33 percent of design condensate flow and include a hotwell recirculation loop, a deaerator recirculation loop, and a third recirculation loop from downstream of the No. 7 feedwater heaters. Steam is provided to the deaerating feedwater heater from the auxiliary steam supply system to preheat the feedwater to over 200°F during the initial cleanup and startup recirculation operations. This preheating action, along with chemical addition, minimizes formation of iron oxides in the condensate system.

The condensate polishing system is described in subsection 10.4.6 and may be in service or bypassed. Each of the two main feedwater lines to the two steam generators contains a feedwater flow element, a main feedwater control valve, a main feedwater isolation valve, and a check valve.

The turbine island chemical feed system (CFS) described in subsection 10.4.11 is provided to inject an oxygen scavenging agent and a pH control agent into the condensate pump discharge downstream of the condensate polishers and an oxygen scavenging agent and pH control agent upstream of the feedwater booster pump suction. Injection points are shown in Figure 10.4.7-1. During normal power operation, the addition of an oxygen scavenging agent and pH control agent to the condensate system downstream of the condensate demineralizers is in automatic control, with manual control available. The added chemicals control pH according to the condensate and feedwater system chemistry requirements and establish an oxygen scavenging agent residual in the feedwater system. The oxygen scavenger agent and pH control agent will be selected as discussed in subsection 10.4.12.

A cross connection from the main feedwater pump discharge header to the startup feedwater header allows any booster/main feedwater pump to supply feedwater to the startup feedwater control valves. The startup feedwater system is described in subsection 10.4.9. Thus, feedwater from the deaerator storage tank can be supplied by the booster/main feedwater pumps through the startup feedwater connections to the steam generators during hot standby, plant startup and low power operation. A check valve in the cross connection piping prevents the startup feedwater pumps from supplying the main feedwater header, and a nonsafety-related isolation valve in the cross connection piping automatically closes upon the feedwater isolation signal that trips the main feedwater pumps.

A condensate and feedwater failure analysis for safety-related components is presented in Table 10.4.7-1. Occurrences which produce an increase in feedwater flow or decrease in feedwater temperature result in increased heat removal from the reactor coolant system which is compensated for by control system action, as described in subsection 10.4.7.5. Events which produce the opposite effect (i.e., decreased feedwater flow or increased feedwater temperature) result in reduced heat transfer in the steam generators. Normally, automatic control system action is available to adjust feedwater flow to prevent excess energy accumulation in the reactor coolant

system, and the increasing reactor coolant temperature provides a negative reactivity feedback, reducing reactor power. In the absence of normal control action, either the high-outlet temperature or the high-pressure trips of the reactor protection system are available to provide reactor safety. Loss of all feedwater is examined in Section 15.3.

Refer to subsection 5.4.2.2 for a description of steam generator design features to prevent fluid flow water hammer. The main feedwater connection on each of the steam generators is the highest point of each feedwater line downstream of the MFIV. The feedwater lines contain no high-point pockets that could trap steam and lead to water hammer. The horizontal pipe length from the main nozzle to the downward turning elbow of each steam generator is minimized.

10.4.7.2.2 Component Description

The feedwater system is constructed in accordance with the requirements of ASME Code, Section III for Class 2 components and seismic Category I requirements from the steam generator out through the MFIVs. From upstream of the MFIV to the restraint at the interface between the auxiliary building and turbine building, the system is constructed in accordance with ASME Code, Section III for Class 3 components and seismic Category I requirements. The remaining piping of the condensate and feedwater system meets ANSI B31.1 requirements. Safety-related feedwater piping materials are described in subsection 10.3.6.

Feedwater Piping

Feedwater is supplied to each of the two steam generators by a main feedwater line during normal operation. Each of the lines is anchored at the auxiliary building/turbine building interface, and has sufficient flexibility to provide for relative movement of the steam generators resulting from thermal expansion.

The feedwater system and steam generator design minimize the potential for waterhammer and subsequent effects. Details are provided in Subsection 5.4.2.2. Feedwater piping analysis considers the following factors and events in the evaluation:

- Steam generators with top feed ring design (BTP ASB 10-2)
- Main feedwater check valves due to line breaks (BTP MEB 3-1)
- Spurious isolation or feedwater control valve trips
- Pump trips
- Deaerator regulating flow control valve trip
- Local feedwater piping, anchors, supports, and snubbers, as applicable

Feedwater Isolation Valves

One MFIV is installed in each of the two main feedwater lines outside the containment and downstream of the feedwater control valve. The MFIVs are installed to prevent uncontrolled blowdown from the steam generators in the event of a feedwater pipe rupture. The main feedwater check valve provides backup isolation. In the event of a secondary side pipe rupture inside the containment, the MFIVs limit the quantity of high energy fluid that enters the containment

through the broken loop and limit cooldown. The MFCV provides backup isolation to limit cooldown and high energy fluid addition.

Each MFIV is a bidirectional wedge type gate valve composed of a valve body that is welded into the system pipeline. The MFIV gate valve is provided with a hydraulic/pneumatic actuator. The valve actuator is supported by the yoke, which is attached to the top of the body. The valve actuator consists of a hydraulic cylinder with a stored energy system to provide emergency closure of the isolation valve. The energy to operate the valve is stored in the form of compressed nitrogen contained in one end of the actuator cylinder. The MFIV is maintained in a normally open position by high-pressure hydraulic fluid. For emergency closure, redundant solenoids are energized resulting in the high-pressure hydraulic fluid being dumped to a fluid reservoir.

The feedwater isolation functional diagram is shown in Figure 7.2-1. To provide safety function actuation, the redundant actuation solenoid valves are powered from separate Class 1E power divisions. Redundant control and indication channels are provided for each of the isolation valves. Provisions are made for inservice inspection of the isolation valves.

Feedwater Control Valves

The MFCVs are air-operated control valves with the dual purpose of controlling feedwater flow rate as well as providing backup isolation of the feedwater system. The valve body is a globe design. Seats and trim are of an erosion resistant material. The design allows for removal and replacement of seats and other wearing parts.

The feedwater control valves (MFCVs) automatically maintain the water level in the steam generators during operational modes. Positioning of the main feedwater control valve during normal operation is the function of an automatic feedwater level control system using a refinement of a standard three element control scheme. The three-element control system maintains feedwater flow equal to the steam flow, and steam generator water level is used as an input to trim feedwater flow and maintain programmed water level. Refinements on the standard control are made by varying the flow demand of the valve based on the actual stem position.

In the event of a secondary side pipe rupture inside the containment, the main feedwater control valves provide a redundant isolation to the MFIVs to limit the quantity of high energy fluid that enters the containment through the broken loop. For emergency closure of the MFCV, a solenoid is deenergized to close the valve in sufficient time to limit the mass and energy release to containment consistent with the containment analysis presented in Chapter 6.

Feedwater Check Valves

Each main feedwater line includes a check valve installed outside containment. During normal and upset conditions, the check valve prevents reverse flow from the steam generator whenever the feedwater pumps are tripped. In addition, the closure of the valves prevents more than one steam generator from blowing down in the event of feedwater pipe rupture. The check valve is designed to limit blowdown from the steam generator and to prevent slam resulting in potentially severe pressure surges due to water hammer. The valves are designed to withstand the closure forces encountered during the normal, upset and faulted conditions. Rapid closure associated with a feedline rupture does not impose unacceptable loads on the steam generator or the steam

generator system. The closure of the valves provides for isolation of the steam generators in the event of a feedwater line break to prevent blowdown from both steam generators. The valves are seismic Category I, ASME Code, Section III, Class 2 valves.

Plant Main Condenser

For a description of main condenser, refer to subsection 10.4.1.

Condensate Pumps

The three 50-percent, vertical, multistage, centrifugal condensate pumps are motor-driven and operate in parallel. Valving allows individual pumps to be removed from service. Pump capacity meets normal, full-power requirements with two of the three pumps in operation.

Condensate Regulating Valves

The main condensate flow to the deaerator is regulated by two parallel, split-ranged, pneumatically operated control valves. Condensate is regulated to maintain the level in the deaerator storage tank. During startup and low loads, the smaller valve modulates to control flow while the larger valve remains closed. As load increases, the larger valve modulates to control flow.

Low-Pressure Feedwater Heaters

These heaters are shell and tube heat exchangers with the heated condensate flowing through the tube side and the extraction steam condensing on the shell side. Parallel strings of low-pressure feedwater heaters No. 1 and 2 are located in each of three condenser necks. Feedwater heaters No. 3 and 4 are also parallel strings of heaters. The closed low-pressure feedwater heaters use drain coolers. The cascaded drains from the heaters are dumped to their respective condenser shell.

A drain line from the heater allows direct discharge of the heater drains to the condenser in the event the normal drain path is not available or flooding occurs in the heater.

The low-pressure feedwater heater shells are carbon steel, and the tubes are stainless steel.

Deaerator

The deaerator is a tray type, horizontal shell, direct contact heater with a horizontal storage tank. Condensate enters the deaerator from the top. The heating steam flows upward and is condensed, and raises the temperature of the condensate to near saturation, liberating dissolved gases from the condensate. Condensate drains from the deaerator into the storage tank. Noncondensables are vented from the top of the deaerator and flow through an orifice and valve assembly to the main condenser.

Auxiliary steam from the auxiliary steam supply system (see subsection 10.4.10) is supplied to the deaerator during recirculation conditions and maintains the pressure in the tank above atmospheric. The steam heats the condensate during cleanup and recirculation for liberation of

noncondensables. Auxiliary steam is also automatically supplied to the deaerator following turbine trip to assist in maintaining deaerator pressure above atmospheric.

The shell of the deaerator storage tank is carbon steel. Most of the internals of the deaerator, including the tray assemblies, vent condenser, and spray valves, are stainless steel.

A high level dump line and control valve provide overflow protection to the deaerator storage tank. During high level conditions, water from the deaerator storage tank is drained to the main condenser.

High-Pressure Feedwater Heaters

The main feedwater pumps discharge into a parallel string of No. 6 and No. 7 high-pressure feedwater heaters. These heaters are shell and tube heat exchangers. Heated feedwater flows through the tubes and extraction steam condenses in the shell. The No. 6 and No. 7 heaters drain into low-pressure heater No. 5 (deaerator).

A drain line from each heater allows direct discharge of the heater drains to the condenser in the event the normal drain path is not available or flooding occurs in the heater.

The high-pressure feedwater heater shells are carbon steel, and the tubes are stainless steel.

Feedwater Booster Pumps

The feedwater booster pumps are horizontal, centrifugal pumps located upstream of the main feedwater pumps. Each feedwater booster pump takes suction from the deaerator storage tank and pumps forward to its associated main feedwater pump. An electric motor drives both the booster pump and the main feedwater pump. The booster pump is driven by one end of the motor shaft and the main pump is driven by the other end through a mechanical speed increaser. The booster pump, operating at a lower speed than the main feedwater pump, boosts the pressure of feedwater from the deaerator to meet the net positive suction head requirements of the main feedwater pump.

Main Feedwater Pumps

The three main feedwater pumps operate in parallel and take suction from the associated feedwater booster pumps. The combined discharge from the main feedwater pumps is supplied to the No. 6 high-pressure feedwater heater, the No. 7 high-pressure feedwater heater, and then to the steam generator system. Each main feedwater pump is a horizontal, centrifugal pump driven, through a mechanical speed increaser, by the motor that drives the associated feedwater booster pump.

Isolation valves allow each of the booster/main feedwater pumps to be individually removed from service while continuing power operations at reduced capacity.

Pump Recirculation Systems

Minimum flow control systems automatically protect the pumps in the condensate and feedwater system from pumping below the minimum flow rate to prevent pump damage. The condensate

pumps recirculate to the main condenser. The booster/main feedwater pumps recirculate to the deaerator storage tank.

10.4.7.2.3 System Operation

10.4.7.2.3.1 Plant Startup

During plant startup, the condensate and feedwater system operates in several different configurations. These are described in subsections 10.4.7.2.3.1.1 through 10.4.7.2.3.1.4.

10.4.7.2.3.1.1 Hotwell Recirculation

The hotwell recirculation flow path is used to recirculate flow from downstream of the gland steam condenser to the main condenser to facilitate cleanup of the condensate inventory in the main condenser hotwell. This flow path also provides a minimum flow for operation of the gland steam condenser and the condensate pumps. With a condensate pump operating, the setpoint of the recirculation valve is manually adjusted to achieve the desired flow rate for cleanup of condensate. Condensate polishing equipment is aligned and placed in service to attain the required water quality.

The hotwell recirculation valve is placed in automatic operation when minimum flow is required only for operation of the gland steam condenser and one or two condensate pumps. The recirculation valve automatically maintains the minimum flow and closes when system flow to the deaerator exceeds the required minimum. The recirculation valve remains on standby and opens, as necessary, if system flow drops below minimum.

Once the hotwell recirculation loop is placed in service and cooling is available to the gland steam condenser, sealing steam may be applied to the turbine glands. Condenser vacuum can then be drawn using condenser air removal equipment.

10.4.7.2.3.1.2 Deaerator Recirculation

The deaerator recirculation flow path is used to recirculate condensate from downstream of the deaerator storage tank to the main condenser to facilitate cleanup of condensate. Deaerator recirculation is initiated by adjusting the recirculation flow control valve from the main control room to achieve the desired flow rate. Condensate is recirculated for cleanup of water quality using the condensate polishing equipment. Auxiliary steam can be admitted to the deaerator to heat the condensate for liberation of noncondensable gases.

10.4.7.2.3.1.3 Third Stage Recirculation

The third stage of condensate/feedwater recirculation during the plant heatup cycle can begin when condensate and feedwater has been sufficiently cleaned and deaerated at the feedpump suction. Flow is initiated by adjusting the recirculation flow control valve from the main control room to achieve the desired flow rate. Feedwater is recirculated from downstream of the No. 7 feedwater heaters to the main condenser for cleanup and deaeration of the condensate and feedwater inventory.

10.4.7.2.3.1.4 Plant Heatup

The condenser hotwell makeup and overflow valves are enabled and function automatically during the plant heatup cycle to maintain condensate inventory. Condensate is returned to the condensate storage tank as volume expansion occurs, and makeup occurs as needed for system losses.

During heatup, the main condenser is available to accept turbine bypass steam from the main steam system, as well as various drains, vents, and condensate/feedwater recirculation flow. Noncondensable gases are removed in the air removal sections of the main condenser and through the deaerator vents. Control and monitoring of water quality and chemistry are accomplished by operation of the condensate polishing equipment, chemical feed system, and secondary sampling equipment as required.

The steam generators are filled, as required, either by the startup feedwater pumps using water from the condensate storage tank, or alternatively by a booster/main feedwater pump using water from the deaerator storage tank and supplied through cross connect piping to the startup feedwater control valves. The steam generators are drained, as required, through the steam generator blowdown system.

During the initial stages of plant heatup, one condensate pump operates as necessary to maintain level in the deaerator storage tank. Either one or both startup feedwater pumps, or one booster/main feedwater pump, is in operation when feeding water to the steam generators. The feedwater pumps in use operate on minimum flow recirculation as necessary while maintaining the water level of the steam generators.

Feedwater is controlled by the startup feedwater control valves (SFCVs) which are operated either manually from the control room or automatically in accordance with steam generator level demand. Condensate flow to the steam generator blowdown heat exchangers is controlled during plant heatup to obtain the necessary cooling to the blowdown stream. Any excess level in the deaerator storage tank is drained to the main condenser through the deaerator high level dump flow path.

10.4.7.2.3.2 Power Operation

One operating condensate pump supplies sufficient condensate flow to the deaerator during initial power operation and at low-power levels. As power escalates, a second condensate pump is started prior to exceeding approximately 50-percent, full-load condensate flow. The third condensate pump is in standby.

The condensate regulating valves to the deaerator automatically maintain the level of the deaerator storage tank. If condensate flow to the deaerator drops below the minimum required flow for operation of the gland steam condenser or the condensate pumps, the hotwell recirculation valve to the condenser opens to provide the minimum flow.

Noncondensables are removed by the deaerating section of the main condenser and by the deaerator. Condensate polishing, chemical feed and condensate sampling are performed, as needed, to maintain water quality.

For normal operating conditions between 0- and 100-percent load, system operation is primarily automatic. Automatic level control systems control the water levels in the feedwater heaters and the condenser hotwell. Feedwater heater water levels are controlled by modulating flow control valves. Level control valves in the makeup line to the condenser from the condensate storage tank and in the return line to the condensate storage tank control the level in the condenser hotwell.

During reactor startup and at very low power levels, feedwater is supplied to the steam generators through the startup feedwater control valves using either the startup feedwater pumps drawing from the condensate storage tank, or a booster/main feedwater pump drawing from the deaerator storage tank. Refer to subsection 10.4.9 for a description of the startup feedwater system. If the startup feedwater pumps are initially in use, transfer is made to a booster/main feedwater pump prior to exceeding the capacity limit of the startup pumps. As power increases, startup feedwater continues to be supplied through the startup feedwater control valves until control of feedwater is automatically transferred from the startup feedwater control valves to the main feedwater control valves. The startup feedwater control valves close, and the main feedwater control valves open to supply main feedwater to the steam generators and maintain steam generator level. Position indication is available in the main control room for the main and startup feedwater control valves. As power escalates, booster/main feedwater pump minimum flow recirculation automatically decreases as the forward flow to the steam generators increases. The second and third booster/main feedwater pumps are brought into operation as required.

Condensate flow to the steam generator blowdown heat exchangers is normally automatically controlled. In the automatic mode, condensate flow is regulated to control the steam generator blowdown outlet temperature from the blowdown heat exchangers.

Ten-percent step load and 5-percent/minute ramp changes are accommodated without major effect to the condensate and feedwater system. The system is capable of providing the necessary feedwater flow to the steam generators with the steam pressure increase resulting from a 100-percent load rejection.

10.4.7.2.3.3 Plant Shutdown

Operation during power descent is largely the reverse of power ascent. As power is decreased, one of the two operating condensate pumps may be stopped; one or two booster/main feedwater pumps may be stopped as well. At low feedwater flow, control of feedwater is automatically transferred from the main feedwater control valves to the startup feedwater control valves.

Following reactor trip or other reactor shutdown, feedwater is supplied through the startup feedwater control valves to maintain steam generator inventories. Decay heat and sensible heat are removed by steam release via the steam dump system to the condenser to cool the plant and bring it to safe shutdown. During this time, startup feedwater is supplied either by an operating booster/main feedwater pump drawing from the deaerator storage tank, or by the startup feedwater pumps drawing from the condensate storage tank.

10.4.7.2.3.4 Emergency Operation

In the event of a design basis event (with or without normal ac power supplies available), feedwater isolation signals are generated as required. The MFIVs and MFCVs automatically close on receipt of the isolation signals. The condensate and feedwater system is not required to supply feedwater under accident conditions to effect plant shutdown or to mitigate the consequences of an accident. However, the startup feedwater system is expected to be available as a nonsafety-related system to provide a source of feedwater for the steam generators. Also, the condenser may be available to accept turbine bypass steam for secondary side heat removal. Coordinated operation of the startup feedwater system (Refer to subsection 10.4.9), if available, and the main steam supply system (Refer to Section 10.3) removes the primary loop sensible heat and reactor decay heat.

10.4.7.3 Safety Evaluation

- The safety-related portions of the main feedwater system are located in the containment and auxiliary buildings. These buildings are designed to withstand the effects of earthquakes, tornadoes, hurricanes, floods, external missiles, and other natural phenomena. Sections 3.3, 3.4, 3.5, 3.7, and 3.8 provide the bases for the adequacy of the structural design of these buildings.

- The safety-related portions of the main feedwater system are designed to remain functional after a design basis earthquake. Subsection 3.7.2 and Section 3.9 provide the design loading conditions that are considered. Sections 3.5, 3.6, and subsection 9.5.1 describe the analyses to provide confidence that a safe shutdown, as outlined in Section 7.4, is achieved and maintained.

- The main feedwater system safety-related functions are accomplished by redundant means. A single, active component failure of the safety-related portion of the system does not compromise the safety function of the system. Table 10.4.7-1 provides a failure analysis of the safety-related active components of the feedwater system. Power is supplied from onsite power systems, as described in Chapter 8.

- Preoperational testing of the safety-related portion of the condensate and feedwater system is performed as described in Chapter 14. Periodic inservice functional testing is done in accordance with subsection 10.4.7.4. Section 6.6 provides the ASME Code, Section XI requirements that are appropriate for the feedwater system.

- Section 3.2 delineates the quality group classification and seismic category applicable to the safety-related portion of this system and supporting systems. The controls and power supplies necessary for the safety-related functions of the condensate and feedwater system are Class 1E, and are described in Chapters 7 and 8.

- For a main feedwater line break inside the containment or a main steam line break, the MFIVs and the main feedwater control valves automatically close upon receipt of a feedwater isolation signal. The signals that produce a main feedwater isolation signal are identified and discussed in subsection 7.3.1.2.6.

- The MFIVs are provided with solenoids supplied by redundant power divisions. Failure of either of the power divisions or solenoids does not prevent closure of the MFIV. Releases of radioactivity from the condensate and feedwater system, resulting from the main feedwater line break, are minimal because of the negligible amount of radioactivity in the system under normal operating conditions. Following a steam generator tube rupture, the main steam isolation system and the passive residual heat removal heat exchanger reduce accidental releases, as discussed in Section 10.3 and Chapter 15. Detection of radioactive leakage into and out of the system is facilitated by area radiation monitoring (described in subsection 12.3.4), process radiation monitoring (described in Section 11.5), and steam generator blowdown sampling (described in subsection 10.4.8).

- For a steam generator tube rupture event, positive and redundant isolation is provided for the main feedwater (MFIV and MFCV) with isolation signals generated by the protection and safety monitoring system (PMS). Refer to subsection 7.3.1.2.6.

- Prevention and mitigation of feedline-related water hammer is accomplished through operation of the feedwater delivery system as described in subsection 5.4.2.2. The feedwater piping at the steam generators is sloped so that it does not drain into the steam generators. These features help avoid the formation of a steam pocket in the feedwater piping which, when collapsed, could create a hydraulic instability.

10.4.7.4 Tests and Inspections

10.4.7.4.1 Preoperational Valve Testing

The MFIVs and feedwater control valves are checked for closing time prior to initial startup.

10.4.7.4.2 Preoperational Pipe Testing

The main feedwater lines from the steam generator to the anchor at the interface between the turbine building and the auxiliary building are classified as ASME Code, Section III, Class 2 and 3 and seismic Category I piping. The Class 2 portions of the main feedwater system piping are tested and inspected to the requirements of ASME Code, Section III, Class 2 piping. The portion of the piping between the containment penetration and the anchor, which is considered as the break exclusion zone described in subsection 3.6.2, is subjected to 100-percent volumetric inspection at installation.

10.4.7.4.3 Preoperational System Testing

Preoperational testing of the condensate and feedwater system is performed as described in Chapter 14. Tests described in subsection 14.2.9.1.7, under item c) of General Test Method and Acceptance Criteria satisfy BTP (AS) 10-2. Additional testing of the feedwater system is conducted during startup testing as described in subsection 14.2.10.4.18.

10.4.7.4.4 Inservice Inspections

The performance, and structural and leaktight integrity of the condensate and feedwater system components are demonstrated by continuous operation.

Additional description of inservice testing and inspection for the MFIV and MFCV is presented in subsection 3.9.6 and Section 6.6.

10.4.7.5 Instrumentation Applications

The condensate and feedwater instrumentation, is designed to facilitate automatic operation, remote control, and indication of system parameters.

Positioning of the main feedwater control valve during normal operation is the function of an automatic feedwater level control system using a refinement of a standard three element control scheme. For each steam generator, the three-element control system maintains feedwater flow equal to the steam flow, and steam generator water level is used as an input to trim feedwater flow and maintain programmed water level. Refinements on the standard control are made by varying the valve flow demand based on actual stem position (accounting for varying C_v versus lift) dynamic line losses and feedwater temperature. A flow venturi is located in each feedwater line to provide signals for the three element feedwater control system. Feedwater control is further described in subsection 7.7.1.8.

The main feedwater pumps are tripped by manual actuation or feedwater isolation described in Section 7.3. A flow element in the discharge piping from each main feedwater pump provides a flow signal for control of the associated minimum flow recirculation valve.

Level transmitters, located at the deaerator storage tank, control deaerator level. Condensate flow to the deaerator is regulated by two split ranged control valves upstream of the deaerator. During normal power generation, the valves are regulated by a three element control system; total feedwater flow is used as a feed forward demand signal, and the control is trimmed by measured feedback of total condensate flow and deaerator storage tank level.

In the event a feedwater heater experiences a sizable tube leak or a feedwater heater water level control valve fails closed, the main turbine is protected from failure resulting from flooding on the shell side of a feedwater heater and subsequent water induction into the moving turbine blades. This is accomplished by automatic closure of the isolation valve in the steam extraction line to that heater and opening the high-level dump control valve that dumps the heater excess drains to the condenser. For heaters that do not have extraction line isolation valves, condensate isolation valves are automatically closed to isolate condensate flow to the heater tubes.

The total water volume in the condensate and feedwater system is maintained through automatic makeup and rejection of condensate to the condensate storage tank. The system makeup and rejection are controlled by the condenser hotwell level controller. Level transmitters are provided at the condenser hotwell for use by the hotwell level controller. The system water quality requirements are automatically maintained through the injection of an oxygen scavenging agent and a pH control agent into the condensate system. The pH control agent and oxygen scavenging agent injection is controlled by pH and the level of oxygen scavenging agent residual in the system which are continuously monitored by the secondary sampling system.

Instrumentation, including pressure indication, flow indication, and temperature indication, required for monitoring the system, is provided in the control room.

10.4.8 Steam Generator Blowdown System

The steam generator blowdown system (BDS) assists in maintaining acceptable secondary coolant water chemistry during normal operation and during anticipated operational occurrences of main condenser inleakage or primary to secondary steam generator tube leakage. It does this by removing impurities which are concentrated in the steam generator. The steam generator blowdown system accepts water from each steam generator and processes the water as required.

10.4.8.1 Design Basis

10.4.8.1.1 Safety-Related Design Basis

The safety-related portion of each blowdown line is part of the steam generator system (SGS). Effects of a blowdown system line break are discussed in Section 3.6. The safety-related design bases are as follows:

- The system is provided with two isolation valves on each steam generator. These valves isolate the secondary side of the steam generators to preserve the steam generator inventory. This action provides a heat sink for a safe shutdown or design basis accident mitigation. It also provides isolation of nonsafety-related portions of the system.

- The steam generator blowdown system safety-related functions can be performed assuming a single, active component failure coincident with the loss-of-offsite or onsite power.

- Piping and valves from the steam generator up to and including the containment isolation valve, the first valve on the outboard side of the containment, are designed to ASME Code, Section III, Class 2, and seismic Category I requirements. The blowdown system piping and valves from the outlet of the containment isolation valve up to and including pipe anchors located at the auxiliary building wall are designed in accordance with ASME Code, Section III, Class 3, and seismic Category I requirements.

- The safety-related portion of the system is designed to withstand the effects of a safe shutdown earthquake. The safety-related portion of the system is protected from the effects of natural phenomena and is capable of performing its intended function following postulated events such as fire, internal missile, and pipe break.

- The safety-related portion of the system is designed so that a single, active failure in the blowdown system will not result in:

  – Loss-of-coolant accident
  – Loss of integrity of steam lines
  – Loss of the capability to effect a safe reactor shutdown
  – Transmission of excessive loading to the containment pressure boundary.

- The portion of the steam generator system that is constructed in accordance with ASME Code, Section III, Class 2 and 3, requirements is provided with access to welds and

removable insulation, as required for inservice inspection in accordance with ASME Code, Section XI. (See subsection 10.4.8.4.)

- The safety-related portion of the blowdown system is designed to function in the normal and accident environments identified in subsection 3.11.1.
- The safety-related portion of the blowdown system is designed as described in Section 3.6 with regard to high-energy pipe break location and evaluation.

10.4.8.1.2 Power Generation Design Basis

The steam generator blowdown system draws secondary water from each steam generator via the blowdown line and processes this water as required to:

- Assist in controlling steam generator secondary side water chemistry during normal plant operation
- Cool down the steam generator for inspection and maintenance purposes
- Establish and maintain steam generator wet layup conditions during plant shutdown periods
- Drain the secondary side of the steam generators for maintenance

10.4.8.2 System Description

10.4.8.2.1 General Description

Figures 10.4.8-1 and 10.3.2-1 illustrate the steam generator blowdown system piping and instrumentation design. Classification of equipment and components for the steam generator blowdown system is given in Section 3.2. The system consists of two blowdown trains, one for each steam generator. A crosstie is provided to process blowdown from both steam generators through both heat exchangers during high capacity blowdown from one steam generator.

The blowdown water is extracted from each steam generator from a location just above the tube sheet. The blowdown from each steam generator is cooled by a regenerative heat exchanger, and flow is controlled and pressure reduced by blowdown flow control valves. To recover the thermal energy, the condensate system provides cooling for the heat exchangers. To recover the blowdown fluid, each blowdown train has an electrodeionization (EDI) demineralizing unit which removes impurities from the blowdown flow. Downstream of the electrodeionization units, both trains combine into a common header that contains a relief valve for providing overpressure protection for the low-pressure portion of the system. A back-pressure control valve maintains pressure in the system between the flow control valve and the back-pressure control valve.

A pump is provided to drain the secondary side of the steam generator. The pump is also used for recirculation during low-pressure steam generator wet layup and cooling operations.

System isolation from the steam generator under normal operating and transient conditions is accomplished by the two isolation valves located in the auxiliary building. The valves close on

actuation of the passive residual heat removal system, containment isolation, or high blowdown system radiation, temperature, or pressure.

10.4.8.2.2 System Operation

The various modes of operation are described in the following subsections.

10.4.8.2.2.1 Plant Startup

While low-pressure conditions exist in the steam generator, the blowdown flow control valves are bypassed, and the steam generator recirculation/drain pump is used to discharge the blowdown flow to the condensate system (CDS) for processing and recovery.

As the steam generator pressure increases, the blowdown rate is limited to about 200 gpm or less by first tripping and then isolating the recirculation pump. When the steam generator pressure reaches approximately 125 psig, the blowdown flow control valves are throttled to control the blowdown rate. When the desired operational blowdown rate is achieved, the valves are placed in automatic operation. The condensate control valves, which control the supply of cooling water to the heat exchangers, are adjusted during startup. When the condensate outlet temperature increases to a preset level, the condensate control valves are placed in automatic operation. The cooling water flow to the heat exchangers controls blowdown water to a temperature that is acceptable to the blowdown system electrodeionization units.

10.4.8.2.2.2 Normal Operation

The effectiveness of the blowdown system in controlling water chemistry depends upon the blowdown rate. The normal blowdown flowrate varies from a minimum of about 0.06 percent to a maximum of about 0.6 percent of maximum steaming rate. During normal operation, when the impurities are low, the expected blowdown rate is approximately 0.1 percent of maximum steaming rate (about 30 gpm total, or 15 gpm per steam generator), which maximizes the detection sensitivity for condenser tube leakage. The blowdown flow is cooled by the heat exchanger, and the pressure is reduced by the flow control valves. The blowdown fluid is processed through the electrodeionization units and discharged to the condensate system (condenser hotwell) for reuse.

In the event of main condenser tube leakage, when the concentration of impurities is high, the blowdown rate is increased to a maximum of approximately 0.6 percent of the maximum steaming rate (about 186 gpm total, or 93 gpm per steam generator at standard conditions). Normal operation is to recover the blowdown flow through the condensate system. However, blowdown with high levels of impurities can be discharged to the waste water system.

The back-pressure control valve is preset to a pressure which prevents flashing of the blowdown fluid in the electrodeionization units.

The blowdown flow and the electrodeionization waste stream (brine) flow are both continuously monitored for radioactivity from steam generator primary to secondary tube leakage. If such radioactivity is detected, the liquid radwaste system (WLS) is aligned to process the blowdown and electrodeionization waste effluent. If radioactivity reaches a preset high level, the blowdown flow control valves and the isolation valves automatically close.

The system operates normally under automatic control, except for flow control adjustments or flow path changes.

10.4.8.2.2.3 Steam Generator Cooling

The blowdown system can be operated to cool the steam generator for inspection and maintenance when the steam generator pressure is less than 125 psig. The blowdown is recirculated to the steam generators by the steam generator recirculation/drain pump, bypassing the blowdown flow control valves, and the electrodeionization units. The steam generator recirculation/drain pump is aligned by opening manual valves upstream and downstream of the pump. The pump recirculates the steam generator water through the heat exchangers at a total flowrate of approximately 200 gpm (100 gpm per steam generator at standard conditions). The condensate control valves are manually controlled to provide the cooling for the heat exchangers.

10.4.8.2.2.4 Steam Generator Wet Layup

The system can be operated to establish and maintain wet layup conditions in the steam generators during plant shutdown periods. During wet layup operation, water is circulated through the steam generators in the same manner as for steam generator cooling, except that the heat exchangers are not required. To maintain the correct pH and oxygen concentration in the secondary water, chemicals are added to the recirculation flow via the turbine island chemical feed system (CFS). (See subsection 10.4.11 for chemical feed system details.)

10.4.8.2.2.5 Steam Generator Drain

The steam generator blowdown system can be operated to drain the steam generator using the recirculation/drain pump and bypassing the flow control valves and the electrodeionization units. Total drain flowrate is approximately 200 gpm at standard conditions. During this mode of operation, the blowdown discharge maybe sent to the waste water system, the liquid radwaste system or the condensate system.

10.4.8.2.2.6 Steam Generator Tube Sheet Flush

The system can be operated for a short time at a total flowrate of approximately 1.85 percent of the maximum steaming rate (about 280 gpm) from one steam generator. To accommodate the high flow, the blowdown from one steam generator is isolated and the flow from the other steam generator is routed through both heat exchanger trains at a rate of approximately 140 gpm per train. The blowdown flow control valves and the blowdown electrodeionization units are bypassed during this operation. The blowdown flow is controlled by throttling the flow control valve bypass isolation valves which are in series with a flow restricting orifice. The blowdown is discharged to the waste water system (WWS).

10.4.8.2.2.7 Emergency Operation

Blowdown system isolation is actuated on low steam generator water levels. The isolation of steam generator blowdown provides for a continued availability of the steam generator as a heat sink for decay heat removal in conjunction with operation of the passive residual heat removal system and the startup feedwater system.

10.4.8.2.3 Component Description

A description of the major steam generator blowdown system components is provided in this subsection.

10.4.8.2.3.1 Blowdown Regenerative Heat Exchangers

Two regenerative heat exchangers are provided, one for each steam generator blowdown train. The heat exchangers are located in the turbine building at the base slab elevation.

10.4.8.2.3.2 Blowdown Flow Control Valves

Two blowdown flow control valves are provided, one for each steam generator blowdown train. The control valves are capable of controlling the flow and pressure over the range of normal operating conditions.

10.4.8.2.3.3 Recirculation/Drain Pump

One centrifugal pump is provided for use during operating modes when steam generator pressure is low.

10.4.8.2.3.4 Pressure Control Valve

A backpressure control valve is provided to maintain appropriate system backpressure, within the operating range of blowdown flows, and prevent flashing within the low pressure section of the system when the blowdown is discharged to the condenser hotwell.

10.4.8.2.3.5 Blowdown Isolation Valves

Two valves in series, located outside containment in the auxiliary building, are provided to automatically isolate the blowdown system in the event of abnormal conditions within the blowdown system, the reactor coolant system, or the main steam system. The valves are air-operated globe valves that fail close on loss of air or actuating power. See Section 7.3 for a description of the automatic control functions on the valves.

The first isolation valve provides a containment isolation function in addition to redundant isolation of the blowdown system. The valves close on an engineered safeguards actuation signal and provide containment integrity in conjunction with the steam generator and blowdown line inside containment. The valves are active, ASME Code, Section III, Safety Class 2, seismic Category I.

The isolation valves provide for redundant isolation of the blowdown system upon actuation of the passive residual heat removal system, low (narrow range) steam generator level, or abnormal conditions in the blowdown system. Each isolation valve receives an actuation signal from the protection and safety monitoring system (PMS) upon passive residual heat removal actuation to preserve steam generator inventory. The valves also close upon receiving a low (narrow range) water level signal to preserve steam generator inventory. Additionally, the valves receive a high radiation signal, high temperature signal, and high pressure signal, indicating abnormal conditions

in the blowdown system and actuating automatic isolation of the system. The second isolation valves are active, ASME Code, Section III, Safety Class 3, seismic Category I.

The valves are located outside containment within the auxiliary building and are attached to seismic Category I piping.

10.4.8.2.3.6 Electrodeionization Unit

Two trains of electrodeionization demineralizing units are provided for the steam generator blowdown system electrodeionization. The electrodeionization unit in each train is configured in a stack arrangement. The stack normally contains numerous pairs of stacked membranes. One cell pair consists of an ion-diluting flow (product) channel located between a cation and an anion membrane with an ion concentrating (brine) flow channel located alternately between the cell pairs. A dc potential is maintained across the electrode plates which are located on opposite ends of the stacked membranes. Ion exchange resin is contained within the product flow channel, acting as an ion selective media in the electrodeionization process. Isolation valves are provided for each stack to allow for maintenance of a stack.

A filter, upstream of the electrodeionization stack in each train, removes suspended solids and particulate matter from electrodeionization influent. Electrodeionization effluent flows through a resin trap which collects resin fines and small particulates which pass through the unit.

Each electrodeionization unit includes one centrifugal brine pump which maintains a constant flow in the closed loop brine system and flushes ionic impurities from the brine channels in the stack. A small percentage of blowdown in the brine process is used to control impurity concentration. This electrodeionization brine blowdown waste stream is directed to the waste water system (WWS) or the liquid radwaste system (WLS).

The electrodeionization stacks are located in the turbine building and in a shielded area. The area has no drain. Anionic and cationic resins are contained within the electrodeionization stacks. These resins are not consumed or exhausted in the electrodeionization process. Radiation monitors associated with the steam generator blowdown system, steam generator system (main steam), and the condenser air removal system provides the means to determine if the secondary side is radioactively contaminated.

The electrodeionization units are self-cleaning. Even after processing radioactive blowdown they will not contaminate succeeding treatment of nonradioactive blowdown.

After prolonged use, the electrodeionization units will be replaced. If they are not radioactively contaminated, they require no special packaging and may be disposed as clean solid waste. If they are radioactively contaminated, they will be dewatered, the nozzles blocked and packaged for transport according to DOT regulations. Packaged electrodeionization units may be stored in the Radwaste Building.

10.4.8.2.4 Instrumentation Applications

Flow, pressure, temperature, and radioactivity indicators with alarms monitor system operation. If pressure, temperature, or radioactivity reach a high level setpoint, an alarm is annunciated and the blowdown flow control valves and upstream isolation valves are automatically closed.

Flow elements and transmitters measure and control blowdown flow from the steam generators. The flow elements are located downstream of the blowdown flow control valves.

Temperature instrumentation monitors the temperature of blowdown fluid upstream and downstream of each heat exchanger. The heat exchanger outlet temperature controls heat exchanger cooling water flow as well as the blowdown flow to limit high temperature blowdown fluid to the electrodeionization unit.

Radioactivity detection instrumentation detects and monitors the presence of radioactivity in the combined blowdown stream from both trains. A radiation element is located in the common header upstream of the recovered blowdown three-way valve. This three-way valve normally directs the recovered blowdown flow to the condenser. When recovery of the blowdown fluid is not possible, the flow is diverted to the waste water system. Upon detection of significant levels of radioactivity via a radiation transmitter alarm, the steam generator blowdown flow is diverted to the liquid radwaste system for processing. A second radioactive detection instrument is located on the waste stream of the electrodeionization blowdown. Similarly, a three-way valve normally directs this electrodeionization brine blowdown to the waste water system. With detection of significant levels of radioactivity, the brine blowdown is diverted to the liquid radwaste system.

10.4.8.3 Safety Evaluation

- Each blowdown line is provided with redundant safety-related valves that isolate the secondary side of the steam generator to preserve the steam generator inventory. The inventory is maintained as a heat sink for sensible and decay heat removal from the reactor coolant system.

- The steam generator blowdown system safety-related functions are accomplished by redundant means. A single, active component failure within the safety-related portion of the system does not compromise the safety-related function of the system. Power is supplied by the Class 1E dc power system as described in Chapter 8.

- Section 3.2 delineates the quality group classification. The controls and power supplies necessary for safety-related functions of the steam generator blowdown system are Class 1E, and are described in Chapters 7 and 8.

- The safety-related portion of the steam generator blowdown system are located in the containment and auxiliary buildings. These buildings and areas are designed to withstand the effects of earthquakes, tornadoes, hurricanes, floods, external missiles, and other natural phenomena. Sections 3.3, 3.4, 3.5, 3.7, and 3.8 provide the bases for the adequacy of the structural design of these buildings and areas. The safety-related portions of the steam

generator blowdown system are designed to remain functional after a safe shutdown earthquake. Sections 3.7 and 3.9 provide the design loading conditions that are considered.

- No single failure coincident with loss of offsite power compromises the safety-related functions of the system or will result in:

  – Loss-of-coolant accident
  – Loss of integrity of steam lines
  – Loss of the capability to effect a safe reactor shutdown
  – Transmission of excessive loading to the containment pressure boundary.

  Component or functional redundancy is provided so that safety-related functions can be performed, assuming a single, active failure coincident with loss of ac power.

- The steam generator blowdown system is initially tested in accordance with the program described in Chapter 14. Periodic inservice functional testing is done in accordance with subsection 10.4.8.4. Section 6.6 provides the ASME Code, Section XI requirements that are appropriate for the safety-related portions of the steam generator blowdown system.

- The safety-related components of the steam generator blowdown system are qualified to function in normal, test, and accident environmental conditions. The environmental qualification program is provided in Section 3.11.

- Discussions of high energy pipe break locations and evaluation of effects are provided in subsections 3.6.1 and 3.6.2.

- Subsection 6.2.3 delineates the criteria and compliance with applicable requirements and the criteria for the containment isolation provisions.

- The failure modes and effects analysis for the steam generator blowdown system is provided in Table 10.3.3-1.

10.4.8.4 Inspection and Testing Requirements

10.4.8.4.1 Preservice Testing/Inspection

The blowdown system components are tested and inspected during plant startup as a part of the preservice test program as discussed in Chapter 14. The steam generator blowdown system's safety-related functions are designed to include the capability for testing. This includes operation of applicable portions of the protection system. The safety-related components of the system (valves and piping,) are designed and located to permit preservice and inservice inspections to the extent practical.

The steam generator blowdown lines within the containment and the auxiliary building are visually and volumetrically inspected at installation as required by ASME Code, Section XI preservice inspection requirements.

10.4.8.4.2 Inservice Testing/Inspection

The performance and structural leaktight integrity of system components are demonstrated by normal operation.

Additional discussion of inservice inspection of the blowdown containment isolation valves is contained in Section 6.6 and subsection 3.9.6.

Instruments and controls are calibrated during startup and recalibrated, as necessary, to maintain system operation within its design specifications.

10.4.9 Startup Feedwater System

The startup feedwater system supplies feedwater to the steam generators during plant startup, hot standby and shutdown conditions, and during transients in the event of main feedwater system unavailability. The startup feedwater system is composed of components from the AP1000 main and startup feedwater system (FWS) and steam generator system (SGS).

10.4.9.1 Design Basis

10.4.9.1.1 Safety Design Basis

The safety functions of the startup feedwater system are to provide for containment isolation, steam generator isolation and feedwater isolation following design basis events requiring these actions. Containment isolation is provided to limit radioactive releases to the environment following design basis events that result in the releases of radioactivity to the containment. Steam generator isolation is provided to limit rapid blowdown to a single steam generator following a feedwater or steamline break. Feedwater isolation limits excessive feedwater flow to the steam generators to limit mass and energy releases to containment to limit excessive RCS cooldown and to limit steam generator overfill.

The portion of the startup feedwater system from the steam generator inlets outward through the containment up to and including the startup feedwater isolation valves (SFIVs) is constructed in accordance with the requirements of ASME Code, Section III for Class 2 components and is designed to seismic Category I requirements. The portion of the startup feedwater system from the startup feedwater isolation valve inlets to the piping restraints at the interface between the auxiliary building and the turbine building is constructed in accordance with the requirements of ASME Code, Section III for Class 3 components and is designed to seismic Category I requirements.

The startup feedwater system provides redundant isolation valves, as described below, for the startup feedwater lines routed into containment. The isolation valves close after receipt of an isolation signal in sufficient time to limit the mass and energy release to containment consistent with the containment analysis presented in Section 6.2.

- The safety-related portions of the startup feedwater system are designed to remain functional after a safe shutdown earthquake (SSE) and to perform their intended function of isolating startup feedwater flow following postulated events.

- The safety-related portions of the startup feedwater system are protected from wind and tornado effects, as described in Section 3.3; flood protection is described in Section 3.4; missile protection is described in Section 3.5; protection against dynamic effects associated with the postulated rupture of piping is described in Section 3.6; seismic protection is described in Section 3.7; environmental design is described in Section 3.11; and fire protection is described in Section 9.5.

- The portion of the startup feedwater system to be constructed in accordance with ASME Code, Section III, Class 2 requirements is provided with access to welds and removable insulation for inservice inspection, in accordance with ASME Code, Section XI. The portion of the startup feedwater system to be constructed in accordance with ASME Code, Section III, Class 3 requirements is also designed and configured to accommodate inservice inspection in accordance with ASME Code, Section XI. The startup feedwater system is designed so that the active components are capable of limited testing during plant operation.

- The startup feedwater system quality group classification codes are identified in Section 3.2. The control functions and power supply are described in Chapters 7 and 8.

- Double valve startup feedwater isolation is provided by the startup feedwater control valve and the startup feedwater isolation valve. Both valves are designed to close on a startup feedwater isolation signal, an appropriate engineered safeguards features (ESF) signal as indicated on Figure 7.2-1. The startup feedwater isolation valve also serves as a containment isolation valve. The startup feedwater control valve fails closed on loss of air. See Section 7.3. Backflow in the startup feedwater line results in closure of the startup feedwater check valve.

- For a steam generator tube rupture event, positive and redundant isolation is provided for the startup feedwater system (startup feedwater isolation signal and startup feedwater control valve), with isolation signals generated by the protection and safety monitoring system.

10.4.9.1.2 Power Generation Design Basis

- During normal plant startup, shutdown or hot standby, feedwater can be supplied through the startup feedwater control valves to the steam generators using either a booster/main feedwater pump drawing water from the deaerator storage tank (refer to subsection 10.4.7), or using the startup feedwater pumps drawing water from the condensate storage tank.

- In the event of loss of the main feedwater system, the startup feedwater pumps automatically supply feedwater to the steam generators for heat removal from the reactor coolant system. The heat removal function of the startup feedwater system is nonsafety-related. The startup feedwater system avoids the need for actuation of the safety-related passive core cooling system. Following the transient, the system refills the steam generators and supports reactor coolant system cooldown.

- One operating startup feedwater pump delivers sufficient flow to the steam generators to avoid actuation of the passive core cooling system following a reactor trip. The maximum

flow available from two operating startup feedwater pumps does not result in overcooling the reactor coolant system, overfilling the steam generators, or inputting excessive mass/energy to containment following a main steam line break.

- The startup feedwater pumps use the condensate storage tank as a water supply source. A sufficient volume of feedwater is available from the condensate storage tank (refer to subsection 9.2.4) to achieve cold shutdown, based on 8 hours of operation at hot standby conditions and subsequent cooldown of the reactor coolant system within 6 hours to conditions which permit operation of the normal residual heat removal system.

- The startup feedwater pumps are headered at the pump discharge, and a separate line runs from the header to each steam generator.

- For a main feedwater or main steam line break (MSLB) inside the containment, the startup feedwater lines provide a nonsafety-related path for the addition of feedwater to the remaining intact loop if ac power is available.

- For a main feedwater line break upstream of the main feedwater isolation valve (outside of the containment), the startup feedwater lines provide a nonsafety-related path for the addition of feedwater to maintain steam generator level if ac power is available.

- Two startup feedwater pumps are provided with a single pump capable of satisfying the startup feedwater system flow demand for decay heat removal. These pumps automatically start and maintain steam generator water level when the main feedwater system is unavailable.

- In the event of loss of normal ac power, the startup feedwater pumps and associated motor operated isolation valves are powered by the onsite standby ac power supply (diesels). Each of the two startup feedwater pumps is powered by its respective standby diesel.

- During normal plant startup, feedwater is supplied through the startup feedwater control valves to the steam generators until transition is made to the main feedwater control valves of the main feedwater system. During normal plant shutdown, feedwater is supplied through the startup feedwater control valves after transition is made from the main feedwater control valves, and until the normal residual heat removal system is placed in service.

10.4.9.2 System Description

10.4.9.2.1 General Description

The startup feedwater system is shown schematically in Figure 10.4.7-1 as part of the condensate and feedwater system piping and instrument diagram and in Figure 10.3.2-1 as part of the main steam system piping and instrument diagram. Classification of equipment and components is given in Section 3.2.

Startup feedwater is defined to be feedwater that passes through the startup feedwater control valves, and can be supplied from either of two sources. Startup feedwater can be supplied by a

booster/main feedwater pump drawing from the deaerator storage tank and delivering through cross connect piping to the startup feedwater header; or, startup feedwater can be supplied by one or both startup feedwater pumps drawing from the condensate storage tank and delivering to the startup feedwater header. The startup feedwater header is defined to be the common segment of startup feedwater piping downstream of the startup feedwater pumps. The booster/main feedwater pumps are part of the condensate and feedwater system and are described in subsection 10.4.7. As described in subsection 10.4.7.2.1, the cross connection piping between the main feedwater pump discharge header and the startup feedwater header contains a check valve and a nonsafety-related, air-operated isolation valve. The check valve prevents the startup feedwater pumps from supplying the main feedwater header, and the isolation valve automatically closes upon a main feedwater isolation signal to isolate the main feedwater system from the startup feedwater system.

Two parallel startup feedwater pumps are provided and take suction from the condensate storage tank. Each startup feedwater pump discharges to the startup feedwater header through a venturi flow element, an automatic recirculation valve, and a remotely-operated isolation valve. The venturi flow element provides a flow measurement signal at normal flow rates, and cavitates at a flow rate near pump runout to choke the flow and avoid further flow increase. The automatic recirculation valve functions as a check valve to prevent reverse flow through the pump, and also functions as a minimum flow control valve for pump protection; during conditions of low forward flow to the system, sufficient flow from the pump is automatically recirculated back to the condensate storage tank to meet pump minimum flow requirements. The discharge isolation valve is closed when the associated pump is not operating; when in standby operation, the valve automatically opens when the associated pump starts.

The startup feedwater header branches into individual lines to the two steam generators. Each individual line contains a startup feedwater control valve, a check valve, and a startup feedwater isolation valve. Startup feedwater flow in each line is controlled by the associated startup feedwater control valve to maintain level in the associated steam generator.

A startup feedwater system failure analysis for safety-related components is presented in Table 10.4.9-1.

10.4.9.2.2 Component Description

From the connections at the steam generators out through the startup feedwater isolation valves, the startup feedwater system is designed in accordance with the requirements of ASME Code, Section III for Class 2 components and seismic Category I requirements. From upstream of the startup feedwater isolation valve to the restraints at the interface between the auxiliary building and turbine building, the system is designed in accordance with ASME Code, Section III for Class 3 components and seismic Category I requirements. The remaining portion of the startup feedwater system is nonsafety-related.

Startup Feedwater Pump

Each startup feedwater pump is a multistage, centrifugal pump driven by an ac motor. Each pump can supply 100 percent of the required flow to the two steam generators to meet the decay heat removal requirements specified in subsection 10.4.9.1.2. The pumps automatically start as

described in subsection 10.4.9.2.3.4. Isolation valves at the pump suction and discharge allow each startup feedwater pump to be individually serviced. The discharge isolation valve for each pump is powered by the same train of the onsite standby ac power supply as the associated pump.

Startup Feedwater Control Valve

The startup feedwater control valves are air-operated, modulating control valves with the dual purpose of controlling startup feedwater flow rate, as well as providing isolation of the startup feedwater system. The valve body is a globe design that provides the required range of startup feed control, as well as positive isolation. The startup feedwater control valves operator is equipped with an auxiliary air accumulator to provide independent operation of the startup feedwater control valves upon loss of normal instrument air supply.

The startup feedwater control valves automatically maintain water level in the steam generators during operation of the startup feedwater system, in response to signals generated by the plant control system.

In the event of a secondary side pipe rupture inside the containment, the startup feedwater control valve provides a secondary backup to the startup feedwater isolation valve limiting the quantity of high-energy fluid that enters the containment through the broken pipe. For emergency closure of the valve, a solenoid is deenergized, resulting in valve closure in sufficient time to limit the mass and energy release to containment consistent with the containment analysis presented in Section 6.2. The electrical solenoid is energized from a Class 1E source.

Startup Feedwater Isolation Valve

One startup feedwater isolation valve is installed in each startup feedwater line outside containment and downstream of a startup feedwater control valve and a startup feedwater check valve. The following primary functions are performed by the valve:

- The startup feedwater isolation valve is provided to prevent the uncontrolled blowdown from more than one steam generator in the event of startup feedwater line rupture. The startup feedwater control valve provides backup isolation.

- The startup feedwater isolation valve and the startup feedwater control valve provide isolation of the nonsafety-related portions of the system from the safety-related portions.

- In the event of a secondary pipe rupture inside containment, the startup feedwater isolation valve and startup feedwater control valve provide isolation to limit the quantity of high energy fluid that enters the containment.

- In the event of a steam generator tube rupture, the startup feedwater isolation valve and startup feedwater control valve limit overfill of the steam generator by terminating startup feed flow.

The startup feedwater isolation valve is a remotely-operated gate valve designed in accordance with ASME Code, Section III Class 2 requirements. The valve operator is designed to stroke against steam generator pressure or startup feedwater pump shutoff head.

The startup feedwater isolation valve and startup feedwater control valve functional diagrams are shown in Figure 7.2-1. To provide the safety function actuation (closure) as well as reliable alignment, and redundant and independent actuation, the startup feedwater isolation valve and startup feedwater control valve are powered from separate Class 1E power sources.

10.4.9.2.3 System Operation

The startup feedwater system supplies the steam generators with feedwater during conditions of plant startup, hot standby and shutdown, and during transients in the event of main feedwater system unavailability. The startup feedwater system also supplies feedwater during low power operation under conditions when the startup feedwater control valves regulate the feedwater flow to the steam generators.

10.4.9.2.3.1 Startup

During reactor startup and at low power levels, feedwater is supplied to the steam generators through the startup feedwater control valves using either the startup feedwater pumps drawing from the condensate storage tank, or a booster/main feedwater pump drawing from the deaerator storage tank. Refer to subsection 10.4.7 for a description of the operation of the condensate and feedwater system and the booster/main feedwater pumps. The feedwater pumps in use operate on minimum flow recirculation as necessary while maintaining the water level of the steam generators. Feedwater is controlled by the startup feedwater control valves, which are operated either manually from the control room or automatically in accordance with steam generator level demand. If the startup feedwater pumps are initially in use, transfer is made to a booster/main feedwater pump prior to exceeding the capacity limit of the startup pumps. As power increases, feedwater continues to be supplied through the startup feedwater control valves until control of feedwater is automatically transferred from the startup feedwater control valves to the main feedwater control valves. As the main feedwater control valves open and assume responsibility for maintaining steam generator water level, the startup feedwater control valves close. Position indication is available in the main control room for the main and startup feedwater control valves.

10.4.9.2.3.2 Hot Standby

During hot standby conditions, feedwater is supplied to the steam generators through the startup feedwater control valves using either one or both startup feedwater pumps drawing from the condensate storage tank, or a booster/main feedwater pump drawing from the deaerator storage tank. The startup feedwater control valves operate to maintain the steam generator levels, and minimum flow recirculation is automatically utilized as required to protect the feedwater pumps that are in use.

10.4.9.2.3.3 Shutdown

Operation during power descent and shutdown is generally the reverse of operation during startup and power ascent. At low feedwater flows, control of feedwater is automatically transferred from

the main feedwater control valves to the startup feedwater control valves. Feedwater is supplied by an operating booster/main feedwater pump drawing from the deaerator storage tank. Feedwater can continue to be supplied by a booster/main feedwater pump during the shutdown process; alternatively, feedwater supply can be transferred to the startup feedwater pumps when flow demand has decreased to within their capacity. Feedwater continues to be supplied until the normal residual heat removal system is placed in service.

10.4.9.2.3.4 Automatic Starts

The startup feedwater pumps automatically start upon conditions resulting from insufficient main feedwater flow to the steam generators. An automatic pump start signal is generated by the plant control system (PLS). The signal is generated on low main feedwater flow coincident with low steam generator level. As a backup to this logic, it is also initiated on steam generator level alone, at a setpoint below the low steam generator level setpoint.

The amount of startup feedwater flow delivered to each steam generator is determined by the associated startup feedwater control circuit, which sends a signal to modulate the startup feedwater control valve (Figure 10.3.2-1) in response to steam generator water level control signals. The control valve is modulated as required to maintain the programmed steam generator water level setpoint.

Following a reactor trip that is not the result of a main feedwater system malfunction and in which the main feedwater system remains available, the startup feedwater pumps do not automatically start. In this case, the startup feedwater control valves take control and open to supply the steam generators using feedwater delivered from a booster/main feedwater pump through cross-connect piping. The startup feedwater pumps remain on standby for backup protection, and can be manually started if desired by the plant operator.

10.4.9.2.3.5 Emergency Operation

The startup feedwater system is not required to supply feedwater under accident conditions. However, the startup feedwater system is expected to be available as a nonsafety-related, first line of defense to provide a source of feedwater for the steam generators. Coordinated operation of the startup feedwater system (which starts automatically, as discussed in subsection 10.4.9.2.3.4), if available, and the main steam supply system (refer to Section 10.3) are employed to remove the primary loop sensible heat and reactor decay heat. A minimum condensate storage tank volume of 325,000 gallons is required for defense-in-depth purposes. The condensate storage tank size is shown in subsection 9.2.4.2.2.

10.4.9.3 Safety Evaluation

- The safety-related portions of the startup feedwater system are located in the containment and auxiliary buildings. These buildings are designed to withstand the effects of earthquakes, tornadoes, hurricanes, floods, external missiles, and other natural phenomena. Sections 3.3, 3.4, 3.5, 3.7, and 3.8 provide the bases for the adequacy of the structural design of these buildings.

- The safety-related portions of the startup feedwater system are designed to remain functional after a design basis earthquake. Subsection 3.7.2 and Section 3.9 provide the design loading conditions that are considered. Sections 3.5, 3.6, and subsection 9.5.1 provide the analyses to provide confidence that a safe shutdown, as outlined in Section 7.4, is achieved and maintained.

- The startup feedwater system safety-related functions are accomplished by redundant means. A single, active component failure of the safety-related portion of the system does not compromise the safety function of the system. Table 10.4.9-1 provides a failure analysis of the safety-related active components of the startup feedwater system. Power is supplied from onsite power systems, as described in Chapter 8.

- Preoperational testing of the safety-related portion of the condensate and feedwater system is performed as described in Chapter 14. Periodic inservice functional testing is done in accordance with subsection 10.4.9.4. Section 6.6 provides the ASME Code, Section XI requirements that are appropriate for the startup feedwater system.

- Section 3.2 delineates the quality group classification and seismic category applicable to the safety-related portion of this system and supporting systems. The controls and power supplies necessary for the safety-related functions of the startup feedwater system are Class 1E, as described in Chapters 7 and 8.

- The startup feedwater isolation valves and the startup feedwater control valves automatically close upon receipt of a feedwater isolation signal, which occurs on a steam generator high-high water level and other appropriate engineered safeguards signals as shown on the diagrams titled “Feedwater Isolation” and “Steamline Isolation” in Figure 7.2-1.

- For a steam generator tube rupture event, positive and redundant isolation is provided for the startup feedwater system (startup feedwater isolation valve and startup feedwater control valve) to prevent steam generator overfill, with engineered safeguards isolation signals generated by the protection and safety monitoring system (PMS).

10.4.9.4 Tests and Inspections

10.4.9.4.1 Preoperational Valve Testing

The startup feedwater isolation valves and startup feedwater control valves are checked for closing time prior to initial startup.

10.4.9.4.2 Preoperational Pipe Testing

The Class 2 portion of the startup feedwater system piping is tested and inspected to the requirements of ASME Code, Section III, Class 2 piping. In addition, the portion of the piping between the containment penetration and the anchor, which is traditionally considered as the break exclusion zone described in subsection 3.6.2, is subjected to 100-percent volumetric inspection at installation (that is, 100-percent volumetric examination of shop and field longitudinal and circumferential welds).

10.4.9.4.3 Preoperational System Testing

Preoperational testing of the startup feedwater system is performed as described in Chapter 14. Tests described in subsection 14.2.9.1.7, under item c) of General Test Method and Acceptance Criteria satisfy BTP (AS) 10-2. Additional testing of the startup feedwater system is conducted during startup testing as described in subsection 14.2.10.4.18.

10.4.9.4.4 Inservice Inspections

The performance and structural and leaktight integrity of the startup feedwater system components are demonstrated by normal operation.

The inservice inspection program for ASME Section III Class 2 and 3 components is described in Section 6.6. The inservice testing program, including testing for the startup feedwater isolation valve and startup feedwater control valve, is described in subsection 3.9.6.

10.4.9.5 Instrumentation Applications

The startup feedwater system instrumentation is designed to facilitate automatic operation, remote control, and continuous indication of system parameters.

The startup feedwater flow is controlled by a steam generator level demand signal modulating the startup feedwater control valve. The control valve may either be in manual or automatic control. Refer to Section 7.7. The startup feedwater flow transmitters also provide redundant indication of startup feedwater and automatic safeguards actuation input on low flow coincident with low, narrow range steam generator level. See Section 7.3.

10.4.10 Auxiliary Steam System

The auxiliary steam system (ASS) provides the steam required for plant use during startup, shutdown, and normal operation. Steam is supplied from either the auxiliary boiler or the main steam system.

10.4.10.1 Design Basis

10.4.10.1.1 Safety Design Basis

The auxiliary steam system serves no safety-related function and therefore has no nuclear safety design basis.

10.4.10.1.2 Power Generation Design Basis

The auxiliary steam system supplies steam required by the unit for a cold start of the main steam system and turbine-generator. Additionally, the auxiliary steam system provides steam for hot water heating. Main steam supplements the auxiliary steam header during startup and supplies the auxiliary steam header during normal operation. The auxiliary boiler provides steam to the header during plant shutdown.

10.4.10.2 System Description

10.4.10.2.1 General Description

The auxiliary boiler is located in the turbine building. The system consists of steam generation equipment and distribution headers.

Condensate from the condensate storage tank is chemically treated and pumped to the auxiliary boiler deaerator where oxygen and non-condensables are removed using auxiliary steam. The auxiliary boiler feedwater pumps deliver condensate from the auxiliary boiler deaerator to the auxiliary boiler. A feedwater control valve, located in the feedwater piping, regulates water level in the auxiliary boiler. Feedwater flow is proportional to auxiliary boiler steaming rate. Steam generated by the auxiliary boiler is supplied to the plant auxiliary steam distribution piping.

Boiler water quality is maintained by controlling boiler blowdown flow to an atmospheric blowdown tank and by feeding oxygen scavenging and pH control chemicals to the boiler makeup water system.

Water level in the auxiliary boiler deaerator is maintained by an automatic control valve in the condensate supply and deaerator overflow piping. Makeup water is supplied from the demineralized water transfer and storage system.

10.4.10.2.2 Component Description

Auxiliary steam system component classification is as described in Section 3.2.

Auxiliary Steam System and Boiler

The auxiliary steam boiler is an electric package boiler with a nominal net output capacity of approximately 100,000 pounds per hour of saturated steam at 195 psig. The system is protected from overpressure by safety valves located on the boiler, boiler deaerator, and auxiliary steam header.

Pumps

Two 100-percent capacity auxiliary boiler feedwater pumps are provided to feed the auxiliary steam boiler.

Two 100-percent capacity auxiliary boiler makeup pumps maintain level in the boiler deaerator.

Auxiliary Boiler Deaerator

The auxiliary boiler deaerator is a 100-percent-capacity deaerator which uses steam supplied by the auxiliary steam header. The auxiliary boiler deaerator steam blanket is controlled for preheating and deaerating boiler makeup water. The auxiliary boiler deaerator removes oxygen and non-condensables from auxiliary boiler feedwater.

Chemical Treatment Components

The auxiliary boiler makeup water is treated with pH control and oxygen scavenging chemicals. Chemical injections maintain proper water chemistry during operational conditions. Batch chemicals for cleaning and layup are injected into the auxiliary boiler and auxiliary boiler deaerator when they are not in operation. Chemical feed equipment for the auxiliary steam system is part of the turbine island chemical feed system (CFS) and is described in Section 10.4.11.

10.4.10.2.3 System Operation

When in operation, the auxiliary steam system provides the following services:

- Steam to the plant hot water heating system heat exchangers where water is heated and pumped to the heating system ventilation coils.
- Steam for the condensate system deaerator when condensate heating occurs during preoperational cleanup of the condensate and feedwater system.
- Sealing steam to the glands of the main turbine prior to the availability of main steam.
- Steam for maintaining pressure in the condensate system deaerator after a turbine trip when extraction steam is lost.
- Steam for blanketing of the MSR and feedwater heaters when main steam is not available.

Operational safety features are provided within the system for the protection of plant personnel and equipment. The auxiliary steam system does not interface directly with nuclear process systems.

10.4.10.3 Safety Evaluation

The auxiliary steam system has no safety-related function and therefore requires no nuclear safety evaluation. High energy pipe rupture analysis is not required for the auxiliary steam system since none of the lines pass through areas where safety related equipment is located.

10.4.10.4 Tests and Inspections

Testing of the auxiliary steam system is performed prior to initial plant operation.

Components of the system are monitored during operation to verify satisfactory performance.

10.4.10.5 Instrumentation Applications

A boiler control system is provided with the auxiliary boiler package for automatic control of the auxiliary boiler. Features of the control system include automatic shutdown of the auxiliary boiler on an abnormal condition.

The auxiliary steam system is provided with the necessary controls and indicators for local or remote monitoring of the operation of the system.

10.4.11 Turbine Island Chemical Feed

The turbine island chemical feed system (CFS) injects required chemicals into the condensate (CDS), feedwater (FWS), auxiliary steam (ASS), service water (SWS), and demineralized water treatment (DTS). CFS components are located in the turbine building.

10.4.11.1 Design Basis

10.4.11.1.1 Safety Design Basis

The turbine island chemical feed system serves no safety-related function and therefore has no nuclear safety design basis.

10.4.11.1.2 Power Generation Design Basis

A noncorrosive condition is maintained within the systems serviced by the turbine island chemical feed system.

The secondary sampling system (SSS), as described in subsection 9.3.4, contains sampling requirements in accordance with water chemistry specifications that are provided in Table 10.3.5-1.

10.4.11.2 System Description

Classification of equipment and components is given in Section 3.2.

10.4.11.2.1 Component Description

Condensate, Feedwater and Auxiliary Steam

An all-volatile chemical feed system (AVT) is used for condensate, feedwater and auxiliary steam water chemistry control. An oxygen scavenger is injected into the condensate system downstream of the condensate polishers to control the dissolved oxygen level. Feedwater chemistry is controlled by maintaining a residual level of oxygen scavenger. The injection point for the feedwater oxygen scavenger is located upstream of the feedwater booster pump suction. A pH adjuster is also injected into the condensate system downstream of the condensate polisher for pH control. Injection for pH control of the feedwater is located upstream of the feedwater booster pump suction. Chemical feed pumps and tanks are used to store and inject the chemicals into the piping system. Subsection 10.4.10.2.2 describes chemical feed for the auxiliary steam system.

Service Water

A biocide, pH adjuster, and dispersant/corrosion/scale inhibitor are injected into the service water system as required. An algicide can be fed to the service water cooling tower basins. Subsection 9.2.1.2.2 describes chemical feed for the service water system.

Demineralized Water Treatment

A pH adjuster and scale inhibitor are injected into the demineralized water treatment system. Subsection 9.2.3.2.3 describes chemical feed for the demineralized water treatment system.

10.4.11.2.2 System Operation

Condensate, Feedwater and Auxiliary Steam System Chemistry Control

An oxygen scavenger is injected upstream of the feedwater booster pump suction to maintain a residual level of oxygen scavenger and a dissolved oxygen level of not more than 5 ppb at the inlet to the steam generator.

A pH adjuster is also injected upstream of the feedwater booster pump suction to maintain the pH at the steam generator inlet within the control program for pH.

An oxygen scavenger is injected into the condensate system downstream of the condensate polisher to maintain a dissolved oxygen level of not more than 10 ppb at the inlet of the deaerator.

A pH adjuster is injected into the condensate system downstream of the condensate polisher to maintain the pH above 9.0 at the deaerator inlet within the control program for pH.

The chemical feed system may be used to place the steam generators in wet layup. This layup process is accomplished using the chemical feed system in conjunction with the steam generator blowdown system. Refer to subsection 10.4.8.2 for details of this process.

An oxygen scavenger and pH adjuster are injected into the auxiliary steam system downstream of the boiler makeup pumps to maintain the dissolved oxygen level and pH within the auxiliary boiler program levels. The chemical feed rates are manually adjusted.

Service Water System Chemistry Control

A biocide, pH adjuster and dispersant/corrosion/scale inhibitor are injected downstream of the service water pumps as required. Chemical feed rates for the biocide and dispersant/corrosion/scale inhibitor are manually adjusted to maintain proper concentrations. The pH adjuster chemical feed rate is controlled electronically from instrumentation that measures pH.

An algicide is provided to control algae formation on the service water cooling tower. The algicide is fed using a flexible hose and the feed rate is manually adjusted.

Demineralized Water Treatment System Chemistry Control

A pH adjuster and scale inhibitor are injected into the raw water supply to the demineralized water treatment system upstream of the cartridge filters. The scale inhibitor feed rate is manually adjusted and the pH adjuster chemical feed rate is controlled electronically from instrumentation that measures pH.

10.4.11.3 Safety Evaluation

The turbine island chemical feed system has no safety-related function and therefore requires no nuclear safety evaluation.

Toxic gases, such as chlorine, are not used in the turbine island chemical feed system. The impact of toxic material on main control room habitability is addressed in Section 6.4.

10.4.11.4 Tests and Inspections

The turbine island chemical feed system is operationally checked before initial plant startup to verify proper functioning of the feed systems and chemical sensors.

10.4.11.5 Instrumentation Applications

The secondary sampling system (SSS), as described in subsection 9.3.4, provides instrumentation which measures dissolved oxygen, oxygen scavenger residual, and pH for the condensate, feedwater, and steam generator systems. These analyzers provide an indication of water quality and inputs for either manual or automatic control of the condensate and feedwater systems oxygen scavenging and pH control chemical feed pumps. Grab samples are analyzed to provide input for manual adjustment of feed rates for the auxiliary steam system oxygen scavenging and pH control chemical feed pumps. Wet layup operations are manually performed based on the results of the grab sample analysis.

Grab samples are analyzed to provide input for manual adjustment of feed rates for biocide, pH adjustment, and/or dispersant/corrosion/scale inhibitor chemicals for service water and demineralized water treatment.

10.4.12 Combined License Information

10.4.12.1 Circulating Water System

The Combined License applicant will address the final configuration of the plant circulating water system including piping design pressure, the cooling tower or other site-specific heat sink.

As applicable, the Combined License applicant will address the acceptable Langelier or Stability Index range, the specific chemical selected for use in the CWS water chemistry control, pH adjuster, corrosion inhibiter, scale inhibiter, dispersant, algicide and biocide applications reflecting potential variations in site water chemistry and in micro macro biological lifeforms. A biocide such as sodium hypochlorite is recommended. Toxic gases such as chlorine are not recommended. The impact of toxic gases on the main control room habitability is addressed in Section 6.4. The Combined License applicant will also be responsible for the design, routing, and disposition requirements associated with the main condenser waterbox drains.

10.4.12.2 Condensate, Feedwater and Auxiliary Steam System Chemistry Control

The Combined License applicant will address the oxygen scavenging agent and pH adjuster selection for the turbine island chemical feed system.

10.4.12.3 Potable Water

The Combined License applicant will address the chemistry requirements for the source of potable water. A biocide such as sodium hypochlorite is recommended. In addition, if a municipal site-specific source is not utilized, toxic gases such as chlorine are not recommended. The impact of toxic gases on the main control room habitability is addressed in Section 6.4.

10.4.13 References

1. ASME Performance Test Code 19.11, 1970.
2. Heat Exchange Institute Performance Standard for Liquid Ring Vacuum Pumps.
3. American Water Works Association, Code 504-80, Rubber Seated Butterfly Valves.

Table 10.4.1-1

MAIN CONDENSER DESIGN DATA

Condenser Data	
Condenser type	Multipressure, Single pass
Hotwell storage capacity	3 min
Heat transfer	7,540 x 10^6 Btu/hr
Design operating pressure (average of all shells)	2.9 in.-Hg
Shell pressure (design)	0 in.-Hg absolute to 15 psig
Circulating water flow	[[600,000 gpm]]
Water box pressure (design)	90 psig
Tube-side inlet temperature	91°F
Approximate Tube-side temperature rise	25.2°F
Condenser outlet temperature	116.2°F
Waterbox material	Carbon Steel
Condenser Tube Data	
Tube material (main section)	Titanium(1)
Tube size	1″ O.D. – 23 BWG
Tube material (periphery)	Titanium(1)
Tube size	1″ O.D. – 23 BWG
Tube sheet material	Titanium or Titanium Clad Carbon Steel(2)
Support plates	Modular Design/Carbon Steel

Note:
1. For fresh water plants, an equivalent tube material such as 304L, 316L, 904L, or AL-6X may be substituted.
2. If one of the alternate tube materials is used, the tube sheet shall be carbon steel, clad with the same material as the tubes.

Table 10.4.5-1

[[DESIGN PARAMETERS FOR MAJOR CIRCULATING WATER SYSTEM COMPONENTS]]

(Conceptual Design)

Circulating Water Pump	
Quantity	Three per unit
Flow rate (gal/min)	210,367
Natural Draft Cooling Tower	
Quantity	One per unit
Approach temperature (°F)	10
Inlet temperature (°F)	114.9
Outlet temperature (°F)	91
Approximate Temperature range (°F)	25.2
Flow rate (gal/min)	631,100
Heat transfer (Btu/hr)	$7,628 \times 10^6$
Wind velocity design (mph) Seismic design criteria per Uniform Building Code	110

Table 10.4.7-1 (Sheet 1 of 2)

CONDENSATE AND FEEDWATER SYSTEM COMPONENT FAILURE ANALYSIS

Component	Failure Effect on Train	Failure Effect on System	Failure Effect on RCS
1. SGS PL V057A (MFIV)	1a. Valve fails closed or fails to open on command. Train "A" is not available for FW flow to SG "A."	FW Train "B" available. SFW Train "A" available.	None. Decay heat removal is maintained via PRHR actuation on ESF signal. SFW available to provide flow to SG "A."
	1b. Valve fails open or fails to close on command. Trains "A" and "B" are available for FW flow. Isolation function of V057A is not available. Redundant power division closure of MFIV provided for reliability; backup isolation provided by V058A and V250A.	Valve V250A (MFCV) provides backup isolation to terminate feedwater flow. Check valve V058A provides redundant feedwater blowdown isolation from SG "A;" redundant containment isolation provided by SG and feedwater line inside containment.	None. RCS integrity is maintained by valve V058A/V250A available to prevent SG "A" blowdown. Decay heat removal available via PRHR and SFW actuated by ESF signal. SG overfill protection provided by backup isolation of V250A.
2. SGS PL V057B (MFIV)	2a. Same as except for SG "B."	FW Train "A" available. SFW Train "B" available.	Same as 1a except for SG "B."
	2b. Same as 1B except isolation function of V057B is not available.	Same as 1b except for "B" train valves and SG "B."	Same as 1b except for "B" train valves and SG "B."
3. SGS PL V250A (MFCV)	3a. Valve fails closed or fails to open on command. Train "A" is not available for FW flow to SG "A."	FW Train "B" available. SFW Train "A" available.	None. Decay heat removal is maintained via PRHR actuation on ESF signal. SFW available to provide flow to SG "A."
	3b. Valve fails open or fails to close on command. Trains "A" and "B" are available for FW flow without flow control to SG "A." Backup isolation provided by V058A and V057A.	Valve V057A (MFIV) provides backup isolation to terminate feedwater flow. Check valve V058A and V057A provide redundant feedwater blowdown isolation from SG "A." SFW train "A" and "B" available for decay heat removal.	None. RCS integrity is maintained by valve V057A and V058A closure to limit SG blowdown. Decay heat removal available via PRHR and SFW actuated by ESF signal. SG overfill protection provided by redundant isolation of V057A.

Table 10.4.7-1 (Sheet 2 of 2)

CONDENSATE AND FEEDWATER SYSTEM COMPONENT FAILURE ANALYSIS

Component	Failure Effect on Train	Failure Effect on System	Failure Effect on RCS
4. SGS PL V250B (MFCV)	4a. Same as 3a, except for train “B” and SG “B.”	Same as 3a except train “B.”	Same as 3a except for SG “B.”
	4b. Same as 3b, except for SG “B” and valves V057B and V058B.	Same as 3b except valves V057B and V058B and SG “B.”	Same as 3b except for V057B and V058B.

Table 10.4.9-1 (Sheet 1 of 2)

STARTUP FEEDWATER SYSTEM COMPONENT FAILURE ANALYSIS

Component	Failure Effect on Train	Failure Effect on System	Failure Effect on RCS
1. SGS PL V255A (SFCV)	1a. Valve fails closed or fails to open on command. SFW Flow is not available to SG A.	System is not available for SFW supply to SG "A."	None. Decay heat removal is maintained via PRHR actuation on ESF signal.
	1b. Valve fails open or fails to close on command. SFW flow is uncontrolled.	Downstream isolation valve V067A trips closed on high SG level; system pumps are tripped on high SG level.	None. RCS integrity is maintained by V067A closure and main feedwater isolation. SG overfill terminated by ESF closure of V067A.
2. SGS PL V225B (SFCV)	2a. Same as 1a except flow is not available to SG B.	System is not available for SFW supply to SG "B."	None. Same as 1a.
	2b. Same as 1b.	Same as 1b except valve V067B trips closed on high SG level.	Same as 1b except RCS integrity is maintained by V067B and main feedwater isolation, and overfill terminated by closure of V067B.
3. SGS PL V067A (SFIV)	3a. Valve fails closed. SFW flow is not available to SG A.	System is not available for SFW supply to SG "A."	None. Same as 1a.
	3b. Valve fails open. Isolation function of V067A is not available; backup isolation provided by V0255A and V256A.	None. Valve V255A is automatically closed and SFW pumps tripped on an ESF signal. SG overfill protection provided by automatic isolation of V255A.	None. RCS integrity is maintained by V255A closure to limit cooldown; PRHR available for decay heat removal and SG overfill protection provided by redundant isolation of V255A.

Table 10.4.9-1 (Sheet 2 of 2)

STARTUP FEEDWATER SYSTEM COMPONENT FAILURE ANALYSIS

Component	Failure Effect on Train	Failure Effect on System	Failure Effect on RCS
4. SGS PL V067B (SFIV)	4a. Same as 3a except flow not available to SG "B."	Same as 3a except SFW supply not available to SG "B."	Same as 1a.
	4b. Same as 3b.	Same as 3b except reference valve is V255B.	Same as 3b except reference valve is V255B.

Table 10.4.9-2

NOMINAL COMPONENT DESIGN DATA – STARTUP FEEDWATER SYSTEM

Startup Feedwater Pump	
Type	Multi-stage, centrifugal
Driver	Electric Motor
Quantity	2
Capacity	520 gpm @ 80°F
Head	3250 ft
Motor hp	800

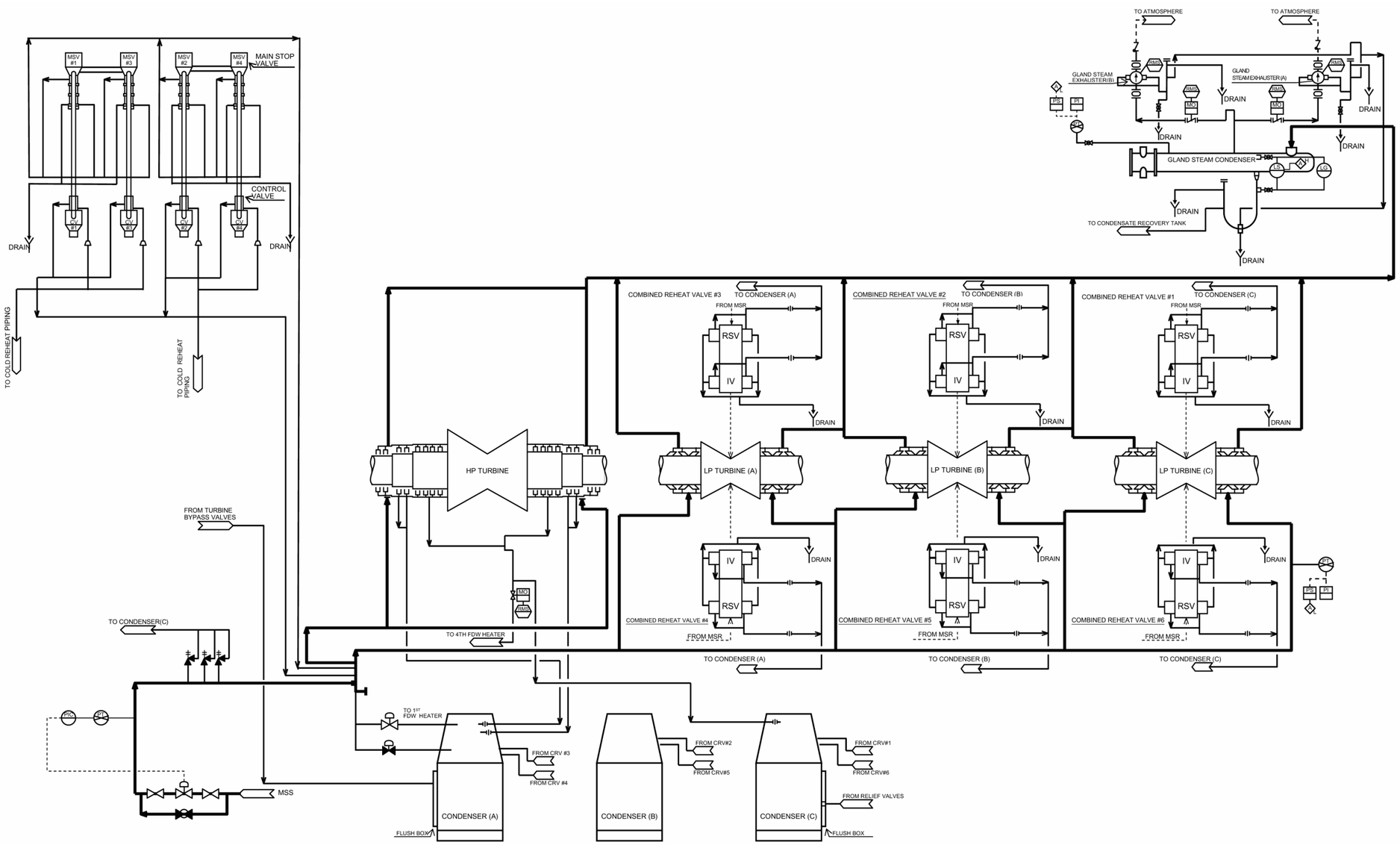

Figure 10.4.3-1

Figure represents system functional arrangement. Details internal to the system may differ as a result of implementation factors such as vendor-specific component requirements.

Gland Seal System Piping and Instrumental Diagram

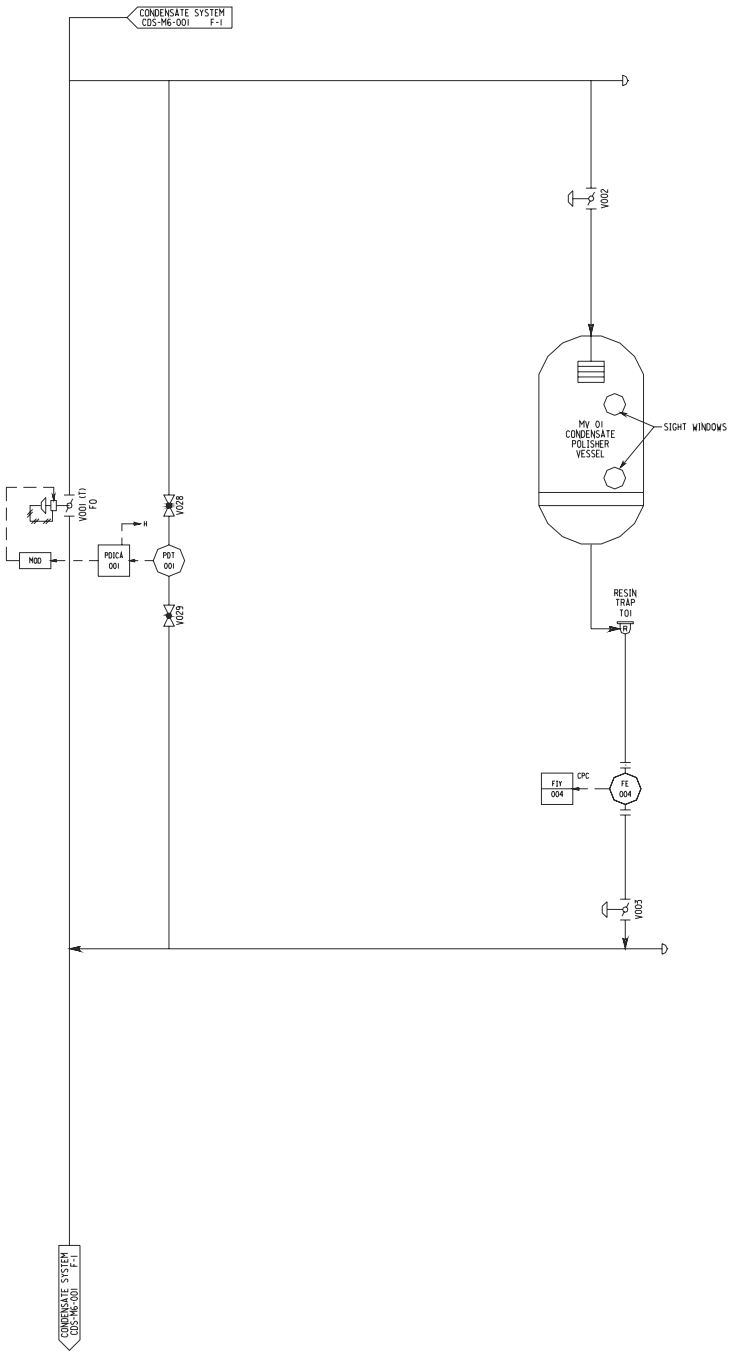

Inside Turbine Building

Figure represents system functional arrangement. Details internal to the system may differ as a result of implementation factors such as vendor-specific component requirements.

Figure 10.4.6-1

Condensate Polishing System Piping and Instrumentation Diagram (Typical)

[This page intentionally blank]

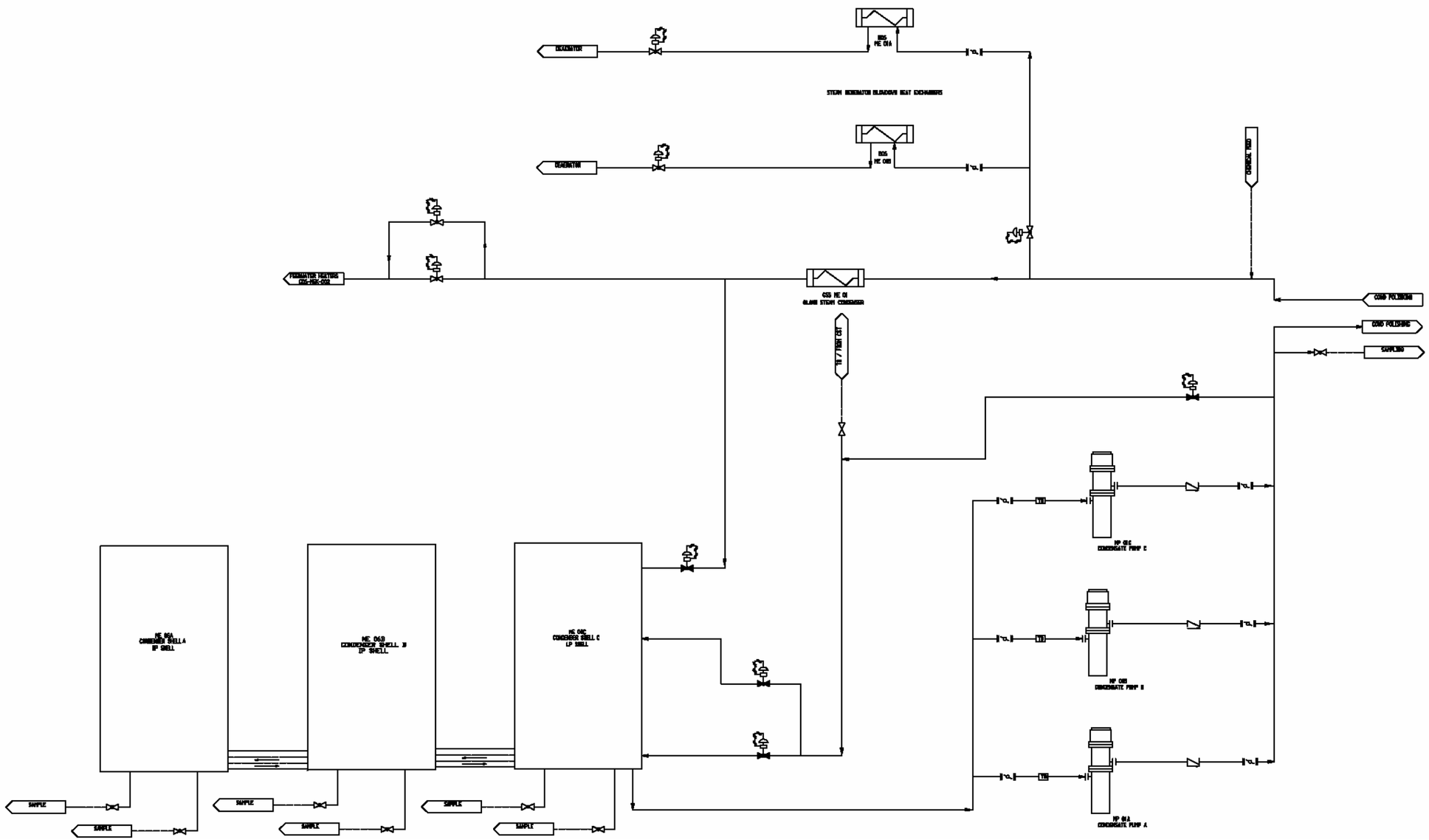

Figure 10.4.7-1 (Sheet 1 of 4)

Figure represents system functional arrangement. Details internal to the system may differ as a result of implementation factors such as vendor-specific component requirements.

Condensate and Feedwater System Piping and Instrumentation Diagram

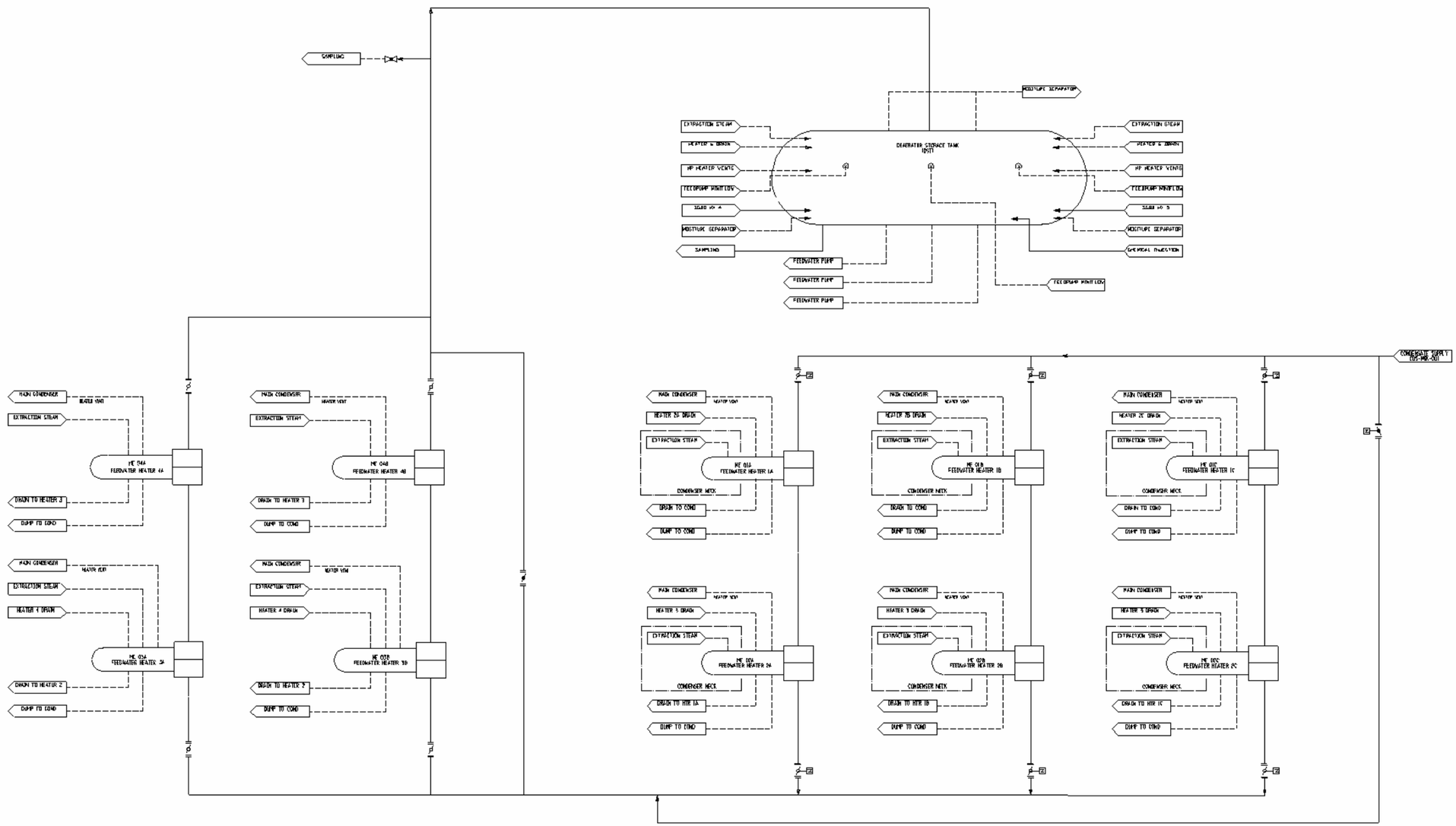

Figure 10.4.7-1 (Sheet 2 of 4)

Figure represents system functional arrangement. Details internal to the system may differ as a result of implementation factors such as vendor-specific component requirements.

Condensate and Feedwater System Piping and Instrumentation Diagram

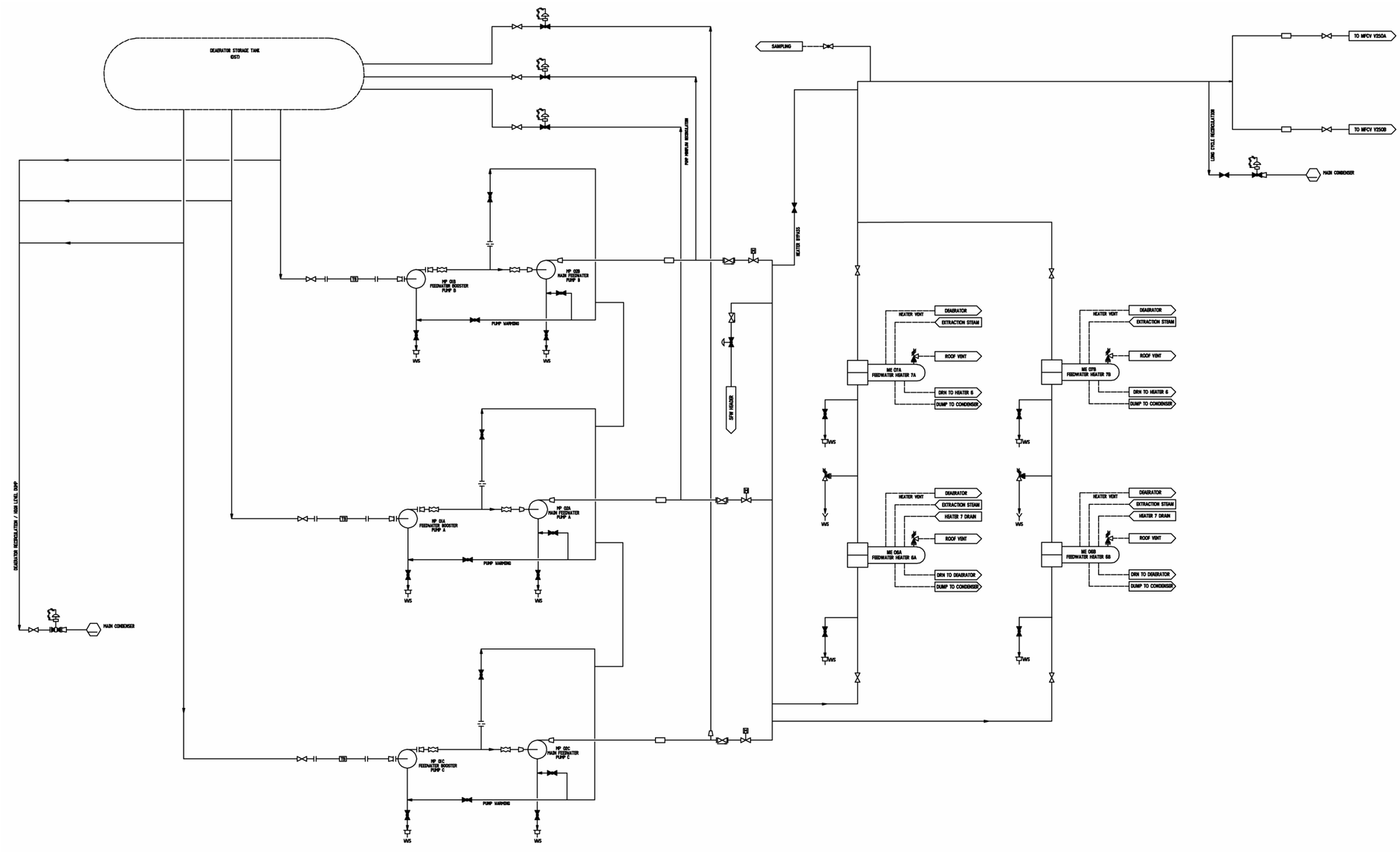

Figure 10.4.7-1 (Sheet 3 of 4)

Figure represents system functional arrangement. Details internal to the system may differ as a result of implementation factors such as vendor-specific component requirements.

Condensate and Feedwater System Piping and Instrumentation Diagram

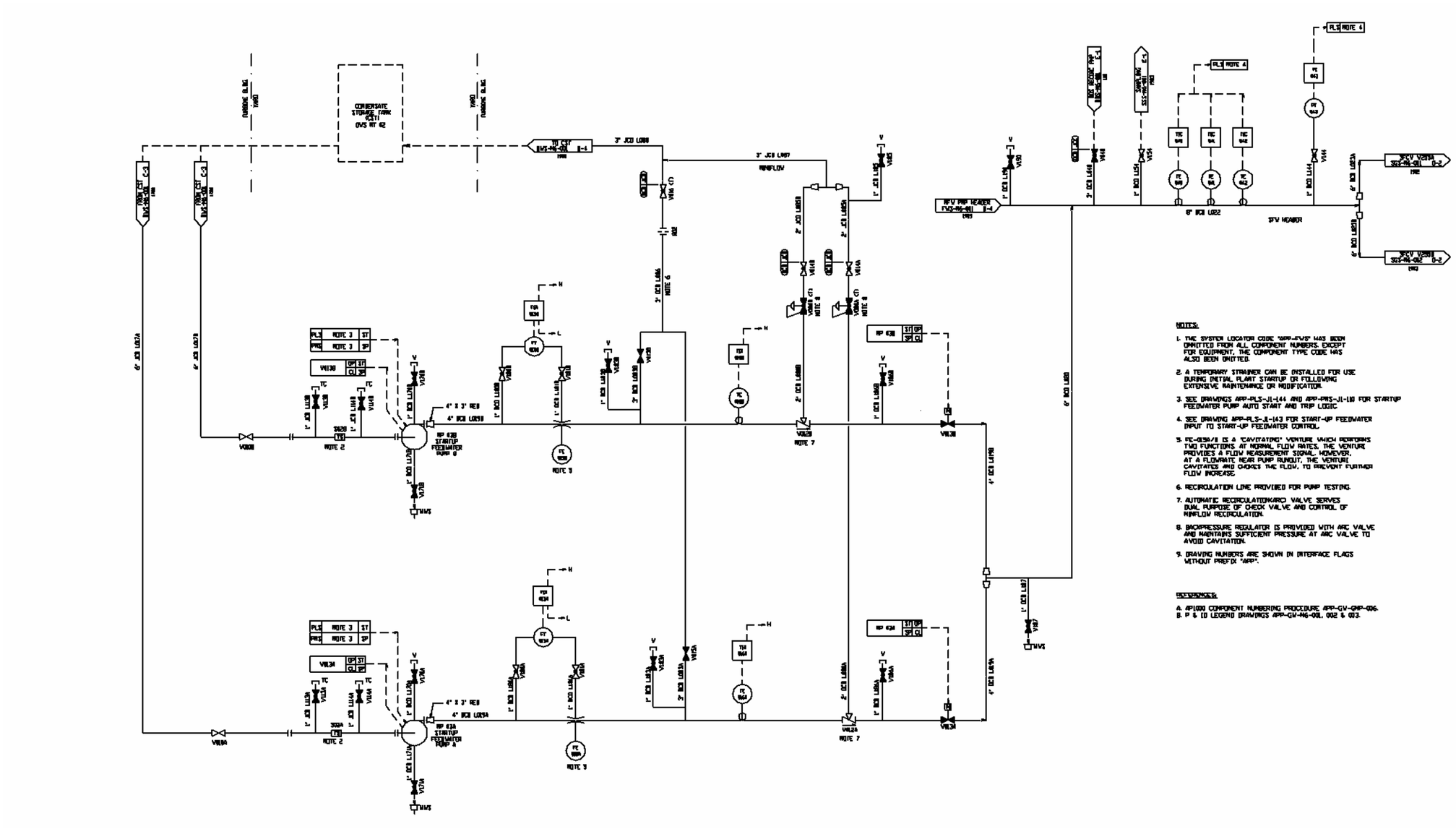

Figure 10.4.7-1 (Sheet 4 of 4)

Figure represents system functional arrangement. Details internal to the system may differ as a result of implementation factors such as vendor-specific component requirements.

Condensate and Feedwater System Piping and Instrumentation Diagram

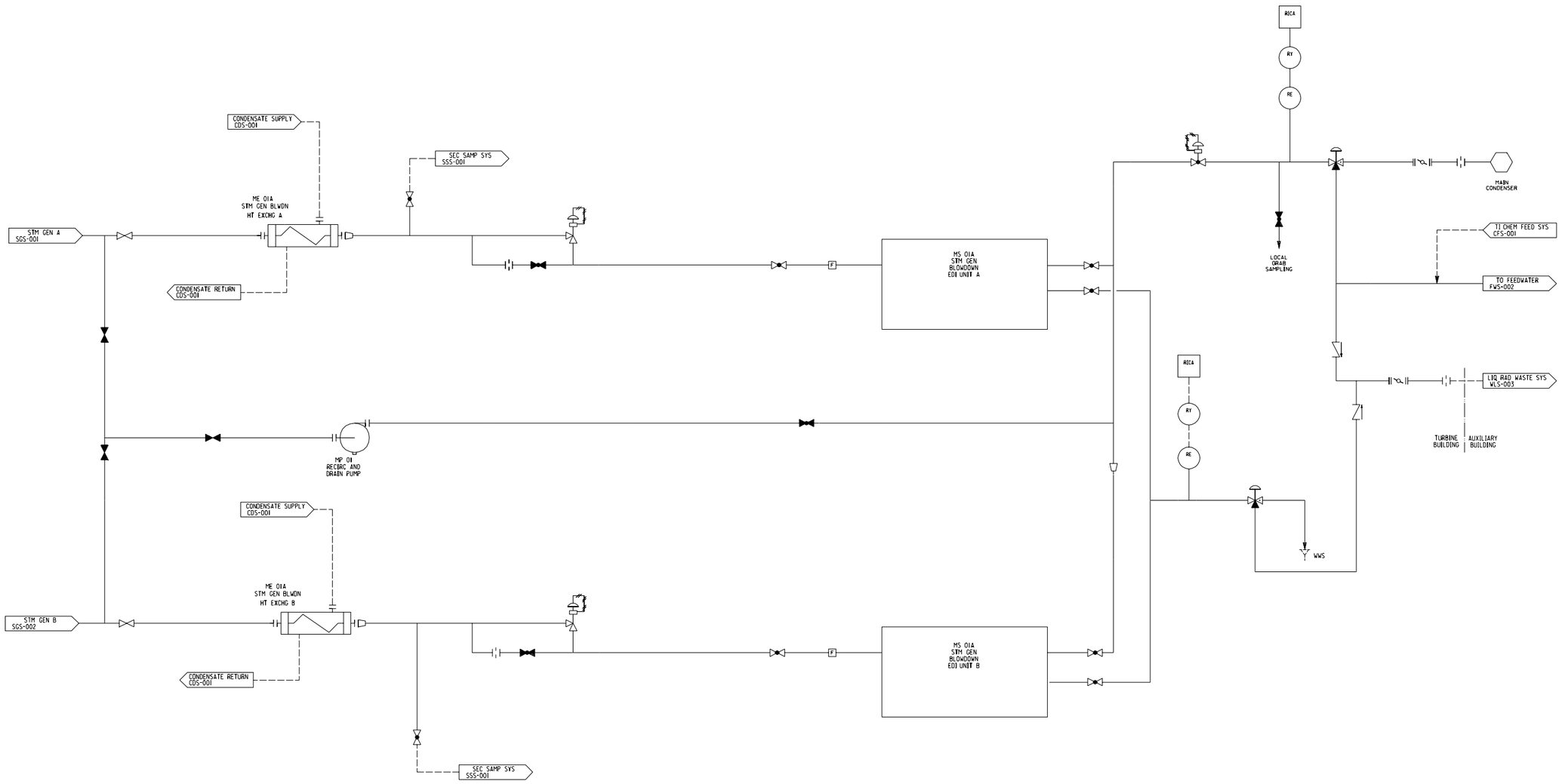

Inside Turbine Building

Figure 10.4.8-1

Figure represents system functional arrangement. Details internal to the system may differ as a result of implementation factors such as vendor-specific component requirements.

Steam Generator Blowdown System Piping and Instrumentation Diagram