MITSUBISHI HEAVY INDUSTRIES, LTD.
16-5, KONAN 2-CHOME, MINATO-KU
TOKYO, JAPAN

February 2, 2009

Document Control Desk
U.S. Nuclear Regulatory Commission
Washington, DC 20555-0001

Attention: Mr. Jeffrey A. Ciocco

Docket No. 52-021
MHI Ref: UAP-HF-09036

Subject: MHI's Response to US-APWR DCD RAI No. 111-932 Revision 0

Reference: 1) "Request for Additional Information No. 111-932 Revision 0, SRP Section: 06.02.01.02, Application Section: MUAP-07031 Report" dated December 3, 2008.

With this letter, Mitsubishi Heavy Industries, Ltd. ("MHI") transmits to the U.S. Nuclear Regulatory Commission ("NRC") a document entitled "Response to Request for Additional Information No. 111-932 Revision 0."

Enclosed are the responses to six RAIs contained within Reference 1.

MHI will need additional sensitivities analyses for revising the response to RAI (06.02.01.02-2 submitted on 16th January). This revised response will be submitted by 16th February.

As indicated in the enclosed materials, this document contains information that MHI considers proprietary, and therefore should be withheld from public disclosure pursuant to 10 C.F.R. § 2.390 (a)(4) as trade secrets and commercial or financial information which is privileged or confidential. A non-proprietary version of the document is also being submitted with the information identified as proprietary redacted and replaced by the designation "[ ]".

This letter includes a copy of the proprietary version (Enclosure 2) and a copy of the non-proprietary version (Enclosure 3), and the Affidavit of Yoshiki Ogata (Enclosure 1) which identifies the reasons MHI respectfully requests that all materials designated as "Proprietary" in Enclosure 2 be withheld from public disclosure pursuant to 10 C.F.R. § 2.390 (a)(4).

Please contact Dr. C. Keith Paulson, Senior Technical Manager, Mitsubishi Nuclear Energy Systems, Inc. if the NRC has questions concerning any aspect of the submittals. His contact information is below.

Sincerely,

Y. Ogata

Yoshiki Ogata
General Manager- APWR Promoting Department
Mitsubishi Heavy Industries, LTD.

D081
NRO

Enclosure:

1 - Affidavit of Yoshiki Ogata

2 - Response to Request for Additional Information No. 111-932 Revision 0 (proprietary)

3 - Response to Request for Additional Information No. 111-932 Revision 0 (non-proprietary)

CC: J. A. Ciocco
C. K. Paulson

Contact Information
C. Keith Paulson, Senior Technical Manager
Mitsubishi Nuclear Energy Systems, Inc.
300 Oxford Drive, Suite 301
Monroeville, PA 15146
E-mail: ck_paulson@mnes-us.com
Telephone: (412) 373-6466

ENCLOSURE 1

Docket No. 52-021
MHI Ref: UAP-HF-09036

MITSUBISHI HEAVY INDUSTRIES, LTD.

AFFIDAVIT

I, Yoshiki Ogata, state as follows:

1. I am General Manager, APWR Promoting Department, of Mitsubishi Heavy Industries, LTD ("MHI"), and have been delegated the function of reviewing MHI's US-APWR documentation to determine whether it contains information that should be withheld from public disclosure pursuant to 10 C.F.R. § 2.390 (a)(4) as trade secrets and commercial or financial information which is privileged or confidential.

2. In accordance with my responsibilities, I have reviewed the enclosed document entitled "Response to Request for Additional Information No. 111-932 Revision 0" dated January 2009, and have determined that portions of the document contain proprietary information that should be withheld from public disclosure. Those pages containing proprietary information are identified with the label "Proprietary" on the top of the page and the proprietary information has been bracketed with an open and closed bracket as shown here "[ ]". The first page of the document indicates that all information identified as "Proprietary" should be withheld from public disclosure pursuant to 10 C.F.R. § 2.390 (a)(4).

3. The information identified as proprietary in the enclosed document has in the past been, and will continue to be, held in confidence by MHI and its disclosure outside the company is limited to regulatory bodies, customers and potential customers, and their agents, suppliers, and licensees, and others with a legitimate need for the information, and is always subject to suitable measures to protect it from unauthorized use or disclosure.

4. The basis for holding the referenced information confidential is that it describes the unique design of the safety analysis and the general arrangement related to the US-APWR specific design, developed by MHI and not used in the exact form by any of MHI's competitors. This information was developed at significant cost to MHI, since it required the performance of research and development and the performance of detailed hardware design and software development extending over several years.

5. The referenced information is being furnished to the Nuclear Regulatory Commission ("NRC") in confidence and solely for the purpose of information to the NRC staff.

6. The referenced information is not available in public sources and could not be gathered readily from other publicly available information. Other than through the provisions in paragraph 3 above, MHI knows of no way the information could be lawfully acquired by organizations or individuals outside of MHI.

7. Public disclosure of the referenced information would assist competitors of MH in their design of new nuclear power plants without incurring the costs or risks associated with the design and testing of the subject systems. Therefore, disclosure of the information

contained in the referenced document would have the following negative impacts on the competitive position of MH in the U.S. nuclear plant market:

A. Loss of competitive advantage due to the costs associated with development of the safety analysis and the unique plant design of the general arrangement. Providing public access to such information permits competitors to duplicate or mimic the methodology without incurring the associated costs.

B. Loss of competitive advantage of the US-APWR created by benefits of enhanced plant safety, and reduced operation and maintenance costs. .

I declare under penalty of perjury that the foregoing affidavit and the matters stated therein are true and correct to the best of my knowledge, information and belief.

Executed on this 2nd day of February, 2009.

Y. Ogata

Yoshiki Ogata,
General Manager- APWR Promoting Department
Mitsubishi Heavy Industries, LTD.

Enclosure 3

UAP-HF-09036
Docket Number 52-021

Response to Request for Additional Information
No. 111-932 Revision 0

February 2009
(Non-Proprietary)

RESPONSE TO REQUEST FOR ADDITIONAL INFORMATION

2/2/2009

US-APWR Design Certification

Mitsubishi Heavy Industries

Docket No.52-021

RAI NO.:	**NO.111-932 REVISION 0**
SRP SECTION:	**06.02.01.02 – Subcompartment Analysis**
APPLICATION SECTION:	**MUAP-07031 Report**
DATE OF RAI ISSUE:	**12/3/2008**

QUESTION NO. : 06.02.01.02-3

MUAP-07031 report: Based on codes comparison presented in section 5.3, the conclusion presented in section 5.3.3 is that "GOTHIC code is suitable for the containment subcompartment pressure analyses." This conclusion is very broad, and can not be supported by examining only one transient. Please, provide:

A. Additional information regarding the options used in the code, the specific models exercised by this transient, etc. in order to extend these conclusions to other subcompartment analyses,
B. Discuss and/or provide additional justification in support of the above conclusion.

ANSWER:

Response to Item A

Table 3-1 and 3-2 show the volume data and path flow data of GOTHIC, respectively for Byron/Braidwood (B/B) Stations used in the GOTHIC calculation. The data shown in Table 3-1 are the same as those in Table 5-3-1 of the report MUAP-07031. But the air pressure of 14.05 psia and the steam pressure of 0.85 psia for TMD are converted to total pressure of 14.9 psia and relative humidity of 50 (%) for GOTHIC. The data of Table 3-2 correspond to Table 5-3-2 of MUAP-07031 report. That is, Fwd./Rev. loss coeff. , Inertia length, Hyd. Diam., Flow area and Friction length for GOTHIC correspond to K-Fac, Length, Hydr. D., Flow A and Equip. A, respectively for TMD. However, the Relative roughness (ε /D) for GOTHIC is converted from the friction factor (F-Fac) according to the formulation for the friction factor in turbulent flow for the greater Reynolds number from GOTHIC technical manual.

$$1/\sqrt{(F-Fac)} \cong -2\log\left[\frac{\varepsilon/D}{3.7}\right]$$

For F-Fac = 0.022, ε /D becomes roughly 0.0015.

The Flow path option "Comp. Opt." for GOTHIC is set to "ON" in place of "A/A" for TMD. And the Flow path option "Critical Flow Model" for GOTHIC is set to "HEM" as the acceptable vent critical flow correlation.

Furthermore, two parameters in Run options of Run Control for GOTHIC are changed from the default values;

Parameter- Force Equilibrium --- ignore → include

Parameter- Drop-Liq. Conversion--- include → ignore

Other parameters retain the default values.

These Run options correspond to the acceptable vent flow behavior based on a homogeneous mixture in thermal equilibrium, with the assumption of 100% water entrainment.

In brief, the options used in the code are the same options as those in the section 4.1.2.2 "GOTHIC input data "of MUAP-07031 report. Any specific models exercised by this transient are not used.

Response to Item B.

The loop compartments, upper pressurizer cubicle, and steamline pipe chase are analyzed for Byron/Braidwood Stations. In the section 5.3 of MUAP-07031 report, only the pressure transients for the steamline pipe chase were adopted for these comparisons. Therefore, the pressure transients for the loop compartments and the upper pressurizer cubicle are shown here additionally.

The pressure responses for loop compartments:

Two postulated breaks, a double-ended cold leg (DECL) guillotine rupture and a double-ended hot leg (DEHL) guillotine rupture, maximize mass and energy release to the loop compartment. A DEHL break in volume 3 yielded the maximum pressure differential for the loop compartment. Also, a DECL break yielded a maximum pressure differential when the break occurred in volume 3. The break compartment (volume 3) and upper compartment (volume 7) pressure transients by GOTHIC are graphed in Figures 3-1, 3-2, 3-3, and 3-4, respectively with the comparisons of TMD and GOTHIC (Base option). The mass and energy release rates for the DEHL guillotine rupture and the DECL guillotine rupture derive from the Table 6.2-13 and 6.2-14, respectively in the section of FSAR chapter 6 for Byron/Braidwood (B/B) stations (Ref. 8-11 of MUAP-0731) and are presented in Table 3-3 and 3-4, respectively, being processed to reduce the numbers of release rates input data points as well as TMD. Here, GOTHIC (Base option) means that in the GOTHIC input data, the base vent flow behavior model options use all the default values described in the section 4.1.2.2 of MUAP-0731. The trend of GOTHIC pressure transient behaviors reproduces that of TMD well. But the pressures are slightly lower than that of TMD, and much higher than that of GOTHIC (Base option).

The Upper Pressurizer Cubicle:

A double-ended spray line break is most severe for the vapor space in the upper pressurizer cubicle. The break compartment (volume 28) and upper compartment (volume 7) pressure transients by GOTHIC are graphed in Figures 3-5 and 3-6 , respectively with the comparisons of TMD and GOTHIC (Base option). The mass and energy release rates derive from the Table 6.2-15 in the section of FSAR Chapter 6 for Byron/Braidwood (B/B) Stations (Ref. 8-11 of MUAP-0731) and are presented in Table 3-5, being processed to reduce the numbers of release rates input data points as well as TMD. The trend of GOTHIC pressure transient behaviors reproduces well that of TMD. But the pressures are slightly higher than that of TMD, and much higher than that of GOTHIC (Base option).

Table 3-1 GOTHIC Control Volume Description for B/B Stations

Volume #	Description	Volume (ft^3)	Temp. (F)	Total pressure (psia)	Relative Humidity (%)
1	1 Vol	36152.	120.	14.9	50.
2	2 Vol	33294.	120.	14.9	50.
3	3 Vol	35011.	120.	14.9	50.
4	4 Vol	41024.	120.	14.9	50.
5	5 Vol	38625.	120.	14.9	50.
6	6 Vol	36251.	120.	14.9	50.
7	7 Vol	2254200.	120.	14.9	50.
8	8 Vol	9983.	120.	14.9	50.
9	9 Vol	3742.	120.	14.9	50.
10	10 Vol	4159.	120.	14.9	50.
11	11 Vol	15677.	120.	14.9	50.
12	12 Vol	20743.	120.	14.9	50.
13	13 Vol	9914.	120.	14.9	50.
14	14 Vol	3515.	120.	14.9	50.
15	15 Vol	5435.	120.	14.9	50.
16	16 Vol	25159.	120.	14.9	50.
17	17 Vol	6968.	120.	14.9	50.
18	18 Vol	10232.	120.	14.9	50.
19	19 Vol	39190.	120.	14.9	50.
20	20 Vol	51611.	120.	14.9	50.
21	21 Vol	24844.	120.	14.9	50.
22	22 Vol	6250.	120.	14.9	50.
23	23 Vol	12236.	120.	14.9	50.
24	24 Vol	3145.	120.	14.9	50.
25	25 Vol	11472.	120.	14.9	50.
26	26 Vol	11138.	120.	14.9	50.
27	27 Vol	2838	120.	14.9	50.
28	28 Vol	4993.	120.	14.9	50.

Table 3-2 GOTHIC Flow path description for B/B Stations

F.P. #	Description	Vol. A	Vol. B	Flow Area (ft2)	Hyd. Diam. (ft)	Inertia Length (ft)	Friction Length (ft)	Relative Roughness	Fwd./Rev. Loss Coeff.	Comp. Opt.	Critical Flow Model
1	Break	3 or 28	1F	1.	1.	1e-005	0.	0.	0.	OFF	OFF
2	1 - 16	1	16	21.	4.2	8.04	7.31	0.0015	3.653	ON	HEM
3	2 - 1	2	1	572.	11.	40.	40.	0.0015	0.59	ON	HEM
4	3 - 4	3	4	220.	10.	80.	70.	0.0015	5.	ON	HEM
5	4 - 28	4	28	19.4	1.09	9.71	2.	0.0015	1.7	ON	HEM
6	5 - 6	5	6	572.	11.	40.	40.	0.0015	0.59	ON	HEM
7	6 - 1	6	1	578.	15.	52.	53.	0.0015	1.02	ON	HEM
8	7 - 6	7	6	23.2	4.73	85.4	51.51	0.0015	2.53	ON	HEM
9	8 - 15	8	15	133.	10.58	43.	43.	0.0015	1.7	ON	HEM
10	9 - 8	9	8	119.	10.6	27.25	38.5	0.0015	0.258	ON	HEM
11	11 - 10	11	10	187.	11.05	32.53	24.94	0.0015	2.515	ON	HEM
12	12 - 20	12	20	632.4	0.166	12.94	6.95	0.0015	2.35	ON	HEM
13	13 - 12	13	12	182.	12.13	34.11	34.07	0.0015	0.205	ON	HEM
14	14 - 15	14	15	119.	10.6	32.45	26.31	0.0015	2.15	ON	HEM
15	16 - 17	16	17	140.	7.2	42.63	0.3794	0.0015	0.71	ON	HEM
16	17 - 18	17	18	266.5	11.91	17.38	15.43	0.0015	0.333	ON	HEM
17	18 - 19	18	19	140.	7.18	32.42	25.9	0.0015	0.967	ON	HEM
18	19 - 20	19	20	133.	11.32	71.8	56.37	0.0015	1.748	ON	HEM
19	20 - 21	20	21	140.	7.31	47.42	39.7	0.0015	0.829	ON	HEM
20	21 - 22	21	22	70.	3.78	9.38	3.97	0.0015	1.911	ON	HEM
21	22 - 23	22	23	140.	7.18	49.18	42.23	0.0015	0.984	ON	HEM
22	23 - 16	23	16	140.	7.2	33.93	28.17	0.0015	0.97	ON	HEM
23	24 - 18	24	18	17.508	3.68	3.15	2.63	0.0015	3.114	ON	HEM
24	25 - 17	25	17	945.	6.82	8.69	6.82	0.0015	0.876	ON	HEM
25	26 - 22	26	22	841.3	26.1	9.2	8.6	0.0015	0.12	ON	HEM
26	1 - 7	1	7	197.	10.	45.	45.	0.0015	1.84	ON	HEM
27	2 - 7	2	7	186.	10.	60.	60.	0.0015	1.84	ON	HEM
28	3 - 7	3	7	219.	10.	45.	45.	0.0015	1.84	ON	HEM

F.P. #	Description	Vol. A	Vol. B	Flow Area (ft2)	Hyd. Diam. (ft)	Inertia Length (ft)	Friction Length (ft)	Relative Roughness	Fwd./Rev. Loss Coeff.	Comp. Opt.	Critical Flow Model
29	4 - 7	4	7	179.	10.	45.	45.	0.0015	1.84	ON	HEM
30	5 - 7	5	7	190.5	10.	60.	60.	0.0015	1.84	ON	HEM
31	6 - 7	6	7	199.	10.	45.	45.	0.0015	1.84	ON	HEM
32	7 - 15	7	15	96.4	0.47	1.8	0.047	0.0015	1.85	ON	HEM
33	8 - 7	8	7	90.	0.26	1.22	0.028	0.0015	2.23	ON	HEM
34	9 - 10	9	10	119.	10.6	20.	18.	0.0015	0.258	ON	HEM
35	11 - 7	11	7	332.8	0.23	2.09	0.12	0.0015	1.79	ON	HEM
36	12 - 7	12	7	504.	0.2	2.66	0.23	0.0015	1.89	ON	HEM
37	13 - 7	13	7	176.	0.153	3.35	1.35	0.0015	1.62	ON	HEM
38	14 - 7	14	7	48.	0.133	14.8	3.177	0.0015	1.14	ON	HEM
39	16 - 8	26	8	297.	7.92	23.77	21.16	0.0015	0.374	ON	HEM
40	17 - 9	17	9	114.8	0.11	22.27	20.76	0.0015	2.156	ON	HEM
41	18 - 10	18	10	45.	0.133	1.18	0.59	0.0015	2.234	ON	HEM
42	19 - 11	19	11	473.	0.178	17.08	15.48	0.0015	1.843	ON	HEM
43	21 - 13	21	13	204.	0.133	12.5	6.39	0.0015	2.	ON	HEM
44	25 - 7	25	7	198.	9.21	44.71	35.5	0.0015	1.	ON	HEM
45	26 - 14	26	14	420.9	19.1	15.1	12.84	0.0015	0.272	ON	HEM
46	27 - 7	27	7	82.87	6.19	25.	8.38	0.0015	1.64	ON	HEM
47	28 - 7	28	7	58.2	3.05	20.07	18.7	0.0015	0.7	ON	HEM
48	1 - 7	1	7	23.2	4.73	85.4	51.51	0.0015	2.53	ON	HEM
49	2 - 3	2	3	572.	11.	40.	40.	0.0015	0.59	ON	HEM
50	3 - 7	3	7	23.2	4.73	85.4	51.51	0.0015	2.53	ON	HEM
51	4 - 7	4	7	23.2	4.73	85.4	51.51	0.0015	2.53	ON	HEM
52	5 - 4	5	4	572.	11.	40.	40.	0.0015	0.59	ON	HEM
53	11 - 12	11	12	36.	4.8	33.59	19.07	0.0015	1.273	ON	HEM
54	13 - 14	13	14	119.	10.6	23.	19.5	0.0015	0.25	ON	HEM
55	14 - 22	14	22	7.88	0.133	7.82	3.	0.0015	1.	ON	HEM
56	15 - 23	15	23	139.8	0.133	6.63	1.72	0.0015	1.265	ON	HEM
57	25 - 9	25	9	229.5	12.93	27.04	25.84	0.0015	2.475	ON	HEM
58	26 - 7	26	7	198.	9.21	44.71	35.5	0.0015	1.	ON	HEM

Table 3-3 Mass & Energy Release Rates for DEHL break

Time(S)	break flow(lbm/s)	break enthalpy(Btu/lbm)
0.00000	10450.31	649.82
0.00251	91702.623	647.58
0.00502	84987.827	645.66
0.05002	82700.645	647.32
0.10005	91697.001	647.19
0.15014	82647.574	644.94
0.20002	80496.815	642.42
0.25022	78591.574	639.26
0.30019	76725.683	636.27
0.35022	75341.372	633.54
0.40024	74071.956	631.23
0.45031	73262.141	629.03
0.50024	72273.965	627.29
0.55614	71625.934	625.62
0.60028	70846.25	624.65
0.65032	70279.762	623.89
0.70037	69655.953	623.29
0.75002	69029.48	622.98
0.80016	68426.399	622.81
0.85015	67811.153	622.75
0.90014	67177.304	622.91
0.95015	66352.609	623.10
1.00009	66067.933	623.46
1.05030	65604.456	623.92
1.10039	65077.242	624.43
1.15005	64460.076	624.94
1.20022	63921.631	625.55
1.25009	63380.655	626.11
1.30021	62089.985	626.67
1.35018	62360.042	627.20
1.40030	61069.305	627.71
1.45011	61327.869	628.20
1.50013	60753.043	628.67
1.55010	60152.311	629.14
1.60414	59500.198	629.59
1.65031	59067.275	630.07
1.70037	58227.768	630.59
1.75010	57570.888	631.14
1.80033	56924.962	631.75
1.85043	56285.021	632.41
1.90025	55632.256	633.10
1.95025	54981.66	633.61
2.00032	54354.119	634.58

Table 3-4 Mass & Energy Release Rates for DECL break

Time(S)	break flow(lbm/s)	break enthalpy(Btu/lbm)
0.00000	10450	558.51
0.00252	65293.389	553.64
0.00501	65350.597	553.40
0.05001	67982.945	554.71
0.10002	101811.95	555.75
0.15005	101811.95	555.75
0.20014	100985.18	555.86
0.25019	101673.22	555.95
0.30012	100209.94	555.91
0.35003	101033.49	556.00
0.40013	99105.29	555.86
0.45011	99074.658	555.98
0.50010	98256.31	556.01
0.55001	97970.536	556.15
0.60016	97034.19	556.26
0.65006	96605.719	556.46
0.70010	95749.445	556.68
0.75005	95014.279	556.95
0.80003	94221.962	557.26
0.85000	93277.468	557.60
0.90012	92237.35	557.98
0.95007	92101.935	558.46
1.00003	91507.811	558.91
1.05006	90810.29	559.39
1.10003	90191.154	559.90
1.15017	89579.39	560.43
1.20007	88514.882	560.97
1.25021	87416.555	561.53
1.30017	86243.959	562.12
1.35011	85068.956	562.71
1.40001	84077.437	563.30
1.45012	83070.233	563.91
1.50011	82513.65	564.52
1.55011	81609.505	565.12
1.60004	80867.656	565.72
1.65019	80095.162	566.26
1.70057	79135.253	566.81
1.75057	78073.107	567.23
1.80000	76871.315	567.57
1.85005	75758.761	567.85
1.93011	74603.534	568.11
1.95016	73533.736	568.37
2.00000	72566.963	568.61

Table 3-5 Mass & Energy Release Rates for a double-ended Spray Line break

Time(S)	break flow(lbm/s)	break enthalpy(Btu/lbm)
0.00000	0	0
0.00251	5552.0269	613.73
0.00502	5756.6695	611.71
0.05005	6255.1735	603.74
0.10008	6273.5718	602.47
0.15011	6166.741	602.75
0.20015	6057.0812	603.29
0.25009	6018.4316	603.48
0.30004	5925.2478	604.01
0.35027	5901.4291	604.12
0.40002	5902.6209	604.07
0.45005	5789.4038	604.72
0.50011	5760.3602	604.83
0.55000	5797.0116	604.52
0.60004	5749.2097	604.75
0.65003	5717.6191	604.86
0.70010	5736.6181	604.64
0.75003	5709.468	604.73
0.80003	5685.676	604.79
0.85003	5699.4327	604.60
0.90008	5683.0007	604.62
0.95005	5667.307	604.63
1.00005	5671.7795	604.51
1.05002	5654.238	604.54
1.10009	5657.8617	604.43
1.15011	5642.7925	604.44
1.20005	5642.6635	604.36
1.25004	5632.5971	604.35
1.30036	5624.5751	604.32
1.35009	5616.3063	604.30
1.40025	5605.6208	604.30
1.45004	5599.0362	604.27
1.50036	5588.8967	604.27
1.55034	5579.8754	604.26
1.60010	5570.3163	604.26
1.65004	5567.0531	604.23
1.70008	5558.3218	604.23
1.75012	5560.118	604.15
1.80010	5558.8433	604.11
1.85036	5558.0249	604.06
1.90031	5551.3019	604.05
1.95012	5545.001	604.04
2.00000	5535.8334	604.06

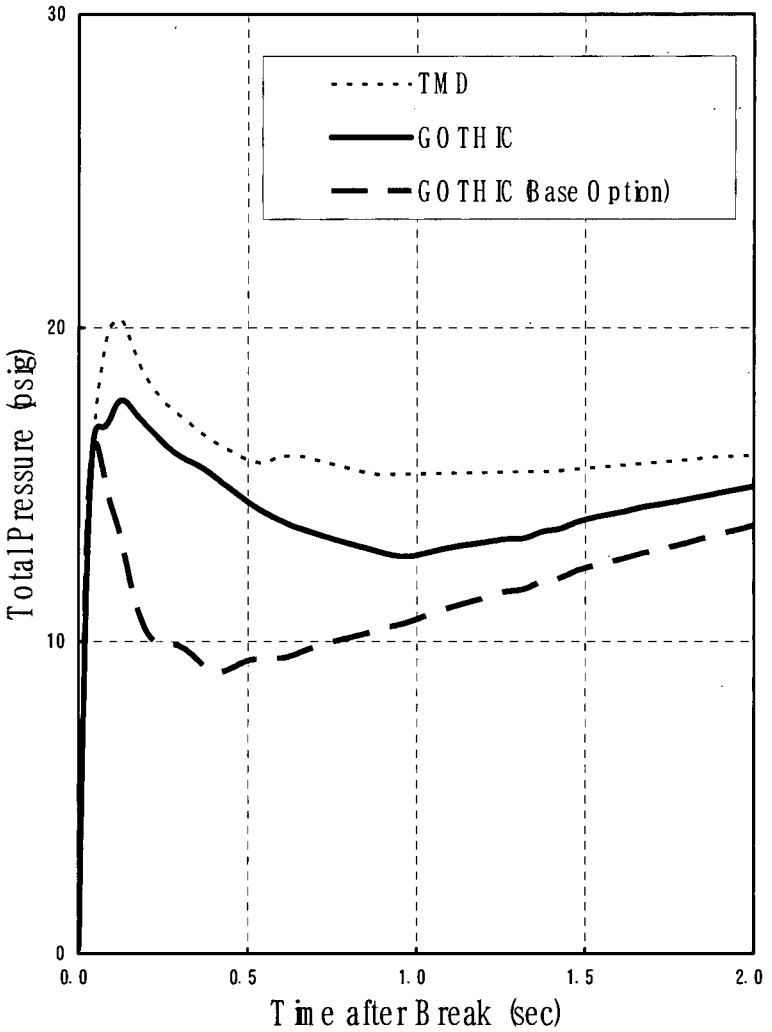

Figure 3-1 Pressures in Volume 3 for DEHL Break

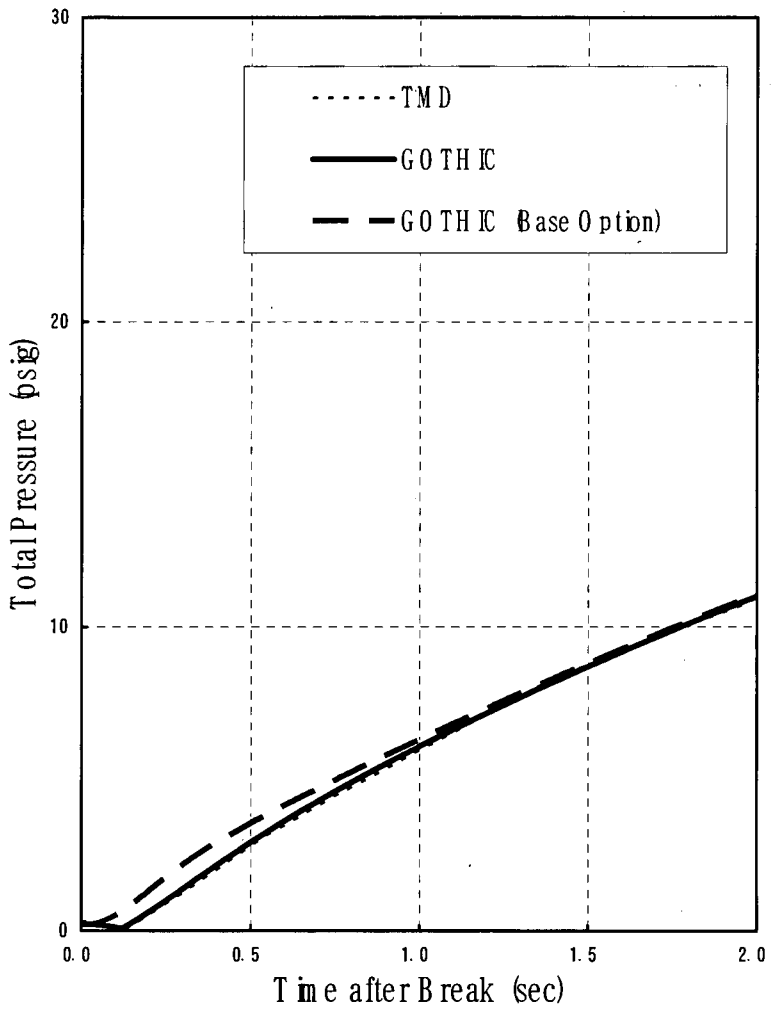

Figure 3-2 Pressures in Volume 7 for DEHL Break

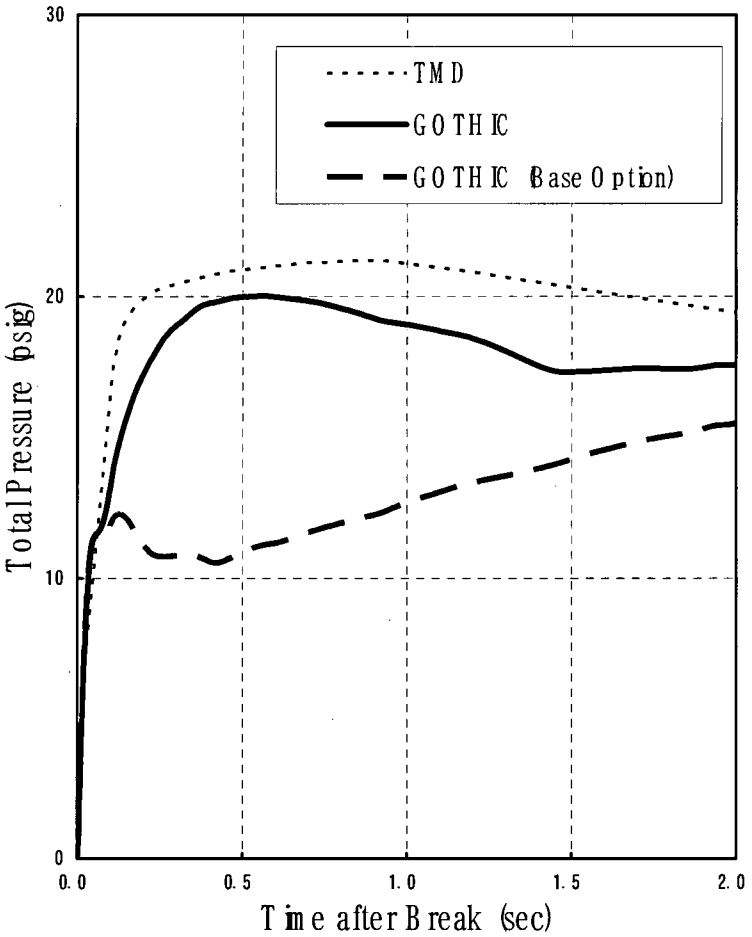

Figure 3-3 Pressures in Volume 3 for DECL Break

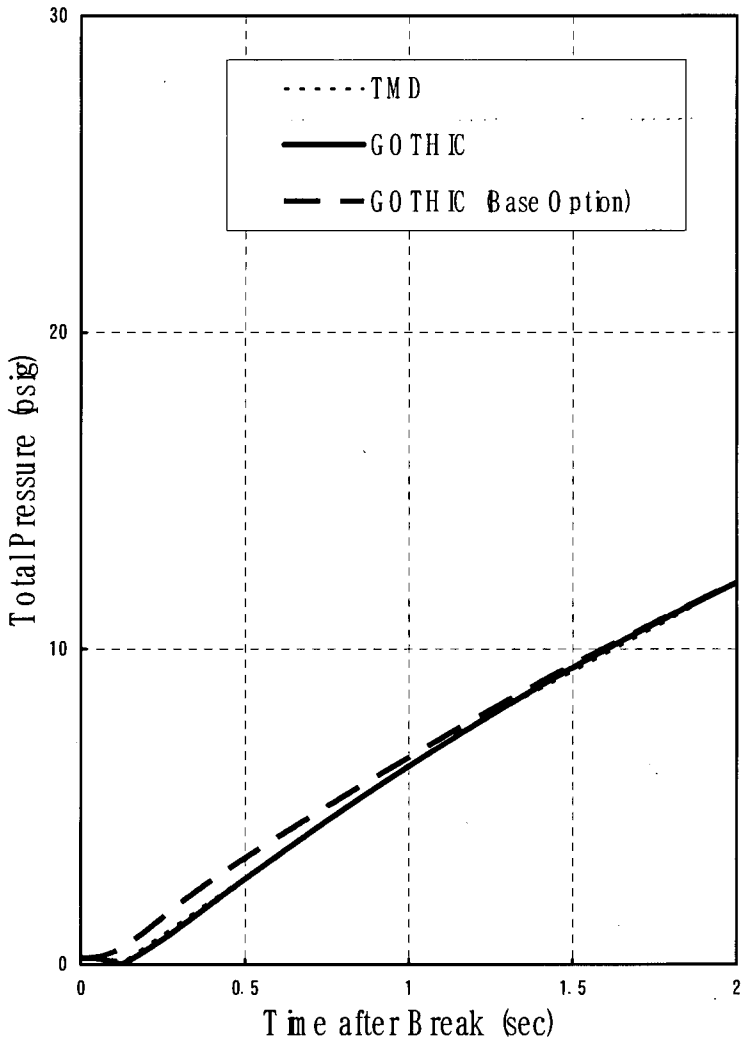

Figure 3-4 Pressures in Volume 7 for DECL Break

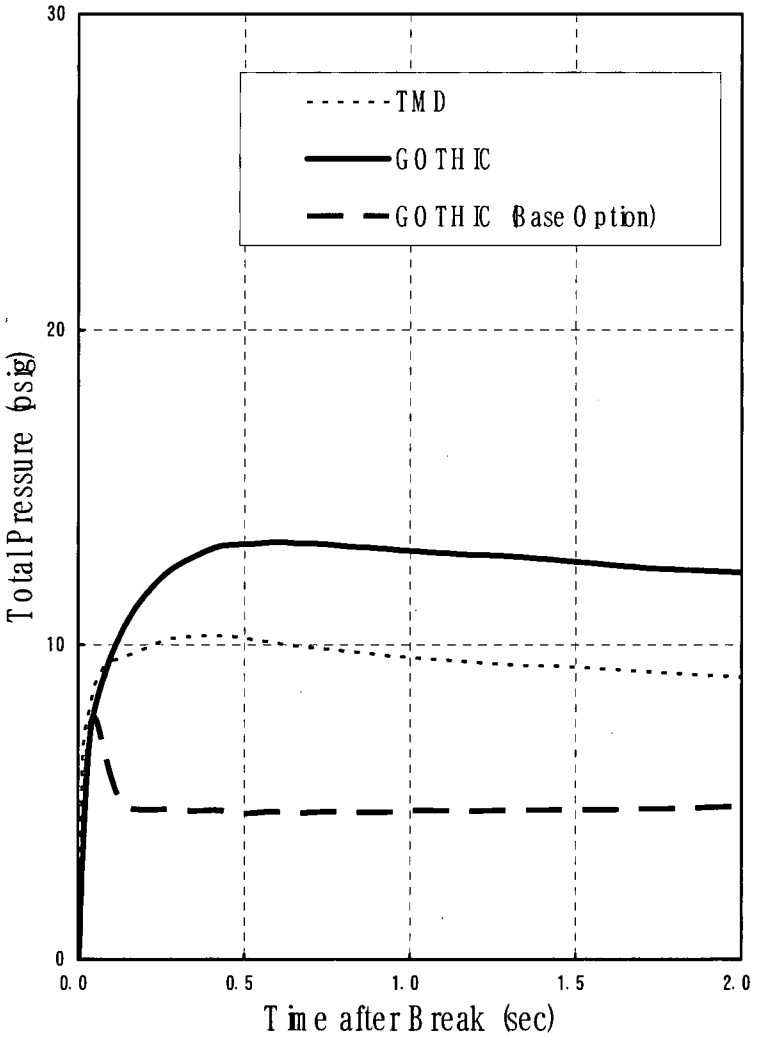

Figure 3-5 Pressures in Volume 28 for Spray Line Break

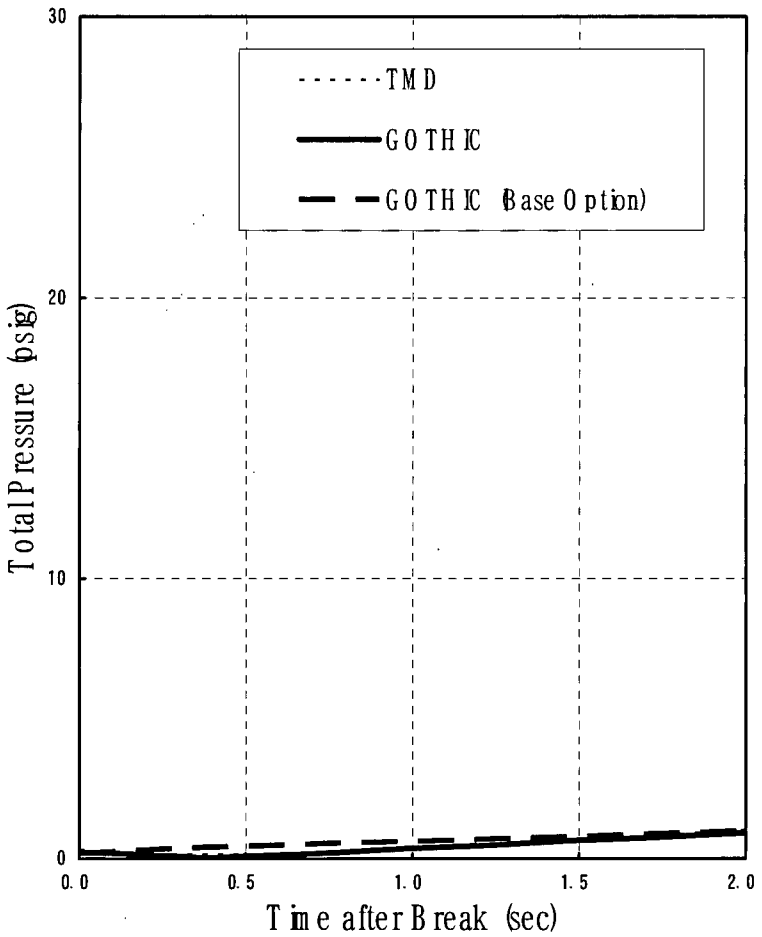

Figure 3-6 Pressures in Volume 7 for Spray Line Break

Impact on DCD

The additional information about the GOTHIC option and the additional confirmation will be added in next revision of MUAP-07031.

Impact on COLA

There is no impact on the COLA.

Impact on PRA

There is no impact on the PRA.

RESPONSE TO REQUEST FOR ADDITIONAL INFORMATION

2/2/2009

US-APWR Design Certification

Mitsubishi Heavy Industries

Docket No.52-021

RAI NO.:	**NO.111-932 REVISION 0**
SRP SECTION:	**06.02.01.02 – Subcompartment Analysis**
APPLICATION SECTION:	**MUAP-07031 Report**
DATE OF RAI ISSUE:	**12/3/2008**

QUESTION NO. : 06.02.01.02-4

MUAP-07031 report: The regenerative heat exchanger room, the letdown heat exchanger room, and the pressurizer spray valve room were not considered in the subcompartment analysis because vent paths were large compared to line sizes. Supporting documentation needs to be provided showing the volumes for these rooms, vent paths and areas, and size and energy content of the piping to confirm this conclusion.

ANSWER

The subcompartment pressure analysis for the regenerative heat exchanger room, the regenerative heat exchanger valve room and the letdown heat exchanger room were performed to confirm that peak differential pressure between the inside subcompartment and the containment atmosphere.

There is not any piping postulated break in the pressurizer spray valve room, because the terminal ends for pressurizer spray line are not located in the pressurizer valve room. Therefore the subcompartment analysis for pressurizer spray valve room was not performed.

The detailed information for the subcompartment pressure analysis for the regenerative heat exchanger room, the regenerative heat exchanger valve room and the letdown heat exchanger room are shown as follows.

Table of Contents

1. Reegenerative heat exchanger room and Regenerative Heat exchanger valve room compartment 5
1.1. Modeling 5
1.2. Short term mass and energy release data 5
1.3. Calculated pressure responses 6
2. High energy pipes penetrating Letdown heat exchanger valve room compartment 75
2.1. Modeling 75
2.2. Short term mass and energy release data 75
2.3. Calculated pressure responses 76

List of Tables

Table 4-1 High energy pipes penetrating the regenerative heat exchanger room and regenerative heat exchanger valve room compartment 8
Table 4-2 Regenerative heat exchanger room and Regenerative heat exchanger valve room compartment Nodal Description 8
Table 4-3 Regenerative heat exchanger room and Regenerative heat exchanger valve room compartment Nodal Description 16
Table 4-4 Regenerative heat exchanger room and Regenerative heat exchanger valve room compartment Nodal Description 19
Table 4-5 Regenerative heat exchanger room and Regenerative heat exchanger valve room compartment Nodal Description 26
Table 4-6 Mass and Release Rates 29
Table 4-7 Regenerative heat exchanger room and Regenerative heat exchanger valve room compartment Nodal Description 38
Table 4-8 Regenerative heat exchanger room and Regenerative heat exchanger valve room compartment Nodal Description 45
Table 4-9 Regenerative heat exchanger room and Regenerative heat exchanger valve room compartment Nodal Description 48
Table 4-10 Regenerative heat exchanger room and Regenerative heat exchanger valve room compartment Nodal Description 55
Table 4-11 Mass and Release Rates 58
Table 4-12 High energy pipes penetrating the Letdown heat exchanger room compartment 77
Table 4-13 Letdown heat exchanger room compartment Nodal Description 77
Table 4-14 Letdown heat exchanger room compartment Nodal Description 79
Table 4-15 Mass and Release Rates 80

List of Figures

Figure 4-1 Nodalization scheme of Regenerative heat exchanger room and Regenerative Heat exchanger valve room compartment..... 67
Figure 4-2 Nodalization scheme of Regenerative heat exchanger room and Regenerative Heat exchanger valve room compartment..... 68
Figure 4-3 Nodalization scheme of Regenerative heat exchanger room and Regenerative Heat exchanger valve room compartment..... 69
Figure 4-4 Nodalization diagram of Regenerative heat exchanger room and Regenerative Heat exchanger valve room compartment..... 70
Figure 4-5 Short term mass and energy release data for Charging line (4B) break (1/2)71
Figure 4-6 Short term mass and energy release data for Charging line (4B) break (2/2)71
Figure 4-7 Pressure transient at the peak pressure node (V6) for Charging line (4B) break in Regenerative Heat exchanger valve room compartment Nodal Description..... 72
Figure 4-8 Pressure transient at the peak pressure node (V25) for Charging line (4B) break in Regenerative Heat exchanger valve room compartment Nodal Description..... 72
Figure 4-9 Short term mass and energy release data for Letdown line (3B) break (1/2) 73
Figure 4-10 Short term mass and energy release data for Letdown line (3B) break (2/2) 73
Figure 4-11 Pressure transient at the peak pressure node (V20) for Letdown line (3B) break in Regenerative heat exchanger room compartment Nodal Description 74
Figure 4-12 Pressure transient at the peak pressure node (V25) for Letdown line (3B) break in Regenerative heat exchanger room valve compartment Nodal Description..... 74
Figure 4-13 Nodalization scheme of Letdown heat exchanger room compartment..... 89
Figure 4-14 Nodalization diagram of Letdown heat exchanger room compartment 90
Figure 4-15 Short term mass and energy release data for Letdown line (3B) break (1/2) 91
Figure 4-16 Short term mass and energy release data for Letdown line (3B) break (2/2) 91
Figure 4-17 Pressure transient at the peak pressure node (V2) for Letdown line (3B) break in Letdown heat exchanger room compartment..... 92

1. REEGENERATIVE HEAT EXCHANGER ROOM AND REGENERATIVE HEAT EXCHANGER VALVE ROOM COMPARTMENT

High energy pipes penetrating the regenerative heat exchanger room and regenerative heat exchanger valve room compartment are the letdown line and charging line as shown on Table 4-1.

1.1. MODELING

(a) Nodal description

The nodalization used for US-APWR regenerative heat exchanger room and regenerative heat exchanger valve room compartment is shown on Figure 4-1 to Figure 4-3 and Nodalization diagram is shown on Figure 4-4. A total 33 nodes, including the containment atmosphere node, are used for the regenerative heat exchanger room and regenerative heat exchanger valve room compartment analyses.

The description and geometric parameters for each node are summarized in Table 4-2, Table 4-4, Table 4-7 and Table 4-9. The free volume of each node was estimated by subtracting the obstructed volume from the room volume. The obstructed volume was estimated the volume of main components with margin to assure minimum free volume. This assumption generates conservative results.

(b) Vent path description

The vent path connection diagram is shown in Figure 4-4. Geometric and hydraulic parameters for each vent path are summarized in Table 4-3, Table 4-5, Table 4-8 and Table 4-10.

Vent paths P8, P22, P36 and P50 run from the regenerative heat exchanger room to the Corridor. Vent paths P53 runs from the regenerative heat exchanger valve room to the Corridor. Vent path P59 to P62 runs from the Corridor to containment atmosphere node.

The flow area of each vent path is conservatively estimated considering the flow obstruction by main components, including margin. The friction length is conservatively estimated considering the length of expected flow line plus margin. The loss coefficient is conservatively estimated considering the effect of obstruction, contraction and expansion.

1.2. SHORT TERM MASS AND ENERGY RELEASE DATA

The analysis of short term mass and energy release is performed using M-RELAP5 code which is also used for the small break LOCA analysis for the US-APWR. Nodalization of reactor coolant system for short term mass and energy release is same as the small break LOCA analysis.

(a) Charging line break

Break mass and energy flow is released from charging pump side and RCS (Reactor Coolant System) side. The mass and energy flow is most unlikely to occur at the RCS side because the break location is isolated from RCS by the isolation valve. Therefore, to calculate subcompartment analysis conservatively,

the break mass and energy flow on the same side as the charging pump was used.
For the charging pump side, the pressure at the break location will be less than the pressure at the outlet of charging pump due to the pressure drop at the piping elbows. The charging line between the charging pump and the break location is included in the model to account for the pressure drop in the charging line. The line to the inlet of the regenerative heat exchanger room was conservatively modeled as the end of charging line. And the loss coefficients for the elbows were conservatively assumed at minimum value. The initial pressure and temperature were conservatively set to the maximum values of pressure and temperature in the charging line.

The resultant short term mass and energy release data are shown in Table 4-6 and the transient of break mass flow rate and enthalpy are shown in Figure 4-5 to Figure 4-6.

(b) Letdown line break
Break mass and energy flow is released from the RCS cross-over leg side and CVCS (Chemical Volume Control System) side. The mass and energy flow is most unlikely to occur at the CVCS side because the temperature and pressure of CVCS are much lower than that of RCS. Therefore, to calculate subcompartment analysis conservatively, the break mass and energy flow on the same side as the cross-over leg was used.

For the cross-over leg side, the pressure at the break location will be less than the cross-over leg due to the pressure drop at the elbows. The letdown line between the cross-over leg and the break location is included in the model to account for the pressure drop in the letdown line. The line to the inlet of the regenerative heat exchanger room was conservatively modeled as the end of letdown line. And the loss coefficients for the elbows were conservatively assumed at minimum value. The initial pressure and temperature were conservatively set to the maximum values of pressure and temperature in the letdown line.

The resultant short term mass and energy release data are shown in Table 4-11 and the transient of break mass flow rate and enthalpy are shown in Figure 4-9 to Figure 4-10.

1.3. CALCULATED PRESSURE RESPONSES

(a)-1 Charging line break in Regenerative heat exchanger room
The subcompartment analysis of charging line break was analyzed in every node which the line passed through. The worst case for break location is in node V6. The calculated peak pressure was 4.3 psig at the break node V6. The pressure transient at V6 is shown in Figure 4-7. The design pressure for all nodes in pressurizer compartment is 10 psig and the calculated peak pressure is much less than the design pressure.

(a)-2 Charging line break in Regenerative heat exchanger valve room
The subcompartment analysis of charging line break was analyzed in every node which the line passed through. The worst case for break location is in node V27. The calculated peak pressure was 6.1 psig at the break node V25. The pressure

transient at V25 is shown in Figure 4-8. The design pressure for all nodes in pressurizer compartment is 16 psig and the calculated peak pressure is much less than the design pressure.

(b)-1 Letdown line break in Regenerative heat exchanger room

The subcompartment analysis of charging line break was analyzed in every node which the line passed through. The worst case for break location is in node V20. The calculated peak pressure was 3.2 psig at the break node V20. The pressure transient at V20 is shown in Figure 4-11. The design pressure for all nodes in pressurizer compartment is 10 psig and the calculated peak pressure is much less than the design pressure.

(b)-2 Letdown line break in Regenerative heat exchanger valve room

The subcompartment analysis of charging line break was analyzed in every node which the line passed through. The worst case for break location is in node V27. The calculated peak pressure was 10.6 psig at the break node V27. The pressure transient at V25 is shown in Figure 4-12. The design pressure for all nodes in pressurizer compartment is 16 psig and the calculated peak pressure is much less than the design pressure.

Table 4-1 High energy pipes penetrating the regenerative heat exchanger room and regenerative heat exchanger valve room compartment

Subcompartment	Line	Line Spec	LBB considerations
Regenerative heat exchanger room	Charging line	4-CS-2511R	Break
		4-CS-2561R	Break
	Letdown Line	3-CS-2561R	Break
Regenerative Heat exchanger valve room	Charging line	4-CS-2561R	Break
	Letdown Line	3-CS-2561R	Break
		3-CS-601R	Break

Table 4-2 Regenerative heat exchanger room and Regenerative heat exchanger valve room compartment Nodal Description

A. Break Type : Charging line (4B) guillotine break
Break Area : 0.06447 (ft^2)
Break location : Volume number 6

Volume No.	Description	Height (ft)	Free Volume (ft^3)	Initial Conditions			Calculated Peak Press. Diff. (psid)	Design Peak Press. Diff (psid)	Margin (%)
				Temp. (deg F)	Press. (psia)	Humid. (%)			
1	Enclosed area by regenerative Hx,support strcture, SE wall,and SW wall in regenerative Hx room:between EL 50'-2" and 53'-5.76"	3.31	77	120	14.396	0	1.80	10	455.6
2	Enclosed area by regenerative Hx,support strcture, NW wall,and SW wall in regenerative Hx room:between EL 50'-2" and 53'-5.76"	3.31	54	120	14.396	0	2.05	10	387.8

Table 4-2 Regenerative heat exchanger room and Regenerative heat exchanger valve room compartment Nodal Description

A. Break Type : Charging line (4B) guillotine break
Break Area : 0.06447 (ft^2)
Break location : Volume number 6

Volume No.	Description	Height (ft)	Free Volume (ft^3)	Initial Conditions			Calculated Peak Press. Diff. (psid)	Design Peak Press. Diff (psid)	Margin (%)
				Temp. (deg F)	Press. (psia)	Humid. (%)			
3	Enclosed area by regenerative Hx,support strcture, and SE wall in regenerative Hx room:between EL 50'-2" and 53'-5.76"	3.31	66	120	14.396	0	1.83	10	446.4
4	Enclosed area by regenerative Hx,support strcture, and NW wall in regenerative Hx room:between EL 50'-2" and 53'-5.76"	3.31	43	120	14.396	0	1.92	10	420.8
5	Enclosed area by regenerative Hx,support strcture, NE wall,and SE wall in regenerative Hx room:between EL 50'-2" and 53'-5.76"	3.31	98	120	14.396	0	3.22	10	210.6
6	Enclosed area by regenerative Hx,support strcture, NE wall,and NW wall in regenerative Hx room:between EL 50'-2" and 53'-5.76"	3.31	82	120	14.396	0	4.31	10	132.0

Table 4-2 Regenerative heat exchanger room and Regenerative heat exchanger valve room compartment Nodal Description

A. Break Type : Charging line (4B) guillotine break
Break Area : 0.06447 (ft^2)
Break location : Volume number 6

Volume No.	Description	Height (ft)	Free Volume (ft^3)	Initial Conditions			Calculated Peak Press. Diff. (psid)	Design Peak Press. Diff (psid)	Margin (%)
				Temp. (deg F)	Press. (psia)	Humid. (%)			
7	Enclosed area by regenerative Hx,support strcture, SE wall,and SW wall in regenerative Hx room:between EL 53'-5.76" and 57'-9.32"	4.30	100	120	14.396	0	1.86	10	437.6
8	Enclosed area by regenerative Hx,support strcture, NW wall,and SW wall in regenerative Hx room:between EL 53'-5.76" and 57'-9.32"	4.30	70	120	14.396	0	1.77	10	465.0
9	Enclosed area by regenerative Hx,support strcture, and SE wall in regenerative Hx room:between EL 53'-5.76" and 57'-9.32"	4.30	98	120	14.396	0	1.68	10	495.2
10	Enclosed area by regenerative Hx,support strcture, and NW wall in regenerative Hx room:between EL 53'-5.76" and 57'-9.32"	4.30	68	120	14.396	0	1.74	10	474.7

Table 4-2 Regenerative heat exchanger room and Regenerative heat exchanger valve room compartment Nodal Description

A. Break Type : Charging line (4B) guillotine break
Break Area : 0.06447 (ft^2)
Break location : Volume number 6

Volume No.	Description	Height (ft)	Free Volume (ft^3)	Initial Conditions			Calculated Peak Press. Diff. (psid)	Design Peak Press. Diff (psid)	Margin (%)
				Temp. (deg F)	Press. (psia)	Humid. (%)			
11	Enclosed area by regenerative Hx,support strcture, NE wall,and SE wall in regenerative Hx room:between EL 53'-5.76" and 57'-9.32"	4.30	127	120	14.396	0	2.34	10	327.4
12	Enclosed area by regenerative Hx,support strcture, NE wall,and NW wall in regenerative Hx room:between EL 53'-5.76" and 57'-9.32"	4.30	107	120	14.396	0	2.37	10	321.9
13	Enclosed area by regenerative Hx,support strcture, SE wall,and SW wall in regenerative Hx room:between EL 57'-9.32" and 62'-0.88"	4.29	100	120	14.396	0	1.99	10	402.5
14	Enclosed area by regenerative Hx,support strcture, NW wall,and SW wall in regenerative Hx room:between EL 57'-9.32" and 62'-0.88"	4.29	70	120	14.396	0	1.86	10	437.6

Table 4-2 Regenerative heat exchanger room and Regenerative heat exchanger valve room compartment Nodal Description

A. Break Type : Charging line (4B) guillotine break
Break Area : 0.06447 (ft^2)
Break location : Volume number 6

Volume No.	Description	Height (ft)	Free Volume (ft^3)	Initial Conditions			Calculated Peak Press. Diff. (psid)	Design Peak Press. Diff (psid)	Margin (%)
				Temp. (deg F)	Press. (psia)	Humid. (%)			
15	Enclosed area by regenerative Hx,support strcture, and SE wall in regenerative Hx room:between EL 57'-9.32" and 62'-0.88"	4.29	98	120	14.396	0	1.55	10	545.2
16	Enclosed area by regenerative Hx,support strcture, and NW wall in regenerative Hx room:between EL 57'-9.32" and 62'-0.88"	4.29	68	120	14.396	0	1.55	10	545.2
17	Enclosed area by regenerative Hx,support strcture, NE wall,and SE wall in regenerative Hx room:between EL 57'-9.32" and 62'-0.88"	4.29	127	120	14.396	0	1.68	10	495.2
18	Enclosed area by regenerative Hx,support strcture, NE wall,and NW wall in regenerative Hx room:between EL 57'-9.32" and 62'-0.88"	4.29	107	120	14.396	0	1.59	10	528.9

Table 4-2 Regenerative heat exchanger room and Regenerative heat exchanger valve room compartment Nodal Description

A. Break Type : Charging line (4B) guillotine break
Break Area : 0.06447 (ft^2)
Break location : Volume number 6

Volume No.	Description	Height (ft)	Free Volume (ft^3)	Initial Conditions			Calculated Peak Press. Diff. (psid)	Design Peak Press. Diff (psid)	Margin (%)
				Temp. (deg F)	Press. (psia)	Humid. (%)			
19	Enclosed area by regenerative Hx,support strcture, SE wall,and SW wall in regenerative Hx room:between EL 62'-0.88" and 66'-3"	4.18	99	120	14.396	0	2.15	10	365.1
20	Enclosed area by regenerative Hx,support strcture, NW wall,and SW wall in regenerative Hx room:between EL 62'-0.88" and 66'-3"	4.18	70	120	14.396	0	2.26	10	342.5
21	Enclosed area by regenerative Hx,support strcture, and SE wall in regenerative Hx room:between EL 62'-0.88" and 66'-3"	4.18	98	120	14.396	0	1.51	10	562.3
22	Enclosed area by regenerative Hx,support strcture, and NW wall in regenerative Hx room:between EL 62'-0.88" and 66'-3"	4.18	69	120	14.396	0	1.66	10	502.4

Table 4-2 Regenerative heat exchanger room and Regenerative heat exchanger valve room compartment Nodal Description

A. Break Type : Charging line (4B) guillotine break
Break Area : 0.06447 (ft^2)
Break location : Volume number 6

Volume No.	Description	Height (ft)	Free Volume (ft^3)	Initial Conditions			Calculated Peak Press. Diff. (psid)	Design Peak Press. Diff (psid)	Margin (%)
				Temp. (deg F)	Press. (psia)	Humid. (%)			
23	Enclosed area by regenerative Hx,support strcture, NE wall,and SE wall in regenerative Hx room:between EL 62'-0.88" and 66'-3"	4.18	126	120	14.396	0	1.54	10	549.4
24	Enclosed area by regenerative Hx,support strcture, NE wall,and NW wall in regenerative Hx room:between EL 62'-0.88" and 66'-3"	4.18	106	120	14.396	0	1.57	10	536.9
25	Southwest part of piping room divided into 3 parts	16.42	501	120	14.396	0	0.92	16	1639.1
26	Central part of piping room divided into 3 parts	16.42	501	120	14.396	0	0.84	16	1804.8
27	Northeast part of piping room divided into 3 parts	16.42	501	120	14.396	0	0.91	16	1658.2
28	Opening to piping room	6.58	22	120	14.396	0	0.83	16	1827.7
29	Corridor:between EL 50'-2" and 53'-5.76"	3.31	50	120	14.396	0	1.21	10	726.4
30	Corridor:between EL 53'-5.76" and 57'-9.32"	4.30	65	120	14.396	0	0.84	10	1090.5
31	Corridor:between EL 57'-9.32" and 62'-0.88"	4.29	65	120	14.396	0	0.81	10	1134.6

Table 4-2 Regenerative heat exchanger room and Regenerative heat exchanger valve room compartment Nodal Description

A. Break Type : Charging line (4B) guillotine break
Break Area : 0.06447 (ft^2)
Break location : Volume number 6

Volume No.	Description	Height (ft)	Free Volume (ft^3)	Initial Conditions			Calculated Peak Press. Diff. (psid)	Design Peak Press. Diff (psid)	Margin (%)
				Temp. (deg F)	Press. (psia)	Humid. (%)			
32	Corridor:between EL 62'-0.88" and 66'-3"	4.18	63	120	14.396	0	0.83	10	1104.8
33	Containment Building Free Volume	200	2740000	120	14.396	0			

Table 4-3 Regenerative heat exchanger room and Regenerative heat exchanger valve room compartment Nodal Description

A. Break Type : Charging line (4B) guillotine break
Break Area : 0.06447 (ft^2)
Break location : Volume number 6

Vent Path No.	Volume No.		Description of Vent Path Flow		Area (ft^2)	Inertia Length (ft)	Hydraulic Diameter (ft)	Friction Length (ft)	Loss Coefficient K			
	From	To	Choked	Unchoked					Turning and Obstruction	Expansion	Contraction	Total
1	V1	V2		X	15.38	3.55	3.35	4.26		1.0	0.5	1.5
2	V1	V3		X	11.23	5.89	3.09	7.07		1.0	0.5	1.5
3	V2	V4		X	7.22	5.89	2.67	7.07		1.0	0.5	1.5
4	V3	V4		X	10.50	3.55	2.73	4.26		1.0	0.5	1.5
5	V3	V5		X	11.23	6.47	3.09	7.76		1.0	0.5	1.5
6	V4	V6		X	7.22	7.35	2.67	8.82		1.0	0.5	1.5
7	V5	V6		X	25.45	3.73	4.2	4.48		1.0	0.5	1.5
8	V6	V29		X	6.63	7.5	2.49	9		0.0	0.5	0.5
9	V1	V7		X	20.96	3.81	4.19	4.57		1.0	0.5	1.5
10	V2	V8		X	14.03	3.81	3.18	4.57		1.0	0.5	1.5
11	V3	V9		X	19.26	3.81	4.2	4.57		1.0	0.5	1.5
12	V4	V10		X	12.30	3.81	3.08	4.57		1.0	0.5	1.5
13	V5	V11		X	27.26	3.81	4.47	4.57		1.0	0.5	1.5
14	V6	V12		X	22.60	3.81	3.85	4.57		1.0	0.5	1.5
15	V7	V8		X	18.60	3.55	3.66	4.26		1.0	0.5	1.5
16	V7	V9		X	16.56	5.89	4.11	7.07		1.0	0.5	1.5
17	V8	V10		X	11.50	5.89	3.34	7.07		1.0	0.5	1.5
18	V9	V10		X	15.11	3.55	3.57	4.26		1.0	0.5	1.5
19	V9	V11		X	16.56	6.47	4.11	7.76		1.0	0.5	1.5
20	V10	V12		X	11.50	7.35	3.34	8.82		1.0	0.5	1.5
21	V11	V12		X	31.06	3.73	4.74	4.48		1.0	0.5	1.5
22	V12	V30		X	8.59	7.5	2.73	9		0.0	0.5	0.5

Table 4-3 Regenerative heat exchanger room and Regenerative heat exchanger valve room compartment Nodal Description

A. Break Type : Charging line (4B) guillotine break
Break Area : 0.06447 (ft^2)
Break location : Volume number 6

Vent Path No.	Volume No.		Description of Vent Path Flow		Area (ft^2)	Inertia Length (ft)	Hydraulic Diameter (ft)	Friction Length (ft)	Loss Coefficient K			
	From	To	Choked	Unchoked					Turning and Obstruction	Expansion	Contraction	Total
23	V7	V13		X	12.58	2.62	4.19	10.94		1.0	0.5	1.5
24	V8	V14		X	8.42	2.62	3.18	9.52		1.0	0.5	1.5
25	V9	V15		X	11.56	2.62	4.2	10.96		1.0	0.5	1.5
26	V10	V16		X	7.38	2.62	3.08	9.38		1.0	0.5	1.5
27	V11	V17		X	16.36	2.62	4.47	11.34		1.0	0.5	1.5
28	V12	V18		X	13.56	2.62	3.85	10.46		1.0	0.5	1.5
29	V13	V14		X	18.60	3.55	3.66	4.26		1.0	0.5	1.5
30	V13	V15		X	16.56	5.89	4.11	7.07		1.0	0.5	1.5
31	V14	V16		X	11.50	5.89	3.34	7.07		1.0	0.5	1.5
32	V15	V16		X	15.11	3.55	3.57	4.26		1.0	0.5	1.5
33	V15	V17		X	16.56	6.47	4.11	7.76		1.0	0.5	1.5
34	V16	V18		X	11.50	7.35	3.34	8.82		1.0	0.5	1.5
35	V17	V18		X	31.06	3.73	4.74	4.48		1.0	0.5	1.5
36	V18	V31		X	8.59	7.5	2.73	9		0.0	0.5	0.5
37	V13	V19		X	20.96	4.24	4.19	5.09		1.0	0.5	1.5
38	V14	V20		X	14.03	4.24	3.18	5.09		1.0	0.5	1.5
39	V15	V21		X	19.26	4.24	4.2	5.09		1.0	0.5	1.5
40	V16	V22		X	12.30	4.24	3.08	5.09		1.0	0.5	1.5
41	V17	V23		X	27.26	4.24	4.47	5.09		1.0	0.5	1.5
42	V18	V24		X	22.60	4.24	3.85	5.09		1.0	0.5	1.5
43	V19	V20		X	21.23	3.55	4.22	4.26		1.0	0.5	1.5
44	V19	V21		X	16.66	5.89	4.1	7.07		1.0	0.5	1.5
45	V20	V22		X	11.74	5.89	3.38	7.07		1.0	0.5	1.5

Table 4-3 Regenerative heat exchanger room and Regenerative heat exchanger valve room compartment Nodal Description

A. Break Type : Charging line (4B) guillotine break
Break Area : 0.06447 (ft^2)
Break location : Volume number 6

Vent Path No.	Volume No.		Description of Vent Path Flow		Area (ft^2)	Inertia Length (ft)	Hydraulic Diameter (ft)	Friction Length (ft)	Loss Coefficient K			
	From	To	Choked	Unchoked					Turning and Obstruction	Expansion	Contraction	Total
46	V21	V22		X	19.53	3.55	4.24	4.26		1.0	0.5	1.5
47	V21	V23		X	16.66	6.47	4.1	7.76		1.0	0.5	1.5
48	V22	V24		X	11.74	7.35	3.38	8.82		1.0	0.5	1.5
49	V23	V24		X	33.37	3.73	5.14	4.48		1.0	0.5	1.5
50	V24	V32		X	8.35	7.5	2.7	9		0.0	0.5	0.5
51	V25	V26		X	91.66	5.76	8.33	6.91		0.0	0.0	0.0
52	V26	V27		X	91.66	5.76	8.33	6.91		0.0	0.0	0.0
53	V27	V28		X	13.17	3.92	3.07	4.7		0.0	0.5	0.5
54	V28	V29		X	6.63	2.22	2.49	2.66	1.74	1.0	0.0	2.74
55	V28	V30		X	6.54	2.22	2.48	2.66	1.74	1.0	0.0	2.74
56	V29	V30		X	15.17	3.81	3.17	4.57		0.0	0.0	0.0
57	V30	V31		X	15.17	4.3	3.17	5.16		0.0	0.0	0.0
58	V31	V32		X	15.17	4.24	3.17	5.09		0.0	0.0	0.0
59	V29	V33		X	6.63	3.79	2.49	4.55		1.0	0.0	1.0
60	V30	V33		X	8.59	3.79	2.73	4.55		1.0	0.0	1.0
61	V31	V33		X	8.59	3.79	2.73	4.55		1.0	0.0	1.0
62	V32	V33		X	8.35	3.79	2.7	4.55		1.0	0.0	1.0

Table 4-4 Regenerative heat exchanger room and Regenerative heat exchanger valve room compartment Nodal Description

B. Break Type : Charging line (4B) guillotine break
Break Area : 0.06447 (ft^2)
Break location : Volume number 27

Volume No.	Description	Height (ft)	Free Volume (ft^3)	Initial Conditions			Calculated Peak Press. Diff. (psid)	Design Peak Press. Diff (psid)	Margin (%)
				Temp. (deg F)	Press. (psia)	Humid. (%)			
1	Enclosed area by regenerative Hx,support strcture, SE wall,and SW wall in regenerative Hx room:between EL 50'-2" and 53'-5.76"	3.31	77	120	14.396	0	0.45	10	2122.2
2	Enclosed area by regenerative Hx,support strcture, NW wall,and SW wall in regenerative Hx room:between EL 50'-2" and 53'-5.76"	3.31	54	120	14.396	0	0.45	10	2122.2
3	Enclosed area by regenerative Hx,support strcture, and SE wall in regenerative Hx room:between EL 50'-2" and 53'-5.76"	3.31	66	120	14.396	0	0.44	10	2172.7
4	Enclosed area by regenerative Hx,support strcture, and NW wall in regenerative Hx room:between EL 50'-2" and 53'-5.76"	3.31	43	120	14.396	0	0.44	10	2172.7

Table 4-4 Regenerative heat exchanger room and Regenerative heat exchanger valve room compartment Nodal Description

B. Break Type : Charging line (4B) guillotine break
Break Area : 0.06447 (ft^2)
Break location : Volume number 27

Volume No.	Description	Height (ft)	Free Volume (ft^3)	Initial Conditions			Calculated Peak Press. Diff. (psid)	Design Peak Press. Diff (psid)	Margin (%)
				Temp. (deg F)	Press. (psia)	Humid. (%)			
5	Enclosed area by regenerative Hx,support strcture, NE wall,and SE wall in regenerative Hx room:between EL 50'-2" and 53'-5.76"	3.31	98	120	14.396	0	0.44	10	2172.7
6	Enclosed area by regenerative Hx,support strcture, NE wall,and NW wall in regenerative Hx room:between EL 50'-2" and 53'-5.76"	3.31	82	120	14.396	0	0.44	10	2172.7
7	Enclosed area by regenerative Hx,support strcture, SE wall,and SW wall in regenerative Hx room:between EL 53'-5.76" and 57'-9.32"	4.30	100	120	14.396	0	0.44	10	2172.7
8	Enclosed area by regenerative Hx,support strcture, NW wall,and SW wall in regenerative Hx room:between EL 53'-5.76" and 57'-9.32"	4.30	70	120	14.396	0	0.44	10	2172.7

Table 4-4 Regenerative heat exchanger room and Regenerative heat exchanger valve room compartment Nodal Description

B. Break Type : Charging line (4B) guillotine break
Break Area : 0.06447 (ft^2)
Break location : Volume number 27

Volume No.	Description	Height (ft)	Free Volume (ft^3)	Initial Conditions			Calculated Peak Press. Diff. (psid)	Design Peak Press. Diff (psid)	Margin (%)
				Temp. (deg F)	Press. (psia)	Humid. (%)			
9	Enclosed area by regenerative Hx,support strcture, and SE wall in regenerative Hx room:between EL 53'-5.76" and 57'-9.32"	4.30	98	120	14.396	0	0.43	10	2225.6
10	Enclosed area by regenerative Hx,support strcture, and NW wall in regenerative Hx room:between EL 53'-5.76" and 57'-9.32"	4.30	68	120	14.396	0	0.43	10	2225.6
11	Enclosed area by regenerative Hx,support strcture, NE wall,and SE wall in regenerative Hx room:between EL 53'-5.76" and 57'-9.32"	4.30	127	120	14.396	0	0.43	10	2225.6
12	Enclosed area by regenerative Hx,support strcture, NE wall,and NW wall in regenerative Hx room:between EL 53'-5.76" and 57'-9.32"	4.30	107	120	14.396	0	0.45	10	2122.2

Table 4-4 Regenerative heat exchanger room and Regenerative heat exchanger valve room compartment Nodal Description

B. Break Type : Charging line (4B) guillotine break
Break Area : 0.06447 (ft^2)
Break location : Volume number 27

Volume No.	Description	Height (ft)	Free Volume (ft^3)	Initial Conditions			Calculated Peak Press. Diff. (psid)	Design Peak Press. Diff (psid)	Margin (%)
				Temp. (deg F)	Press. (psia)	Humid. (%)			
13	Enclosed area by regenerative Hx,support strcture, SE wall,and SW wall in regenerative Hx room:between EL 57'-9.32" and 62'-0.88"	4.29	100	120	14.396	0	0.44	10	2172.7
14	Enclosed area by regenerative Hx,support strcture, NW wall,and SW wall in regenerative Hx room:between EL 57'-9.32" and 62'-0.88"	4.29	70	120	14.396	0	0.44	10	2172.7
15	Enclosed area by regenerative Hx,support strcture, and SE wall in regenerative Hx room:between EL 57'-9.32" and 62'-0.88"	4.29	98	120	14.396	0	0.43	10	2225.6
16	Enclosed area by regenerative Hx,support strcture, and NW wall in regenerative Hx room:between EL 57'-9.32" and 62'-0.88"	4.29	68	120	14.396	0	0.43	10	2225.6

Table 4-4 Regenerative heat exchanger room and Regenerative heat exchanger valve room compartment Nodal Description

B. Break Type : Charging line (4B) guillotine break
Break Area : 0.06447 (ft^2)
Break location : Volume number 27

Volume No.	Description	Height (ft)	Free Volume (ft^3)	Initial Conditions			Calculated Peak Press. Diff. (psid)	Design Peak Press. Diff (psid)	Margin (%)
				Temp. (deg F)	Press. (psia)	Humid. (%)			
17	Enclosed area by regenerative Hx,support strcture, NE wall,and SE wall in regenerative Hx room:between EL 57'-9.32" and 62'-0.88"	4.29	127	120	14.396	0	0.43	10	2225.6
18	Enclosed area by regenerative Hx,support strcture, NE wall,and NW wall in regenerative Hx room:between EL 57'-9.32" and 62'-0.88"	4.29	107	120	14.396	0	0.42	10	2281.0
19	Enclosed area by regenerative Hx,support strcture, SE wall,and SW wall in regenerative Hx room:between EL 62'-0.88" and 66'-3"	4.18	99	120	14.396	0	0.47	10	2027.7
20	Enclosed area by regenerative Hx,support strcture, NW wall,and SW wall in regenerative Hx room:between EL 62'-0.88" and 66'-3"	4.18	70	120	14.396	0	0.48	10	1983.3

Table 4-4 Regenerative heat exchanger room and Regenerative heat exchanger valve room compartment Nodal Description

B. Break Type : Charging line (4B) guillotine break
Break Area : 0.06447 (ft^2)
Break location : Volume number 27

Volume No.	Description	Height (ft)	Free Volume (ft^3)	Initial Conditions			Calculated Peak Press. Diff. (psid)	Design Peak Press. Diff (psid)	Margin (%)
				Temp. (deg F)	Press. (psia)	Humid. (%)			
21	Enclosed area by regenerative Hx,support strcture, and SE wall in regenerative Hx room:between EL 62'-0.88" and 66'-3"	4.18	98	120	14.396	0	0.44	10	2172.7
22	Enclosed area by regenerative Hx,support strcture, and NW wall in regenerative Hx room:between EL 62'-0.88" and 66'-3"	4.18	69	120	14.396	0	0.44	10	2172.7
23	Enclosed area by regenerative Hx,support strcture, NE wall,and SE wall in regenerative Hx room:between EL 62'-0.88" and 66'-3"	4.18	126	120	14.396	0	0.43	10	2225.6
24	Enclosed area by regenerative Hx,support strcture, NE wall,and NW wall in regenerative Hx room:between EL 62'-0.88" and 66'-3"	4.18	106	120	14.396	0	0.42	10	2281.0
25	Southwest part of piping room divided into 3 parts	16.42	501	120	14.396	0	6.12	16	161.4

Table 4-4 Regenerative heat exchanger room and Regenerative heat exchanger valve room compartment Nodal Description

B. Break Type : Charging line (4B) guillotine break
Break Area : 0.06447 (ft^2)
Break location : Volume number 27

Volume No.	Description	Height (ft)	Free Volume (ft^3)	Initial Conditions			Calculated Peak Press. Diff. (psid)	Design Peak Press. Diff (psid)	Margin (%)
				Temp. (deg F)	Press. (psia)	Humid. (%)			
26	Central part of piping room divided into 3 parts	16.42	501	120	14.396	0	6.12	16	161.4
27	Northeast part of piping room divided into 3 parts	16.42	501	120	14.396	0	6.12	16	161.4
28	Opening to piping room	6.58	22	120	14.396	0	5.29	16	202.5
29	Corridor:between EL 50'-2" and 53'-5.76"	3.31	50	120	14.396	0	0.84	10	1090.5
30	Corridor:between EL 53'-5.76" and 57'-9.32"	4.30	65	120	14.396	0	0.66	10	1415.2
31	Corridor:between EL 57'-9.32" and 62'-0.88"	4.29	65	120	14.396	0	0.40	10	2400.0
32	Corridor:between EL 62'-0.88" and 66'-3"	4.18	63	120	14.396	0	0.55	10	1718.2
33	Containment Building Free Volume	200	2740000	120	14.396	0			

Table 4-5 Regenerative heat exchanger room and Regenerative heat exchanger valve room compartment Nodal Description

B. Break Type : Charging line (4B) guillotine break
Break Area : 0.06447 (ft^2)
Break location : Volume number 27

Vent Path No.	Volume No.		Description of Vent Path Flow		Area (ft^2)	Inertia Length (ft)	Hydraulic Diameter (ft)	Friction Length (ft)	Loss Coefficient K			
	From	To	Choked	Unchoked					Turning and Obstruction	Expansion	Contraction	Total
1	V1	V2		X	15.38	3.55	3.35	4.26		1.0	0.5	1.5
2	V1	V3		X	11.23	5.89	3.09	7.07		1.0	0.5	1.5
3	V2	V4		X	7.22	5.89	2.67	7.07		1.0	0.5	1.5
4	V3	V4		X	10.50	3.55	2.73	4.26		1.0	0.5	1.5
5	V3	V5		X	11.23	6.47	3.09	7.76		1.0	0.5	1.5
6	V4	V6		X	7.22	7.35	2.67	8.82		1.0	0.5	1.5
7	V5	V6		X	25.45	3.73	4.2	4.48		1.0	0.5	1.5
8	V6	V29		X	6.63	7.5	2.49	9		0.0	0.5	0.5
9	V1	V7		X	20.96	3.81	4.19	4.57		1.0	0.5	1.5
10	V2	V8		X	14.03	3.81	3.18	4.57		1.0	0.5	1.5
11	V3	V9		X	19.26	3.81	4.2	4.57		1.0	0.5	1.5
12	V4	V10		X	12.30	3.81	3.08	4.57		1.0	0.5	1.5
13	V5	V11		X	27.26	3.81	4.47	4.57		1.0	0.5	1.5
14	V6	V12		X	22.60	3.81	3.85	4.57		1.0	0.5	1.5
15	V7	V8		X	18.60	3.55	3.66	4.26		1.0	0.5	1.5
16	V7	V9		X	16.56	5.89	4.11	7.07		1.0	0.5	1.5
17	V8	V10		X	11.50	5.89	3.34	7.07		1.0	0.5	1.5
18	V9	V10		X	15.11	3.55	3.57	4.26		1.0	0.5	1.5
19	V9	V11		X	16.56	6.47	4.11	7.76		1.0	0.5	1.5
20	V10	V12		X	11.50	7.35	3.34	8.82		1.0	0.5	1.5
21	V11	V12		X	31.06	3.73	4.74	4.48		1.0	0.5	1.5
22	V12	V30		X	8.59	7.5	2.73	9		0.0	0.5	0.5

Table 4-5 Regenerative heat exchanger room and Regenerative heat exchanger valve room compartment Nodal Description

B. Break Type : Charging line (4B) guillotine break
Break Area : 0.06447 (ft^2)
Break location : Volume number 27

Vent Path No.	Volume No.		Description of Vent Path Flow		Area (ft^2)	Inertia Length (ft)	Hydraulic Diameter (ft)	Friction Length (ft)	Loss Coefficient K			
	From	To	Choked	Unchoked					Turning and Obstruction	Expansion	Contraction	Total
23	V7	V13		X	12.58	2.62	4.19	10.94		1.0	0.5	1.5
24	V8	V14		X	8.42	2.62	3.18	9.52		1.0	0.5	1.5
25	V9	V15		X	11.56	2.62	4.2	10.96		1.0	0.5	1.5
26	V10	V16		X	7.38	2.62	3.08	9.38		1.0	0.5	1.5
27	V11	V17		X	16.36	2.62	4.47	11.34		1.0	0.5	1.5
28	V12	V18		X	13.56	2.62	3.85	10.46		1.0	0.5	1.5
29	V13	V14		X	18.60	3.55	3.66	4.26		1.0	0.5	1.5
30	V13	V15		X	16.56	5.89	4.11	7.07		1.0	0.5	1.5
31	V14	V16		X	11.50	5.89	3.34	7.07		1.0	0.5	1.5
32	V15	V16		X	15.11	3.55	3.57	4.26		1.0	0.5	1.5
33	V15	V17		X	16.56	6.47	4.11	7.76		1.0	0.5	1.5
34	V16	V18		X	11.50	7.35	3.34	8.82		1.0	0.5	1.5
35	V17	V18		X	31.06	3.73	4.74	4.48		1.0	0.5	1.5
36	V18	V31		X	8.59	7.5	2.73	9		0.0	0.5	0.5
37	V13	V19		X	20.96	4.24	4.19	5.09		1.0	0.5	1.5
38	V14	V20		X	14.03	4.24	3.18	5.09		1.0	0.5	1.5
39	V15	V21		X	19.26	4.24	4.2	5.09		1.0	0.5	1.5
40	V16	V22		X	12.30	4.24	3.08	5.09		1.0	0.5	1.5
41	V17	V23		X	27.26	4.24	4.47	5.09		1.0	0.5	1.5
42	V18	V24		X	22.60	4.24	3.85	5.09		1.0	0.5	1.5
43	V19	V20		X	21.23	3.55	4.22	4.26		1.0	0.5	1.5
44	V19	V21		X	16.66	5.89	4.1	7.07		1.0	0.5	1.5
45	V20	V22		X	11.74	5.89	3.38	7.07		1.0	0.5	1.5

Table 4-5 Regenerative heat exchanger room and Regenerative heat exchanger valve room compartment Nodal Description

B. Break Type : Charging line (4B) guillotine break
Break Area : 0.06447 (ft^2)
Break location : Volume number 27

Vent Path No.	Volume No.		Description of Vent Path Flow		Area (ft^2)	Inertia Length (ft)	Hydraulic Diameter (ft)	Friction Length (ft)	Loss Coefficient K			
	From	To	Choked	Unchoked					Turning and Obstruction	Expansion	Contraction	Total
46	V21	V22		X	19.53	3.55	4.24	4.26		1.0	0.5	1.5
47	V21	V23		X	16.66	6.47	4.1	7.76		1.0	0.5	1.5
48	V22	V24		X	11.74	7.35	3.38	8.82		1.0	0.5	1.5
49	V23	V24		X	33.37	3.73	5.14	4.48		1.0	0.5	1.5
50	V24	V32		X	8.35	7.5	2.7	9		0.0	0.5	0.5
51	V25	V26		X	91.66	5.76	8.33	6.91		0.0	0.0	0.0
52	V26	V27		X	91.66	5.76	8.33	6.91		0.0	0.0	0.0
53	V27	V28		X	13.17	3.92	3.07	4.7		0.0	0.5	0.5
54	V28	V29		X	6.63	2.22	2.49	2.66	0.64	2.1	0.0	2.74
55	V28	V30		X	6.54	2.22	2.48	2.66	0.64	2.1	0.0	2.74
56	V29	V30		X	15.17	3.81	3.17	4.57		0.0	0.0	0.0
57	V30	V31		X	15.17	4.3	3.17	5.16		0.0	0.0	0.0
58	V31	V32		X	15.17	4.24	3.17	5.09		0.0	0.0	0.0
59	V29	V33		X	6.63	3.79	2.49	4.55		1.0	0.0	1.0
60	V30	V33		X	8.59	3.79	2.73	4.55		1.0	0.0	1.0
61	V31	V33		X	8.59	3.79	2.73	4.55		1.0	0.0	1.0
62	V32	V33		X	8.35	3.79	2.7	4.55		1.0	0.0	1.0

Table 4-6 Mass and Release Rates

A. Break Type : Charging line (4B) guillotine break
Break Area : 0.06447(ft^2)
Break location : Volume number 6, 27

*Mass Release Rate was doubled from the following value for guillotine break.

Time (s)	Mass Release Rate* (lbm/s)	Enthalpy (BTU/lbm)
0	0	552.4
0.001	502.308	545.918
0.002	427.514	545.601
0.003	398.64	550.284
0.004	388.332	548.444
0.005	407.039	546.21
0.006	408.543	545.285
0.007	389.408	544.852
0.008	369.684	544.768
0.009	363.476	545.94
0.01	359.535	546.278
0.011	363.639	545.974
0.012	371.567	545.344
0.013	378.689	545.06
0.014	381.181	545.174
0.015	377.516	545.593
0.016	368.793	545.853
0.017	360.006	545.728
0.018	353.557	545.428
0.019	356.957	545.916
0.02	351.99	545.202
0.021	354.438	544.812
0.022	357.059	544.526
0.023	360.273	544.322
0.024	363.751	544.201
0.025	366.757	544.245
0.026	369.019	544.344
0.027	370.306	544.492
0.028	370.353	544.697
0.029	369.156	544.955
0.03	366.865	545.246
0.031	363.725	545.499
0.032	360.119	545.644
0.033	356.296	545.727
0.034	352.956	545.718
0.035	350.406	545.622
0.036	348.709	545.452
0.037	347.798	545.231
0.038	347.554	544.984
0.039	347.817	544.737

Table 4-6 Mass and Release Rates

A. Break Type : Charging line (4B) guillotine break
Break Area : 0.06447(ft^2)
Break location : Volume number 6, 27

*Mass Release Rate was doubled from the following value for guillotine break.

Time (s)	Mass Release Rate* (lbm/s)	Enthalpy (BTU/lbm)
0.04	348.38	544.515
0.041	349.036	544.334
0.042	349.6	544.205
0.043	349.925	544.137
0.044	349.901	544.135
0.045	349.463	544.199
0.046	348.573	544.327
0.047	348.14	545.361
0.048	348.112	545.26
0.049	346.23	545.34
0.05	344.011	545.519
0.051	342.69	546.833
0.052	340.819	546.575
0.053	338.506	546.523
0.054	340.467	547.907
0.055	336.246	547.239
0.056	335.566	546.936
0.057	334.713	546.683
0.058	334.445	546.464
0.059	334.422	546.236
0.06	334.706	545.987
0.061	335.326	545.724
0.062	336.208	545.455
0.063	337.248	545.187
0.064	338.347	544.931
0.065	339.418	544.693
0.066	340.382	544.482
0.067	341.182	544.302
0.068	341.773	544.158
0.069	342.128	544.051
0.07	342.235	543.982
0.071	342.094	543.949
0.072	341.713	543.95
0.073	341.11	543.982
0.074	340.311	544.041
0.075	339.347	544.122
0.076	338.255	544.221
0.077	337.079	544.333
0.078	335.859	544.452
0.079	335.796	545.562
0.08	336.241	545.28

Table 4-6 Mass and Release Rates

A. Break Type : Charging line (4B) guillotine break
Break Area : 0.06447(ft^2)
Break location : Volume number 6, 27

*Mass Release Rate was doubled from the following value for guillotine break.

Time (s)	Mass Release Rate* (lbm/s)	Enthalpy (BTU/lbm)
0.081	335.474	545.139
0.082	334.869	545.1
0.083	334.125	545.089
0.084	333.465	545.073
0.085	333.086	545.045
0.086	333.02	544.994
0.087	333.269	544.915
0.088	333.83	544.805
0.089	334.697	544.666
0.09	335.849	544.502
0.091	337.257	544.321
0.092	338.878	544.128
0.093	340.663	543.931
0.094	342.557	543.735
0.095	344.504	543.546
0.096	346.449	543.37
0.097	348.298	543.248
0.098	350.06	543.141
0.099	351.759	543.039
0.1	353.314	542.953
0.101	354.685	542.887
0.102	355.844	542.844
0.103	356.782	542.823
0.104	357.496	542.824
0.105	357.993	542.844
0.106	358.284	542.882
0.107	358.384	542.934
0.108	358.309	542.998
0.109	358.078	543.072
0.11	357.708	543.154
0.111	357.219	543.241
0.112	356.627	543.331
0.113	355.95	543.422
0.114	355.205	543.513
0.115	354.407	543.602
0.116	353.577	543.687
0.117	352.735	543.767
0.118	351.893	543.843
0.119	351.066	543.912
0.12	350.265	543.976
0.121	349.497	544.033

Table 4-6 Mass and Release Rates

A. Break Type : Charging line (4B) guillotine break
Break Area : 0.06447(ft^2)
Break location : Volume number 6, 27

*Mass Release Rate was doubled from the following value for guillotine break.

Time (s)	Mass Release Rate* (lbm/s)	Enthalpy (BTU/lbm)
0.122	348.77	544.083
0.123	348.086	544.128
0.124	347.448	544.166
0.125	346.868	544.183
0.126	346.379	544.177
0.127	345.863	544.184
0.128	345.367	544.196
0.129	344.902	544.209
0.13	344.477	544.22
0.131	344.096	544.229
0.132	343.758	544.236
0.133	343.461	544.24
0.134	343.201	544.243
0.135	342.978	544.243
0.136	342.787	544.242
0.137	342.625	544.24
0.138	342.491	544.237
0.139	342.38	544.232
0.14	342.289	544.227
0.141	342.216	544.221
0.142	342.155	544.214
0.143	342.105	544.207
0.144	342.062	544.201
0.145	342.021	544.194
0.146	341.982	544.188
0.147	341.939	544.182
0.148	341.892	544.178
0.149	341.837	544.174
0.15	341.772	544.171
0.151	341.696	544.169
0.152	341.608	544.169
0.153	341.506	544.169
0.154	341.39	544.172
0.155	341.26	544.175
0.156	341.115	544.18
0.157	340.955	544.186
0.158	340.782	544.193
0.159	340.597	544.201
0.16	340.399	544.21
0.161	340.191	544.22
0.162	339.973	544.231

Table 4-6 Mass and Release Rates

A. Break Type : Charging line (4B) guillotine break
Break Area : 0.06447(ft^2)
Break location : Volume number 6, 27

*Mass Release Rate was doubled from the following value for guillotine break.

Time (s)	Mass Release Rate* (lbm/s)	Enthalpy (BTU/lbm)
0.163	339.747	544.242
0.164	339.515	544.253
0.165	339.278	544.265
0.166	339.037	544.276
0.167	338.794	544.288
0.168	338.55	544.3
0.169	338.307	544.311
0.17	338.066	544.321
0.171	337.829	544.332
0.172	337.595	544.341
0.173	337.367	544.35
0.174	337.144	544.358
0.175	336.929	544.365
0.176	336.72	544.371
0.177	336.52	544.377
0.178	336.327	544.381
0.179	336.143	544.385
0.18	335.966	544.388
0.181	335.798	544.389
0.182	335.637	544.39
0.183	335.484	544.391
0.184	335.338	544.39
0.185	335.199	544.389
0.186	335.067	544.387
0.187	334.94	544.385
0.188	334.818	544.383
0.189	334.7	544.38
0.19	334.586	544.377
0.191	334.474	544.375
0.192	334.362	544.372
0.193	334.251	544.37
0.194	334.138	544.367
0.195	334.022	544.366
0.196	333.902	544.365
0.197	333.777	544.365
0.198	333.647	544.365
0.199	333.509	544.366
0.2	333.364	544.369
0.205	332.522	544.391
0.21	331.433	544.438
0.215	330.149	544.504

Table 4-6 Mass and Release Rates

A. Break Type : Charging line (4B) guillotine break
Break Area : 0.06447(ft^2)
Break location : Volume number 6, 27

*Mass Release Rate was doubled from the following value for guillotine break.

Time (s)	Mass Release Rate* (lbm/s)	Enthalpy (BTU/lbm)
0.22	328.691	544.571
0.225	327.164	544.625
0.23	325.69	544.656
0.235	324.291	544.667
0.24	322.931	544.67
0.245	321.594	544.671
0.25	320.294	544.674
0.255	319.058	544.677
0.26	317.915	544.674
0.265	316.878	544.665
0.27	315.943	544.649
0.275	315.092	544.627
0.28	314.3	544.604
0.285	313.536	544.582
0.29	312.815	544.534
0.295	310.93	544.42
0.3	309.129	544.349
0.305	307.989	544.341
0.31	307.171	544.375
0.315	306.468	544.412
0.32	305.777	544.444
0.325	305.093	544.471
0.33	304.421	544.497
0.335	303.766	544.522
0.34	303.13	544.546
0.345	302.511	544.568
0.35	301.9	544.59
0.355	301.29	544.612
0.36	300.678	544.633
0.365	300.067	544.654
0.37	299.461	544.674
0.375	298.866	544.693
0.38	298.292	544.709
0.385	297.745	544.721
0.39	297.236	544.729
0.395	296.771	544.731
0.4	296.353	544.726
0.405	295.981	544.714
0.41	295.646	544.693
0.415	295.348	544.664
0.42	295.098	544.625

Table 4-6 Mass and Release Rates

A. Break Type : Charging line (4B) guillotine break
Break Area : 0.06447(ft^2)
Break location : Volume number 6, 27

*Mass Release Rate was doubled from the following value for guillotine break.

Time (s)	Mass Release Rate* (lbm/s)	Enthalpy (BTU/lbm)
0.425	294.9	544.577
0.43	294.759	544.519
0.435	294.672	544.453
0.44	294.63	544.383
0.445	294.614	544.311
0.45	294.608	544.242
0.455	294.596	544.179
0.46	294.568	544.123
0.465	294.52	544.074
0.47	294.448	544.033
0.475	294.351	544
0.48	294.228	543.972
0.485	294.081	543.95
0.49	293.91	543.933
0.495	293.715	543.92
0.5	293.496	543.912
0.6	287	544
0.7	281.637	543.711
0.8	276.549	543.687
0.9	267.485	542.984
1	263.728	543.02
1.1	260.031	543.03
1.2	256.904	542.912
1.3	250.936	542.588
1.4	248.705	542.489
1.5	246.273	542.451
1.6	243.853	542.459
1.7	241.564	542.443
1.8	238.382	542.145
1.9	236.537	542.118
2	234.784	542.098
2.1	233.01	542.082
2.2	231.453	541.994
2.3	229.993	541.932
2.4	231.351	539.327
2.5	226.348	541.811
2.6	225.067	541.733
2.7	223.907	541.652
2.8	222.84	541.585
2.9	221.713	541.559
3	220.67	541.525

Table 4-6 Mass and Release Rates

A. Break Type : Charging line (4B) guillotine break
Break Area : 0.06447(ft^2)
Break location : Volume number 6, 27

*Mass Release Rate was doubled from the following value for guillotine break.

Time (s)	Mass Release Rate* (lbm/s)	Enthalpy (BTU/lbm)
3.1	219.624	541.483
3.2	218.677	541.419
3.3	217.863	541.34
3.4	216.978	541.308
3.5	216.106	541.283
3.6	215.311	541.242
3.7	214.476	541.205
3.8	221.598	535.626
3.9	212.845	540.71
4	211.62	540.952
4.1	210.896	540.925
4.2	210.251	540.889
4.3	209.661	540.85
4.4	209.081	540.814
4.5	208.529	540.782
4.6	207.99	540.749
4.7	207.489	540.715
4.8	207.014	540.682
4.9	206.532	540.656
5	206.046	540.636
5.1	205.572	540.615
5.2	205.125	540.589
5.3	204.702	540.563
5.4	204.32	540.529
5.5	203.918	540.505
5.6	203.525	540.48
5.7	203.15	540.452
5.8	202.779	540.429
5.9	202.414	540.408
6	202.057	540.387
6.1	201.709	540.367
6.2	201.369	540.347
6.3	201.017	540.33
6.4	200.69	540.314
6.5	200.389	540.29
6.6	200.076	540.274
6.7	199.763	540.26
6.8	199.476	540.236
6.9	199.203	540.209
7	198.932	540.188
7.1	198.664	540.17

Table 4-6 Mass and Release Rates

A. Break Type : Charging line (4B) guillotine break
Break Area : 0.06447(ft^2)
Break location : Volume number 6, 27

*Mass Release Rate was doubled from the following value for guillotine break.

Time (s)	Mass Release Rate* (lbm/s)	Enthalpy (BTU/lbm)
7.2	198.4	540.153
7.3	198.143	540.136
7.4	197.892	540.119
7.5	197.646	540.103
7.6	197.39	540.089
7.7	197.153	540.077
7.8	196.945	540.053
7.9	196.732	540.037
8	196.514	540.026
8.1	196.301	540.016
8.2	196.091	540.003
8.3	195.893	539.987
8.4	195.71	539.966
8.5	195.532	539.947
8.6	195.354	539.932
8.7	195.182	539.886
8.8	197.417	537.027
8.9	195.945	539.164
9	194.684	539.836
9.1	194.355	539.875
9.2	194.172	539.85
9.3	194.008	539.831
9.4	193.848	539.818
9.5	193.689	539.809
9.6	193.544	539.799
9.7	193.419	539.785
9.8	193.299	539.772
9.9	193.173	539.766
10	193.046	539.762

Table 4-7 Regenerative heat exchanger room and Regenerative heat exchanger valve room compartment Nodal Description

C. Break Type : Letdown line (3B) guillotine break
Break Area : 0.03755 (ft^2)
Break location : Volume number 20

Volume No.	Description	Height (ft)	Free Volume (ft^3)	Initial Conditions			Calculated Peak Press. Diff. (psid)	Design Peak Press. Diff (psid)	Margin (%)
				Temp. (deg F)	Press. (psia)	Humid. (%)			
1	Enclosed area by regenerative Hx,support strcture, SE wall,and SW wall in regenerative Hx room:between EL 50'-2" and 53'-5.76"	3.31	77	120	14.396	0	1.13	10	785.0
2	Enclosed area by regenerative Hx,support strcture, NW wall,and SW wall in regenerative Hx room:between EL 50'-2" and 53'-5.76"	3.31	54	120	14.396	0	1.13	10	785.0
3	Enclosed area by regenerative Hx,support strcture, and SE wall in regenerative Hx room:between EL 50'-2" and 53'-5.76"	3.31	66	120	14.396	0	1.18	10	747.5
4	Enclosed area by regenerative Hx,support strcture, and NW wall in regenerative Hx room:between EL 50'-2" and 53'-5.76"	3.31	43	120	14.396	0	1.17	10	754.7

Table 4-7 Regenerative heat exchanger room and Regenerative heat exchanger valve room compartment Nodal Description

C. Break Type : Letdown line (3B) guillotine break
Break Area : 0.03755 (ft^2)
Break location : Volume number 20

Volume No.	Description	Height (ft)	Free Volume (ft^3)	Initial Conditions			Calculated Peak Press. Diff. (psid)	Design Peak Press. Diff (psid)	Margin (%)
				Temp. (deg F)	Press. (psia)	Humid. (%)			
5	Enclosed area by regenerative Hx,support strcture, NE wall,and SE wall in regenerative Hx room:between EL 50'-2" and 53'-5.76"	3.31	98	120	14.396	0	1.31	10	663.4
6	Enclosed area by regenerative Hx,support strcture, NE wall,and NW wall in regenerative Hx room:between EL 50'-2" and 53'-5.76"	3.31	82	120	14.396	0	1.35	10	640.7
7	Enclosed area by regenerative Hx,support strcture, SE wall,and SW wall in regenerative Hx room:between EL 53'-5.76" and 57'-9.32"	4.30	100	120	14.396	0	1.15	10	769.6
8	Enclosed area by regenerative Hx,support strcture, NW wall,and SW wall in regenerative Hx room:between EL 53'-5.76" and 57'-9.32"	4.30	70	120	14.396	0	1.17	10	754.7

Table 4-7 Regenerative heat exchanger room and Regenerative heat exchanger valve room compartment Nodal Description

C. Break Type : Letdown line (3B) guillotine break
Break Area : 0.03755 (ft^2)
Break location : Volume number 20

Volume No.	Description	Height (ft)	Free Volume (ft^3)	Initial Conditions			Calculated Peak Press. Diff. (psid)	Design Peak Press. Diff (psid)	Margin (%)
				Temp. (deg F)	Press. (psia)	Humid. (%)			
9	Enclosed area by regenerative Hx,support strcture, and SE wall in regenerative Hx room:between EL 53'-5.76" and 57'-9.32"	4.30	98	120	14.396	0	1.01	10	890.1
10	Enclosed area by regenerative Hx,support strcture, and NW wall in regenerative Hx room:between EL 53'-5.76" and 57'-9.32"	4.30	68	120	14.396	0	1.04	10	861.5
11	Enclosed area by regenerative Hx,support strcture, NE wall,and SE wall in regenerative Hx room:between EL 53'-5.76" and 57'-9.32"	4.30	127	120	14.396	0	1.13	10	785.0
12	Enclosed area by regenerative Hx,support strcture, NE wall,and NW wall in regenerative Hx room:between EL 53'-5.76" and 57'-9.32"	4.30	107	120	14.396	0	1.11	10	800.9

Table 4-7 Regenerative heat exchanger room and Regenerative heat exchanger valve room compartment Nodal Description

C. Break Type : Letdown line (3B) guillotine break
Break Area : 0.03755 (ft^2)
Break location : Volume number 20

Volume No.	Description	Height (ft)	Free Volume (ft^3)	Initial Conditions			Calculated Peak Press. Diff. (psid)	Design Peak Press. Diff (psid)	Margin (%)
				Temp. (deg F)	Press. (psia)	Humid. (%)			
13	Enclosed area by regenerative Hx,support strcture, SE wall,and SW wall in regenerative Hx room:between EL 57'-9.32" and 62'-0.88"	4.29	100	120	14.396	0	1.57	10	536.9
14	Enclosed area by regenerative Hx,support strcture, NW wall,and SW wall in regenerative Hx room:between EL 57'-9.32" and 62'-0.88"	4.29	70	120	14.396	0	1.59	10	528.9
15	Enclosed area by regenerative Hx,support strcture, and SE wall in regenerative Hx room:between EL 57'-9.32" and 62'-0.88"	4.29	98	120	14.396	0	1.15	10	769.6
16	Enclosed area by regenerative Hx,support strcture, and NW wall in regenerative Hx room:between EL 57'-9.32" and 62'-0.88"	4.29	68	120	14.396	0	1.13	10	785.0

Table 4-7 Regenerative heat exchanger room and Regenerative heat exchanger valve room compartment Nodal Description

C. Break Type : Letdown line (3B) guillotine break
Break Area : 0.03755 (ft^2)
Break location : Volume number 20

Volume No.	Description	Height (ft)	Free Volume (ft^3)	Initial Conditions			Calculated Peak Press. Diff. (psid)	Design Peak Press. Diff (psid)	Margin (%)
				Temp. (deg F)	Press. (psia)	Humid. (%)			
17	Enclosed area by regenerative Hx,support strcture, NE wall,and SE wall in regenerative Hx room:between EL 57'-9.32" and 62'-0.88"	4.29	127	120	14.396	0	0.98	10	920.4
18	Enclosed area by regenerative Hx,support strcture, NE wall,and NW wall in regenerative Hx room:between EL 57'-9.32" and 62'-0.88"	4.29	107	120	14.396	0	0.94	10	963.8
19	Enclosed area by regenerative Hx,support strcture, SE wall,and SW wall in regenerative Hx room:between EL 62'-0.88" and 66'-3"	4.18	99	120	14.396	0	2.25	10	344.4
20	Enclosed area by regenerative Hx,support strcture, NW wall,and SW wall in regenerative Hx room:between EL 62'-0.88" and 66'-3"	4.18	70	120	14.396	0	3.17	10	215.5

Table 4-7 Regenerative heat exchanger room and Regenerative heat exchanger valve room compartment Nodal Description

C. Break Type : Letdown line (3B) guillotine break
Break Area : 0.03755 (ft^2)
Break location : Volume number 20

Volume No.	Description	Height (ft)	Free Volume (ft^3)	Initial Conditions			Calculated Peak Press. Diff. (psid)	Design Peak Press. Diff (psid)	Margin (%)
				Temp. (deg F)	Press. (psia)	Humid. (%)			
21	Enclosed area by regenerative Hx,support strcture, and SE wall in regenerative Hx room:between EL 62'-0.88" and 66'-3"	4.18	98	120	14.396	0	1.21	10	726.4
22	Enclosed area by regenerative Hx,support strcture, and NW wall in regenerative Hx room:between EL 62'-0.88" and 66'-3"	4.18	69	120	14.396	0	1.21	10	726.4
23	Enclosed area by regenerative Hx,support strcture, NE wall,and SE wall in regenerative Hx room:between EL 62'-0.88" and 66'-3"	4.18	126	120	14.396	0	1.19	10	740.3
24	Enclosed area by regenerative Hx,support strcture, NE wall,and NW wall in regenerative Hx room:between EL 62'-0.88" and 66'-3"	4.18	106	120	14.396	0	1.25	10	700.0

Table 4-7 Regenerative heat exchanger room and Regenerative heat exchanger valve room compartment Nodal Description

C. Break Type : Letdown line (3B) guillotine break
Break Area : 0.03755 (ft^2)
Break location : Volume number 20

Volume No.	Description	Height (ft)	Free Volume (ft^3)	Initial Conditions			Calculated Peak Press. Diff. (psid)	Design Peak Press. Diff (psid)	Margin (%)
				Temp. (deg F)	Press. (psia)	Humid. (%)			
25	Southwest part of piping room divided into 3 parts	16.42	501	120	14.396	0	0.69	16	2218.8
26	Central part of piping room divided into 3 parts	16.42	501	120	14.396	0	0.67	16	2288.1
27	Northeast part of piping room divided into 3 parts	16.42	501	120	14.396	0	0.66	16	2324.2
28	Opening to piping room	6.58	22	120	14.396	0	0.63	16	2439.7
29	Corridor:between EL 50'-2" and 53'-5.76"	3.31	50	120	14.396	0	0.61	10	1539.3
30	Corridor:between EL 53'-5.76" and 57'-9.32"	4.30	65	120	14.396	0	0.60	10	1566.7
31	Corridor:between EL 57'-9.32" and 62'-0.88"	4.29	65	120	14.396	0	0.59	10	1594.9
32	Corridor:between EL 62'-0.88" and 66'-3"	4.18	63	120	14.396	0	0.59	10	1594.9
33	Containment Building Free Volume	200	2740000	120	14.396	0			

Table 4-8 Regenerative heat exchanger room and Regenerative heat exchanger valve room compartment Nodal Description

C. Break Type : Letdown line (3B) guillotine break
Break Area : 0.03755 (ft^2)
Break location : Volume number 20

Vent Path No.	Volume No.		Description of Vent Path Flow		Area (ft^2)	Inertia Length (ft)	Hydraulic Diameter (ft)	Friction Length (ft)	Loss Coefficient K			
	From	To	Choked	Unchoked					Turning and Obstruction	Expansion	Contraction	Total
1	V1	V2		X	15.38	3.55	3.35	4.26		1.0	0.5	1.5
2	V1	V3		X	11.23	5.89	3.09	7.07		1.0	0.5	1.5
3	V2	V4		X	7.22	5.89	2.67	7.07		1.0	0.5	1.5
4	V3	V4		X	10.50	3.55	2.73	4.26		1.0	0.5	1.5
5	V3	V5		X	11.23	6.47	3.09	7.76		1.0	0.5	1.5
6	V4	V6		X	7.22	7.35	2.67	8.82		1.0	0.5	1.5
7	V5	V6		X	25.45	3.73	4.2	4.48		1.0	0.5	1.5
8	V6	V29		X	6.63	7.5	2.49	9		0.0	0.5	0.5
9	V1	V7		X	20.96	3.81	4.19	4.57		1.0	0.5	1.5
10	V2	V8		X	14.03	3.81	3.18	4.57		1.0	0.5	1.5
11	V3	V9		X	19.26	3.81	4.2	4.57		1.0	0.5	1.5
12	V4	V10		X	12.30	3.81	3.08	4.57		1.0	0.5	1.5
13	V5	V11		X	27.26	3.81	4.47	4.57		1.0	0.5	1.5
14	V6	V12		X	22.60	3.81	3.85	4.57		1.0	0.5	1.5
15	V7	V8		X	18.60	3.55	3.66	4.26		1.0	0.5	1.5
16	V7	V9		X	16.56	5.89	4.11	7.07		1.0	0.5	1.5
17	V8	V10		X	11.50	5.89	3.34	7.07		1.0	0.5	1.5
18	V9	V10		X	15.11	3.55	3.57	4.26		1.0	0.5	1.5
19	V9	V11		X	16.56	6.47	4.11	7.76		1.0	0.5	1.5
20	V10	V12		X	11.50	7.35	3.34	8.82		1.0	0.5	1.5
21	V11	V12		X	31.06	3.73	4.74	4.48		1.0	0.5	1.5
22	V12	V30		X	8.59	7.5	2.73	9		0.0	0.5	0.5

Table 4-8 Regenerative heat exchanger room and Regenerative heat exchanger valve room compartment Nodal Description

C. Break Type : Letdown line (3B) guillotine break
Break Area : 0.03755 (ft^2)
Break location : Volume number 20

Vent Path No.	Volume No.		Description of Vent Path Flow		Area (ft^2)	Inertia Length (ft)	Hydraulic Diameter (ft)	Friction Length (ft)	Loss Coefficient K			
	From	To	Choked	Unchoked					Turning and Obstruction	Expansion	Contraction	Total
23	V7	V13		X	12.58	2.62	4.19	10.94		1.0	0.5	1.5
24	V8	V14		X	8.42	2.62	3.18	9.52		1.0	0.5	1.5
25	V9	V15		X	11.56	2.62	4.2	10.96		1.0	0.5	1.5
26	V10	V16		X	7.38	2.62	3.08	9.38		1.0	0.5	1.5
27	V11	V17		X	16.36	2.62	4.47	11.34		1.0	0.5	1.5
28	V12	V18		X	13.56	2.62	3.85	10.46		1.0	0.5	1.5
29	V13	V14		X	18.60	3.55	3.66	4.26		1.0	0.5	1.5
30	V13	V15		X	16.56	5.89	4.11	7.07		1.0	0.5	1.5
31	V14	V16		X	11.50	5.89	3.34	7.07		1.0	0.5	1.5
32	V15	V16		X	15.11	3.55	3.57	4.26		1.0	0.5	1.5
33	V15	V17		X	16.56	6.47	4.11	7.76		1.0	0.5	1.5
34	V16	V18		X	11.50	7.35	3.34	8.82		1.0	0.5	1.5
35	V17	V18		X	31.06	3.73	4.74	4.48		1.0	0.5	1.5
36	V18	V31		X	8.59	7.5	2.73	9		0.0	0.5	0.5
37	V13	V19		X	20.96	4.24	4.19	5.09		1.0	0.5	1.5
38	V14	V20		X	14.03	4.24	3.18	5.09		1.0	0.5	1.5
39	V15	V21		X	19.26	4.24	4.2	5.09		1.0	0.5	1.5
40	V16	V22		X	12.30	4.24	3.08	5.09		1.0	0.5	1.5
41	V17	V23		X	27.26	4.24	4.47	5.09		1.0	0.5	1.5
42	V18	V24		X	22.60	4.24	3.85	5.09		1.0	0.5	1.5
43	V19	V20		X	21.23	3.55	4.22	4.26		1.0	0.5	1.5
44	V19	V21		X	16.66	5.89	4.1	7.07		1.0	0.5	1.5
45	V20	V22		X	11.74	5.89	3.38	7.07		1.0	0.5	1.5

Table 4-8 Regenerative heat exchanger room and Regenerative heat exchanger valve room compartment Nodal Description

C. Break Type : Letdown line (3B) guillotine break
Break Area : 0.03755 (ft^2)
Break location : Volume number 20

Vent Path No.	Volume No.		Description of Vent Path Flow		Area (ft^2)	Inertia Length (ft)	Hydraulic Diameter (ft)	Friction Length (ft)	Loss Coefficient K			
	From	To	Choked	Unchoked					Turning and Obstruction	Expansion	Contraction	Total
46	V21	V22		X	19.53	3.55	4.24	4.26		1.0	0.5	1.5
47	V21	V23		X	16.66	6.47	4.1	7.76		1.0	0.5	1.5
48	V22	V24		X	11.74	7.35	3.38	8.82		1.0	0.5	1.5
49	V23	V24		X	33.37	3.73	5.14	4.48		1.0	0.5	1.5
50	V24	V32		X	8.35	7.5	2.7	9		0.0	0.5	0.5
51	V25	V26		X	91.66	5.76	8.33	6.91		0.0	0.0	0.0
52	V26	V27		X	91.66	5.76	8.33	6.91		0.0	0.0	0.0
53	V27	V28		X	13.17	3.92	3.07	4.7		0.0	0.5	0.5
54	V28	V29		X	6.63	2.22	2.49	2.66	0.64	2.1	0.0	2.74
55	V28	V30		X	6.54	2.22	2.48	2.66	0.64	2.1	0.0	2.74
56	V29	V30		X	15.17	3.81	3.17	4.57		0.0	0.0	0.0
57	V30	V31		X	15.17	4.3	3.17	5.16		0.0	0.0	0.0
58	V31	V32		X	15.17	4.24	3.17	5.09		0.0	0.0	0.0
59	V29	V33		X	6.63	3.79	2.49	4.55		1.0	0.0	1.0
60	V30	V33		X	8.59	3.79	2.73	4.55		1.0	0.0	1.0
61	V31	V33		X	8.59	3.79	2.73	4.55		1.0	0.0	1.0
62	V32	V33		X	8.35	3.79	2.7	4.55		1.0	0.0	1.0

Table 4-9 Regenerative heat exchanger room and Regenerative heat exchanger valve room compartment Nodal Description

D. Break Type : Letdown line (3B) guillotine break
Break Area : 0.03755 (ft^2)
Break location : Volume number 27

Volume No.	Description	Height (ft)	Free Volume (ft^3)	Initial Conditions			Calculated Peak Press. Diff. (psid)	Design Peak Press. Diff (psid)	Margin (%)
				Temp. (deg F)	Press. (psia)	Humid. (%)			
1	Enclosed area by regenerative Hx,support strcture, SE wall,and SW wall in regenerative Hx room:between EL 50'-2" and 53'-5.76"	3.31	77	120	14.396	0	0.59	10	1594.9
2	Enclosed area by regenerative Hx,support strcture, NW wall,and SW wall in regenerative Hx room:between EL 50'-2" and 53'-5.76"	3.31	54	120	14.396	0	0.59	10	1594.9
3	Enclosed area by regenerative Hx,support strcture, and SE wall in regenerative Hx room:between EL 50'-2" and 53'-5.76"	3.31	66	120	14.396	0	0.59	10	1594.9
4	Enclosed area by regenerative Hx,support strcture, and NW wall in regenerative Hx room:between EL 50'-2" and 53'-5.76"	3.31	43	120	14.396	0	0.59	10	1594.9

Table 4-9 Regenerative heat exchanger room and Regenerative heat exchanger valve room compartment Nodal Description

D. Break Type : Letdown line (3B) guillotine break
Break Area : 0.03755 (ft^2)
Break location : Volume number 27

Volume No.	Description	Height (ft)	Free Volume (ft^3)	Initial Conditions			Calculated Peak Press. Diff. (psid)	Design Peak Press. Diff (psid)	Margin (%)
				Temp. (deg F)	Press. (psia)	Humid. (%)			
5	Enclosed area by regenerative Hx,support strcture, NE wall,and SE wall in regenerative Hx room:between EL 50'-2" and 53'-5.76"	3.31	98	120	14.396	0	0.59	10	1594.9
6	Enclosed area by regenerative Hx,support strcture, NE wall,and NW wall in regenerative Hx room:between EL 50'-2" and 53'-5.76"	3.31	82	120	14.396	0	0.59	10	1594.9
7	Enclosed area by regenerative Hx,support strcture, SE wall,and SW wall in regenerative Hx room:between EL 53'-5.76" and 57'-9.32"	4.30	100	120	14.396	0	0.59	10	1594.9
8	Enclosed area by regenerative Hx,support strcture, NW wall,and SW wall in regenerative Hx room:between EL 53'-5.76" and 57'-9.32"	4.30	70	120	14.396	0	0.59	10	1594.9

Table 4-9 Regenerative heat exchanger room and Regenerative heat exchanger valve room compartment Nodal Description

D. Break Type : Letdown line (3B) guillotine break
Break Area : 0.03755 (ft^2)
Break location : Volume number 27

Volume No.	Description	Height (ft)	Free Volume (ft^3)	Initial Conditions			Calculated Peak Press. Diff. (psid)	Design Peak Press. Diff (psid)	Margin (%)
				Temp. (deg F)	Press. (psia)	Humid. (%)			
9	Enclosed area by regenerative Hx,support strcture, and SE wall in regenerative Hx room:between EL 53'-5.76" and 57'-9.32"	4.30	98	120	14.396	0	0.59	10	1594.9
10	Enclosed area by regenerative Hx,support strcture, and NW wall in regenerative Hx room:between EL 53'-5.76" and 57'-9.32"	4.30	68	120	14.396	0	0.59	10	1594.9
11	Enclosed area by regenerative Hx,support strcture, NE wall,and SE wall in regenerative Hx room:between EL 53'-5.76" and 57'-9.32"	4.30	127	120	14.396	0	0.59	10	1594.9
12	Enclosed area by regenerative Hx,support strcture, NE wall,and NW wall in regenerative Hx room:between EL 53'-5.76" and 57'-9.32"	4.30	107	120	14.396	0	0.59	10	1594.9

Table 4-9 Regenerative heat exchanger room and Regenerative heat exchanger valve room compartment Nodal Description

D. Break Type : Letdown line (3B) guillotine break
Break Area : 0.03755 (ft^2)
Break location : Volume number 27

Volume No.	Description	Height (ft)	Free Volume (ft^3)	Initial Conditions			Calculated Peak Press. Diff. (psid)	Design Peak Press. Diff (psid)	Margin (%)
				Temp. (deg F)	Press. (psia)	Humid. (%)			
13	Enclosed area by regenerative Hx,support strcture, SE wall,and SW wall in regenerative Hx room:between EL 57'-9.32" and 62'-0.88"	4.29	100	120	14.396	0	0.59	10	1594.9
14	Enclosed area by regenerative Hx,support strcture, NW wall,and SW wall in regenerative Hx room:between EL 57'-9.32" and 62'-0.88"	4.29	70	120	14.396	0	0.59	10	1594.9
15	Enclosed area by regenerative Hx,support strcture, and SE wall in regenerative Hx room:between EL 57'-9.32" and 62'-0.88"	4.29	98	120	14.396	0	0.59	10	1594.9
16	Enclosed area by regenerative Hx,support strcture, and NW wall in regenerative Hx room:between EL 57'-9.32" and 62'-0.88"	4.29	68	120	14.396	0	0.59	10	1594.9

Table 4-9 Regenerative heat exchanger room and Regenerative heat exchanger valve room compartment Nodal Description

D. Break Type : Letdown line (3B) guillotine break
Break Area : 0.03755 (ft^2)
Break location : Volume number 27

Volume No.	Description	Height (ft)	Free Volume (ft^3)	Initial Conditions			Calculated Peak Press. Diff. (psid)	Design Peak Press. Diff (psid)	Margin (%)
				Temp. (deg F)	Press. (psia)	Humid. (%)			
17	Enclosed area by regenerative Hx,support strcture, NE wall,and SE wall in regenerative Hx room:between EL 57'-9.32" and 62'-0.88"	4.29	127	120	14.396	0	0.59	10	1594.9
18	Enclosed area by regenerative Hx,support strcture, NE wall,and NW wall in regenerative Hx room:between EL 57'-9.32" and 62'-0.88"	4.29	107	120	14.396	0	0.58	10	1624.1
19	Enclosed area by regenerative Hx,support strcture, SE wall,and SW wall in regenerative Hx room:between EL 62'-0.88" and 66'-3"	4.18	99	120	14.396	0	0.58	10	1624.1
20	Enclosed area by regenerative Hx,support strcture, NW wall,and SW wall in regenerative Hx room:between EL 62'-0.88" and 66'-3"	4.18	70	120	14.396	0	0.58	10	1624.1

Table 4-9 Regenerative heat exchanger room and Regenerative heat exchanger valve room compartment Nodal Description

D. Break Type : Letdown line (3B) guillotine break
Break Area : 0.03755 (ft^2)
Break location : Volume number 27

Volume No.	Description	Height (ft)	Free Volume (ft^3)	Initial Conditions			Calculated Peak Press. Diff. (psid)	Design Peak Press. Diff (psid)	Margin (%)
				Temp. (deg F)	Press. (psia)	Humid. (%)			
21	Enclosed area by regenerative Hx,support strcture, and SE wall in regenerative Hx room:between EL 62'-0.88" and 66'-3"	4.18	98	120	14.396	0	0.58	10	1624.1
22	Enclosed area by regenerative Hx,support strcture, and NW wall in regenerative Hx room:between EL 62'-0.88" and 66'-3"	4.18	69	120	14.396	0	0.58	10	1624.1
23	Enclosed area by regenerative Hx,support strcture, NE wall,and SE wall in regenerative Hx room:between EL 62'-0.88" and 66'-3"	4.18	126	120	14.396	0	0.58	10	1624.1
24	Enclosed area by regenerative Hx,support strcture, NE wall,and NW wall in regenerative Hx room:between EL 62'-0.88" and 66'-3"	4.18	106	120	14.396	0	0.58	10	1624.1

Table 4-9 Regenerative heat exchanger room and Regenerative heat exchanger valve room compartment Nodal Description

D. Break Type : Letdown line (3B) guillotine break
Break Area : 0.03755 (ft^2)
Break location : Volume number 27

Volume No.	Description	Height (ft)	Free Volume (ft^3)	Initial Conditions			Calculated Peak Press. Diff. (psid)	Design Peak Press. Diff (psid)	Margin (%)
				Temp. (deg F)	Press. (psia)	Humid. (%)			
25	Southwest part of piping room divided into 3 parts	16.42	501	120	14.396	0	10.60	16	50.9
26	Central part of piping room divided into 3 parts	16.42	501	120	14.396	0	10.60	16	50.9
27	Northeast part of piping room divided into 3 parts	16.42	501	120	14.396	0	10.60	16	50.9
28	Opening to piping room	6.58	22	120	14.396	0	9.60	16	66.7
29	Corridor:between EL 50'-2" and 53'-5.76"	3.31	50	120	14.396	0	0.75	10	1233.3
30	Corridor:between EL 53'-5.76" and 57'-9.32"	4.30	65	120	14.396	0	0.75	10	1233.3
31	Corridor:between EL 57'-9.32" and 62'-0.88"	4.29	65	120	14.396	0	0.58	10	1624.1
32	Corridor:between EL 62'-0.88" and 66'-3"	4.18	63	120	14.396	0	0.58	10	1624.1
33	Containment Building Free Volume	200	2740000	120	14.396	0			

Table 4-10 Regenerative heat exchanger room and Regenerative heat exchanger valve room compartment Nodal Description

D. Break Type : Letdown line (3B) guillotine break
Break Area : 0.03755 (ft^2)
Break location : Volume number 27

Vent Path No.	Volume No.		Description of Vent Path Flow		Area (ft^2)	Inertia Length (ft)	Hydraulic Diameter (ft)	Friction Length (ft)	Loss Coefficient K			
	From	To	Choked	Unchoked					Turning and Obstruction	Expansion	Contraction	Total
1	V1	V2		X	15.38	3.55	3.35	4.26		1.0	0.5	1.5
2	V1	V3		X	11.23	5.89	3.09	7.07		1.0	0.5	1.5
3	V2	V4		X	7.22	5.89	2.67	7.07		1.0	0.5	1.5
4	V3	V4		X	10.50	3.55	2.73	4.26		1.0	0.5	1.5
5	V3	V5		X	11.23	6.47	3.09	7.76		1.0	0.5	1.5
6	V4	V6		X	7.22	7.35	2.67	8.82		1.0	0.5	1.5
7	V5	V6		X	25.45	3.73	4.2	4.48		1.0	0.5	1.5
8	V6	V29		X	6.63	7.5	2.49	9		0.0	0.5	0.5
9	V1	V7		X	20.96	3.81	4.19	4.57		1.0	0.5	1.5
10	V2	V8		X	14.03	3.81	3.18	4.57		1.0	0.5	1.5
11	V3	V9		X	19.26	3.81	4.2	4.57		1.0	0.5	1.5
12	V4	V10		X	12.30	3.81	3.08	4.57		1.0	0.5	1.5
13	V5	V11		X	27.26	3.81	4.47	4.57		1.0	0.5	1.5
14	V6	V12		X	22.60	3.81	3.85	4.57		1.0	0.5	1.5
15	V7	V8		X	18.60	3.55	3.66	4.26		1.0	0.5	1.5
16	V7	V9		X	16.56	5.89	4.11	7.07		1.0	0.5	1.5
17	V8	V10		X	11.50	5.89	3.34	7.07		1.0	0.5	1.5
18	V9	V10		X	15.11	3.55	3.57	4.26		1.0	0.5	1.5
19	V9	V11		X	16.56	6.47	4.11	7.76		1.0	0.5	1.5
20	V10	V12		X	11.50	7.35	3.34	8.82		1.0	0.5	1.5
21	V11	V12		X	31.06	3.73	4.74	4.48		1.0	0.5	1.5
22	V12	V30		X	8.59	7.5	2.73	9		0.0	0.5	0.5

Table 4-10 Regenerative heat exchanger room and Regenerative heat exchanger valve room compartment Nodal Description

D. Break Type : Letdown line (3B) guillotine break
Break Area : 0.03755 (ft^2)
Break location : Volume number 27

Vent Path No.	Volume No.		Description of Vent Path Flow		Area (ft^2)	Inertia Length (ft)	Hydraulic Diameter (ft)	Friction Length (ft)	Loss Coefficient K			
	From	To	Choked	Unchoked					Turning and Obstruction	Expansion	Contraction	Total
23	V7	V13		X	12.58	2.62	4.19	10.94		1.0	0.5	1.5
24	V8	V14		X	8.42	2.62	3.18	9.52		1.0	0.5	1.5
25	V9	V15		X	11.56	2.62	4.2	10.96		1.0	0.5	1.5
26	V10	V16		X	7.38	2.62	3.08	9.38		1.0	0.5	1.5
27	V11	V17		X	16.36	2.62	4.47	11.34		1.0	0.5	1.5
28	V12	V18		X	13.56	2.62	3.85	10.46		1.0	0.5	1.5
29	V13	V14		X	18.60	3.55	3.66	4.26		1.0	0.5	1.5
30	V13	V15		X	16.56	5.89	4.11	7.07		1.0	0.5	1.5
31	V14	V16		X	11.50	5.89	3.34	7.07		1.0	0.5	1.5
32	V15	V16		X	15.11	3.55	3.57	4.26		1.0	0.5	1.5
33	V15	V17		X	16.56	6.47	4.11	7.76		1.0	0.5	1.5
34	V16	V18		X	11.50	7.35	3.34	8.82		1.0	0.5	1.5
35	V17	V18		X	31.06	3.73	4.74	4.48		1.0	0.5	1.5
36	V18	V31		X	8.59	7.5	2.73	9		0.0	0.5	0.5
37	V13	V19		X	20.96	4.24	4.19	5.09		1.0	0.5	1.5
38	V14	V20		X	14.03	4.24	3.18	5.09		1.0	0.5	1.5
39	V15	V21		X	19.26	4.24	4.2	5.09		1.0	0.5	1.5
40	V16	V22		X	12.30	4.24	3.08	5.09		1.0	0.5	1.5
41	V17	V23		X	27.26	4.24	4.47	5.09		1.0	0.5	1.5
42	V18	V24		X	22.60	4.24	3.85	5.09		1.0	0.5	1.5
43	V19	V20		X	21.23	3.55	4.22	4.26		1.0	0.5	1.5
44	V19	V21		X	16.66	5.89	4.1	7.07		1.0	0.5	1.5
45	V20	V22		X	11.74	5.89	3.38	7.07		1.0	0.5	1.5

Table 4-10 Regenerative heat exchanger room and Regenerative heat exchanger valve room compartment Nodal Description

D. Break Type : Letdown line (3B) guillotine break
Break Area : 0.03755 (ft^2)
Break location : Volume number 27

Vent Path No.	Volume No.		Description of Vent Path Flow		Area (ft^2)	Inertia Length (ft)	Hydraulic Diameter (ft)	Friction Length (ft)	Loss Coefficient K			
	From	To	Choked	Unchoked					Turning and Obstruction	Expansion	Contraction	Total
46	V21	V22		X	19.53	3.55	4.24	4.26		1.0	0.5	1.5
47	V21	V23		X	16.66	6.47	4.1	7.76		1.0	0.5	1.5
48	V22	V24		X	11.74	7.35	3.38	8.82		1.0	0.5	1.5
49	V23	V24		X	33.37	3.73	5.14	4.48		1.0	0.5	1.5
50	V24	V32		X	8.35	7.5	2.7	9		0.0	0.5	0.5
51	V25	V26		X	91.66	5.76	8.33	6.91		0.0	0.0	0.0
52	V26	V27		X	91.66	5.76	8.33	6.91		0.0	0.0	0.0
53	V27	V28		X	13.17	3.92	3.07	4.7		0.0	0.5	0.5
54	V28	V29	X		6.63	2.22	2.49	2.66	0.64	2.1	0.0	2.74
55	V28	V30	X		6.54	2.22	2.48	2.66	0.64	2.1	0.0	2.74
56	V29	V30		X	15.17	3.81	3.17	4.57		0.0	0.0	0.0
57	V30	V31		X	15.17	4.3	3.17	5.16		0.0	0.0	0.0
58	V31	V32		X	15.17	4.24	3.17	5.09		0.0	0.0	0.0
59	V29	V33		X	6.63	3.79	2.49	4.55		1.0	0.0	1.0
60	V30	V33		X	8.59	3.79	2.73	4.55		1.0	0.0	1.0
61	V31	V33		X	8.59	3.79	2.73	4.55		1.0	0.0	1.0
62	V32	V33		X	8.35	3.79	2.7	4.55		1.0	0.0	1.0

Table 4-11 Mass and Release Rates

Break Type : Letdown line (3B) guillotine break
Break Area : 0.03755 (ft^2)
Break location : Volume number 20, 27

*Mass Release Rate was doubled from the following value for guillotine break.

Time (s)	Mass Release Rate* (lbm/s)	Enthalpy (BTU/lbm)
0	0	547.478
0.001	265.636	547.478
0.002	226.818	552.579
0.003	217.104	550.99
0.004	240.192	547.642
0.005	233.745	546.735
0.006	214.337	547.222
0.007	205.432	550.659
0.008	201.788	552.362
0.009	205.368	550.036
0.01	216.964	546.693
0.011	226.881	545.718
0.012	225.618	546.307
0.013	217.658	546.74
0.014	210.022	546.905
0.015	204.953	547.068
0.016	202.222	547.432
0.017	200.889	547.949
0.018	200.642	548.265
0.019	201.552	548.129
0.02	203.853	547.559
0.021	207.341	546.844
0.022	211.17	546.289
0.023	214.556	545.946
0.024	216.457	545.932
0.025	216.229	546.187
0.026	213.988	546.517
0.027	210.651	546.798
0.028	206.993	546.989
0.029	203.637	546.975
0.03	200.694	546.934
0.031	198.308	546.898
0.032	196.543	546.863
0.033	195.401	546.83
0.034	194.836	546.794
0.035	194.779	546.75
0.036	195.152	546.69
0.037	195.875	546.609
0.038	196.877	546.504
0.039	198.083	546.381
0.04	199.419	546.247

Table 4-11 Mass and Release Rates

Break Type : Letdown line (3B) guillotine break
Break Area : 0.03755 (ft^2)
Break location : Volume number 20, 27

*Mass Release Rate was doubled from the following value for guillotine break.

Time (s)	Mass Release Rate* (lbm/s)	Enthalpy (BTU/lbm)
0.041	200.808	546.115
0.042	202.165	545.998
0.043	203.408	545.908
0.044	204.458	545.857
0.045	205.245	545.852
0.046	205.709	545.901
0.047	205.812	546.006
0.048	205.521	546.165
0.049	204.795	546.365
0.05	203.626	546.582
0.051	202.084	546.797
0.052	200.275	546.996
0.053	198.311	547.171
0.054	196.289	547.318
0.055	194.289	547.434
0.056	193.465	548.732
0.057	192.847	548.225
0.058	191.541	547.964
0.059	190.327	547.848
0.06	190.804	549.901
0.061	189.851	548.615
0.062	189.516	548.044
0.063	189.416	547.71
0.064	189.319	547.465
0.065	189.354	547.229
0.066	189.682	546.993
0.067	190.309	546.751
0.068	191.213	546.496
0.069	192.371	546.228
0.07	193.76	545.951
0.071	195.362	545.671
0.072	197.162	545.393
0.073	199.14	545.123
0.074	201.226	544.939
0.075	203.526	544.733
0.076	205.979	544.521
0.077	208.521	544.323
0.078	211.103	544.147
0.079	213.662	543.992
0.08	216.109	543.84
0.081	218.465	543.678

Table 4-11 Mass and Release Rates

Break Type : Letdown line (3B) guillotine break
Break Area : 0.03755 (ft^2)
Break location : Volume number 20, 27

*Mass Release Rate was doubled from the following value for guillotine break.

Time (s)	Mass Release Rate* (lbm/s)	Enthalpy (BTU/lbm)
0.082	220.814	543.513
0.083	223.208	543.357
0.084	225.639	543.224
0.085	228.057	543.122
0.086	230.393	543.06
0.087	232.58	543.039
0.088	234.568	543.062
0.089	236.324	543.124
0.09	237.837	543.22
0.091	239.116	543.343
0.092	240.182	543.486
0.093	241.061	543.642
0.094	241.783	543.803
0.095	242.382	543.964
0.096	242.888	544.121
0.097	243.328	544.271
0.098	243.729	544.41
0.099	244.112	544.538
0.1	244.496	544.654
0.101	244.9	544.757
0.102	245.338	544.848
0.103	245.826	544.926
0.104	246.376	544.993
0.105	247.004	545.049
0.106	247.723	545.091
0.107	248.599	545.105
0.108	249.731	545.094
0.109	251.102	545.069
0.11	252.623	545.044
0.111	254.184	545.031
0.112	255.684	545.036
0.113	257.058	545.062
0.114	258.268	545.108
0.115	259.304	545.169
0.116	260.183	545.24
0.117	260.923	545.315
0.118	261.536	545.388
0.119	262.049	545.458
0.12	262.487	545.523
0.121	262.876	545.582
0.122	263.238	545.633

Table 4-11 Mass and Release Rates

Break Type : Letdown line (3B) guillotine break
Break Area : 0.03755 (ft^2)
Break location : Volume number 20, 27

*Mass Release Rate was doubled from the following value for guillotine break.

Time (s)	Mass Release Rate* (lbm/s)	Enthalpy (BTU/lbm)
0.123	263.589	545.678
0.124	263.942	545.716
0.125	264.285	545.743
0.126	264.659	545.754
0.127	265.069	545.759
0.128	265.46	545.769
0.129	265.812	545.785
0.13	266.127	545.805
0.131	266.409	545.829
0.132	266.66	545.854
0.133	266.879	545.881
0.134	267.064	545.909
0.135	267.21	545.939
0.136	267.313	545.969
0.137	267.376	546
0.138	267.4	546.03
0.139	267.39	546.06
0.14	267.352	546.088
0.141	267.294	546.115
0.142	267.224	546.139
0.143	267.171	546.161
0.144	267.2	546.181
0.145	267.297	546.194
0.146	267.431	546.202
0.147	267.582	546.209
0.148	267.749	546.215
0.149	267.949	546.22
0.15	268.206	546.223
0.151	268.541	546.224
0.152	268.964	546.221
0.153	269.478	546.218
0.154	270.08	546.215
0.155	270.756	546.214
0.156	271.485	546.216
0.157	272.256	546.223
0.158	273.056	546.233
0.159	273.871	546.247
0.16	274.688	546.265
0.161	275.492	546.287
0.162	276.27	546.312
0.163	277.014	546.339

Table 4-11 Mass and Release Rates

Break Type : Letdown line (3B) guillotine break
Break Area : 0.03755 (ft^2)
Break location : Volume number 20, 27

*Mass Release Rate was doubled from the following value for guillotine break.

Time (s)	Mass Release Rate* (lbm/s)	Enthalpy (BTU/lbm)
0.164	277.717	546.368
0.165	278.361	546.396
0.166	278.93	546.423
0.167	279.456	546.448
0.168	279.97	546.471
0.169	280.481	546.493
0.17	280.981	546.512
0.171	281.459	546.531
0.172	281.907	546.549
0.173	282.321	546.566
0.174	282.691	546.582
0.175	282.975	546.596
0.176	283.199	546.607
0.177	283.424	546.615
0.178	283.688	546.622
0.179	284	546.627
0.18	284.353	546.631
0.181	284.734	546.637
0.182	285.133	546.645
0.183	285.537	546.654
0.184	285.94	546.665
0.185	286.37	546.678
0.186	286.947	546.699
0.187	287.358	546.723
0.188	287.592	546.749
0.189	287.78	546.774
0.19	288.012	546.797
0.191	288.316	546.817
0.192	288.69	546.835
0.193	289.133	546.852
0.194	289.642	546.87
0.195	290.213	546.887
0.196	290.835	546.905
0.197	291.501	546.924
0.198	292.147	546.942
0.199	292.833	546.958
0.2	293.615	546.976
0.205	297.45	547.074
0.21	301.23	547.14
0.215	306.194	547.298
0.22	310.625	547.44

Table 4-11 Mass and Release Rates

Break Type : Letdown line (3B) guillotine break
Break Area : 0.03755 (ft^2)
Break location : Volume number 20, 27

*Mass Release Rate was doubled from the following value for guillotine break.

Time (s)	Mass Release Rate* (lbm/s)	Enthalpy (BTU/lbm)
0.225	314.247	547.563
0.23	317.415	547.681
0.235	320.909	547.793
0.24	326.628	547.887
0.245	332.913	547.985
0.25	338.101	548.069
0.255	340.801	548.143
0.26	342.274	548.211
0.265	343.448	548.275
0.27	344.849	548.338
0.275	346.964	548.404
0.28	350.946	548.476
0.285	356.565	548.555
0.29	361.685	548.636
0.295	363.843	548.708
0.3	363.331	548.768
0.305	362.508	548.823
0.31	362.4	548.877
0.315	362.564	548.932
0.32	362.785	548.985
0.325	363.283	549.039
0.33	364.743	549.095
0.335	367.012	549.154
0.34	368.237	549.211
0.345	367.667	549.261
0.35	366.382	549.307
0.355	365.631	549.353
0.36	365.452	549.399
0.365	365.307	549.446
0.37	365.141	549.491
0.375	365.196	549.537
0.38	365.66	549.583
0.385	366.393	549.629
0.39	366.829	549.675
0.395	366.537	549.718
0.4	365.827	549.759
0.405	365.341	549.799
0.41	365.226	549.839
0.415	365.173	549.878
0.42	365.032	549.917
0.425	364.966	549.955

Table 4-11 Mass and Release Rates

Break Type : Letdown line (3B) guillotine break
Break Area : 0.03755 (ft^2)
Break location : Volume number 20, 27

*Mass Release Rate was doubled from the following value for guillotine break.

Time (s)	Mass Release Rate* (lbm/s)	Enthalpy (BTU/lbm)
0.43	365.1	549.993
0.435	365.351	550.03
0.44	365.475	550.067
0.445	365.311	550.102
0.45	364.974	550.136
0.455	364.734	550.169
0.46	364.666	550.202
0.465	364.625	550.234
0.47	364.513	550.265
0.475	364.408	550.295
0.48	364.407	550.325
0.485	364.484	550.354
0.49	364.533	550.382
0.495	364.49	550.41
0.5	364.393	550.436
0.6	364.879	550.699
0.7	364.487	550.791
0.8	364.133	550.811
0.9	364.022	550.81
1	364.088	550.807
1.1	364.07	550.808
1.2	364.157	550.811
1.3	364.335	550.816
1.4	364.418	550.823
1.5	364.459	550.831
1.6	364.532	550.84
1.7	364.457	550.848
1.8	364.083	550.856
1.9	363.946	550.864
2	363.647	550.871
2.1	363.176	550.878
2.2	362.863	550.884
2.3	362.408	550.891
2.4	362.068	550.897
2.5	361.757	550.904
2.6	361.732	550.913
2.7	361.402	550.922
2.8	361.264	550.932
2.9	361.199	550.943
3	361.207	550.956
3.1	361.248	550.97

Table 4-11 Mass and Release Rates

Break Type : Letdown line (3B) guillotine break
Break Area : 0.03755 (ft^2)
Break location : Volume number 20, 27

*Mass Release Rate was doubled from the following value for guillotine break.

Time (s)	Mass Release Rate* (lbm/s)	Enthalpy (BTU/lbm)
3.2	361.118	550.985
3.3	361.233	551
3.4	361.159	551.016
3.5	361.137	551.032
3.6	360.957	551.049
3.7	360.867	551.065
3.8	360.861	551.081
3.9	360.749	551.097
4	360.537	551.113
4.1	360.456	551.13
4.2	360.277	551.146
4.3	360.227	551.162
4.4	360.083	551.178
4.5	360.071	551.195
4.6	359.961	551.213
4.7	359.729	551.23
4.8	359.627	551.248
4.9	359.422	551.267
5	359.319	551.286
5.1	359.345	551.305
5.2	359.243	551.325
5.3	359.03	551.345
5.4	358.935	551.366
5.5	358.944	551.387
5.6	358.86	551.409
5.7	358.668	551.431
5.8	358.608	551.453
5.9	358.456	551.476
6	358.437	551.498
6.1	358.312	551.521
6.2	358.086	551.544
6.3	357.982	551.566
6.4	357.789	551.589
6.5	357.715	551.612
6.6	357.757	551.635
6.7	357.685	551.657
6.8	357.484	551.679
6.9	357.394	551.701
7	357.416	551.722
7.1	357.312	551.743
7.2	357.07	551.763

Table 4-11 Mass and Release Rates

Break Type : Letdown line (3B) guillotine break
Break Area : 0.03755 (ft^2)
Break location : Volume number 20, 27

*Mass Release Rate was doubled from the following value for guillotine break.

Time (s)	Mass Release Rate* (lbm/s)	Enthalpy (BTU/lbm)
7.3	356.941	551.783
7.4	356.907	551.802
7.5	356.965	551.82
7.6	356.889	551.838
7.7	356.681	551.855
7.8	356.561	551.871
7.9	356.54	551.886
8	356.373	551.9
8.1	356.294	551.914
8.2	356.301	551.926
8.3	356.151	551.938
8.4	356.093	551.949
8.5	356.082	551.959
8.6	355.948	551.969
8.7	355.867	551.977
8.8	355.849	551.985
8.9	355.908	551.992
9	355.773	551.998
9.1	355.714	552.004
9.2	355.708	552.009
9.3	355.53	552.013
9.4	355.627	552.017
9.5	355.535	552.019
9.6	355.502	552.022
9.7	355.286	552.023
9.8	355.334	552.025
9.9	355.209	552.025
10	355.359	552.026

Figure 4-1 Nodalization scheme of Regenerative heat exchanger room and Regenerative Heat exchanger valve room compartment

Figure 4-2 Nodalization scheme of Regenerative heat exchanger room and Regenerative Heat exchanger valve room compartment

Figure 4-3 Nodalization scheme of Regenerative heat exchanger room and Regenerative Heat exchanger valve room compartment

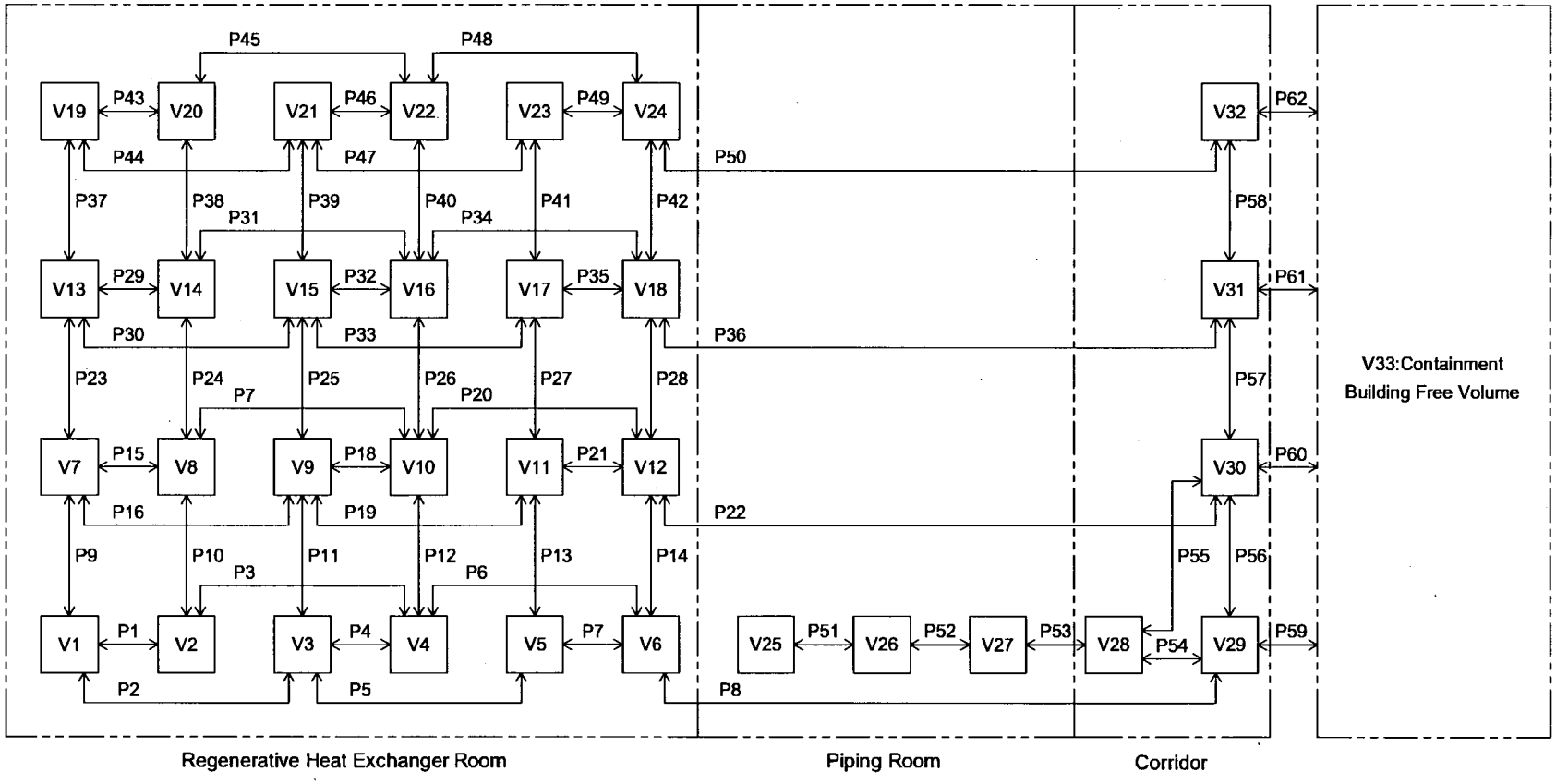

Figure 4-4 Nodalization diagram of Regenerative heat exchanger room and Regenerative Heat exchanger valve room compartment

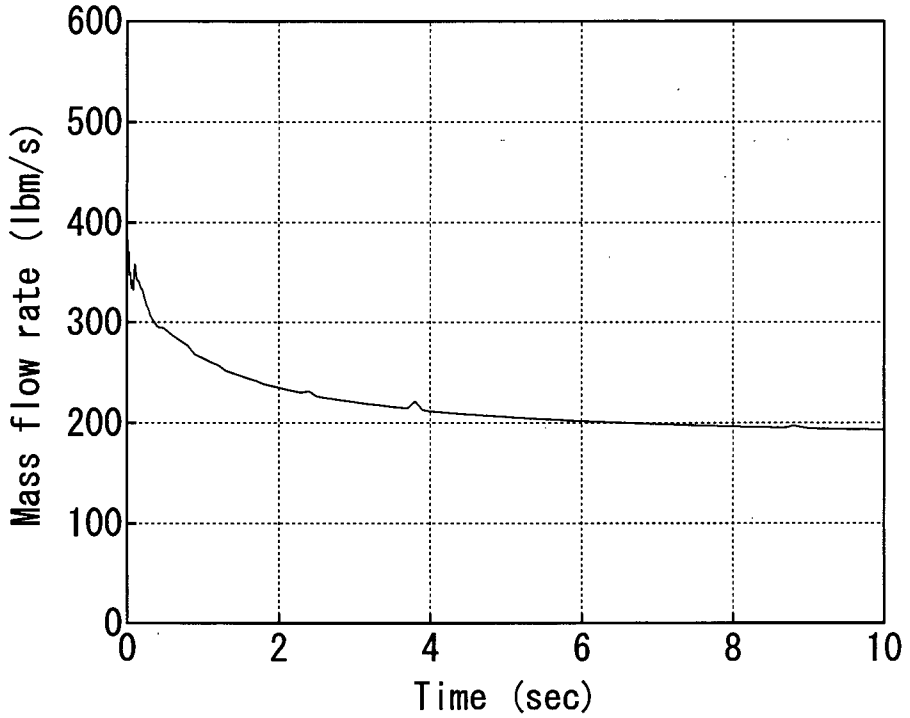

Figure 4-5 Short term mass and energy release data for Charging line (4B) break (1/2)

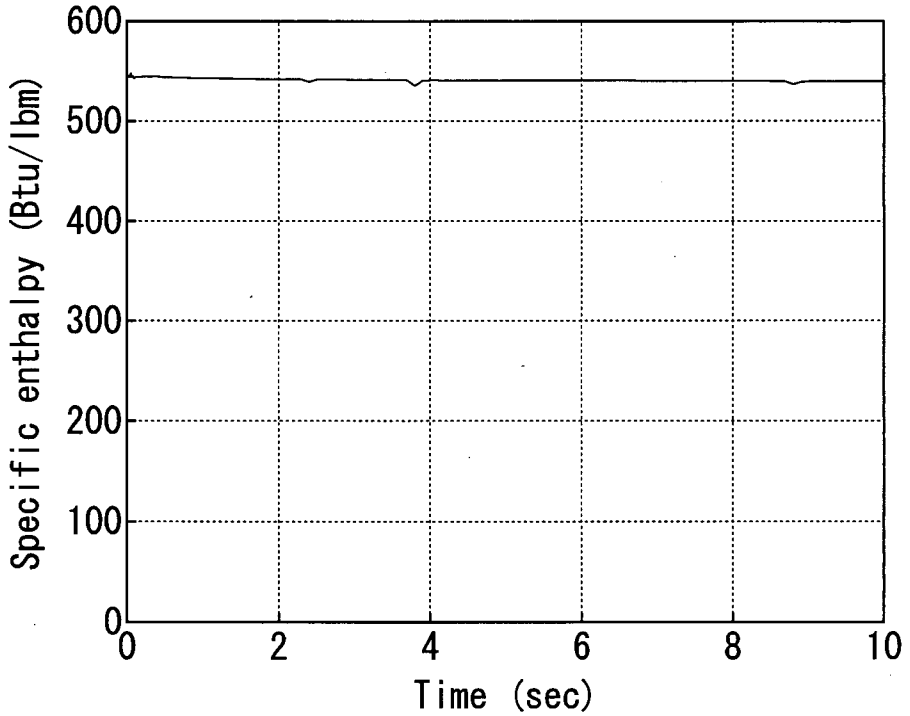

Figure 4-6 Short term mass and energy release data for Charging line (4B) break (2/2)

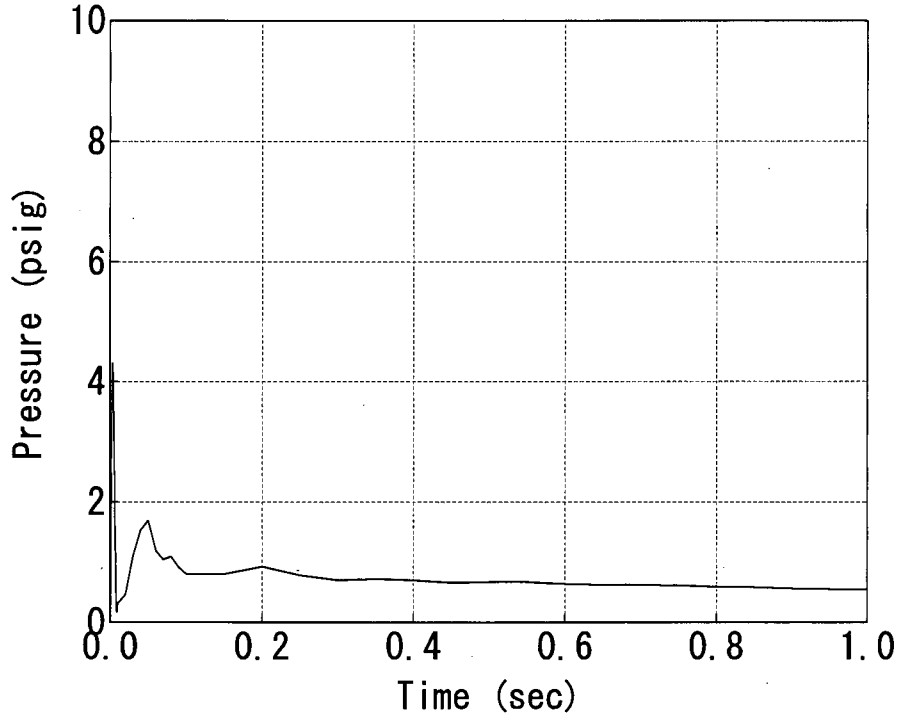

Figure 4-7 Pressure transient at the peak pressure node (V6) for Charging line (4B) break in Regenerative Heat exchanger valve room compartment Nodal Description

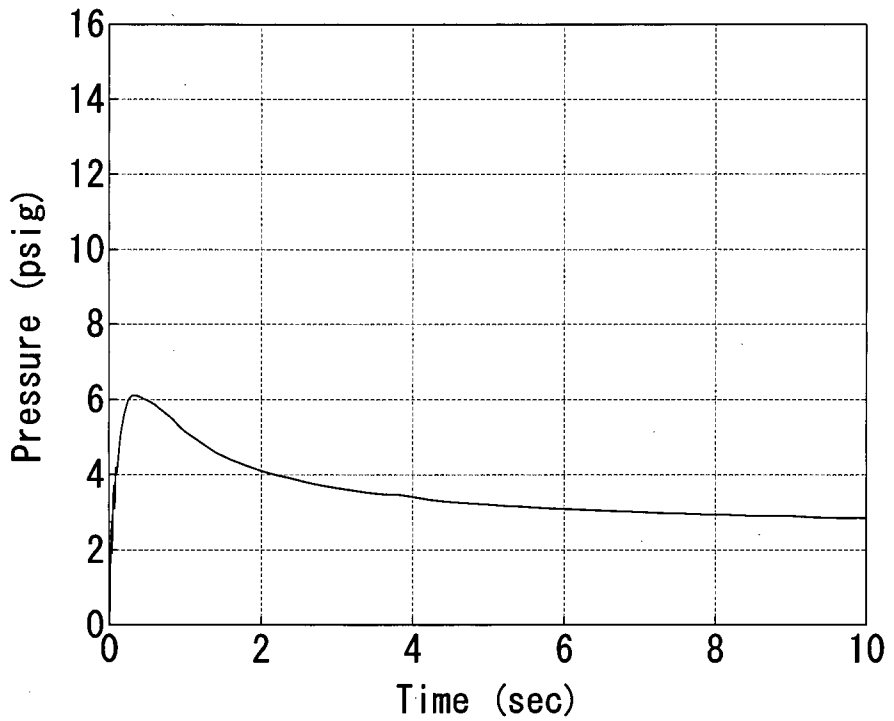

Figure 4-8 Pressure transient at the peak pressure node (V25) for Charging line (4B) break in Regenerative Heat exchanger valve room compartment Nodal Description

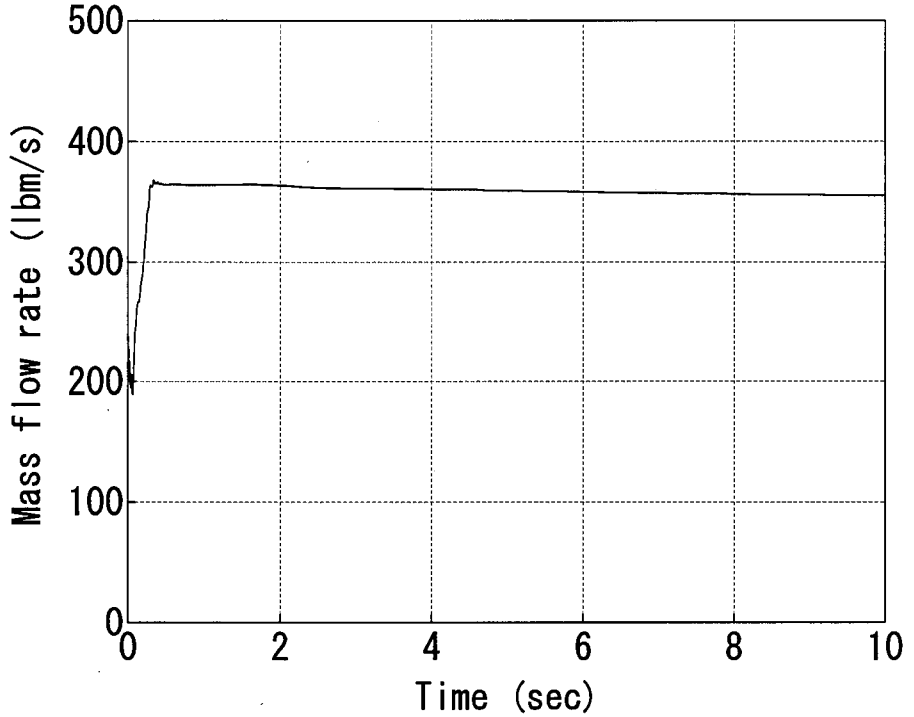

Figure 4-9 Short term mass and energy release data for Letdown line (3B) break (1/2)

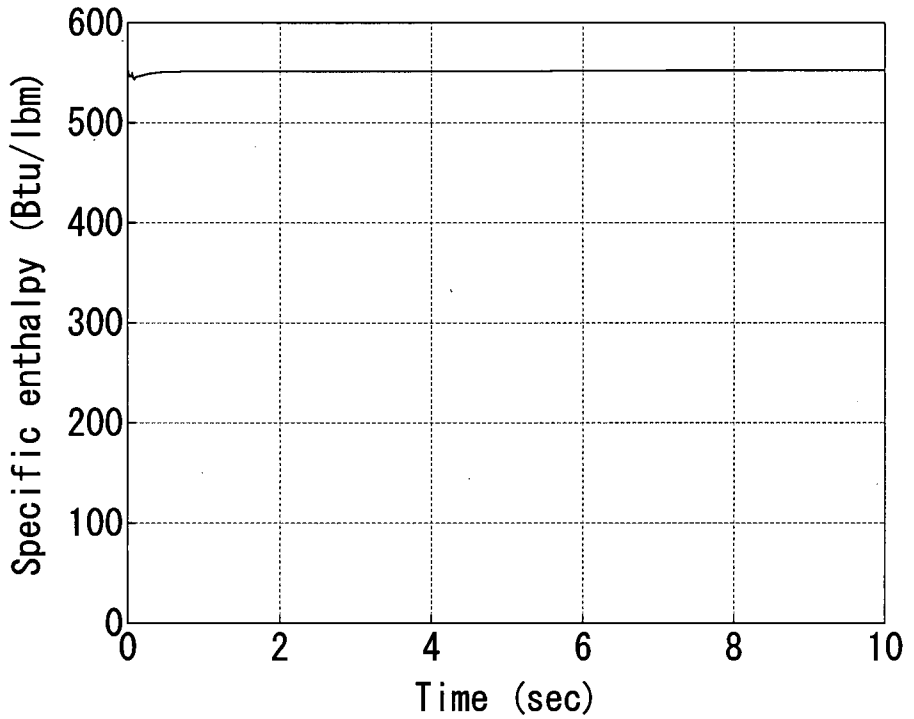

Figure 4-10 Short term mass and energy release data for Letdown line (3B) break (2/2)

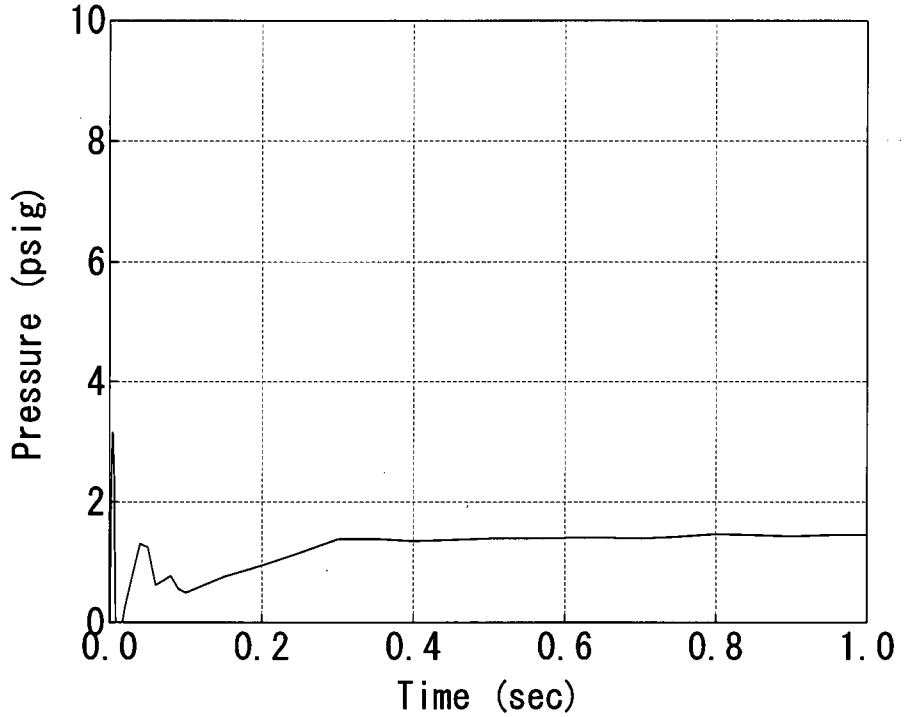

Figure 4-11 Pressure transient at the peak pressure node (V20) for Letdown line (3B) break in Regenerative heat exchanger room compartment Nodal Description

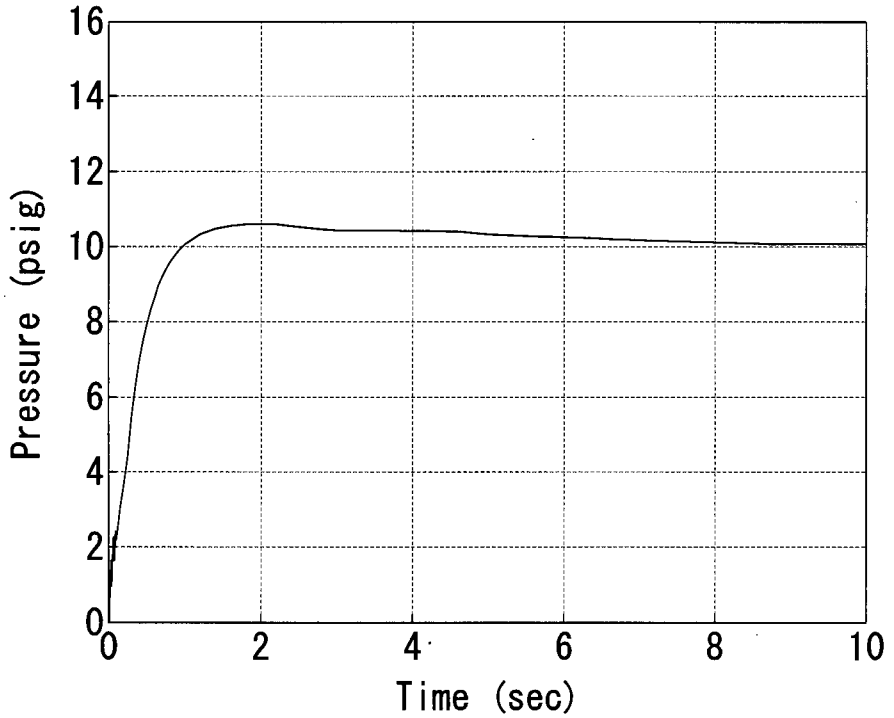

Figure 4-12 Pressure transient at the peak pressure node (V25) for Letdown line (3B) break in Regenerative heat exchanger room valve compartment Nodal Description

2. HIGH ENERGY PIPES PENETRATING LETDOWN HEAT EXCHANGER VALVE ROOM COMPARTMENT

the letdown heat exchanger valve room compartment are the letdown line as shown on Table 4-12.

2.1. MODELING

(b) Nodal description

The nodalization used for US-APWR Letdown heat exchanger room compartment is shown on Figure 4-13 and Nodalization diagram is shown on Figure 4-14. A total 10 nodes, including the containment atmosphere node, are used for the regenerative heat exchanger room and regenerative heat exchanger valve room compartment analyses.

The description and geometric parameters for each node are summarized in Figure 4-14. The free volume of each node was estimated by subtracting the obstructed volume from the room volume. The obstructed volume was estimated the volume of main components with margin to assure minimum free volume. This assumption generates conservative results.

(b) Vent path description

The vent path connection diagram is shown in Figure 4-14. Geometric and hydraulic parameters for each vent path are summarized in Table 4-14.

Vent paths P15 run from the Letdown heat exchanger room to containment atmosphere node.

The flow area of each vent path is conservatively estimated considering the flow obstruction by main components, including margin. The friction length is conservatively estimated considering the length of expected flow line plus margin. The loss coefficient is conservatively estimated considering the effect of obstruction, contraction and expansion.

2.2. SHORT TERM MASS AND ENERGY RELEASE DATA

The analysis of short term mass and energy release is performed using M-RELAP5 code which is also used for the small break LOCA analysis for the US-APWR. Nodalization of reactor coolant system for short term mass and energy release is same as the small break LOCA analysis.

(a) Letdown line break

Break mass and energy flow is released from the cross-over leg side and CVCS side. For the cross-over leg side, the pressure at the break location will be less than the cross-over leg due to the pressure drop at the elbows. The letdown line between the cross-over leg and the break location is included in the model to account for the pressure drop in the letdown line. The line to the inlet of the regenerative heat exchanger room was conservatively modeled as the end of letdown line. And the loss coefficients for the elbows were conservatively assumed at minimum value. The initial pressure and temperature were conservatively set to

the maximum values of pressure and temperature in the letdown line. The resultant short term mass and energy release data are shown in Table 4-15 and the transient of break mass flow rate and enthalpy are shown in Figure 4-15 to Figure 4-16.

The mass and energy flow is most unlikely to occur at the CVCS side because the temperature and pressure of CVCS are much lower than that of RCS. Therefore, to calculate subcompartment analysis conservatively, the break mass and energy flow on the same side as the cross-over was used.

2.3. CALCULATED PRESSURE RESPONSES

The subcompartment analysis of charging line break was analyzed in every node which the line passed through. The worst case for break location is in node V2. The calculated peak pressure was 4.8 psig at the break node V2. The pressure transient at V2 is shown in Figure 4-17. The design pressure for all nodes in pressurizer compartment is 10 psig and the calculated peak pressure is much less than the design pressure.

Table 4-12 High energy pipes penetrating the Letdown heat exchanger room compartment			
Subcompartment	Line	Line Spec	LBB considerations
Letdown heat exchanger room	Letdown Line	4-CS-601R	Break

Table 4-13 Letdown heat exchanger room compartment Nodal Description

Break Type : Letdown line (4B) guillotine break
Break Area : 0.03755 (ft^2)
Break location : Volume number 2

Volume No.	Description	Height (ft)	Free Volume (ft^3)	Initial Conditions			Calculated Peak Press. Diff. (psid)	Design Peak Press. Diff (psid)	Margin (%)
				Temp. (deg F)	Press. (psia)	Humid. (%)			
1	Northeast quadrant in letdown Hx room:between EL 50'-2" and 55'-0.73"	4.89	110	120	14.4	0	4.55	10	119.8
2	Southeast quadrant in letdown Hx room:between EL 50'-2" and 55'-0.73"	4.89	62	120	14.4	0	5.14	10	94.6
3	Northwest quadrant in letdown Hx room:between EL 50'-2" and 55'-0.73"	4.89	225	120	14.4	0	4.51	10	121.7
4	Southwest quadrant in letdown Hx room:between EL 50'-2" and 55'-0.73"	4.89	132	120	14.4	0	4.48	10	123.2
5	Northeast quadrant in letdown Hx room:between EL 55'-0.73" and 74'-5"	19.36	437	120	14.4	0	4.51	10	121.7

Table 4-13 Letdown heat exchanger room compartment Nodal Description

Break Type : Letdown line (4B) guillotine break
Break Area : 0.03755 (ft^2)
Break location : Volume number 2

Volume No.	Description	Height (ft)	Free Volume (ft^3)	Initial Conditions			Calculated Peak Press. Diff. (psid)	Design Peak Press. Diff (psid)	Margin (%)
				Temp. (deg F)	Press. (psia)	Humid. (%)			
6	Southeast quadrant in letdown Hx room:between EL 55'-0.73" and 74'-5"	19.36	257	120	14.4	0	4.51	10	121.7
7	Northwest quadrant in letdown Hx room:between EL 55'-0.73" and 74'-5"	19.36	869	120	14.4	0	4.50	10	122.2
8	Southwest quadrant in letdown Hx room:between EL 55'-0.73" and 74'-5"	19.36	521	120	14.4	0	4.50	10	122.2
9	Doorway	6.92	166	120	14.4	0	3.95	10	153.2
10	Containment Building Free Volume	200	2740000	120	14.4	0			

Table 4-14 Letdown heat exchanger room compartment Nodal Description

Break Type : Charging line (4B) guillotine break

Break Area : 0.03755 (ft^2)

Break location : Volume number 6

Vent Path No.	Volume No.		Description of Vent Path Flow		Area (ft^2)	Inertia Length (ft)	Hydraulic Diameter (ft)	Friction Length (ft)	Loss Coefficient K			
	From	To	Choked	Unchoked					Turning and Obstruction	Expansion	Contraction	Total
1	V1	V2		X	10.28	6.32	2.84	7.58		1.0	0.5	1.5
2	V1	V3		X	22.51	6.69	4.62	8.03		1.0	0.5	1.5
3	V2	V4		X	10.28	6.93	2.84	8.32		1.0	0.5	1.5
4	V3	V4		X	28.22	5.97	5.18	7.16		1.0	0.5	1.5
5	V1	V5		X	21.88	12.13	4.42	14.56		1.0	0.5	1.5
6	V2	V6		X	12.09	12.13	3.27	14.56		1.0	0.5	1.5
7	V3	V7		X	45.41	12.13	6.7	14.56		1.0	0.5	1.5
8	V4	V8		X	26.45	12.13	4.78	14.56		1.0	0.5	1.5
9	V5	V6		X	52.07	6.32	4.51	7.58		1.0	0.5	1.5
10	V5	V7		X	100.46	6.69	7.85	8.03		1.0	0.5	1.5
11	V6	V8		X	52.07	6.93	4.51	8.32		1.0	0.5	1.5
12	V7	V8		X	123.04	5.97	9.19	7.16		1.0	0.5	1.5
13	V4	V9		X	14.68	5.82	5.84	6.98		0.0	0.5	0.5
14	V8	V9		X	6.07	5.82	1.54	6.98		0.0	0.5	0.5
15	V9	V10		X	20.75	4.5	4.19	5.4	2.5	1.0	0.0	3.5

Table 4-15 Mass and Release Rates

B. Break Type : Letdown line (3B) guillotine break
Break Area : 0.03755 (ft^2)
Break location : Volume number 2

*Mass Release Rate was doubled from the following value for guillotine break.

Time (s)	Mass Release Rate (lbm/s)	Enthalpy (BTU/lbm)
0	0	547.478
0.001	265.636	547.478
0.002	226.818	552.579
0.003	217.104	550.99
0.004	240.192	547.642
0.005	233.745	546.735
0.006	214.337	547.222
0.007	205.432	550.659
0.008	201.788	552.362
0.009	205.368	550.036
0.01	216.964	546.693
0.011	226.881	545.718
0.012	225.618	546.307
0.013	217.658	546.74
0.014	210.022	546.905
0.015	204.953	547.068
0.016	202.222	547.432
0.017	200.889	547.949
0.018	200.642	548.265
0.019	201.552	548.129
0.02	203.853	547.559
0.021	207.341	546.844
0.022	211.17	546.289
0.023	214.556	545.946
0.024	216.457	545.932
0.025	216.229	546.187
0.026	213.988	546.517
0.027	210.651	546.798
0.028	206.993	546.989
0.029	203.637	546.975
0.03	200.694	546.934
0.031	198.308	546.898
0.032	196.543	546.863
0.033	195.401	546.83
0.034	194.836	546.794
0.035	194.779	546.75
0.036	195.152	546.69
0.037	195.875	546.609
0.038	196.877	546.504
0.039	198.083	546.381
0.04	199.419	546.247

Table 4-15 Mass and Release Rates

B. Break Type : Letdown line (3B) guillotine break
Break Area : 0.03755 (ft^2)
Break location : Volume number 2

*Mass Release Rate was doubled from the following value for guillotine break.

Time (s)	Mass Release Rate (lbm/s)	Enthalpy (BTU/lbm)
0.041	200.808	546.115
0.042	202.165	545.998
0.043	203.408	545.908
0.044	204.458	545.857
0.045	205.245	545.852
0.046	205.709	545.901
0.047	205.812	546.006
0.048	205.521	546.165
0.049	204.795	546.365
0.05	203.626	546.582
0.051	202.084	546.797
0.052	200.275	546.996
0.053	198.311	547.171
0.054	196.289	547.318
0.055	194.289	547.434
0.056	193.465	548.732
0.057	192.847	548.225
0.058	191.541	547.964
0.059	190.327	547.848
0.06	190.804	549.901
0.061	189.851	548.615
0.062	189.516	548.044
0.063	189.416	547.71
0.064	189.319	547.465
0.065	189.354	547.229
0.066	189.682	546.993
0.067	190.309	546.751
0.068	191.213	546.496
0.069	192.371	546.228
0.07	193.76	545.951
0.071	195.362	545.671
0.072	197.162	545.393
0.073	199.14	545.123
0.074	201.226	544.939
0.075	203.526	544.733
0.076	205.979	544.521
0.077	208.521	544.323
0.078	211.103	544.147
0.079	213.662	543.992
0.08	216.109	543.84
0.081	218.465	543.678

Table 4-15 Mass and Release Rates

B. Break Type : Letdown line (3B) guillotine break
Break Area : 0.03755 (ft^2)
Break location : Volume number 2

*Mass Release Rate was doubled from the following value for guillotine break.

Time (s)	Mass Release Rate (lbm/s)	Enthalpy (BTU/lbm)
0.082	220.814	543.513
0.083	223.208	543.357
0.084	225.639	543.224
0.085	228.057	543.122
0.086	230.393	543.06
0.087	232.58	543.039
0.088	234.568	543.062
0.089	236.324	543.124
0.09	237.837	543.22
0.091	239.116	543.343
0.092	240.182	543.486
0.093	241.061	543.642
0.094	241.783	543.803
0.095	242.382	543.964
0.096	242.888	544.121
0.097	243.328	544.271
0.098	243.729	544.41
0.099	244.112	544.538
0.1	244.496	544.654
0.101	244.9	544.757
0.102	245.338	544.848
0.103	245.826	544.926
0.104	246.376	544.993
0.105	247.004	545.049
0.106	247.723	545.091
0.107	248.599	545.105
0.108	249.731	545.094
0.109	251.102	545.069
0.11	252.623	545.044
0.111	254.184	545.031
0.112	255.684	545.036
0.113	257.058	545.062
0.114	258.268	545.108
0.115	259.304	545.169
0.116	260.183	545.24
0.117	260.923	545.315
0.118	261.536	545.388
0.119	262.049	545.458
0.12	262.487	545.523
0.121	262.876	545.582
0.122	263.238	545.633

Table 4-15 Mass and Release Rates

B. Break Type : Letdown line (3B) guillotine break
Break Area : 0.03755 (ft^2)
Break location : Volume number 2

*Mass Release Rate was doubled from the following value for guillotine break.

Time (s)	Mass Release Rate (lbm/s)	Enthalpy (BTU/lbm)
0.123	263.589	545.678
0.124	263.942	545.716
0.125	264.285	545.743
0.126	264.659	545.754
0.127	265.069	545.759
0.128	265.46	545.769
0.129	265.812	545.785
0.13	266.127	545.805
0.131	266.409	545.829
0.132	266.66	545.854
0.133	266.879	545.881
0.134	267.064	545.909
0.135	267.21	545.939
0.136	267.313	545.969
0.137	267.376	546
0.138	267.4	546.03
0.139	267.39	546.06
0.14	267.352	546.088
0.141	267.294	546.115
0.142	267.224	546.139
0.143	267.171	546.161
0.144	267.2	546.181
0.145	267.297	546.194
0.146	267.431	546.202
0.147	267.582	546.209
0.148	267.749	546.215
0.149	267.949	546.22
0.15	268.206	546.223
0.151	268.541	546.224
0.152	268.964	546.221
0.153	269.478	546.218
0.154	270.08	546.215
0.155	270.756	546.214
0.156	271.485	546.216
0.157	272.256	546.223
0.158	273.056	546.233
0.159	273.871	546.247
0.16	274.688	546.265
0.161	275.492	546.287
0.162	276.27	546.312
0.163	277.014	546.339

Table 4-15 Mass and Release Rates

B. Break Type : Letdown line (3B) guillotine break
Break Area : 0.03755 (ft^2)
Break location : Volume number 2

*Mass Release Rate was doubled from the following value for guillotine break.

Time (s)	Mass Release Rate (lbm/s)	Enthalpy (BTU/lbm)
0.164	277.717	546.368
0.165	278.361	546.396
0.166	278.93	546.423
0.167	279.456	546.448
0.168	279.97	546.471
0.169	280.481	546.493
0.17	280.981	546.512
0.171	281.459	546.531
0.172	281.907	546.549
0.173	282.321	546.566
0.174	282.691	546.582
0.175	282.975	546.596
0.176	283.199	546.607
0.177	283.424	546.615
0.178	283.688	546.622
0.179	284	546.627
0.18	284.353	546.631
0.181	284.734	546.637
0.182	285.133	546.645
0.183	285.537	546.654
0.184	285.94	546.665
0.185	286.37	546.678
0.186	286.947	546.699
0.187	287.358	546.723
0.188	287.592	546.749
0.189	287.78	546.774
0.19	288.012	546.797
0.191	288.316	546.817
0.192	288.69	546.835
0.193	289.133	546.852
0.194	289.642	546.87
0.195	290.213	546.887
0.196	290.835	546.905
0.197	291.501	546.924
0.198	292.147	546.942
0.199	292.833	546.958
0.2	293.615	546.976
0.205	297.45	547.074
0.21	301.23	547.14
0.215	306.194	547.298
0.22	310.625	547.44

Table 4-15 Mass and Release Rates

B. Break Type : Letdown line (3B) guillotine break
Break Area : 0.03755 (ft^2)
Break location : Volume number 2

*Mass Release Rate was doubled from the following value for guillotine break.

Time (s)	Mass Release Rate (lbm/s)	Enthalpy (BTU/lbm)
0.225	314.247	547.563
0.23	317.415	547.681
0.235	320.909	547.793
0.24	326.628	547.887
0.245	332.913	547.985
0.25	338.101	548.069
0.255	340.801	548.143
0.26	342.274	548.211
0.265	343.448	548.275
0.27	344.849	548.338
0.275	346.964	548.404
0.28	350.946	548.476
0.285	356.565	548.555
0.29	361.685	548.636
0.295	363.843	548.708
0.3	363.331	548.768
0.305	362.508	548.823
0.31	362.4	548.877
0.315	362.564	548.932
0.32	362.785	548.985
0.325	363.283	549.039
0.33	364.743	549.095
0.335	367.012	549.154
0.34	368.237	549.211
0.345	367.667	549.261
0.35	366.382	549.307
0.355	365.631	549.353
0.36	365.452	549.399
0.365	365.307	549.446
0.37	365.141	549.491
0.375	365.196	549.537
0.38	365.66	549.583
0.385	366.393	549.629
0.39	366.829	549.675
0.395	366.537	549.718
0.4	365.827	549.759
0.405	365.341	549.799
0.41	365.226	549.839
0.415	365.173	549.878
0.42	365.032	549.917
0.425	364.966	549.955

Table 4-15 Mass and Release Rates

B. Break Type : Letdown line (3B) guillotine break
Break Area : 0.03755 (ft^2)
Break location : Volume number 2

*Mass Release Rate was doubled from the following value for guillotine break.

Time (s)	Mass Release Rate (lbm/s)	Enthalpy (BTU/lbm)
0.43	365.1	549.993
0.435	365.351	550.03
0.44	365.475	550.067
0.445	365.311	550.102
0.45	364.974	550.136
0.455	364.734	550.169
0.46	364.666	550.202
0.465	364.625	550.234
0.47	364.513	550.265
0.475	364.408	550.295
0.48	364.407	550.325
0.485	364.484	550.354
0.49	364.533	550.382
0.495	364.49	550.41
0.5	364.393	550.436
0.6	364.879	550.699
0.7	364.487	550.791
0.8	364.133	550.811
0.9	364.022	550.81
1	364.088	550.807
1.1	364.07	550.808
1.2	364.157	550.811
1.3	364.335	550.816
1.4	364.418	550.823
1.5	364.459	550.831
1.6	364.532	550.84
1.7	364.457	550.848
1.8	364.083	550.856
1.9	363.946	550.864
2	363.647	550.871
2.1	363.176	550.878
2.2	362.863	550.884
2.3	362.408	550.891
2.4	362.068	550.897
2.5	361.757	550.904
2.6	361.732	550.913
2.7	361.402	550.922
2.8	361.264	550.932
2.9	361.199	550.943
3	361.207	550.956
3.1	361.248	550.97

Table 4-15 Mass and Release Rates

B. Break Type : Letdown line (3B) guillotine break
Break Area : 0.03755 (ft^2)
Break location : Volume number 2

*Mass Release Rate was doubled from the following value for guillotine break.

Time (s)	Mass Release Rate (lbm/s)	Enthalpy (BTU/lbm)
3.2	361.118	550.985
3.3	361.233	551
3.4	361.159	551.016
3.5	361.137	551.032
3.6	360.957	551.049
3.7	360.867	551.065
3.8	360.861	551.081
3.9	360.749	551.097
4	360.537	551.113
4.1	360.456	551.13
4.2	360.277	551.146
4.3	360.227	551.162
4.4	360.083	551.178
4.5	360.071	551.195
4.6	359.961	551.213
4.7	359.729	551.23
4.8	359.627	551.248
4.9	359.422	551.267
5	359.319	551.286
5.1	359.345	551.305
5.2	359.243	551.325
5.3	359.03	551.345
5.4	358.935	551.366
5.5	358.944	551.387
5.6	358.86	551.409
5.7	358.668	551.431
5.8	358.608	551.453
5.9	358.456	551.476
6	358.437	551.498
6.1	358.312	551.521
6.2	358.086	551.544
6.3	357.982	551.566
6.4	357.789	551.589
6.5	357.715	551.612
6.6	357.757	551.635
6.7	357.685	551.657
6.8	357.484	551.679
6.9	357.394	551.701
7	357.416	551.722
7.1	357.312	551.743
7.2	357.07	551.763

Table 4-15 Mass and Release Rates

B. Break Type : Letdown line (3B) guillotine break
Break Area : 0.03755 (ft^2)
Break location : Volume number 2

*Mass Release Rate was doubled from the following value for guillotine break.

Time (s)	Mass Release Rate (lbm/s)	Enthalpy (BTU/lbm)
7.3	356.941	551.783
7.4	356.907	551.802
7.5	356.965	551.82
7.6	356.889	551.838
7.7	356.681	551.855
7.8	356.561	551.871
7.9	356.54	551.886
8	356.373	551.9
8.1	356.294	551.914
8.2	356.301	551.926
8.3	356.151	551.938
8.4	356.093	551.949
8.5	356.082	551.959
8.6	355.948	551.969
8.7	355.867	551.977
8.8	355.849	551.985
8.9	355.908	551.992
9	355.773	551.998
9.1	355.714	552.004
9.2	355.708	552.009
9.3	355.53	552.013
9.4	355.627	552.017
9.5	355.535	552.019
9.6	355.502	552.022
9.7	355.286	552.023
9.8	355.334	552.025
9.9	355.209	552.025
10	355.359	552.026

Figure 4-13 Nodalization scheme of Letdown heat exchanger room compartment

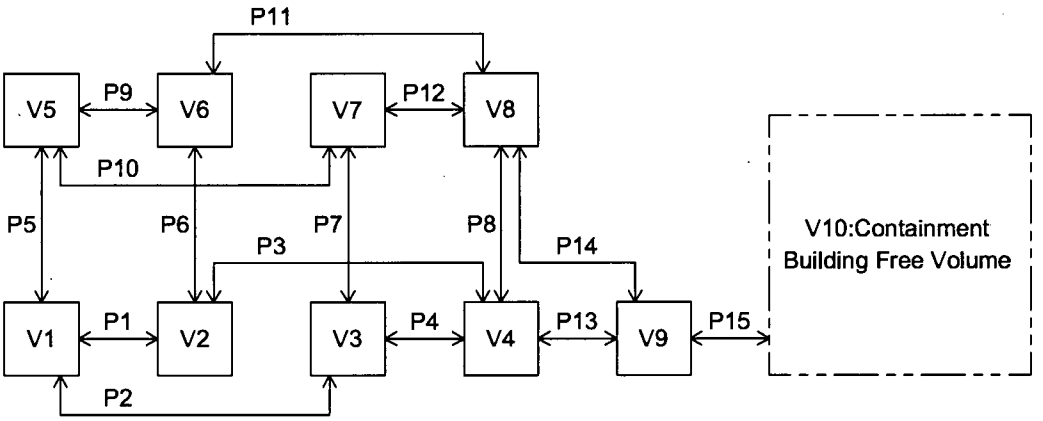

Figure 4-14 Nodalization diagram of Letdown heat exchanger room compartment

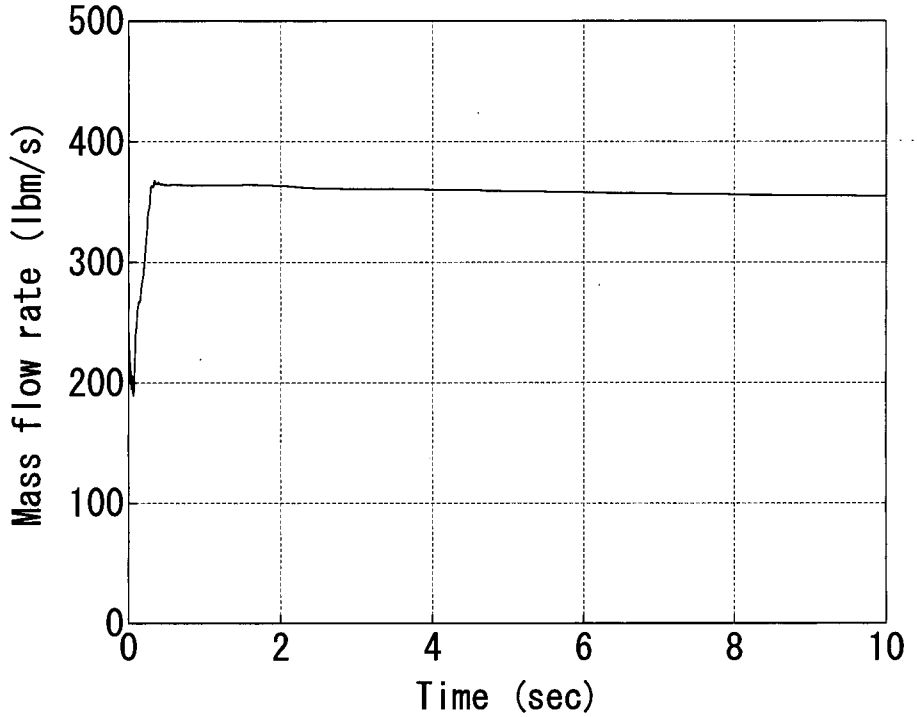

Figure 4-15 Short term mass and energy release data for Letdown line (3B) break (1/2)

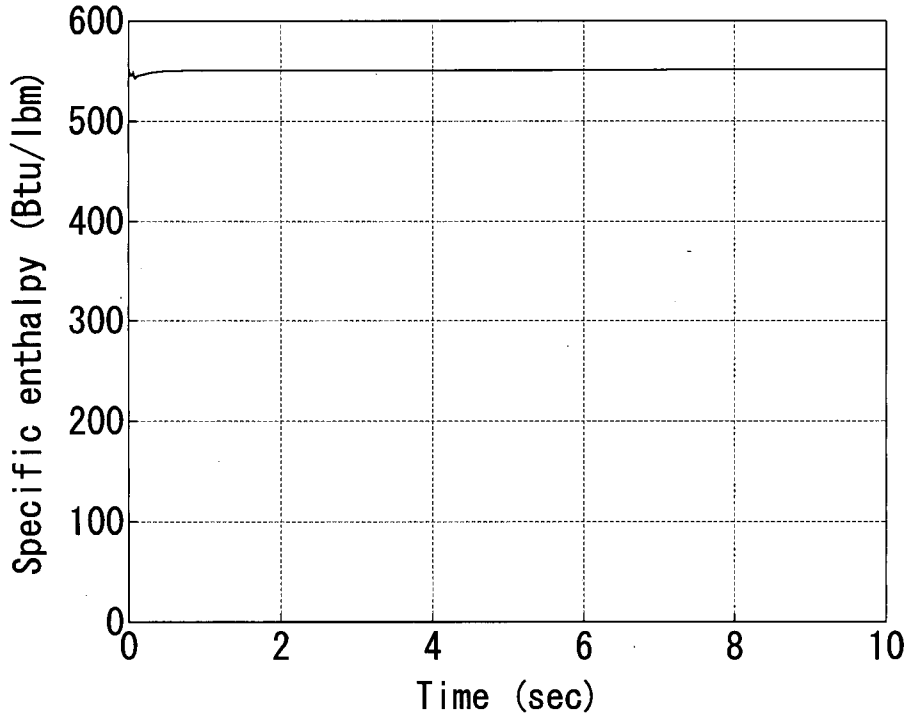

Figure 4-16 Short term mass and energy release data for Letdown line (3B) break (2/2)

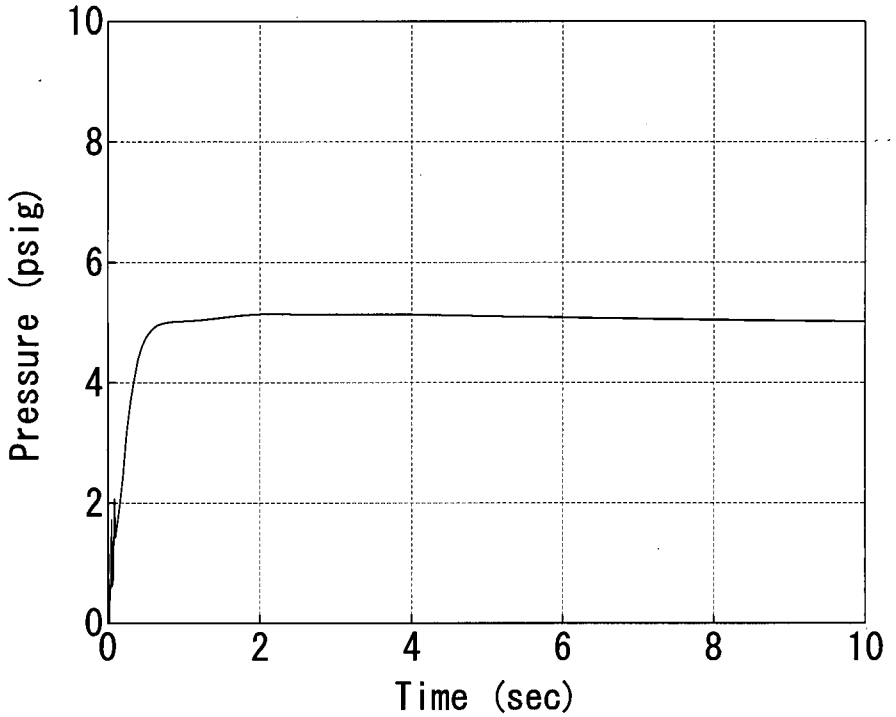

Figure 4-17 Pressure transient at the peak pressure node (V2) for Letdown line (3B) break in Letdown heat exchanger room compartment

Impact on DCD

The detailed information of the subcompartment analyses for regenerative heat exchanger room, the regenerative heat exchanger valve room and the letdown heat exchanger room will be described in next revision of MUAP-07031.

Impact on COLA

There is no impact on the COLA.

Impact on PRA

There is no impact on the PRA.

RESPONSE TO REQUEST FOR ADDITIONAL INFORMATION

2/2/2009

US-APWR Design Certification

Mitsubishi Heavy Industries

Docket No.52-021

RAI NO.:	**NO.111-932 REVISION 0**
SRP SECTION:	**06.02.01.02 – Subcompartment Analysis**
APPLICATION SECTION:	**MUAP-07031 Report**
DATE OF RAI ISSUE:	**12/3/2008**

QUESTION NO. : 06.02.01.02-7

MUAP-07031 report: Clarify the word "basically" in the statement "Mass and energy releases used for postulated primary piping breaks are basically calculated by the computer code M-RELAP5" used in section 4.2 of the report. If it refers to the discussion for the feedwater line break in the SG subcompartment, additional clarification is needed. Also, Section 6.2.1.2 of the DCD does not seem to be consistent with this statement, noting that there are two methodologies used for calculating mass and energy release.

A statement is also made in this section: "Also, the approach to assume a constant blowdown profile using initial mass and energy release conditions calculated by the computer code M-RELAP5 ..." is used for postulated secondary piping breaks. The only secondary side break analyzed was the feedwater break for the SG subcompartment. The description in that section does not seem to be consistent with this statement. These descriptions need to be clarified, describing exactly what was assumed for the blowdown in these breaks.

ANSWER:

Mass and energy release evaluations for postulated primary system piping break were calculated by the M-RELAP5 code used in small break LOCA analysis for US-APWR. The word "basically" is not appropriate. This description will be corrected in the next revision of MUAP-07031.

Mass and energy release evaluations for postulated secondary system piping break also were calculated by the MRELAP5 code and the results were described in MUAP-07031 rev.0. However, a conservative mass and energy release for secondary piping break based on a theoretical solution is proposed in this response. The modified mass and

energy release evaluation methodology for the secondary system break is described below.

<Mass and energy release from feed water pump side>

The flow rate from the piping break is summation of initial flow rate and the increased flow rate due to the fluid expansion by depressurization. The decompression expansion of fluid is propagated from break point in the speed of sound. The system pressure decreases to the saturation pressure of initial temperature.

$$M_{out} = M_{in} + M_{ex} \tag{7-1}$$

$$M_{ex} = a \cdot A \cdot (-\Delta\rho) \tag{7-2}$$

M_{out} : Break mass flow rate (lbm/sec)
M_{in} : Initial mass flow rate (lbm/sec)
M_{ex} : Increased mass flow rate due to fluid expansion (lbm/sec)
a : speed of sound (ft/sec)
A : cross-sectional area of piping (ft^2) (=1.12 ft^2)
$\Delta\rho$: change of fluid density due to expansion (lbm/ft^3)

The initial conditions and calculation results are shown in Table 7-1. The critical flow rates of liquid phase in saturation condition calculated by M-RELAP5 (M_{crit}) are also shown in Table 7-1. M_{crit} calculated by M-RELAP5 are much larger than M_{out}. And it is confirmed that M_{crit} is larger than pump flow rate with considering the pump speed increase due to the system decompression. It is conservative to assume M_{crit} as the break flow. The mass and energy release data for SG compartment pressure analysis is shown in Table 7-2.

<Mass and energy release from SG side>

For the evaluation of mass and energy release from SG side, it is assume a constant blowdown profile using initial mass and energy release conditions calculated by M-RELAP5 code. This is a conservative assumption because of neglecting a decrease in mass flow rate due to decompression. The break flow from SG side has different temperature. The part from the feed water nozzle to feedwater ring includes a comparatively low enthalpy fluid, and the secondary side of SG includes comparatively high enthalpy fluid with heat transferred from primary side. After the break occurs, these fluids with different enthalpy sequentially emitted from SG side. The duration time of first emission is calculated by the volume of part from the feed water nozzle to feedwater ring, fluid density and flow rate. The initial conditions and calculation results are shown in Table 7-3. The mass and energy release data for SG compartment pressure analysis is shown in Table 7-4.

The results of SG compartment pressure analysis using the modified mass and energy release data for feed water nozzle break is shown in Appendix A.

Table 7-1 Calculations for mass and energy release from feed water pump side

Operating mode		Full power	Zero power (Just after hot shutdown)
Initial condition	M_{in} flow rate(lbm/sec)	**2588.78**	**2397.22**
	press. (psia)	1016	1140
	Temperature(F)	456.8	456.8
	density (lbm/ft^3)	51.39	51.44
	a Speed of sound (ft/sec)	3971.42	3985.72
Saturated condition	Press. (psia)	452.3	452.3
	Temperature(F)	456.8	456.8
	Density (lbm/ft^3)	51.14	51.14
	M_{crit} Critical flow (lbm/sec)	**7424.14**	**7424.14**
	Specific enthalpy (Btu/lbm)	437.91	437.91
$-\Delta\rho$	(lbm/ft^3)	0.25	0.30
M_{ex}	(lbm/sec)	**1112**	**1339**
M_{out}	(lbm/sec)	**3700.78**	**3736.22**

Table 7-2 Mass and energy release rates from feed water pump side
(For SG compartment pressure analysis)

Time (sec)	Full power		Zero power	
	Mass flow (lbm/sec)	Specific enthalpy (Btu/lbm)	Mass flow (lbm/sec)	Specific enthalpy (Btu/lbm)
0.0	2588.78	437.91	2397.22	437.91
0.001	7424.14	437.91	7424.14	437.91
10	7424.14	437.91	7424.14	437.91

Table 7-3 Calculations for mass and energy release from SG side

Operating mode		Full power	Zero power (Just after hot shutdown)
Between feed water nozzle and feed water ring	press. (psia)	1016	1140
	Temperature(F)	456.8	456.8
	density (lbm/ft^3)	51.39	51.44
	Specific enthalpy (Btu/lbm)	438.17	438.23
	Critical flow (lbm/sec)	**18728.2**	**20587.1**
	Volume (ft^3)	27.2	27.2
	Duration time (sec)	0.075	0.068
SG secondary side	Press. (psia)	1016	1140
	Temperature(F)	515.5	560.73
	Density (lbm/ft^3)	48.22	45.25
	Specific enthalpy (Btu/lbm)	506.36	563.38
	Critical flow (lbm/sec)	**13724.3**	**11364.1**

Table 7-4 Mass and energy release rates from SG side
(For SG compartment pressure analysis)

Full power			Zero power		
Time(sec)	Mass flow (lbm/sec)	Specific enthalpy (Btu/lbm)	Time(sec)	Mass flow (lbm/sec)	Specific enthalpy (Btu/lbm)
0.0	0.0	438.17	0.0	0.0	438.23
0.001	18728.2	438.17	0.001	20587.1	438.23
0.12	18728.2	438.17	0.11	20587.1	438.23
0.120001	13724.3	506.36	0.110001	11364.1	563.38
10	13724.3	506.36	10	11364.1	563.38

Impact on DCD

The modified methodology of mass and energy release evaluation for secondary system break will be described in next revision of MUAP-07031. The results of subcompartment analyses applying the modified mass and energy release will be also shown in next revision of MUAP-07031.

Impact on COLA

There is no impact on the COLA.

Impact on PRA

There is no impact on the PRA.

RESPONSE TO REQUEST FOR ADDITIONAL INFORMATION

2/2/2008

US-APWR Design Certification

Mitsubishi Heavy Industries

Docket No.52-021

RAI NO.:	**NO.111-932 REVISION 0**
SRP SECTION:	**06.02.01.02 – Subcompartment Analysis**
APPLICATION SECTION:	**MUAP-07031 Report**
DATE OF RAI ISSUE:	**12/3/2008**

QUESTION NO. : 06.02.01.02-8

MUAP-07031 report: Section 6.1.1 states that nodalization sensitivities have been performed using two nodalizations, and that results of the sensitivity studies for the steam generator compartment and pressurizer compartment have been described in section 7. However section 7 contains "Conclusions." Additionally, there were no nodalization studies presented for the SG compartment, just the pressurizer compartment. Please,

A. correct the location of the nodalization study accordingly, and
B. provide a nodalization study for the most limiting break for the SG compartment.

ANSWER:

The correct location described about the nodalization sensitivity study is section 6.4.1.

The nodalization sensitivity study for pressurizer compartment was modified from MUAP-07031 due to the modifications of GOTHIC model setting and minor change for evaluation of mass and energy release (See response to RAI-06.02.01.02-2). Both the modified base case and sensitivity study case are shown in Appendix B.

The nodalization diagram and mass and energy release evaluation for SG compartment analysis were also modified from MUAP-07031 (See the response to 06.02.01.02-2 and 7). The SG compartment nodalization diagram for most limiting break case (feed water line break) has enough number of nodes to converge the peak calculated pressure. The detailed information of SG compartment analysis is shown in Appendix A.

Impact on DCD

The description of Section 6.1.1 in MUAP-07031 on page 6-1 will be corrected as follows.

The sensitivity study~~ies~~ for ~~the steam generator subcompartment and~~ the pressurizer subcompartment is~~are~~ described in section 6.4.1~~7~~.

Impact on COLA

There is no impact on the COLA.

Impact on PRA

There is no impact on the PRA.

RESPONSE TO REQUEST FOR ADDITIONAL INFORMATION

2/2/2009

US-APWR Design Certification

Mitsubishi Heavy Industries

Docket No.52-021

RAI NO.:	**NO.111-932 REVISION 0**
SRP SECTION:	**06.02.01.02 – Subcompartment Analysis**
APPLICATION SECTION:	**MUAP-07031 Report**
DATE OF RAI ISSUE:	**12/3/2008**

QUESTION NO. : 06.02.01.02-10

MUAP-07031 report: In section 6.3.1 (b), it states: "To obtain conservative results, all vent paths were connected to the containment atmosphere node which is maintained at constant pressure." It is not clear that this assumption is indeed conservative. Please, clarify and/or justify the conservatism of this assumption.

ANSWER:

The nodalization diagrams for SG compartment and pressurizer compartment were modified to obtain the conservative results. The leak paths connecting to other compartments (adjacent SG compartment or C/V reactor coolant drain tank compartment) were not simulated in the GOTHIC analysis models.

And the evaluation of mass and energy release from pressurizer spray line break for pressurizer compartment analysis was also modified to obtain the conservative result. The pressurizer spray line is connected from the cold legs of B loop and C loop to the top of pressurizer. The spray lines from B loop and C loop are joined in the pressurizer compartment, and connected to the head of pressurizer vessel. The break point was assumed at the joint of the spray lines from B and C loop to evaluate the conservative mass and energy release. In other words, the mass and energy releases for spray line break were assumed the emissions from 3 lines, which were the lines from the pressurizer, B loop and C loop. These mass and energy release analyses were performed using the M-RELAP5 code.

The detailed information about mass and energy release analysis and compartment pressure analysis for SG compartment and pressurizer compartment are described in Appendix A and B.

Impact on DCD

The modified nodalization diagrams and subcompartment analysis results are described in next revision of MUAP-07031.

Impact on COLA

There is no impact on the COLA.

Impact on PRA

There is no impact on the PRA.

RESPONSE TO REQUEST FOR ADDITIONAL INFORMATION

2/2/2009

US-APWR Design Certification

Mitsubishi Heavy Industries

Docket No.52-021

RAI NO.:	**NO.111-932 REVISION 0**
SRP SECTION:	**06.02.01.02 – Subcompartment Analysis**
APPLICATION SECTION:	**MUAP-07031 Report**
DATE OF RAI ISSUE:	**12/3/2008**

QUESTION NO. : 06.02.01.02-11

MUAP-07031 report: Please provide clarification of the description of how the feedwater line break release rates were determined. The description should include:

A. more detailed description than that given in 6.3.2 (c),
B. determination of the time from break initiation until the feedwater reaches saturation,
C. whether the assumed "tank" volume is depleted before the transient ends,
D. clarify the assumption regarding operating pumps, i.e., the pumps are supplying no head or normal operating head?

ANSWER:

Please see a response to No.06.02.01.02-7.

Impact on DCD

There is no impact on the DCD.

Impact on COLA

There is no impact on the COLA.

Impact on PRA

There is no impact on the PRA.

Appendix A
(Response to RAI No.111-932 February 2nd, 2009)

Detailed information for SG compartment analysis

(Non-proprietary)

List of Tables

Table A-1 Steam Generator Compartment Nodal Description 4
Table A-2 Steam Generator Compartment Vent Path Description 15
Table A-3 Mass and Energy Release Rates for Steam Generator Compartment Peak Pressure Analyses 26
Table A-4 Steam Generator Compartment Nodal Description 35
Table A-5 Steam Generator Compartment Vent Path Description 46
Table A-6 Mass and Energy Release Rates for Steam Generator Compartment Peak Pressure Analyses 57
Table A-7 Steam Generator Compartment Nodal Description 66
Table A-8 Steam Generator Compartment Vent Path Description 78
Table A-9 Mass and Energy Release Rates for Steam Generator Compartment Peak Pressure Analyses 89
Table A-10 Steam Generator Compartment Nodal Description 90
Table A-11 Steam Generator Compartment Vent Path Description 102
Table A-12 Mass and Energy Release Rates for Steam Generator Compartment Peak Pressure Analyses 113

List of Figures

Figure A-1 Nodalization scheme for Steam Generator compartment analysis (1/10). 114
Figure A-2 Nodalization scheme for Steam Generator compartment analysis (2/10). 115
Figure A-3 Nodalization scheme for Steam Generator compartment analysis (3/10). 116
Figure A-4 Nodalization scheme for Steam Generator compartment analysis (4/10). 117
Figure A-5 Nodalization scheme for Steam Generator compartment analysis (5/10). 118
Figure A-6 Nodalization scheme for Steam Generator compartment analysis (6/10). 119
Figure A-7 Nodalization scheme for Steam Generator compartment analysis (7/10). 120
Figure A-8 Nodalization scheme for Steam Generator compartment analysis (8/10). 121
Figure A-9 Nodalization scheme for Steam Generator compartment analysis (9/10). 122
Figure A-10 Nodalization scheme for Steam Generator compartment analysis (10/10) 123
Figure A-11 Nodalization diagram for Steam Generator compartment analysis(1/2) . 124
Figure A-12 Nodalization diagram for Steam Generator compartment analysis(2/2) . 125
Figure A-13 Short term mass and energy release data for SG compartment 126
Figure A-14 Short term mass and energy release data for SG compartment 127
Figure A-15 Pressure transient at the peak pressure node in SG compartment..... 128
Figure A-16 Short term mass and energy release data for SG compartment 129
Figure A-17 Short term mass and energy release data for SG compartment 130
Figure A-18 Pressure transient at the peak pressure node in SG compartment..... 131
Figure A-19 Short term mass and energy release data for SG compartment 132
Figure A-20 Short term mass and energy release data for SG compartment 133
Figure A-21 Short term mass and energy release data for SG compartment 134
Figure A-22 Short term mass and energy release data for SG compartment 135
Figure A-23 Pressure transient at the peak pressure node in SG compartment (Feedwater line break, Full power operating condition)..... 136
Figure A-24 Short term mass and energy release data for SG compartment 137
Figure A-25 Short term mass and energy release data for SG compartment 138
Figure A-26 Short term mass and energy release data for SG compartment 139
Figure A-27 Short term mass and energy release data for SG compartment 140
Figure A-28 Pressure transient at the peak pressure node in SG compartment (Feedwater line break, just after hot shutdown condition) 141

Table A-1 Steam Generator Compartment Nodal Description

A. Break Type : RHR pump inlet line(10B) guillotine break
Break Area : 0.788(ft^2)
Break location : Volume number 16

Volume No.	Description	Height (ft)	Free Volume (ft^3)	Initial Conditions			Calculated Peak Press. Diff. (psid)	Design Peak Press. Diff (psid)	Margin (%)
				Temp. (deg F)	Press. (psia)	Humid. (%)			
1	West quadrant around A-RCP in A-SG compartment:between EL 25'-3" and 36'-5"	11.17	819	120	14.396	0	5.63	18	219.7
2	North quadrant around A-RCP in A-SG compartment:between EL 25'-3" and 36'-5"	11.17	729	120	14.396	0	5.67	18	217.5
3	East quadrant around A-RCP in A-SG compartment:between EL 25'-3" and 36'-5"	11.17	1327	120	14.396	0	5.62	18	220.3
4	South quadrant around A-RCP in A-SG compartment:between EL 25'-3" and 36'-5"	11.17	1133	120	14.396	0	5.71	18	215.2
5	Northwest quadrant around A-SG in A-SG compartment:between EL 25'-3" and 36'-5"	11.17	1503	120	14.396	0	5.64	18	219.1
6	Northeast quadrant around A-SG in A-SG compartment:between EL 25'-3" and 36'-5"	11.17	1835	120	14.396	0	5.75	18	213.0

Table A-1 Steam Generator Compartment Nodal Description

A. Break Type : RHR pump inlet line(10B) guillotine break
Break Area : 0.788(ft^2)
Break location : Volume number 16

Volume No.	Description	Height (ft)	Free Volume (ft^3)	Initial Conditions			Calculated Peak Press. Diff. (psid)	Design Peak Press. Diff (psid)	Margin (%)
				Temp. (deg F)	Press. (psia)	Humid. (%)			
7	Southeast quadrant around A-SG in A-SG compartment:between EL 25'-3" and 36'-5"	11.17	1518	120	14.396	0	6.59	18	173.1
8	Southwest quadrant around A-SG in A-SG compartment:between EL 25'-3" and 36'-5"	11.17	1239	120	14.396	0	5.83	18	208.7
9	West quadrant around A-RCP in A-SG compartment:between EL 36'-5" and 46'-5.08"	10	591	120	14.396	0	5.35	18	236.4
10	North quadrant around A-RCP in A-SG compartment:between EL 36'-5" and 46'-5.08"	10	539	120	14.396	0	6.02	18	199.0
11	East quadrant around A-RCP in A-SG compartment:between EL 36'-5" and 46'-5.08"	10	1125	120	14.396	0	6.00	18	200.0
12	South quadrant around A-RCP in A-SG compartment:between EL 36'-5" and 46'-5.08"	10	967	120	14.396	0	5.42	18	232.1
13	Northwest quadrant around A-SG in A-SG compartment:between EL 36'-5" and 46'-5.08"	10	1126	120	14.396	0	5.53	18	225.5

Table A-1 Steam Generator Compartment Nodal Description

A. Break Type : RHR pump inlet line(10B) guillotine break
Break Area : 0.788(ft^2)
Break location : Volume number 16

Volume No.	Description	Height (ft)	Free Volume (ft^3)	Initial Conditions			Calculated Peak Press. Diff. (psid)	Design Peak Press. Diff (psid)	Margin (%)
				Temp. (deg F)	Press. (psia)	Humid. (%)			
14	Northeast quadrant around A-SG in A-SG compartment:between EL 36'-5" and 46'-5.08"	10	1434	120	14.396	0	5.47	18	229.1
15	Southeast quadrant around A-SG in A-SG compartment:between EL 36'-5" and 46'-5.08"	10	1227	120	14.396	0	5.57	18	223.2
16	Southwest quadrant around A-SG in A-SG compartment:between EL 36'-5" and 46'-5.08"	10	1019	120	14.396	0	11.02	18	63.3
17	West quadrant around A-RCP in A-SG compartment:between EL 46'-5.08" and 55'-1"	8.66	552	120	14.396	0	4.82	18	273.4
18	North quadrant around A-RCP in A-SG compartment:between EL 46'-5.08" and 55'-1"	8.66	461	120	14.396	0	5.04	18	257.1
19	East quadrant around A-RCP in A-SG compartment:between EL 46'-5.08" and 55'-1"	8.66	934	120	14.396	0	4.64	18	287.9
20	South quadrant around A-RCP in A-SG compartment:between EL 46'-5.08" and 55'-1"	8.66	857	120	14.396	0	4.60	18	291.3

Table A-1 Steam Generator Compartment Nodal Description

A. Break Type : RHR pump inlet line(10B) guillotine break
Break Area : 0.788(ft^2)
Break location : Volume number 16

Volume No.	Description	Height (ft)	Free Volume (ft^3)	Initial Conditions			Calculated Peak Press. Diff. (psid)	Design Peak Press. Diff (psid)	Margin (%)
				Temp. (deg F)	Press. (psia)	Humid. (%)			
21	Northwest quadrant around A-SG in A-SG compartment:between EL 46'-5.08" and 55'-1"	8.66	931	120	14.396	0	4.76	18	278.2
22	Northeast quadrant around A-SG in A-SG compartment:between EL 46'-5.08" and 55'-1"	8.66	538	120	14.396	0	4.40	18	309.1
23	Southeast quadrant around A-SG in A-SG compartment:between EL 46'-5.08" and 55'-1"	8.66	918	120	14.396	0	4.41	18	308.2
24	Southwest quadrant around A-SG in A-SG compartment:between EL 46'-5.08" and 55'-1"	8.66	802	120	14.396	0	5.26	18	242.2
25	West quadrant around A-RCP in A-SG compartment:between EL 55'-1" and 62'-4"	7.25	388	120	14.396	0	3.33	10	200.3
26	North quadrant around A-RCP in A-SG compartment:between EL 55'-1" and 62'-4"	7.25	335	120	14.396	0	3.31	10	202.1
27	East quadrant around A-RCP in A-SG compartment:between EL 55'-1" and 62'-4"	7.25	696	120	14.396	0	3.54	10	182.5

Table A-1 Steam Generator Compartment Nodal Description

A. Break Type : RHR pump inlet line(10B) guillotine break
Break Area : 0.788(ft^2)
Break location : Volume number 16

Volume No.	Description	Height (ft)	Free Volume (ft^3)	Initial Conditions			Calculated Peak Press. Diff. (psid)	Design Peak Press. Diff (psid)	Margin (%)
				Temp. (deg F)	Press. (psia)	Humid. (%)			
28	South quadrant around A-RCP in A-SG compartment:between EL 55'-1" and 62'-4"	7.25	702	120	14.396	0	3.98	10	151.3
29	Northwest quadrant around A-SG in A-SG compartment:between EL 55'-1" and 62'-4"	7.25	832	120	14.396	0	4.26	10	134.7
30	Northeast quadrant around A-SG in A-SG compartment:between EL 55'-1" and 62'-4"	7.25	546	120	14.396	0	3.78	10	164.6
31	Southeast quadrant around A-SG in A-SG compartment:between EL 55'-1" and 62'-4"	7.25	631	120	14.396	0	4.33	10	130.9
32	Southwest quadrant around A-SG in A-SG compartment:between EL 55'-1" and 62'-4"	7.25	701	120	14.396	0	4.42	10	126.2
33	West quadrant around A-RCP in A-SG compartment:between EL 62'-4" and 68'-3"	5.92	460	120	14.396	0	3.30	10	203.0
34	North quadrant around A-RCP in A-SG compartment:betweenEL 62'-4" and 68'-3"	5.92	392	120	14.396	0	3.22	10	210.6

Table A-1 Steam Generator Compartment Nodal Description

A. Break Type : RHR pump inlet line(10B) guillotine break
Break Area : 0.788(ft^2)
Break location : Volume number 16

Volume No.	Description	Height (ft)	Free Volume (ft^3)	Initial Conditions			Calculated Peak Press. Diff. (psid)	Design Peak Press. Diff (psid)	Margin (%)
				Temp. (deg F)	Press. (psia)	Humid. (%)			
35	East quadrant around A-RCP in A-SG compartment:between EL 62'-4" and 68'-3"	5.92	755	120	14.396	0	3.49	10	186.5
36	South quadrant around A-RCP in A-SG compartment:between EL 62'-4" and 68'-3"	5.92	669	120	14.396	0	3.95	10	153.2
37	Northwest quadrant around A-SG in A-SG compartment:between EL 62'-4" and 68'-3"	5.92	679	120	14.396	0	4.14	10	141.5
38	Northeast quadrant around A-SG in A-SG compartment:between EL 62'-4" and 68'-3"	5.92	809	120	14.396	0	3.62	10	176.2
39	Southeast quadrant around A-SG in A-SG compartment:between EL 62'-4" and 68'-3"	5.92	602	120	14.396	0	3.83	10	161.1
40	Southwest quadrant around A-SG in A-SG compartment:between EL 62'-4" and 68'-3"	5.92	598	120	14.396	0	4.11	10	143.3
41	West quadrant around A-RCP in A-SG compartment:between EL 68'-3" and 73'-1"	4.83	364	120	14.396	0	3.25	10	207.7

Table A-1 Steam Generator Compartment Nodal Description

A. Break Type : RHR pump inlet line(10B) guillotine break
Break Area : 0.788(ft^2)
Break location : Volume number 16

Volume No.	Description	Height (ft)	Free Volume (ft^3)	Initial Conditions			Calculated Peak Press. Diff. (psid)	Design Peak Press. Diff (psid)	Margin (%)
				Temp. (deg F)	Press. (psia)	Humid. (%)			
42	North quadrant around A-RCP in A-SG compartment:between EL 68'-3" and 73'-1"	4.83	330	120	14.396	0	3.12	10	220.5
43	East quadrant around A-RCP in A-SG compartment:between EL 68'-3" and 73'-1"	4.83	395	120	14.396	0	3.26	10	206.7
44	South quadrant around A-RCP in A-SG compartment:between EL 68'-3" and 73'-1"	4.83	265	120	14.396	0	3.53	10	183.3
45	Northwest quadrant around A-SG in A-SG compartment:between EL 68'-3" and 73'-1"	4.83	261	120	14.396	0	4.32	10	131.5
46	Northeast quadrant around A-SG in A-SG compartment:between EL 68'-3" and 73'-1"	4.83	474	120	14.396	0	3.93	10	154.5
47	Southeast quadrant around A-SG in A-SG compartment:between EL 68'-3" and 73'-1"	4.83	480	120	14.396	0	3.57	10	180.1
48	Southwest quadrant around A-SG in A-SG compartment:between EL 68'-3" and 73'-1"	4.83	269	120	14.396	0	4.10	10	143.9

Table A-1 Steam Generator Compartment Nodal Description

A. Break Type : RHR pump inlet line(10B) guillotine break
Break Area : 0.788(ft^2)
Break location : Volume number 16

Volume No.	Description	Height (ft)	Free Volume (ft^3)	Initial Conditions			Calculated Peak Press. Diff. (psid)	Design Peak Press. Diff (psid)	Margin (%)
				Temp. (deg F)	Press. (psia)	Humid. (%)			
49	Northwest quadrant around A-SG in A-SG compartment:between EL 73'-1" and 83'-9"	10.67	420	120	14.396	0	3.62	10	176.2
50	Northeast quadrant around A-SG in A-SG compartment:between EL 73'-1" and 83'-9"	10.67	888	120	14.396	0	3.63	10	175.5
51	Southeast quadrant around A-SG in A-SG compartment:between EL 73'-1" and 83'-9"	10.67	965	120	14.396	0	3.43	10	191.5
52	Southwest quadrant around A-SG in A-SG compartment:between EL 73'-1" and 83'-9"	10.67	474	120	14.396	0	3.73	10	168.1
53	Northwest quadrant around A-SG in A-SG compartment:between EL 83'-9" and 95'-1"	11.33	327	120	14.396	0	2.62	35	1235.9
54	Northeast quadrant around A-SG in A-SG compartment:between EL 83'-9" and 95'-1"	11.33	789	120	14.396	0	2.97	35	1078.5
55	Southwest quadrant around A-SG in A-SG compartment:between EL 83'-9" and 95'-1"	11.33	412	120	14.396	0	2.32	35	1408.6

Table A-1 Steam Generator Compartment Nodal Description

A. Break Type : RHR pump inlet line(10B) guillotine break
Break Area : 0.788(ft^2)
Break location : Volume number 16

Volume No.	Description	Height (ft)	Free Volume (ft^3)	Initial Conditions			Calculated Peak Press. Diff. (psid)	Design Peak Press. Diff (psid)	Margin (%)
				Temp. (deg F)	Press. (psia)	Humid. (%)			
56	Southeast quadrant around A-SG in A-SG compartment:between EL 83'-9" and 88'-11.28"	5.19	36	120	14.396	0	2.44	35	1334.4
57		5.19	42	120	14.396	0	2.43	35	1340.3
58		5.19	70	120	14.396	0	2.41	35	1352.3
59		5.19	15	120	14.396	0	2.39	-	-
60		5.19	26	120	14.396	0	2.39	-	-
61		5.19	26	120	14.396	0	2.39	-	-
62		5.19	47	120	14.396	0	2.39	35	1364.4
63		5.19	66	120	14.396	0	2.36	35	1383.1
64		5.19	40	120	14.396	0	2.30	35	1421.7
65		5.19	34	120	14.396	0	2.22	35	1476.6
66	Southeast quadrant around A-SG in A-SG compartment:between EL 88'-11.28" and 92'-8.74"	3.79	27	120	14.396	0	2.45	35	1328.6
67		3.79	31	120	14.396	0	2.39	35	1364.4
68		3.79	28	120	14.396	0	2.34	-	-
69		3.79	23	120	14.396	0	2.33	35	1402.1
70		3.79	6	120	14.396	0	2.28	-	-
71		3.79	14	120	14.396	0	2.28	-	-
72		3.79	15	120	14.396	0	2.28	-	-
73		3.79	21	120	14.396	0	2.28	-	-
74		3.79	26	120	14.396	0	2.29	35	1428.4
75		3.79	28	120	14.396	0	2.24	-	-
76		3.79	20	120	14.396	0	2.25	35	1455.6
77		3.79	29	120	14.396	0	2.20	35	1490.9
78		3.79	25	120	14.396	0	2.14	35	1535.5

Table A-1 Steam Generator Compartment Nodal Description

A. Break Type : RHR pump inlet line(10B) guillotine break
Break Area : 0.788(ft^2)
Break location : Volume number 16

Volume No.	Description	Height (ft)	Free Volume (ft^3)	Initial Conditions			Calculated Peak Press. Diff. (psid)	Design Peak Press. Diff (psid)	Margin (%)
				Temp. (deg F)	Press. (psia)	Humid. (%)			
79	Southeast quadrant around A-SG in A-SG compartment:between EL 92'-8.74" and 95'-1"	2.35	17	120	14.396	0	2.38	35	1370.6
80		2.35	19	120	14.396	0	2.31	35	1415.2
81		2.35	32	120	14.396	0	2.23	35	1469.5
82		2.35	7	120	14.396	0	2.16	-	-
83		2.35	12	120	14.396	0	2.16	-	-
84		2.35	12	120	14.396	0	2.16	-	-
85		2.35	35	120	14.396	0	2.14	35	1535.5
86		2.35	30	120	14.396	0	2.13	35	1543.2
87		2.35	18	120	14.396	0	2.10	35	1566.7
88		2.35	15	120	14.396	0	2.08	35	1582.7
89	Northwest quadrant around A-SG in A-SG compartment:between EL 95'-1" and 101'-0"	5.92	143	120	14.396	0	0.26	35	13361.5
90	Northeast quadrant around A-SG in A-SG compartment:between EL 95'-1" and 101'-0"	5.92	388	120	14.396	0	1.04	35	3265.4
91	Southeast quadrant around A-SG in A-SG compartment:between EL 95'-1" and 101'-0"	5.92	445	120	14.396	0	1.60	35	2087.5
92	Southwest quadrant around A-SG in A-SG compartment:between EL 95'-1" and 101'-0"	5.92	194	120	14.396	0	0.42	35	8233.3

Table A-1 Steam Generator Compartment Nodal Description

A. Break Type : RHR pump inlet line(10B) guillotine break
Break Area : 0.788(ft^2)
Break location : Volume number 16

Volume No.	Description	Height (ft)	Free Volume (ft^3)	Initial Conditions			Calculated Peak Press. Diff. (psid)	Design Peak Press. Diff (psid)	Margin (%)
				Temp. (deg F)	Press. (psia)	Humid. (%)			
93	Northwest quadrant around A-SG in A-SG compartment:between EL 101'-0" and 112'-0"	11.00	318	120	14.396	0	0.03	35	116566.7
94	Northeast quadrant around A-SG in A-SG compartment:between EL 101'-0" and 112'-0"	11.00	741	120	14.396	0	0.25	35	13900.0
95	Southeast quadrant around A-SG in A-SG compartment:between EL 101'-0" and 112'-0"	11.00	911	120	14.396	0	0.84	35	4066.7
96	Southwest quadrant around A-SG in A-SG compartment:between EL 101'-0" and 112'-0"	11.00	400	120	14.396	0	0.13	35	26823.1
~~97~~	~~B-SG compartment~~	~~200~~	~~47000~~	~~120~~	~~14.396~~	~~0~~	~~0.00~~	-	-
~~98~~	~~C/V reactor coolant drain tank compartment~~	~~200~~	~~3086~~	~~120~~	~~14.396~~	~~0~~	~~0.00~~	-	-
99	Containment building free volume	200	2790086	120	14.396	0	0.00	-	-

Table A-2 Steam Generator Compartment Vent Path Description

A. Break Type : RHR pump inlet line(10B) guillotine break
Break Area : 0.788(ft^2)
Break location : Volume number 16

Vent Path No	Volume No.		Description of Vent Path Flow		Area (ft^2)	Inertia Length (ft)	Hydraulic Diameter (ft)	Friction Length (ft)	Loss Coefficient K			
	From	To	Choked	Unchoked					Turning and Obstruction	Expansion	Contraction	Total
1	V1	V2		x	96.72	7.47	8.65	8.96	0.0	1.0	0.5	1.50
2	V1	V4		x	129.70	8.68	9.27	10.42	0.0	1.0	0.5	1.50
~~3~~	~~V1~~	~~V98~~		~~x~~	~~61.86~~	~~7.13~~	~~7.86~~	~~8.56~~	~~0.0~~	~~1.0~~	~~0.5~~	~~1.50~~
4	V2	V3		x	62.97	9.87	3.88	11.84	0.0	1.0	0.5	1.50
5	V3	V4		x	66.68	10.36	4.4	12.43	0.0	1.0	0.5	1.50
6	V3	V6		x	142.53	11.93	10.75	14.32	0.0	1.0	0.5	1.50
7	V3	V99		x	30.94	20.56	5.46	24.67	3.5	0.0	0.5	4.00
8	V4	V5		x	163.80	12.5	10.52	15	0.0	1.0	0.5	1.50
~~9~~	~~V4~~	~~V98~~		~~x~~	~~28.22~~	~~9.32~~	~~4.36~~	~~11.18~~	~~0.0~~	~~1.0~~	~~0.5~~	~~1.50~~
10	V5	V6		x	76.50	11.69	5.8	14.03	0.0	1.0	0.5	1.50
11	V5	V8		x	167.99	10.36	8.33	12.43	0.0	1.0	0.5	1.50
12	V6	V7		x	135.63	13.13	11.64	15.76	0.0	1.0	0.5	1.50
13	V7	V8		x	125.67	9.97	8.05	11.96	0.0	1.0	0.5	1.50
~~14~~	~~V7~~	~~V97~~		~~x~~	~~36.65~~	~~11.06~~	~~5.9~~	~~13.27~~	~~0.84~~	~~1.0~~	~~0.5~~	~~2.34~~
~~15~~	~~V8~~	~~V97~~		~~x~~	~~21.94~~	~~10.86~~	~~4.42~~	~~13.03~~	~~0.45~~	~~1.0~~	~~0.5~~	~~1.95~~
16	V1	V9		x	46.77	6.39	6.4	21.6	0.34	0.16	0.2	0.70
17	V2	V10		x	40.68	6.39	7.91	23.73	0.34	0.16	0.2	0.70
18	V3	V11		x	78.56	6.39	10.96	28.03	0.34	0.16	0.2	0.70
19	V4	V12		x	69.44	6.39	9.44	25.88	0.34	0.16	0.2	0.70
20	V5	V13		x	85.84	6.39	9.36	25.77	0.34	0.16	0.2	0.70
21	V6	V14		x	101.84	6.39	9.09	25.39	0.34	0.16	0.2	0.70
22	V7	V15		x	86.47	6.39	11.12	28.25	0.34	0.16	0.2	0.70
23	V8	V16		x	75.48	6.39	8.8	24.98	0.34	0.16	0.2	0.70

Table A-2 Steam Generator Compartment Vent Path Description

A. Break Type : RHR pump inlet line(10B) guillotine break
Break Area : 0.788(ft^2)
Break location : Volume number 16

Vent Path No	Volume No.		Description of Vent Path Flow		Area (ft^2)	Inertia Length (ft)	Hydraulic Diameter (ft)	Friction Length (ft)	Loss Coefficient K			
	From	To	Choked	Unchoked					Turning and Obstruction	Expansion	Contraction	Total
24	V9	V10		x	61.42	10.63	6.55	12.76	0.0	1.0	0.5	1.50
25	V9	V12		x	48.55	11.41	2.96	13.69	0.0	1.0	0.5	1.50
26	V10	V11		x	41.34	13.22	5.22	15.86	0.0	1.0	0.5	1.50
27	V11	V12		x	66.03	13.4	6.15	16.08	0.0	1.0	0.5	1.50
28	V11	V14		x	120.32	10.2	10.31	12.24	0.0	1.0	0.5	1.50
29	V12	V13		x	140.68	7.34	9.95	8.81	0.0	1.0	0.5	1.50
30	V13	V14		x	42.11	16.96	3.42	20.35	0.0	1.0	0.5	1.50
31	V13	V16		x	83.03	14.62	4.15	17.54	0.0	1.0	0.5	1.50
32	V14	V15		x	86.90	18.53	7.85	22.24	0.0	1.0	0.5	1.50
33	V15	V16		x	84.52	14.17	7.7	17	0.0	1.0	0.5	1.50
~~34~~	~~V15~~	~~V97~~		~~x~~	~~13.17~~	~~8.66~~	~~3.07~~	~~10.39~~	~~0.17~~	~~1.0~~	~~0.5~~	~~1.67~~
~~35~~	~~V16~~	~~V97~~		~~x~~	~~16.48~~	~~11.58~~	~~3.62~~	~~13.9~~	~~0.26~~	~~1.0~~	~~0.5~~	~~1.76~~
36	V9	V17		x	43.13	5.64	5.91	19.41	0.34	0.16	0.2	0.70
37	V10	V18		x	37.12	5.64	6.72	20.55	0.34	0.16	0.2	0.70
38	V11	V19		x	72.16	5.64	10.22	25.48	0.34	0.16	0.2	0.70
39	V12	V20		x	67.19	5.64	9.93	25.07	0.34	0.16	0.2	0.70
40	V13	V21		x	48.11	5.64	3.73	16.33	0.34	0.16	0.2	0.70
41	V14	V22		x	21.94	5.64	2.16	14.12	0.34	0.16	0.2	0.70
42	V15	V23		x	49.34	5.64	4.07	16.81	0.34	0.16	0.2	0.70
43	V16	V24		x	48.67	5.64	4.37	17.23	0.34	0.16	0.2	0.70
44	V17	V18		x	57.59	9.96	7.41	11.95	0.0	1.0	0.5	1.50
45	V17	V20		x	69.73	10.82	5.88	12.98	0.0	1.0	0.5	1.50
46	V18	V19		x	38.11	12.4	5.35	14.88	0.0	1.0	0.5	1.50
47	V19	V20		x	61.30	12.67	7.93	15.2	0.0	1.0	0.5	1.50

Table A-2 Steam Generator Compartment Vent Path Description

A. Break Type : RHR pump inlet line(10B) guillotine break
Break Area : 0.788(ft^2)
Break location : Volume number 16

Vent Path No	Volume No.		Description of Vent Path Flow		Area (ft^2)	Inertia Length (ft)	Hydraulic Diameter (ft)	Friction Length (ft)	Loss Coefficient K			
	From	To	Choked	Unchoked					Turning and Obstruction	Expansion	Contraction	Total
48	V19	V22		x	70.67	12.89	8.4	15.47	0.0	1.0	0.5	1.50
49	V19	V99		x	14.75	16.21	3.73	19.45	3.5	0.0	0.5	4.00
50	V20	V21		x	128.07	7.78	8.31	9.34	0.0	1.0	0.5	1.50
51	V21	V22		x	30.56	14.83	4.61	17.8	0.0	1.0	0.5	1.50
52	V21	V24		x	79.37	14.62	6.27	17.54	0.0	1.0	0.5	1.50
53	V22	V23		x	47.78	16.71	5.7	20.05	0.0	1.0	0.5	1.50
54	V23	V24		x	47.11	14.17	6.68	17	0.0	1.0	0.5	1.50
55	V17	V25		x	33.53	4.82	4.96	16.42	0.34	0.16	0.2	0.70
56	V18	V26		x	29.86	4.82	5.77	17.56	0.34	0.16	0.2	0.70
57	V19	V27		x	62.57	4.82	6.8	19.02	0.34	0.16	0.2	0.70
58	V20	V28		x	60.47	4.82	8.53	21.46	0.34	0.16	0.2	0.70
59	V21	V29		x	79.65	5.39	9.88	23.36	0.34	0.16	0.2	0.70
60	V22	V30		x	59.73	7.26	5.44	17.1	0.34	0.16	0.2	0.70
61	V23	V31		x	110.29	7.96	8.54	9.55	0.0	0.0	0.0	0.00
62	V24	V32		x	83.90	6.76	6.79	19	0.34	0.16	0.2	0.70
63	V25	V26		x	35.33	11.65	4.53	13.98	0.0	1.0	0.5	1.50
64	V25	V28		x	55.78	12.5	7.47	15	0.0	1.0	0.5	1.50
65	V26	V27		x	24.22	13.84	4.57	16.61	0.0	1.0	0.5	1.50
66	V27	V28		x	48.82	14.18	6.51	17.02	0.0	1.0	0.5	1.50
67	V27	V30		x	65.64	12.91	6.38	15.49	0.0	1.0	0.5	1.50
68	V27	V99		x	6.00	15.58	2.4	18.7	3.5	0.0	0.5	4.00
69	V28	V29		x	111.76	7.78	9.86	9.34	0.0	1.0	0.5	1.50
70	V29	V30		x	25.86	14.83	4.78	17.8	0.0	1.0	0.5	1.50
71	V29	V32		x	72.03	14.62	8.38	17.54	0.0	1.0	0.5	1.50

Table A-2 Steam Generator Compartment Vent Path Description

A. Break Type : RHR pump inlet line(10B) guillotine break
Break Area : 0.788(ft^2)
Break location : Volume number 16

Vent Path No	Volume No.		Description of Vent Path Flow		Area (ft^2)	Inertia Length (ft)	Hydraulic Diameter (ft)	Friction Length (ft)	Loss Coefficient K			
	From	To	Choked	Unchoked					Turning and Obstruction	Expansion	Contraction	Total
72	V30	V31		x	40.83	16.71	6.34	20.05	0.0	1.0	0.5	1.50
73	V31	V32		x	33.41	14.17	3.2	17	0.0	1.0	0.5	1.50
~~74~~	~~V32~~	~~V97~~		~~x~~	~~13.17~~	~~9.5~~	~~3.07~~	~~11.4~~	~~0.17~~	~~1.0~~	~~0.5~~	~~1.67~~
75	V25	V33		x	62.52	6.59	6.14	7.91	0.0	0.0	0.0	0.00
76	V26	V34		x	50.81	6.59	5.9	7.91	0.0	0.0	0.0	0.00
77	V27	V35		x	111.57	6.59	9.22	7.91	0.0	0.0	0.0	0.00
78	V28	V36		x	101.10	6.59	8.93	7.91	0.0	0.0	0.0	0.00
79	V29	V37		x	100.49	5.61	9.88	21.72	0.34	0.16	0.2	0.70
80	V30	V38		x	84.55	4	10.72	22.9	0.34	0.16	0.2	0.70
81	V31	V39		x	63.33	4	7.77	18.74	0.34	0.16	0.2	0.70
82	V32	V40		x	79.82	5.08	9.73	21.5	0.34	0.16	0.2	0.70
83	V33	V34		x	56.50	10.89	6.56	13.07	0.0	1.0	0.5	1.50
84	V33	V36		x	72.89	12.5	7.06	15	0.0	1.0	0.5	1.50
85	V34	V35		x	47.64	13.84	6.44	16.61	0.0	1.0	0.5	1.50
86	V35	V36		x	60.24	14.18	7.22	17.02	0.0	1.0	0.5	1.50
87	V35	V38		x	78.91	10.14	8.2	12.17	0.0	1.0	0.5	1.50
88	V36	V37		x	91.21	6.16	8.55	7.39	0.0	1.0	0.5	1.50
89	V37	V38		x	21.11	16.96	4.45	20.35	0.0	1.0	0.5	1.50
90	V37	V40		x	58.79	14.62	7.42	17.54	0.0	1.0	0.5	1.50
91	V38	V39		x	33.32	18.53	5.77	22.24	0.0	1.0	0.5	1.50
92	V39	V40		x	32.19	14.17	5.67	17	0.0	1.0	0.5	1.50
~~93~~	~~V39~~	~~V97~~		~~x~~	~~11.81~~	~~8.02~~	~~2.99~~	~~9.62~~	~~0.17~~	~~1.0~~	~~0.5~~	~~1.67~~
94	V33	V41		x	83.14	5.38	8.15	6.46	0.0	0.0	0.0	0.00
95	V34	V42		x	71.41	5.38	8.28	6.46	0.0	0.0	0.0	0.00

Table A-2 Steam Generator Compartment Vent Path Description

A. Break Type : RHR pump inlet line(10B) guillotine break
Break Area : 0.788(ft^2)
Break location : Volume number 16

Vent Path No	Volume No.		Description of Vent Path Flow		Area (ft^2)	Inertia Length (ft)	Hydraulic Diameter (ft)	Friction Length (ft)	Loss Coefficient K			
	From	To	Choked	Unchoked					Turning and Obstruction	Expansion	Contraction	Total
96	V35	V43		x	84.57	5.38	9.02	6.46	0.0	0.0	0.0	0.00
97	V36	V44		x	60.77	5.38	6.61	6.46	0.0	0.0	0.0	0.00
98	V37	V45		x	55.70	5.38	6.43	6.46	0.0	0.0	0.0	0.00
99	V38	V46		x	105.41	5.38	8.78	6.46	0.0	0.0	0.0	0.00
100	V39	V47		x	99.31	5.38	6.57	6.46	0.0	0.0	0.0	0.00
101	V40	V48		x	57.32	5.38	7.19	6.46	0.0	0.0	0.0	0.00
102	V41	V42		x	47.93	7.47	6.39	8.96	0.0	1.0	0.5	1.50
103	V41	V44		x	59.38	8.62	6.58	10.34	0.0	1.0	0.5	1.50
104	V42	V43		x	42.87	8.22	6.26	9.86	0.0	1.0	0.5	1.50
105	V43	V44		x	32.72	7.05	5.64	8.46	0.0	1.0	0.5	1.50
106	V45	V46		x	17.24	15.05	4.1	18.06	0.0	1.0	0.5	1.50
107	V45	V48		x	18.64	11.81	4.29	14.17	0.0	1.0	0.5	1.50
108	V46	V47		x	20.90	17.36	2.8	20.83	0.0	1.0	0.5	1.50
109	V47	V48		x	26.29	13.78	5.12	16.54	0.0	1.0	0.5	1.50
~~110~~	~~V47~~	~~V97~~		~~x~~	~~1.33~~	~~8.02~~	~~1~~	~~9.62~~	~~0.17~~	~~1.0~~	~~0.5~~	~~1.67~~
111	V41	V99		x	42.73	2.42	6.39	2.9	0.94	1.0	0.25	2.19
112	V42	V99		x	64.61	2.42	8.11	2.9	0.43	1.0	0.05	1.48
113	V43	V99		x	82.76	2.42	9.21	2.9	0.23	1.0	0.02	1.25
114	V44	V99		x	30.65	2.42	5.45	2.9	0.95	1.0	0.25	2.2
115	V45	V49		x	33.42	4.69	6.43	18.24	0.34	0.16	0.2	0.70
116	V46	V50		x	63.25	4.69	8.78	21.56	0.34	0.16	0.2	0.70
117	V47	V51		x	65.41	4.69	8.49	21.15	0.34	0.16	0.2	0.70
118	V48	V52		x	34.39	4.69	7.19	19.31	0.34	0.16	0.2	0.70
119	V49	V50		x	26.26	16.93	3.69	20.32	0.0	1.0	0.5	1.50

Table A-2 Steam Generator Compartment Vent Path Description

A. Break Type : RHR pump inlet line(10B) guillotine break
Break Area : 0.788(ft^2)
Break location : Volume number 16

Vent Path No	Volume No.		Description of Vent Path Flow		Area (ft^2)	Inertia Length (ft)	Hydraulic Diameter (ft)	Friction Length (ft)	Loss Coefficient K			
	From	To	Choked	Unchoked					Turning and Obstruction	Expansion	Contraction	Total
120	V49	V52		x	25.92	13.28	3.24	15.94	0.0	1.0	0.5	1.50
121	V50	V51		x	44.11	19.24	4.87	23.09	0.0	1.0	0.5	1.50
122	V51	V52		x	46.23	15.23	5.74	18.28	0.0	1.0	0.5	1.50
123	V49	V53		x	17.85	6.64	3.54	18.07	0.34	0.16	0.2	0.70
124	V50	V54		x	43.06	6.64	5.98	21.51	0.34	0.16	0.2	0.70
125	V52	V55		x	22.48	6.64	4.98	20.1	0.34	0.16	0.2	0.70
126	V53	V54		x	15.36	16.93	2.42	20.32	0.0	1.0	0.5	1.50
127	V53	V55		x	18.65	13.28	2.87	15.94	0.0	1.0	0.5	1.50
128	V53	V89		x	8.57	5.22	2.15	13.26	0.34	0.16	0.2	0.70
129	V54	V90		x	36.76	5.22	4.92	17.17	0.34	0.16	0.2	0.70
130	V55	V92		x	13.99	5.22	2.43	13.66	0.34	0.16	0.2	0.70
131	V51	V56		x	4.31	4.8	2.57	13.02	0.34	0.16	0.2	0.70
132	V51	V57		x	5.04	4.8	2.71	13.21	0.34	0.16	0.2	0.70
133	V51	V58		x	8.33	4.8	3.24	13.96	0.34	0.16	0.2	0.70
134	V51	V59		x	1.75	4.79	1.24	11.14	0.34	0.16	0.2	0.70
135	V51	V60		x	3.05	4.8	1.98	12.18	0.34	0.16	0.2	0.70
136	V51	V61		x	3.05	4.8	1.98	12.18	0.34	0.16	0.2	0.70
137	V51	V62		x	7.36	4.8	2.31	12.65	0.34	0.16	0.2	0.70
138	V51	V63		x	7.82	4.8	3.15	13.83	0.34	0.16	0.2	0.70
139	V51	V64		x	4.74	4.8	2.64	13.11	0.34	0.16	0.2	0.70
140	V51	V65		x	4.04	4.8	2.5	12.92	0.34	0.16	0.2	0.70
141	V54	V56		x	17.74	11.1	4.12	13.32	0.0	1.0	0.5	1.50
142	V56	V57		x	18.98	2.1	4.29	2.52	0.0	0.0	0.0	0.00
143	V57	V58		x	22.94	2.56	4.77	3.07	0.0	0.0	0.0	0.00

Table A-2 Steam Generator Compartment Vent Path Description

A. Break Type : RHR pump inlet line(10B) guillotine break
Break Area : 0.788(ft^2)
Break location : Volume number 16

Vent Path No	Volume No.		Description of Vent Path Flow		Area (ft^2)	Inertia Length (ft)	Hydraulic Diameter (ft)	Friction Length (ft)	Loss Coefficient K			
	From	To	Choked	Unchoked					Turning and Obstruction	Expansion	Contraction	Total
144	V58	V59		x	4.79	4.24	1.57	5.09	0.0	0.0	0.0	0.00
145	V58	V60		x	6.95	3.39	2.13	4.07	0.0	0.0	0.0	0.00
146	V58	V61		x	6.95	3.12	2.13	3.74	0.0	0.0	0.0	0.00
147	V58	V62		x	16.47	4.98	3.94	5.98	0.0	0.0	0.0	0.00
148	V59	V60		x	19.70	1.02	4.38	1.22	0.0	0.0	0.0	0.00
149	V60	V61		x	19.70	1.34	4.38	1.61	0.0	0.0	0.0	0.00
150	V61	V62		x	19.70	3.07	4.38	3.68	0.0	0.0	0.0	0.00
151	V59	V63		x	4.79	4.13	1.57	4.96	0.0	0.0	0.0	0.00
152	V60	V63		x	6.95	3.28	2.13	3.94	0.0	0.0	0.0	0.00
153	V61	V63		x	6.95	3.14	2.13	3.77	0.0	0.0	0.0	0.00
154	V62	V63		x	15.06	5	3.72	6	0.0	0.0	0.0	0.00
155	V63	V64		x	21.86	2.52	4.65	3.02	0.0	0.0	0.0	0.00
156	V64	V65		x	17.96	2.08	4.15	2.5	0.0	0.0	0.0	0.00
157	V65	V55		x	16.75	7.1	3.98	8.52	0.0	1.0	0.5	1.50
158	V56	V66		x	7.19	4.5	2.57	5.4	0.0	0.0	0.0	0.00
159	V57	V67		x	8.40	4.5	2.71	5.4	0.0	0.0	0.0	0.00
160	V58	V68		x	7.63	4.5	2.65	5.4	0.0	0.0	0.0	0.00
161	V58	V69		x	6.25	4.5	2.19	5.4	0.0	0.0	0.0	0.00
162	V59	V70		x	2.92	4.5	1.24	5.4	0.0	0.0	0.0	0.00
163	V60	V71		x	5.08	4.5	1.98	5.4	0.0	0.0	0.0	0.00
164	V61	V72		x	5.08	4.5	1.98	5.4	0.0	0.0	0.0	0.00
165	V62	V73		x	5.30	4.5	1.19	5.4	0.0	0.0	0.0	0.00
166	V62	V74		x	6.97	4.5	2.55	5.4	0.0	0.0	0.0	0.00
167	V63	V75		x	7.63	4.5	2.65	5.4	0.0	0.0	0.0	0.00

Table A-2 Steam Generator Compartment Vent Path Description

A. Break Type : RHR pump inlet line(10B) guillotine break
Break Area : 0.788(ft^2)
Break location : Volume number 16

Vent Path No	Volume No.		Description of Vent Path Flow		Area (ft^2)	Inertia Length (ft)	Hydraulic Diameter (ft)	Friction Length (ft)	Loss Coefficient K			
	From	To	Choked	Unchoked					Turning and Obstruction	Expansion	Contraction	Total
168	V63	V76		x	5.41	4.5	2	5.4	0.0	0.0	0.0	0.00
169	V64	V77		x	7.90	4.5	2.64	5.4	0.0	0.0	0.0	0.00
170	V65	V78		x	6.73	4.5	2.5	5.4	0.0	0.0	0.0	0.00
171	V54	V66		x	12.95	11.1	3.59	13.32	0.0	1.0	0.5	1.50
172	V66	V67		x	13.85	2.1	3.72	2.52	0.0	0.0	0.0	0.00
173	V67	V68		x	13.36	2.16	3.65	2.59	0.0	0.0	0.0	0.00
174	V67	V69		x	3.38	4.08	1.44	4.9	0.0	0.0	0.0	0.00
175	V68	V69		x	10.99	2.73	3.29	3.28	0.0	0.0	0.0	0.00
176	V68	V70		x	3.49	3.39	1.48	4.07	0.0	0.0	0.0	0.00
177	V68	V71		x	5.07	2.97	1.98	3.56	0.0	0.0	0.0	0.00
178	V68	V72		x	5.07	3.67	1.98	4.4	0.0	0.0	0.0	0.00
179	V69	V73		x	8.12	3.45	2.74	4.14	0.0	0.0	0.0	0.00
180	V69	V74		x	3.90	4.6	1.62	5.52	0.0	0.0	0.0	0.00
181	V70	V71		x	8.09	1.02	1.34	1.22	0.0	0.0	0.0	0.00
182	V71	V72		x	11.54	1.34	2.18	1.61	0.0	0.0	0.0	0.00
183	V72	V73		x	11.54	1.74	2.18	2.09	0.0	0.0	0.0	0.00
184	V70	V75		x	3.49	3.39	1.48	4.07	0.0	0.0	0.0	0.00
185	V71	V75		x	5.07	2.97	1.98	3.56	0.0	0.0	0.0	0.00
186	V72	V75		x	5.07	3.67	1.98	4.4	0.0	0.0	0.0	0.00
187	V73	V74		x	9.36	2.4	1.87	2.88	0.0	0.0	0.0	0.00
188	V73	V76		x	8.12	3.47	2.74	4.16	0.0	0.0	0.0	0.00
189	V74	V76		x	2.87	4.62	1.26	5.54	0.0	0.0	0.0	0.00
190	V75	V76		x	10.99	2.62	3.29	3.14	0.0	0.0	0.0	0.00
191	V75	V77		x	13.36	2.14	3.65	2.57	0.0	0.0	0.0	0.00

Table A-2 Steam Generator Compartment Vent Path Description

A. Break Type : RHR pump inlet line(10B) guillotine break
Break Area : 0.788(ft^2)
Break location : Volume number 16

Vent Path No	Volume No.		Description of Vent Path Flow		Area (ft^2)	Inertia Length (ft)	Hydraulic Diameter (ft)	Friction Length (ft)	Loss Coefficient K			
	From	To	Choked	Unchoked					Turning and Obstruction	Expansion	Contraction	Total
192	V76	V77		x	2.60	4.04	1.16	4.85	0.0	0.0	0.0	0.00
193	V77	V78		x	13.11	2.08	3.62	2.5	0.0	0.0	0.0	0.00
194	V78	V55		x	12.22	7.1	3.48	8.52	0.0	1.0	0.5	1.50
195	V66	V79		x	7.19	3.07	2.57	3.68	0.0	0.0	0.0	0.00
196	V67	V80		x	8.40	3.07	2.71	3.68	0.0	0.0	0.0	0.00
197	V68	V81		x	7.63	3.07	2.65	3.68	0.0	0.0	0.0	0.00
198	V69	V81		x	6.25	3.07	2.19	3.68	0.0	0.0	0.0	0.00
199	V70	V82		x	2.92	3.07	1.24	3.68	0.0	0.0	0.0	0.00
200	V71	V83		x	5.08	3.07	1.98	3.68	0.0	0.0	0.0	0.00
201	V72	V84		x	5.08	3.07	1.98	3.68	0.0	0.0	0.0	0.00
202	V73	V85		x	8.14	3.07	2.74	3.68	0.0	0.0	0.0	0.00
203	V74	V85		x	6.97	3.07	2.55	3.68	0.0	0.0	0.0	0.00
204	V75	V86		x	7.63	3.07	2.65	3.68	0.0	0.0	0.0	0.00
205	V76	V86		x	5.41	3.07	2	3.68	0.0	0.0	0.0	0.00
206	V77	V87		x	7.90	3.07	2.64	3.68	0.0	0.0	0.0	0.00
207	V78	V88		x	6.73	3.07	2.5	3.68	0.0	0.0	0.0	0.00
208	V54	V79		x	8.05	11.1	2.79	13.32	0.0	1.0	0.5	1.50
209	V79	V80		x	8.61	2.1	2.86	2.52	0.0	0.0	0.0	0.00
210	V80	V81		x	10.41	2.56	3.07	3.07	0.0	0.0	0.0	0.00
211	V81	V82		x	2.17	4.24	1.32	5.09	0.0	0.0	0.0	0.00
212	V81	V83		x	3.15	3.39	1.71	4.07	0.0	0.0	0.0	0.00
213	V81	V84		x	3.15	3.12	1.71	3.74	0.0	0.0	0.0	0.00
214	V81	V85		x	7.47	4.98	2.7	5.98	0.0	0.0	0.0	0.00
215	V82	V83		x	8.94	1.02	2.91	1.22	0.0	0.0	0.0	0.00

Table A-2 Steam Generator Compartment Vent Path Description

A. Break Type : RHR pump inlet line(10B) guillotine break
Break Area : 0.788(ft^2)
Break location : Volume number 16

Vent Path No	Volume No.		Description of Vent Path Flow		Area (ft^2)	Inertia Length (ft)	Hydraulic Diameter (ft)	Friction Length (ft)	Loss Coefficient K			
	From	To	Choked	Unchoked					Turning and Obstruction	Expansion	Contraction	Total
216	V83	V84		x	8.94	1.34	2.91	1.61	0.0	0.0	0.0	0.00
217	V84	V85		x	8.94	3.07	2.91	3.68	0.0	0.0	0.0	0.00
218	V82	V86		x	2.17	4.13	1.32	4.96	0.0	0.0	0.0	0.00
219	V83	V86		x	3.15	3.28	1.71	3.94	0.0	0.0	0.0	0.00
220	V84	V86		x	3.15	3.14	1.71	3.77	0.0	0.0	0.0	0.00
221	V85	V86		x	65.64	5	24.98	6	0.0	0.0	0.0	0.00
222	V86	V87		x	9.92	2.52	3.02	3.02	0.0	0.0	0.0	0.00
223	V87	V88		x	8.15	2.08	2.8	2.5	0.0	0.0	0.0	0.00
224	V88	V55		x	7.60	7.1	2.72	8.52	0.0	1.0	0.5	1.50
225	V79	V91		x	2.16	2.52	1.83	7.41	0.34	0.16	0.2	0.70
226	V80	V91		x	2.55	2.52	1.36	6.75	0.34	0.16	0.2	0.70
227	V81	V91		x	6.35	3.35	1.72	7.26	0.34	0.16	0.2	0.70
228	V82	V91		x	1.75	2.52	1.24	6.58	0.34	0.16	0.2	0.70
229	V83	V91		x	3.05	2.52	1.98	7.62	0.34	0.16	0.2	0.70
230	V84	V91		x	3.22	3.44	1.71	7.24	0.34	0.16	0.2	0.70
231	V85	V91	x		6.77	4.13	1.56	4.96	0.0	0.0	0.0	0.00
232	V86	V91		x	9.29	2.97	3.15	9.27	0.34	0.16	0.2	0.70
233	V87	V91		x	4.74	2.52	2.64	8.55	0.34	0.16	0.2	0.70
234	V88	V91		x	2.77	2.52	1.7	7.23	0.34	0.16	0.2	0.70
235	V89	V90		x	8.02	16.93	2.21	20.32	0.0	1.0	0.5	1.50
236	V89	V92		x	9.74	12.59	2.58	15.11	0.0	1.0	0.5	1.50
237	V89	V99		x	13.23	11.34	3.25	13.61	0.0	1.0	0.5	1.50
238	V89	V99		x	27.82	5.99	4.02	7.19	0.0	1.0	0.5	1.50
239	V89	V99		x	36.11	8.4	5.57	10.08	0.0	1.0	0.5	1.50

Table A-2 Steam Generator Compartment Vent Path Description

A. Break Type : RHR pump inlet line(10B) guillotine break
Break Area : 0.788(ft^2)
Break location : Volume number 16

Vent Path No	Volume No.		Description of Vent Path Flow		Area (ft^2)	Inertia Length (ft)	Hydraulic Diameter (ft)	Friction Length (ft)	Loss Coefficient K			
	From	To	Choked	Unchoked					Turning and Obstruction	Expansion	Contraction	Total
240	V90	V91		x	16.16	19.24	2.91	23.09	0.0	1.0	0.5	1.50
241	V90	V99		x	46.62	10.29	6.2	12.35	0.0	1.0	0.5	1.50
242	V90	V99		x	26.61	5.87	4.65	7.04	0.0	1.0	0.5	1.50
243	V91	V92		x	14.58	15.23	2.62	18.28	0.0	1.0	0.5	1.50
244	V92	V99		x	45.84	6.21	5.38	7.45	0.0	1.0	0.5	1.50
245	V89	V93		x	17.85	5.12	3.54	15.02	0.34	0.16	0.2	0.70
246	V90	V94		x	43.06	5.12	5.98	18.46	0.34	0.16	0.2	0.70
247	V91	V95		x	62.67	6.24	7.68	20.86	0.34	0.16	0.2	0.70
248	V92	V96		x	22.48	5.12	4.98	17.05	0.34	0.16	0.2	0.70
249	V93	V94		x	14.91	16.93	2.41	20.32	0.0	1.0	0.5	1.50
250	V93	V96		x	18.10	12.59	2.86	15.11	0.0	1.0	0.5	1.50
251	V93	V99		x	24.59	11.34	3.72	13.61	0.0	1.0	0.5	1.50
252	V93	V99		x	87.07	5.99	9.21	7.19	0.0	1.0	0.5	1.50
253	V93	V99		x	77.44	8.4	8.59	10.08	0.0	1.0	0.5	1.50
254	V94	V95		x	37.61	19.24	5.22	23.09	0.0	1.0	0.5	1.50
255	V94	V99		x	100.40	10.29	9.98	12.35	0.0	1.0	0.5	1.50
256	V94	V99		x	90.07	5.87	9.39	7.04	0.0	1.0	0.5	1.50
257	V95	V96		x	35.51	15.23	4.99	18.28	0.0	1.0	0.5	1.50
258	V96	V99		x	95.07	6.21	9.68	7.45	0.0	1.0	0.5	1.50
259	V93	V99		x	29.75	5.5	3.54	6.6	0.0	1.0	0.0	1.00
260	V94	V99		x	71.76	5.5	5.98	6.6	0.0	1.0	0.0	1.00
261	V95	V99		x	74.61	5.5	6.03	6.6	0.0	1.0	0.0	1.00
262	V96	V99		x	37.46	5.5	4.98	6.6	0.0	1.0	0.0	1.00

Table A-3 Mass and Energy Release Rates for Steam Generator Compartment Peak Pressure Analyses

A. Break Type : RHR pump inlet line(10B) guillotine break
Break Area : 0.788(ft^2)
Break location : Volume number 16

*Mass Release Rate was doubled from the following value for guillotine break.

Time (s)	Mass Release Rate* (lbm/s)	Enthalpy (BTU/lbm)
0	0	643.125
0.001	3924.77	643.125
0.002	3714.69	643.206
0.003	3894.44	642.847
0.004	4434.31	642.507
0.005	6355.1	643.359
0.006	6184.88	643.343
0.007	6197.05	643.434
0.008	6370.46	643.635
0.009	6571.7	643.847
0.01	6711.53	644.001
0.011	6801.25	644.104
0.012	6925.5	644.232
0.013	7164.33	644.459
0.014	7520.33	644.799
0.015	7906.86	645.182
0.016	8199.72	645.487
0.017	8315.7	645.619
0.018	8259.25	645.576
0.019	8106.68	645.434
0.02	7951.43	645.291
0.021	7850.23	645.201
0.022	7797.11	645.16
0.023	7737.3	645.112
0.024	7611.86	645.002
0.025	7402.67	644.814
0.026	7149.77	644.589
0.027	6930.72	644.399
0.028	6820.36	644.307
0.029	6852.92	644.341
0.03	7004.81	644.483
0.031	7207.54	644.674
0.032	7389.07	644.852
0.033	7510.41	644.975
0.034	7575.99	645.047
0.035	7615.17	645.094
0.036	7652.34	645.138
0.037	7687.04	645.181
0.038	7695.58	645.198
0.039	7651.22	645.164

Table A-3 Mass and Energy Release Rates for Steam Generator Compartment Peak Pressure Analyses

A. Break Type : RHR pump inlet line(10B) guillotine break
Break Area : 0.788(ft^2)
Break location : Volume number 16

*Mass Release Rate was doubled from the following value for guillotine break.

Time (s)	Mass Release Rate* (lbm/s)	Enthalpy (BTU/lbm)
0.04	7547.33	645.073
0.041	7407.21	644.947
0.042	7274.42	644.83
0.043	7190.03	644.758
0.044	7170.08	644.746
0.045	7197.02	644.778
0.046	7231.15	644.817
0.047	7235.54	644.828
0.048	7198.58	644.801
0.049	7140.08	644.754
0.05	7098.38	644.722
0.051	7106.71	644.736
0.052	7172.66	644.803
0.053	7272.39	644.904
0.054	7363.13	644.997
0.055	7406.42	645.047
0.056	7387.74	645.037
0.057	7321.4	644.981
0.058	7239.76	644.91
0.059	7174.86	644.855
0.06	7142.79	644.831
0.061	7138.58	644.834
0.062	7143.28	644.845
0.063	7138.06	644.846
0.064	7116.34	644.832
0.065	7086.91	644.811
0.066	7067.34	644.799
0.067	7072.35	644.809
0.068	7104.38	644.845
0.069	7151.6	644.895
0.07	7193.99	644.942
0.071	7213.43	644.967
0.072	7201.66	644.962
0.073	7162.03	644.931
0.074	7105.26	644.883
0.075	7042.76	644.83
0.076	6981.63	644.779
0.077	6923.83	644.731
0.078	6869.06	644.685
0.079	6818.72	644.644
0.08	6778.01	644.612

Table A-3 Mass and Energy Release Rates for Steam Generator Compartment Peak Pressure Analyses

A. Break Type : RHR pump inlet line(10B) guillotine break
Break Area : 0.788(ft^2)
Break location : Volume number 16

*Mass Release Rate was doubled from the following value for guillotine break.

Time (s)	Mass Release Rate* (lbm/s)	Enthalpy (BTU/lbm)
0.081	6754.73	644.595
0.082	6755.61	644.601
0.083	6782.35	644.63
0.084	6829.97	644.678
0.085	6888.09	644.737
0.086	6944.42	644.794
0.087	6988.27	644.841
0.088	7012.38	644.869
0.089	7012.73	644.875
0.09	6987.73	644.856
0.091	6937.84	644.815
0.092	6866.5	644.754
0.093	6781.42	644.68
0.094	6695.03	644.605
0.095	6622.31	644.543
0.096	6576.97	644.506
0.097	6566.91	644.5
0.098	6591.26	644.526
0.099	6640.71	644.575
0.1	6701.05	644.634
0.101	6758.52	644.691
0.102	6804	644.738
0.103	6834.45	644.771
0.104	6851.13	644.791
0.105	6856.49	644.8
0.106	6851.58	644.8
0.107	6835.66	644.79
0.108	6807.84	644.769
0.109	6769.28	644.737
0.11	6724.51	644.7
0.111	6680.59	644.664
0.112	6644.63	644.634
0.113	6620.95	644.616
0.114	6609.56	644.61
0.115	6607.02	644.611
0.116	6608.97	644.616
0.117	6613.1	644.624
0.118	6620.6	644.634
0.119	6635.36	644.652
0.12	6661.24	644.679
0.121	6699.01	644.718

Table A-3 Mass and Energy Release Rates for Steam Generator Compartment Peak Pressure Analyses

A. Break Type : RHR pump inlet line(10B) guillotine break
Break Area : 0.788(ft^2)
Break location : Volume number 16

*Mass Release Rate was doubled from the following value for guillotine break.

Time (s)	Mass Release Rate* (lbm/s)	Enthalpy (BTU/lbm)
0.122	6744.59	644.764
0.123	6789.68	644.81
0.124	6824.59	644.847
0.125	6841.78	644.867
0.126	6838.62	644.868
0.127	6818.1	644.853
0.128	6787.39	644.828
0.129	6755.06	644.802
0.13	6728.07	644.78
0.131	6709.64	644.767
0.132	6698.58	644.76
0.133	6690.15	644.756
0.134	6677.99	644.748
0.135	6656.57	644.732
0.136	6623.18	644.704
0.137	6579.19	644.667
0.138	6530.1	644.625
0.139	6484.26	644.587
0.14	6450.89	644.559
0.141	6437.57	644.55
0.142	6448	644.562
0.143	6480.6	644.594
0.144	6528.51	644.641
0.145	6581.14	644.693
0.146	6626.61	644.738
0.147	6654.58	644.767
0.148	6658.41	644.774
0.149	6636.34	644.757
0.15	6591.42	644.719
0.151	6530.57	644.666
0.152	6463.24	644.607
0.153	6399.4	644.552
0.154	6347.8	644.508
0.155	6314.21	644.48
0.156	6300.32	644.47
0.157	6303.45	644.475
0.158	6317.25	644.49
0.159	6333.49	644.507
0.16	6344.5	644.519
0.161	6345.39	644.523
0.162	6335.39	644.516

Table A-3 Mass and Energy Release Rates for Steam Generator Compartment Peak Pressure Analyses

A. Break Type : RHR pump inlet line(10B) guillotine break
Break Area : 0.788(ft^2)
Break location : Volume number 16

*Mass Release Rate was doubled from the following value for guillotine break.

Time (s)	Mass Release Rate* (lbm/s)	Enthalpy (BTU/lbm)
0.163	6317.84	644.503
0.164	6298.74	644.488
0.165	6284.46	644.477
0.166	6279.39	644.475
0.167	6284.47	644.482
0.168	6296.9	644.495
0.169	6311.32	644.51
0.17	6321.72	644.522
0.171	6323.53	644.526
0.172	6314.98	644.521
0.173	6297.5	644.508
0.174	6274.9	644.49
0.175	6252.06	644.471
0.176	6233.29	644.457
0.177	6221.24	644.448
0.178	6216.42	644.446
0.179	6217.44	644.449
0.18	6221.78	644.455
0.181	6226.82	644.461
0.182	6230.59	644.467
0.183	6232.22	644.47
0.184	6231.9	644.472
0.185	6230.61	644.473
0.186	6229.65	644.474
0.187	6230.21	644.477
0.188	6232.99	644.481
0.189	6237.97	644.488
0.19	6244.32	644.495
0.191	6250.42	644.503
0.192	6253.96	644.508
0.193	6252.36	644.509
0.194	6243.2	644.503
0.195	6224.88	644.489
0.196	6197.15	644.466
0.197	6161.41	644.436
0.198	6120.67	644.401
0.199	6079.09	644.366
0.2	6041.26	644.334
0.205	6007.95	644.311
0.21	6092.3	644.395
0.215	6003.89	644.328

Table A-3 Mass and Energy Release Rates for Steam Generator Compartment Peak Pressure Analyses

A. Break Type : RHR pump inlet line(10B) guillotine break
Break Area : 0.788(ft^2)
Break location : Volume number 16

*Mass Release Rate was doubled from the following value for guillotine break.

Time (s)	Mass Release Rate* (lbm/s)	Enthalpy (BTU/lbm)
0.22	5957.04	644.291
0.225	5983.72	644.323
0.23	5954.8	644.306
0.235	5931.79	644.293
0.24	5871.9	644.248
0.245	5878.77	644.26
0.25	5943.64	644.324
0.255	5914.97	644.309
0.26	5824.07	644.237
0.265	5823.15	644.242
0.27	5867.14	644.288
0.275	5853.22	644.285
0.28	5830.14	644.272
0.285	5860.69	644.305
0.29	5864.96	644.318
0.295	5832.63	644.298
0.3	5795.11	644.274
0.305	5784.87	644.271
0.31	5822.53	644.311
0.315	5842.16	644.337
0.32	5828.79	644.335
0.325	5805.13	644.322
0.33	5780.29	644.309
0.335	5730.34	644.273
0.34	5686.21	644.242
0.345	5669.19	644.234
0.35	5648.01	644.221
0.355	5632.66	644.214
0.36	5620.38	644.209
0.365	5613.4	644.208
0.37	5626.99	644.226
0.375	5636.05	644.241
0.38	5623.47	644.238
0.385	5601.61	644.227
0.39	5579.59	644.215
0.395	5553.03	644.198
0.4	5523.06	644.179
0.405	5506.47	644.17
0.41	5508.74	644.177
0.415	5519.38	644.193
0.42	5523.02	644.204

Table A-3 Mass and Energy Release Rates for Steam Generator Compartment Peak Pressure Analyses

A. Break Type : RHR pump inlet line(10B) guillotine break
Break Area : 0.788(ft^2)
Break location : Volume number 16

*Mass Release Rate was doubled from the following value for guillotine break.

Time (s)	Mass Release Rate* (lbm/s)	Enthalpy (BTU/lbm)
0.425	5516.29	644.206
0.43	5518.39	644.216
0.435	5534.79	644.239
0.44	5548.56	644.261
0.445	5557.75	644.279
0.45	5566.92	644.298
0.455	5573.01	644.315
0.46	5575.76	644.329
0.465	5574.79	644.34
0.47	5554.95	644.356
0.475	5516.92	644.363
0.48	5468.65	644.36
0.485	5412.64	644.35
0.49	5364.2	644.344
0.495	5332.96	644.35
0.5	5314.69	644.365
0.6	4941.09	644.528
0.7	4824.3	644.792
0.8	4804.23	645.078
0.9	4767.53	645.356
1	4797	645.666
1.1	4770.03	645.923
1.2	4785.66	646.195
1.3	4771.29	646.418
1.4	4770.16	646.631
1.5	4767.67	646.809
1.6	4763.15	646.965
1.7	4759.19	647.095
1.8	4757.5	647.204
1.9	4755.11	647.292
2	4751.54	647.358
2.1	4748.17	647.404
2.2	4744.78	647.432
2.3	4741.21	647.442
2.4	4737.75	647.436
2.5	4734.29	647.415
2.6	4731.18	647.382
2.7	4727.39	647.338
2.8	4723.98	647.284
2.9	4720.96	647.224
3	4718.55	647.159

Table A-3 Mass and Energy Release Rates for Steam Generator Compartment Peak Pressure Analyses

A. Break Type : RHR pump inlet line(10B) guillotine break
Break Area : 0.788(ft^2)
Break location : Volume number 16

*Mass Release Rate was doubled from the following value for guillotine break.

Time (s)	Mass Release Rate* (lbm/s)	Enthalpy (BTU/lbm)
3.1	4717.97	647.094
3.2	4717.88	647.03
3.3	4718.22	646.967
3.4	4717.09	646.901
3.5	4715.67	646.832
3.6	4713.91	646.761
3.7	4711.92	646.689
3.8	4709.75	646.619
3.9	4707.46	646.552
4	4705.21	646.489
4.1	4702.57	646.429
4.2	4699.83	646.373
4.3	4696.85	646.319
4.4	4693.03	646.266
4.5	4689.82	646.213
4.6	4686.61	646.161
4.7	4683.04	646.109
4.8	4679.07	646.056
4.9	4674.69	646.001
5	4670.04	645.944
5.1	4664.94	645.885
5.2	4659.55	645.823
5.3	4653.91	645.759
5.4	4647.97	645.693
5.5	4641.75	645.625
5.6	4635.22	645.554
5.7	4627.95	645.482
5.8	4620.62	645.408
5.9	4613.68	645.336
6	4606.17	645.264
6.1	4598.36	645.195
6.2	4590.31	645.127
6.3	4582.14	645.059
6.4	4573.93	644.992
6.5	4565.75	644.925
6.6	4557.64	644.859
6.7	4549.71	644.794
6.8	4541.91	644.73
6.9	4534.28	644.666
7	4526.77	644.604
7.1	4519.28	644.542

Table A-3 Mass and Energy Release Rates for Steam Generator Compartment Peak Pressure Analyses

A. Break Type : RHR pump inlet line(10B) guillotine break
Break Area : 0.788(ft^2)
Break location : Volume number 16

*Mass Release Rate was doubled from the following value for guillotine break.

Time (s)	Mass Release Rate* (lbm/s)	Enthalpy (BTU/lbm)
7.2	4511.79	644.48
7.3	4504.33	644.42
7.4	4496.93	644.36
7.5	4489.72	644.302
7.6	4482.29	644.244
7.7	4475.12	644.188
7.8	4467.98	644.134
7.9	4460.85	644.082
8	4453.74	644.031
8.1	4446.62	643.983
8.2	4439.49	643.936
8.3	4432.33	643.891
8.4	4425.12	643.848
8.5	4417.89	643.807
8.6	4410.69	643.768
8.7	4403.42	643.729
8.8	4396.21	643.693
8.9	4389.17	643.658
9	4379.68	643.62
9.1	4374.77	643.589
9.2	4367.86	643.55
9.3	4360.78	643.518
9.4	4353.67	643.485
9.5	4347.17	643.453
9.6	4340.82	643.419
9.7	4334.4	643.384
9.8	4327.81	643.353
9.9	4321.34	643.324
10	4314.91	643.295

Table A-4 Steam Generator Compartment Nodal Description

B. Break Type : RHR pump outlet line(8B) guillotine break
Break Area : 0.506(ft^2)
Break location : Volume number 9

Volume No.	Description	Height (ft)	Free Volume (ft^3)	Initial Conditions			Calculated Peak Press. Diff. (psid)	Design Peak Press. Diff (psid)	Margin (%)
				Temp. (deg F)	Press. (psia)	Humid. (%)			
1	West quadrant around A-RCP in A-SG compartment:between EL 25'-3" and 36'-5"	11.17	819	120	14.396	0	4.96	18	262.9
2	North quadrant around A-RCP in A-SG compartment:between EL 25'-3" and 36'-5"	11.17	729	120	14.396	0	6.69	18	169.1
3	East quadrant around A-RCP in A-SG compartment:between EL 25'-3" and 36'-5"	11.17	1327	120	14.396	0	3.83	18	370.0
4	South quadrant around A-RCP in A-SG compartment:between EL 25'-3" and 36'-5"	11.17	1133	120	14.396	0	4.03	18	346.7
5	Northwest quadrant around A-SG in A-SG compartment:between EL 25'-3" and 36'-5"	11.17	1503	120	14.396	0	3.66	18	391.8
6	Northeast quadrant around A-SG in A-SG compartment:between EL 25'-3" and 36'-5"	11.17	1835	120	14.396	0	3.68	18	389.1

Table A-4 Steam Generator Compartment Nodal Description

B. Break Type : RHR pump outlet line(8B) guillotine break
Break Area : 0.506(ft^2)
Break location : Volume number 9

Volume No.	Description	Height (ft)	Free Volume (ft^3)	Initial Conditions			Calculated Peak Press. Diff. (psid)	Design Peak Press. Diff (psid)	Margin (%)
				Temp. (deg F)	Press. (psia)	Humid. (%)			
7	Southeast quadrant around A-SG in A-SG compartment:between EL 25'-3" and 36'-5"	11.17	1518	120	14.396	0	4.38	18	311.0
8	Southwest quadrant around A-SG in A-SG compartment:between EL 25'-3" and 36'-5"	11.17	1239	120	14.396	0	4.41	18	308.2
9	West quadrant around A-RCP in A-SG compartment:between EL 36'-5" and 46'-5.08"	10	591	120	14.396	0	12.89	18	39.6
10	North quadrant around A-RCP in A-SG compartment:between EL 36'-5" and 46'-5.08"	10	539	120	14.396	0	6.67	18	169.9
11	East quadrant around A-RCP in A-SG compartment:between EL 36'-5" and 46'-5.08"	10	1125	120	14.396	0	3.67	18	390.5
12	South quadrant around A-RCP in A-SG compartment:between EL 36'-5" and 46'-5.08"	10	967	120	14.396	0	3.83	18	370.0
13	Northwest quadrant around A-SG in A-SG compartment:between EL 36'-5" and 46'-5.08"	10	1126	120	14.396	0	3.64	18	394.5

Table A-4 Steam Generator Compartment Nodal Description

B. Break Type : RHR pump outlet line(8B) guillotine break
Break Area : 0.506(ft^2)
Break location : Volume number 9

Volume No.	Description	Height (ft)	Free Volume (ft^3)	Initial Conditions			Calculated Peak Press. Diff. (psid)	Design Peak Press. Diff (psid)	Margin (%)
				Temp. (deg F)	Press. (psia)	Humid. (%)			
14	Northeast quadrant around A-SG in A-SG compartment:between EL 36'-5" and 46'-5.08"	10	1434	120	14.396	0	4.25	18	323.5
15	Southeast quadrant around A-SG in A-SG compartment:between EL 36'-5" and 46'-5.08"	10	1227	120	14.396	0	4.82	18	273.4
16	Southwest quadrant around A-SG in A-SG compartment:between EL 36'-5" and 46'-5.08"	10	1019	120	14.396	0	4.25	18	323.5
17	West quadrant around A-RCP in A-SG compartment:between EL 46'-5.08" and 55'-1"	8.66	552	120	14.396	0	5.90	18	205.1
18	North quadrant around A-RCP in A-SG compartment:between EL 46'-5.08" and 55'-1"	8.66	461	120	14.396	0	6.36	18	183.0
19	East quadrant around A-RCP in A-SG compartment:between EL 46'-5.08" and 55'-1"	8.66	934	120	14.396	0	3.26	18	452.1
20	South quadrant around A-RCP in A-SG compartment:between EL 46'-5.08" and 55'-1"	8.66	857	120	14.396	0	3.38	18	432.5

Table A-4 Steam Generator Compartment Nodal Description

B. Break Type : RHR pump outlet line(8B) guillotine break
Break Area : 0.506(ft^2)
Break location : Volume number 9

Volume No.	Description	Height (ft)	Free Volume (ft^3)	Initial Conditions			Calculated Peak Press. Diff. (psid)	Design Peak Press. Diff (psid)	Margin (%)
				Temp. (deg F)	Press. (psia)	Humid. (%)			
21	Northwest quadrant around A-SG in A-SG compartment:between EL 46'-5.08" and 55'-1"	8.66	931	120	14.396	0	3.22	18	459.0
22	Northeast quadrant around A-SG in A-SG compartment:between EL 46'-5.08" and 55'-1"	8.66	538	120	14.396	0	2.97	18	506.1
23	Southeast quadrant around A-SG in A-SG compartment:between EL 46'-5.08" and 55'-1"	8.66	918	120	14.396	0	4.15	18	333.7
24	Southwest quadrant around A-SG in A-SG compartment:between EL 46'-5.08" and 55'-1"	8.66	802	120	14.396	0	3.72	18	383.9
25	West quadrant around A-RCP in A-SG compartment:between EL 55'-1" and 62'-4"	7.25	388	120	14.396	0	3.27	10	205.8
26	North quadrant around A-RCP in A-SG compartment:between EL 55'-1" and 62'-4"	7.25	335	120	14.396	0	3.96	10	152.5
27	East quadrant around A-RCP in A-SG compartment:between EL 55'-1" and 62'-4"	7.25	696	120	14.396	0	2.69	10	271.7

Table A-4 Steam Generator Compartment Nodal Description

B. Break Type : RHR pump outlet line(8B) guillotine break
Break Area : 0.506(ft^2)
Break location : Volume number 9

Volume No.	Description	Height (ft)	Free Volume (ft^3)	Initial Conditions			Calculated Peak Press. Diff. (psid)	Design Peak Press. Diff (psid)	Margin (%)
				Temp. (deg F)	Press. (psia)	Humid. (%)			
28	South quadrant around A-RCP in A-SG compartment:between EL 55'-1" and 62'-4"	7.25	702	120	14.396	0	2.88	10	247.2
29	Northwest quadrant around A-SG in A-SG compartment:between EL 55'-1" and 62'-4"	7.25	832	120	14.396	0	2.96	10	237.8
30	Northeast quadrant around A-SG in A-SG compartment:between EL 55'-1" and 62'-4"	7.25	546	120	14.396	0	2.71	10	269.0
31	Southeast quadrant around A-SG in A-SG compartment:between EL 55'-1" and 62'-4"	7.25	631	120	14.396	0	3.71	10	169.5
32	Southwest quadrant around A-SG in A-SG compartment:between EL 55'-1" and 62'-4"	7.25	701	120	14.396	0	3.37	10	196.7
33	West quadrant around A-RCP in A-SG compartment:between EL 62'-4" and 68'-3"	5.92	460	120	14.396	0	2.59	10	286.1
34	North quadrant around A-RCP in A-SG compartment:betweenEL 62'-4" and 68'-3"	5.92	392	120	14.396	0	2.50	10	300.0

Table A-4 Steam Generator Compartment Nodal Description

B. Break Type : RHR pump outlet line(8B) guillotine break
Break Area : 0.506(ft^2)
Break location : Volume number 9

Volume No.	Description	Height (ft)	Free Volume (ft^3)	Initial Conditions			Calculated Peak Press. Diff. (psid)	Design Peak Press. Diff (psid)	Margin (%)
				Temp. (deg F)	Press. (psia)	Humid. (%)			
35	East quadrant around A-RCP in A-SG compartment:between EL 62'-4" and 68'-3"	5.92	755	120	14.396	0	2.53	10	295.3
36	South quadrant around A-RCP in A-SG compartment:between EL 62'-4" and 68'-3"	5.92	669	120	14.396	0	2.70	10	270.4
37	Northwest quadrant around A-SG in A-SG compartment:between EL 62'-4" and 68'-3"	5.92	679	120	14.396	0	3.00	10	233.3
38	Northeast quadrant around A-SG in A-SG compartment:between EL 62'-4" and 68'-3"	5.92	809	120	14.396	0	2.52	10	296.8
39	Southeast quadrant around A-SG in A-SG compartment:between EL 62'-4" and 68'-3"	5.92	602	120	14.396	0	3.38	10	195.9
40	Southwest quadrant around A-SG in A-SG compartment:between EL 62'-4" and 68'-3"	5.92	598	120	14.396	0	3.21	10	211.5
41	West quadrant around A-RCP in A-SG compartment:between EL 68'-3" and 73'-1"	4.83	364	120	14.396	0	2.50	10	300.0

Table A-4 Steam Generator Compartment Nodal Description

B. Break Type : RHR pump outlet line(8B) guillotine break
Break Area : 0.506(ft^2)
Break location : Volume number 9

Volume No.	Description	Height (ft)	Free Volume (ft^3)	Initial Conditions			Calculated Peak Press. Diff. (psid)	Design Peak Press. Diff (psid)	Margin (%)
				Temp. (deg F)	Press. (psia)	Humid. (%)			
42	North quadrant around A-RCP in A-SG compartment:between EL 68'-3" and 73'-1"	4.83	330	120	14.396	0	2.34	10	327.4
43	East quadrant around A-RCP in A-SG compartment:between EL 68'-3" and 73'-1"	4.83	395	120	14.396	0	2.30	10	334.8
44	South quadrant around A-RCP in A-SG compartment:between EL 68'-3" and 73'-1"	4.83	265	120	14.396	0	2.46	10	306.5
45	Northwest quadrant around A-SG in A-SG compartment:between EL 68'-3" and 73'-1"	4.83	261	120	14.396	0	3.02	10	231.1
46	Northeast quadrant around A-SG in A-SG compartment:between EL 68'-3" and 73'-1"	4.83	474	120	14.396	0	2.56	10	290.6
47	Southeast quadrant around A-SG in A-SG compartment:between EL 68'-3" and 73'-1"	4.83	480	120	14.396	0	3.29	10	204.0
48	Southwest quadrant around A-SG in A-SG compartment:between EL 68'-3" and 73'-1"	4.83	269	120	14.396	0	3.22	10	210.6

Table A-4 Steam Generator Compartment Nodal Description

B. Break Type : RHR pump outlet line(8B) guillotine break
Break Area : 0.506(ft^2)
Break location : Volume number 9

Volume No.	Description	Height (ft)	Free Volume (ft^3)	Initial Conditions			Calculated Peak Press. Diff. (psid)	Design Peak Press. Diff (psid)	Margin (%)
				Temp. (deg F)	Press. (psia)	Humid. (%)			
49	Northwest quadrant around A-SG in A-SG compartment:between EL 73'-1" and 83'-9"	10.67	420	120	14.396	0	3.09	10	223.6
50	Northeast quadrant around A-SG in A-SG compartment:between EL 73'-1" and 83'-9"	10.67	888	120	14.396	0	2.50	10	300.0
51	Southeast quadrant around A-SG in A-SG compartment:between EL 73'-1" and 83'-9"	10.67	965	120	14.396	0	2.98	10	235.6
52	Southwest quadrant around A-SG in A-SG compartment:between EL 73'-1" and 83'-9"	10.67	474	120	14.396	0	3.11	10	221.5
53	Northwest quadrant around A-SG in A-SG compartment:between EL 83'-9" and 95'-1"	11.33	327	120	14.396	0	2.34	35	1395.7
54	Northeast quadrant around A-SG in A-SG compartment:between EL 83'-9" and 95'-1"	11.33	789	120	14.396	0	1.83	35	1812.6
55	Southwest quadrant around A-SG in A-SG compartment:between EL 83'-9" and 95'-1"	11.33	412	120	14.396	0	2.29	35	1428.4

Table A-4 Steam Generator Compartment Nodal Description

B. Break Type : RHR pump outlet line(8B) guillotine break
Break Area : 0.506(ft^2)
Break location : Volume number 9

Volume No.	Description	Height (ft)	Free Volume (ft^3)	Initial Conditions			Calculated Peak Press. Diff. (psid)	Design Peak Press. Diff (psid)	Margin (%)
				Temp. (deg F)	Press. (psia)	Humid. (%)			
56	Southeast quadrant around A-SG in A-SG compartment:between EL 83'-9" and 88'-11.28"	5.19	36	120	14.396	0	2.33	35	1402.1
57		5.19	42	120	14.396	0	2.45	35	1328.6
58		5.19	70	120	14.396	0	2.53	35	1283.4
59		5.19	15	120	14.396	0	2.55	-	-
60		5.19	26	120	14.396	0	2.55	-	-
61		5.19	26	120	14.396	0	2.55	-	-
62		5.19	47	120	14.396	0	2.55	35	1272.5
63		5.19	66	120	14.396	0	2.51	35	1294.4
64		5.19	40	120	14.396	0	2.43	35	1340.3
65		5.19	34	120	14.396	0	2.34	35	1395.7
66	Southeast quadrant around A-SG in A-SG compartment:between EL 88'-11.28" and 92'-8.74"	3.79	27	120	14.396	0	2.17	35	1512.9
67		3.79	31	120	14.396	0	2.28	35	1435.1
68		3.79	28	120	14.396	0	2.33	-	-
69		3.79	23	120	14.396	0	2.35	35	1389.4
70		3.79	6	120	14.396	0	2.34	-	-
71		3.79	14	120	14.396	0	2.34	-	-
72		3.79	15	120	14.396	0	2.35	-	-
73		3.79	21	120	14.396	0	2.35	-	-
74		3.79	26	120	14.396	0	2.36	35	1383.1
75		3.79	28	120	14.396	0	2.32	-	-
76		3.79	20	120	14.396	0	2.33	35	1402.1
77		3.79	29	120	14.396	0	2.27	35	1441.9
78		3.79	25	120	14.396	0	2.20	35	1490.9

Table A-4 Steam Generator Compartment Nodal Description

B. Break Type : RHR pump outlet line(8B) guillotine break
Break Area : 0.506(ft^2)
Break location : Volume number 9

Volume No.	Description	Height (ft)	Free Volume (ft^3)	Initial Conditions			Calculated Peak Press. Diff. (psid)	Design Peak Press. Diff (psid)	Margin (%)
				Temp. (deg F)	Press. (psia)	Humid. (%)			
79	Southeast quadrant around A-SG in A-SG compartment:between EL 92'-8.74" and 95'-1"	2.35	17	120	14.396	0	2.08	35	1582.7
80		2.35	19	120	14.396	0	2.16	35	1520.4
81		2.35	32	120	14.396	0	2.19	35	1498.2
82		2.35	7	120	14.396	0	2.17	-	-
83		2.35	12	120	14.396	0	2.17	-	-
84		2.35	12	120	14.396	0	2.17	-	-
85		2.35	35	120	14.396	0	2.17	35	1512.9
86		2.35	30	120	14.396	0	2.15	35	1527.9
87		2.35	18	120	14.396	0	2.12	35	1550.9
88		2.35	15	120	14.396	0	2.09	35	1574.6
89	Northwest quadrant around A-SG in A-SG compartment:between EL 95'-1" and 101'-0"	5.92	143	120	14.396	0	0.15	35	23233.3
90	Northeast quadrant around A-SG in A-SG compartment:between EL 95'-1" and 101'-0"	5.92	388	120	14.396	0	0.54	35	6381.5
91	Southeast quadrant around A-SG in A-SG compartment:between EL 95'-1" and 101'-0"	5.92	445	120	14.396	0	1.53	35	2187.6
92	Southwest quadrant around A-SG in A-SG compartment:between EL 95'-1" and 101'-0"	5.92	194	120	14.396	0	0.42	35	8233.3

Table A-4 Steam Generator Compartment Nodal Description

B. Break Type : RHR pump outlet line(8B) guillotine break
Break Area : 0.506(ft^2)
Break location : Volume number 9

Volume No.	Description	Height (ft)	Free Volume (ft^3)	Initial Conditions			Calculated Peak Press. Diff. (psid)	Design Peak Press. Diff (psid)	Margin (%)
				Temp. (deg F)	Press. (psia)	Humid. (%)			
93	Northwest quadrant around A-SG in A-SG compartment:between EL 101'-0" and 112'-0"	11.00	318	120	14.396	0	0.02	35	174900.0
94	Northeast quadrant around A-SG in A-SG compartment:between EL 101'-0" and 112'-0"	11.00	741	120	14.396	0	0.12	35	29066.7
95	Southeast quadrant around A-SG in A-SG compartment:between EL 101'-0" and 112'-0"	11.00	911	120	14.396	0	0.76	35	4505.3
96	Southwest quadrant around A-SG in A-SG compartment:between EL 101'-0" and 112'-0"	11.00	400	120	14.396	0	0.13	35	26823.1
~~97~~	~~B-SG compartment~~	~~200~~	~~47000~~	~~120~~	~~14.396~~	~~0~~	~~0.00~~	-	-
~~98~~	~~C/V reactor coolant drain tank compartment~~	~~200~~	~~3086~~	~~120~~	~~14.396~~	~~0~~	~~0.00~~	-	-
99	Containment building free volume	200	2790086	120	14.396	0	0.00	-	-

Table A-5 Steam Generator Compartment Vent Path Description

B. Break Type : RHR pump outlet line(8B) guillotine break
Break Area : 0.506(ft^2)
Break location : Volume number 9

Vent Path No.	Volume No.		Description of Vent Path Flow		Area (ft^2)	Inertia Length (ft)	Hydraulic Diameter (ft)	Friction Length (ft)	Loss Coefficient K			
	From	To	Choked	Unchoked					Turning and Obstruction	Expansion	Contraction	Total
1	V1	V2		x	96.72	7.47	8.65	8.96	0.0	1.0	0.5	1.50
2	V1	V4		x	129.70	8.68	9.27	10.42	0.0	1.0	0.5	1.50
~~3~~	~~V1~~	~~V98~~		~~x~~	~~61.86~~	~~7.13~~	~~7.86~~	~~8.56~~	~~0.0~~	~~1.0~~	~~0.5~~	~~1.50~~
4	V2	V3		x	62.97	9.87	3.88	11.84	0.0	1.0	0.5	1.50
5	V3	V4		x	66.68	10.36	4.4	12.43	0.0	1.0	0.5	1.50
6	V3	V6		x	142.53	11.93	10.75	14.32	0.0	1.0	0.5	1.50
7	V3	V99		x	30.94	20.56	5.46	24.67	3.5	0.0	0.5	4.00
8	V4	V5		x	163.80	12.5	10.52	15	0.0	1.0	0.5	1.50
~~9~~	~~V4~~	~~V98~~		~~x~~	~~28.22~~	~~9.32~~	~~4.36~~	~~11.18~~	~~0.0~~	~~1.0~~	~~0.5~~	~~1.50~~
10	V5	V6		x	76.50	11.69	5.8	14.03	0.0	1.0	0.5	1.50
11	V5	V8		x	167.99	10.36	8.33	12.43	0.0	1.0	0.5	1.50
12	V6	V7		x	135.63	13.13	11.64	15.76	0.0	1.0	0.5	1.50
13	V7	V8		x	125.67	9.97	8.05	11.96	0.0	1.0	0.5	1.50
~~14~~	~~V7~~	~~V97~~		~~x~~	~~36.65~~	~~11.06~~	~~5.9~~	~~13.27~~	~~0.84~~	~~1.0~~	~~0.5~~	~~2.34~~
~~15~~	~~V8~~	~~V97~~		~~x~~	~~21.94~~	~~10.86~~	~~4.42~~	~~13.03~~	~~0.45~~	~~1.0~~	~~0.5~~	~~1.95~~
16	V1	V9	x		46.77	6.39	6.4	21.6	0.34	0.16	0.2	0.70
17	V2	V10		x	40.68	6.39	7.91	23.73	0.34	0.16	0.2	0.70
18	V3	V11		x	78.56	6.39	10.96	28.03	0.34	0.16	0.2	0.70
19	V4	V12		x	69.44	6.39	9.44	25.88	0.34	0.16	0.2	0.70
20	V5	V13		x	85.84	6.39	9.36	25.77	0.34	0.16	0.2	0.70
21	V6	V14		x	101.84	6.39	9.09	25.39	0.34	0.16	0.2	0.70
22	V7	V15		x	86.47	6.39	11.12	28.25	0.34	0.16	0.2	0.70
23	V8	V16		x	75.48	6.39	8.8	24.98	0.34	0.16	0.2	0.70

Table A-5 Steam Generator Compartment Vent Path Description

B. Break Type : RHR pump outlet line(8B) guillotine break
Break Area : 0.506(ft^2)
Break location : Volume number 9

Vent Path No.	Volume No.		Description of Vent Path Flow		Area (ft^2)	Inertia Length (ft)	Hydraulic Diameter (ft)	Friction Length (ft)	Loss Coefficient K			
	From	To	Choked	Unchoked					Turning and Obstruction	Expansion	Contraction	Total
24	V9	V10		x	61.42	10.63	6.55	12.76	0.0	1.0	0.5	1.50
25	V9	V12	x		48.55	11.41	2.96	13.69	0.0	1.0	0.5	1.50
26	V10	V11		x	41.34	13.22	5.22	15.86	0.0	1.0	0.5	1.50
27	V11	V12		x	66.03	13.4	6.15	16.08	0.0	1.0	0.5	1.50
28	V11	V14		x	120.32	10.2	10.31	12.24	0.0	1.0	0.5	1.50
29	V12	V13		x	140.68	7.34	9.95	8.81	0.0	1.0	0.5	1.50
30	V13	V14		x	42.11	16.96	3.42	20.35	0.0	1.0	0.5	1.50
31	V13	V16		x	83.03	14.62	4.15	17.54	0.0	1.0	0.5	1.50
32	V14	V15		x	86.90	18.53	7.85	22.24	0.0	1.0	0.5	1.50
33	V15	V16		x	84.52	14.17	7.7	17	0.0	1.0	0.5	1.50
~~34~~	~~V15~~	~~V97~~		~~x~~	~~13.17~~	~~8.66~~	~~3.07~~	~~10.39~~	~~0.17~~	~~1.0~~	~~0.5~~	~~1.67~~
~~35~~	~~V16~~	~~V97~~		~~x~~	~~16.48~~	~~11.58~~	~~3.62~~	~~13.9~~	~~0.26~~	~~1.0~~	~~0.5~~	~~1.76~~
36	V9	V17	x		43.13	5.64	5.91	19.41	0.34	0.16	0.2	0.70
37	V10	V18		x	37.12	5.64	6.72	20.55	0.34	0.16	0.2	0.70
38	V11	V19		x	72.16	5.64	10.22	25.48	0.34	0.16	0.2	0.70
39	V12	V20		x	67.19	5.64	9.93	25.07	0.34	0.16	0.2	0.70
40	V13	V21		x	48.11	5.64	3.73	16.33	0.34	0.16	0.2	0.70
41	V14	V22		x	21.94	5.64	2.16	14.12	0.34	0.16	0.2	0.70
42	V15	V23		x	49.34	5.64	4.07	16.81	0.34	0.16	0.2	0.70
43	V16	V24		x	48.67	5.64	4.37	17.23	0.34	0.16	0.2	0.70
44	V17	V18		x	57.59	9.96	7.41	11.95	0.0	1.0	0.5	1.50
45	V17	V20		x	69.73	10.82	5.88	12.98	0.0	1.0	0.5	1.50
46	V18	V19		x	38.11	12.4	5.35	14.88	0.0	1.0	0.5	1.50
47	V19	V20		x	61.30	12.67	7.93	15.2	0.0	1.0	0.5	1.50

Table A-5 Steam Generator Compartment Vent Path Description

B. Break Type : RHR pump outlet line(8B) guillotine break
Break Area : 0.506(ft^2)
Break location : Volume number 9

Vent Path No.	Volume No.		Description of Vent Path Flow		Area (ft^2)	Inertia Length (ft)	Hydraulic Diameter (ft)	Friction Length (ft)	Loss Coefficient K			
	From	To	Choked	Unchoked					Turning and Obstruction	Expansion	Contraction	Total
48	V19	V22		x	70.67	12.89	8.4	15.47	0.0	1.0	0.5	1.50
49	V19	V99		x	14.75	16.21	3.73	19.45	3.5	0.0	0.5	4.00
50	V20	V21		x	128.07	7.78	8.31	9.34	0.0	1.0	0.5	1.50
51	V21	V22		x	30.56	14.83	4.61	17.8	0.0	1.0	0.5	1.50
52	V21	V24		x	79.37	14.62	6.27	17.54	0.0	1.0	0.5	1.50
53	V22	V23		x	47.78	16.71	5.7	20.05	0.0	1.0	0.5	1.50
54	V23	V24		x	47.11	14.17	6.68	17	0.0	1.0	0.5	1.50
55	V17	V25		x	33.53	4.82	4.96	16.42	0.34	0.16	0.2	0.70
56	V18	V26		x	29.86	4.82	5.77	17.56	0.34	0.16	0.2	0.70
57	V19	V27		x	62.57	4.82	6.8	19.02	0.34	0.16	0.2	0.70
58	V20	V28		x	60.47	4.82	8.53	21.46	0.34	0.16	0.2	0.70
59	V21	V29		x	79.65	5.39	9.88	23.36	0.34	0.16	0.2	0.70
60	V22	V30		x	59.73	7.26	5.44	17.1	0.34	0.16	0.2	0.70
61	V23	V31		x	110.29	7.96	8.54	9.55	0.0	0.0	0.0	0.00
62	V24	V32		x	83.90	6.76	6.79	19	0.34	0.16	0.2	0.70
63	V25	V26		x	35.33	11.65	4.53	13.98	0.0	1.0	0.5	1.50
64	V25	V28		x	55.78	12.5	7.47	15	0.0	1.0	0.5	1.50
65	V26	V27		x	24.22	13.84	4.57	16.61	0.0	1.0	0.5	1.50
66	V27	V28		x	48.82	14.18	6.51	17.02	0.0	1.0	0.5	1.50
67	V27	V30		x	65.64	12.91	6.38	15.49	0.0	1.0	0.5	1.50
68	V27	V99		x	6.00	15.58	2.4	18.7	3.5	0.0	0.5	4.00
69	V28	V29		x	111.76	7.78	9.86	9.34	0.0	1.0	0.5	1.50
70	V29	V30		x	25.86	14.83	4.78	17.8	0.0	1.0	0.5	1.50
71	V29	V32		x	72.03	14.62	8.38	17.54	0.0	1.0	0.5	1.50

Table A-5 Steam Generator Compartment Vent Path Description

B. Break Type : RHR pump outlet line(8B) guillotine break
Break Area : 0.506(ft^2)
Break location : Volume number 9

Vent Path No.	Volume No.		Description of Vent Path Flow		Area (ft^2)	Inertia Length (ft)	Hydraulic Diameter (ft)	Friction Length (ft)	Loss Coefficient K			
	From	To	Choked	Unchoked					Turning and Obstruction	Expansion	Contraction	Total
72	V30	V31		x	40.83	16.71	6.34	20.05	0.0	1.0	0.5	1.50
73	V31	V32		x	33.41	14.17	3.2	17	0.0	1.0	0.5	1.50
~~74~~	~~V32~~	~~V97~~		~~x~~	~~13.17~~	~~9.5~~	~~3.07~~	~~11.4~~	~~0.17~~	~~1.0~~	~~0.5~~	~~1.67~~
75	V25	V33		x	62.52	6.59	6.14	7.91	0.0	0.0	0.0	0.00
76	V26	V34		x	50.81	6.59	5.9	7.91	0.0	0.0	0.0	0.00
77	V27	V35		x	111.57	6.59	9.22	7.91	0.0	0.0	0.0	0.00
78	V28	V36		x	101.10	6.59	8.93	7.91	0.0	0.0	0.0	0.00
79	V29	V37		x	100.49	5.61	9.88	21.72	0.34	0.16	0.2	0.70
80	V30	V38		x	84.55	4	10.72	22.9	0.34	0.16	0.2	0.70
81	V31	V39		x	63.33	4	7.77	18.74	0.34	0.16	0.2	0.70
82	V32	V40		x	79.82	5.08	9.73	21.5	0.34	0.16	0.2	0.70
83	V33	V34		x	56.50	10.89	6.56	13.07	0.0	1.0	0.5	1.50
84	V33	V36		x	72.89	12.5	7.06	15	0.0	1.0	0.5	1.50
85	V34	V35		x	47.64	13.84	6.44	16.61	0.0	1.0	0.5	1.50
86	V35	V36		x	60.24	14.18	7.22	17.02	0.0	1.0	0.5	1.50
87	V35	V38		x	78.91	10.14	8.2	12.17	0.0	1.0	0.5	1.50
88	V36	V37		x	91.21	6.16	8.55	7.39	0.0	1.0	0.5	1.50
89	V37	V38		x	21.11	16.96	4.45	20.35	0.0	1.0	0.5	1.50
90	V37	V40		x	58.79	14.62	7.42	17.54	0.0	1.0	0.5	1.50
91	V38	V39		x	33.32	18.53	5.77	22.24	0.0	1.0	0.5	1.50
92	V39	V40		x	32.19	14.17	5.67	17	0.0	1.0	0.5	1.50
~~93~~	~~V39~~	~~V97~~		~~x~~	~~11.81~~	~~8.02~~	~~2.99~~	~~9.62~~	~~0.17~~	~~1.0~~	~~0.5~~	~~1.67~~
94	V33	V41		x	83.14	5.38	8.15	6.46	0.0	0.0	0.0	0.00
95	V34	V42		x	71.41	5.38	8.28	6.46	0.0	0.0	0.0	0.00

Table A-5 Steam Generator Compartment Vent Path Description

B. Break Type : RHR pump outlet line(8B) guillotine break
Break Area : 0.506(ft^2)
Break location : Volume number 9

Vent Path No.	Volume No.		Description of Vent Path Flow		Area (ft^2)	Inertia Length (ft)	Hydraulic Diameter (ft)	Friction Length (ft)	Loss Coefficient K			
	From	To	Choked	Unchoked					Turning and Obstruction	Expansion	Contraction	Total
96	V35	V43		x	84.57	5.38	9.02	6.46	0.0	0.0	0.0	0.00
97	V36	V44		x	60.77	5.38	6.61	6.46	0.0	0.0	0.0	0.00
98	V37	V45		x	55.70	5.38	6.43	6.46	0.0	0.0	0.0	0.00
99	V38	V46		x	105.41	5.38	8.78	6.46	0.0	0.0	0.0	0.00
100	V39	V47		x	99.31	5.38	6.57	6.46	0.0	0.0	0.0	0.00
101	V40	V48		x	57.32	5.38	7.19	6.46	0.0	0.0	0.0	0.00
102	V41	V42		x	47.93	7.47	6.39	8.96	0.0	1.0	0.5	1.50
103	V41	V44		x	59.38	8.62	6.58	10.34	0.0	1.0	0.5	1.50
104	V42	V43		x	42.87	8.22	6.26	9.86	0.0	1.0	0.5	1.50
105	V43	V44		x	32.72	7.05	5.64	8.46	0.0	1.0	0.5	1.50
106	V45	V46		x	17.24	15.05	4.1	18.06	0.0	1.0	0.5	1.50
107	V45	V48		x	18.64	11.81	4.29	14.17	0.0	1.0	0.5	1.50
108	V46	V47		x	20.90	17.36	2.8	20.83	0.0	1.0	0.5	1.50
109	V47	V48		x	26.29	13.78	5.12	16.54	0.0	1.0	0.5	1.50
~~110~~	~~V47~~	~~V97~~		~~x~~	~~1.33~~	~~8.02~~	~~1~~	~~9.62~~	~~0.17~~	~~1.0~~	~~0.5~~	~~1.67~~
111	V41	V99		x	42.73	2.42	6.39	2.9	0.94	1.0	0.25	2.19
112	V42	V99		x	64.61	2.42	8.11	2.9	0.43	1.0	0.05	1.48
113	V43	V99		x	82.76	2.42	9.21	2.9	0.23	1.0	0.02	1.25
114	V44	V99		x	30.65	2.42	5.45	2.9	0.95	1.0	0.25	2.2
115	V45	V49		x	33.42	4.69	6.43	18.24	0.34	0.16	0.2	0.70
116	V46	V50		x	63.25	4.69	8.78	21.56	0.34	0.16	0.2	0.70
117	V47	V51		x	65.41	4.69	8.49	21.15	0.34	0.16	0.2	0.70
118	V48	V52		x	34.39	4.69	7.19	19.31	0.34	0.16	0.2	0.70
119	V49	V50		x	26.26	16.93	3.69	20.32	0.0	1.0	0.5	1.50

Table A-5 Steam Generator Compartment Vent Path Description

B. Break Type : RHR pump outlet line(8B) guillotine break
Break Area : 0.506(ft^2)
Break location : Volume number 9

Vent Path No.	Volume No.		Description of Vent Path Flow		Area (ft^2)	Inertia Length (ft)	Hydraulic Diameter (ft)	Friction Length (ft)	Loss Coefficient K			
	From	To	Choked	Unchoked					Turning and Obstruction	Expansion	Contraction	Total
120	V49	V52		x	25.92	13.28	3.24	15.94	0.0	1.0	0.5	1.50
121	V50	V51		x	44.11	19.24	4.87	23.09	0.0	1.0	0.5	1.50
122	V51	V52		x	46.23	15.23	5.74	18.28	0.0	1.0	0.5	1.50
123	V49	V53		x	17.85	6.64	3.54	18.07	0.34	0.16	0.2	0.70
124	V50	V54		x	43.06	6.64	5.98	21.51	0.34	0.16	0.2	0.70
125	V52	V55		x	22.48	6.64	4.98	20.1	0.34	0.16	0.2	0.70
126	V53	V54		x	15.36	16.93	2.42	20.32	0.0	1.0	0.5	1.50
127	V53	V55		x	18.65	13.28	2.87	15.94	0.0	1.0	0.5	1.50
128	V53	V89		x	8.57	5.22	2.15	13.26	0.34	0.16	0.2	0.70
129	V54	V90		x	36.76	5.22	4.92	17.17	0.34	0.16	0.2	0.70
130	V55	V92		x	13.99	5.22	2.43	13.66	0.34	0.16	0.2	0.70
131	V51	V56		x	4.31	4.8	2.57	13.02	0.34	0.16	0.2	0.70
132	V51	V57		x	5.04	4.8	2.71	13.21	0.34	0.16	0.2	0.70
133	V51	V58		x	8.33	4.8	3.24	13.96	0.34	0.16	0.2	0.70
134	V51	V59		x	1.75	4.79	1.24	11.14	0.34	0.16	0.2	0.70
135	V51	V60		x	3.05	4.8	1.98	12.18	0.34	0.16	0.2	0.70
136	V51	V61		x	3.05	4.8	1.98	12.18	0.34	0.16	0.2	0.70
137	V51	V62		x	7.36	4.8	2.31	12.65	0.34	0.16	0.2	0.70
138	V51	V63		x	7.82	4.8	3.15	13.83	0.34	0.16	0.2	0.70
139	V51	V64		x	4.74	4.8	2.64	13.11	0.34	0.16	0.2	0.70
140	V51	V65		x	4.04	4.8	2.5	12.92	0.34	0.16	0.2	0.70
141	V54	V56		x	17.74	11.1	4.12	13.32	0.0	1.0	0.5	1.50
142	V56	V57		x	18.98	2.1	4.29	2.52	0.0	0.0	0.0	0.00
143	V57	V58		x	22.94	2.56	4.77	3.07	0.0	0.0	0.0	0.00

Table A-5 Steam Generator Compartment Vent Path Description

B. Break Type : RHR pump outlet line(8B) guillotine break
Break Area : 0.506(ft^2)
Break location : Volume number 9

Vent Path No.	Volume No.		Description of Vent Path Flow		Area (ft^2)	Inertia Length (ft)	Hydraulic Diameter (ft)	Friction Length (ft)	Loss Coefficient K			
	From	To	Choked	Unchoked					Turning and Obstruction	Expansion	Contraction	Total
144	V58	V59		x	4.79	4.24	1.57	5.09	0.0	0.0	0.0	0.00
145	V58	V60		x	6.95	3.39	2.13	4.07	0.0	0.0	0.0	0.00
146	V58	V61		x	6.95	3.12	2.13	3.74	0.0	0.0	0.0	0.00
147	V58	V62		x	16.47	4.98	3.94	5.98	0.0	0.0	0.0	0.00
148	V59	V60		x	19.70	1.02	4.38	1.22	0.0	0.0	0.0	0.00
149	V60	V61		x	19.70	1.34	4.38	1.61	0.0	0.0	0.0	0.00
150	V61	V62		x	19.70	3.07	4.38	3.68	0.0	0.0	0.0	0.00
151	V59	V63		x	4.79	4.13	1.57	4.96	0.0	0.0	0.0	0.00
152	V60	V63		x	6.95	3.28	2.13	3.94	0.0	0.0	0.0	0.00
153	V61	V63		x	6.95	3.14	2.13	3.77	0.0	0.0	0.0	0.00
154	V62	V63		x	15.06	5	3.72	6	0.0	0.0	0.0	0.00
155	V63	V64		x	21.86	2.52	4.65	3.02	0.0	0.0	0.0	0.00
156	V64	V65		x	17.96	2.08	4.15	2.5	0.0	0.0	0.0	0.00
157	V65	V55		x	16.75	7.1	3.98	8.52	0.0	1.0	0.5	1.50
158	V56	V66		x	7.19	4.5	2.57	5.4	0.0	0.0	0.0	0.00
159	V57	V67		x	8.40	4.5	2.71	5.4	0.0	0.0	0.0	0.00
160	V58	V68		x	7.63	4.5	2.65	5.4	0.0	0.0	0.0	0.00
161	V58	V69		x	6.25	4.5	2.19	5.4	0.0	0.0	0.0	0.00
162	V59	V70		x	2.92	4.5	1.24	5.4	0.0	0.0	0.0	0.00
163	V60	V71		x	5.08	4.5	1.98	5.4	0.0	0.0	0.0	0.00
164	V61	V72		x	5.08	4.5	1.98	5.4	0.0	0.0	0.0	0.00
165	V62	V73		x	5.30	4.5	1.19	5.4	0.0	0.0	0.0	0.00
166	V62	V74		x	6.97	4.5	2.55	5.4	0.0	0.0	0.0	0.00
167	V63	V75		x	7.63	4.5	2.65	5.4	0.0	0.0	0.0	0.00

Table A-5 Steam Generator Compartment Vent Path Description

B. Break Type : RHR pump outlet line(8B) guillotine break
Break Area : 0.506(ft^2)
Break location : Volume number 9

Vent Path No.	Volume No.		Description of Vent Path Flow		Area (ft^2)	Inertia Length (ft)	Hydraulic Diameter (ft)	Friction Length (ft)	Loss Coefficient K			
	From	To	Choked	Unchoked					Turning and Obstruction	Expansion	Contraction	Total
168	V63	V76		x	5.41	4.5	2	5.4	0.0	0.0	0.0	0.00
169	V64	V77		x	7.90	4.5	2.64	5.4	0.0	0.0	0.0	0.00
170	V65	V78		x	6.73	4.5	2.5	5.4	0.0	0.0	0.0	0.00
171	V54	V66		x	12.95	11.1	3.59	13.32	0.0	1.0	0.5	1.50
172	V66	V67		x	13.85	2.1	3.72	2.52	0.0	0.0	0.0	0.00
173	V67	V68		x	13.36	2.16	3.65	2.59	0.0	0.0	0.0	0.00
174	V67	V69		x	3.38	4.08	1.44	4.9	0.0	0.0	0.0	0.00
175	V68	V69		x	10.99	2.73	3.29	3.28	0.0	0.0	0.0	0.00
176	V68	V70		x	3.49	3.39	1.48	4.07	0.0	0.0	0.0	0.00
177	V68	V71		x	5.07	2.97	1.98	3.56	0.0	0.0	0.0	0.00
178	V68	V72		x	5.07	3.67	1.98	4.4	0.0	0.0	0.0	0.00
179	V69	V73		x	8.12	3.45	2.74	4.14	0.0	0.0	0.0	0.00
180	V69	V74		x	3.90	4.6	1.62	5.52	0.0	0.0	0.0	0.00
181	V70	V71		x	8.09	1.02	1.34	1.22	0.0	0.0	0.0	0.00
182	V71	V72		x	11.54	1.34	2.18	1.61	0.0	0.0	0.0	0.00
183	V72	V73		x	11.54	1.74	2.18	2.09	0.0	0.0	0.0	0.00
184	V70	V75		x	3.49	3.39	1.48	4.07	0.0	0.0	0.0	0.00
185	V71	V75		x	5.07	2.97	1.98	3.56	0.0	0.0	0.0	0.00
186	V72	V75		x	5.07	3.67	1.98	4.4	0.0	0.0	0.0	0.00
187	V73	V74		x	9.36	2.4	1.87	2.88	0.0	0.0	0.0	0.00
188	V73	V76		x	8.12	3.47	2.74	4.16	0.0	0.0	0.0	0.00
189	V74	V76		x	2.87	4.62	1.26	5.54	0.0	0.0	0.0	0.00
190	V75	V76		x	10.99	2.62	3.29	3.14	0.0	0.0	0.0	0.00
191	V75	V77		x	13.36	2.14	3.65	2.57	0.0	0.0	0.0	0.00

Table A-5 Steam Generator Compartment Vent Path Description

B. Break Type : RHR pump outlet line(8B) guillotine break
Break Area : 0.506(ft^2)
Break location : Volume number 9

Vent Path No.	Volume No.		Description of Vent Path Flow		Area (ft^2)	Inertia Length (ft)	Hydraulic Diameter (ft)	Friction Length (ft)	Loss Coefficient K			
	From	To	Choked	Unchoked					Turning and Obstruction	Expansion	Contraction	Total
192	V76	V77		x	2.60	4.04	1.16	4.85	0.0	0.0	0.0	0.00
193	V77	V78		x	13.11	2.08	3.62	2.5	0.0	0.0	0.0	0.00
194	V78	V55		x	12.22	7.1	3.48	8.52	0.0	1.0	0.5	1.50
195	V66	V79		x	7.19	3.07	2.57	3.68	0.0	0.0	0.0	0.00
196	V67	V80		x	8.40	3.07	2.71	3.68	0.0	0.0	0.0	0.00
197	V68	V81		x	7.63	3.07	2.65	3.68	0.0	0.0	0.0	0.00
198	V69	V81		x	6.25	3.07	2.19	3.68	0.0	0.0	0.0	0.00
199	V70	V82		x	2.92	3.07	1.24	3.68	0.0	0.0	0.0	0.00
200	V71	V83		x	5.08	3.07	1.98	3.68	0.0	0.0	0.0	0.00
201	V72	V84		x	5.08	3.07	1.98	3.68	0.0	0.0	0.0	0.00
202	V73	V85		x	8.14	3.07	2.74	3.68	0.0	0.0	0.0	0.00
203	V74	V85		x	6.97	3.07	2.55	3.68	0.0	0.0	0.0	0.00
204	V75	V86		x	7.63	3.07	2.65	3.68	0.0	0.0	0.0	0.00
205	V76	V86		x	5.41	3.07	2	3.68	0.0	0.0	0.0	0.00
206	V77	V87		x	7.90	3.07	2.64	3.68	0.0	0.0	0.0	0.00
207	V78	V88		x	6.73	3.07	2.5	3.68	0.0	0.0	0.0	0.00
208	V54	V79		x	8.05	11.1	2.79	13.32	0.0	1.0	0.5	1.50
209	V79	V80		x	8.61	2.1	2.86	2.52	0.0	0.0	0.0	0.00
210	V80	V81		x	10.41	2.56	3.07	3.07	0.0	0.0	0.0	0.00
211	V81	V82		x	2.17	4.24	1.32	5.09	0.0	0.0	0.0	0.00
212	V81	V83		x	3.15	3.39	1.71	4.07	0.0	0.0	0.0	0.00
213	V81	V84		x	3.15	3.12	1.71	3.74	0.0	0.0	0.0	0.00
214	V81	V85		x	7.47	4.98	2.7	5.98	0.0	0.0	0.0	0.00
215	V82	V83		x	8.94	1.02	2.91	1.22	0.0	0.0	0.0	0.00

Table A-5 Steam Generator Compartment Vent Path Description

B. Break Type : RHR pump outlet line(8B) guillotine break
Break Area : 0.506(ft^2)
Break location : Volume number 9

Vent Path No.	Volume No.		Description of Vent Path Flow		Area (ft^2)	Inertia Length (ft)	Hydraulic Diameter (ft)	Friction Length (ft)	Loss Coefficient K			
	From	To	Choked	Unchoked					Turning and Obstruction	Expansion	Contraction	Total
216	V83	V84		x	8.94	1.34	2.91	1.61	0.0	0.0	0.0	0.00
217	V84	V85		x	8.94	3.07	2.91	3.68	0.0	0.0	0.0	0.00
218	V82	V86		x	2.17	4.13	1.32	4.96	0.0	0.0	0.0	0.00
219	V83	V86		x	3.15	3.28	1.71	3.94	0.0	0.0	0.0	0.00
220	V84	V86		x	3.15	3.14	1.71	3.77	0.0	0.0	0.0	0.00
221	V85	V86		x	65.64	5	24.98	6	0.0	0.0	0.0	0.00
222	V86	V87		x	9.92	2.52	3.02	3.02	0.0	0.0	0.0	0.00
223	V87	V88		x	8.15	2.08	2.8	2.5	0.0	0.0	0.0	0.00
224	V88	V55		x	7.60	7.1	2.72	8.52	0.0	1.0	0.5	1.50
225	V79	V91		x	2.16	2.52	1.83	7.41	0.34	0.16	0.2	0.70
226	V80	V91		x	2.55	2.52	1.36	6.75	0.34	0.16	0.2	0.70
227	V81	V91		x	6.35	3.35	1.72	7.26	0.34	0.16	0.2	0.70
228	V82	V91		x	1.75	2.52	1.24	6.58	0.34	0.16	0.2	0.70
229	V83	V91		x	3.05	2.52	1.98	7.62	0.34	0.16	0.2	0.70
230	V84	V91		x	3.22	3.44	1.71	7.24	0.34	0.16	0.2	0.70
231	V85	V91	x		6.77	4.13	1.56	4.96	0.0	0.0	0.0	0.00
232	V86	V91		x	9.29	2.97	3.15	9.27	0.34	0.16	0.2	0.70
233	V87	V91		x	4.74	2.52	2.64	8.55	0.34	0.16	0.2	0.70
234	V88	V91		x	2.77	2.52	1.7	7.23	0.34	0.16	0.2	0.70
235	V89	V90		x	8.02	16.93	2.21	20.32	0.0	1.0	0.5	1.50
236	V89	V92		x	9.74	12.59	2.58	15.11	0.0	1.0	0.5	1.50
237	V89	V99		x	13.23	11.34	3.25	13.61	0.0	1.0	0.5	1.50
238	V89	V99		x	27.82	5.99	4.02	7.19	0.0	1.0	0.5	1.50
239	V89	V99		x	36.11	8.4	5.57	10.08	0.0	1.0	0.5	1.50

Table A-5 Steam Generator Compartment Vent Path Description

B. Break Type : RHR pump outlet line(8B) guillotine break
Break Area : 0.506(ft^2)
Break location : Volume number 9

Vent Path No.	Volume No.		Description of Vent Path Flow		Area (ft^2)	Inertia Length (ft)	Hydraulic Diameter (ft)	Friction Length (ft)	Loss Coefficient K			
	From	To	Choked	Unchoked					Turning and Obstruction	Expansion	Contraction	Total
240	V90	V91		x	16.16	19.24	2.91	23.09	0.0	1.0	0.5	1.50
241	V90	V99		x	46.62	10.29	6.2	12.35	0.0	1.0	0.5	1.50
242	V90	V99		x	26.61	5.87	4.65	7.04	0.0	1.0	0.5	1.50
243	V91	V92		x	14.58	15.23	2.62	18.28	0.0	1.0	0.5	1.50
244	V92	V99		x	45.84	6.21	5.38	7.45	0.0	1.0	0.5	1.50
245	V89	V93		x	17.85	5.12	3.54	15.02	0.34	0.16	0.2	0.70
246	V90	V94		x	43.06	5.12	5.98	18.46	0.34	0.16	0.2	0.70
247	V91	V95		x	62.67	6.24	7.68	20.86	0.34	0.16	0.2	0.70
248	V92	V96		x	22.48	5.12	4.98	17.05	0.34	0.16	0.2	0.70
249	V93	V94		x	14.91	16.93	2.41	20.32	0.0	1.0	0.5	1.50
250	V93	V96		x	18.10	12.59	2.86	15.11	0.0	1.0	0.5	1.50
251	V93	V99		x	24.59	11.34	3.72	13.61	0.0	1.0	0.5	1.50
252	V93	V99		x	87.07	5.99	9.21	7.19	0.0	1.0	0.5	1.50
253	V93	V99		x	77.44	8.4	8.59	10.08	0.0	1.0	0.5	1.50
254	V94	V95		x	37.61	19.24	5.22	23.09	0.0	1.0	0.5	1.50
255	V94	V99		x	100.40	10.29	9.98	12.35	0.0	1.0	0.5	1.50
256	V94	V99		x	90.07	5.87	9.39	7.04	0.0	1.0	0.5	1.50
257	V95	V96		x	35.51	15.23	4.99	18.28	0.0	1.0	0.5	1.50
258	V96	V99		x	95.07	6.21	9.68	7.45	0.0	1.0	0.5	1.50
259	V93	V99		x	29.75	5.5	3.54	6.6	0.0	1.0	0.0	1.00
260	V94	V99		x	71.76	5.5	5.98	6.6	0.0	1.0	0.0	1.00
261	V95	V99		x	74.61	5.5	6.03	6.6	0.0	1.0	0.0	1.00
262	V96	V99		x	37.46	5.5	4.98	6.6	0.0	1.0	0.0	1.00

Table A-6 Mass and Energy Release Rates for Steam Generator Compartment Peak Pressure Analyses

B. Break Type : RHR pump Outlet line(8B) guillotine break
Break Area : 0.506(ft^2)
Break location : Volume number 9

*Mass Release Rate was doubled from the following value for guillotine break

Time (s)	Mass Release Rate* (lbm/s)	Enthalpy (BTU/lbm)
0	0	548.03
0.001	2449.59	548.03
0.002	5051.31	550.212
0.003	5631.08	550.983
0.004	5703.47	551.094
0.005	5813.28	551.255
0.006	6049.07	551.604
0.007	6287.96	551.975
0.008	6424.02	552.199
0.009	6471.97	552.287
0.01	6521.09	552.375
0.011	6630.33	552.562
0.012	6767.91	552.799
0.013	6844.83	552.941
0.014	6807.37	552.892
0.015	6697.91	552.722
0.016	6631.55	552.623
0.017	6709.95	552.76
0.018	6933.26	553.146
0.019	7182.29	553.592
0.02	7300.74	553.819
0.021	7209.34	553.671
0.022	6951.15	553.232
0.023	6648.9	552.733
0.024	6426.05	552.379
0.025	6341.11	552.252
0.026	6368.83	552.304
0.027	6439.71	552.427
0.028	6505.62	552.543
0.029	6572.76	552.663
0.03	6676.84	552.844
0.031	6829.64	553.112
0.032	6988.66	553.397
0.033	7080	553.57
0.034	7055.48	553.539
0.035	6932.28	553.335
0.036	6783.66	553.089
0.037	6691.86	552.942
0.038	6695.84	552.957
0.039	6768.4	553.089

Table A-6 Mass and Energy Release Rates for Steam Generator Compartment Peak Pressure Analyses

B. Break Type : RHR pump Outlet line(8B) guillotine break
Break Area : 0.506(ft^2)
Break location : Volume number 9

*Mass Release Rate was doubled from the following value for guillotine break

Time (s)	Mass Release Rate* (lbm/s)	Enthalpy (BTU/lbm)
0.04	6840.8	553.223
0.041	6856.25	553.261
0.042	6807.34	553.187
0.043	6731.28	553.067
0.044	6674.68	552.979
0.045	6658.99	552.962
0.046	6671.38	552.991
0.047	6684.95	553.023
0.048	6687.93	553.038
0.049	6695.06	553.058
0.05	6731.68	553.129
0.051	6804.73	553.263
0.052	6886.31	553.414
0.053	6926.4	553.494
0.054	6886.44	553.435
0.055	6766.19	553.236
0.056	6604.36	552.968
0.057	6455.34	552.727
0.058	6359.27	552.576
0.059	6323.96	552.526
0.06	6329.19	552.542
0.061	6348.15	552.58
0.062	6367.98	552.62
0.063	6393.19	552.668
0.064	6432.62	552.741
0.065	6484.06	552.833
0.066	6531.5	552.921
0.067	6557.34	552.972
0.068	6558.01	552.981
0.069	6548.76	552.973
0.07	6552.75	552.987
0.071	6582.77	553.044
0.072	6629.48	553.131
0.073	6665.91	553.202
0.074	6665.19	553.209
0.075	6617.93	553.136
0.076	6536.9	553.005
0.077	6447.77	552.862
0.078	6374.07	552.746
0.079	6326.91	552.674
0.08	6304.91	552.644

Table A-6 Mass and Energy Release Rates for Steam Generator Compartment Peak Pressure Analyses

B. Break Type : RHR pump Outlet line(8B) guillotine break
Break Area : 0.506(ft^2)
Break location : Volume number 9

*Mass Release Rate was doubled from the following value for guillotine break

Time (s)	Mass Release Rate* (lbm/s)	Enthalpy (BTU/lbm)
0.081	6302.26	552.646
0.082	6316.52	552.676
0.083	6349.46	552.736
0.084	6400.76	552.828
0.085	6461.52	552.936
0.086	6514.68	553.032
0.087	6543.78	553.089
0.088	6543.35	553.095
0.089	6522.71	553.066
0.09	6499.91	553.034
0.091	6489.85	553.023
0.092	6495.06	553.038
0.093	6505.25	553.061
0.094	6505.63	553.068
0.095	6487.17	553.043
0.096	6451.41	552.989
0.097	6407.35	552.921
0.098	6364.4	552.854
0.099	6327.3	552.798
0.1	6296.27	552.752
0.101	6270.9	552.716
0.102	6253.34	552.692
0.103	6247.48	552.688
0.104	6254.62	552.704
0.105	6269.63	552.734
0.106	6281.53	552.76
0.107	6278.88	552.761
0.108	6256.57	552.729
0.109	6219.03	552.673
0.11	6177.92	552.61
0.111	6145.9	552.563
0.112	6130.58	552.543
0.113	6132.17	552.55
0.114	6145.84	552.577
0.115	6166.07	552.615
0.116	6189.73	552.658
0.117	6215.77	552.706
0.118	6243.03	552.755
0.119	6268.67	552.803
0.12	6289.18	552.842
0.121	6303.06	552.87

Table A-6 Mass and Energy Release Rates for Steam Generator Compartment Peak Pressure Analyses

B. Break Type : RHR pump Outlet line(8B) guillotine break
Break Area : 0.506(ft^2)
Break location : Volume number 9

*Mass Release Rate was doubled from the following value for guillotine break

Time (s)	Mass Release Rate* (lbm/s)	Enthalpy (BTU/lbm)
0.122	6312.45	552.891
0.123	6321.99	552.911
0.124	6335.13	552.938
0.125	6350.87	552.969
0.126	6363.51	552.995
0.127	6365.77	553.004
0.128	6353.3	552.988
0.129	6327.13	552.948
0.13	6292.98	552.895
0.131	6258.05	552.841
0.132	6227.86	552.795
0.133	6205.06	552.762
0.134	6190.32	552.741
0.135	6183.86	552.735
0.136	6186.16	552.742
0.137	6197	552.764
0.138	6214.15	552.797
0.139	6233.09	552.832
0.14	6248.48	552.862
0.141	6256.68	552.88
0.142	6257.4	552.885
0.143	6253.28	552.883
0.144	6247.54	552.877
0.145	6241.36	552.871
0.146	6232.88	552.86
0.147	6218.42	552.84
0.148	6195.02	552.805
0.149	6162.38	552.755
0.15	6123.1	552.694
0.151	6081.12	552.628
0.152	6040.04	552.565
0.153	6002.33	552.507
0.154	5969.86	552.458
0.155	5944.7	552.42
0.156	5929.2	552.399
0.157	5924.87	552.395
0.158	5930.98	552.408
0.159	5944.1	552.432
0.16	5959.18	552.459
0.161	5971.79	552.483
0.162	5979.99	552.499

Table A-6 Mass and Energy Release Rates for Steam Generator Compartment Peak Pressure Analyses

B. Break Type : RHR pump Outlet line(8B) guillotine break
Break Area : 0.506(ft^2)
Break location : Volume number 9

*Mass Release Rate was doubled from the following value for guillotine break

Time (s)	Mass Release Rate* (lbm/s)	Enthalpy (BTU/lbm)
0.163	5984.72	552.51
0.164	5988.66	552.52
0.165	5994.28	552.532
0.166	6002.46	552.548
0.167	6012.34	552.567
0.168	6022.2	552.587
0.169	6030.58	552.603
0.17	6036.73	552.617
0.171	6040.4	552.626
0.172	6041.33	552.63
0.173	6039.17	552.63
0.174	6033.98	552.624
0.175	6026.86	552.615
0.176	6020.12	552.607
0.177	6016.46	552.604
0.178	6017.69	552.609
0.179	6023.67	552.621
0.18	6032.41	552.639
0.181	6041.12	552.656
0.182	6047.66	552.669
0.183	6051.31	552.678
0.184	6052.7	552.683
0.185	6052.92	552.686
0.186	6052.85	552.689
0.187	6052.89	552.692
0.188	6053.21	552.695
0.189	6053.99	552.699
0.19	6055.35	552.704
0.191	6056.95	552.709
0.192	6057.6	552.713
0.193	6055.43	552.712
0.194	6048.55	552.703
0.195	6035.86	552.685
0.196	6017.62	552.657
0.197	5995.21	552.623
0.198	5970.5	552.585
0.199	5945.08	552.546
0.2	5919.9	552.508
0.205	5828.47	552.372
0.21	5865.17	552.438
0.215	5948.11	552.584

Table A-6 Mass and Energy Release Rates for Steam Generator Compartment Peak Pressure Analyses

B. Break Type : RHR pump Outlet line(8B) guillotine break
Break Area : 0.506(ft^2)
Break location : Volume number 9

*Mass Release Rate was doubled from the following value for guillotine break

Time (s)	Mass Release Rate* (lbm/s)	Enthalpy (BTU/lbm)
0.22	5941.11	552.586
0.225	5892.65	552.516
0.23	5893.78	552.525
0.235	5920.05	552.578
0.24	5868.64	552.506
0.245	5805.44	552.411
0.25	5801.69	552.411
0.255	5796.69	552.412
0.26	5762.02	552.363
0.265	5766.54	552.375
0.27	5814.6	552.459
0.275	5817.88	552.473
0.28	5776.33	552.412
0.285	5766.26	552.401
0.29	5773.41	552.419
0.295	5727.6	552.353
0.3	5670.31	552.265
0.305	5678.18	552.281
0.31	5727.04	552.363
0.315	5747.8	552.402
0.32	5739.19	552.393
0.325	5731.84	552.386
0.33	5713	552.361
0.335	5677	552.308
0.34	5653.55	552.274
0.345	5646.43	552.266
0.35	5631.44	552.246
0.355	5622.06	552.234
0.36	5643.29	552.27
0.365	5672.2	552.319
0.37	5672.15	552.323
0.375	5650.78	552.293
0.38	5637.2	552.274
0.385	5624.1	552.256
0.39	5593.49	552.211
0.395	5562.48	552.165
0.4	5557.65	552.159
0.405	5575.43	552.188
0.41	5591.9	552.217
0.415	5596.32	552.226
0.42	5591.72	552.222

Table A-6 Mass and Energy Release Rates for Steam Generator Compartment Peak Pressure Analyses

B. Break Type : RHR pump Outlet line(8B) guillotine break
Break Area : 0.506(ft^2)
Break location : Volume number 9

*Mass Release Rate was doubled from the following value for guillotine break

Time (s)	Mass Release Rate* (lbm/s)	Enthalpy (BTU/lbm)
0.425	5579.31	552.205
0.43	5563.66	552.182
0.435	5554.4	552.169
0.44	5554.12	552.171
0.445	5557.7	552.178
0.45	5562.14	552.187
0.455	5569.61	552.2
0.46	5578.92	552.217
0.465	5580.8	552.222
0.47	5569.13	552.206
0.475	5548.98	552.176
0.48	5529.01	552.147
0.485	5513.36	552.124
0.49	5503.87	552.11
0.495	5504.56	552.112
0.5	5517.35	552.133
0.6	5487.05	552.112
0.7	5461.38	552.092
0.8	5446.69	552.087
0.9	5427.26	552.072
1	5422.8	552.079
1.1	5410.29	552.072
1.2	5407.06	552.079
1.3	5399.57	552.079
1.4	5393.56	552.082
1.5	5385.81	552.084
1.6	5376.05	552.085
1.7	5364.85	552.087
1.8	5353.45	552.092
1.9	5342.62	552.102
2	5332.88	552.117
2.1	5324.27	552.138
2.2	5315.54	552.162
2.3	5306.79	552.19
2.4	5297.66	552.22
2.5	5288.28	552.252
2.6	5278.49	552.286
2.7	5268.52	552.323
2.8	5258.49	552.361
2.9	5248.65	552.401
3	5238.2	552.442

Table A-6 Mass and Energy Release Rates for Steam Generator Compartment Peak Pressure Analyses

B. Break Type : RHR pump Outlet line(8B) guillotine break
Break Area : 0.506(ft^2)
Break location : Volume number 9

*Mass Release Rate was doubled from the following value for guillotine break

Time (s)	Mass Release Rate* (lbm/s)	Enthalpy (BTU/lbm)
3.1	5227.86	552.484
3.2	5217.96	552.529
3.3	5208.18	552.574
3.4	5198.68	552.621
3.5	5189.73	552.67
3.6	5181.38	552.721
3.7	5173.8	552.773
3.8	5166.32	552.827
3.9	5159.12	552.882
4	5152.32	552.938
4.1	5145.68	552.996
4.2	5139	553.055
4.3	5132.17	553.114
4.4	5125.27	553.175
4.5	5118.23	553.237
4.6	5111.35	553.301
4.7	5104.49	553.367
4.8	5097.62	553.435
4.9	5090.63	553.504
5	5083.36	553.576
5.1	5075.88	553.649
5.2	5068.42	553.725
5.3	5060.99	553.804
5.4	5053.58	553.885
5.5	5046.15	553.969
5.6	5038.72	554.056
5.7	5031.23	554.145
5.8	5023.49	554.237
5.9	5015.99	554.331
6	5008.38	554.428
6.1	5000.71	554.526
6.2	4992.98	554.627
6.3	4985.27	554.729
6.4	4977.59	554.833
6.5	4969.88	554.939
6.6	4962.1	555.045
6.7	4954.3	555.152
6.8	4946.47	555.259
6.9	4938.63	555.366
7	4930.79	555.473
7.1	4922.96	555.58

Table A-6 Mass and Energy Release Rates for Steam Generator Compartment Peak Pressure Analyses

B. Break Type : RHR pump Outlet line(8B) guillotine break
Break Area : 0.506(ft^2)
Break location : Volume number 9

*Mass Release Rate was doubled from the following value for guillotine break

Time (s)	Mass Release Rate* (lbm/s)	Enthalpy (BTU/lbm)
7.2	4915.17	555.686
7.3	4907.31	555.791
7.4	4899.68	555.895
7.5	4892.43	555.998
7.6	4885.28	556.1
7.7	4878	556.199
7.8	4870.72	556.296
7.9	4863.45	556.391
8	4856.09	556.483
8.1	4849.06	556.574
8.2	4842.09	556.661
8.3	4835.23	556.746
8.4	4828.49	556.828
8.5	4821.84	556.907
8.6	4815.27	556.984
8.7	4808.78	557.057
8.8	4802.29	557.128
8.9	4795.88	557.195
9	4789.49	557.259
9.1	4783.13	557.321
9.2	4776.82	557.379
9.3	4770.56	557.435
9.4	4764.35	557.487
9.5	4758.19	557.537
9.6	4752.1	557.584
9.7	4746.09	557.628
9.8	4740.17	557.67
9.9	4734.31	557.709
10	4728.51	557.746

Table A-7 Steam Generator Compartment Nodal Description

C. Break Type : Feed Water line(16B) guillotine break **(Full power operating condition)**
Break Area :2.234(ft^2)
Break location : Volume number 71

Volume No.	Description	Height (ft)	Free Volume (ft^3)	Initial Conditions			Calculated Peak Press. Diff. (psid)	Design Peak Press. Diff (psid)	Margin (%)
				Temp. (deg F)	Press. (psia)	Humid. (%)			
1	West quadrant around A-RCP in A-SG compartment:between EL 25'-3" and 36'-5"	11.17	819	120	14.396	0	3.48	18	417.2
2	North quadrant around A-RCP in A-SG compartment:between EL 25'-3" and 36'-5"	11.17	729	120	14.396	0	3.69	18	387.8
3	East quadrant around A-RCP in A-SG compartment:between EL 25'-3" and 36'-5"	11.17	1327	120	14.396	0	2.95	18	510.2
4	South quadrant around A-RCP in A-SG compartment:between EL 25'-3" and 36'-5"	11.17	1133	120	14.396	0	2.93	18	514.3
5	Northwest quadrant around A-SG in A-SG compartment:between EL 25'-3" and 36'-5"	11.17	1503	120	14.396	0	2.79	18	545.2

Table A-7 Steam Generator Compartment Nodal Description

C. Break Type : Feed Water line(16B) guillotine break **(Full power operating condition)**
Break Area :2.234(ft^2)
Break location : Volume number 71

				Initial Conditions					
6	Northeast quadrant around A-SG in A-SG compartment:between EL 25'-3" and 36'-5"	11.17	1835	120	14.396	0	2.85	18	531.6
7	Southeast quadrant around A-SG in A-SG compartment:between EL 25'-3" and 36'-5"	11.17	1518	120	14.396	0	3.04	18	492.1
8	Southwest quadrant around A-SG in A-SG compartment:between EL 25'-3" and 36'-5"	11.17	1239	120	14.396	0	2.84	18	533.8
9	West quadrant around A-RCP in A-SG compartment:between EL 36'-5" and 46'-5.08"	10	591	120	14.396	0	2.74	18	556.9
10	North quadrant around A-RCP in A-SG compartment:between EL 36'-5" and 46'-5.08"	10	539	120	14.396	0	2.75	18	554.5
11	East quadrant around A-RCP in A-SG compartment:between EL 36'-5" and 46'-5.08"	10	1125	120	14.396	0	2.75	18	554.5
12	South quadrant around A-RCP in A-SG compartment:between EL 36'-5" and 46'-5.08"	10	967	120	14.396	0	2.76	18	552.2

Table A-7 Steam Generator Compartment Nodal Description

C. Break Type : Feed Water line(16B) guillotine break **(Full power operating condition)**
Break Area :2.234(ft^2)
Break location : Volume number 71

				Initial Conditions					
13	Northwest quadrant around A-SG in A-SG compartment:between EL 36'-5" and 46'-5.08"	10	1126	120	14.396	0	2.78	18	547.5
14	Northeast quadrant around A-SG in A-SG compartment:between EL 36'-5" and 46'-5.08"	10	1434	120	14.396	0	2.79	18	545.2
15	Southeast quadrant around A-SG in A-SG compartment:between EL 36'-5" and 46'-5.08"	10	1227	120	14.396	0	2.89	18	522.8
16	Southwest quadrant around A-SG in A-SG compartment:between EL 36'-5" and 46'-5.08"	10	1019	120	14.396	0	2.81	18	540.6
17	West quadrant around A-RCP in A-SG compartment:between EL 46'-5.08" and 55'-1"	8.66	552	120	14.396	0	2.69	18	569.1
18	North quadrant around A-RCP in A-SG compartment:between EL 46'-5.08" and 55'-1"	8.66	461	120	14.396	0	2.69	18	569.1
19	East quadrant around A-RCP in A-SG compartment:between EL 46'-5.08" and 55'-1"	8.66	934	120	14.396	0	2.71	18	564.2

Table A-7 Steam Generator Compartment Nodal Description

C. Break Type : Feed Water line(16B) guillotine break **(Full power operating condition)**
Break Area :2.234(ft^2)
Break location : Volume number 71

				Initial Conditions					
20	South quadrant around A-RCP in A-SG compartment:between EL 46'-5.08" and 55'-1"	8.66	857	120	14.396	0	2.73	18	559.3
21	Northwest quadrant around A-SG in A-SG compartment:between EL 46'-5.08" and 55'-1"	8.66	931	120	14.396	0	2.84	18	533.8
22	Northeast quadrant around A-SG in A-SG compartment:between EL 46'-5.08" and 55'-1"	8.66	538	120	14.396	0	2.87	18	527.2
23	Southeast quadrant around A-SG in A-SG compartment:between EL 46'-5.08" and 55'-1"	8.66	918	120	14.396	0	3.03	18	494.1
24	Southwest quadrant around A-SG in A-SG compartment:between EL 46'-5.08" and 55'-1"	8.66	802	120	14.396	0	2.94	18	512.2
25	West quadrant around A-RCP in A-SG compartment:between EL 55'-1" and 62'-4"	7.25	388	120	14.396	0	2.48	10	303.2
26	North quadrant around A-RCP in A-SG compartment:between EL 55'-1" and 62'-4"	7.25	335	120	14.396	0	2.41	10	314.9

Table A-7 Steam Generator Compartment Nodal Description

C. Break Type : Feed Water line(16B) guillotine break **(Full power operating condition)**
Break Area :2.234(ft^2)
Break location : Volume number 71

				Initial Conditions					
27	East quadrant around A-RCP in A-SG compartment:between EL 55'-1" and 62'-4"	7.25	696	120	14.396	0	2.54	10	293.7
28	South quadrant around A-RCP in A-SG compartment:between EL 55'-1" and 62'-4"	7.25	702	120	14.396	0	2.61	10	283.1
29	Northwest quadrant around A-SG in A-SG compartment:between EL 55'-1" and 62'-4"	7.25	832	120	14.396	0	2.89	10	246.0
30	Northeast quadrant around A-SG in A-SG compartment:between EL 55'-1" and 62'-4"	7.25	546	120	14.396	0	2.95	10	239.0
31	Southeast quadrant around A-SG in A-SG compartment:between EL 55'-1" and 62'-4"	7.25	631	120	14.396	0	3.04	10	228.9
32	Southwest quadrant around A-SG in A-SG compartment:between EL 55'-1" and 62'-4"	7.25	701	120	14.396	0	3.07	10	225.7
33	West quadrant around A-RCP in A-SG compartment:between EL 62'-4" and 68'-3"	5.92	460	120	14.396	0	2.47	10	304.9

Table A-7 Steam Generator Compartment Nodal Description

C. Break Type : Feed Water line(16B) guillotine break **(Full power operating condition)**
Break Area :2.234(ft^2)
Break location : Volume number 71

				Initial Conditions					
34	North quadrant around A-RCP in A-SG compartment:betweenEL 62'-4" and 68'-3"	5.92	392	120	14.396	0	2.40	10	316.7
35	East quadrant around A-RCP in A-SG compartment:between EL 62'-4" and 68'-3"	5.92	755	120	14.396	0	2.53	10	295.3
36	South quadrant around A-RCP in A-SG compartment:between EL 62'-4" and 68'-3"	5.92	669	120	14.396	0	2.61	10	283.1
37	Northwest quadrant around A-SG in A-SG compartment:between EL 62'-4" and 68'-3"	5.92	679	120	14.396	0	3.09	10	223.6
38	Northeast quadrant around A-SG in A-SG compartment:between EL 62'-4" and 68'-3"	5.92	809	120	14.396	0	3.91	10	155.8
39	Southeast quadrant around A-SG in A-SG compartment:between EL 62'-4" and 68'-3"	5.92	602	120	14.396	0	4.62	10	116.5
40	Southwest quadrant around A-SG in A-SG compartment:between EL 62'-4" and 68'-3"	5.92	598	120	14.396	0	3.76	10	166.0

Table A-7 Steam Generator Compartment Nodal Description

C. Break Type : Feed Water line(16B) guillotine break **(Full power operating condition)**
Break Area :2.234(ft^2)
Break location : Volume number 71

				Initial Conditions					
41	West quadrant around A-RCP in A-SG compartment:between EL 68'-3" and 73'-1"	4.83	364	120	14.396	0	2.46	10	306.5
42	North quadrant around A-RCP in A-SG compartment:between EL 68'-3" and 73'-1"	4.83	330	120	14.396	0	2.39	10	318.4
43	East quadrant around A-RCP in A-SG compartment:between EL 68'-3" and 73'-1"	4.83	395	120	14.396	0	2.50	10	300.0
44	South quadrant around A-RCP in A-SG compartment:between EL 68'-3" and 73'-1"	4.83	265	120	14.396	0	2.59	10	286.1
45	Northwest quadrant around A-SG in A-SG compartment:between EL 68'-3" and 73'-1"	4.83	261	120	14.396	0	4.70	10	112.8
46	Northeast quadrant around A-SG in A-SG compartment:between EL 68'-3" and 73'-1"	4.83	474	120	14.396	0	4.48	10	123.2
47	Southeast quadrant around A-SG in A-SG compartment:between EL 68'-3" and 73'-1"	4.83	480	120	14.396	0	4.94	10	102.4

Table A-7 Steam Generator Compartment Nodal Description

C. Break Type : Feed Water line(16B) guillotine break **(Full power operating condition)**
Break Area :2.234(ft^2)
Break location : Volume number 71

				Initial Conditions					
48	Southwest quadrant around A-SG in A-SG compartment:between EL 68'-3" and 73'-1"	4.83	269	120	14.396	0	4.85	10	106.2
49	Northwest quadrant around A-SG in A-SG compartment:between EL 73'-1" and 83'-9"	10.67	420	120	14.396	0	6.73	10	48.6
50	Northeast quadrant around A-SG in A-SG compartment:between EL 73'-1" and 83'-9"	10.67	888	120	14.396	0	5.60	10	78.6
51	Southeast quadrant around A-SG in A-SG compartment:between EL 73'-1" and 83'-9"	10.67	965	120	14.396	0	6.54	10	52.9
52	Southwest quadrant around A-SG in A-SG compartment:between EL 73'-1" and 83'-9"	10.67	474	120	14.396	0	6.90	10	44.9
53	Northwest quadrant around A-SG in A-SG compartment:between EL 83'-9" and 95'-1"	11.33	327	120	14.396	0	6.74	35	419.3
54	Northeast quadrant around A-SG in A-SG compartment:between EL 83'-9" and 95'-1"	11.33	789	120	14.396	0	6.39	35	447.7

Table A-7 Steam Generator Compartment Nodal Description

C. Break Type : Feed Water line(16B) guillotine break **(Full power operating condition)**
Break Area :2.234(ft^2)
Break location : Volume number 71

				Initial Conditions					
55	Southwest quadrant around A-SG in A-SG compartment:between EL 83'-9" and 95'-1"	11.33	412	120	14.396	0	13.12	35	166.8
56	Southeast quadrant around A-SG in A-SG compartment:between EL 83'-9" and 88'-11.28"	5.19	36	120	14.396	0	30.40	35	15.1
57		5.19	42	120	14.396	0	30.32	35	15.4
58		5.19	70	120	14.396	0	30.33	35	15.4
59		5.19	15	120	14.396	0	31.39	-	-
60		5.19	26	120	14.396	0	30.62	-	-
61		5.19	26	120	14.396	0	30.73	-	-
62		5.19	47	120	14.396	0	30.52	35	14.7
63		5.19	66	120	14.396	0	30.34	35	15.4
64		5.19	40	120	14.396	0	30.31	35	15.5
65		5.19	34	120	14.396	0	30.38	35	15.2
66	Southeast quadrant around A-SG in A-SG compartment:between EL 88'-11.28" and 92'-8.74"	3.79	27	120	14.396	0	30.45	35	14.9
67		3.79	31	120	14.396	0	30.69	35	14.0
68		3.79	28	120	14.396	0	31.58	-	-
69		3.79	23	120	14.396	0	31.09	35	12.6
70		3.79	6	120	14.396	0	84.73	-	-
71		3.79	14	120	14.396	0	130.69	-	-

Table A-7 Steam Generator Compartment Nodal Description

C. Break Type : Feed Water line(16B) guillotine break **(Full power operating condition)**
Break Area :2.234(ft^2)
Break location : Volume number 71

				Initial Conditions					
72		3.79	15	120	14.396	0	44.04	-	-
73		3.79	21	120	14.396	0	31.58	-	-
74		3.79	26	120	14.396	0	30.98	35	13.0
75		3.79	28	120	14.396	0	31.56	-	-
76		3.79	20	120	14.396	0	31.15	35	12.4
77		3.79	29	120	14.396	0	30.70	35	14.0
78		3.79	25	120	14.396	0	30.45	35	14.9
79	Southeast quadrant around A-SG in A-SG compartment:between EL 92'-8.74" and 95'-1"	2.35	17	120	14.396	0	30.67	35	14.1
80		2.35	19	120	14.396	0	30.64	35	14.2
81		2.35	32	120	14.396	0	30.76	35	13.8
82		2.35	7	120	14.396	0	33.72	-	-
83		2.35	12	120	14.396	0	32.48	-	-
84		2.35	12	120	14.396	0	31.78	-	-
85		2.35	35	120	14.396	0	30.92	35	13.2
86		2.35	30	120	14.396	0	30.67	35	14.1
87		2.35	18	120	14.396	0	30.55	35	14.6
88		2.35	15	120	14.396	0	30.57	35	14.5

Table A-7 Steam Generator Compartment Nodal Description

C. Break Type : Feed Water line(16B) guillotine break **(Full power operating condition)**
Break Area :2.234(ft^2)
Break location : Volume number 71

				Initial Conditions					
89	Northwest quadrant around A-SG in A-SG compartment:between EL 95'-1" and 101'-0"	5.92	143	120	14.396	0	1.32	35	2551.5
90	Northeast quadrant around A-SG in A-SG compartment:between EL 95'-1" and 101'-0"	5.92	388	120	14.396	0	3.28	35	967.1
91	Southeast quadrant around A-SG in A-SG compartment:between EL 95'-1" and 101'-0"	5.92	445	120	14.396	0	9.34	35	274.7
92	Southwest quadrant around A-SG in A-SG compartment:between EL 95'-1" and 101'-0"	5.92	194	120	14.396	0	3.54	35	888.7
93	Northwest quadrant around A-SG in A-SG compartment:between EL 101'-0" and 112'-0"	11.00	318	120	14.396	0	0.22	35	15809.1
94	Northeast quadrant around A-SG in A-SG compartment:between EL 101'-0" and 112'-0"	11.00	741	120	14.396	0	1.43	35	2347.6
95	Southeast quadrant around A-SG in A-SG compartment:between EL 101'-0" and 112'-0"	11.00	911	120	14.396	0	5.55	35	530.6

Table A-7 Steam Generator Compartment Nodal Description

C. Break Type : Feed Water line(16B) guillotine break **(Full power operating condition)**
Break Area :2.234(ft^2)
Break location : Volume number 71

				Initial Conditions					
96	Southwest quadrant around A-SG in A-SG compartment:between EL 101'-0" and 112'-0"	11.00	400	120	14.396	0	1.67	35	1995.8
~~97~~	~~B-SG compartment~~	~~200~~	~~47000~~	~~120~~	~~14.396~~	~~0~~	~~0.00~~	-	-
~~98~~	~~C/V reactor coolant drain tank compartment~~	~~200~~	~~3086~~	~~120~~	~~14.396~~	~~0~~	~~0.00~~	-	-
99	Containment building free volume	200	2790086	120	14.396	0	0.00	-	-

Table A-8 Steam Generator Compartment Vent Path Description

C. Break Type : Feedwater line(16B) guillotine break **(Full power operating condition)**
Break Area : 2.234(ft^2)
Break location : Volume number 71

Vent Path No.	Volume No.		Description of Vent Path Flow		Area (ft^2)	Inertia Length (ft)	Hydraulic Diameter (ft)	Friction Length (ft)	Loss Coefficient K			
	From	To	Choked	Unchoked					Turning and Obstruction	Expansion	Contraction	Total
1	V1	V2		x	96.72	7.47	8.65	8.96	0.0	1.0	0.5	1.50
2	V1	V4		x	129.70	8.68	9.27	10.42	0.0	1.0	0.5	1.50
~~3~~	~~V1~~	~~V98~~		~~x~~	~~61.86~~	~~7.13~~	~~7.86~~	~~8.56~~	~~0.0~~	~~1.0~~	~~0.5~~	~~1.50~~
4	V2	V3		x	62.97	9.87	3.88	11.84	0.0	1.0	0.5	1.50
5	V3	V4		x	66.68	10.36	4.4	12.43	0.0	1.0	0.5	1.50
6	V3	V6		x	142.53	11.93	10.75	14.32	0.0	1.0	0.5	1.50
7	V3	V99		x	30.94	20.56	5.46	24.67	3.5	0.0	0.5	4.00
8	V4	V5		x	163.80	12.5	10.52	15	0.0	1.0	0.5	1.50
~~9~~	~~V4~~	~~V98~~		~~x~~	~~28.22~~	~~9.32~~	~~4.36~~	~~11.18~~	~~0.0~~	~~1.0~~	~~0.5~~	~~1.50~~
10	V5	V6		x	76.50	11.69	5.8	14.03	0.0	1.0	0.5	1.50
11	V5	V8		x	167.99	10.36	8.33	12.43	0.0	1.0	0.5	1.50
12	V6	V7		x	135.63	13.13	11.64	15.76	0.0	1.0	0.5	1.50
13	V7	V8		x	125.67	9.97	8.05	11.96	0.0	1.0	0.5	1.50
~~14~~	~~V7~~	~~V97~~		~~x~~	~~36.65~~	~~11.06~~	~~5.9~~	~~13.27~~	~~0.84~~	~~1.0~~	~~0.5~~	~~2.34~~
~~15~~	~~V8~~	~~V97~~		~~x~~	~~21.94~~	~~10.86~~	~~4.42~~	~~13.03~~	~~0.45~~	~~1.0~~	~~0.5~~	~~1.95~~
16	V1	V9		x	46.77	6.39	6.4	21.6	0.34	0.16	0.2	0.70
17	V2	V10		x	40.68	6.39	7.91	23.73	0.34	0.16	0.2	0.70
18	V3	V11		x	78.56	6.39	10.96	28.03	0.34	0.16	0.2	0.70
19	V4	V12		x	69.44	6.39	9.44	25.88	0.34	0.16	0.2	0.70
20	V5	V13		x	85.84	6.39	9.36	25.77	0.34	0.16	0.2	0.70
21	V6	V14		x	101.84	6.39	9.09	25.39	0.34	0.16	0.2	0.70
22	V7	V15		x	86.47	6.39	11.12	28.25	0.34	0.16	0.2	0.70
23	V8	V16		x	75.48	6.39	8.8	24.98	0.34	0.16	0.2	0.70

Table A-8 Steam Generator Compartment Vent Path Description

C. Break Type : Feedwater line(16B) guillotine break **(Full power operating condition)**
Break Area : 2.234(ft^2)
Break location : Volume number 71

Vent Path No.	Volume No.		Description of Vent Path Flow		Area (ft^2)	Inertia Length (ft)	Hydraulic Diameter (ft)	Friction Length (ft)	Loss Coefficient K			
	From	To	Choked	Unchoked					Turning and Obstruction	Expansion	Contraction	Total
24	V9	V10		x	61.42	10.63	6.55	12.76	0.0	1.0	0.5	1.50
25	V9	V12		x	48.55	11.41	2.96	13.69	0.0	1.0	0.5	1.50
26	V10	V11		x	41.34	13.22	5.22	15.86	0.0	1.0	0.5	1.50
27	V11	V12		x	66.03	13.4	6.15	16.08	0.0	1.0	0.5	1.50
28	V11	V14		x	120.32	10.2	10.31	12.24	0.0	1.0	0.5	1.50
29	V12	V13		x	140.68	7.34	9.95	8.81	0.0	1.0	0.5	1.50
30	V13	V14		x	42.11	16.96	3.42	20.35	0.0	1.0	0.5	1.50
31	V13	V16		x	83.03	14.62	4.15	17.54	0.0	1.0	0.5	1.50
32	V14	V15		x	86.90	18.53	7.85	22.24	0.0	1.0	0.5	1.50
33	V15	V16		x	84.52	14.17	7.7	17	0.0	1.0	0.5	1.50
~~34~~	~~V15~~	~~V97~~		~~x~~	~~13.17~~	~~8.66~~	~~3.07~~	~~10.39~~	~~0.17~~	~~1.0~~	~~0.5~~	~~1.67~~
~~35~~	~~V16~~	~~V97~~		~~x~~	~~16.48~~	~~11.58~~	~~3.62~~	~~13.9~~	~~0.26~~	~~1.0~~	~~0.5~~	~~1.76~~
36	V9	V17		x	43.13	5.64	5.91	19.41	0.34	0.16	0.2	0.70
37	V10	V18		x	37.12	5.64	6.72	20.55	0.34	0.16	0.2	0.70
38	V11	V19		x	72.16	5.64	10.22	25.48	0.34	0.16	0.2	0.70
39	V12	V20		x	67.19	5.64	9.93	25.07	0.34	0.16	0.2	0.70
40	V13	V21		x	48.11	5.64	3.73	16.33	0.34	0.16	0.2	0.70
41	V14	V22		x	21.94	5.64	2.16	14.12	0.34	0.16	0.2	0.70
42	V15	V23		x	49.34	5.64	4.07	16.81	0.34	0.16	0.2	0.70
43	V16	V24		x	48.67	5.64	4.37	17.23	0.34	0.16	0.2	0.70
44	V17	V18		x	57.59	9.96	7.41	11.95	0.0	1.0	0.5	1.50
45	V17	V20		x	69.73	10.82	5.88	12.98	0.0	1.0	0.5	1.50
46	V18	V19		x	38.11	12.4	5.35	14.88	0.0	1.0	0.5	1.50
47	V19	V20		x	61.30	12.67	7.93	15.2	0.0	1.0	0.5	1.50

Table A-8 Steam Generator Compartment Vent Path Description

C. Break Type : Feedwater line(16B) guillotine break **(Full power operating condition)**
Break Area : 2.234(ft^2)
Break location : Volume number 71

Vent Path No.	Volume No.		Description of Vent Path Flow		Area (ft^2)	Inertia Length (ft)	Hydraulic Diameter (ft)	Friction Length (ft)	Loss Coefficient K			
	From	To	Choked	Unchoked					Turning and Obstruction	Expansion	Contraction	Total
48	V19	V22		x	70.67	12.89	8.4	15.47	0.0	1.0	0.5	1.50
49	V19	V99		x	14.75	16.21	3.73	19.45	3.5	0.0	0.5	4.00
50	V20	V21		x	128.07	7.78	8.31	9.34	0.0	1.0	0.5	1.50
51	V21	V22		x	30.56	14.83	4.61	17.8	0.0	1.0	0.5	1.50
52	V21	V24		x	79.37	14.62	6.27	17.54	0.0	1.0	0.5	1.50
53	V22	V23		x	47.78	16.71	5.7	20.05	0.0	1.0	0.5	1.50
54	V23	V24		x	47.11	14.17	6.68	17	0.0	1.0	0.5	1.50
55	V17	V25		x	33.53	4.82	4.96	16.42	0.34	0.16	0.2	0.70
56	V18	V26		x	29.86	4.82	5.77	17.56	0.34	0.16	0.2	0.70
57	V19	V27		x	62.57	4.82	6.8	19.02	0.34	0.16	0.2	0.70
58	V20	V28		x	60.47	4.82	8.53	21.46	0.34	0.16	0.2	0.70
59	V21	V29		x	79.65	5.39	9.88	23.36	0.34	0.16	0.2	0.70
60	V22	V30		x	59.73	7.26	5.44	17.1	0.34	0.16	0.2	0.70
61	V23	V31		x	110.29	7.96	8.54	9.55	0.0	0.0	0.0	0.00
62	V24	V32		x	83.90	6.76	6.79	19	0.34	0.16	0.2	0.70
63	V25	V26		x	35.33	11.65	4.53	13.98	0.0	1.0	0.5	1.50
64	V25	V28		x	55.78	12.5	7.47	15	0.0	1.0	0.5	1.50
65	V26	V27		x	24.22	13.84	4.57	16.61	0.0	1.0	0.5	1.50
66	V27	V28		x	48.82	14.18	6.51	17.02	0.0	1.0	0.5	1.50
67	V27	V30		x	65.64	12.91	6.38	15.49	0.0	1.0	0.5	1.50
68	V27	V99		x	6.00	15.58	2.4	18.7	3.5	0.0	0.5	4.00
69	V28	V29		x	111.76	7.78	9.86	9.34	0.0	1.0	0.5	1.50
70	V29	V30		x	25.86	14.83	4.78	17.8	0.0	1.0	0.5	1.50
71	V29	V32		x	72.03	14.62	8.38	17.54	0.0	1.0	0.5	1.50

Table A-8 Steam Generator Compartment Vent Path Description

C. Break Type : Feedwater line(16B) guillotine break **(Full power operating condition)**
Break Area : 2.234(ft^2)
Break location : Volume number 71

Vent Path No.	Volume No.		Description of Vent Path Flow		Area (ft^2)	Inertia Length (ft)	Hydraulic Diameter (ft)	Friction Length (ft)	Loss Coefficient K			
	From	To	Choked	Unchoked					Turning and Obstruction	Expansion	Contraction	Total
72	V30	V31		x	40.83	16.71	6.34	20.05	0.0	1.0	0.5	1.50
73	V31	V32		x	33.41	14.17	3.2	17	0.0	1.0	0.5	1.50
~~74~~	~~V32~~	~~V97~~		~~x~~	~~13.17~~	~~9.5~~	~~3.07~~	~~11.4~~	~~0.17~~	~~1.0~~	~~0.5~~	~~1.67~~
75	V25	V33		x	62.52	6.59	6.14	7.91	0.0	0.0	0.0	0.00
76	V26	V34		x	50.81	6.59	5.9	7.91	0.0	0.0	0.0	0.00
77	V27	V35		x	111.57	6.59	9.22	7.91	0.0	0.0	0.0	0.00
78	V28	V36		x	101.10	6.59	8.93	7.91	0.0	0.0	0.0	0.00
79	V29	V37		x	100.49	5.61	9.88	21.72	0.34	0.16	0.2	0.70
80	V30	V38		x	84.55	4	10.72	22.9	0.34	0.16	0.2	0.70
81	V31	V39		x	63.33	4	7.77	18.74	0.34	0.16	0.2	0.70
82	V32	V40		x	79.82	5.08	9.73	21.5	0.34	0.16	0.2	0.70
83	V33	V34		x	56.50	10.89	6.56	13.07	0.0	1.0	0.5	1.50
84	V33	V36		x	72.89	12.5	7.06	15	0.0	1.0	0.5	1.50
85	V34	V35		x	47.64	13.84	6.44	16.61	0.0	1.0	0.5	1.50
86	V35	V36		x	60.24	14.18	7.22	17.02	0.0	1.0	0.5	1.50
87	V35	V38		x	78.91	10.14	8.2	12.17	0.0	1.0	0.5	1.50
88	V36	V37		x	91.21	6.16	8.55	7.39	0.0	1.0	0.5	1.50
89	V37	V38		x	21.11	16.96	4.45	20.35	0.0	1.0	0.5	1.50
90	V37	V40		x	58.79	14.62	7.42	17.54	0.0	1.0	0.5	1.50
91	V38	V39		x	33.32	18.53	5.77	22.24	0.0	1.0	0.5	1.50
92	V39	V40		x	32.19	14.17	5.67	17	0.0	1.0	0.5	1.50
~~93~~	~~V39~~	~~V97~~		~~x~~	~~11.81~~	~~8.02~~	~~2.99~~	~~9.62~~	~~0.17~~	~~1.0~~	~~0.5~~	~~1.67~~
94	V33	V41		x	83.14	5.38	8.15	6.46	0.0	0.0	0.0	0.00
95	V34	V42		x	71.41	5.38	8.28	6.46	0.0	0.0	0.0	0.00

Table A-8 Steam Generator Compartment Vent Path Description

C. Break Type : Feedwater line(16B) guillotine break **(Full power operating condition)**
Break Area : 2.234(ft^2)
Break location : Volume number 71

Vent Path No.	Volume No.		Description of Vent Path Flow		Area (ft^2)	Inertia Length (ft)	Hydraulic Diameter (ft)	Friction Length (ft)	Loss Coefficient K			
	From	To	Choked	Unchoked					Turning and Obstruction	Expansion	Contraction	Total
96	V35	V43		x	84.57	5.38	9.02	6.46	0.0	0.0	0.0	0.00
97	V36	V44		x	60.77	5.38	6.61	6.46	0.0	0.0	0.0	0.00
98	V37	V45		x	55.70	5.38	6.43	6.46	0.0	0.0	0.0	0.00
99	V38	V46		x	105.41	5.38	8.78	6.46	0.0	0.0	0.0	0.00
100	V39	V47		x	99.31	5.38	6.57	6.46	0.0	0.0	0.0	0.00
101	V40	V48		x	57.32	5.38	7.19	6.46	0.0	0.0	0.0	0.00
102	V41	V42		x	47.93	7.47	6.39	8.96	0.0	1.0	0.5	1.50
103	V41	V44		x	59.38	8.62	6.58	10.34	0.0	1.0	0.5	1.50
104	V42	V43		x	42.87	8.22	6.26	9.86	0.0	1.0	0.5	1.50
105	V43	V44		x	32.72	7.05	5.64	8.46	0.0	1.0	0.5	1.50
106	V45	V46		x	17.24	15.05	4.1	18.06	0.0	1.0	0.5	1.50
107	V45	V48		x	18.64	11.81	4.29	14.17	0.0	1.0	0.5	1.50
108	V46	V47		x	20.90	17.36	2.8	20.83	0.0	1.0	0.5	1.50
109	V47	V48		x	26.29	13.78	5.12	16.54	0.0	1.0	0.5	1.50
~~110~~	~~V47~~	~~V97~~		~~x~~	~~1.33~~	~~8.02~~	~~1~~	~~9.62~~	~~0.17~~	~~1.0~~	~~0.5~~	~~1.67~~
111	V41	V99		x	42.73	2.42	6.39	2.9	0.94	1.0	0.25	2.19
112	V42	V99		x	64.61	2.42	8.11	2.9	0.43	1.0	0.05	1.48
113	V43	V99		x	82.76	2.42	9.21	2.9	0.23	1.0	0.02	1.25
114	V44	V99		x	30.65	2.42	5.45	2.9	0.95	1.0	0.25	2.2
115	V45	V49		x	33.42	4.69	6.43	18.24	0.34	0.16	0.2	0.70
116	V46	V50		x	63.25	4.69	8.78	21.56	0.34	0.16	0.2	0.70
117	V47	V51	x		65.41	4.69	8.49	21.15	0.34	0.16	0.2	0.70
118	V48	V52	x		34.39	4.69	7.19	19.31	0.34	0.16	0.2	0.70
119	V49	V50		x	26.26	16.93	3.69	20.32	0.0	1.0	0.5	1.50

Table A-8 Steam Generator Compartment Vent Path Description

C. Break Type : Feedwater line(16B) guillotine break **(Full power operating condition)**
Break Area : 2.234(ft^2)
Break location : Volume number 71

Vent Path No.	Volume No.		Description of Vent Path Flow		Area (ft^2)	Inertia Length (ft)	Hydraulic Diameter (ft)	Friction Length (ft)	Loss Coefficient K			
	From	To	Choked	Unchoked					Turning and Obstruction	Expansion	Contraction	Total
120	V49	V52		x	25.92	13.28	3.24	15.94	0.0	1.0	0.5	1.50
121	V50	V51		x	44.11	19.24	4.87	23.09	0.0	1.0	0.5	1.50
122	V51	V52		x	46.23	15.23	5.74	18.28	0.0	1.0	0.5	1.50
123	V49	V53		x	17.85	6.64	3.54	18.07	0.34	0.16	0.2	0.70
124	V50	V54		x	43.06	6.64	5.98	21.51	0.34	0.16	0.2	0.70
125	V52	V55	x		22.48	6.64	4.98	20.1	0.34	0.16	0.2	0.70
126	V53	V54		x	15.36	16.93	2.42	20.32	0.0	1.0	0.5	1.50
127	V53	V55	x		18.65	13.28	2.87	15.94	0.0	1.0	0.5	1.50
128	V53	V89	x		8.57	5.22	2.15	13.26	0.34	0.16	0.2	0.70
129	V54	V90	x		36.76	5.22	4.92	17.17	0.34	0.16	0.2	0.70
130	V55	V92	x		13.99	5.22	2.43	13.66	0.34	0.16	0.2	0.70
131	V51	V56	x		4.31	4.8	2.57	13.02	0.34	0.16	0.2	0.70
132	V51	V57	x		5.04	4.8	2.71	13.21	0.34	0.16	0.2	0.70
133	V51	V58	x		8.33	4.8	3.24	13.96	0.34	0.16	0.2	0.70
134	V51	V59	x		1.75	4.79	1.24	11.14	0.34	0.16	0.2	0.70
135	V51	V60	x		3.05	4.8	1.98	12.18	0.34	0.16	0.2	0.70
136	V51	V61	x		3.05	4.8	1.98	12.18	0.34	0.16	0.2	0.70
137	V51	V62	x		7.36	4.8	2.31	12.65	0.34	0.16	0.2	0.70
138	V51	V63	x		7.82	4.8	3.15	13.83	0.34	0.16	0.2	0.70
139	V51	V64	x		4.74	4.8	2.64	13.11	0.34	0.16	0.2	0.70
140	V51	V65	x		4.04	4.8	2.5	12.92	0.34	0.16	0.2	0.70
141	V54	V56	x		17.74	11.1	4.12	13.32	0.0	1.0	0.5	1.50
142	V56	V57		x	18.98	2.1	4.29	2.52	0.0	0.0	0.0	0.00
143	V57	V58		x	22.94	2.56	4.77	3.07	0.0	0.0	0.0	0.00

Table A-8 Steam Generator Compartment Vent Path Description

C. Break Type : Feedwater line(16B) guillotine break **(Full power operating condition)**
Break Area : 2.234(ft^2)
Break location : Volume number 71

Vent Path No.	Volume No.		Description of Vent Path Flow		Area (ft^2)	Inertia Length (ft)	Hydraulic Diameter (ft)	Friction Length (ft)	Loss Coefficient K			
	From	To	Choked	Unchoked					Turning and Obstruction	Expansion	Contraction	Total
144	V58	V59		x	4.79	4.24	1.57	5.09	0.0	0.0	0.0	0.00
145	V58	V60		x	6.95	3.39	2.13	4.07	0.0	0.0	0.0	0.00
146	V58	V61		x	6.95	3.12	2.13	3.74	0.0	0.0	0.0	0.00
147	V58	V62		x	16.47	4.98	3.94	5.98	0.0	0.0	0.0	0.00
148	V59	V60		x	19.70	1.02	4.38	1.22	0.0	0.0	0.0	0.00
149	V60	V61		x	19.70	1.34	4.38	1.61	0.0	0.0	0.0	0.00
150	V61	V62		x	19.70	3.07	4.38	3.68	0.0	0.0	0.0	0.00
151	V59	V63		x	4.79	4.13	1.57	4.96	0.0	0.0	0.0	0.00
152	V60	V63		x	6.95	3.28	2.13	3.94	0.0	0.0	0.0	0.00
153	V61	V63		x	6.95	3.14	2.13	3.77	0.0	0.0	0.0	0.00
154	V62	V63		x	15.06	5	3.72	6	0.0	0.0	0.0	0.00
155	V63	V64		x	21.86	2.52	4.65	3.02	0.0	0.0	0.0	0.00
156	V64	V65		x	17.96	2.08	4.15	2.5	0.0	0.0	0.0	0.00
157	V65	V55	x		16.75	7.1	3.98	8.52	0.0	1.0	0.5	1.50
158	V56	V66		x	7.19	4.5	2.57	5.4	0.0	0.0	0.0	0.00
159	V57	V67		x	8.40	4.5	2.71	5.4	0.0	0.0	0.0	0.00
160	V58	V68		x	7.63	4.5	2.65	5.4	0.0	0.0	0.0	0.00
161	V58	V69		x	6.25	4.5	2.19	5.4	0.0	0.0	0.0	0.00
162	V59	V70	x		2.92	4.5	1.24	5.4	0.0	0.0	0.0	0.00
163	V60	V71	x		5.08	4.5	1.98	5.4	0.0	0.0	0.0	0.00
164	V61	V72	x		5.08	4.5	1.98	5.4	0.0	0.0	0.0	0.00
165	V62	V73		x	5.30	4.5	1.19	5.4	0.0	0.0	0.0	0.00
166	V62	V74		x	6.97	4.5	2.55	5.4	0.0	0.0	0.0	0.00
167	V63	V75		x	7.63	4.5	2.65	5.4	0.0	0.0	0.0	0.00

Table A-8 Steam Generator Compartment Vent Path Description

C. Break Type : Feedwater line(16B) guillotine break **(Full power operating condition)**
Break Area : 2.234(ft^2)
Break location : Volume number 71

Vent Path No.	Volume No.		Description of Vent Path Flow		Area (ft^2)	Inertia Length (ft)	Hydraulic Diameter (ft)	Friction Length (ft)	Loss Coefficient K			
	From	To	Choked	Unchoked					Turning and Obstruction	Expansion	Contraction	Total
168	V63	V76		x	5.41	4.5	2	5.4	0.0	0.0	0.0	0.00
169	V64	V77		x	7.90	4.5	2.64	5.4	0.0	0.0	0.0	0.00
170	V65	V78		x	6.73	4.5	2.5	5.4	0.0	0.0	0.0	0.00
171	V54	V66	x		12.95	11.1	3.59	13.32	0.0	1.0	0.5	1.50
172	V66	V67		x	13.85	2.1	3.72	2.52	0.0	0.0	0.0	0.00
173	V67	V68	x		13.36	2.16	3.65	2.59	0.0	0.0	0.0	0.00
174	V67	V69		x	3.38	4.08	1.44	4.9	0.0	0.0	0.0	0.00
175	V68	V69		x	10.99	2.73	3.29	3.28	0.0	0.0	0.0	0.00
176	V68	V70	x		3.49	3.39	1.48	4.07	0.0	0.0	0.0	0.00
177	V68	V71	x		5.07	2.97	1.98	3.56	0.0	0.0	0.0	0.00
178	V68	V72	x		5.07	3.67	1.98	4.4	0.0	0.0	0.0	0.00
179	V69	V73		x	8.12	3.45	2.74	4.14	0.0	0.0	0.0	0.00
180	V69	V74		x	3.90	4.6	1.62	5.52	0.0	0.0	0.0	0.00
181	V70	V71	x		8.09	1.02	1.34	1.22	0.0	0.0	0.0	0.00
182	V71	V72	x		11.54	1.34	2.18	1.61	0.0	0.0	0.0	0.00
183	V72	V73	x		11.54	1.74	2.18	2.09	0.0	0.0	0.0	0.00
184	V70	V75	x		3.49	3.39	1.48	4.07	0.0	0.0	0.0	0.00
185	V71	V75	x		5.07	2.97	1.98	3.56	0.0	0.0	0.0	0.00
186	V72	V75	x		5.07	3.67	1.98	4.4	0.0	0.0	0.0	0.00
187	V73	V74		x	9.36	2.4	1.87	2.88	0.0	0.0	0.0	0.00
188	V73	V76		x	8.12	3.47	2.74	4.16	0.0	0.0	0.0	0.00
189	V74	V76		x	2.87	4.62	1.26	5.54	0.0	0.0	0.0	0.00
190	V75	V76		x	10.99	2.62	3.29	3.14	0.0	0.0	0.0	0.00
191	V75	V77	x		13.36	2.14	3.65	2.57	0.0	0.0	0.0	0.00

Table A-8 Steam Generator Compartment Vent Path Description

C. Break Type : Feedwater line(16B) guillotine break **(Full power operating condition)**
Break Area : 2.234(ft^2)
Break location : Volume number 71

Vent Path No.	Volume No.		Description of Vent Path Flow		Area (ft^2)	Inertia Length (ft)	Hydraulic Diameter (ft)	Friction Length (ft)	Loss Coefficient K			
	From	To	Choked	Unchoked					Turning and Obstruction	Expansion	Contraction	Total
192	V76	V77		x	2.60	4.04	1.16	4.85	0.0	0.0	0.0	0.00
193	V77	V78		x	13.11	2.08	3.62	2.5	0.0	0.0	0.0	0.00
194	V78	V55	x		12.22	7.1	3.48	8.52	0.0	1.0	0.5	1.50
195	V66	V79		x	7.19	3.07	2.57	3.68	0.0	0.0	0.0	0.00
196	V67	V80		x	8.40	3.07	2.71	3.68	0.0	0.0	0.0	0.00
197	V68	V81		x	7.63	3.07	2.65	3.68	0.0	0.0	0.0	0.00
198	V69	V81		x	6.25	3.07	2.19	3.68	0.0	0.0	0.0	0.00
199	V70	V82	x		2.92	3.07	1.24	3.68	0.0	0.0	0.0	0.00
200	V71	V83	x		5.08	3.07	1.98	3.68	0.0	0.0	0.0	0.00
201	V72	V84	x		5.08	3.07	1.98	3.68	0.0	0.0	0.0	0.00
202	V73	V85		x	8.14	3.07	2.74	3.68	0.0	0.0	0.0	0.00
203	V74	V85		x	6.97	3.07	2.55	3.68	0.0	0.0	0.0	0.00
204	V75	V86		x	7.63	3.07	2.65	3.68	0.0	0.0	0.0	0.00
205	V76	V86		x	5.41	3.07	2	3.68	0.0	0.0	0.0	0.00
206	V77	V87		x	7.90	3.07	2.64	3.68	0.0	0.0	0.0	0.00
207	V78	V88		x	6.73	3.07	2.5	3.68	0.0	0.0	0.0	0.00
208	V54	V79	x		8.05	11.1	2.79	13.32	0.0	1.0	0.5	1.50
209	V79	V80		x	8.61	2.1	2.86	2.52	0.0	0.0	0.0	0.00
210	V80	V81	x		10.41	2.56	3.07	3.07	0.0	0.0	0.0	0.00
211	V81	V82	x		2.17	4.24	1.32	5.09	0.0	0.0	0.0	0.00
212	V81	V83	x		3.15	3.39	1.71	4.07	0.0	0.0	0.0	0.00
213	V81	V84		x	3.15	3.12	1.71	3.74	0.0	0.0	0.0	0.00
214	V81	V85		x	7.47	4.98	2.7	5.98	0.0	0.0	0.0	0.00
215	V82	V83		x	8.94	1.02	2.91	1.22	0.0	0.0	0.0	0.00

Table A-8 Steam Generator Compartment Vent Path Description

C. Break Type : Feedwater line(16B) guillotine break **(Full power operating condition)**
Break Area : 2.234(ft^2)
Break location : Volume number 71

Vent Path No.	Volume No.		Description of Vent Path Flow		Area (ft^2)	Inertia Length (ft)	Hydraulic Diameter (ft)	Friction Length (ft)	Loss Coefficient K			
	From	To	Choked	Unchoked					Turning and Obstruction	Expansion	Contraction	Total
216	V83	V84	x		8.94	1.34	2.91	1.61	0.0	0.0	0.0	0.00
217	V84	V85		x	8.94	3.07	2.91	3.68	0.0	0.0	0.0	0.00
218	V82	V86	x		2.17	4.13	1.32	4.96	0.0	0.0	0.0	0.00
219	V83	V86	x		3.15	3.28	1.71	3.94	0.0	0.0	0.0	0.00
220	V84	V86		x	3.15	3.14	1.71	3.77	0.0	0.0	0.0	0.00
221	V85	V86		x	65.64	5	24.98	6	0.0	0.0	0.0	0.00
222	V86	V87	x		9.92	2.52	3.02	3.02	0.0	0.0	0.0	0.00
223	V87	V88		x	8.15	2.08	2.8	2.5	0.0	0.0	0.0	0.00
224	V88	V55	x		7.60	7.1	2.72	8.52	0.0	1.0	0.5	1.50
225	V79	V91	x		2.16	2.52	1.83	7.41	0.34	0.16	0.2	0.70
226	V80	V91	x		2.55	2.52	1.36	6.75	0.34	0.16	0.2	0.70
227	V81	V91	x		6.35	3.35	1.72	7.26	0.34	0.16	0.2	0.70
228	V82	V91	x		1.75	2.52	1.24	6.58	0.34	0.16	0.2	0.70
229	V83	V91	x		3.05	2.52	1.98	7.62	0.34	0.16	0.2	0.70
230	V84	V91	x		3.22	3.44	1.71	7.24	0.34	0.16	0.2	0.70
231	V85	V91	x		6.77	4.13	1.56	4.96	0.0	0.0	0.0	0.00
232	V86	V91	x		9.29	2.97	3.15	9.27	0.34	0.16	0.2	0.70
233	V87	V91	x		4.74	2.52	2.64	8.55	0.34	0.16	0.2	0.70
234	V88	V91	x		2.77	2.52	1.7	7.23	0.34	0.16	0.2	0.70
235	V89	V90		x	8.02	16.93	2.21	20.32	0.0	1.0	0.5	1.50
236	V89	V92		x	9.74	12.59	2.58	15.11	0.0	1.0	0.5	1.50
237	V89	V99		x	13.23	11.34	3.25	13.61	0.0	1.0	0.5	1.50
238	V89	V99		x	27.82	5.99	4.02	7.19	0.0	1.0	0.5	1.50
239	V89	V99		x	36.11	8.4	5.57	10.08	0.0	1.0	0.5	1.50

Table A-8 Steam Generator Compartment Vent Path Description

C. Break Type : Feedwater line(16B) guillotine break **(Full power operating condition)**
Break Area : 2.234(ft^2)
Break location : Volume number 71

Vent Path No.	Volume No.		Description of Vent Path Flow		Area (ft^2)	Inertia Length (ft)	Hydraulic Diameter (ft)	Friction Length (ft)	Loss Coefficient K			
	From	To	Choked	Unchoked					Turning and Obstruction	Expansion	Contraction	Total
240	V90	V91	x		16.16	19.24	2.91	23.09	0.0	1.0	0.5	1.50
241	V90	V99		x	46.62	10.29	6.2	12.35	0.0	1.0	0.5	1.50
242	V90	V99		x	26.61	5.87	4.65	7.04	0.0	1.0	0.5	1.50
243	V91	V92	x		14.58	15.23	2.62	18.28	0.0	1.0	0.5	1.50
244	V92	V99		x	45.84	6.21	5.38	7.45	0.0	1.0	0.5	1.50
245	V89	V93		x	17.85	5.12	3.54	15.02	0.34	0.16	0.2	0.70
246	V90	V94		x	43.06	5.12	5.98	18.46	0.34	0.16	0.2	0.70
247	V91	V95	x		62.67	6.24	7.68	20.86	0.34	0.16	0.2	0.70
248	V92	V96		x	22.48	5.12	4.98	17.05	0.34	0.16	0.2	0.70
249	V93	V94		x	14.91	16.93	2.41	20.32	0.0	1.0	0.5	1.50
250	V93	V96		x	18.10	12.59	2.86	15.11	0.0	1.0	0.5	1.50
251	V93	V99		x	24.59	11.34	3.72	13.61	0.0	1.0	0.5	1.50
252	V93	V99		x	87.07	5.99	9.21	7.19	0.0	1.0	0.5	1.50
253	V93	V99		x	77.44	8.4	8.59	10.08	0.0	1.0	0.5	1.50
254	V94	V95		x	37.61	19.24	5.22	23.09	0.0	1.0	0.5	1.50
255	V94	V99		x	100.40	10.29	9.98	12.35	0.0	1.0	0.5	1.50
256	V94	V99		x	90.07	5.87	9.39	7.04	0.0	1.0	0.5	1.50
257	V95	V96		x	35.51	15.23	4.99	18.28	0.0	1.0	0.5	1.50
258	V96	V99		x	95.07	6.21	9.68	7.45	0.0	1.0	0.5	1.50
259	V93	V99		x	29.75	5.5	3.54	6.6	0.0	1.0	0.0	1.00
260	V94	V99		x	71.76	5.5	5.98	6.6	0.0	1.0	0.0	1.00
261	V95	V99		x	74.61	5.5	6.03	6.6	0.0	1.0	0.0	1.00
262	V96	V99		x	37.46	5.5	4.98	6.6	0.0	1.0	0.0	1.00

Table A-9 Mass and Energy Release Rates for Steam Generator Compartment Peak Pressure Analyses

C. Break Type : Feedwater line(16B) guillotine break
(Full power operating condition)
Break Area : 2.234(ft^2)
Break location : Volume number 71

Time (s)	SG side		Feedwater Pumps side	
	Mass Release Rate (lbm/s)	Enthalpy (BTU/lbm)	Mass Release Rate (lbm/s)	Enthalpy (BTU/lbm)
0.0	0.0	438.17	2588.78	437.91
0.001	18728.2	438.17	7424.14	437.91
0.12	18728.2	438.17	7424.14	437.91
0.120001	13724.3	506.36	7424.14	437.91
10	13724.3	506.36	7424.14	437.91

Table A-10 Steam Generator Compartment Nodal Description

D. Break Type : Feedwater line(16B) guillotine break **(just after hot shutdown condition)**
Break Area :2.234(ft^2)
Break location : Volume number 71

Volume No.	Description	Height (ft)	Free Volume (ft^3)	Initial Conditions			Calculated Peak Press. Diff. (psid)	Design Peak Press. Diff (psid)	Margin (%)
				Temp. (deg F)	Press. (psia)	Humid. (%)			
1	West quadrant around A-RCP in A-SG compartment:between EL 25'-3" and 36'-5"	11.17	819	120	14.396	0	3.60	18	400.0
2	North quadrant around A-RCP in A-SG compartment:between EL 25'-3" and 36'-5"	11.17	729	120	14.396	0	3.81	18	372.4
3	East quadrant around A-RCP in A-SG compartment:between EL 25'-3" and 36'-5"	11.17	1327	120	14.396	0	3.07	18	486.3
4	South quadrant around A-RCP in A-SG compartment:between EL 25'-3" and 36'-5"	11.17	1133	120	14.396	0	3.04	18	492.1
5	Northwest quadrant around A-SG in A-SG compartment:between EL 25'-3" and 36'-5"	11.17	1503	120	14.396	0	2.86	18	529.4
6	Northeast quadrant around A-SG in A-SG compartment:between EL 25'-3" and 36'-5"	11.17	1835	120	14.396	0	3.02	18	496.0

Table A-10 Steam Generator Compartment Nodal Description

D. Break Type : Feedwater line(16B) guillotine break **(just after hot shutdown condition)**
Break Area :2.234(ft^2)
Break location : Volume number 71

				Initial Conditions					
7	Southeast quadrant around A-SG in A-SG compartment:between EL 25'-3" and 36'-5"	11.17	1518	120	14.396	0	3.19	18	464.3
8	Southwest quadrant around A-SG in A-SG compartment:between EL 25'-3" and 36'-5"	11.17	1239	120	14.396	0	2.99	18	502.0
9	West quadrant around A-RCP in A-SG compartment:between EL 36'-5" and 46'-5.08"	10	591	120	14.396	0	2.69	18	569.1
10	North quadrant around A-RCP in A-SG compartment:between EL 36'-5" and 46'-5.08"	10	539	120	14.396	0	2.85	18	531.6
11	East quadrant around A-RCP in A-SG compartment:between EL 36'-5" and 46'-5.08"	10	1125	120	14.396	0	2.81	18	540.6
12	South quadrant around A-RCP in A-SG compartment:between EL 36'-5" and 46'-5.08"	10	967	120	14.396	0	2.53	18	611.5
13	Northwest quadrant around A-SG in A-SG compartment:between EL 36'-5" and 46'-5.08"	10	1126	120	14.396	0	2.74	18	556.9

Table A-10 Steam Generator Compartment Nodal Description

D. Break Type : Feedwater line(16B) guillotine break **(just after hot shutdown condition)**
Break Area :2.234(ft^2)
Break location : Volume number 71

				Initial Conditions					
14	Northeast quadrant around A-SG in A-SG compartment:between EL 36'-5" and 46'-5.08"	10	1434	120	14.396	0	2.92	18	516.4
15	Southeast quadrant around A-SG in A-SG compartment:between EL 36'-5" and 46'-5.08"	10	1227	120	14.396	0	2.96	18	508.1
16	Southwest quadrant around A-SG in A-SG compartment:between EL 36'-5" and 46'-5.08"	10	1019	120	14.396	0	2.93	18	514.3
17	West quadrant around A-RCP in A-SG compartment:between EL 46'-5.08" and 55'-1"	8.66	552	120	14.396	0	2.59	18	595.0
18	North quadrant around A-RCP in A-SG compartment:between EL 46'-5.08" and 55'-1"	8.66	461	120	14.396	0	2.55	18	605.9
19	East quadrant around A-RCP in A-SG compartment:between EL 46'-5.08" and 55'-1"	8.66	934	120	14.396	0	2.45	18	634.7
20	South quadrant around A-RCP in A-SG compartment:between EL 46'-5.08" and 55'-1"	8.66	857	120	14.396	0	2.51	18	617.1

Table A-10 Steam Generator Compartment Nodal Description

D. Break Type : Feedwater line(16B) guillotine break **(just after hot shutdown condition)**
Break Area :2.234(ft^2)
Break location : Volume number 71

				Initial Conditions					
21	Northwest quadrant around A-SG in A-SG compartment:between EL 46'-5.08" and 55'-1"	8.66	931	120	14.396	0	2.56	18	603.1
22	Northeast quadrant around A-SG in A-SG compartment:between EL 46'-5.08" and 55'-1"	8.66	538	120	14.396	0	2.61	18	589.7
23	Southeast quadrant around A-SG in A-SG compartment:between EL 46'-5.08" and 55'-1"	8.66	918	120	14.396	0	2.87	18	527.2
24	Southwest quadrant around A-SG in A-SG compartment:between EL 46'-5.08" and 55'-1"	8.66	802	120	14.396	0	3.01	18	498.0
25	West quadrant around A-RCP in A-SG compartment:between EL 55'-1" and 62'-4"	7.25	388	120	14.396	0	2.50	10	300.0
26	North quadrant around A-RCP in A-SG compartment:between EL 55'-1" and 62'-4"	7.25	335	120	14.396	0	2.48	10	303.2
27	East quadrant around A-RCP in A-SG compartment:between EL 55'-1" and 62'-4"	7.25	696	120	14.396	0	2.34	10	327.4

Table A-10 Steam Generator Compartment Nodal Description

D. Break Type : Feedwater line(16B) guillotine break **(just after hot shutdown condition)**
Break Area :2.234(ft^2)
Break location : Volume number 71

				Initial Conditions					
28	South quadrant around A-RCP in A-SG compartment:between EL 55'-1" and 62'-4"	7.25	702	120	14.396	0	2.41	10	314.9
29	Northwest quadrant around A-SG in A-SG compartment:between EL 55'-1" and 62'-4"	7.25	832	120	14.396	0	2.70	10	270.4
30	Northeast quadrant around A-SG in A-SG compartment:between EL 55'-1" and 62'-4"	7.25	546	120	14.396	0	3.02	10	231.1
31	Southeast quadrant around A-SG in A-SG compartment:between EL 55'-1" and 62'-4"	7.25	631	120	14.396	0	3.26	10	206.7
32	Southwest quadrant around A-SG in A-SG compartment:between EL 55'-1" and 62'-4"	7.25	701	120	14.396	0	3.26	10	206.7
33	West quadrant around A-RCP in A-SG compartment:between EL 62'-4" and 68'-3"	5.92	460	120	14.396	0	2.36	10	323.7
34	North quadrant around A-RCP in A-SG compartment:betweenEL 62'-4" and 68'-3"	5.92	392	120	14.396	0	2.28	10	338.6

Table A-10 Steam Generator Compartment Nodal Description

D. Break Type : Feedwater line(16B) guillotine break **(just after hot shutdown condition)**
Break Area :2.234(ft^2)
Break location : Volume number 71

				Initial Conditions					
35	East quadrant around A-RCP in A-SG compartment:between EL 62'-4" and 68'-3"	5.92	755	120	14.396	0	2.32	10	331.0
36	South quadrant around A-RCP in A-SG compartment:between EL 62'-4" and 68'-3"	5.92	669	120	14.396	0	2.37	10	321.9
37	Northwest quadrant around A-SG in A-SG compartment:between EL 62'-4" and 68'-3"	5.92	679	120	14.396	0	3.26	10	206.7
38	Northeast quadrant around A-SG in A-SG compartment:between EL 62'-4" and 68'-3"	5.92	809	120	14.396	0	4.08	10	145.1
39	Southeast quadrant around A-SG in A-SG compartment:between EL 62'-4" and 68'-3"	5.92	602	120	14.396	0	4.76	10	110.1
40	Southwest quadrant around A-SG in A-SG compartment:between EL 62'-4" and 68'-3"	5.92	598	120	14.396	0	3.92	10	155.1
41	West quadrant around A-RCP in A-SG compartment:between EL 68'-3" and 73'-1"	4.83	364	120	14.396	0	2.30	10	334.8

Table A-10 Steam Generator Compartment Nodal Description

D. Break Type : Feedwater line(16B) guillotine break **(just after hot shutdown condition)**
Break Area :2.234(ft^2)
Break location : Volume number 71

				Initial Conditions					
42	North quadrant around A-RCP in A-SG compartment:between EL 68'-3" and 73'-1"	4.83	330	120	14.396	0	2.15	10	365.1
43	East quadrant around A-RCP in A-SG compartment:between EL 68'-3" and 73'-1"	4.83	395	120	14.396	0	2.18	10	358.7
44	South quadrant around A-RCP in A-SG compartment:between EL 68'-3" and 73'-1"	4.83	265	120	14.396	0	2.33	10	329.2
45	Northwest quadrant around A-SG in A-SG compartment:between EL 68'-3" and 73'-1"	4.83	261	120	14.396	0	4.88	10	104.9
46	Northeast quadrant around A-SG in A-SG compartment:between EL 68'-3" and 73'-1"	4.83	474	120	14.396	0	4.60	10	117.4
47	Southeast quadrant around A-SG in A-SG compartment:between EL 68'-3" and 73'-1"	4.83	480	120	14.396	0	5.06	10	97.6
48	Southwest quadrant around A-SG in A-SG compartment:between EL 68'-3" and 73'-1"	4.83	269	120	14.396	0	4.98	10	100.8

Table A-10 Steam Generator Compartment Nodal Description

D. Break Type : Feedwater line(16B) guillotine break **(just after hot shutdown condition)**
Break Area :2.234(ft^2)
Break location : Volume number 71

				Initial Conditions					
49	Northwest quadrant around A-SG in A-SG compartment:between EL 73'-1" and 83'-9"	10.67	420	120	14.396	0	7.00	10	42.9
50	Northeast quadrant around A-SG in A-SG compartment:between EL 73'-1" and 83'-9"	10.67	888	120	14.396	0	5.84	10	71.2
51	Southeast quadrant around A-SG in A-SG compartment:between EL 73'-1" and 83'-9"	10.67	965	120	14.396	0	6.96	10	43.7
52	Southwest quadrant around A-SG in A-SG compartment:between EL 73'-1" and 83'-9"	10.67	474	120	14.396	0	7.13	10	40.3
53	Northwest quadrant around A-SG in A-SG compartment:between EL 83'-9" and 95'-1"	11.33	327	120	14.396	0	7.34	35	376.8
54	Northeast quadrant around A-SG in A-SG compartment:between EL 83'-9" and 95'-1"	11.33	789	120	14.396	0	6.66	35	425.5
55	Southwest quadrant around A-SG in A-SG compartment:between EL 83'-9" and 95'-1"	11.33	412	120	14.396	0	14.60	35	139.7

Table A-10 Steam Generator Compartment Nodal Description

D. Break Type : Feedwater line(16B) guillotine break **(just after hot shutdown condition)**
Break Area :2.234(ft^2)
Break location : Volume number 71

				Initial Conditions					
56	Southeast quadrant around A-SG in A-SG compartment:between EL 83'-9" and 88'-11.28"	5.19	36	120	14.396	0	32.91	35	6.4
57		5.19	42	120	14.396	0	32.90	35	6.4
58		5.19	70	120	14.396	0	32.94	35	6.3
59		5.19	15	120	14.396	0	34.42	-	-
60		5.19	26	120	14.396	0	33.24	-	-
61		5.19	26	120	14.396	0	33.38	-	-
62		5.19	47	120	14.396	0	33.14	35	5.6
63		5.19	66	120	14.396	0	32.94	35	6.3
64		5.19	40	120	14.396	0	32.89	35	6.4
65		5.19	34	120	14.396	0	32.88	35	6.4
66	Southeast quadrant around A-SG in A-SG compartment:between EL 88'-11.28" and 92'-8.74"	3.79	27	120	14.396	0	33.08	35	5.8
67		3.79	31	120	14.396	0	33.39	35	4.8
68		3.79	28	120	14.396	0	34.51	-	-
69		3.79	23	120	14.396	0	33.83	35	3.5
70		3.79	6	120	14.396	0	92.09	-	-
71		3.79	14	120	14.396	0	139.07	-	-
72		3.79	15	120	14.396	0	48.55	-	-
73		3.79	21	120	14.396	0	35.01	-	-
74		3.79	26	120	14.396	0	33.88	35	3.3

Table A-10 Steam Generator Compartment Nodal Description

D. Break Type : Feedwater line(16B) guillotine break **(just after hot shutdown condition)**
Break Area :2.234(ft^2)
Break location : Volume number 71

				Initial Conditions					
75		3.79	28	120	14.396	0	34.48	-	-
76		3.79	20	120	14.396	0	33.90	35	3.2
77		3.79	29	120	14.396	0	33.39	35	4.8
78		3.79	25	120	14.396	0	33.06	35	5.9
79	Southeast quadrant around A-SG in A-SG compartment:between EL 92'-8.74" and 95'-1"	2.35	17	120	14.396	0	33.16	35	5.5
80		2.35	19	120	14.396	0	33.21	35	5.4
81		2.35	32	120	14.396	0	33.38	35	4.9
82		2.35	7	120	14.396	0	37.41	-	-
83		2.35	12	120	14.396	0	35.60	-	-
84		2.35	12	120	14.396	0	34.64	-	-
85		2.35	35	120	14.396	0	33.59	35	4.2
86		2.35	30	120	14.396	0	33.29	35	5.1
87		2.35	18	120	14.396	0	33.10	35	5.7
88		2.35	15	120	14.396	0	33.07	35	5.8
89	Northwest quadrant around A-SG in A-SG compartment:between EL 95'-1" and 101'-0"	5.92	143	120	14.396	0	1.37	35	2454.7
90	Northeast quadrant around A-SG in A-SG compartment:between EL 95'-1" and 101'-0"	5.92	388	120	14.396	0	3.39	35	932.4

Table A-10 Steam Generator Compartment Nodal Description

D. Break Type : Feedwater line(16B) guillotine break **(just after hot shutdown condition)**
Break Area :2.234(ft^2)
Break location : Volume number 71

				Initial Conditions					
91	Southeast quadrant around A-SG in A-SG compartment:between EL 95'-1" and 101'-0"	5.92	445	120	14.396	0	9.65	35	262.7
92	Southwest quadrant around A-SG in A-SG compartment:between EL 95'-1" and 101'-0"	5.92	194	120	14.396	0	3.65	35	858.9
93	Northwest quadrant around A-SG in A-SG compartment:between EL 101'-0" and 112'-0"	11.00	318	120	14.396	0	0.22	35	15809.1
94	Northeast quadrant around A-SG in A-SG compartment:between EL 101'-0" and 112'-0"	11.00	741	120	14.396	0	1.51	35	2217.9
95	Southeast quadrant around A-SG in A-SG compartment:between EL 101'-0" and 112'-0"	11.00	911	120	14.396	0	5.67	35	517.3
96	Southwest quadrant around A-SG in A-SG compartment:between EL 101'-0" and 112'-0"	11.00	400	120	14.396	0	1.74	35	1911.5
~~97~~	~~B-SG compartment~~	~~200~~	~~47000~~	~~120~~	~~14.396~~	~~0~~	~~0.00~~	-	-
~~98~~	~~C/V reactor coolant drain tank compartment~~	~~200~~	~~3086~~	~~120~~	~~14.396~~	~~0~~	~~0.00~~	-	-

Table A-10 Steam Generator Compartment Nodal Description

D. Break Type : Feedwater line(16B) guillotine break **(just after hot shutdown condition)**
Break Area :2.234(ft^2)
Break location : Volume number 71

				Initial Conditions					
99	Containment building free volume	200	2790086	120	14.396	0	0.00	-	-

Table A-11 Steam Generator Compartment Vent Path Description

D. Break Type : Feedwater line(16B) guillotine break**(just after hot shutdown condition)**
Break Area : 2.234(ft^2)
Break location : Volume number 71

Vent Path No.	Volume No.		Description of Vent Path Flow		Area (ft^2)	Inertia Length (ft)	Hydraulic Diameter (ft)	Friction Length (ft)	Loss Coefficient K			
	From	To	Choked	Unchoked					Turning and Obstruction	Expansion	Contraction	Total
1	V1	V2		x	96.72	7.47	8.65	8.96	0.0	1.0	0.5	1.50
2	V1	V4		x	129.70	8.68	9.27	10.42	0.0	1.0	0.5	1.50
~~3~~	~~V1~~	~~V98~~		~~x~~	~~61.86~~	~~7.13~~	~~7.86~~	~~8.56~~	~~0.0~~	~~1.0~~	~~0.5~~	~~1.50~~
4	V2	V3		x	62.97	9.87	3.88	11.84	0.0	1.0	0.5	1.50
5	V3	V4		x	66.68	10.36	4.4	12.43	0.0	1.0	0.5	1.50
6	V3	V6		x	142.53	11.93	10.75	14.32	0.0	1.0	0.5	1.50
7	V3	V99		x	30.94	20.56	5.46	24.67	3.5	0.0	0.5	4.00
8	V4	V5		x	163.80	12.5	10.52	15	0.0	1.0	0.5	1.50
~~9~~	~~V4~~	~~V98~~		~~x~~	~~28.22~~	~~9.32~~	~~4.36~~	~~11.18~~	~~0.0~~	~~1.0~~	~~0.5~~	~~1.50~~
10	V5	V6		x	76.50	11.69	5.8	14.03	0.0	1.0	0.5	1.50
11	V5	V8		x	167.99	10.36	8.33	12.43	0.0	1.0	0.5	1.50
12	V6	V7		x	135.63	13.13	11.64	15.76	0.0	1.0	0.5	1.50
13	V7	V8		x	125.67	9.97	8.05	11.96	0.0	1.0	0.5	1.50
~~14~~	~~V7~~	~~V97~~		~~x~~	~~36.65~~	~~11.06~~	~~5.9~~	~~13.27~~	~~0.84~~	~~1.0~~	~~0.5~~	~~2.34~~
~~15~~	~~V8~~	~~V97~~		~~x~~	~~21.94~~	~~10.86~~	~~4.42~~	~~13.03~~	~~0.45~~	~~1.0~~	~~0.5~~	~~1.95~~
16	V1	V9		x	46.77	6.39	6.4	21.6	0.34	0.16	0.2	0.70
17	V2	V10		x	40.68	6.39	7.91	23.73	0.34	0.16	0.2	0.70
18	V3	V11		x	78.56	6.39	10.96	28.03	0.34	0.16	0.2	0.70
19	V4	V12		x	69.44	6.39	9.44	25.88	0.34	0.16	0.2	0.70
20	V5	V13		x	85.84	6.39	9.36	25.77	0.34	0.16	0.2	0.70
21	V6	V14		x	101.84	6.39	9.09	25.39	0.34	0.16	0.2	0.70
22	V7	V15		x	86.47	6.39	11.12	28.25	0.34	0.16	0.2	0.70
23	V8	V16		x	75.48	6.39	8.8	24.98	0.34	0.16	0.2	0.70

Table A-11 Steam Generator Compartment Vent Path Description

D. Break Type : Feedwater line(16B) guillotine break**(just after hot shutdown condition)**
Break Area : 2.234(ft^2)
Break location : Volume number 71

Vent Path No.	Volume No.		Description of Vent Path Flow		Area (ft^2)	Inertia Length (ft)	Hydraulic Diameter (ft)	Friction Length (ft)	Loss Coefficient K			
	From	To	Choked	Unchoked					Turning and Obstruction	Expansion	Contraction	Total
24	V9	V10		x	61.42	10.63	6.55	12.76	0.0	1.0	0.5	1.50
25	V9	V12		x	48.55	11.41	2.96	13.69	0.0	1.0	0.5	1.50
26	V10	V11		x	41.34	13.22	5.22	15.86	0.0	1.0	0.5	1.50
27	V11	V12		x	66.03	13.4	6.15	16.08	0.0	1.0	0.5	1.50
28	V11	V14		x	120.32	10.2	10.31	12.24	0.0	1.0	0.5	1.50
29	V12	V13		x	140.68	7.34	9.95	8.81	0.0	1.0	0.5	1.50
30	V13	V14		x	42.11	16.96	3.42	20.35	0.0	1.0	0.5	1.50
31	V13	V16		x	83.03	14.62	4.15	17.54	0.0	1.0	0.5	1.50
32	V14	V15		x	86.90	18.53	7.85	22.24	0.0	1.0	0.5	1.50
33	V15	V16		x	84.52	14.17	7.7	17	0.0	1.0	0.5	1.50
~~34~~	~~V15~~	~~V97~~		~~x~~	~~13.17~~	~~8.66~~	~~3.07~~	~~10.39~~	~~0.17~~	~~1.0~~	~~0.5~~	~~1.67~~
~~35~~	~~V16~~	~~V97~~		~~x~~	~~16.48~~	~~11.58~~	~~3.62~~	~~13.9~~	~~0.26~~	~~1.0~~	~~0.5~~	~~1.76~~
36	V9	V17		x	43.13	5.64	5.91	19.41	0.34	0.16	0.2	0.70
37	V10	V18		x	37.12	5.64	6.72	20.55	0.34	0.16	0.2	0.70
38	V11	V19		x	72.16	5.64	10.22	25.48	0.34	0.16	0.2	0.70
39	V12	V20		x	67.19	5.64	9.93	25.07	0.34	0.16	0.2	0.70
40	V13	V21		x	48.11	5.64	3.73	16.33	0.34	0.16	0.2	0.70
41	V14	V22		x	21.94	5.64	2.16	14.12	0.34	0.16	0.2	0.70
42	V15	V23		x	49.34	5.64	4.07	16.81	0.34	0.16	0.2	0.70
43	V16	V24		x	48.67	5.64	4.37	17.23	0.34	0.16	0.2	0.70
44	V17	V18		x	57.59	9.96	7.41	11.95	0.0	1.0	0.5	1.50
45	V17	V20		x	69.73	10.82	5.88	12.98	0.0	1.0	0.5	1.50
46	V18	V19		x	38.11	12.4	5.35	14.88	0.0	1.0	0.5	1.50
47	V19	V20		x	61.30	12.67	7.93	15.2	0.0	1.0	0.5	1.50

Table A-11 Steam Generator Compartment Vent Path Description

D. Break Type : Feedwater line(16B) guillotine break**(just after hot shutdown condition)**
Break Area : 2.234(ft^2)
Break location : Volume number 71

Vent Path No.	Volume No.		Description of Vent Path Flow		Area (ft^2)	Inertia Length (ft)	Hydraulic Diameter (ft)	Friction Length (ft)	Loss Coefficient K			
	From	To	Choked	Unchoked					Turning and Obstruction	Expansion	Contraction	Total
48	V19	V22		x	70.67	12.89	8.4	15.47	0.0	1.0	0.5	1.50
49	V19	V99		x	14.75	16.21	3.73	19.45	3.5	0.0	0.5	4.00
50	V20	V21		x	128.07	7.78	8.31	9.34	0.0	1.0	0.5	1.50
51	V21	V22		x	30.56	14.83	4.61	17.8	0.0	1.0	0.5	1.50
52	V21	V24		x	79.37	14.62	6.27	17.54	0.0	1.0	0.5	1.50
53	V22	V23		x	47.78	16.71	5.7	20.05	0.0	1.0	0.5	1.50
54	V23	V24		x	47.11	14.17	6.68	17	0.0	1.0	0.5	1.50
55	V17	V25		x	33.53	4.82	4.96	16.42	0.34	0.16	0.2	0.70
56	V18	V26		x	29.86	4.82	5.77	17.56	0.34	0.16	0.2	0.70
57	V19	V27		x	62.57	4.82	6.8	19.02	0.34	0.16	0.2	0.70
58	V20	V28		x	60.47	4.82	8.53	21.46	0.34	0.16	0.2	0.70
59	V21	V29		x	79.65	5.39	9.88	23.36	0.34	0.16	0.2	0.70
60	V22	V30		x	59.73	7.26	5.44	17.1	0.34	0.16	0.2	0.70
61	V23	V31		x	110.29	7.96	8.54	9.55	0.0	0.0	0.0	0.00
62	V24	V32		x	83.90	6.76	6.79	19	0.34	0.16	0.2	0.70
63	V25	V26		x	35.33	11.65	4.53	13.98	0.0	1.0	0.5	1.50
64	V25	V28		x	55.78	12.5	7.47	15	0.0	1.0	0.5	1.50
65	V26	V27		x	24.22	13.84	4.57	16.61	0.0	1.0	0.5	1.50
66	V27	V28		x	48.82	14.18	6.51	17.02	0.0	1.0	0.5	1.50
67	V27	V30		x	65.64	12.91	6.38	15.49	0.0	1.0	0.5	1.50
68	V27	V99		x	6.00	15.58	2.4	18.7	3.5	0.0	0.5	4.00
69	V28	V29		x	111.76	7.78	9.86	9.34	0.0	1.0	0.5	1.50
70	V29	V30		x	25.86	14.83	4.78	17.8	0.0	1.0	0.5	1.50
71	V29	V32		x	72.03	14.62	8.38	17.54	0.0	1.0	0.5	1.50

Table A-11 Steam Generator Compartment Vent Path Description

D. Break Type : Feedwater line(16B) guillotine break**(just after hot shutdown condition)**
Break Area : 2.234(ft^2)
Break location : Volume number 71

Vent Path No.	Volume No.		Description of Vent Path Flow		Area (ft^2)	Inertia Length (ft)	Hydraulic Diameter (ft)	Friction Length (ft)	Loss Coefficient K			
	From	To	Choked	Unchoked					Turning and Obstruction	Expansion	Contraction	Total
72	V30	V31		x	40.83	16.71	6.34	20.05	0.0	1.0	0.5	1.50
73	V31	V32		x	33.41	14.17	3.2	17	0.0	1.0	0.5	1.50
~~74~~	~~V32~~	~~V97~~		~~x~~	~~13.17~~	~~9.5~~	~~3.07~~	~~11.4~~	~~0.17~~	~~1.0~~	~~0.5~~	~~1.67~~
75	V25	V33		x	62.52	6.59	6.14	7.91	0.0	0.0	0.0	0.00
76	V26	V34		x	50.81	6.59	5.9	7.91	0.0	0.0	0.0	0.00
77	V27	V35		x	111.57	6.59	9.22	7.91	0.0	0.0	0.0	0.00
78	V28	V36		x	101.10	6.59	8.93	7.91	0.0	0.0	0.0	0.00
79	V29	V37		x	100.49	5.61	9.88	21.72	0.34	0.16	0.2	0.70
80	V30	V38		x	84.55	4	10.72	22.9	0.34	0.16	0.2	0.70
81	V31	V39		x	63.33	4	7.77	18.74	0.34	0.16	0.2	0.70
82	V32	V40		x	79.82	5.08	9.73	21.5	0.34	0.16	0.2	0.70
83	V33	V34		x	56.50	10.89	6.56	13.07	0.0	1.0	0.5	1.50
84	V33	V36		x	72.89	12.5	7.06	15	0.0	1.0	0.5	1.50
85	V34	V35		x	47.64	13.84	6.44	16.61	0.0	1.0	0.5	1.50
86	V35	V36		x	60.24	14.18	7.22	17.02	0.0	1.0	0.5	1.50
87	V35	V38		x	78.91	10.14	8.2	12.17	0.0	1.0	0.5	1.50
88	V36	V37		x	91.21	6.16	8.55	7.39	0.0	1.0	0.5	1.50
89	V37	V38		x	21.11	16.96	4.45	20.35	0.0	1.0	0.5	1.50
90	V37	V40		x	58.79	14.62	7.42	17.54	0.0	1.0	0.5	1.50
91	V38	V39		x	33.32	18.53	5.77	22.24	0.0	1.0	0.5	1.50
92	V39	V40		x	32.19	14.17	5.67	17	0.0	1.0	0.5	1.50
~~93~~	~~V39~~	~~V97~~		~~x~~	~~11.81~~	~~8.02~~	~~2.99~~	~~9.62~~	~~0.17~~	~~1.0~~	~~0.5~~	~~1.67~~
94	V33	V41		x	83.14	5.38	8.15	6.46	0.0	0.0	0.0	0.00
95	V34	V42		x	71.41	5.38	8.28	6.46	0.0	0.0	0.0	0.00

Table A-11 Steam Generator Compartment Vent Path Description

D. Break Type : Feedwater line(16B) guillotine break**(just after hot shutdown condition)**
Break Area : 2.234(ft^2)
Break location : Volume number 71

Vent Path No.	Volume No.		Description of Vent Path Flow		Area (ft^2)	Inertia Length (ft)	Hydraulic Diameter (ft)	Friction Length (ft)	Loss Coefficient K			
	From	To	Choked	Unchoked					Turning and Obstruction	Expansion	Contraction	Total
96	V35	V43		x	84.57	5.38	9.02	6.46	0.0	0.0	0.0	0.00
97	V36	V44		x	60.77	5.38	6.61	6.46	0.0	0.0	0.0	0.00
98	V37	V45		x	55.70	5.38	6.43	6.46	0.0	0.0	0.0	0.00
99	V38	V46		x	105.41	5.38	8.78	6.46	0.0	0.0	0.0	0.00
100	V39	V47		x	99.31	5.38	6.57	6.46	0.0	0.0	0.0	0.00
101	V40	V48		x	57.32	5.38	7.19	6.46	0.0	0.0	0.0	0.00
102	V41	V42		x	47.93	7.47	6.39	8.96	0.0	1.0	0.5	1.50
103	V41	V44		x	59.38	8.62	6.58	10.34	0.0	1.0	0.5	1.50
104	V42	V43		x	42.87	8.22	6.26	9.86	0.0	1.0	0.5	1.50
105	V43	V44		x	32.72	7.05	5.64	8.46	0.0	1.0	0.5	1.50
106	V45	V46		x	17.24	15.05	4.1	18.06	0.0	1.0	0.5	1.50
107	V45	V48		x	18.64	11.81	4.29	14.17	0.0	1.0	0.5	1.50
108	V46	V47		x	20.90	17.36	2.8	20.83	0.0	1.0	0.5	1.50
109	V47	V48		x	26.29	13.78	5.12	16.54	0.0	1.0	0.5	1.50
~~110~~	~~V47~~	~~V97~~		~~x~~	~~1.33~~	~~8.02~~	~~1~~	~~9.62~~	~~0.17~~	~~1.0~~	~~0.5~~	~~1.67~~
111	V41	V99		x	42.73	2.42	6.39	2.9	0.94	1.0	0.25	2.19
112	V42	V99		x	64.61	2.42	8.11	2.9	0.43	1.0	0.05	1.48
113	V43	V99		x	82.76	2.42	9.21	2.9	0.23	1.0	0.02	1.25
114	V44	V99		x	30.65	2.42	5.45	2.9	0.95	1.0	0.25	2.2
115	V45	V49		x	33.42	4.69	6.43	18.24	0.34	0.16	0.2	0.70
116	V46	V50		x	63.25	4.69	8.78	21.56	0.34	0.16	0.2	0.70
117	V47	V51		x	65.41	4.69	8.49	21.15	0.34	0.16	0.2	0.70
118	V48	V52		x	34.39	4.69	7.19	19.31	0.34	0.16	0.2	0.70
119	V49	V50		x	26.26	16.93	3.69	20.32	0.0	1.0	0.5	1.50

Table A-11 Steam Generator Compartment Vent Path Description

D. Break Type : Feedwater line(16B) guillotine break**(just after hot shutdown condition)**
Break Area : 2.234(ft^2)
Break location : Volume number 71

Vent Path No.	Volume No.		Description of Vent Path Flow		Area (ft^2)	Inertia Length (ft)	Hydraulic Diameter (ft)	Friction Length (ft)	Loss Coefficient K			
	From	To	Choked	Unchoked					Turning and Obstruction	Expansion	Contraction	Total
120	V49	V52		x	25.92	13.28	3.24	15.94	0.0	1.0	0.5	1.50
121	V50	V51		x	44.11	19.24	4.87	23.09	0.0	1.0	0.5	1.50
122	V51	V52		x	46.23	15.23	5.74	18.28	0.0	1.0	0.5	1.50
123	V49	V53		x	17.85	6.64	3.54	18.07	0.34	0.16	0.2	0.70
124	V50	V54		x	43.06	6.64	5.98	21.51	0.34	0.16	0.2	0.70
125	V52	V55	x		22.48	6.64	4.98	20.1	0.34	0.16	0.2	0.70
126	V53	V54		x	15.36	16.93	2.42	20.32	0.0	1.0	0.5	1.50
127	V53	V55	x		18.65	13.28	2.87	15.94	0.0	1.0	0.5	1.50
128	V53	V89	x		8.57	5.22	2.15	13.26	0.34	0.16	0.2	0.70
129	V54	V90	x		36.76	5.22	4.92	17.17	0.34	0.16	0.2	0.70
130	V55	V92	x		13.99	5.22	2.43	13.66	0.34	0.16	0.2	0.70
131	V51	V56	x		4.31	4.8	2.57	13.02	0.34	0.16	0.2	0.70
132	V51	V57	x		5.04	4.8	2.71	13.21	0.34	0.16	0.2	0.70
133	V51	V58	x		8.33	4.8	3.24	13.96	0.34	0.16	0.2	0.70
134	V51	V59	x		1.75	4.79	1.24	11.14	0.34	0.16	0.2	0.70
135	V51	V60	x		3.05	4.8	1.98	12.18	0.34	0.16	0.2	0.70
136	V51	V61	x		3.05	4.8	1.98	12.18	0.34	0.16	0.2	0.70
137	V51	V62	x		7.36	4.8	2.31	12.65	0.34	0.16	0.2	0.70
138	V51	V63	x		7.82	4.8	3.15	13.83	0.34	0.16	0.2	0.70
139	V51	V64	x		4.74	4.8	2.64	13.11	0.34	0.16	0.2	0.70
140	V51	V65	x		4.04	4.8	2.5	12.92	0.34	0.16	0.2	0.70
141	V54	V56	x		17.74	11.1	4.12	13.32	0.0	1.0	0.5	1.50
142	V56	V57		x	18.98	2.1	4.29	2.52	0.0	0.0	0.0	0.00
143	V57	V58		x	22.94	2.56	4.77	3.07	0.0	0.0	0.0	0.00

Table A-11 Steam Generator Compartment Vent Path Description

D. Break Type : Feedwater line(16B) guillotine break**(just after hot shutdown condition)**
Break Area : 2.234(ft^2)
Break location : Volume number 71

Vent Path No.	Volume No.		Description of Vent Path Flow		Area (ft^2)	Inertia Length (ft)	Hydraulic Diameter (ft)	Friction Length (ft)	Loss Coefficient K			
	From	To	Choked	Unchoked					Turning and Obstruction	Expansion	Contraction	Total
144	V58	V59		x	4.79	4.24	1.57	5.09	0.0	0.0	0.0	0.00
145	V58	V60		x	6.95	3.39	2.13	4.07	0.0	0.0	0.0	0.00
146	V58	V61		x	6.95	3.12	2.13	3.74	0.0	0.0	0.0	0.00
147	V58	V62		x	16.47	4.98	3.94	5.98	0.0	0.0	0.0	0.00
148	V59	V60		x	19.70	1.02	4.38	1.22	0.0	0.0	0.0	0.00
149	V60	V61		x	19.70	1.34	4.38	1.61	0.0	0.0	0.0	0.00
150	V61	V62		x	19.70	3.07	4.38	3.68	0.0	0.0	0.0	0.00
151	V59	V63		x	4.79	4.13	1.57	4.96	0.0	0.0	0.0	0.00
152	V60	V63		x	6.95	3.28	2.13	3.94	0.0	0.0	0.0	0.00
153	V61	V63		x	6.95	3.14	2.13	3.77	0.0	0.0	0.0	0.00
154	V62	V63		x	15.06	5	3.72	6	0.0	0.0	0.0	0.00
155	V63	V64		x	21.86	2.52	4.65	3.02	0.0	0.0	0.0	0.00
156	V64	V65		x	17.96	2.08	4.15	2.5	0.0	0.0	0.0	0.00
157	V65	V55	x		16.75	7.1	3.98	8.52	0.0	1.0	0.5	1.50
158	V56	V66		x	7.19	4.5	2.57	5.4	0.0	0.0	0.0	0.00
159	V57	V67		x	8.40	4.5	2.71	5.4	0.0	0.0	0.0	0.00
160	V58	V68		x	7.63	4.5	2.65	5.4	0.0	0.0	0.0	0.00
161	V58	V69		x	6.25	4.5	2.19	5.4	0.0	0.0	0.0	0.00
162	V59	V70	x		2.92	4.5	1.24	5.4	0.0	0.0	0.0	0.00
163	V60	V71	x		5.08	4.5	1.98	5.4	0.0	0.0	0.0	0.00
164	V61	V72	x		5.08	4.5	1.98	5.4	0.0	0.0	0.0	0.00
165	V62	V73		x	5.30	4.5	1.19	5.4	0.0	0.0	0.0	0.00
166	V62	V74		x	6.97	4.5	2.55	5.4	0.0	0.0	0.0	0.00
167	V63	V75		x	7.63	4.5	2.65	5.4	0.0	0.0	0.0	0.00

Table A-11 Steam Generator Compartment Vent Path Description

D. Break Type : Feedwater line(16B) guillotine break**(just after hot shutdown condition)**
Break Area : 2.234(ft^2)
Break location : Volume number 71

Vent Path No.	Volume No.		Description of Vent Path Flow		Area (ft^2)	Inertia Length (ft)	Hydraulic Diameter (ft)	Friction Length (ft)	Loss Coefficient K			
	From	To	Choked	Unchoked					Turning and Obstruction	Expansion	Contraction	Total
168	V63	V76		x	5.41	4.5	2	5.4	0.0	0.0	0.0	0.00
169	V64	V77		x	7.90	4.5	2.64	5.4	0.0	0.0	0.0	0.00
170	V65	V78		x	6.73	4.5	2.5	5.4	0.0	0.0	0.0	0.00
171	V54	V66	x		12.95	11.1	3.59	13.32	0.0	1.0	0.5	1.50
172	V66	V67		x	13.85	2.1	3.72	2.52	0.0	0.0	0.0	0.00
173	V67	V68	x		13.36	2.16	3.65	2.59	0.0	0.0	0.0	0.00
174	V67	V69		x	3.38	4.08	1.44	4.9	0.0	0.0	0.0	0.00
175	V68	V69		x	10.99	2.73	3.29	3.28	0.0	0.0	0.0	0.00
176	V68	V70	x		3.49	3.39	1.48	4.07	0.0	0.0	0.0	0.00
177	V68	V71	x		5.07	2.97	1.98	3.56	0.0	0.0	0.0	0.00
178	V68	V72	x		5.07	3.67	1.98	4.4	0.0	0.0	0.0	0.00
179	V69	V73		x	8.12	3.45	2.74	4.14	0.0	0.0	0.0	0.00
180	V69	V74		x	3.90	4.6	1.62	5.52	0.0	0.0	0.0	0.00
181	V70	V71	x		8.09	1.02	1.34	1.22	0.0	0.0	0.0	0.00
182	V71	V72	x		11.54	1.34	2.18	1.61	0.0	0.0	0.0	0.00
183	V72	V73	x		11.54	1.74	2.18	2.09	0.0	0.0	0.0	0.00
184	V70	V75	x		3.49	3.39	1.48	4.07	0.0	0.0	0.0	0.00
185	V71	V75	x		5.07	2.97	1.98	3.56	0.0	0.0	0.0	0.00
186	V72	V75	x		5.07	3.67	1.98	4.4	0.0	0.0	0.0	0.00
187	V73	V74		x	9.36	2.4	1.87	2.88	0.0	0.0	0.0	0.00
188	V73	V76		x	8.12	3.47	2.74	4.16	0.0	0.0	0.0	0.00
189	V74	V76		x	2.87	4.62	1.26	5.54	0.0	0.0	0.0	0.00
190	V75	V76		x	10.99	2.62	3.29	3.14	0.0	0.0	0.0	0.00
191	V75	V77	x		13.36	2.14	3.65	2.57	0.0	0.0	0.0	0.00

Table A-11 Steam Generator Compartment Vent Path Description

D. Break Type : Feedwater line(16B) guillotine break**(just after hot shutdown condition)**
Break Area : 2.234(ft^2)
Break location : Volume number 71

Vent Path No.	Volume No.		Description of Vent Path Flow		Area (ft^2)	Inertia Length (ft)	Hydraulic Diameter (ft)	Friction Length (ft)	Loss Coefficient K			
	From	To	Choked	Unchoked					Turning and Obstruction	Expansion	Contraction	Total
192	V76	V77		x	2.60	4.04	1.16	4.85	0.0	0.0	0.0	0.00
193	V77	V78		x	13.11	2.08	3.62	2.5	0.0	0.0	0.0	0.00
194	V78	V55	x		12.22	7.1	3.48	8.52	0.0	1.0	0.5	1.50
195	V66	V79		x	7.19	3.07	2.57	3.68	0.0	0.0	0.0	0.00
196	V67	V80		x	8.40	3.07	2.71	3.68	0.0	0.0	0.0	0.00
197	V68	V81		x	7.63	3.07	2.65	3.68	0.0	0.0	0.0	0.00
198	V69	V81		x	6.25	3.07	2.19	3.68	0.0	0.0	0.0	0.00
199	V70	V82	x		2.92	3.07	1.24	3.68	0.0	0.0	0.0	0.00
200	V71	V83	x		5.08	3.07	1.98	3.68	0.0	0.0	0.0	0.00
201	V72	V84	x		5.08	3.07	1.98	3.68	0.0	0.0	0.0	0.00
202	V73	V85		x	8.14	3.07	2.74	3.68	0.0	0.0	0.0	0.00
203	V74	V85		x	6.97	3.07	2.55	3.68	0.0	0.0	0.0	0.00
204	V75	V86		x	7.63	3.07	2.65	3.68	0.0	0.0	0.0	0.00
205	V76	V86		x	5.41	3.07	2	3.68	0.0	0.0	0.0	0.00
206	V77	V87		x	7.90	3.07	2.64	3.68	0.0	0.0	0.0	0.00
207	V78	V88		x	6.73	3.07	2.5	3.68	0.0	0.0	0.0	0.00
208	V54	V79	x		8.05	11.1	2.79	13.32	0.0	1.0	0.5	1.50
209	V79	V80		x	8.61	2.1	2.86	2.52	0.0	0.0	0.0	0.00
210	V80	V81	x		10.41	2.56	3.07	3.07	0.0	0.0	0.0	0.00
211	V81	V82		x	2.17	4.24	1.32	5.09	0.0	0.0	0.0	0.00
212	V81	V83	x		3.15	3.39	1.71	4.07	0.0	0.0	0.0	0.00
213	V81	V84		x	3.15	3.12	1.71	3.74	0.0	0.0	0.0	0.00
214	V81	V85		x	7.47	4.98	2.7	5.98	0.0	0.0	0.0	0.00
215	V82	V83		x	8.94	1.02	2.91	1.22	0.0	0.0	0.0	0.00

Table A-11 Steam Generator Compartment Vent Path Description

D. Break Type : Feedwater line(16B) guillotine break**(just after hot shutdown condition)**
Break Area : 2.234(ft^2)
Break location : Volume number 71

Vent Path No.	Volume No.		Description of Vent Path Flow		Area (ft^2)	Inertia Length (ft)	Hydraulic Diameter (ft)	Friction Length (ft)	Loss Coefficient K			
	From	To	Choked	Unchoked					Turning and Obstruction	Expansion	Contraction	Total
216	V83	V84	x		8.94	1.34	2.91	1.61	0.0	0.0	0.0	0.00
217	V84	V85		x	8.94	3.07	2.91	3.68	0.0	0.0	0.0	0.00
218	V82	V86	x		2.17	4.13	1.32	4.96	0.0	0.0	0.0	0.00
219	V83	V86	x		3.15	3.28	1.71	3.94	0.0	0.0	0.0	0.00
220	V84	V86		x	3.15	3.14	1.71	3.77	0.0	0.0	0.0	0.00
221	V85	V86		x	65.64	5	24.98	6	0.0	0.0	0.0	0.00
222	V86	V87	x		9.92	2.52	3.02	3.02	0.0	0.0	0.0	0.00
223	V87	V88		x	8.15	2.08	2.8	2.5	0.0	0.0	0.0	0.00
224	V88	V55	x		7.60	7.1	2.72	8.52	0.0	1.0	0.5	1.50
225	V79	V91	x		2.16	2.52	1.83	7.41	0.34	0.16	0.2	0.70
226	V80	V91	x		2.55	2.52	1.36	6.75	0.34	0.16	0.2	0.70
227	V81	V91	x		6.35	3.35	1.72	7.26	0.34	0.16	0.2	0.70
228	V82	V91	x		1.75	2.52	1.24	6.58	0.34	0.16	0.2	0.70
229	V83	V91	x		3.05	2.52	1.98	7.62	0.34	0.16	0.2	0.70
230	V84	V91	x		3.22	3.44	1.71	7.24	0.34	0.16	0.2	0.70
231	V85	V91	x		6.77	4.13	1.56	4.96	0.0	0.0	0.0	0.00
232	V86	V91	x		9.29	2.97	3.15	9.27	0.34	0.16	0.2	0.70
233	V87	V91	x		4.74	2.52	2.64	8.55	0.34	0.16	0.2	0.70
234	V88	V91	x		2.77	2.52	1.7	7.23	0.34	0.16	0.2	0.70
235	V89	V90		x	8.02	16.93	2.21	20.32	0.0	1.0	0.5	1.50
236	V89	V92		x	9.74	12.59	2.58	15.11	0.0	1.0	0.5	1.50
237	V89	V99		x	13.23	11.34	3.25	13.61	0.0	1.0	0.5	1.50
238	V89	V99		x	27.82	5.99	4.02	7.19	0.0	1.0	0.5	1.50
239	V89	V99		x	36.11	8.4	5.57	10.08	0.0	1.0	0.5	1.50

Table A-11 Steam Generator Compartment Vent Path Description

D. Break Type : Feedwater line(16B) guillotine break**(just after hot shutdown condition)**
Break Area : 2.234(ft^2)
Break location : Volume number 71

Vent Path No.	Volume No.		Description of Vent Path Flow		Area (ft^2)	Inertia Length (ft)	Hydraulic Diameter (ft)	Friction Length (ft)	Loss Coefficient K			
	From	To	Choked	Unchoked					Turning and Obstruction	Expansion	Contraction	Total
240	V90	V91	x		16.16	19.24	2.91	23.09	0.0	1.0	0.5	1.50
241	V90	V99		x	46.62	10.29	6.2	12.35	0.0	1.0	0.5	1.50
242	V90	V99		x	26.61	5.87	4.65	7.04	0.0	1.0	0.5	1.50
243	V91	V92	x		14.58	15.23	2.62	18.28	0.0	1.0	0.5	1.50
244	V92	V99		x	45.84	6.21	5.38	7.45	0.0	1.0	0.5	1.50
245	V89	V93		x	17.85	5.12	3.54	15.02	0.34	0.16	0.2	0.70
246	V90	V94		x	43.06	5.12	5.98	18.46	0.34	0.16	0.2	0.70
247	V91	V95	x		62.67	6.24	7.68	20.86	0.34	0.16	0.2	0.70
248	V92	V96		x	22.48	5.12	4.98	17.05	0.34	0.16	0.2	0.70
249	V93	V94		x	14.91	16.93	2.41	20.32	0.0	1.0	0.5	1.50
250	V93	V96		x	18.10	12.59	2.86	15.11	0.0	1.0	0.5	1.50
251	V93	V99		x	24.59	11.34	3.72	13.61	0.0	1.0	0.5	1.50
252	V93	V99		x	87.07	5.99	9.21	7.19	0.0	1.0	0.5	1.50
253	V93	V99		x	77.44	8.4	8.59	10.08	0.0	1.0	0.5	1.50
254	V94	V95		x	37.61	19.24	5.22	23.09	0.0	1.0	0.5	1.50
255	V94	V99		x	100.40	10.29	9.98	12.35	0.0	1.0	0.5	1.50
256	V94	V99		x	90.07	5.87	9.39	7.04	0.0	1.0	0.5	1.50
257	V95	V96		x	35.51	15.23	4.99	18.28	0.0	1.0	0.5	1.50
258	V96	V99		x	95.07	6.21	9.68	7.45	0.0	1.0	0.5	1.50
259	V93	V99		x	29.75	5.5	3.54	6.6	0.0	1.0	0.0	1.00
260	V94	V99		x	71.76	5.5	5.98	6.6	0.0	1.0	0.0	1.00
261	V95	V99		x	74.61	5.5	6.03	6.6	0.0	1.0	0.0	1.00
262	V96	V99		x	37.46	5.5	4.98	6.6	0.0	1.0	0.0	1.00

Table A-12 Mass and Energy Release Rates for Steam Generator Compartment Peak Pressure Analyses

D. Break Type : Feed Water line(16B) guillotine break **(Just after hot shutdown condition)**
Break Area : 2.234(ft^2)
Break location : Volume number 71

Time (s)	SG side		Feedwater Pumps side	
	Mass Release Rate (lbm/s)	Enthalpy (BTU/lbm)	Mass Release Rate (lbm/s)	Enthalpy (BTU/lbm)
0.0	0.0	438.23	2397.22	437.91
0.001	20587.1	438.23	7424.14	437.91
0.12	20587.1	438.23	7424.14	437.91
0.120001	11364.1	563.38	7424.14	437.91
10	11364.1	563.38	7424.14	437.91

Figure A-1 Nodalization scheme for Steam Generator compartment analysis (1/10)

Figure A-2 Nodalization scheme for Steam Generator compartment analysis (2/10)

Figure A-3 Nodalization scheme for Steam Generator compartment analysis (3/10)

Figure A-4 Nodalization scheme for Steam Generator compartment analysis (4/10)

Figure A-5 Nodalization scheme for Steam Generator compartment analysis (5/10)

Figure A-6 Nodalization scheme for Steam Generator compartment analysis (6/10)

Figure A-7 Nodalization scheme for Steam Generator compartment analysis (7/10)

Figure A-8 Nodalization scheme for Steam Generator compartment analysis (8/10)

Figure A-9 Nodalization scheme for Steam Generator compartment analysis (9/10)

Figure A-10 Nodalization scheme for Steam Generator compartment analysis (10/10)

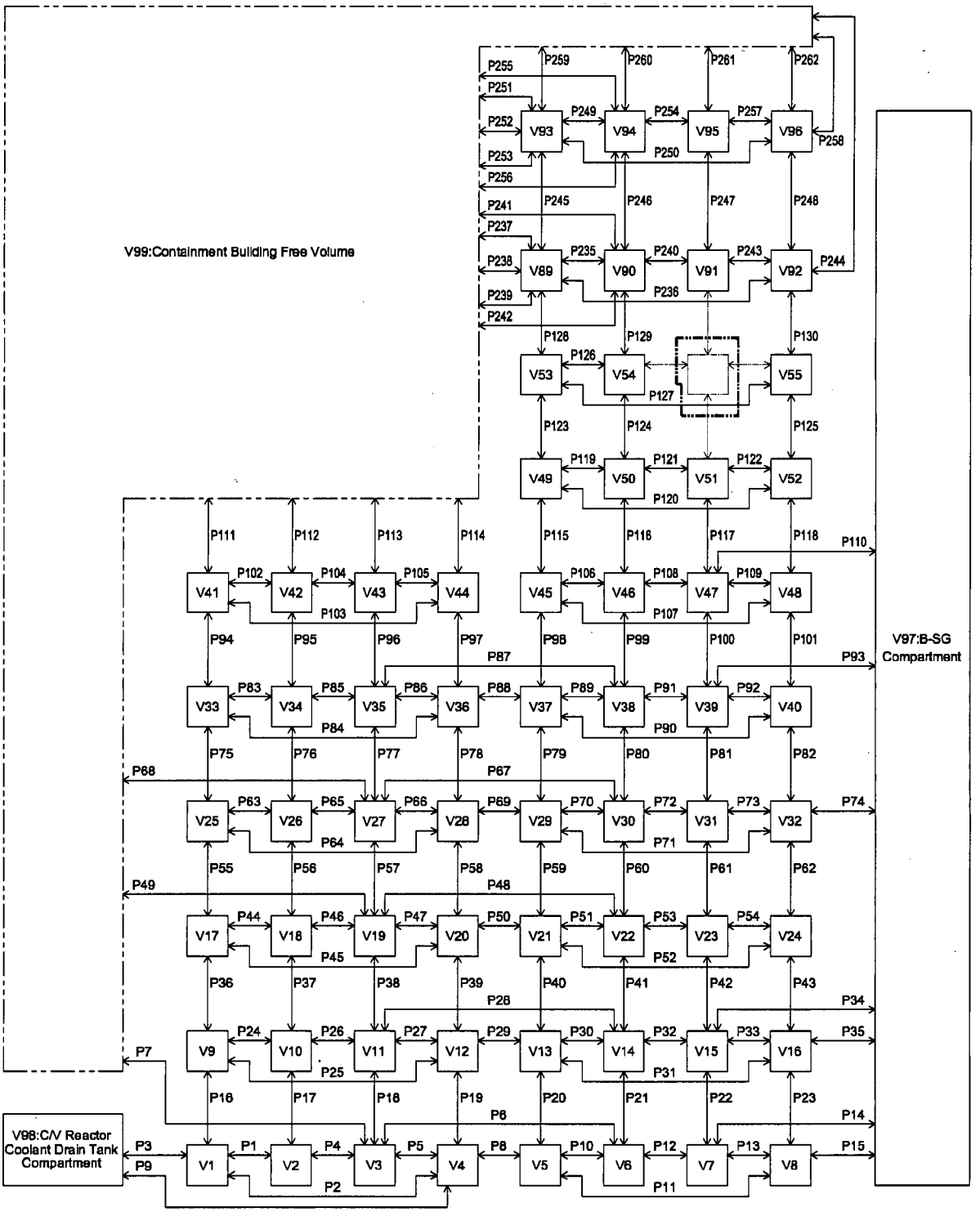

Figure A-11 Nodalization diagram for Steam Generator compartment analysis(1/2)

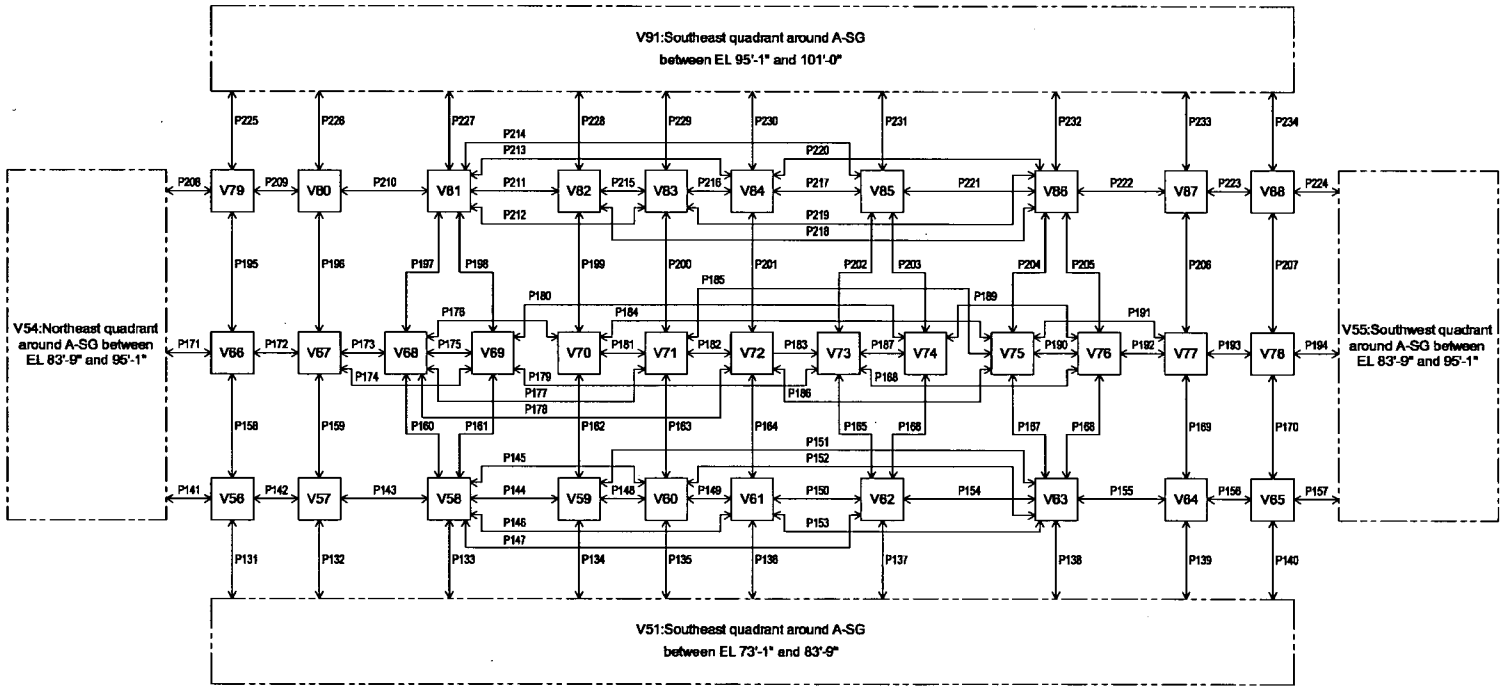

Figure A-12 Nodalization diagram for Steam Generator compartment analysis(2/2)

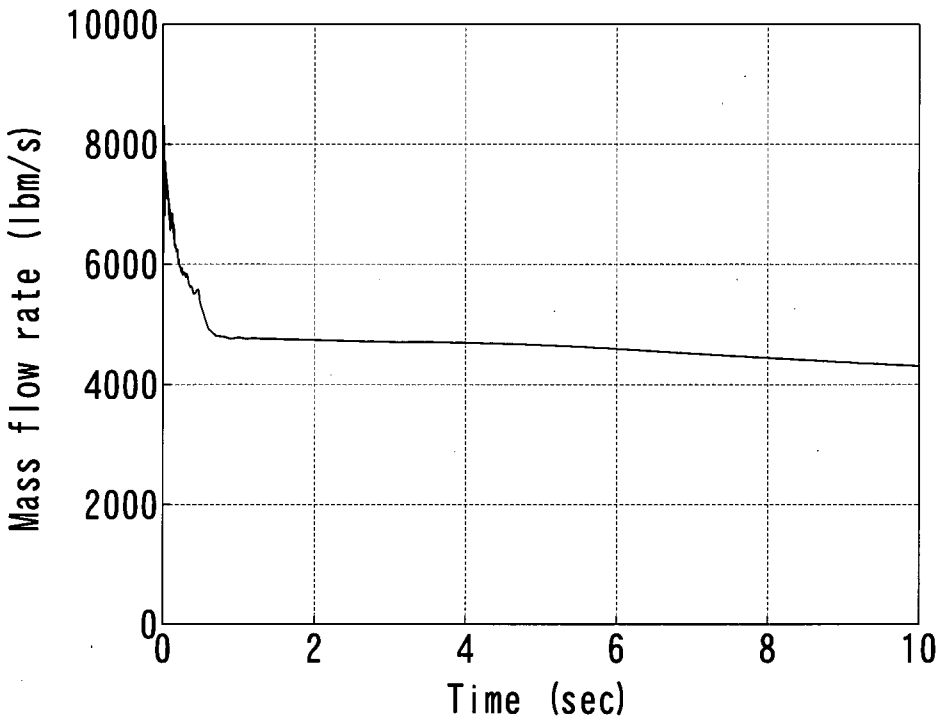

Figure A-13 Short term mass and energy release data for SG compartment RHR pump inlet line break (1/2)

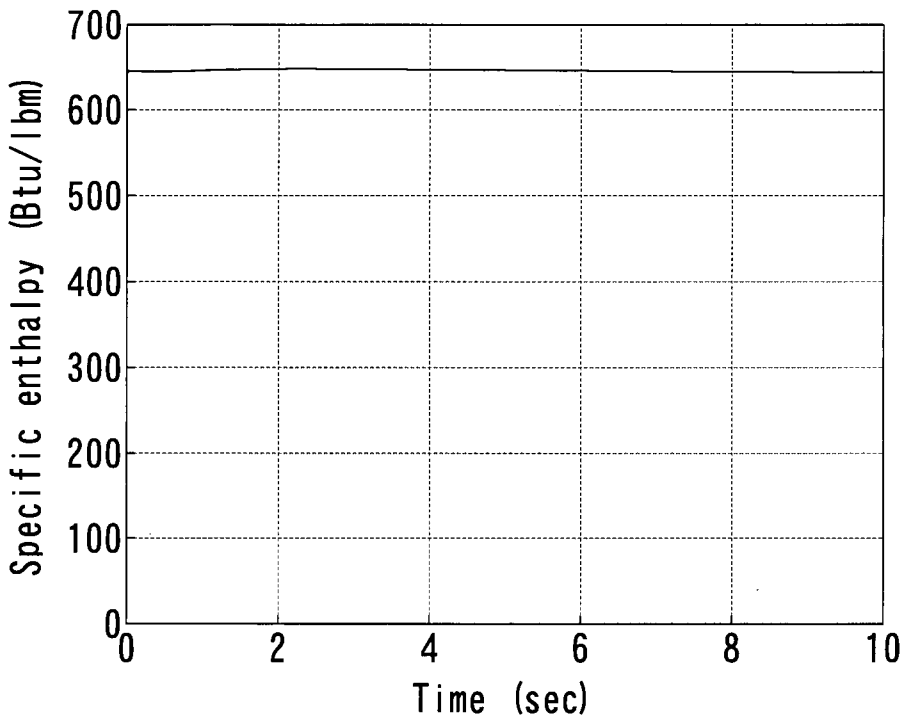

Figure A-14 Short term mass and energy release data for SG compartment RHR pump inlet line break (2/2)

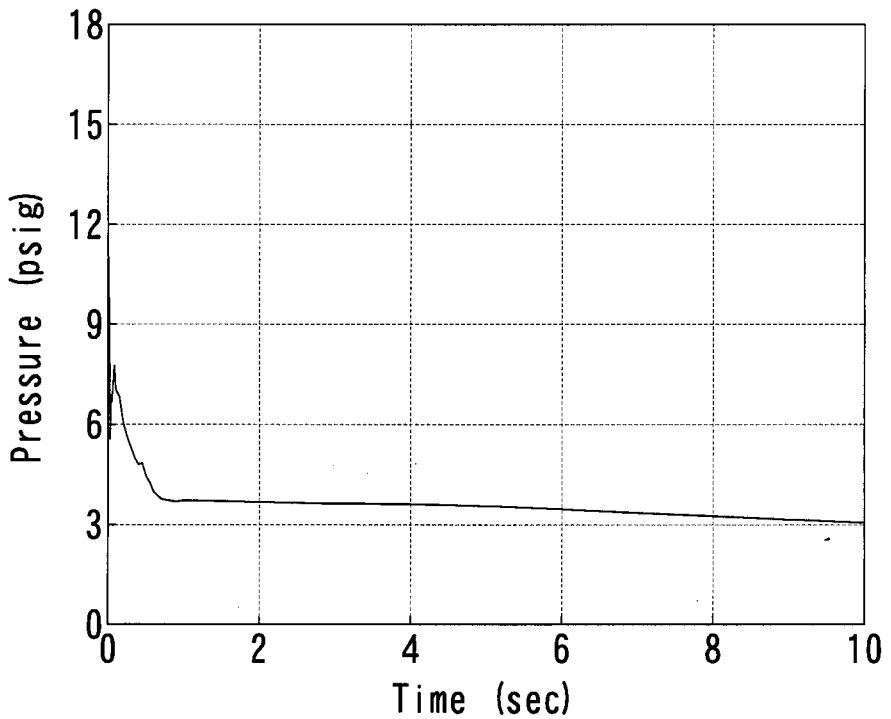

Figure A-15 Pressure transient at the peak pressure node in SG compartment RHR pump inlet line break

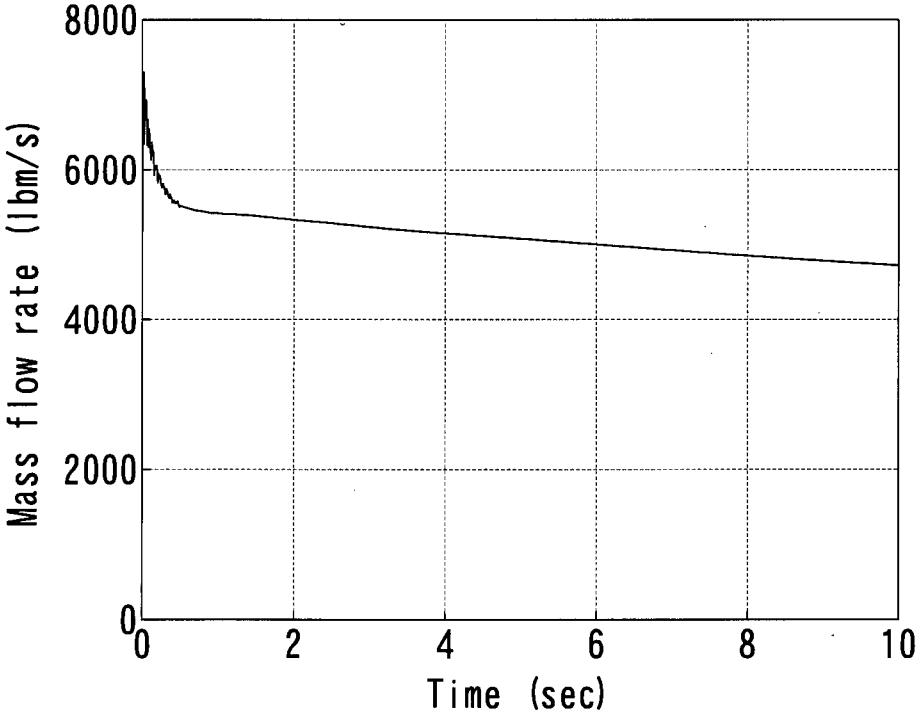

Figure A-16 Short term mass and energy release data for SG compartment RHR pump outlet line break (1/2)

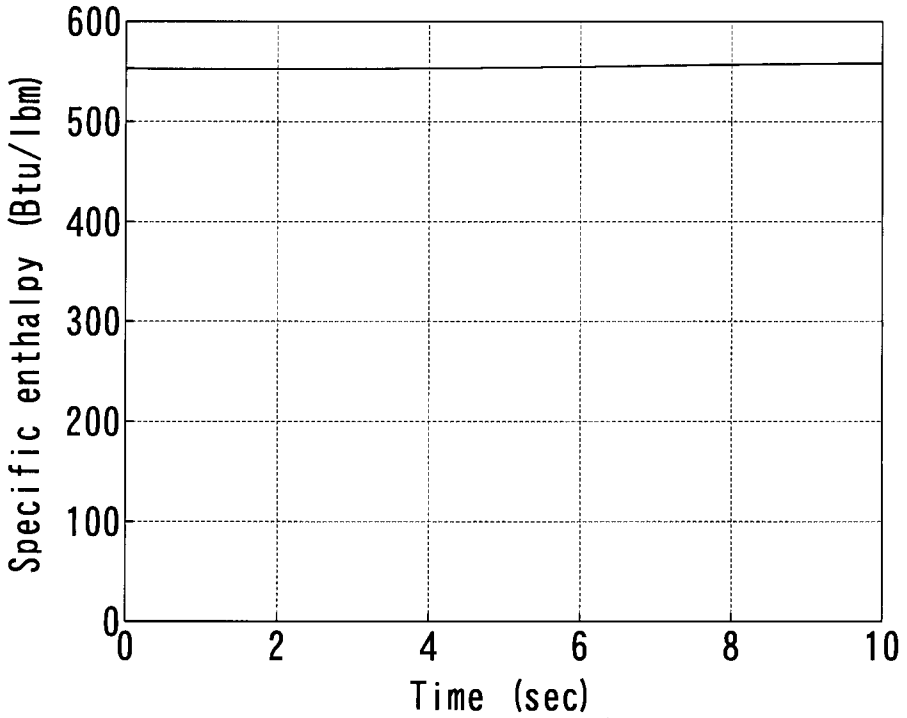

Figure A-17 Short term mass and energy release data for SG compartment RHR pump outlet line break (2/2)

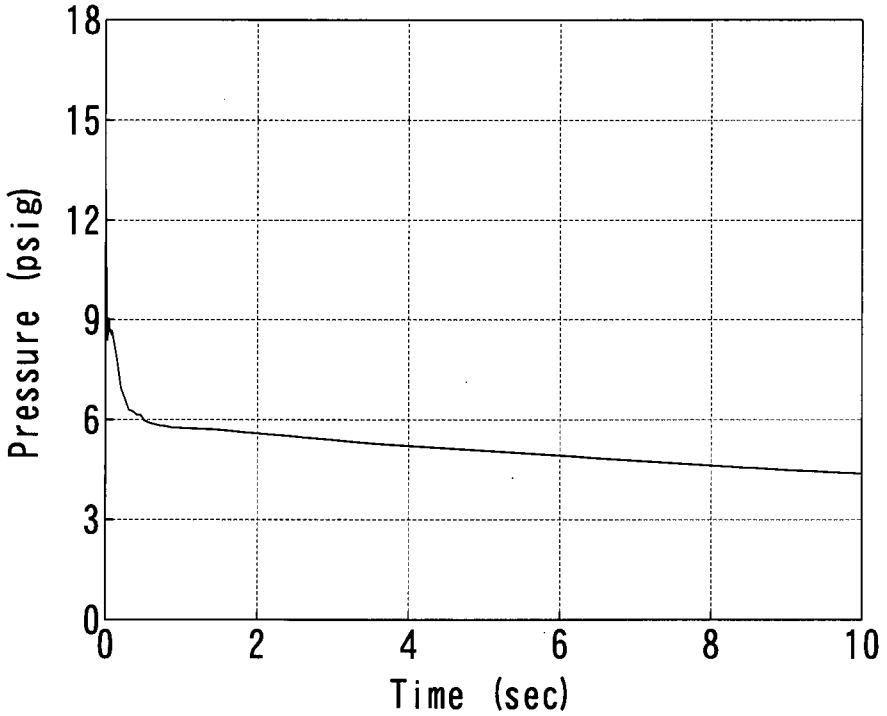

Figure A-18 Pressure transient at the peak pressure node in SG compartment RHR pump outlet line break

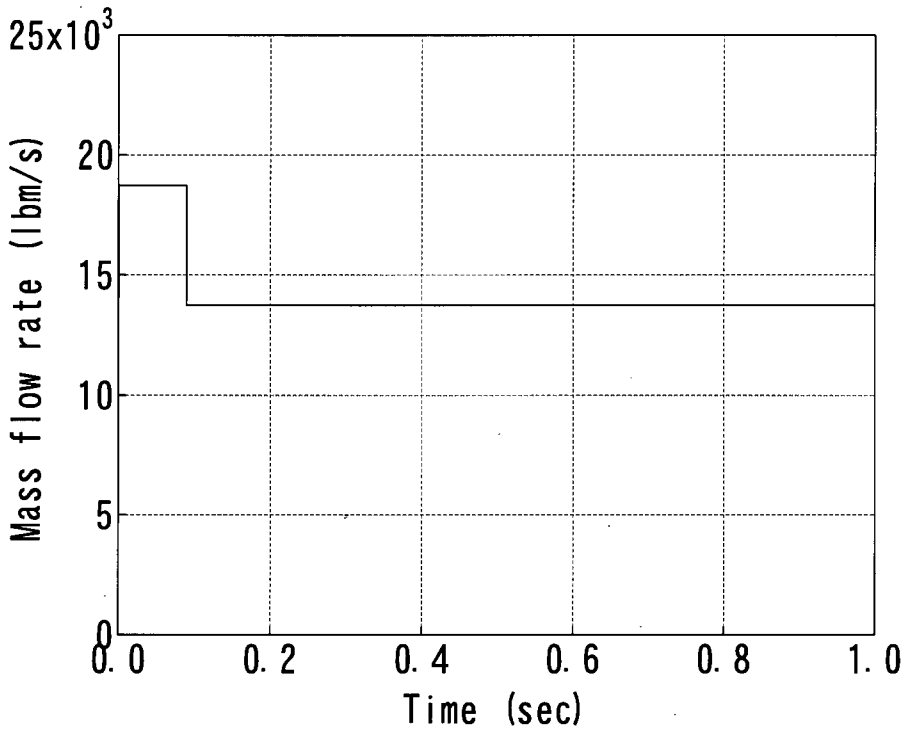

Figure A-19 Short term mass and energy release data for SG compartment Feedwater line break (SG side, full power operating condition) (1/2)

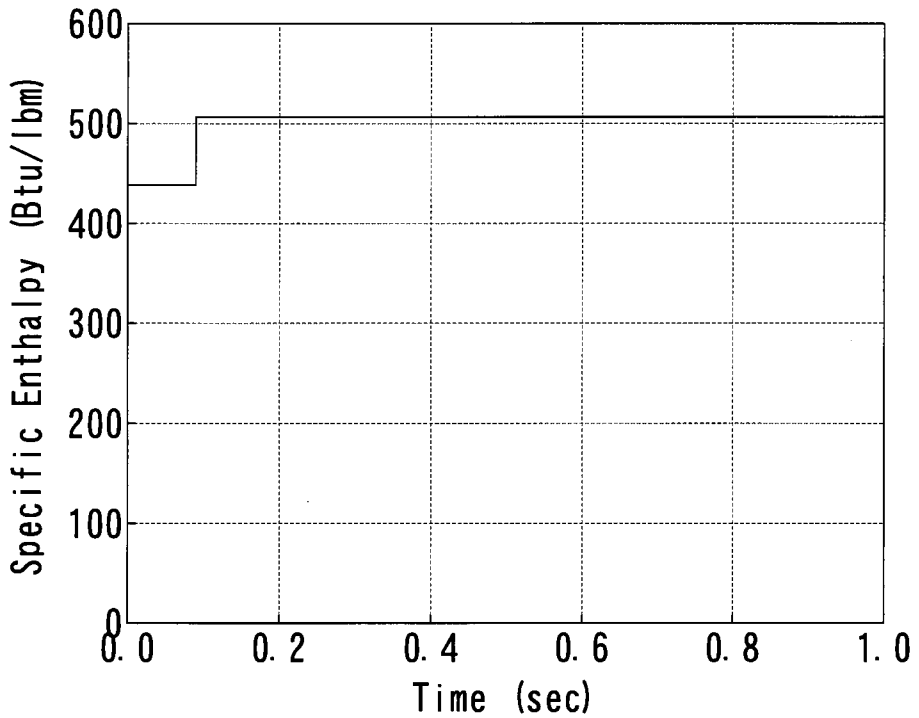

Figure A-20 Short term mass and energy release data for SG compartment Feedwater line break (SG side, full power operating condition) (2/2)

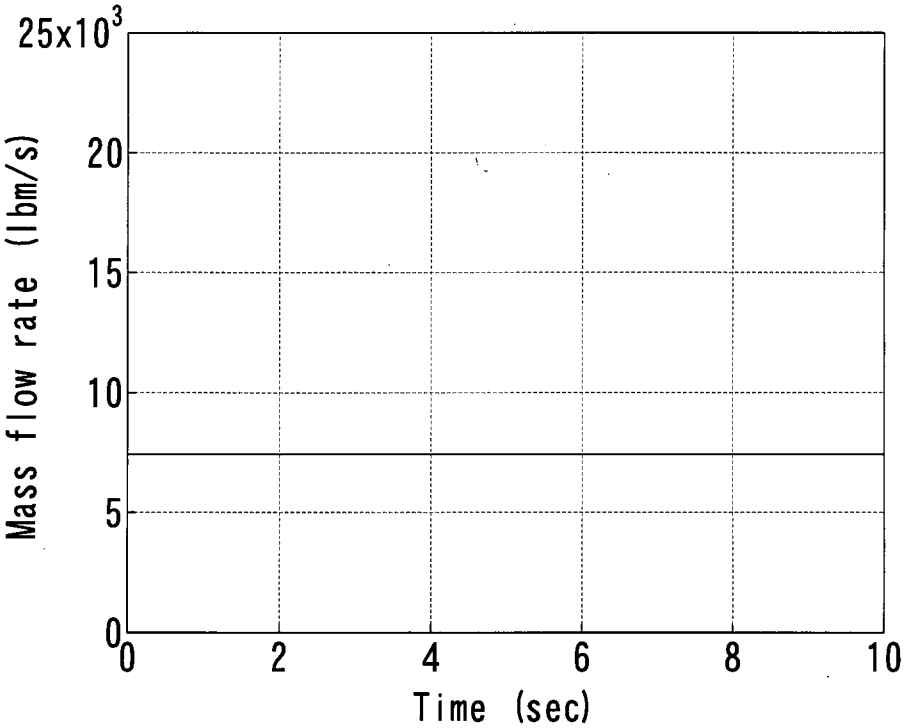

Figure A-21 Short term mass and energy release data for SG compartment Feedwater line break (Feedwater pump side, full power operating condition) (1/2)

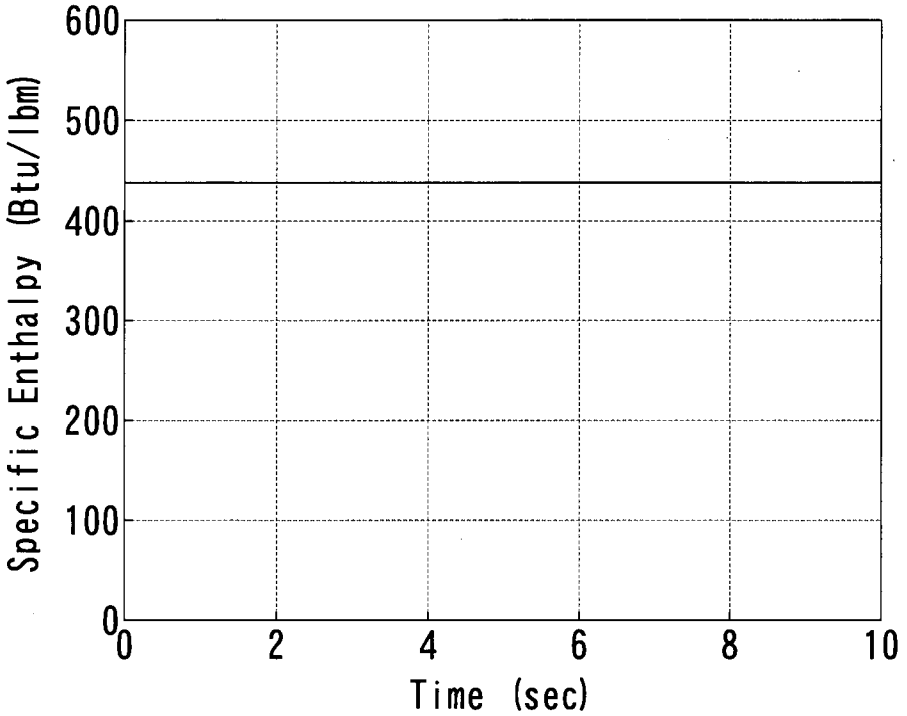

Figure A-22 Short term mass and energy release data for SG compartment Feedwater line break (Feedwater pump side, full power operating condition) (2/2)

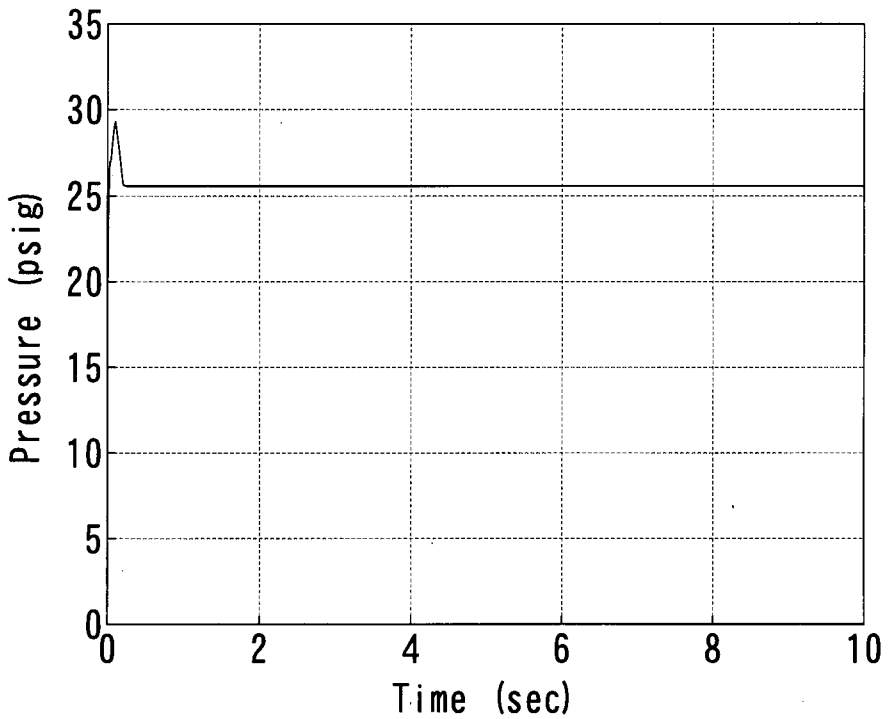

Figure A-23 Pressure transient at the peak pressure node in SG compartment (Feedwater line break, Full power operating condition)

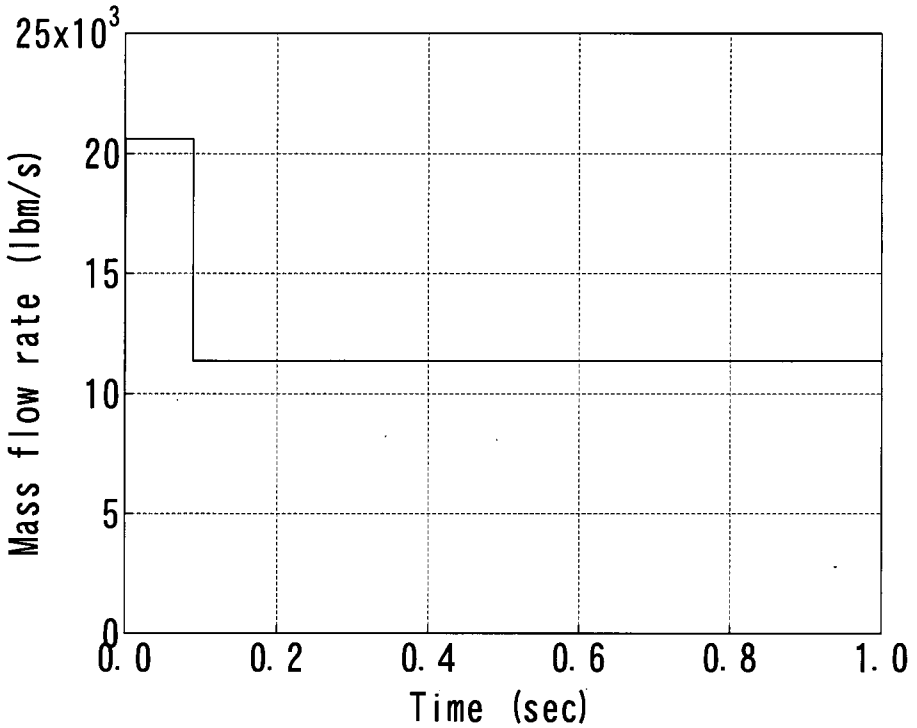

Figure A-24 Short term mass and energy release data for SG compartment Feedwater line break (SG side, just after hot shutdown condition) (1/2)

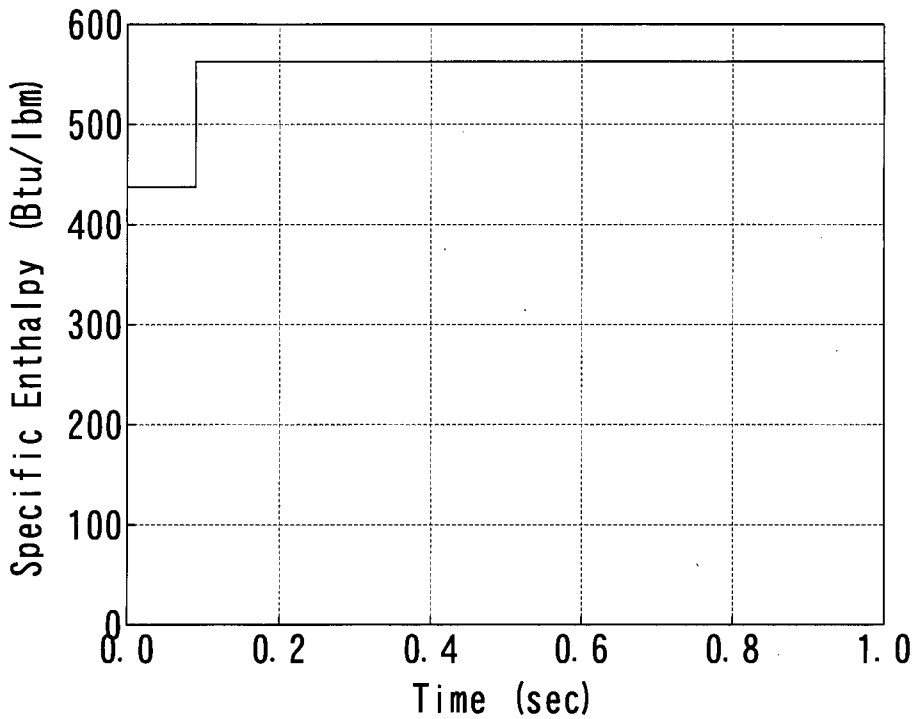

Figure A-25 Short term mass and energy release data for SG compartment Feedwater line break (SG side, just after hot shutdown condition) (2/2)

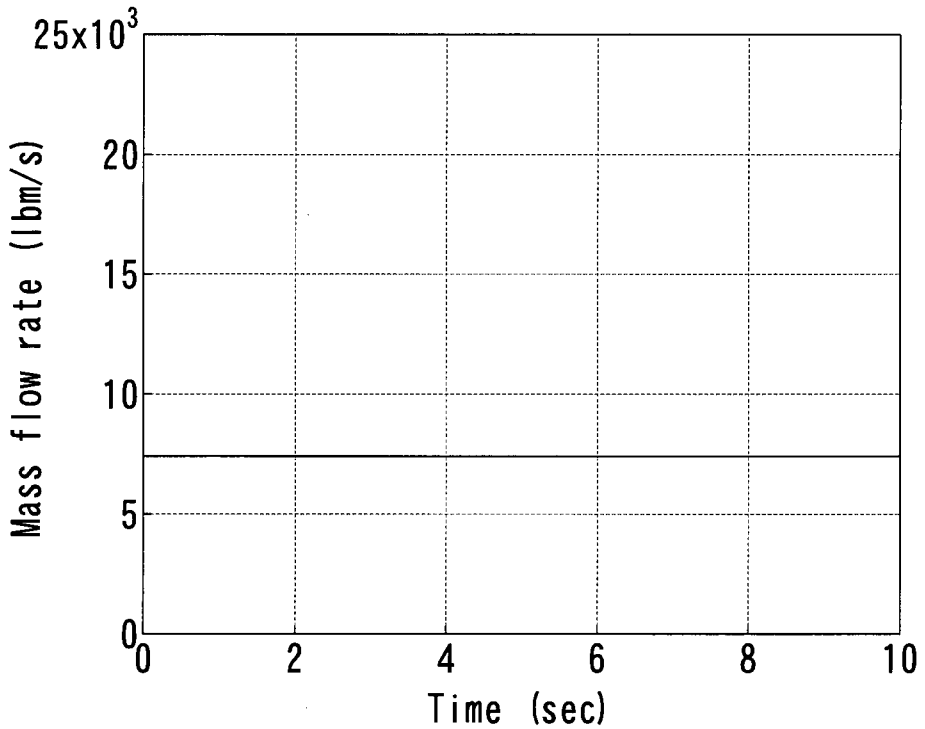

Figure A-26 Short term mass and energy release data for SG compartment Feedwater line break (Feedwater pump side, just after hot shutdown condition) (1/2)

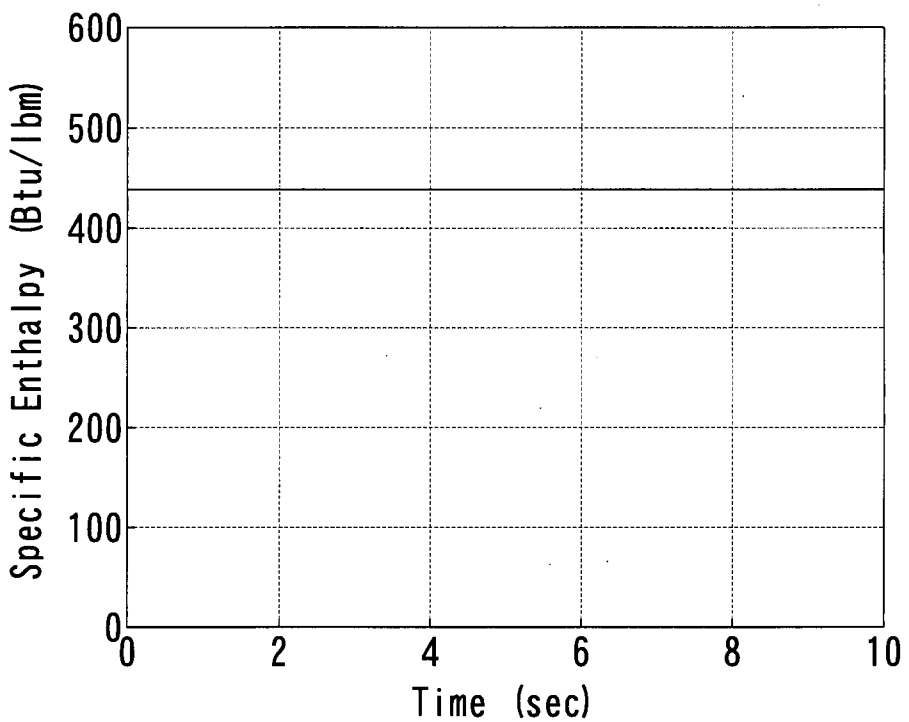

Figure A-27 Short term mass and energy release data for SG compartment Feedwater line break (Feedwater pump side, just after hot shutdown condition) (2/2)

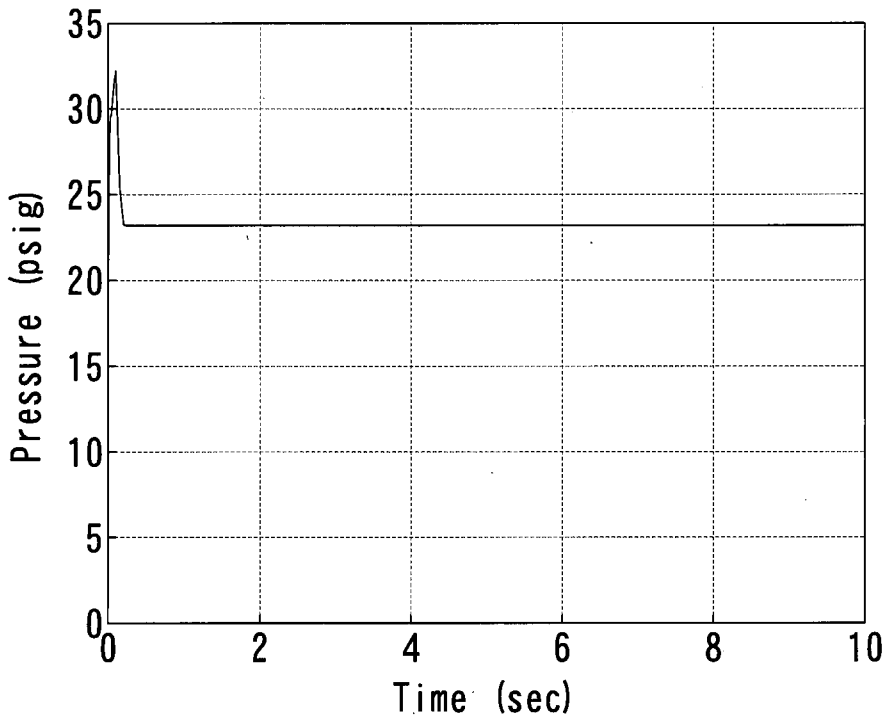

Figure A-28 Pressure transient at the peak pressure node in SG compartment (Feedwater line break, just after hot shutdown condition)

Appendix-B
(Response to RAI No.111-932 February 2nd, 2009)

Detailed information for pressurizer compartment analysis

(Non-proprietary)

List of Tables

Table B-1 Pressurizer compartment Nodal Description 4
Table B-2 Pressurizer Compartment Vent Path Description 7
Table B-3 Mass and Release Rates for Pressurizer Compartment Peak Pressure Analyses 11
Table B-4 Pressurizer compartment Nodal description 17
Table B-5 Pressurizer Compartment Vent Path Description 21
Table B-6 Mass and Release Rates for Pressurizer Compartment Peak Pressure Analyses 25
Table B-7 Pressurizer compartment Nodal Description (nodalization sensitivity study). 33
Table B-8 Pressurizer compartment Vent path description (nodalization sensitivity study) 34
Table B-9 Pressurizer compartment Nodal Description (nodalization sensitivity study).. 35
Table B-10 Pressurizer compartment Vent Path Description (nodalization sensitivity study) 36

List of Figures

Figure B-1 Nodalization scheme for pressurizer compartment analysis(1/3) 37
Figure B-2 Nodalization scheme for pressurizer compartment analysis (2/3) 38
Figure B-3 Nodalization scheme for pressurizer compartment analysis (2/3) 39
Figure B-4 Nodalization Diagram for Pressurizer Compartment Analysis 40
Figure B-5 Nodalization scheme for pressurizer compartment sensitivity analysis about nodalization 41
Figure B-6 Nodalization scheme for pressurizer compartment sensitivity analysis about nodalization 42
Figure B-7 Nodalization Diagram for pressurizer compartment sensitivity analysis 43
Figure B-8 Short term mass and energy release data for pressurizer compartment Pressurizer spray line break (B Loop cold leg side) (1/2) 44
Figure B-9 Short term mass and energy release data for pressurizer compartment Pressurizer spray line break (B Loop cold leg side) (2/2) 44
Figure B-10 Short term mass and energy release data for pressurizer compartment Pressurizer spray line break (C Loop cold leg side) (1/2) 45
Figure B-11 Short term mass and energy release data for pressurizer compartment Pressurizer spray line break (C Loop cold leg side) (2/2) 45
Figure B-12 Short term mass and energy release data for pressurizer compartment Pressurizer spray line break (pressurizer side) (1/2) 46
Figure B-13 Short term mass and energy release data for pressurizer compartment Pressurizer spray line break (pressurizer side) (2/2) 46
Figure B-14 Pressure transient at the peak pressure node (V27) in pressurizer compartment (Pressurizer spray line break) 47
Figure B-15 Short term mass and energy release data for pressurizer compartment Pressurizer relief line break (1/2) 47
Figure B-16 Short term mass and energy release data for pressurizer compartment Pressurizer relief line break (2/2) 48
Figure B-17 Pressure transient at the peak pressure node (V39) in pressurizer compartment (Pressurizer relief line break) 48
Figure B-18 Result of Nodalization Sensitivity Analysis 49
Figure B-19 Result of Nodalization Sensitivity Analysis 50

Table B-1 Pressurizer compartment Nodal Description

A. Break Type : Pressurizer spray line(6B) guillotine break
Break Area : 0.1467(ft^2)
Break location : Volume number 27

Volume No.	Description	Height (ft)	Free Volume (ft^3)	Initial Conditions			Calculated Peak Press. Diff. (psid)	Design Peak Press. Diff (psid)	Margin (%)
				Temp. (deg F)	Press. (psia)	Humid. (%)			
1	Bottom of pressurizer compartment; EL=58"-5'	7.66	388	120	14.396	0	11.02	14	27.0
2	Bottom of pressurizer compartment; EL=58"-5'	7.66	346	120	14.396	0	11.02	14	27.0
3	Bottom of pressurizer compartment; EL=58"-5'	7.66	412	120	14.396	0	11.02	14	27.0
4	Bottom of pressurizer compartment; EL=58"-5'	7.66	433	120	14.396	0	11.02	14	27.0
5	EL=66"-1'	10.00	513	120	14.396	0	11.01	14	27.2
6	EL=66"-1'	10.00	504	120	14.396	0	11.02	14	27.0
7	EL=66"-1'	10.00	568	120	14.396	0	11.02	14	27.0
8	EL=66"-1'	10.00	559	120	14.396	0	11.01	14	27.2
9	EL=76"-1' (grating floor)	6.84	351	120	14.396	0	11.00	14	27.3
10	EL=76"-1' (grating floor)	6.84	343	120	14.396	0	11.01	14	27.2
11	EL=76"-1' (grating floor)	6.84	398	120	14.396	0	11.01	14	27.2
12	EL=76"-1' (grating floor)	6.84	408	120	14.396	0	11.00	14	27.3
13	EL=82"-11'	6.83	351	120	14.396	0	10.99	14	27.4
14	EL=82"-11'	6.83	351	120	14.396	0	11.00	14	27.3
15	EL=82"-11'	6.83	368	120	14.396	0	11.00	14	27.3
16	EL=82"-11'	6.83	403	120	14.396	0	10.99	14	27.4
17	EL=89"-9' (grating floor)	6.83	351	120	14.396	0	10.97	14	27.6
18	EL=89"-9' (grating floor)	6.83	351	120	14.396	0	11.00	14	27.3
19	EL=89"-9' (grating floor)	6.83	378	120	14.396	0	11.02	14	27.0
20	EL=89"-9' (grating floor)	6.83	417	120	14.396	0	10.97	14	27.6

Table B-1 Pressurizer compartment Nodal Description

A. Break Type : Pressurizer spray line(6B) guillotine break
Break Area : 0.1467(ft^2)
Break location : Volume number 27

Volume No.	Description	Height (ft)	Free Volume (ft^3)	Initial Conditions			Calculated Peak Press. Diff. (psid)	Design Peak Press. Diff (psid)	Margin (%)
				Temp. (deg F)	Press. (psia)	Humid. (%)			
21	EL=96"-7'	6.84	351	120	14.396	0	10.97	14	27.6
22	EL=96"-7'	6.84	351	120	14.396	0	10.99	14	27.4
23	EL=96"-7'	6.84	371	120	14.396	0	11.01	14	27.2
24	EL=96"-7'	6.84	392	120	14.396	0	10.97	14	27.6
25	EL=103"-5' (grating floor)	8.91	453	120	14.396	0	10.91	14	28.3
26	EL=103"-5' (grating floor)	8.91	452	120	14.396	0	10.98	14	27.5
27	EL=103"-5' (grating floor)	8.91	517	120	14.396	0	11.19	14	25.1
28	EL=103"-5' (grating floor)	8.91	506	120	14.396	0	10.91	14	28.3
29	EL=112"-4'	4.34	218	120	14.396	0	10.84	14	29.2
30	EL=112"-4'	4.34	188	120	14.396	0	10.88	14	28.7
31	EL=112"-4'	4.34	214	120	14.396	0	10.92	14	28.2
32	EL=112"-4'	4.34	241	120	14.396	0	10.84	14	29.2
33	EL=116"-8' (grating floor)	5.8	376	120	14.396	0	10.74	14	30.4
34	EL=116"-8' (grating floor)	5.8	353	120	14.396	0	10.75	14	30.2
35	EL=116"-8' (grating floor)	5.8	437	120	14.396	0	10.75	14	30.2
36	EL=116"-8' (grating floor)	5.8	452	120	14.396	0	10.74	14	30.4
37	Top of Pressurizer; EL=122"-5.6'	5.36	462	120	14.396	0	10.67	14	31.2
38	Top of Pressurizer; EL=122"-5.6'	5.36	458	120	14.396	0	10.67	14	31.2
39	Top of Pressurizer; EL=122"-5.6'	5.36	494	120	14.396	0	10.67	14	31.2
40	Top of Pressurizer; EL=122"-5.6'	5.36	509	120	14.396	0	10.67	14	31.2

Table B-1 Pressurizer compartment Nodal Description

A. Break Type : Pressurizer spray line(6B) guillotine break
Break Area : 0.1467(ft^2)
Break location : Volume number 27

Volume No.	Description	Height (ft)	Free Volume (ft^3)	Initial Conditions			Calculated Peak Press. Diff. (psid)	Design Peak Press. Diff (psid)	Margin (%)
				Temp. (deg F)	Press. (psia)	Humid. (%)			
41	Top of Pressurizer compartment; EL=127"-10' (grating floor)	9.84	817	120	14.396	0	10.59	14	32.2
42	Top of Pressurizer compartment; EL=127"-10' (grating floor)	9.84	809	120	14.396	0	10.59	14	32.2
43	Top of Pressurizer compartment; EL=127"-10' (grating floor)	9.84	860	120	14.396	0	10.56	14	32.6
44	Top of Pressurizer compartment; EL=127"-10' (grating floor)	9.84	868	120	14.396	0	10.54	14	32.8
45	Containment atmosphere	200	2741212	120	14.396	0	–	–	–

Table B-2 Pressurizer Compartment Vent Path Description

A. Break Type : Pressurizer Spray line(6B)
Break Area : 0.1467(ft^2)
Break location : Volume number 27

Vent Path No.	Volume No.		Description of Vent Path Flow		Area (ft^2)	Inertia Length (ft)	Hydraulic Diameter (ft)	Friction Length (ft)	Loss Coefficient K			
	From	To	Choked	Unchoked					Turning and Obstruction	Expansion	Contraction	Total
1	V1	V2		X	15.94	13.34	3.25	16.01	0.0	1.0	0.5	1.50
2	V1	V4		X	44.55	9.52	6.27	11.42	0.0	1.0	0.5	1.50
3	V2	V3		X	20.21	9.55	2.98	11.46	0.0	1.0	0.5	1.50
4	V3	V4		X	19.13	14.90	3.75	17.88	0.0	1.0	0.5	1.50
5	V4	V45		X	10.75	7.57	3.26	9.08	0.17	1.0	0.5	1.67
6	V1	V5		X	60.54	8.83	7.38	10.60	0.0	0.0	0.0	0.00
7	V2	V6		X	60.68	8.83	7.70	10.60	0.0	0.0	0.0	0.00
8	V3	V7		X	69.31	8.83	7.30	10.60	0.0	0.0	0.0	0.00
9	V4	V8		X	66.47	8.83	6.05	10.60	0.0	0.0	0.0	0.00
10	V5	V6		X	21.28	13.34	3.51	16.01	0.0	1.0	0.5	1.50
11	V5	V8		X	58.78	9.52	7.40	11.42	0.0	1.0	0.5	1.50
12	V6	V7		X	57.68	9.52	6.50	11.42	0.0	1.0	0.5	1.50
13	V7	V8		X	22.61	14.90	2.91	17.88	0.0	1.0	0.5	1.50
14	V5	V9		X	36.41	5.09	7.70	20.84	0.7	0.0	0.0	0.70
15	V6	V10		X	35.75	5.09	6.76	19.51	0.7	0.0	0.0	0.70
16	V7	V11		X	40.54	5.09	6.72	19.46	0.7	0.0	0.0	0.70
17	V8	V12		X	41.38	5.09	6.89	19.70	0.7	0.0	0.0	0.70
18	V9	V10		X	14.54	13.34	3.25	16.01	0.0	1.0	0.5	1.50
19	V9	V12		X	40.17	9.52	6.32	11.42	0.0	1.0	0.5	1.50
20	V10	V11		X	40.17	9.52	6.32	11.42	0.0	1.0	0.5	1.50
21	V11	V12		X	17.39	14.90	3.71	17.88	0.0	1.0	0.5	1.50
22	V9	V13		X	60.68	6.84	7.70	8.21	0.0	0.0	0.0	0.00

Table B-2 Pressurizer Compartment Vent Path Description

A. Break Type : Pressurizer Spray line(6B)
Break Area : 0.1467(ft^2)
Break location : Volume number 27

Vent Path No.	Volume No.		Description of Vent Path Flow		Area (ft^2)	Inertia Length (ft)	Hydraulic Diameter (ft)	Friction Length (ft)	Loss Coefficient K			
	From	To	Choked	Unchoked					Turning and Obstruction	Expansion	Contraction	Total
23	V10	V14		X	59.58	6.84	6.76	8.21	0.0	0.0	0.0	0.00
24	V11	V15		X	67.57	6.84	6.72	8.21	0.0	0.0	0.0	0.00
25	V12	V16		X	68.97	6.84	6.89	8.21	0.0	0.0	0.0	0.00
26	V13	V14		X	14.54	13.34	3.25	16.01	0.0	1.0	0.5	1.50
27	V13	V16		X	40.17	9.52	6.32	11.42	0.0	1.0	0.5	1.50
28	V14	V15		X	39.07	9.52	5.36	11.42	0.0	1.0	0.5	1.50
29	V15	V16		X	15.95	14.90	2.60	17.88	0.0	1.0	0.5	1.50
30	V13	V17		X	36.41	4.15	7.70	18.94	0.7	0.0	0.0	0.70
31	V14	V18		X	36.41	4.15	7.70	18.94	0.7	0.0	0.0	0.70
32	V15	V19		X	39.02	4.15	5.23	15.46	0.7	0.0	0.0	0.70
33	V16	V20		X	42.25	4.15	8.23	19.69	0.7	0.0	0.0	0.70
34	V17	V18		X	14.54	13.34	3.25	16.01	0.0	1.0	0.5	1.50
35	V17	V20		X	40.17	9.52	6.32	11.42	0.0	1.0	0.5	1.50
36	V18	V19		X	40.17	9.52	6.32	11.42	0.0	1.0	0.5	1.50
37	V19	V20		X	17.39	14.90	3.71	17.88	0.0	1.0	0.5	1.50
38	V17	V21		X	60.68	6.84	7.70	8.21	0.0	0.0	0.0	0.00
39	V18	V22		X	60.68	6.84	7.70	8.21	0.0	0.0	0.0	0.00
40	V19	V23		X	62.66	6.84	4.66	8.21	0.0	0.0	0.0	0.00
41	V20	V24		X	70.41	6.84	8.23	8.21	0.0	0.0	0.0	0.00
42	V21	V22		X	14.54	13.34	3.25	16.01	0.0	1.0	0.5	1.50
43	V21	V24		X	40.17	9.52	6.32	11.42	0.0	1.0	0.5	1.50
44	V22	V23		X	40.17	9.52	6.32	11.42	0.0	1.0	0.5	1.50
45	V23	V24		X	14.55	14.90	2.35	17.88	0.0	1.0	0.5	1.50
46	V21	V25		X	36.41	4.77	7.70	20.19	0.7	0.0	0.0	0.70

Table B-2 Pressurizer Compartment Vent Path Description

A. Break Type : Pressurizer Spray line(6B)
Break Area : 0.1467(ft^2)
Break location : Volume number 27

Vent Path No.	Volume No.		Description of Vent Path Flow		Area (ft^2)	Inertia Length (ft)	Hydraulic Diameter (ft)	Friction Length (ft)	Loss Coefficient K			
	From	To	Choked	Unchoked					Turning and Obstruction	Expansion	Contraction	Total
47	V22	V26		X	36.41	4.77	7.70	20.19	0.7	0.0	0.0	0.70
48	V23	V27		X	40.72	4.77	6.20	18.07	0.7	0.0	0.0	0.70
49	V24	V28		X	40.54	4.77	6.72	18.81	0.7	0.0	0.0	0.70
50	V25	V26		X	18.91	13.34	3.12	16.01	0.0	1.0	0.5	1.50
51	V25	V28		X	52.41	9.52	5.37	11.42	0.0	1.0	0.5	1.50
52	V26	V27		X	52.34	9.52	5.33	11.42	0.0	1.0	0.5	1.50
53	V27	V28		X	22.62	14.90	3.49	17.88	0.0	1.0	0.5	1.50
54	V25	V29		X	59.77	6.63	6.68	7.96	0.0	1.0	0.0	1.00
55	V26	V30		X	54.42	6.63	3.60	7.96	0.0	1.0	0.0	1.00
56	V27	V31		X	61.81	6.63	3.38	7.96	0.0	1.0	0.0	1.00
57	V28	V32		X	64.65	6.63	5.11	7.96	0.0	1.0	0.0	1.00
58	V29	V30		X	5.86	13.34	1.25	16.01	0.0	1.0	0.5	1.50
59	V29	V32		X	25.47	9.52	4.99	11.42	0.0	1.0	0.5	1.50
60	V30	V31		X	21.58	9.52	2.86	11.42	0.0	1.0	0.5	1.50
61	V31	V32		X	8.13	14.90	1.63	17.88	0.0	1.0	0.5	1.50
62	V29	V33		X	45.74	3.08	7.62	16.70	0.7	0.0	0.0	0.70
63	V30	V34		X	45.07	3.08	6.70	15.41	0.7	0.0	0.0	0.70
64	V31	V35		X	52.21	3.08	7.12	16.00	0.7	0.0	0.0	0.70
65	V32	V36		X	52.74	3.08	8.21	17.54	0.7	0.0	0.0	0.70
66	V33	V34		X	14.80	14.00	2.51	16.80	0.0	1.0	0.5	1.50
67	V33	V36		X	39.89	10.50	6.29	12.60	0.0	1.0	0.5	1.50
68	V34	V35		X	39.89	10.50	6.29	12.60	0.0	1.0	0.5	1.50
69	V35	V36		X	20.56	15.84	4.40	19.01	0.0	1.0	0.5	1.50
70	V33	V37		X	74.83	5.58	7.30	6.70	0.0	1.0	0.0	1.00

Table B-2 Pressurizer Compartment Vent Path Description

A. Break Type : Pressurizer Spray line(6B)
Break Area : 0.1467(ft^2)
Break location : Volume number 27

Vent Path No.	Volume No.		Description of Vent Path Flow		Area (ft^2)	Inertia Length (ft)	Hydraulic Diameter (ft)	Friction Length (ft)	Loss Coefficient K			
	From	To	Choked	Unchoked					Turning and Obstruction	Expansion	Contraction	Total
71	V34	V38		X	72.30	5.58	6.29	6.70	0.0	1.0	0.0	1.00
72	V35	V39		X	85.94	5.58	7.19	6.70	0.0	1.0	0.0	1.00
73	V36	V40		X	86.60	5.58	7.39	6.70	0.0	1.0	0.0	1.00
74	V37	V38		X	38.77	9.60	4.55	11.52	0.0	1.0	0.5	1.50
75	V37	V40		X	61.30	7.63	7.22	9.16	0.0	1.0	0.5	1.50
76	V38	V39		X	61.03	7.63	6.82	9.16	0.0	1.0	0.5	1.50
77	V39	V40		X	35.21	11.76	3.56	14.11	0.0	1.0	0.5	1.50
78	V37	V41		X	51.94	4.60	9.22	22.00	0.7	0.0	0.0	0.70
79	V38	V42		X	51.77	4.60	8.76	21.35	0.7	0.0	0.0	0.70
80	V39	V43		X	58.56	4.60	8.89	21.53	0.7	0.0	0.0	0.70
81	V40	V44		X	58.56	4.60	8.89	21.53	0.7	0.0	0.0	0.70
82	V41	V42		X	58.26	9.60	3.81	11.52	0.0	1.0	0.5	1.50
83	V41	V44		X	100.97	7.63	8.32	9.16	0.0	1.0	0.5	1.50
84	V42	V43		X	100.19	7.63	7.76	9.16	0.0	1.0	0.5	1.50
85	V43	V44		X	58.79	11.76	4.66	14.11	0.0	1.0	0.5	1.50
86	V43	V45	X		20.75	9.00	4.19	10.80	0.84	1.0	0.5	2.34
87	V44	V45	X		32.78	9.03	4.98	10.84	0.84	1.0	0.5	2.34
88	V4	V45		X	9.00	7.57	3.00	9.08	0.17	1.0	0.5	1.67

Table B-3 Mass and Release Rates for Pressurizer Compartment Peak Pressure Analyses

A. Break Type : Pressurizer Spray line(6B) guillotine break
Break Area : 0.1467(ft^2)

Time (s)	B Loop CLG side		C Loop CLG side		PZR side	
	Mass Release Rate (lbm/s)	Enthalpy (BTU/lbm)	Mass Release Rate (lbm/s)	Enthalpy (BTU/lbm)	Mass Release Rate (lbm/s)	Enthalpy (BTU/lbm)
0	0	548.699	0	548.698	0	548.697
0.001	1333.33	548.699	1333.36	548.698	1333.71	548.697
0.002	1051.83	549.91	1052.59	549.907	1053.1	549.906
0.003	976.336	546.15	976.964	546.156	978.905	546.167
0.004	911.443	546.41	910.784	546.405	914.545	546.411
0.005	874.957	547.038	872.234	547.011	877.481	547.035
0.006	880.8	547.808	877.733	547.765	872.981	547.788
0.007	903.186	548.471	902.715	548.426	898.807	548.443
0.008	907.568	548.972	909.971	548.927	904.669	548.948
0.009	884.3	549.348	888.933	549.305	882.261	549.313
0.01	856.156	549.745	862.952	549.749	867.653	549.605
0.011	844.181	547.825	837.91	548.052	838.218	548.06
0.012	813.174	546.016	817.989	546.179	818.818	546.105
0.013	811.577	545.219	811.237	545.275	816.636	545.258
0.014	812.461	545.006	808.227	544.988	814.508	544.998
0.015	827.95	545.161	822.686	545.086	829.41	545.134
0.016	843.444	545.499	839.098	545.4	845.181	545.459
0.017	852.838	545.88	850.655	545.769	855.358	545.833
0.018	854.833	546.258	855.413	546.14	861.636	546.201
0.019	850.255	546.611	853.74	546.491	871.056	546.522
0.02	840.6	546.932	846.771	546.81	887.079	546.769
0.021	827.481	547.217	835.831	547.097	908.58	546.934
0.022	812.527	547.44	822.265	547.344	932.568	547.023
0.023	811.341	548.232	807.543	547.532	956.196	547.057
0.024	800.57	547.691	803.035	548.222	977.5	547.051

Table B-3 Mass and Release Rates for Pressurizer Compartment Peak Pressure Analyses

A. Break Type : Pressurizer Spray line(6B) guillotine break
Break Area : 0.1467(ft^2)

Time (s)	B Loop CLG side		C Loop CLG side		PZR side	
	Mass Release Rate (lbm/s)	Enthalpy (BTU/lbm)	Mass Release Rate (lbm/s)	Enthalpy (BTU/lbm)	Mass Release Rate (lbm/s)	Enthalpy (BTU/lbm)
0.025	788.704	548.245	792.883	547.734	995.422	547.021
0.026	779.017	547.866	782.084	548.222	1009.88	546.979
0.027	774.115	548.311	774.446	547.875	1021.29	546.931
0.028	764.21	548.18	770.373	548.263	1030.34	546.882
0.029	769.558	547.905	775.971	547.873	1037.94	546.836
0.03	765.068	547.377	766.373	547.68	1044.98	546.792
0.031	765.602	546.582	763.097	546.994	1052.2	546.75
0.032	771.118	545.836	765.318	546.224	1060.13	546.709
0.033	780.391	545.256	772.233	545.564	1069.12	546.672
0.034	791.41	544.897	782.236	545.081	1079.39	546.636
0.035	802.025	544.692	793.361	544.796	1091.91	546.703
0.036	810.563	544.613	803.741	544.643	1106.46	547.261
0.037	816.008	544.63	811.999	544.599	1119.55	547.86
0.038	818.004	544.717	817.331	544.636	1131.88	548.217
0.039	816.716	544.85	819.471	544.732	1145.89	548.28
0.04	812.632	545.013	818.569	544.867	1163.51	548.113
0.041	806.391	545.192	815.033	545.027	1185.69	547.815
0.042	798.662	545.379	809.395	545.2	1213.39	547.467
0.043	790.064	545.567	802.218	545.379	1249.74	547.121
0.044	781.137	545.75	794.032	545.559	1295.43	546.81
0.045	772.372	545.898	785.309	545.735	1347.11	546.564
0.046	764.111	546.052	776.456	545.886	1400.29	546.399
0.047	756.527	546.202	767.872	546.028	1451.56	546.318
0.048	754.535	547.212	759.724	546.17	1499.13	546.316
0.049	757.087	545.955	760.4	547.474	1542.67	546.378
0.05	747.05	546.277	761.338	545.858	1583.89	546.49

Table B-3 Mass and Release Rates for Pressurizer Compartment Peak Pressure Analyses

A. Break Type : Pressurizer Spray line(6B) guillotine break
Break Area : 0.1467(ft^2)

Time (s)	B Loop CLG side		C Loop CLG side		PZR side	
	Mass Release Rate (lbm/s)	Enthalpy (BTU/lbm)	Mass Release Rate (lbm/s)	Enthalpy (BTU/lbm)	Mass Release Rate (lbm/s)	Enthalpy (BTU/lbm)
0.6	741.777	546.492	747.953	546.204	1625.3	546.641
0.7	745.321	547.633	740.711	546.438	1668.82	546.823
0.8	738.471	547.224	739.861	547.328	1715.74	547.032
0.9	737.473	547.03	734.328	547.054	1765.89	547.266
1	738.115	546.943	742.657	546.195	1819.16	547.526
1.1	739.04	546.909	736.011	546.508	1876.56	547.814
1.2	740.11	546.899	733.19	546.693	1940.57	548.133
1.3	741.467	546.899	732.25	546.804	2010.35	548.487
1.4	743.172	546.901	732.39	546.871	2079.84	548.875
1.5	745.177	546.9	733.292	546.911	2143.54	549.295
1.6	747.351	546.897	734.786	546.932	2200.56	549.75
1.7	749.55	546.89	736.733	546.941	2254.74	550.246
1.8	751.647	546.878	738.998	546.94	2301.05	550.774
1.9	753.213	546.817	741.457	546.932	2331.58	551.323
2	753.838	546.661	744.003	546.918	2349.99	551.902
2.1	753.803	546.424	746.547	546.899	2361.55	552.519
2.2	753.683	546.14	748.772	546.85	2368.43	553.179
2.3	753.961	545.839	750.207	546.726	2372.72	553.89
2.4	754.87	545.547	751.031	546.506	2376.42	554.659
2.5	756.386	545.281	751.761	546.229	2380.27	555.495
2.6	758.316	545.08	752.856	545.927	2414.13	556.485
2.7	760.39	544.904	754.566	545.628	2414.91	557.483
2.8	762.373	544.76	756.906	545.351	2416.56	558.618
2.9	764.026	544.651	759.726	545.105	2405.24	559.83
3	765.167	544.576	762.797	544.898	2388.66	561.132
3.1	765.684	544.531	765.876	544.729	2368.4	562.515

Table B-3 Mass and Release Rates for Pressurizer Compartment Peak Pressure Analyses

A. Break Type : Pressurizer Spray line(6B) guillotine break
Break Area : 0.1467(ft^2)

Time (s)	B Loop CLG side		C Loop CLG side		PZR side	
	Mass Release Rate (lbm/s)	Enthalpy (BTU/lbm)	Mass Release Rate (lbm/s)	Enthalpy (BTU/lbm)	Mass Release Rate (lbm/s)	Enthalpy (BTU/lbm)
3.2	765.542	544.515	768.766	544.599	2345.49	563.978
3.3	764.77	544.522	771.332	544.506	2320.92	565.531
3.4	763.443	544.549	773.542	544.445	2295.41	567.184
3.5	761.672	544.592	775.431	544.414	2269.1	568.941
3.6	759.589	544.649	777.088	544.408	2241.98	570.808
3.7	757.34	544.716	778.638	544.423	2214.44	572.795
3.8	755.065	544.774	780.205	544.456	2186.14	574.9
3.9	752.939	544.835	781.912	544.503	2155.59	577.102
4	751.043	544.91	783.861	544.561	2122.46	579.388
4.1	749.466	544.992	786.132	544.627	2088.69	581.772
4.2	748.316	545.078	788.779	544.699	2056.23	584.283
4.3	747.682	545.164	791.838	544.774	2024.21	586.903
4.4	747.628	545.248	795.314	544.85	1989.7	589.522
4.5	748.197	545.33	799.2	544.926	1958.71	592.224
4.6	749.413	545.407	803.474	545.002	1929.27	594.887
4.7	751.279	545.48	808.11	545.074	1905.91	597.475
4.8	753.792	545.547	813.047	545.144	1883.29	599.671
4.9	756.938	545.622	818.239	545.21	1875.48	602.658
5	760.692	545.69	823.641	545.272	1837.96	606.362
5.1	765.043	545.745	829.195	545.33	1782.64	610.349
5.2	769.956	545.788	834.849	545.383	1727.56	614.547
5.3	775.353	545.824	840.539	545.431	1700.97	618.886
5.4	781.172	545.851	846.222	545.475	1692.36	623.537
5.5	787.357	545.872	851.854	545.515	1678.65	628.709
5.6	793.843	545.887	857.392	545.55	1660.5	634.294
5.7	800.556	545.897	862.802	545.583	1633.44	640.204

Table B-3 Mass and Release Rates for Pressurizer Compartment Peak Pressure Analyses

A. Break Type : Pressurizer Spray line(6B) guillotine break
Break Area : 0.1467(ft^2)

Time (s)	B Loop CLG side		C Loop CLG side		PZR side	
	Mass Release Rate (lbm/s)	Enthalpy (BTU/lbm)	Mass Release Rate (lbm/s)	Enthalpy (BTU/lbm)	Mass Release Rate (lbm/s)	Enthalpy (BTU/lbm)
5.8	807.448	545.901	868.04	545.612	1599.09	646.311
5.9	814.458	545.901	873.074	545.638	1561.9	652.923
6	821.531	545.898	877.887	545.661	1521.21	660.079
6.1	828.605	545.892	882.458	545.682	1477.3	667.6
6.2	835.632	545.883	886.766	545.7	1433.07	675.444
6.3	842.556	545.872	890.806	545.717	1389.98	683.595
6.4	849.34	545.859	894.563	545.732	1348.23	692.035
6.5	855.938	545.845	898.093	545.752	1307.7	700.764
6.6	862.31	545.831	901.472	545.785	1268.36	709.78
6.7	868.434	545.817	904.715	545.838	1230.16	719.069
6.8	874.274	545.802	907.77	545.913	1192.8	728.596
6.9	879.821	545.789	910.529	546.008	1156.38	738.338
7	885.039	545.776	912.872	546.121	1121	748.238
7.1	889.923	545.764	914.704	546.244	1087.32	758.366
7.2	894.457	545.752	915.968	546.373	1055.41	768.847
7.3	898.634	545.742	916.653	546.501	1023.65	779.633
7.4	902.449	545.733	916.79	546.623	991.554	790.565
7.5	905.905	545.725	916.44	546.736	960.132	801.707
7.6	909.003	545.718	915.685	546.836	929.287	812.907
7.7	911.75	545.713	914.617	546.922	929.544	825.95
7.8	914.151	545.709	913.33	546.992	879.38	835.833
7.9	916.215	545.706	911.907	547.047	855.167	846.493
8	917.954	545.705	910.422	547.086	844.914	855.772
8.1	919.379	545.704	908.938	547.111	816.343	868.236
8.2	920.505	545.705	907.501	547.123	793.486	879.685
8.3	921.346	545.706	906.144	547.124	780.048	893.568

Table B-3 Mass and Release Rates for Pressurizer Compartment Peak Pressure Analyses

A. Break Type : Pressurizer Spray line(6B) guillotine break
Break Area : 0.1467(ft^2)

Time (s)	B Loop CLG side		C Loop CLG side		PZR side	
	Mass Release Rate (lbm/s)	Enthalpy (BTU/lbm)	Mass Release Rate (lbm/s)	Enthalpy (BTU/lbm)	Mass Release Rate (lbm/s)	Enthalpy (BTU/lbm)
8.4	921.917	545.709	904.886	547.115	764.147	902.711
8.5	922.233	545.713	903.738	547.097	747.497	912.461
8.6	922.311	545.718	902.698	547.072	731.818	922.402
8.7	922.168	545.723	901.763	547.041	716.732	932.258
8.8	921.821	545.729	900.919	547.007	711.362	939.531
8.9	921.287	545.736	900.156	546.969	694.087	951.003
9	920.581	545.744	899.457	546.929	680.74	960.752
9.1	919.722	545.752	898.807	546.888	669.435	969.767
9.2	918.723	545.761	898.194	546.846	659.124	978.308
9.3	917.603	545.771	897.605	546.805	649.746	986.474
9.4	916.376	545.78	897.031	546.764	641.307	994.291
9.5	915.057	545.791	896.464	546.724	633.677	1001.76
9.6	913.661	545.801	895.9	546.686	626.716	1008.87
9.7	912.2	545.812	895.339	546.649	620.298	1015.61
9.8	910.688	545.823	894.783	546.614	614.543	1022
9.9	909.137	545.834	894.236	546.581	609.352	1028.03
10	907.558	545.846	893.705	546.55	604.577	1033.71

Table B-4 Pressurizer compartment Nodal description

B. Break Type : Pressurizer relief line(8B) guillotine break
Break Area : 0.2532(ft^2)
Break location : Volume number 39

Volume No.	Description	Height (ft)	Free Volume (ft^3)	Initial Conditions			Calculated Peak Press. Diff. (psid)	Design Peak Press. Diff (psid)	Margin (%)
				Temp. (deg F)	Press. (psia)	Humid. (%)			
1	Bottom of pressurizer compartment; EL=58"-5'	7.66	388	120	14.396	0	5.20	14	169.2
2	Bottom of pressurizer compartment; EL=58"-5'	7.66	346	120	14.396	0	5.27	14	165.7
3	Bottom of pressurizer compartment; EL=58"-5'	7.66	412	120	14.396	0	5.45	14	156.9
4	Bottom of pressurizer compartment; EL=58"-5'	7.66	433	120	14.396	0	5.19	14	169.7
5	EL=66"-1'	10.00	513	120	14.396	0	5.18	14	170.3
6	EL=66"-1'	10.00	504	120	14.396	0	5.22	14	168.2
7	EL=66"-1'	10.00	568	120	14.396	0	5.22	14	168.2
8	EL=66"-1'	10.00	559	120	14.396	0	5.16	14	171.3
9	EL=76"-1' (grating floor)	6.84	351	120	14.396	0	5.12	14	173.4
10	EL=76"-1' (grating floor)	6.84	343	120	14.396	0	5.14	14	172.4
11	EL=76"-1' (grating floor)	6.84	398	120	14.396	0	5.14	14	172.4
12	EL=76"-1' (grating floor)	6.84	408	120	14.396	0	5.10	14	174.5

Table B-4 Pressurizer compartment Nodal description

B. Break Type : Pressurizer relief line(8B) guillotine break
Break Area : 0.2532(ft^2)
Break location : Volume number 39

Volume No.	Description	Height (ft)	Free Volume (ft^3)	Initial Conditions			Calculated Peak Press. Diff. (psid)	Design Peak Press. Diff (psid)	Margin (%)
				Temp. (deg F)	Press. (psia)	Humid. (%)			
13	EL=82"-11'	6.83	351	120	14.396	0	5.04	14	177.8
14	EL=82"-11'	6.83	351	120	14.396	0	5.06	14	176.7
15	EL=82"-11'	6.83	368	120	14.396	0	5.05	14	177.2
16	EL=82"-11'	6.83	403	120	14.396	0	5.03	14	178.3
17	EL=89"-9' (grating floor)	6.83	351	120	14.396	0	4.92	14	184.6
18	EL=89"-9' (grating floor)	6.83	351	120	14.396	0	4.94	14	183.4
19	EL=89"-9' (grating floor)	6.83	378	120	14.396	0	4.93	14	184.0
20	EL=89"-9' (grating floor)	6.83	417	120	14.396	0	4.92	14	184.6
21	EL=96"-7'	6.84	351	120	14.396	0	4.80	14	191.7
22	EL=96"-7'	6.84	351	120	14.396	0	4.80	14	191.7
23	EL=96"-7'	6.84	371	120	14.396	0	4.80	14	191.7
24	EL=96"-7'	6.84	392	120	14.396	0	4.81	14	191.1
25	EL=103"-5' (grating floor)	8.91	453	120	14.396	0	4.82	14	190.5
26	EL=103"-5' (grating floor)	8.91	452	120	14.396	0	4.88	14	186.9
27	EL=103"-5' (grating floor)	8.91	517	120	14.396	0	4.88	14	186.9
28	EL=103"-5' (grating floor)	8.91	506	120	14.396	0	4.82	14	190.5

Table B-4 Pressurizer compartment Nodal description

B. Break Type : Pressurizer relief line(8B) guillotine break
Break Area : 0.2532(ft^2)
Break location : Volume number 39

Volume No.	Description	Height (ft)	Free Volume (ft^3)	Initial Conditions			Calculated Peak Press. Diff. (psid)	Design Peak Press. Diff (psid)	Margin (%)
				Temp. (deg F)	Press. (psia)	Humid. (%)			
29	EL=112"-4'	4.34	218	120	14.396	0	4.88	14	186.9
30	EL=112"-4'	4.34	188	120	14.396	0	4.92	14	184.6
31	EL=112"-4'	4.34	214	120	14.396	0	4.94	14	183.4
32	EL=112"-4'	4.34	241	120	14.396	0	4.89	14	186.3
33	EL=116"-8' (grating floor)	5.8	376	120	14.396	0	4.90	14	185.7
34	EL=116"-8' (grating floor)	5.8	353	120	14.396	0	4.94	14	183.4
35	EL=116"-8' (grating floor)	5.8	437	120	14.396	0	4.97	14	181.7
36	EL=116"-8' (grating floor)	5.8	452	120	14.396	0	4.90	14	185.7
37	Top of Pressurizer; EL=122"-5.6'	5.36	462	120	14.396	0	4.91	14	185.1
38	Top of Pressurizer; EL=122"-5.6'	5.36	458	120	14.396	0	4.93	14	184.0
39	Top of Pressurizer; EL=122"-5.6'	5.36	494	120	14.396	0	5.67	14	146.9
40	Top of Pressurizer; EL=122"-5.6'	5.36	509	120	14.396	0	4.91	14	185.1
41	Top of Pressurizer compartment; EL=127"-10' (grating floor)	9.84	817	120	14.396	0	4.89	14	186.3
42	Top of Pressurizer compartment; EL=127"-10' (grating floor)	9.84	809	120	14.396	0	4.89	14	186.3

Table B-4 Pressurizer compartment Nodal description

B. Break Type : Pressurizer relief line(8B) guillotine break
Break Area : 0.2532(ft^2)
Break location : Volume number 39

Volume No.	Description	Height (ft)	Free Volume (ft^3)	Initial Conditions			Calculated Peak Press. Diff. (psid)	Design Peak Press. Diff (psid)	Margin (%)
				Temp. (deg F)	Press. (psia)	Humid. (%)			
43	Top of Pressurizer compartment; EL=127"-10' (grating floor)	9.84	860	120	14.396	0	4.87	14	187.5
44	Top of Pressurizer compartment; EL=127"-10' (grating floor)	9.84	868	120	14.396	0	4.85	14	188.7
45	Containment atmosphere	200	2741212	120	14.396	0	–	–	–

Table B-5 Pressurizer Compartment Vent Path Description

B. Break Type : Pressurizer relief line(6B) guillotine break
Break Area : 0.2532(ft^2)
Break location : Volume number 39

Vent Path No.	Volume No.		Description of Vent Path Flow		Area (ft^2)	Inertia Length (ft)	Hydraulic Diameter (ft)	Friction Length (ft)	Loss Coefficient K			
	From	To	Choked	Unchoked					Turning and Obstruction	Expansion	Contraction	Total
1	V1	V2		X	15.94	13.34	3.25	16.01	0.0	1.0	0.5	1.50
2	V1	V4		X	44.55	9.52	6.27	11.42	0.0	1.0	0.5	1.50
3	V2	V3		X	20.21	9.55	2.98	11.46	0.0	1.0	0.5	1.50
4	V3	V4		X	19.13	14.90	3.75	17.88	0.0	1.0	0.5	1.50
5	V4	V45		X	10.75	7.57	3.26	9.08	0.17	1.0	0.5	1.67
6	V1	V5		X	60.54	8.83	7.38	10.60	0.0	0.0	0.0	0.00
7	V2	V6		X	60.68	8.83	7.70	10.60	0.0	0.0	0.0	0.00
8	V3	V7		X	69.31	8.83	7.30	10.60	0.0	0.0	0.0	0.00
9	V4	V8		X	66.47	8.83	6.05	10.60	0.0	0.0	0.0	0.00
10	V5	V6		X	21.28	13.34	3.51	16.01	0.0	1.0	0.5	1.50
11	V5	V8		X	58.78	9.52	7.40	11.42	0.0	1.0	0.5	1.50
12	V6	V7		X	57.68	9.52	6.50	11.42	0.0	1.0	0.5	1.50
13	V7	V8		X	22.61	14.90	2.91	17.88	0.0	1.0	0.5	1.50
14	V5	V9		X	36.41	5.09	7.70	20.84	0.7	0.0	0.0	0.70
15	V6	V10		X	35.75	5.09	6.76	19.51	0.7	0.0	0.0	0.70
16	V7	V11		X	40.54	5.09	6.72	19.46	0.7	0.0	0.0	0.70
17	V8	V12		X	41.38	5.09	6.89	19.70	0.7	0.0	0.0	0.70
18	V9	V10		X	14.54	13.34	3.25	16.01	0.0	1.0	0.5	1.50
19	V9	V12		X	40.17	9.52	6.32	11.42	0.0	1.0	0.5	1.50
20	V10	V11		X	40.17	9.52	6.32	11.42	0.0	1.0	0.5	1.50
21	V11	V12		X	17.39	14.90	3.71	17.88	0.0	1.0	0.5	1.50
22	V9	V13		X	60.68	6.84	7.70	8.21	0.0	0.0	0.0	0.00
23	V10	V14		X	59.58	6.84	6.76	8.21	0.0	0.0	0.0	0.00

Table B-5 Pressurizer Compartment Vent Path Description

B. Break Type : Pressurizer relief line(6B) guillotine break
Break Area : 0.2532(ft^2)
Break location : Volume number 39

Vent Path No.	Volume No.		Description of Vent Path Flow		Area (ft^2)	Inertia Length (ft)	Hydraulic Diameter (ft)	Friction Length (ft)	Loss Coefficient K			
	From	To	Choked	Unchoked					Turning and Obstruction	Expansion	Contraction	Total
24	V11	V15		X	67.57	6.84	6.72	8.21	0.0	0.0	0.0	0.00
25	V12	V16		X	68.97	6.84	6.89	8.21	0.0	0.0	0.0	0.00
26	V13	V14		X	14.54	13.34	3.25	16.01	0.0	1.0	0.5	1.50
27	V13	V16		X	40.17	9.52	6.32	11.42	0.0	1.0	0.5	1.50
28	V14	V15		X	39.07	9.52	5.36	11.42	0.0	1.0	0.5	1.50
29	V15	V16		X	15.95	14.90	2.60	17.88	0.0	1.0	0.5	1.50
30	V13	V17		X	36.41	4.15	7.70	18.94	0.7	0.0	0.0	0.70
31	V14	V18		X	36.41	4.15	7.70	18.94	0.7	0.0	0.0	0.70
32	V15	V19		X	39.02	4.15	5.23	15.46	0.7	0.0	0.0	0.70
33	V16	V20		X	42.25	4.15	8.23	19.69	0.7	0.0	0.0	0.70
34	V17	V18		X	14.54	13.34	3.25	16.01	0.0	1.0	0.5	1.50
35	V17	V20		X	40.17	9.52	6.32	11.42	0.0	1.0	0.5	1.50
36	V18	V19		X	40.17	9.52	6.32	11.42	0.0	1.0	0.5	1.50
37	V19	V20		X	17.39	14.90	3.71	17.88	0.0	1.0	0.5	1.50
38	V17	V21		X	60.68	6.84	7.70	8.21	0.0	0.0	0.0	0.00
39	V18	V22		X	60.68	6.84	7.70	8.21	0.0	0.0	0.0	0.00
40	V19	V23		X	62.66	6.84	4.66	8.21	0.0	0.0	0.0	0.00
41	V20	V24		X	70.41	6.84	8.23	8.21	0.0	0.0	0.0	0.00
42	V21	V22		X	14.54	13.34	3.25	16.01	0.0	1.0	0.5	1.50
43	V21	V24		X	40.17	9.52	6.32	11.42	0.0	1.0	0.5	1.50
44	V22	V23		X	40.17	9.52	6.32	11.42	0.0	1.0	0.5	1.50
45	V23	V24		X	14.55	14.90	2.35	17.88	0.0	1.0	0.5	1.50
46	V21	V25		X	36.41	4.77	7.70	20.19	0.7	0.0	0.0	0.70
47	V22	V26		X	36.41	4.77	7.70	20.19	0.7	0.0	0.0	0.70

Table B-5 Pressurizer Compartment Vent Path Description

B. Break Type : Pressurizer relief line(6B) guillotine break
Break Area : 0.2532(ft^2)
Break location : Volume number 39

Vent Path No.	Volume No.		Description of Vent Path Flow		Area (ft^2)	Inertia Length (ft)	Hydraulic Diameter (ft)	Friction Length (ft)	Loss Coefficient K			
	From	To	Choked	Unchoked					Turning and Obstruction	Expansion	Contraction	Total
48	V23	V27		X	40.72	4.77	6.20	18.07	0.7	0.0	0.0	0.70
49	V24	V28		X	40.54	4.77	6.72	18.81	0.7	0.0	0.0	0.70
50	V25	V26		X	18.91	13.34	3.12	16.01	0.0	1.0	0.5	1.50
51	V25	V28		X	52.41	9.52	5.37	11.42	0.0	1.0	0.5	1.50
52	V26	V27		X	52.34	9.52	5.33	11.42	0.0	1.0	0.5	1.50
53	V27	V28		X	22.62	14.90	3.49	17.88	0.0	1.0	0.5	1.50
54	V25	V29		X	59.77	6.63	6.68	7.96	0.0	0.0	0.5	0.50
55	V26	V30		X	54.42	6.63	3.60	7.96	0.0	0.0	0.5	0.50
56	V27	V31		X	61.81	6.63	3.38	7.96	0.0	0.0	0.5	0.50
57	V28	V32		X	64.65	6.63	5.11	7.96	0.0	0.0	0.5	0.50
58	V29	V30		X	5.86	13.34	1.25	16.01	0.0	1.0	0.5	1.50
59	V29	V32		X	25.47	9.52	4.99	11.42	0.0	1.0	0.5	1.50
60	V30	V31		X	21.58	9.52	2.86	11.42	0.0	1.0	0.5	1.50
61	V31	V32		X	8.13	14.90	1.63	17.88	0.0	1.0	0.5	1.50
62	V29	V33		X	45.74	3.08	7.62	16.70	0.7	0.0	0.0	0.70
63	V30	V34		X	45.07	3.08	6.70	15.41	0.7	0.0	0.0	0.70
64	V31	V35		X	52.21	3.08	7.12	16.00	0.7	0.0	0.0	0.70
65	V32	V36		X	52.74	3.08	8.21	17.54	0.7	0.0	0.0	0.70
66	V33	V34		X	14.80	14.00	2.51	16.80	0.0	1.0	0.5	1.50
67	V33	V36		X	39.89	10.50	6.29	12.60	0.0	1.0	0.5	1.50
68	V34	V35		X	39.89	10.50	6.29	12.60	0.0	1.0	0.5	1.50
69	V35	V36		X	20.56	15.84	4.40	19.01	0.0	1.0	0.5	1.50
70	V33	V37		X	74.83	5.58	7.30	6.70	0.0	0.0	0.5	0.50
71	V34	V38		X	72.30	5.58	6.29	6.70	0.0	0.0	0.5	0.50

Table B-5 Pressurizer Compartment Vent Path Description

B. Break Type : Pressurizer relief line(6B) guillotine break
Break Area : 0.2532(ft^2)
Break location : Volume number 39

Vent Path No.	Volume No.		Description of Vent Path Flow		Area (ft^2)	Inertia Length (ft)	Hydraulic Diameter (ft)	Friction Length (ft)	Loss Coefficient K			
	From	To	Choked	Unchoked					Turning and Obstruction	Expansion	Contraction	Total
72	V35	V39		X	85.94	5.58	7.19	6.70	0.0	0.0	0.5	0.50
73	V36	V40		X	86.60	5.58	7.39	6.70	0.0	0.0	0.5	0.50
74	V37	V38		X	38.77	9.60	4.55	11.52	0.0	1.0	0.5	1.50
75	V37	V40		X	61.30	7.63	7.22	9.16	0.0	1.0	0.5	1.50
76	V38	V39		X	61.03	7.63	6.82	9.16	0.0	1.0	0.5	1.50
77	V39	V40		X	35.21	11.76	3.56	14.11	0.0	1.0	0.5	1.50
78	V37	V41		X	51.94	4.60	9.22	22.00	0.7	0.0	0.0	0.70
79	V38	V42		X	51.77	4.60	8.76	21.35	0.7	0.0	0.0	0.70
80	V39	V43		X	58.56	4.60	8.89	21.53	0.7	0.0	0.0	0.70
81	V40	V44		X	58.56	4.60	8.89	21.53	0.7	0.0	0.0	0.70
82	V41	V42		X	58.26	9.60	3.81	11.52	0.0	1.0	0.5	1.50
83	V41	V44		X	100.97	7.63	8.32	9.16	0.0	1.0	0.5	1.50
84	V42	V43		X	100.19	7.63	7.76	9.16	0.0	1.0	0.5	1.50
85	V43	V44		X	58.79	11.76	4.66	14.11	0.0	1.0	0.5	1.50
86	V43	V45		X	20.75	9.00	4.19	10.80	0.84	1.0	0.5	2.34
87	V44	V45		X	32.78	9.03	4.98	10.84	0.84	1.0	0.5	2.34
88	V4	V45		X	9.00	7.57	3.00	9.08	0.17	1.0	0.5	1.67

Table B-6 Mass and Release Rates for Pressurizer Compartment Peak Pressure Analyses

B. Break Type : Pressurizer relief line(8B) guillotine break

Break Area : 0.2532(ft^2)

Break location : Volume number 39

*Mass Release Rate was doubled from the following value for guillotine break.

Time (s)	Mass Release Rate* (lbm/s)	Enthalpy (BTU/lbm)
0	0	1101.12
0.001	1162.03	1101.12
0.002	2123.8	1114.97
0.003	2267.31	1115.41
0.004	2231.63	1114.51
0.005	2218.07	1114.33
0.006	2213.22	1114.36
0.007	2210.68	1114.45
0.008	2210.88	1114.58
0.009	2212.39	1114.75
0.01	2213.43	1114.9
0.011	2212.37	1115.02
0.012	2208.2	1115.08
0.013	2200.67	1115.06
0.014	2189.89	1114.97
0.015	2176.54	1114.84
0.016	2161.68	1114.68
0.017	2146.89	1114.51
0.018	2133.74	1114.38
0.019	2123.44	1114.3
0.02	2116.7	1114.28
0.021	2113.6	1114.34
0.022	2113.59	1114.46
0.023	2115.55	1114.63
0.024	2118.07	1114.8
0.025	2119.66	1114.95
0.026	2118.7	1115.07
0.027	2114.63	1115.12
0.028	2107.6	1115.08
0.029	2097.39	1114.97
0.03	2084.5	1114.84
0.031	2070.27	1114.67
0.032	2056.06	1114.5
0.033	2043.36	1114.36
0.034	2033.3	1114.26
0.035	2026.54	1114.23
0.036	2023.14	1114.27
0.037	2022.57	1114.37
0.038	2023.8	1114.51
0.039	2025.49	1114.65
0.04	2026.26	1114.77

Table B-6 Mass and Release Rates for Pressurizer Compartment Peak Pressure Analyses

B. Break Type : Pressurizer relief line(8B) guillotine break

Break Area : 0.2532(ft^2)

Break location : Volume number 39

*Mass Release Rate was doubled from the following value for guillotine break.

Time (s)	Mass Release Rate* (lbm/s)	Enthalpy (BTU/lbm)
0.041	2024.89	1114.85
0.042	2020.55	1114.87
0.043	2012.93	1114.83
0.044	2002.24	1114.71
0.045	1989.26	1114.55
0.046	1975.14	1114.36
0.047	1961.26	1114.17
0.048	1949	1114.02
0.049	1939.48	1113.92
0.05	1933.37	1113.89
0.051	1930.78	1113.93
0.052	1931.22	1114.04
0.053	1933.74	1114.19
0.054	1937.08	1114.36
0.055	1939.92	1114.51
0.056	1941.11	1114.64
0.057	1939.84	1114.71
0.058	1935.75	1114.72
0.059	1929	1114.67
0.06	1920.18	1114.58
0.061	1910.26	1114.47
0.062	1900.35	1114.35
0.063	1891.58	1114.25
0.064	1884.81	1114.2
0.065	1880.53	1114.2
0.066	1878.75	1114.25
0.067	1879.01	1114.34
0.068	1880.45	1114.46
0.069	1881.97	1114.58
0.07	1882.49	1114.68
0.071	1881.05	1114.74
0.072	1877.05	1114.74
0.073	1870.27	1114.68
0.074	1860.99	1114.57
0.075	1849.89	1114.42
0.076	1837.94	1114.24
0.077	1826.29	1114.07
0.078	1816.05	1113.93
0.079	1808.08	1113.83
0.08	1802.84	1113.8
0.081	1800.3	1113.82

Table B-6 Mass and Release Rates for Pressurizer Compartment Peak Pressure Analyses

B. Break Type : Pressurizer relief line(8B) guillotine break

Break Area : 0.2532(ft^2)

Break location : Volume number 39

*Mass Release Rate was doubled from the following value for guillotine break.

Time (s)	Mass Release Rate* (lbm/s)	Enthalpy (BTU/lbm)
0.082	1799.98	1113.89
0.083	1801	1113.99
0.084	1802.31	1114.1
0.085	1802.83	1114.19
0.086	1801.65	1114.24
0.087	1798.19	1114.25
0.088	1792.29	1114.19
0.089	1784.22	1114.09
0.09	1774.65	1113.96
0.091	1764.51	1113.8
0.092	1754.89	1113.66
0.093	1746.78	1113.55
0.094	1740.95	1113.49
0.095	1737.74	1113.49
0.096	1737.05	1113.55
0.097	1738.43	1113.65
0.098	1741.42	1113.78
0.099	1745.09	1113.9
0.1	1748.27	1114.02
0.101	1749.5	1114.1
0.102	1748	1114.14
0.103	1743.54	1114.13
0.104	1736.41	1114.08
0.105	1727.36	1113.99
0.106	1717.46	1113.88
0.107	1707.91	1113.78
0.108	1699.78	1113.7
0.109	1693.88	1113.66
0.11	1690.54	1113.66
0.111	1689.64	1113.7
0.112	1690.59	1113.78
0.113	1692.46	1113.87
0.114	1694.17	1113.95
0.115	1694.63	1114.02
0.116	1693	1114.05
0.117	1688.79	1114.03
0.118	1681.97	1113.97
0.119	1672.99	1113.88
0.12	1662.69	1113.76
0.121	1652.18	1113.63
0.122	1642.62	1113.51

Table B-6 Mass and Release Rates for Pressurizer Compartment Peak Pressure Analyses

B. Break Type : Pressurizer relief line(8B) guillotine break

Break Area : 0.2532(ft^2)

Break location : Volume number 39

*Mass Release Rate was doubled from the following value for guillotine break.

Time (s)	Mass Release Rate* (lbm/s)	Enthalpy (BTU/lbm)
0.123	1635.01	1113.43
0.124	1630.05	1113.4
0.125	1628.04	1113.41
0.126	1628.76	1113.48
0.127	1631.65	1113.58
0.128	1635.7	1113.7
0.129	1639.8	1113.83
0.13	1642.93	1113.93
0.131	1644.27	1114
0.132	1643.34	1114.04
0.133	1640.11	1114.03
0.134	1634.93	1113.99
0.135	1628.55	1113.93
0.136	1621.87	1113.86
0.137	1615.89	1113.81
0.138	1611.43	1113.77
0.139	1609.03	1113.78
0.14	1608.86	1113.82
0.141	1610.7	1113.9
0.142	1613.97	1114
0.143	1617.83	1114.11
0.144	1621.34	1114.22
0.145	1623.61	1114.3
0.146	1623.96	1114.35
0.147	1622	1114.36
0.148	1617.72	1114.34
0.149	1611.5	1114.27
0.15	1604	1114.19
0.151	1596.09	1114.1
0.152	1588.67	1114.01
0.153	1582.49	1113.95
0.154	1578.07	1113.91
0.155	1575.56	1113.91
0.156	1574.8	1113.93
0.157	1575.26	1113.98
0.158	1576.24	1114.04
0.159	1576.9	1114.09
0.16	1576.49	1114.12
0.161	1574.45	1114.13
0.162	1570.49	1114.1
0.163	1564.68	1114.04

Table B-6 Mass and Release Rates for Pressurizer Compartment Peak Pressure Analyses

B. Break Type : Pressurizer relief line(8B) guillotine break

Break Area : 0.2532(ft^2)

Break location : Volume number 39

*Mass Release Rate was doubled from the following value for guillotine break.

Time (s)	Mass Release Rate* (lbm/s)	Enthalpy (BTU/lbm)
0.164	1557.42	1113.95
0.165	1549.38	1113.85
0.166	1541.4	1113.74
0.167	1534.3	1113.65
0.168	1528.79	1113.59
0.169	1525.3	1113.56
0.17	1523.95	1113.57
0.171	1524.49	1113.62
0.172	1526.38	1113.69
0.173	1528.87	1113.77
0.174	1531.14	1113.85
0.175	1532.43	1113.9
0.176	1532.12	1113.93
0.177	1529.91	1113.93
0.178	1525.82	1113.89
0.179	1520.16	1113.82
0.18	1513.52	1113.74
0.181	1506.65	1113.65
0.182	1500.3	1113.56
0.183	1495.1	1113.5
0.184	1491.48	1113.47
0.185	1489.56	1113.46
0.186	1489.18	1113.49
0.187	1489.91	1113.53
0.188	1491.13	1113.59
0.189	1492.19	1113.64
0.19	1492.48	1113.67
0.191	1491.55	1113.69
0.192	1489.2	1113.67
0.193	1485.51	1113.64
0.194	1480.79	1113.58
0.195	1475.58	1113.51
0.196	1470.51	1113.45
0.197	1466.17	1113.4
0.198	1463.03	1113.37
0.199	1461.36	1113.37
0.2	1461.12	1113.39
0.205	1466.07	1113.62
0.21	1446.73	1113.4
0.215	1433.8	1113.27
0.22	1444.68	1113.6

Table B-6 Mass and Release Rates for Pressurizer Compartment Peak Pressure Analyses
B. Break Type : Pressurizer relief line(8B) guillotine break
Break Area : 0.2532(ft^2)
Break location : Volume number 39

*Mass Release Rate was doubled from the following value for guillotine break.

Time (s)	Mass Release Rate* (lbm/s)	Enthalpy (BTU/lbm)
0.225	1437.22	1113.58
0.23	1426.6	1113.49
0.235	1425.45	1113.58
0.24	1410.35	1113.41
0.245	1401.09	1113.33
0.25	1402.43	1113.45
0.255	1389.19	1113.29
0.26	1379.35	1113.19
0.265	1380.65	1113.3
0.27	1373.08	1113.23
0.275	1367.02	1113.19
0.28	1366.01	1113.25
0.285	1357.66	1113.16
0.29	1353.56	1113.14
0.295	1353.83	1113.22
0.3	1346.15	1113.13
0.305	1341.61	1113.1
0.31	1342.59	1113.18
0.315	1338.76	1113.17
0.32	1335.76	1113.16
0.325	1333.72	1113.18
0.33	1327.49	1113.11
0.335	1324.91	1113.11
0.34	1324.74	1113.16
0.345	1320.1	1113.11
0.35	1316.84	1113.09
0.355	1315.52	1113.11
0.36	1311.65	1113.08
0.365	1308.88	1113.06
0.37	1306.41	1113.06
0.375	1302.02	1113.01
0.38	1300.26	1113.01
0.385	1299.72	1113.04
0.39	1296.87	1113.01
0.395	1294.82	1113.01
0.4	1293.53	1113.02
0.405	1291.28	1113
0.41	1290.05	1113.01
0.415	1288.8	1113.02
0.42	1286.57	1113
0.425	1285.93	1113.02

Table B-6 Mass and Release Rates for Pressurizer Compartment Peak Pressure Analyses

B. Break Type : Pressurizer relief line(8B) guillotine break

Break Area : 0.2532(ft^2)

Break location : Volume number 39

*Mass Release Rate was doubled from the following value for guillotine break.

Time (s)	Mass Release Rate* (lbm/s)	Enthalpy (BTU/lbm)
0.43	1285.74	1113.05
0.435	1284.07	1113.05
0.44	1282.54	1113.04
0.445	1281.17	1113.05
0.45	1279.65	1113.04
0.455	1279.04	1113.06
0.46	1278.18	1113.07
0.465	1276.44	1113.06
0.47	1275.34	1113.06
0.475	1274.42	1113.07
0.48	1272.97	1113.07
0.485	1271.77	1113.07
0.49	1270.63	1113.07
0.495	1269.55	1113.07
0.5	1269.05	1113.09
0.6	1260.71	1113.31
0.7	1254.72	1113.63
0.8	1248.8	1114.06
0.9	1243.47	1114.54
1	1237.66	1115.02
1.1	1233.94	1115.58
1.2	1329.75	1118.64
1.3	1261.85	1116.89
1.4	1240.39	1116.24
1.5	1228.25	1116.11
1.6	1228.81	1116.41
1.7	1222.22	1116.58
1.8	1217.98	1116.92
1.9	1213.22	1117.33
2	1207.31	1117.74
2.1	1201.5	1118.3
2.2	1194.8	1118.86
2.3	1189.98	1119.52
2.4	1183.81	1120.17
2.5	1178.1	1120.86
2.6	1171.57	1121.56
2.7	1164.38	1122.25
2.8	1157.77	1123.03
2.9	1150.52	1123.84
3	1143.43	1124.67
3.1	1136.6	1125.55

Table B-6 Mass and Release Rates for Pressurizer Compartment Peak Pressure Analyses

B. Break Type : Pressurizer relief line(8B) guillotine break

Break Area : 0.2532(ft^2)

Break location : Volume number 39

*Mass Release Rate was doubled from the following value for guillotine break.

Time (s)	Mass Release Rate* (lbm/s)	Enthalpy (BTU/lbm)
3.2	1130.06	1126.45
3.3	1123.91	1127.35
3.4	1118.02	1128.24
3.5	1112.39	1129.1
3.6	1107	1129.93
3.7	1101.77	1130.72
3.8	1096.69	1131.48
3.9	1091.87	1132.19
4	1087.16	1132.86
4.1	1082.53	1133.5
4.2	1078	1134.1
4.3	1073.49	1134.66
4.4	1069.07	1135.2
4.5	1064.76	1135.73
4.6	1060.51	1136.23
4.7	1056.32	1136.72
4.8	1052.18	1137.2
4.9	1048.09	1137.66
5	1044.04	1138.12

Table B-7 Pressurizer compartment Nodal Description (nodalization sensitivity study)

C. Break Type : Pressurizer spray line(6B) guillotine break
Break Area : 0.1467(ft^2)
Break location : Volume number 7

Volume No.	Description	Height (ft)	Free Volume (ft^3)	Initial Conditions			Calculated Peak Press. Diff. (psid)	Design Peak Press. Diff (psid)	Margin (%)
				Temp. (deg F)	Press. (psia)	Humid. (%)			
1	Bottom of pressurizer compartment; EL=58"-5'	7.66	1580	120	14.396	0	11.16	14	25.4
2	EL=66"-1	10.00	2144	120	14.396	0	11.16	14	25.4
3	EL=76"-1' (grating floor)	6.84	1500	120	14.396	0	11.15	14	25.6
4	EL=82"-11	6.83	1466	120	14.396	0	11.14	14	25.7
5	EL=89"-9' (grating floor)	6.83	1498	120	14.396	0	11.14	14	25.7
6	EL=96"-7'	6.84	1465	120	14.396	0	11.13	14	25.8
7	EL=103"-5' (grating floor)	8.91	1928	120	14.396	0	11.12	14	25.9
8	EL=112"-4'	4.34	862	120	14.396	0	11.00	14	27.3
9	EL=116"-8' (grating floor)	5.8	1619	120	14.396	0	10.87	14	28.8
10	Top of Pressurizer; EL=122"-5.6'	5.36	1923	120	14.396	0	10.80	14	29.6
11	Top of Pressurizer compartment; EL=127"-10' (grating floor)	9.84	3353	120	14.396	0	10.70	14	30.8
12	Containment atmosphere	200	2741212	120	14.396	0	—	—	—

Table B-8 Pressurizer compartment Vent path description (nodalization sensitivity study)

C. Break Type : Pressurizer spray line(6B) guillotine break

Break Area : 0.1467(ft^2)

Break location : Volume number 7

Vent Path No.	Volume No.		Description of Vent Path Flow		Area (ft^2)	Inertia Length (ft)	Hydraulic Diameter (ft)	Friction Length (ft)	Loss Coefficient K			
	From	To	Choked	Unchoked					Turning and Obstruction	Expansion	Contraction	Total
1	V1	V12		X	10.75	15.44	3.26	18.53	0.17	1.0	0.5	1.67
2	V1	V2		X	257.00	8.83	9.07	10.60	0.0	0.0	0.0	0.00
3	V2	V3		X	154.08	5.09	9.00	22.67	0.7	0.0	0.0	0.70
4	V3	V4		X	256.80	6.84	9.00	8.21	0.0	0.0	0.0	0.00
5	V4	V5		X	154.08	4.15	9.00	20.77	0.7	0.0	0.0	0.70
6	V5	V6		X	254.43	6.84	8.62	8.21	0.0	0.0	0.0	0.00
7	V6	V7		X	154.08	4.77	9.00	22.02	0.7	0.0	0.0	0.70
8	V7	V8		X	240.64	6.63	5.07	7.96	0.0	1.0	0.0	1.00
9	V8	V9		X	195.76	3.08	9.62	19.53	0.7	0.0	0.0	0.70
10	V9	V10		X	319.66	5.58	9.02	6.70	0.0	1.0	0.0	1.00
11	V10	V11		X	220.83	4.60	16.60	32.40	0.7	0.0	0.0	0.70
12	V11	V12	X		20.75	15.09	4.19	18.11	0.84	1.0	0.5	2.34
13	V11	V12	X		32.78	15.13	4.98	18.16	0.84	1.0	0.5	2.34
14	V1	V12		X	9.00	15.44	3.00	18.53	0.17	1.0	0.5	1.67

Table B-9 Pressurizer compartment Nodal Description (nodalization sensitivity study)
D. Break Type : Pressurizer relief line(8B) guillotine break

Break Area :
Break location : Volume number 10

Volume No.	Description	Height (ft)	Free Volume (ft^3)	Initial Conditions			Calculated Peak Press. Diff. (psid)	Design Peak Press. Diff (psid)	Margin (%)
				Temp. (deg F)	Press. (psia)	Humid. (%)			
1	Bottom of pressurizer compartment; EL=58"-5'	7.66	1580	120	14.396	0	5.52	14	153.6
2	EL=66"-1	10.00	2144	120	14.396	0	5.48	14	155.5
3	EL=76"-1' (grating floor)	6.84	1500	120	14.396	0	5.40	14	159.3
4	EL=82"-11	6.83	1466	120	14.396	0	5.30	14	164.2
5	EL=89"-9' (grating floor)	6.83	1498	120	14.396	0	5.17	14	170.8
6	EL=96"-7'	6.84	1465	120	14.396	0	4.99	14	180.6
7	EL=103"-5' (grating floor)	8.91	1928	120	14.396	0	5.01	14	179.4
8	EL=112"-4'	4.34	862	120	14.396	0	5.08	14	175.6
9	EL=116"-8' (grating floor)	5.8	1619	120	14.396	0	5.11	14	174.0
10	Top of Pressurizer; EL=122"-5.6'	5.36	1923	120	14.396	0	5.12	14	173.4
11	Top of Pressurizer compartment; EL=127"-10' (grating floor)	9.84	3353	120	14.396	0	5.07	14	176.1
12	Containment atmosphere	200	2741212	120	14.396	0	–	–	–

Table B-10 Pressurizer compartment Vent Path Description (nodalization sensitivity study)

D. Break Type : Pressurizer relief line(8B) guillotine break

Break Area :

Break location : Volume number 10

Vent Path No.	Volume No.		Description of Vent Path Flow		Area (ft^2)	Inertia Length (ft)	Hydraulic Diameter (ft)	Friction Length (ft)	Loss Coefficient K			
	From	To	Choked	Unchoked					Turning and Obstruction	Expansion	Contraction	Total
1	V1	V12		X	10.75	15.44	3.26	18.53	0.17	1.0	0.5	1.67
2	V1	V2		X	257.00	8.83	9.07	10.60	0.0	0.0	0.0	0.00
3	V2	V3		X	154.08	5.09	9.00	22.67	0.7	0.0	0.0	0.70
4	V3	V4		X	256.80	6.84	9.00	8.21	0.0	0.0	0.0	0.00
5	V4	V5		X	154.08	4.15	9.00	20.77	0.7	0.0	0.0	0.70
6	V5	V6		X	254.43	6.84	8.62	8.21	0.0	0.0	0.0	0.00
7	V6	V7		X	154.08	4.77	9.00	22.02	0.7	0.0	0.0	0.70
8	V7	V8		X	240.64	6.63	5.07	7.96	0.0	0.0	0.5	0.50
9	V8	V9		X	195.76	3.08	9.62	19.53	0.7	0.0	0.0	0.70
10	V9	V10		X	319.66	5.58	9.02	6.70	0.0	0.0	0.5	0.50
11	V10	V11		X	220.83	4.60	16.60	32.40	0.7	0.0	0.0	0.70
12	V11	V12		X	20.75	15.09	4.19	18.11	0.84	1.0	0.5	2.34
13	V11	V12		X	32.78	15.13	4.98	18.16	0.84	1.0	0.5	2.34
14	V1	V12		X	9.00	15.44	3.00	18.53	0.17	1.0	0.5	1.67

Figure B-1 Nodalization scheme for pressurizer compartment analysis(1/3)

Figure B-2 Nodalization scheme for pressurizer compartment analysis (2/3)

Figure B-3 Nodalization scheme for pressurizer compartment analysis (2/3)

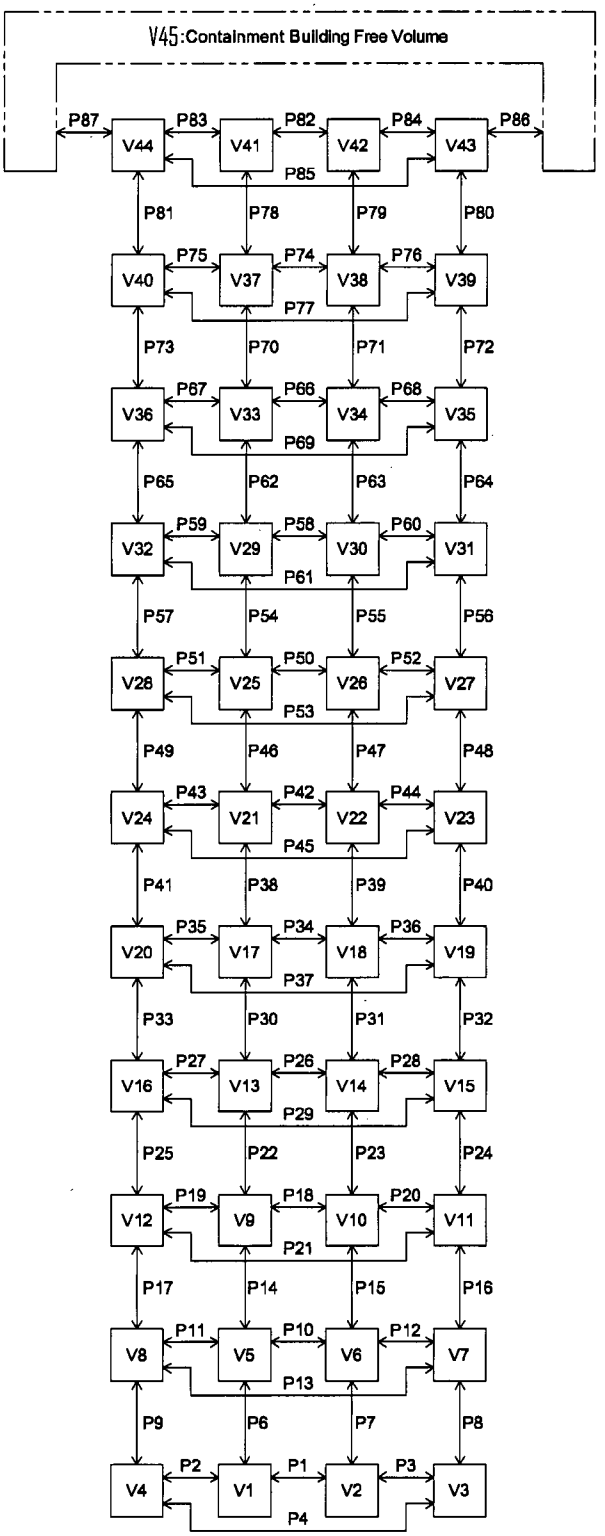

Figure B-4 Nodalization Diagram for Pressurizer Compartment Analysis

Figure B-5 Nodalization scheme for pressurizer compartment sensitivity analysis about nodalization

Figure B-6 Nodalization scheme for pressurizer compartment sensitivity analysis about nodalization

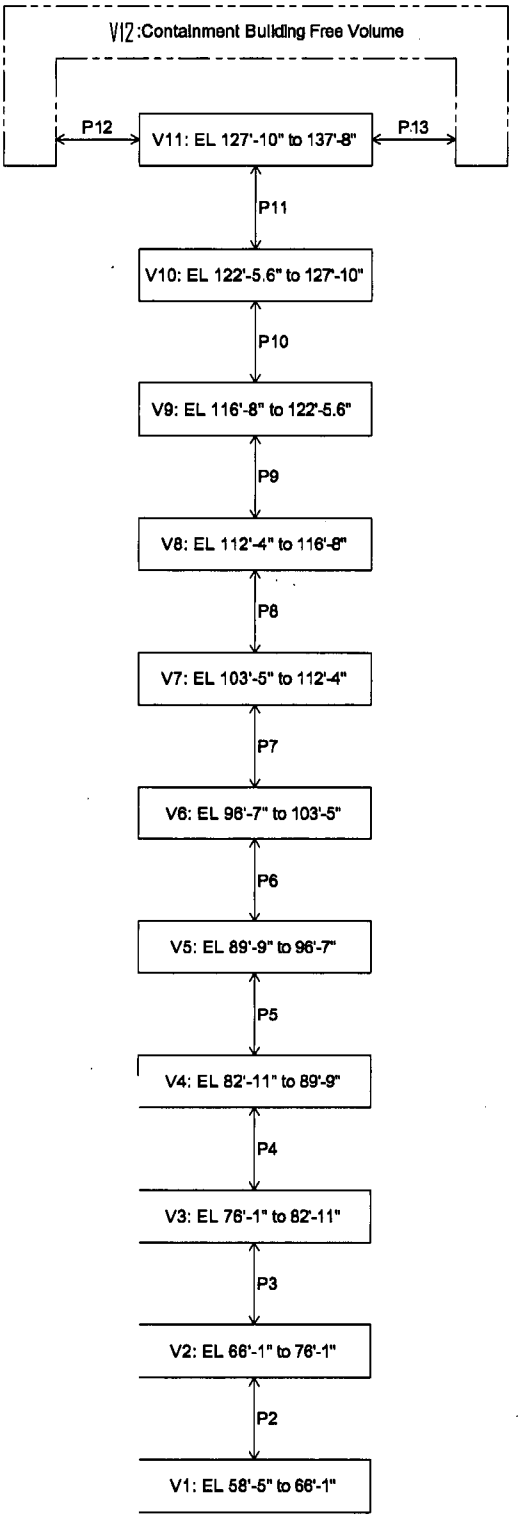

Figure B-7 Nodalization Diagram for pressurizer compartment sensitivity analysis

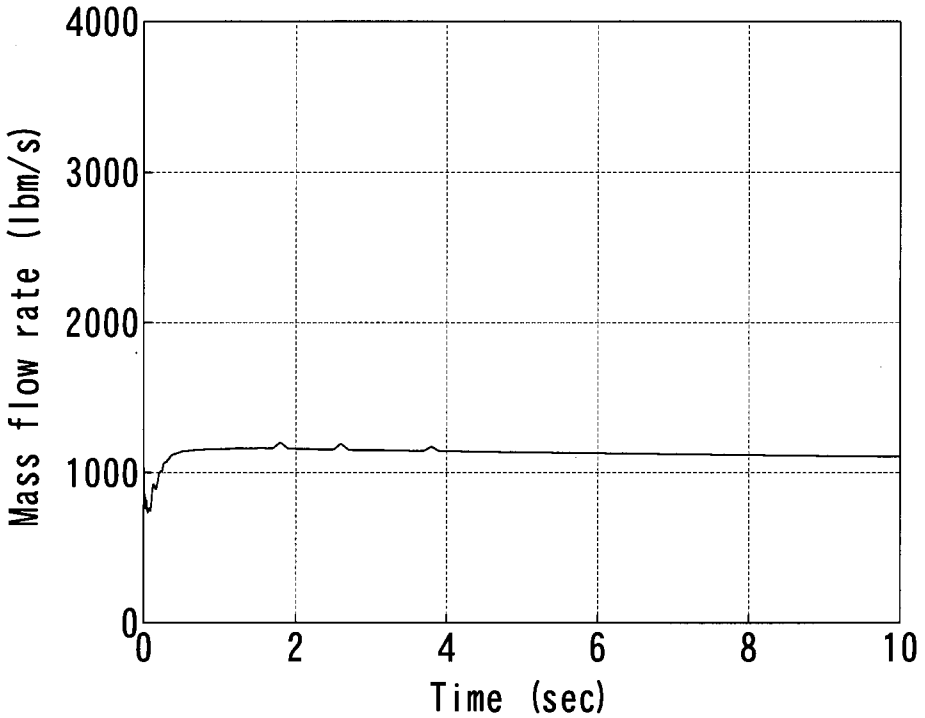

Figure B-8 Short term mass and energy release data for pressurizer compartment Pressurizer spray line break (B Loop cold leg side) (1/2)

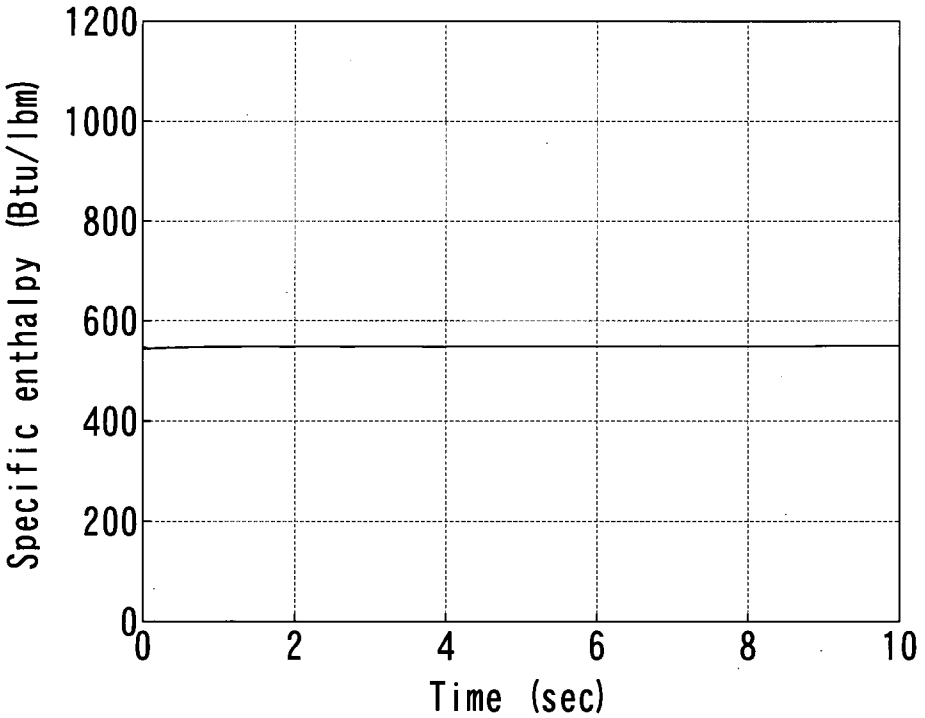

Figure B-9 Short term mass and energy release data for pressurizer compartment Pressurizer spray line break (B Loop cold leg side) (2/2)

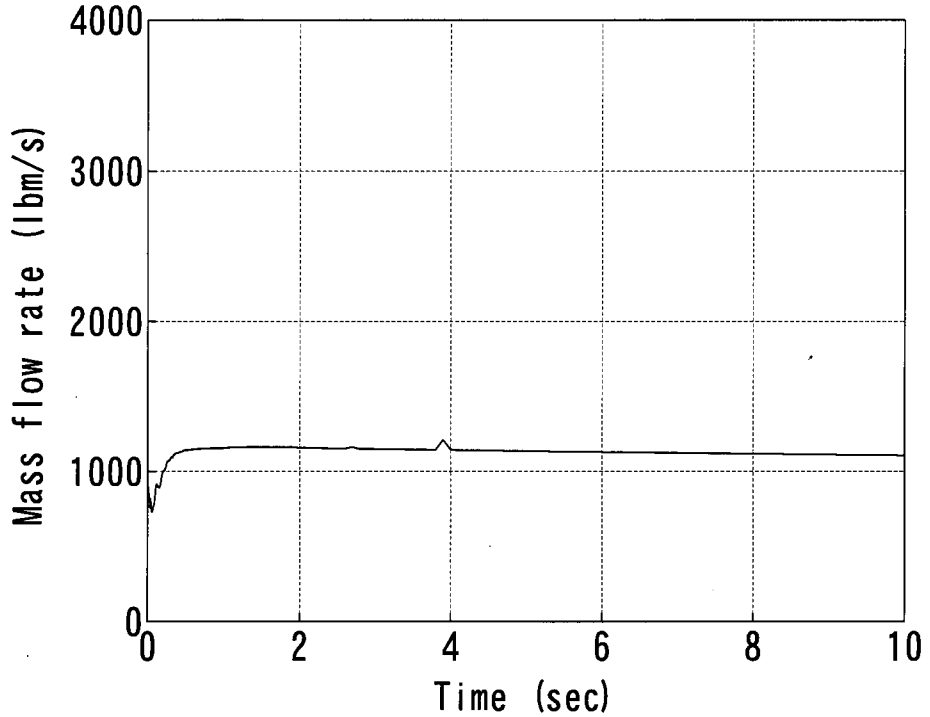

Figure B-10 Short term mass and energy release data for pressurizer compartment Pressurizer spray line break (C Loop cold leg side) (1/2)

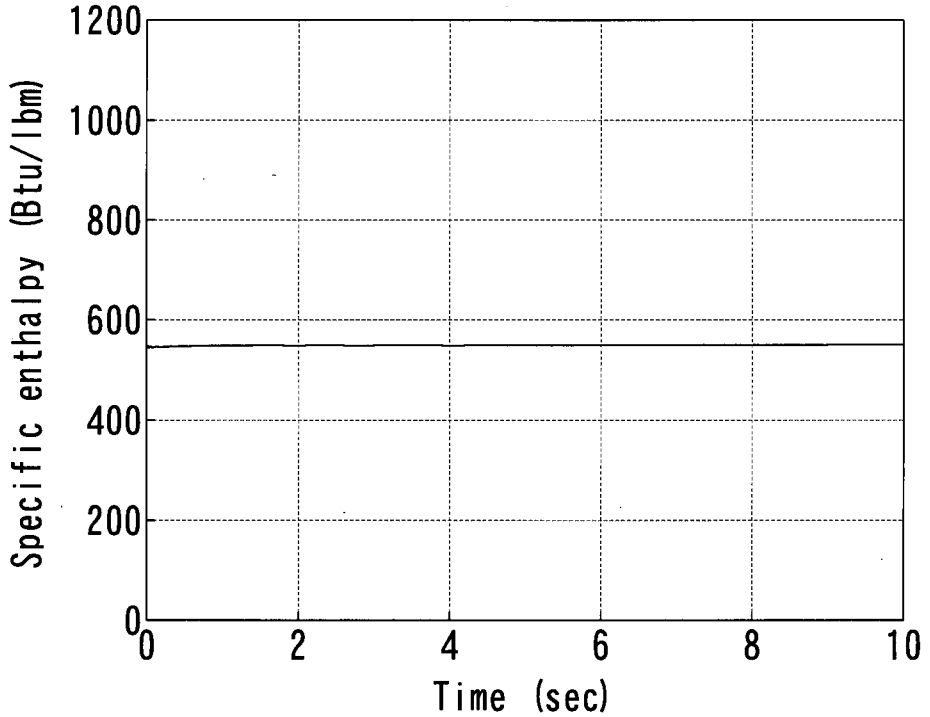

Figure B-11 Short term mass and energy release data for pressurizer compartment Pressurizer spray line break (C Loop cold leg side) (2/2)

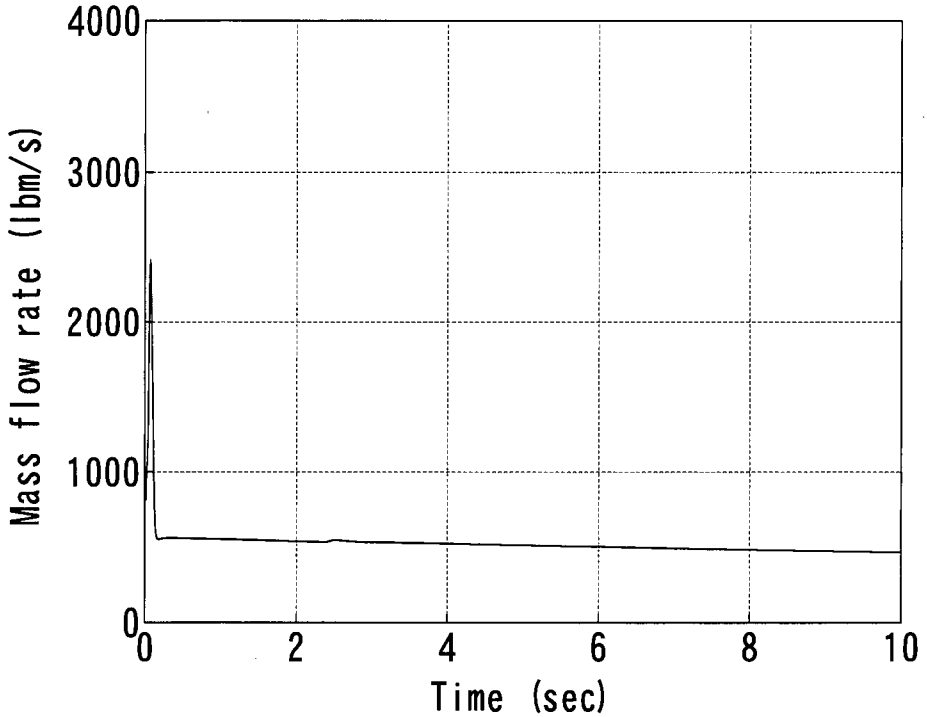

Figure B-12 Short term mass and energy release data for pressurizer compartment Pressurizer spray line break (pressurizer side) (1/2)

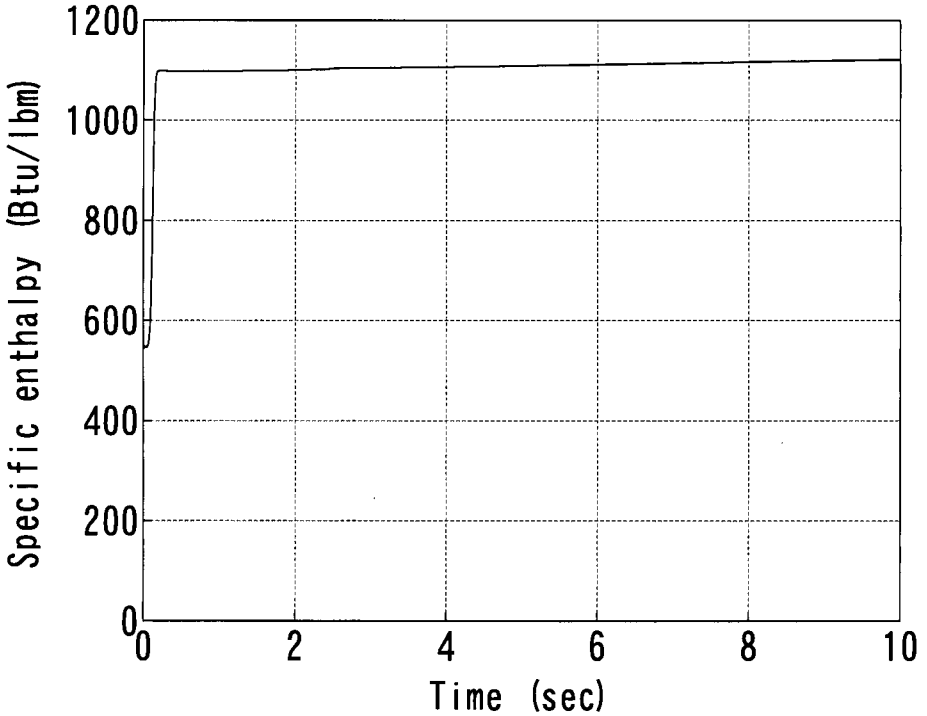

Figure B-13 Short term mass and energy release data for pressurizer compartment Pressurizer spray line break (pressurizer side) (2/2)

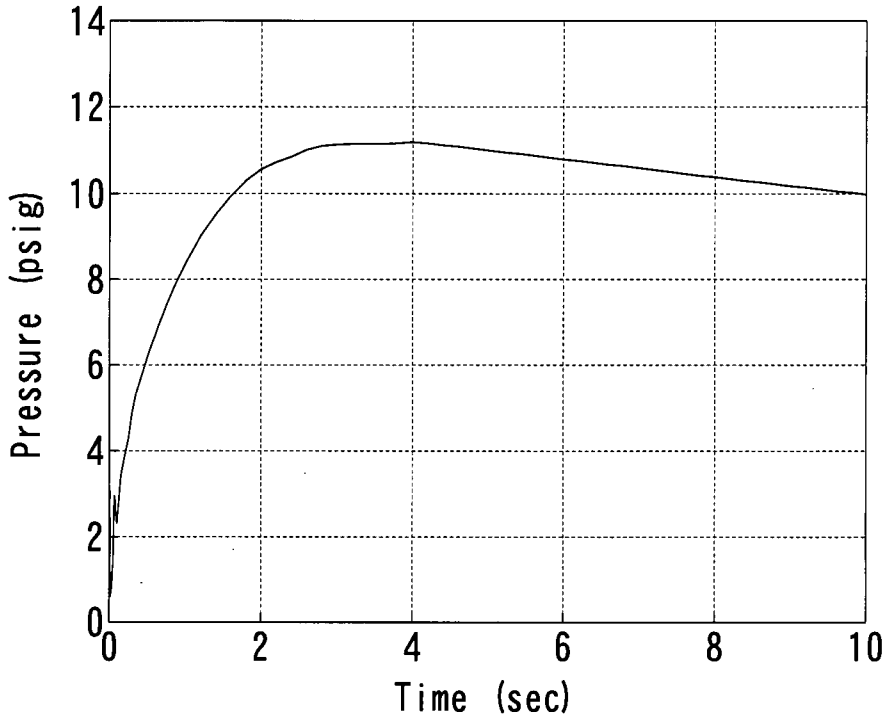

Figure B-14 Pressure transient at the peak pressure node (V27) in pressurizer compartment (Pressurizer spray line break)

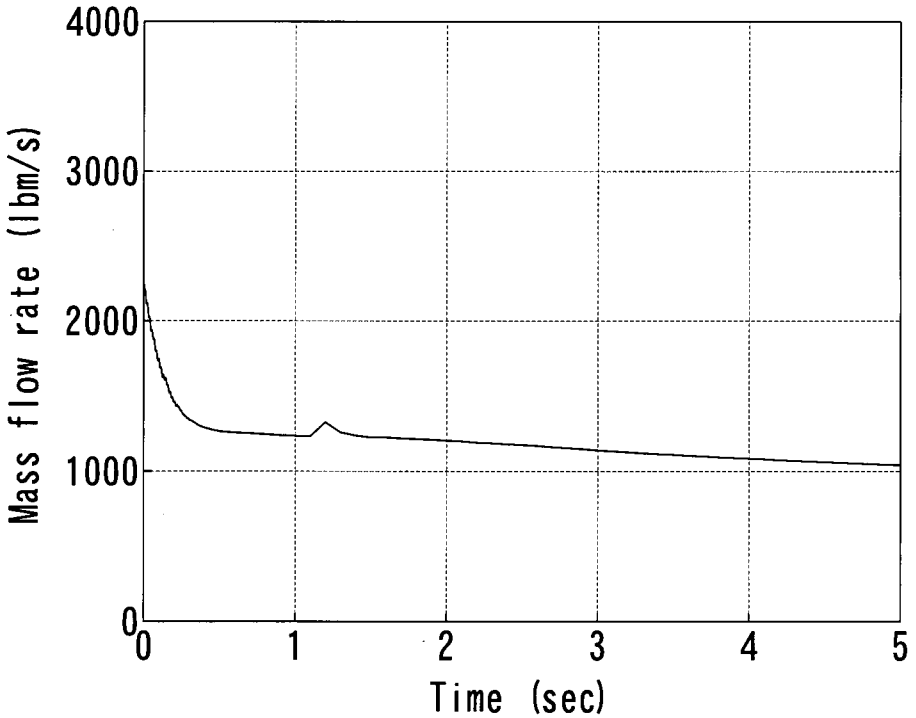

Figure B-15 Short term mass and energy release data for pressurizer compartment Pressurizer relief line break (1/2)

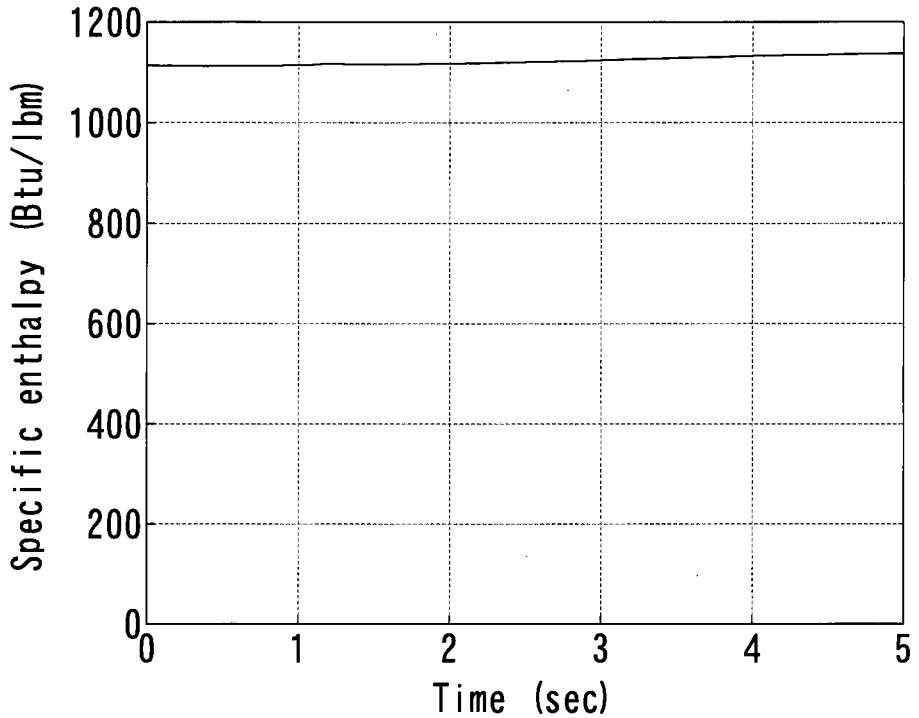

Figure B-16 Short term mass and energy release data for pressurizer compartment Pressurizer relief line break (2/2)

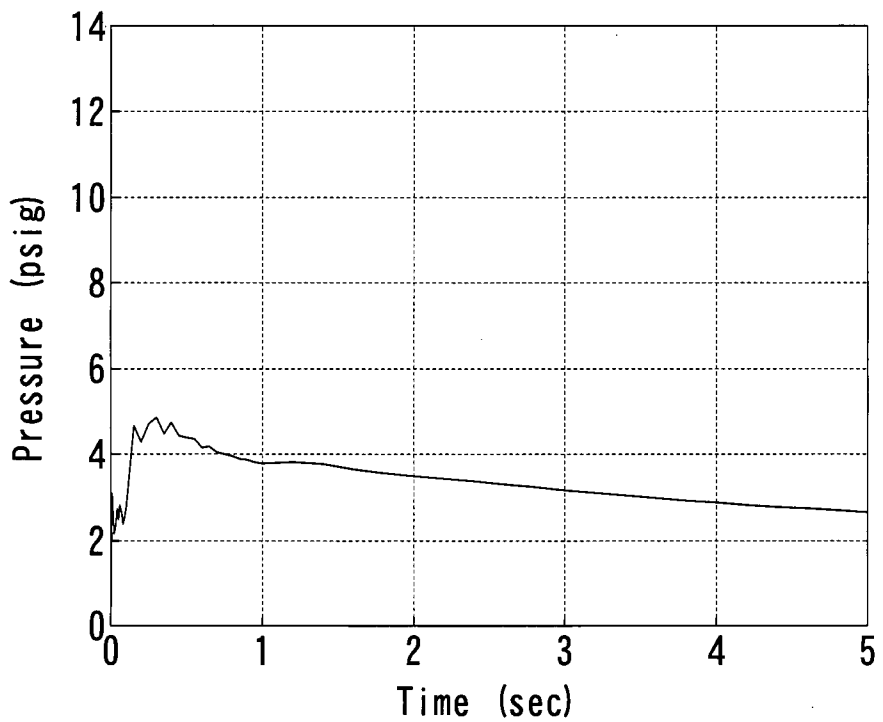

Figure B-17 Pressure transient at the peak pressure node (V39) in pressurizer compartment (Pressurizer relief line break)

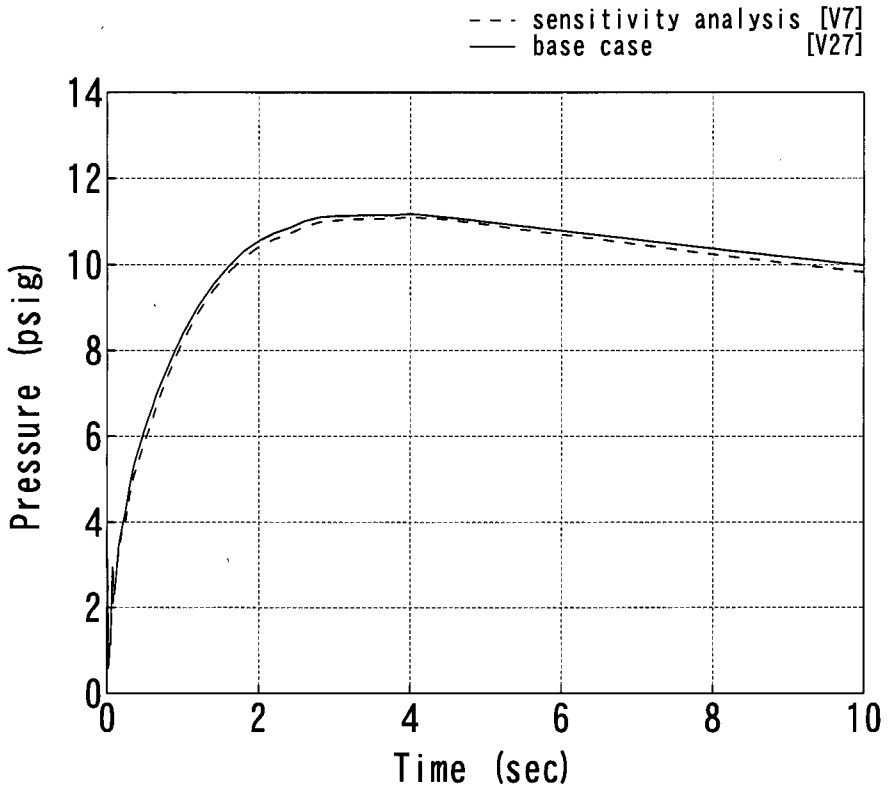

Figure B-18 Result of Nodalization Sensitivity Analysis (PRZ Spray Line Break)

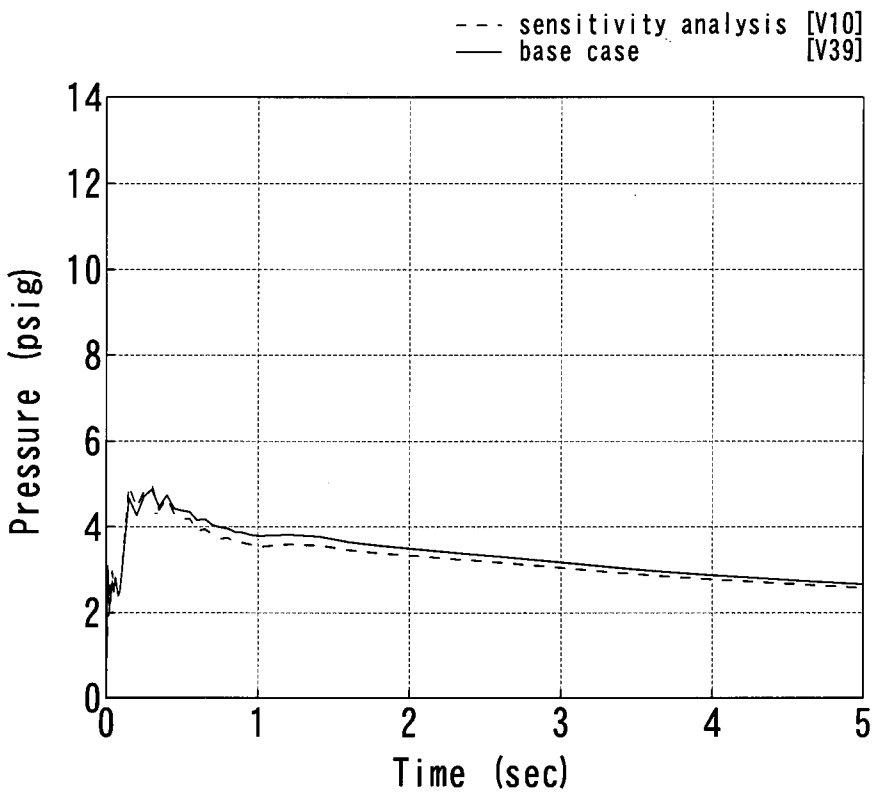

Figure B-19 Result of Nodalization Sensitivity Analysis (PRZ Relief Line Break)

Appendix-C
(Response to RAI No.111-932 February 2nd, 2009)

Detailed information for reactor cavity compartment analysis

(Non-proprietary)

List of Tables

Table C-1 Reactor cavity compartment Nodal Description 3
Table C-2 Reactor cavity Compartment Vent Path Description 16
Table C-3 Mass and Release Rates for Reactor Cavity Compartment Peak Pressure Analyses 26

List of Figures

Figure C-1 Nodalization scheme of reactor cavity 35
Figure C-2 Nodalization scheme of reactor cavity 36
Figure C-3 Nodalization diagram of reactor cavity in A-loop direction 37
Figure C-4 Nodalization diagram of reactor cavity in B-loop direction 38
Figure C-5 Nodalization diagram of reactor cavity in C-loop direction 39
Figure C-6 Nodalization diagram of reactor cavity in D-loop direction 40
Figure C-7 Nodalization diagram of reactor cavity 41
Figure C-8 Short term mass and energy release data for reactor cavity (1/2) 42
Figure C-9 Short term mass and energy release data for reactor cavity (2/2) 43
Figure C-10 Pressure transient at the peak pressure node(V50) in reactor cavity analysis 44

Table C-1 Reactor cavity compartment Nodal Description

A. Break Type : DVI(4B) guillotine break
Break Area : 0.065(ft^2)
Break location : Volume number 50

Volume No.	Description	Height (ft)	Free Volume (ft^3)	Initial Conditions			Calculated Peak Press. Diff. (psid)	Design Peak Press. Diff (psid)	Margin (%)
				Temp. (deg F)	Press. (psia)	Humid. (%)			
1	Exhaust duct:direction of A-CL	0.43	12.7	150	14.396	0	1.19	39	3177.3
2	Exhaust duct:direction of A-HL	0.43	6.7	150	14.396	0	1.06	39	3579.2
3	Exhaust duct:direction of B-HL	0.43	6.7	150	14.396	0	1.06	39	3579.2
4	Exhaust duct:direction of B-CL	0.43	12.0	150	14.396	0	1.20	39	3150.0
5	Exhaust duct:direction of C-CL	0.43	12.0	150	14.396	0	1.74	39	2141.4
6	Exhaust duct:direction of C-HL	0.43	6.7	150	14.396	0	1.45	39	2589.7
7	Exhaust duct:direction of D-HL	0.43	6.7	150	14.396	0	1.11	39	3413.5
8	Exhaust duct:direction of D-CL	0.43	12.7	150	14.396	0	1.32	39	2854.5
9	Approximately 1/8 of RV ring duct:direction of A-CL	1.65	10.9	150	14.396	0	2.38	39	1538.7
10	Approximately 1/8 of RV ring duct:direction of A-HL	1.65	10.9	150	14.396	0	2.37	39	1545.6
11	Approximately 1/8 of RV ring duct:direction of B-HL	1.65	10.9	150	14.396	0	2.37	39	1545.6

Table C-1 Reactor cavity compartment Nodal Description

A. Break Type : DVI(4B) guillotine break
Break Area : 0.065(ft^2)
Break location : Volume number 50

Volume No.	Description	Height (ft)	Free Volume (ft^3)	Initial Conditions			Calculated Peak Press. Diff. (psid)	Design Peak Press. Diff (psid)	Margin (%)
				Temp. (deg F)	Press. (psia)	Humid. (%)			
12	Approximately 1/8 of RV ring duct:direction of B-CL	1.65	10.9	150	14.396	0	2.37	39	1545.6
13	Approximately 1/8 of RV ring duct:direction of C-CL	1.65	10.9	150	14.396	0	2.37	39	1545.6
14	Approximately 1/8 of RV ring duct:direction of C-HL	1.65	10.9	150	14.396	0	2.36	39	1552.5
15	Approximately 1/8 of RV ring duct:direction of D-HL	1.65	10.9	150	14.396	0	2.36	39	1552.5
16	Approximately 1/8 of RV ring duct:direction of D-CL	1.65	10.9	150	14.396	0	2.38	39	1538.7
17	Approximately 1/8 of the upper inner cavity:direction of A-CL	3.74	11.9	150	14.396	0	5.44	39	616.9
18	Approximately 1/8 of the upper inner cavity:direction of A-HL	3.74	11.6	150	14.396	0	5.49	39	610.4
19	Approximately 1/8 of the upper inner cavity:direction of B-HL	3.74	11.6	150	14.396	0	5.42	39	619.6
20	Approximately 1/8 of the upper inner cavity:direction of B-CL	3.74	11.9	150	14.396	0	5.32	39	633.1

Table C-1 Reactor cavity compartment Nodal Description

A. Break Type : DVI(4B) guillotine break
Break Area : 0.065(ft^2)
Break location : Volume number 50

Volume No.	Description	Height (ft)	Free Volume (ft^3)	Initial Conditions			Calculated Peak Press. Diff. (psid)	Design Peak Press. Diff (psid)	Margin (%)
				Temp. (deg F)	Press. (psia)	Humid. (%)			
21	Approximately 1/8 of the upper inner cavity:direction of C-CL	3.74	11.9	150	14.396	0	5.27	39	640.0
22	Approximately 1/8 of the upper inner cavity:direction of C-HL	3.74	11.6	150	14.396	0	5.27	39	640.0
23	Approximately 1/8 of the upper inner cavity:direction of D-HL	3.74	11.6	150	14.396	0	5.28	39	638.6
24	Approximately 1/8 of the upper inner cavity:direction of D-CL	3.74	11.9	150	14.396	0	5.33	39	631.7
25	Approximately 1/8 of the lower inner cavity:direction of A-CL	4.79	19.5	150	14.396	0	6.47	39	502.8
26	Approximately 1/8 of the lower inner cavity:direction of A-HL	4.79	20.7	150	14.396	0	6.47	39	502.8
27	Approximately 1/8 of the lower inner cavity:direction of B-HL	4.79	20.7	150	14.396	0	6.46	39	503.7
28	Approximately 1/8 of the lower inner cavity:direction of B-CL	4.79	19.5	150	14.396	0	6.45	39	504.7
29	Approximately 1/8 of the lower inner cavity:direction of C-CL	4.79	19.5	150	14.396	0	6.43	39	506.5

Table C-1 Reactor cavity compartment Nodal Description

A. Break Type : DVI(4B) guillotine break
Break Area : 0.065(ft^2)
Break location : Volume number 50

Volume No.	Description	Height (ft)	Free Volume (ft^3)	Initial Conditions			Calculated Peak Press. Diff. (psid)	Design Peak Press. Diff (psid)	Margin (%)
				Temp. (deg F)	Press. (psia)	Humid. (%)			
30	Approximately 1/8 of the lower inner cavity:direction of C-HL	4.79	20.7	150	14.396	0	6.43	39	506.5
31	Approximately 1/8 of the lower inner cavity:direction of D-HL	4.79	20.7	150	14.396	0	6.44	39	505.6
32	Approximately 1/8 of the lower inner cavity:direction of D-CL	4.79	19.5	150	14.396	0	6.44	39	505.6
33	Path of cooling air in R/V support :direction of A-CL	5.46	9.6	150	14.396	0	6.90	39	465.2
34	Path of cooling air in R/V support :direction of A-HL	5.46	9.6	150	14.396	0	7.15	39	445.5
35	Path of cooling air in R/V support :direction of B-HL	5.46	9.6	150	14.396	0	6.78	39	475.2
36	Path of cooling air in R/V support :direction of B-CL	5.46	9.6	150	14.396	0	6.62	39	489.1
37	Path of cooling air in R/V support :direction of C-CL	5.46	9.6	150	14.396	0	6.49	39	500.9
38	Path of cooling air in R/V support :direction of C-HL	5.46	9.6	150	14.396	0	6.48	39	501.9

Table C-1 Reactor cavity compartment Nodal Description

A. Break Type : DVI(4B) guillotine break
Break Area : 0.065(ft^2)
Break location : Volume number 50

Volume No.	Description	Height (ft)	Free Volume (ft^3)	Initial Conditions			Calculated Peak Press. Diff. (psid)	Design Peak Press. Diff (psid)	Margin (%)
				Temp. (deg F)	Press. (psia)	Humid. (%)			
39	Path of cooling air in R/V support :direction of D-HL	5.46	9.6	150	14.396	0	6.50	39	500.0
40	Path of cooling air in R/V support :direction of D-CL	5.46	9.6	150	14.396	0	6.60	39	490.9
41	Approximately 1/8 of the upper inspection annulus:direction of A-CL	3.08	111.6	150	14.396	0	11.95	39	226.4
42	Approximately 1/8 of the upper inspection annulus:direction of A-HL	3.08	91.4	150	14.396	0	13.34	39	192.4
43	Approximately 1/8 of the upper inspection annulus:direction of B-HL	3.08	93.2	150	14.396	0	9.63	39	305.0
44	Approximately 1/8 of the upper inspection annulus:direction of B-CL	3.08	112.5	150	14.396	0	6.84	39	470.2
45	Approximately 1/8 of the upper inspection annulus:direction of C-CL	3.08	112.5	150	14.396	0	6.49	39	500.9

Table C-1 Reactor cavity compartment Nodal Description

A. Break Type : DVI(4B) guillotine break
Break Area : 0.065(ft^2)
Break location : Volume number 50

Volume No.	Description	Height (ft)	Free Volume (ft^3)	Initial Conditions			Calculated Peak Press. Diff. (psid)	Design Peak Press. Diff (psid)	Margin (%)
				Temp. (deg F)	Press. (psia)	Humid. (%)			
46	Approximately 1/8 of the upper inspection annulus:direction of C-HL	3.08	93.2	150	14.396	0	7.08	39	450.8
47	Approximately 1/8 of the upper inspection annulus:direction of D-HL	3.08	91.4	150	14.396	0	6.76	39	476.9
48	Approximately 1/8 of the upper inspection annulus:direction of D-CL	3.08	111.6	150	14.396	0	6.79	39	474.4
49	Approximately 1/8 of the lower inspection annulus:direction of A-CL	4.79	199.1	150	14.396	0	9.26	39	321.2
50	Approximately 1/8 of the lower inspection annulus:direction of A-HL	4.79	167.7	150	14.396	0	15.22	39	156.2
51	Approximately 1/8 of the lower inspection annulus:direction of B-HL	4.79	170.8	150	14.396	0	7.59	39	413.8

Table C-1 Reactor cavity compartment Nodal Description

A. Break Type : DVI(4B) guillotine break
Break Area : 0.065(ft^2)
Break location : Volume number 50

Volume No.	Description	Height (ft)	Free Volume (ft^3)	Initial Conditions			Calculated Peak Press. Diff. (psid)	Design Peak Press. Diff (psid)	Margin (%)
				Temp. (deg F)	Press. (psia)	Humid. (%)			
52	Approximately 1/8 of the lower inspection annulus:direction of B-CL	4.79	200.4	150	14.396	0	6.70	39	482.1
53	Approximately 1/8 of the lower inspection annulus:direction of C-CL	4.79	200.4	150	14.396	0	6.27	39	522.0
54	Approximately 1/8 of the lower inspection annulus:direction of C-HL	4.79	170.8	150	14.396	0	7.36	39	429.9
55	Approximately 1/8 of the lower inspection annulus:direction of D-HL	4.79	167.7	150	14.396	0	6.56	39	494.5
56	Approximately 1/8 of the lower inspection annulus:direction of D-CL	4.79	199.1	150	14.396	0	6.62	39	489.1
57	Upper portion of primary shield penetration for A-CL	2.21	29.2	150	14.396	0	10.16	39	283.9
58	Upper portion of primary shield penetration for A-HL	2.21	11.6	150	14.396	0	10.58	39	268.6

Table C-1 Reactor cavity compartment Nodal Description

A. Break Type : DVI(4B) guillotine break
Break Area : 0.065(ft^2)
Break location : Volume number 50

Volume No.	Description	Height (ft)	Free Volume (ft^3)	Initial Conditions			Calculated Peak Press. Diff. (psid)	Design Peak Press. Diff (psid)	Margin (%)
				Temp. (deg F)	Press. (psia)	Humid. (%)			
59	Upper portion of primary shield penetration for B-HL	2.21	11.3	150	14.396	0	6.25	39	524.0
60	Upper portion of primary shield penetration for B-CL	2.21	27.4	150	14.396	0	5.70	39	584.2
61	Upper portion of primary shield penetration for C-CL	2.21	27.4	150	14.396	0	4.85	39	704.1
62	Upper portion of primary shield penetration for C-HL	2.21	11.3	150	14.396	0	3.35	39	1064.2
63	Upper portion of primary shield penetration for D-HL	2.21	11.6	150	14.396	0	3.87	39	907.8
64	Upper portion of primary shield penetration for D-CL	2.21	29.2	150	14.396	0	5.83	39	569.0
65	Lower portion of primary shield penetration for A-CL	2.21	29.2	150	14.396	0	9.07	39	330.0
66	Lower portion of primary shield penetration for A-HL	2.21	11.6	150	14.396	0	8.12	39	380.3
67	Lower portion of primary shield penetration for B-HL	2.21	11.3	150	14.396	0	4.44	39	778.4

Table C-1 Reactor cavity compartment Nodal Description

A. Break Type : DVI(4B) guillotine break
Break Area : 0.065(ft^2)
Break location : Volume number 50

Volume No.	Description	Height (ft)	Free Volume (ft^3)	Initial Conditions			Calculated Peak Press. Diff. (psid)	Design Peak Press. Diff (psid)	Margin (%)
				Temp. (deg F)	Press. (psia)	Humid. (%)			
68	Lower portion of primary shield penetration for B-CL	2.21	27.4	150	14.396	0	5.55	39	602.7
69	Lower portion of primary shield penetration for C-CL	2.21	27.4	150	14.396	0	4.62	39	744.2
70	Lower portion of primary shield penetration for C-HL	2.21	11.3	150	14.396	0	3.37	39	1057.3
71	Lower portion of primary shield penetration for D-HL	2.21	11.6	150	14.396	0	3.58	39	989.4
72	Lower portion of primary shield penetration for D-CL	2.21	29.2	150	14.396	0	5.56	39	601.4
73	Primary shield penetration for A-DVI line	1.33	5.3	150	14.396	0	5.18	39	652.9
74	Primary shield penetration for B-DVI line	1.33	4.6	150	14.396	0	3.10	39	1158.1
75	Primary shield penetration for C-DVI line	1.33	4.6	150	14.396	0	2.44	39	1498.4
76	Primary shield penetration for D-DVI line	1.33	5.3	150	14.396	0	3.28	39	1089.0

Table C-1 Reactor cavity compartment Nodal Description

A. Break Type : DVI(4B) guillotine break
Break Area : 0.065(ft^2)
Break location : Volume number 50

Volume No.	Description	Height (ft)	Free Volume (ft^3)	Initial Conditions			Calculated Peak Press. Diff. (psid)	Design Peak Press. Diff (psid)	Margin (%)
				Temp. (deg F)	Press. (psia)	Humid. (%)			
77	Approximately 1/8 of upper cavity annulus:direction of A-CL	7.93	12.4	150	14.396	0	6.77	14	106.8
78	Approximately 1/8 of upper cavity annulus:direction of A-HL	7.93	12.4	150	14.396	0	6.83	14	105.0
79	Approximately 1/8 of upper cavity annulus:direction of B-HL	7.93	12.4	150	14.396	0	6.72	14	108.3
80	Approximately 1/8 of upper cavity annulus:direction of B-CL	7.93	12.4	150	14.396	0	6.61	14	111.8
81	Approximately 1/8 of upper cavity annulus:direction of C-CL	7.93	12.4	150	14.396	0	6.51	14	115.1
82	Approximately 1/8 of upper cavity annulus:direction of C-HL	7.93	12.4	150	14.396	0	6.50	14	115.4

Table C-1 Reactor cavity compartment Nodal Description

A. Break Type : DVI(4B) guillotine break
Break Area : 0.065(ft^2)
Break location : Volume number 50

Volume No.	Description	Height (ft)	Free Volume (ft^3)	Initial Conditions			Calculated Peak Press. Diff. (psid)	Design Peak Press. Diff (psid)	Margin (%)
				Temp. (deg F)	Press. (psia)	Humid. (%)			
83	Approximately 1/8 of upper cavity annulus:direction of D-HL	7.93	12.4	150	14.396	0	6.52	14	114.7
84	Approximately 1/8 of upper cavity annulus:direction of D-CL	7.93	12.4	150	14.396	0	6.61	14	111.8
85	Approximately 1/8 of lower cavity annulus:direction of A-CL	7.93	12.4	150	14.396	0	6.71	14	108.6
86	Approximately 1/8 of lower cavity annulus:direction of A-HL	7.93	12.4	150	14.396	0	6.73	14	108.0
87	Approximately 1/8 of lower cavity annulus:direction of B-HL	7.93	12.4	150	14.396	0	6.69	14	109.3
88	Approximately 1/8 of lower cavity annulus:direction of B-CL	7.93	12.4	150	14.396	0	6.63	14	111.2

Table C-1 Reactor cavity compartment Nodal Description

A. Break Type : DVI(4B) guillotine break
Break Area : 0.065(ft^2)
Break location : Volume number 50

Volume No.	Description	Height (ft)	Free Volume (ft^3)	Initial Conditions			Calculated Peak Press. Diff. (psid)	Design Peak Press. Diff (psid)	Margin (%)
				Temp. (deg F)	Press. (psia)	Humid. (%)			
89	Approximately 1/8 of lower cavity annulus:direction of C-CL	7.93	12.4	150	14.396	0	6.57	14	113.1
90	Approximately 1/8 of lower cavity annulus:direction of C-HL	7.93	12.4	150	14.396	0	6.57	14	113.1
91	Approximately 1/8 of lower cavity annulus:direction of D-HL	7.93	12.4	150	14.396	0	6.58	14	112.8
92	Approximately 1/8 of lower cavity annulus:direction of D-CL	7.93	12.4	150	14.396	0	6.63	14	111.2
93	Operation space of NIS:direction of A-CL	14.78	84.4	150	14.396	0	6.73	18	167.5
94	Operation space of NIS:direction of A-HL	14.78	251.8	150	14.396	0	6.75	18	166.7
95	Operation space of NIS:direction of B-HL	14.78	84.4	150	14.396	0	6.70	18	168.7
96	Operation space of NIS:direction of B-CL	14.78	84.4	150	14.396	0	6.63	18	171.5
97	Operation space of NIS:direction of C-CL	14.78	84.4	150	14.396	0	6.57	18	174.0

Table C-1 Reactor cavity compartment Nodal Description

A. Break Type : DVI(4B) guillotine break
Break Area : 0.065(ft^2)
Break location : Volume number 50

Volume No.	Description	Height (ft)	Free Volume (ft^3)	Initial Conditions			Calculated Peak Press. Diff. (psid)	Design Peak Press. Diff (psid)	Margin (%)
				Temp. (deg F)	Press. (psia)	Humid. (%)			
98	Operation space of NIS:direction of C-HL	14.78	251.8	150	14.396	0	6.56	18	174.4
99	Operation space of NIS:direction of D-HL	14.78	84.4	150	14.396	0	6.57	18	174.0
100	Operation space of NIS:direction of D-CL	14.78	84.4	150	14.396	0	6.62	18	171.9
101	Lower reactor cavity region EL -1'-2" to EL 19'-8.856"	20.90	4691.3	150	14.396	0	6.66	18	170.3
102	Lower reactor cavity region EL -9'-2" to EL -1'-2"	8.00	2722.2	150	14.396	0	6.67	18	169.9
103	RV cooling air supply duct tunnel horizontal passageway	8.00	2500.3	150	14.396	0	6.67	18	169.9
104	RV cooling air supply duct tunnel horizontal passageway	8.00	968.9	150	14.396	0	6.67	18	169.9
105	Core debris catcher	8.00	2038.5	150	14.396	0	6.67	18	169.9
106	RV cooling air supply duct tunnel	35.25	3920.7	150	14.396	0	6.66	18	170.3
107	A-SG compartment	-	50000.0	150	14.396	0	-	-	-
108	B-SG compartment	-	50000.0	150	14.396	0	-	-	-
109	C-SG compartment	-	50000.0	150	14.396	0	-	-	-
110	D-SG compartment	-	50000.0	150	14.396	0	-	-	-

Table C-2 Reactor cavity Compartment Vent Path Description

A. Break Type : DVI(4B) guillotine break
Break Area : 0.065(ft^2)
Break location : Volume number 50

Vent Path No.	Volume No.		Description of Vent Path Flow		Area (ft^2)	Inertia Length (ft)	Hydraulic Diameter (ft)	Friction Length (ft)	Loss Coefficient K			
	From	To	Choked	Unchoked					Turning and Obstruction	Expansion	Contraction	Total
1	V1	V107		X	0.81	15.66	0.695	18.79		1.0	0.0	1.0
2	V2	V107		X	0.81	8.22	0.695	9.86		1.0	0.0	1.0
3	V3	V108		X	0.81	8.22	0.695	9.86		1.0	0.0	1.0
4	V4	V108		X	0.81	14.68	0.695	17.62		1.0	0.0	1.0
5	V5	V109		X	0.81	14.68	0.695	17.62		1.0	0.0	1.0
6	V6	V109		X	0.81	8.22	0.695	9.86		1.0	0.0	1.0
7	V7	V110		X	0.81	8.22	0.695	9.86		1.0	0.0	1.0
8	V8	V110		X	0.81	15.66	0.695	18.79		1.0	0.0	1.0
9	V9	V1		X	0.81	9.13	0.695	10.96		1.0	0.5	1.5
10	V10	V2		X	0.81	5.64	0.695	6.77		1.0	0.5	1.5
11	V11	V3		X	0.81	5.64	0.695	6.77		1.0	0.5	1.5
12	V12	V4		X	0.81	9.13	0.695	10.96		1.0	0.5	1.5
13	V13	V5		X	0.81	9.13	0.695	10.96		1.0	0.5	1.5
14	V14	V6		X	0.81	5.64	0.695	6.77		1.0	0.5	1.5
15	V15	V7		X	0.81	5.64	0.695	6.77		1.0	0.5	1.5
16	V16	V8		X	0.81	9.13	0.695	10.96		1.0	0.5	1.5
17	V9	V10		X	0.37	8.1	0.272	9.72		1.0	0.5	1.5
18	V10	V11		X	0.37	8.1	0.272	9.72		1.0	0.5	1.5
19	V11	V12		X	0.37	8.1	0.272	9.72		1.0	0.5	1.5
20	V12	V13		X	0.37	8.1	0.272	9.72		1.0	0.5	1.5
21	V13	V14		X	0.37	8.1	0.272	9.72		1.0	0.5	1.5
22	V14	V15		X	0.37	8.1	0.272	9.72		1.0	0.5	1.5

Table C-2 Reactor cavity Compartment Vent Path Description

A. Break Type : DVI(4B) guillotine break
Break Area : 0.065(ft^2)
Break location : Volume number 50

Vent Path No.	Volume No.		Description of Vent Path Flow		Area (ft^2)	Inertia Length (ft)	Hydraulic Diameter (ft)	Friction Length (ft)	Loss Coefficient K			
	From	To	Choked	Unchoked					Turning and Obstruction	Expansion	Contraction	Total
23	V15	V16		X	0.37	8.1	0.272	9.72		1.0	0.5	1.5
24	V16	V9		X	0.37	8.1	0.272	9.72		1.0	0.5	1.5
25	V17	V9	X		0.41	2.46	0.103	2.95		0.0	0.0	0.0
26	V18	V10	X		0.41	2.46	0.103	2.95		0.0	0.0	0.0
27	V19	V11	X		0.41	2.46	0.103	2.95		0.0	0.0	0.0
28	V20	V12	X		0.41	2.46	0.103	2.95		0.0	0.0	0.0
29	V21	V13	X		0.41	2.46	0.103	2.95		0.0	0.0	0.0
30	V22	V14		X	0.41	2.46	0.103	2.95		0.0	0.0	0.0
31	V23	V15	X		0.41	2.46	0.103	2.95		0.0	0.0	0.0
32	V24	V16	X		0.41	2.46	0.103	2.95		0.0	0.0	0.0
33	V17	V18		X	0.32	8.48	0.184	10.18		1.0	0.5	1.5
34	V18	V19		X	0.32	8.48	0.184	10.18		1.0	0.5	1.5
35	V19	V20		X	0.32	8.48	0.184	10.18		1.0	0.5	1.5
36	V20	V21		X	0.32	8.48	0.184	10.18		1.0	0.5	1.5
37	V21	V22		X	0.32	8.48	0.184	10.18		1.0	0.5	1.5
38	V22	V23		X	0.32	8.48	0.184	10.18		1.0	0.5	1.5
39	V23	V24		X	0.32	8.48	0.184	10.18		1.0	0.5	1.5
40	V24	V17		X	0.32	8.48	0.184	10.18		1.0	0.5	1.5
41	V25	V17		X	0.67	9.65	0.168	11.58		0.0	0.0	0.0
42	V26	V18		X	0.67	9.16	0.168	10.99		0.0	0.0	0.0
43	V27	V19		X	0.67	9.16	0.168	10.99		0.0	0.0	0.0
44	V28	V20		X	0.67	9.65	0.168	11.58		0.0	0.0	0.0
45	V29	V21		X	0.67	9.65	0.168	11.58		0.0	0.0	0.0

Table C-2 Reactor cavity Compartment Vent Path Description

A. Break Type : DVI(4B) guillotine break
Break Area : 0.065(ft^2)
Break location : Volume number 50

Vent Path No.	Volume No.		Description of Vent Path Flow		Area (ft^2)	Inertia Length (ft)	Hydraulic Diameter (ft)	Friction Length (ft)	Loss Coefficient K			
	From	To	Choked	Unchoked					Turning and Obstruction	Expansion	Contraction	Total
46	V30	V22		X	0.67	9.16	0.168	10.99		0.0	0.0	0.0
47	V31	V23		X	0.67	9.16	0.168	10.99		0.0	0.0	0.0
48	V32	V24		X	0.67	9.65	0.168	11.58		0.0	0.0	0.0
49	V25	V26		X	5.89	8.14	1.914	9.77		1.0	0.5	1.5
50	V26	V27		X	3.69	8	1.281	9.6		1.0	0.5	1.5
51	V27	V28		X	5.89	8.14	1.914	9.77		1.0	0.5	1.5
52	V28	V29		X	3.69	8	1.281	9.6		1.0	0.5	1.5
53	V29	V30		X	5.89	8.14	1.914	9.77		1.0	0.5	1.5
54	V30	V31		X	3.69	8	1.281	9.6		1.0	0.5	1.5
55	V31	V32		X	5.89	8.14	1.914	9.77		1.0	0.5	1.5
56	V32	V25		X	3.69	8	1.281	9.6		1.0	0.5	1.5
57	V41	V17		X	0.20	3.37	0.064	4.04		1.0	0.5	1.5
58	V42	V18	X		0.20	2.94	0.064	3.53		1.0	0.5	1.5
59	V43	V19		X	0.20	3	0.064	3.6		1.0	0.5	1.5
60	V44	V20		X	0.20	3.37	0.064	4.04		1.0	0.5	1.5
61	V45	V21		X	0.20	3.37	0.064	4.04		1.0	0.5	1.5
62	V46	V22		X	0.20	3	0.064	3.6		1.0	0.5	1.5
63	V47	V23		X	0.20	2.94	0.064	3.53		1.0	0.5	1.5
64	V48	V24		X	0.20	3.37	0.064	4.04		1.0	0.5	1.5
65	V49	V25		X	0.30	4.82	0.066	5.78		1.0	0.5	1.5
66	V50	V26	X		0.25	4.68	0.064	5.62		1.0	0.5	1.5
67	V51	V27		X	0.25	4.74	0.064	5.69		1.0	0.5	1.5
68	V52	V28		X	0.30	4.82	0.066	5.78		1.0	0.5	1.5

Table C-2 Reactor cavity Compartment Vent Path Description

A. Break Type : DVI(4B) guillotine break
Break Area : 0.065(ft^2)
Break location : Volume number 50

Vent Path No.	Volume No.		Description of Vent Path Flow		Area (ft^2)	Inertia Length (ft)	Hydraulic Diameter (ft)	Friction Length (ft)	Loss Coefficient K			
	From	To	Choked	Unchoked					Turning and Obstruction	Expansion	Contraction	Total
69	V53	V29		X	0.30	4.82	0.066	5.78		1.0	0.5	1.5
70	V54	V30		X	0.25	4.74	0.064	5.69		1.0	0.5	1.5
71	V55	V31		X	0.25	4.68	0.064	5.62		1.0	0.5	1.5
72	V56	V32		X	0.30	4.82	0.066	5.78		1.0	0.5	1.5
73	V50	V26		X	0.09	10.04	0.063	12.05		1.0	0.5	1.5
74	V51	V27		X	0.09	10.08	0.063	12.1		1.0	0.5	1.5
75	V54	V30		X	0.09	10.08	0.063	12.1		1.0	0.5	1.5
76	V55	V31		X	0.09	10.04	0.063	12.05		1.0	0.5	1.5
77	V49	V33		X	1.40	7.73	0.423	9.28		1.0	0.5	1.5
78	V50	V34	X		1.40	7.43	0.423	8.92		1.0	0.5	1.5
79	V51	V35		X	1.40	7.47	0.423	8.96		1.0	0.5	1.5
80	V52	V36		X	1.40	7.73	0.423	9.28		1.0	0.5	1.5
81	V53	V37		X	1.40	7.73	0.423	9.28		1.0	0.5	1.5
82	V54	V38		X	1.40	7.47	0.423	8.96		1.0	0.5	1.5
83	V55	V39		X	1.40	7.43	0.423	8.92		1.0	0.5	1.5
84	V56	V40		X	1.40	7.73	0.423	9.28		1.0	0.5	1.5
85	V41	V42		X	11.85	10.98	3.422	13.18		1.0	0.5	1.5
86	V42	V43		X	9.21	10.73	3.035	12.88		1.0	0.5	1.5
87	V43	V44		X	12.08	10.99	3.451	13.19		1.0	0.5	1.5
88	V44	V45		X	9.21	10.96	3.035	13.15		1.0	0.5	1.5
89	V45	V46		X	12.08	10.99	3.451	13.19		1.0	0.5	1.5
90	V46	V47		X	9.21	10.73	3.035	12.88		1.0	0.5	1.5
90	V47	V48		X	11.85	10.98	3.422	13.18		1.0	0.5	1.5

Table C-2 Reactor cavity Compartment Vent Path Description

A. Break Type : DVI(4B) guillotine break
Break Area : 0.065(ft^2)
Break location : Volume number 50

Vent Path No.	Volume No.		Description of Vent Path Flow		Area (ft^2)	Inertia Length (ft)	Hydraulic Diameter (ft)	Friction Length (ft)	Loss Coefficient K			
	From	To	Choked	Unchoked					Turning and Obstruction	Expansion	Contraction	Total
92	V48	V41		X	9.21	10.96	3.035	13.15		1.0	0.5	1.5
93	V49	V41		X	26.97	9.86	3.545	11.83		0.0	0.0	0.0
94	V50	V42		X	23.07	9.27	3.277	11.12		0.0	0.0	0.0
95	V51	V43		X	23.46	9.29	3.308	11.15		0.0	0.0	0.0
96	V52	V44		X	27.19	9.88	3.561	11.86		0.0	0.0	0.0
97	V53	V45		X	27.19	9.88	3.561	11.86		0.0	0.0	0.0
98	V54	V46		X	23.46	9.29	3.308	11.15		0.0	0.0	0.0
99	V55	V47		X	23.07	9.27	3.277	11.12		0.0	0.0	0.0
100	V56	V48		X	26.97	9.86	3.545	11.83		0.0	0.0	0.0
101	V49	V50		X	18.56	11.15	3.873	13.38		1.0	0.5	1.5
102	V50	V51	X		12.26	10.87	3.154	13.04		1.0	0.5	1.5
103	V51	V52		X	18.92	11.17	3.917	13.4		1.0	0.5	1.5
104	V52	V53		X	12.26	11.02	3.154	13.22		1.0	0.5	1.5
105	V53	V54		X	18.92	11.17	3.917	13.4		1.0	0.5	1.5
106	V54	V55		X	12.26	10.87	3.154	13.04		1.0	0.5	1.5
107	V55	V56		X	18.56	11.15	3.873	13.38		1.0	0.5	1.5
108	V56	V49		X	12.26	11.02	3.154	13.22		1.0	0.5	1.5
109	V41	V57		X	4.75	8.34	1.089	10.01		1.0	0.5	1.5
110	V42	V58		X	2.66	3.98	0.784	4.78		1.0	0.5	1.5
111	V43	V59		X	2.66	3.99	0.782	4.79		1.0	0.5	1.5
112	V44	V60		X	4.75	8	1.089	9.6		1.0	0.5	1.5
113	V45	V61		X	4.75	8	1.089	9.6		1.0	0.5	1.5
114	V46	V62		X	2.66	3.99	0.782	4.79		1.0	0.5	1.5

Table C-2 Reactor cavity Compartment Vent Path Description

A. Break Type : DVI(4B) guillotine break
Break Area : 0.065(ft^2)
Break location : Volume number 50

Vent Path No.	Volume No.		Description of Vent Path Flow		Area (ft^2)	Inertia Length (ft)	Hydraulic Diameter (ft)	Friction Length (ft)	Loss Coefficient K			
	From	To	Choked	Unchoked					Turning and Obstruction	Expansion	Contraction	Total
115	V47	V63		X	2.66	3.98	0.784	4.78		1.0	0.5	1.5
116	V48	V64		X	4.75	8.34	1.089	10.01		1.0	0.5	1.5
117	V49	V65		X	4.75	8.68	1.089	10.42		1.0	0.5	1.5
118	V50	V66	X		2.66	4.44	0.784	5.33		1.0	0.5	1.5
119	V51	V67		X	2.66	4.43	0.782	5.32		1.0	0.5	1.5
120	V52	V68		X	4.75	8.34	1.089	10.01		1.0	0.5	1.5
121	V53	V69		X	4.75	8.34	1.089	10.01		1.0	0.5	1.5
122	V54	V70		X	2.66	4.43	0.782	5.32		1.0	0.5	1.5
123	V55	V71		X	2.66	4.44	0.784	5.33		1.0	0.5	1.5
124	V56	V72		X	4.75	8.68	1.089	10.42		1.0	0.5	1.5
125	V57	V65		X	9.24	5.68	1.524	6.82		0.0	0.0	0.0
126	V58	V66		X	3.68	5.68	1.382	6.82		0.0	0.0	0.0
127	V59	V67		X	3.58	5.68	1.377	6.82		0.0	0.0	0.0
128	V60	V68		X	8.67	5.68	1.518	6.82		0.0	0.0	0.0
129	V61	V69		X	8.67	5.68	1.518	6.82		0.0	0.0	0.0
130	V62	V70		X	3.58	5.68	1.377	6.82		0.0	0.0	0.0
131	V63	V71		X	3.68	5.68	1.382	6.82		0.0	0.0	0.0
132	V64	V72		X	9.24	5.68	1.524	6.82		0.0	0.0	0.0
133	V49	V73	X		0.82	8.92	0.463	10.7		1.0	0.5	1.5
134	V52	V74	X		0.82	8.57	0.463	10.28		1.0	0.5	1.5
135	V53	V75	X		0.82	8.57	0.463	10.28		1.0	0.5	1.5
136	V56	V76	X		0.82	8.92	0.463	10.7		1.0	0.5	1.5
137	V57	V107	X		3.64	11.3	0.881	13.56		1.0	0.0	1.0

Table C-2 Reactor cavity Compartment Vent Path Description

A. Break Type : DVI(4B) guillotine break
Break Area : 0.065(ft^2)
Break location : Volume number 50

Vent Path No.	Volume No.		Description of Vent Path Flow		Area (ft^2)	Inertia Length (ft)	Hydraulic Diameter (ft)	Friction Length (ft)	Loss Coefficient K			
	From	To	Choked	Unchoked					Turning and Obstruction	Expansion	Contraction	Total
138	V58	V107	X		2.58	4.5	0.767	5.4		1.0	0.0	1.0
139	V59	V108	X		2.59	4.38	0.769	5.26		1.0	0.0	1.0
140	V60	V108	X		3.64	10.62	0.881	12.74		1.0	0.0	1.0
141	V61	V109	X		3.64	10.62	0.881	12.74		1.0	0.0	1.0
142	V62	V109	X		2.59	4.38	0.769	5.26		1.0	0.0	1.0
143	V63	V110	X		2.58	4.5	0.767	5.4		1.0	0.0	1.0
144	V64	V110	X		3.64	11.3	0.881	13.56		1.0	0.0	1.0
145	V65	V107	X		3.64	11.3	0.881	13.56		1.0	0.0	1.0
146	V66	V107	X		2.58	4.5	0.767	5.4		1.0	0.0	1.0
147	V67	V108	X		2.59	4.38	0.769	5.26		1.0	0.0	1.0
148	V68	V108	X		3.64	10.62	0.881	12.74		1.0	0.0	1.0
149	V69	V109	X		3.64	10.62	0.881	12.74		1.0	0.0	1.0
150	V70	V109	X		2.59	4.38	0.769	5.26		1.0	0.0	1.0
151	V71	V110	X		2.58	4.5	0.767	5.4		1.0	0.0	1.0
152	V72	V110	X		3.64	11.3	0.881	13.56		1.0	0.0	1.0
153	V73	V107		X	1.11	6.66	0.525	7.99		1.0	0.5	1.5
154	V74	V108		X	1.11	5.9	0.525	7.08		1.0	0.5	1.5
155	V75	V109		X	1.11	5.9	0.525	7.08		1.0	0.5	1.5
156	V76	V110		X	1.11	6.66	0.525	7.99		1.0	0.5	1.5
157	V25	V77		X	0.88	5.2	0.225	6.24		0.0	0.0	0.0
158	V26	V78		X	0.88	5.2	0.225	6.24		0.0	0.0	0.0
159	V27	V79		X	0.88	5.2	0.225	6.24		0.0	0.0	0.0
160	V28	V80		X	0.88	5.2	0.225	6.24		0.0	0.0	0.0

Table C-2 Reactor cavity Compartment Vent Path Description

A. Break Type : DVI(4B) guillotine break
Break Area : 0.065(ft^2)
Break location : Volume number 50

Vent Path No.	Volume No.		Description of Vent Path Flow		Area (ft^2)	Inertia Length (ft)	Hydraulic Diameter (ft)	Friction Length (ft)	Loss Coefficient K			
	From	To	Choked	Unchoked					Turning and Obstruction	Expansion	Contraction	Total
161	V29	V81		X	0.88	5.2	0.225	6.24		0.0	0.0	0.0
162	V30	V82		X	0.88	5.2	0.225	6.24		0.0	0.0	0.0
163	V31	V83		X	0.88	5.2	0.225	6.24		0.0	0.0	0.0
164	V32	V84		X	0.88	5.2	0.225	6.24		0.0	0.0	0.0
165	V33	V77		X	4.36	4.4	1.968	5.28		1.0	0.5	1.5
166	V34	V78		X	4.36	4.4	1.968	5.28		1.0	0.5	1.5
167	V35	V79		X	4.36	4.4	1.968	5.28		1.0	0.5	1.5
168	V36	V80		X	4.36	4.4	1.968	5.28		1.0	0.5	1.5
169	V37	V81		X	4.36	4.4	1.968	5.28		1.0	0.5	1.5
170	V38	V82		X	4.36	4.4	1.968	5.28		1.0	0.5	1.5
171	V39	V83		X	4.36	4.4	1.968	5.28		1.0	0.5	1.5
172	V40	V84		X	4.36	4.4	1.968	5.28		1.0	0.5	1.5
173	V77	V78		X	1.60	7.62	0.395	9.14		1.0	0.5	1.5
174	V78	V79		X	1.60	7.62	0.395	9.14		1.0	0.5	1.5
175	V79	V80		X	1.60	7.62	0.395	9.14		1.0	0.5	1.5
176	V80	V81		X	1.60	7.62	0.395	9.14		1.0	0.5	1.5
177	V81	V82		X	1.60	7.62	0.395	9.14		1.0	0.5	1.5
178	V82	V83		X	1.60	7.62	0.395	9.14		1.0	0.5	1.5
179	V83	V84		X	1.60	7.62	0.395	9.14		1.0	0.5	1.5
180	V84	V77		X	1.60	7.62	0.395	9.14		1.0	0.5	1.5
181	V77	V85		X	1.56	7.94	0.397	9.53		0.0	0.0	0.0
182	V78	V86		X	1.56	7.94	0.397	9.53		0.0	0.0	0.0
183	V79	V87		X	1.56	7.94	0.397	9.53		0.0	0.0	0.0

Table C-2 Reactor cavity Compartment Vent Path Description

A. Break Type : DVI(4B) guillotine break
Break Area : 0.065(ft^2)
Break location : Volume number 50

Vent Path No.	Volume No.		Description of Vent Path Flow		Area (ft^2)	Inertia Length (ft)	Hydraulic Diameter (ft)	Friction Length (ft)	Loss Coefficient K			
	From	To	Choked	Unchoked					Turning and Obstruction	Expansion	Contraction	Total
184	V80	V88		X	1.56	7.94	0.397	9.53		0.0	0.0	0.0
185	V81	V89		X	1.56	7.94	0.397	9.53		0.0	0.0	0.0
186	V82	V90		X	1.56	7.94	0.397	9.53		0.0	0.0	0.0
187	V83	V91		X	1.56	7.94	0.397	9.53		0.0	0.0	0.0
188	V84	V92		X	1.56	7.94	0.397	9.53		0.0	0.0	0.0
189	V85	V86		X	1.61	7.62	0.396	9.14		1.0	0.5	1.5
190	V86	V87		X	1.61	7.62	0.396	9.14		1.0	0.5	1.5
191	V87	V88		X	1.61	7.62	0.396	9.14		1.0	0.5	1.5
192	V88	V89		X	1.61	7.62	0.396	9.14		1.0	0.5	1.5
193	V89	V90		X	1.61	7.62	0.396	9.14		1.0	0.5	1.5
194	V90	V91		X	1.61	7.62	0.396	9.14		1.0	0.5	1.5
195	V91	V92		X	1.61	7.62	0.396	9.14		1.0	0.5	1.5
196	V92	V85		X	1.61	7.62	0.396	9.14		1.0	0.5	1.5
197	V77	V93		X	0.04	13.89	0.119	16.67		1.0	0.5	1.5
198	V78	V94		X	0.16	13.89	0.164	16.67		1.0	0.5	1.5
199	V79	V95		X	0.04	13.89	0.119	16.67		1.0	0.5	1.5
200	V80	V96		X	0.04	13.89	0.119	16.67		1.0	0.5	1.5
201	V81	V97		X	0.04	13.89	0.119	16.67		1.0	0.5	1.5
202	V82	V98		X	0.16	13.89	0.164	16.67		1.0	0.5	1.5
203	V83	V99		X	0.04	13.89	0.119	16.67		1.0	0.5	1.5
204	V84	V100		X	0.04	13.89	0.119	16.67		1.0	0.5	1.5
205	V85	V93		X	0.08	13.33	0.216	16		1.0	0.5	1.5
206	V86	V94		X	0.32	13.33	0.307	16		1.0	0.5	1.5

Table C-2 Reactor cavity Compartment Vent Path Description

A. Break Type : DVI(4B) guillotine break
Break Area : 0.065(ft^2)
Break location : Volume number 50

Vent Path No.	Volume No.		Description of Vent Path Flow		Area (ft^2)	Inertia Length (ft)	Hydraulic Diameter (ft)	Friction Length (ft)	Loss Coefficient K			
	From	To	Choked	Unchoked					Turning and Obstruction	Expansion	Contraction	Total
207	V87	V95		X	0.08	13.33	0.216	16		1.0	0.5	1.5
207	V88	V96		X	0.08	13.33	0.216	16		1.0	0.5	1.5
209	V89	V97		X	0.08	13.33	0.216	16		1.0	0.5	1.5
210	V90	V98		X	0.32	13.33	0.307	16		1.0	0.5	1.5
211	V91	V99		X	0.08	13.33	0.216	16		1.0	0.5	1.5
212	V92	V100		X	0.08	13.33	0.216	16		1.0	0.5	1.5
213	V85	V101		X	1.56	21.95	0.397	26.34		0.0	0.0	0.0
214	V86	V101		X	1.56	21.95	0.397	26.34		0.0	0.0	0.0
215	V87	V101		X	1.56	21.95	0.397	26.34		0.0	0.0	0.0
216	V88	V101		X	1.56	21.95	0.397	26.34		0.0	0.0	0.0
217	V89	V101		X	1.56	21.95	0.397	26.34		0.0	0.0	0.0
218	V90	V101		X	1.56	21.95	0.397	26.34		0.0	0.0	0.0
219	V91	V101		X	1.56	21.95	0.397	26.34		0.0	0.0	0.0
220	V92	V101		X	1.56	21.95	0.397	26.34		0.0	0.0	0.0
221	V101	V102		X	305.36	9.8	19.717	11.76		0.0	0.0	0.0
222	V102	V103		X	155.64	17.4	11.338	20.88		1.0	0.5	1.5
223	V103	V104		X	171.97	10.35	11.659	12.42		1.0	0.5	1.5
224	V104	V105		X	171.97	8.74	11.659	10.49		1.0	0.5	1.5
225	V104	V106		X	121.11	23.38	8.926	28.06		0.0	0.0	0.0

Table C-3 Mass and Release Rates for Reactor Cavity Compartment Peak Pressure Analyses

A. Break Type : DVI(4B) guillotine break
Break Area : 0.065(ft^2)
Break location : Volume number 50

*Mass Release Rate was doubled from the following value for guillotine break.

Time (s)	Mass Release Rate* (lbm/s)	Enthalpy (BTU/lbm)
0	0	550.129
0.001	1330.97	550.129
0.002	1789.05	552.732
0.003	1846.51	553.128
0.004	1849.08	553.162
0.005	1838.15	553.104
0.006	1838.68	553.123
0.007	1841.12	553.156
0.008	1832.63	553.115
0.009	1829.6	553.109
0.01	1833.31	553.15
0.011	1827.97	553.13
0.012	1821.91	553.104
0.013	1824.38	553.136
0.014	1822.73	553.14
0.015	1816.86	553.116
0.016	1818.64	553.142
0.017	1820.26	553.168
0.018	1813.93	553.14
0.019	1811.25	553.136
0.02	1813.95	553.169
0.021	1810.63	553.161
0.022	1805.45	553.14
0.023	1806.49	553.161
0.024	1805.84	553.17
0.025	1800.66	553.149
0.026	1799.9	553.157
0.027	1801.01	553.179
0.028	1796.66	553.163
0.029	1793.1	553.152
0.03	1793.55	553.168
0.031	1790.86	553.164
0.032	1787.09	553.151
0.033	1787.67	553.168
0.034	1786.25	553.171
0.035	1781.17	553.15
0.036	1780.23	553.155
0.037	1780.44	553.169
0.038	1775.59	553.149
0.039	1772	553.137

Table C-3 Mass and Release Rates for Reactor Cavity Compartment Peak Pressure Analyses

A. Break Type : DVI(4B) guillotine break
Break Area : 0.065(ft^2)
Break location : Volume number 50

*Mass Release Rate was doubled from the following value for guillotine break.

Time (s)	Mass Release Rate* (lbm/s)	Enthalpy (BTU/lbm)
0.04	1772.04	553.149
0.041	1768.79	553.14
0.042	1764.68	553.124
0.043	1765.02	553.138
0.044	1764.39	553.146
0.045	1760.71	553.132
0.046	1759.64	553.137
0.047	1759.62	553.148
0.048	1756.79	553.14
0.049	1754.74	553.138
0.05	1754.12	553.145
0.051	1751.21	553.136
0.052	1748.47	553.129
0.053	1748.43	553.139
0.054	1747.3	553.142
0.055	1744.66	553.135
0.056	1744.1	553.142
0.057	1743.95	553.152
0.058	1741.87	553.148
0.059	1740.68	553.15
0.06	1740.9	553.162
0.061	1739.36	553.162
0.062	1736.87	553.155
0.063	1736.05	553.159
0.064	1735.21	553.164
0.065	1733.03	553.159
0.066	1731.33	553.157
0.067	1730.01	553.158
0.068	1727.55	553.151
0.069	1725.33	553.146
0.07	1724.06	553.146
0.071	1721.89	553.141
0.072	1719.32	553.133
0.073	1718.1	553.134
0.074	1716.84	553.135
0.075	1714.74	553.13
0.076	1713.72	553.132
0.077	1713.16	553.137
0.078	1711.15	553.132
0.079	1709.39	553.129
0.08	1709.02	553.135

Table C-3 Mass and Release Rates for Reactor Cavity Compartment Peak Pressure Analyses

A. Break Type : DVI(4B) guillotine break
Break Area : 0.065(ft^2)
Break location : Volume number 50

*Mass Release Rate was doubled from the following value for guillotine break.

Time (s)	Mass Release Rate* (lbm/s)	Enthalpy (BTU/lbm)
0.081	1707.94	553.136
0.082	1706.05	553.132
0.083	1704.97	553.133
0.084	1703.81	553.134
0.085	1701.91	553.129
0.086	1700.55	553.128
0.087	1699.39	553.129
0.088	1697.37	553.123
0.089	1695.53	553.119
0.09	1694.24	553.118
0.091	1692.5	553.114
0.092	1690.87	553.111
0.093	1690.03	553.113
0.094	1688.89	553.113
0.095	1687.4	553.111
0.096	1686.77	553.114
0.097	1686.48	553.12
0.098	1685.51	553.12
0.099	1684.47	553.121
0.1	1683.83	553.124
0.101	1682.89	553.125
0.102	1681.67	553.124
0.103	1680.67	553.124
0.104	1679.57	553.124
0.105	1678.09	553.121
0.106	1676.7	553.118
0.107	1675.5	553.117
0.108	1674.12	553.115
0.109	1672.75	553.112
0.11	1671.47	553.11
0.111	1669.94	553.107
0.112	1668.41	553.103
0.113	1667.33	553.102
0.114	1666.18	553.101
0.115	1664.59	553.097
0.116	1663.19	553.094
0.117	1662.09	553.093
0.118	1660.73	553.09
0.119	1659.36	553.087
0.12	1658.37	553.086
0.121	1657.29	553.085

Table C-3 Mass and Release Rates for Reactor Cavity Compartment Peak Pressure Analyses

A. Break Type : DVI(4B) guillotine break
Break Area : 0.065(ft^2)
Break location : Volume number 50

*Mass Release Rate was doubled from the following value for guillotine break.

Time (s)	Mass Release Rate* (lbm/s)	Enthalpy (BTU/lbm)
0.122	1656.01	553.083
0.123	1655.03	553.082
0.124	1654.2	553.082
0.125	1653.21	553.082
0.126	1652.31	553.081
0.127	1651.48	553.082
0.128	1650.58	553.081
0.129	1649.89	553.082
0.13	1649.38	553.085
0.131	1648.61	553.085
0.132	1647.75	553.085
0.133	1647.14	553.086
0.134	1646.5	553.087
0.135	1645.67	553.087
0.136	1644.94	553.088
0.137	1644.22	553.088
0.138	1643.24	553.087
0.139	1642.23	553.085
0.14	1641.41	553.085
0.141	1640.61	553.085
0.142	1639.74	553.084
0.143	1638.92	553.084
0.144	1638.16	553.084
0.145	1637.44	553.084
0.146	1636.75	553.084
0.147	1635.97	553.084
0.148	1635.03	553.082
0.149	1634.04	553.08
0.15	1633.06	553.079
0.151	1631.94	553.076
0.152	1630.69	553.072
0.153	1629.46	553.069
0.154	1628.17	553.065
0.155	1626.74	553.06
0.156	1625.41	553.055
0.157	1624.25	553.052
0.158	1623.06	553.048
0.159	1621.82	553.044
0.16	1620.75	553.042
0.161	1619.83	553.04
0.162	1618.99	553.038

Table C-3 Mass and Release Rates for Reactor Cavity Compartment Peak Pressure Analyses

A. Break Type : DVI(4B) guillotine break
Break Area : 0.065(ft^2)
Break location : Volume number 50

*Mass Release Rate was doubled from the following value for guillotine break.

Time (s)	Mass Release Rate* (lbm/s)	Enthalpy (BTU/lbm)
0.163	1618.27	553.038
0.164	1617.64	553.038
0.165	1617.07	553.038
0.166	1616.64	553.039
0.167	1616.3	553.041
0.168	1615.95	553.043
0.169	1615.6	553.045
0.17	1615.26	553.046
0.171	1614.8	553.047
0.172	1614.29	553.048
0.173	1613.84	553.049
0.174	1613.35	553.049
0.175	1612.73	553.049
0.176	1612.09	553.049
0.177	1611.54	553.049
0.178	1610.99	553.049
0.179	1610.44	553.049
0.18	1609.92	553.049
0.181	1609.42	553.049
0.182	1608.95	553.05
0.183	1608.5	553.05
0.184	1608.07	553.051
0.185	1607.61	553.051
0.186	1607.13	553.052
0.187	1606.61	553.052
0.188	1606.07	553.052
0.189	1605.56	553.052
0.19	1605.09	553.052
0.191	1604.55	553.052
0.192	1603.96	553.051
0.193	1603.41	553.051
0.194	1602.92	553.051
0.195	1602.42	553.05
0.196	1601.91	553.05
0.197	1601.45	553.05
0.198	1601.01	553.051
0.199	1600.57	553.051
0.2	1600.16	553.051
0.205	1597.94	553.052
0.21	1595.05	553.047
0.215	1592.18	553.042

Table C-3 Mass and Release Rates for Reactor Cavity Compartment Peak Pressure Analyses

A. Break Type : DVI(4B) guillotine break
Break Area : 0.065(ft^2)
Break location : Volume number 50

*Mass Release Rate was doubled from the following value for guillotine break.

Time (s)	Mass Release Rate* (lbm/s)	Enthalpy (BTU/lbm)
0.22	1589.42	553.037
0.225	1586.54	553.03
0.23	1583.95	553.025
0.235	1582.01	553.024
0.24	1580.11	553.022
0.245	1577.41	553.015
0.25	1574.85	553.008
0.255	1572.85	553.005
0.26	1570.94	553.002
0.265	1569.06	552.998
0.27	1567.32	552.995
0.275	1565.86	552.994
0.28	1564.42	552.992
0.285	1563.06	552.991
0.29	1561.95	552.991
0.295	1560.82	552.99
0.3	1559.55	552.989
0.305	1558.14	552.986
0.31	1556.56	552.982
0.315	1555.12	552.978
0.32	1554.15	552.977
0.325	1553.64	552.979
0.33	1553.16	552.981
0.335	1552.41	552.981
0.34	1551.47	552.98
0.345	1550.41	552.977
0.35	1549.27	552.974
0.355	1548.17	552.971
0.36	1547.08	552.968
0.365	1545.98	552.965
0.37	1544.85	552.961
0.375	1543.76	552.957
0.38	1542.76	552.954
0.385	1541.93	552.952
0.39	1541.29	552.951
0.395	1540.69	552.95
0.4	1540.02	552.948
0.405	1539.34	552.946
0.41	1538.75	552.945
0.415	1538.27	552.945
0.42	1537.86	552.944

Table C-3 Mass and Release Rates for Reactor Cavity Compartment Peak Pressure Analyses

A. Break Type : DVI(4B) guillotine break
Break Area : 0.065(ft^2)
Break location : Volume number 50

*Mass Release Rate was doubled from the following value for guillotine break.

Time (s)	Mass Release Rate* (lbm/s)	Enthalpy (BTU/lbm)
0.425	1537.52	552.944
0.43	1537.22	552.945
0.435	1536.91	552.945
0.44	1536.58	552.945
0.445	1536.25	552.945
0.45	1535.89	552.944
0.455	1535.46	552.943
0.46	1534.96	552.942
0.465	1534.46	552.94
0.47	1534.02	552.939
0.475	1533.67	552.938
0.48	1533.41	552.938
0.485	1533.12	552.937
0.49	1532.71	552.936
0.495	1532.2	552.934
0.5	1531.68	552.932
0.6	1528.52	552.929
0.7	1527.99	552.935
0.8	1528.49	552.944
0.9	1529.99	552.958
1	1531.85	552.974
1.1	1533.38	552.988
1.2	1534.51	552.998
1.3	1535.14	553.005
1.4	1535.15	553.006
1.5	1534.73	553.005
1.6	1533.89	553.001
1.7	1532.59	552.994
1.8	1530.94	552.984
1.9	1529.1	552.974
2	1527.13	552.964
2.1	1525.1	552.954
2.2	1523.09	552.946
2.3	1521.17	552.938
2.4	1519.36	552.932
2.5	1517.7	552.929
2.6	1516.19	552.926
2.7	1514.83	552.926
2.8	1513.59	552.926
2.9	1512.44	552.928
3	1511.35	552.931

Table C-3 Mass and Release Rates for Reactor Cavity Compartment Peak Pressure Analyses

A. Break Type : DVI(4B) guillotine break
Break Area : 0.065(ft^2)
Break location : Volume number 50

*Mass Release Rate was doubled from the following value for guillotine break.

Time (s)	Mass Release Rate* (lbm/s)	Enthalpy (BTU/lbm)
3.1	1510.26	552.933
3.2	1509.17	552.937
3.3	1508.06	552.94
3.4	1506.93	552.943
3.5	1505.78	552.947
3.6	1504.62	552.95
3.7	1503.45	552.954
3.8	1502.25	552.958
3.9	1501.03	552.962
4	1499.86	552.966
4.1	1498.62	552.971
4.2	1497.25	552.975
4.3	1495.93	552.979
4.4	1494.69	552.985
4.5	1493.49	552.991
4.6	1492.32	552.998
4.7	1491.18	553.005
4.8	1490.06	553.013
4.9	1488.95	553.022
5	1487.84	553.032
5.1	1486.74	553.041
5.2	1485.64	553.052
5.3	1484.53	553.063
5.4	1483.41	553.075
5.5	1482.26	553.087
5.6	1481.14	553.1
5.7	1480.02	553.114
5.8	1478.89	553.129
5.9	1477.74	553.144
6	1476.6	553.16
6.1	1475.47	553.178
6.2	1474.35	553.196
6.3	1473.23	553.215
6.4	1472.13	553.235
6.5	1471.02	553.255
6.6	1469.92	553.277
6.7	1468.83	553.3
6.8	1467.73	553.323
6.9	1466.64	553.347
7	1465.55	553.371
7.1	1464.48	553.396

Table C-3 Mass and Release Rates for Reactor Cavity Compartment Peak Pressure Analyses

A. Break Type : DVI(4B) guillotine break
Break Area : 0.065(ft^2)
Break location : Volume number 50

*Mass Release Rate was doubled from the following value for guillotine break.

Time (s)	Mass Release Rate* (lbm/s)	Enthalpy (BTU/lbm)
7.2	1463.41	553.422
7.3	1462.35	553.448
7.4	1461.27	553.475
7.5	1460.19	553.501
7.6	1459.1	553.528
7.7	1458.02	553.555
7.8	1456.93	553.582
7.9	1455.85	553.609
8	1454.76	553.635
8.1	1453.69	553.662
8.2	1452.61	553.688
8.3	1451.55	553.714
8.4	1450.49	553.739
8.5	1449.45	553.764
8.6	1448.41	553.788
8.7	1447.37	553.812
8.8	1446.33	553.835
8.9	1445.3	553.858
9	1444.28	553.879
9.1	1443.25	553.9
9.2	1442.23	553.92
9.3	1441.21	553.939
9.4	1440.16	553.957
9.5	1439.13	553.974
9.6	1438.13	553.99
9.7	1437.13	554.006
9.8	1436.12	554.02
9.9	1435.11	554.034
10	1434.1	554.047

Figure C-1 Nodalization scheme of reactor cavity

Figure C-2 Nodalization scheme of reactor cavity

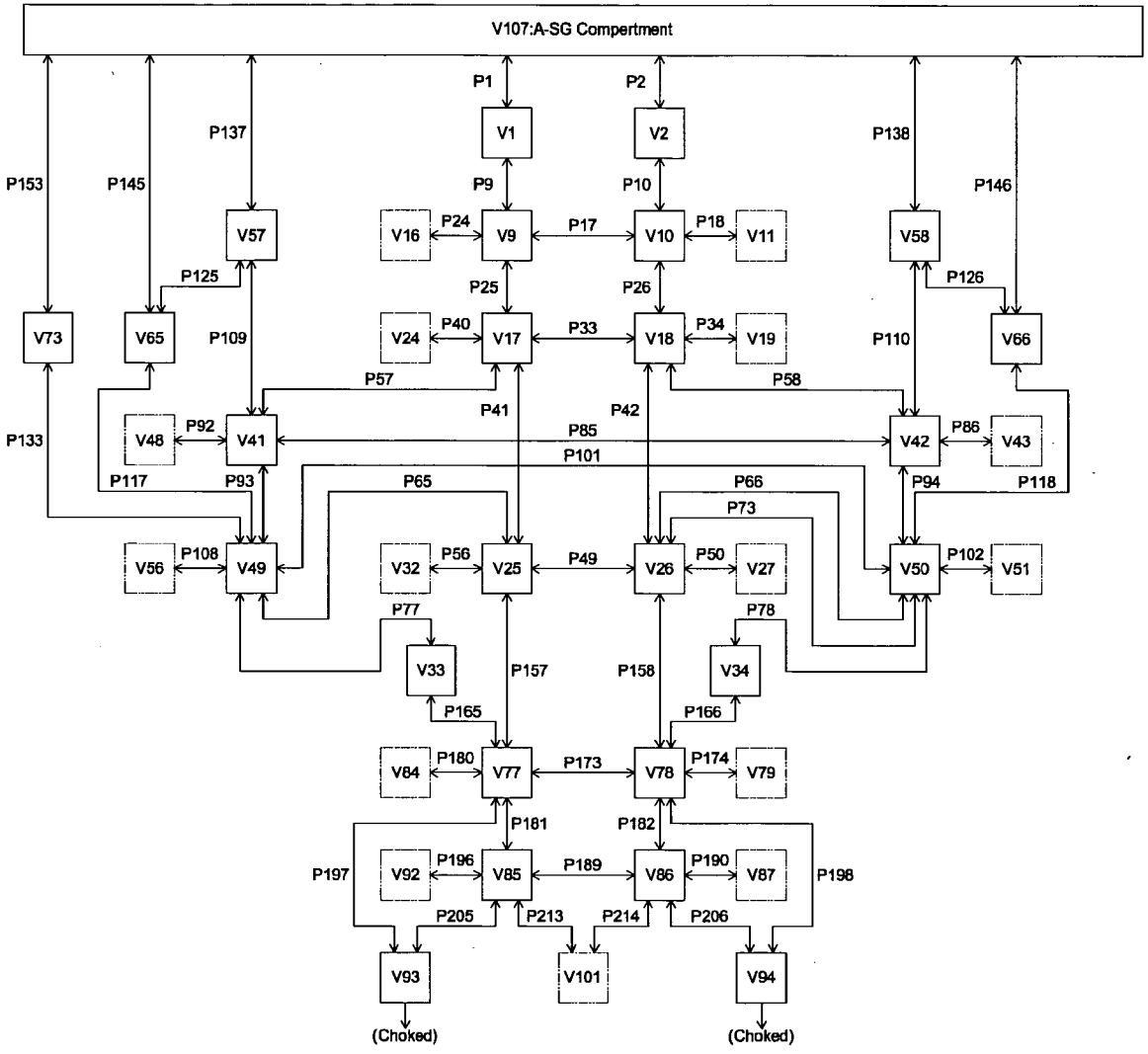

Figure C-3 Nodalization diagram of reactor cavity in A-loop direction

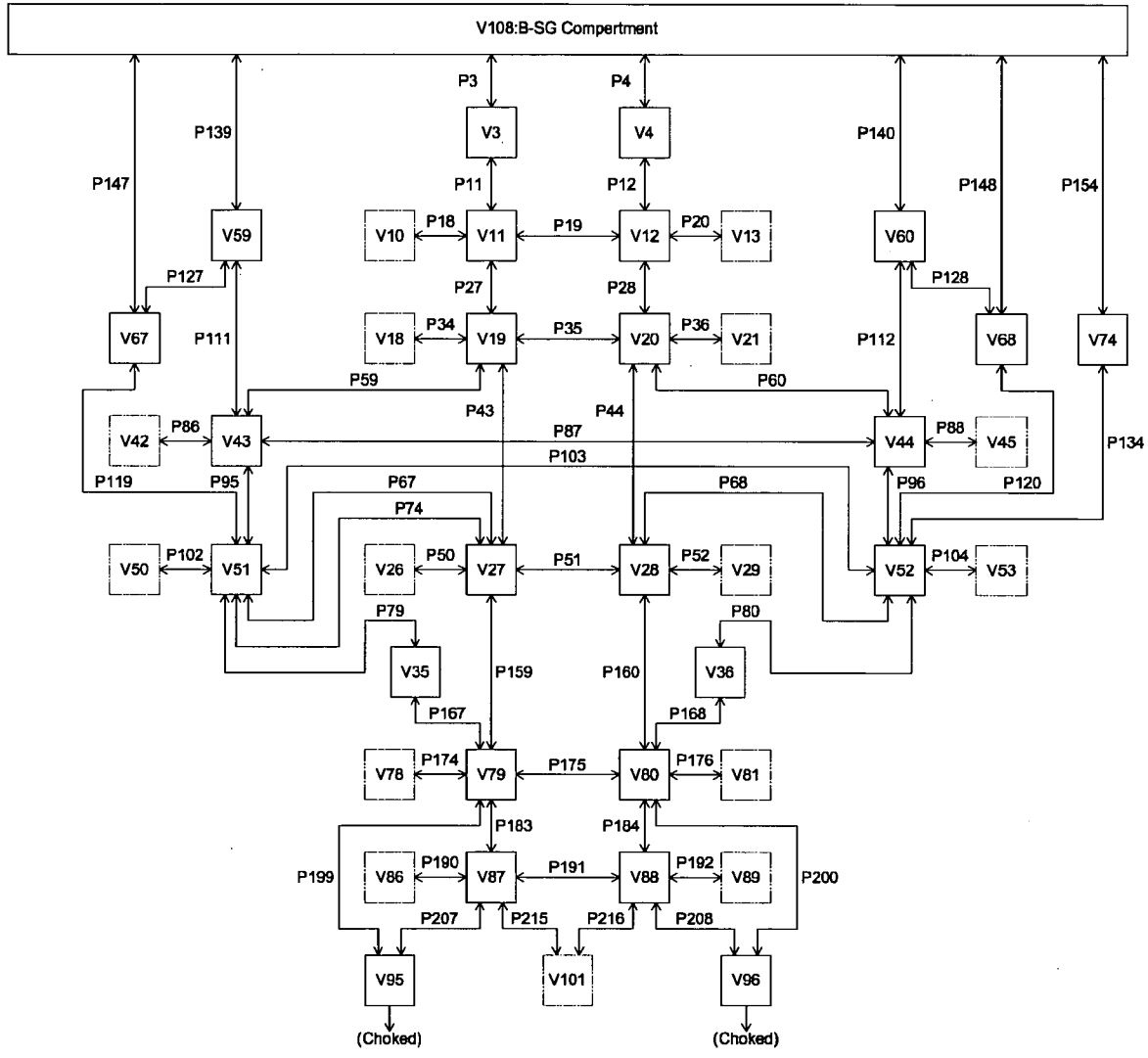

Figure C-4 Nodalization diagram of reactor cavity in B-loop direction

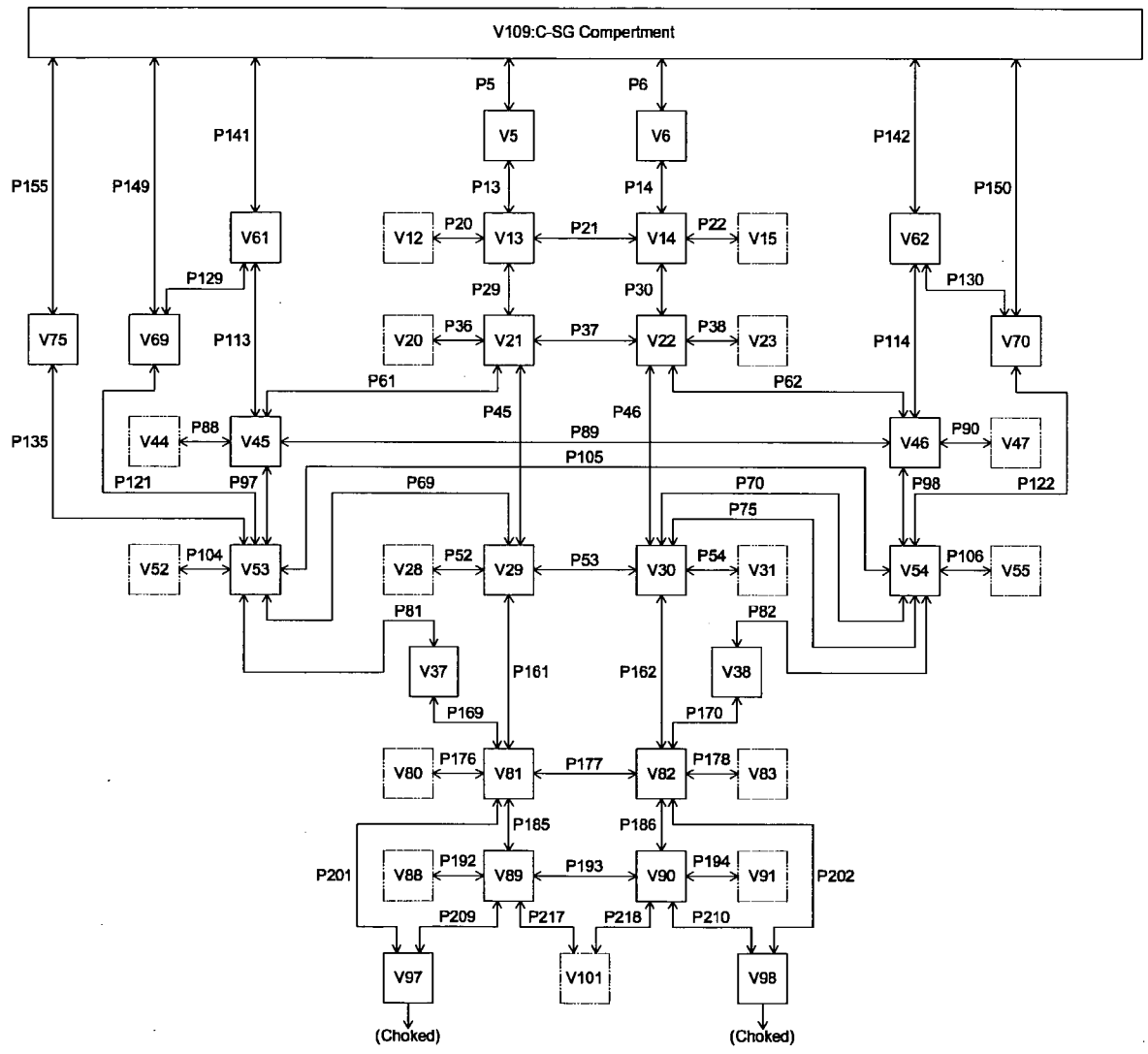

Figure C-5 Nodalization diagram of reactor cavity in C-loop direction

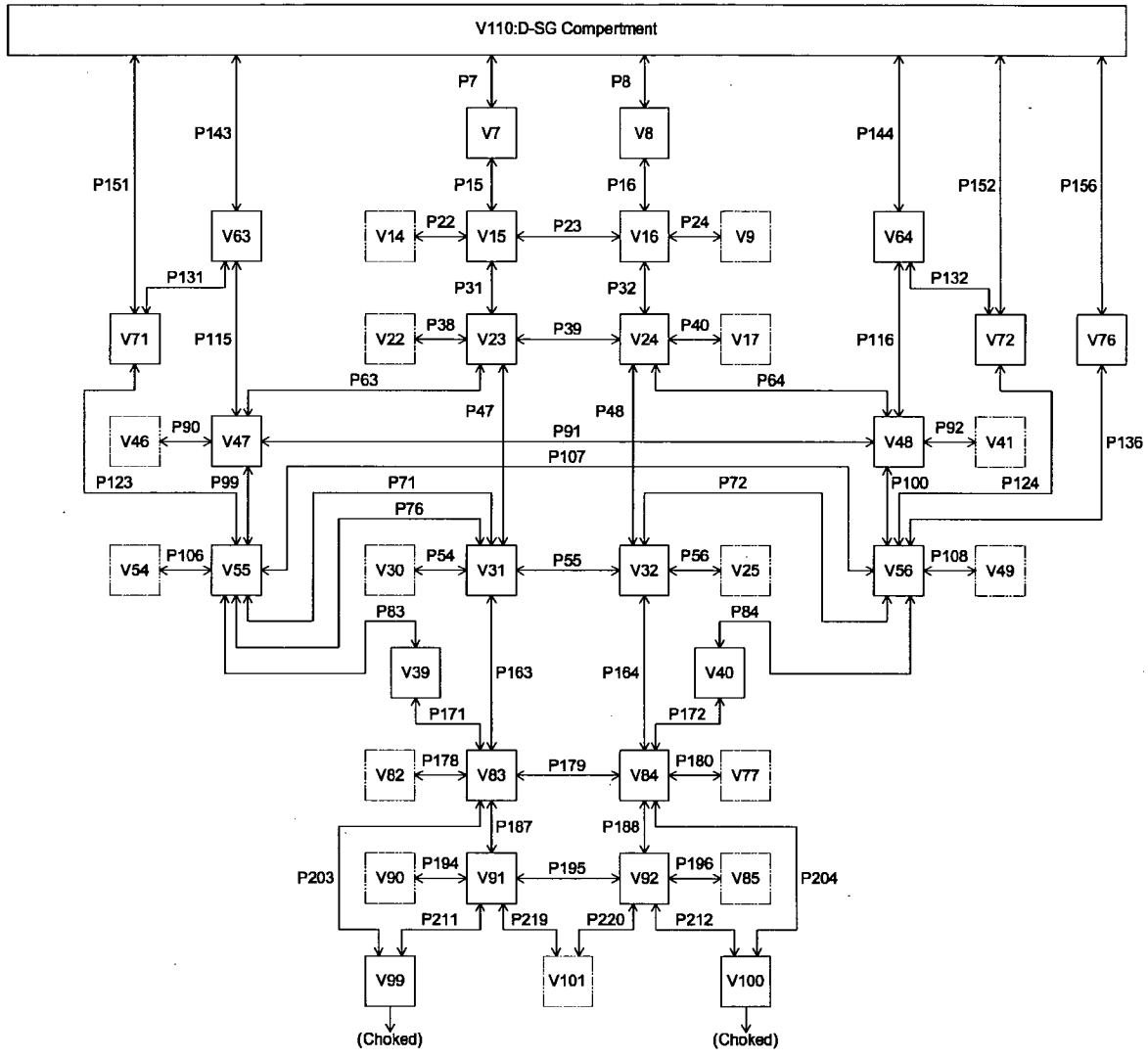

Figure C-6 Nodalization diagram of reactor cavity in D-loop direction

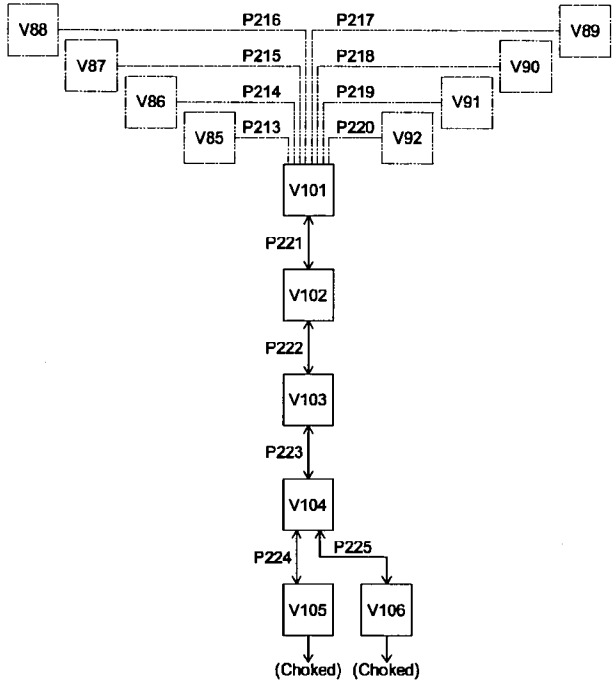

Figure C-7 Nodalization diagram of reactor cavity

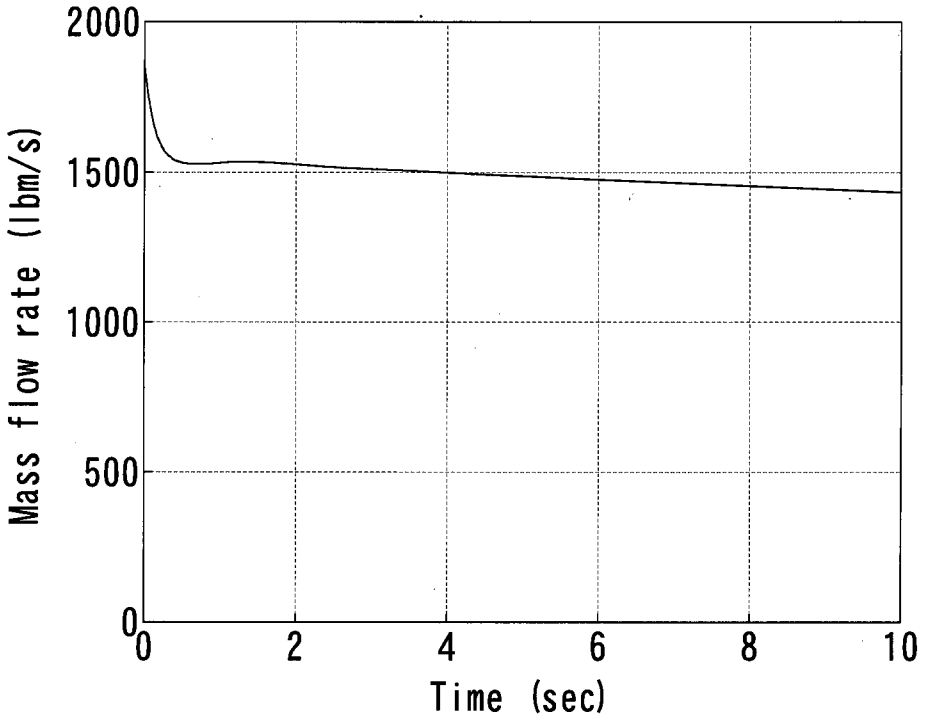

Figure C-8 Short term mass and energy release data for reactor cavity (1/2)

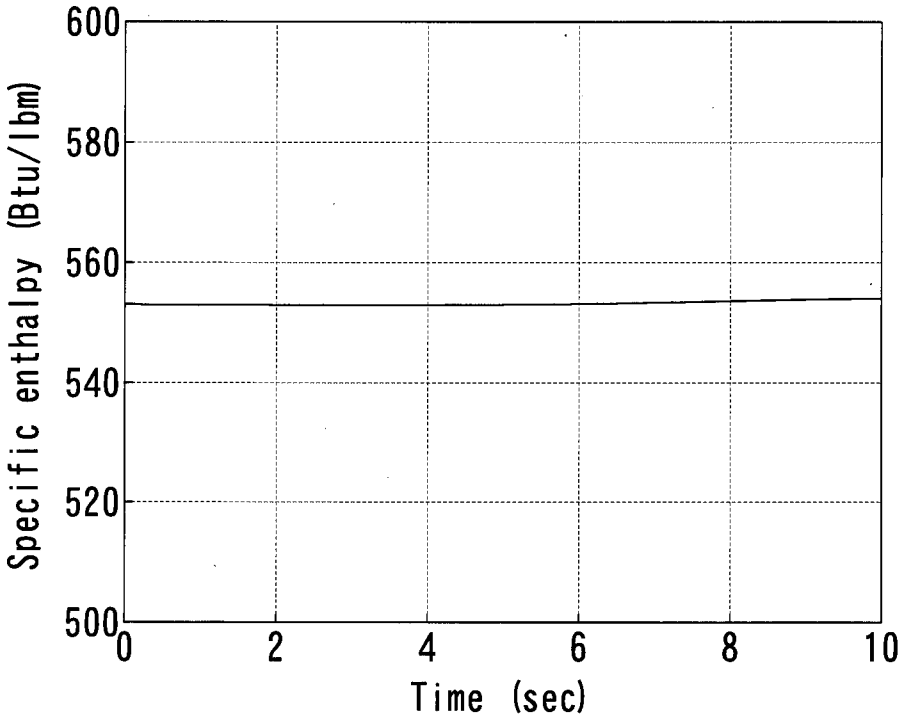

Figure C-9 Short term mass and energy release data for reactor cavity (2/2)

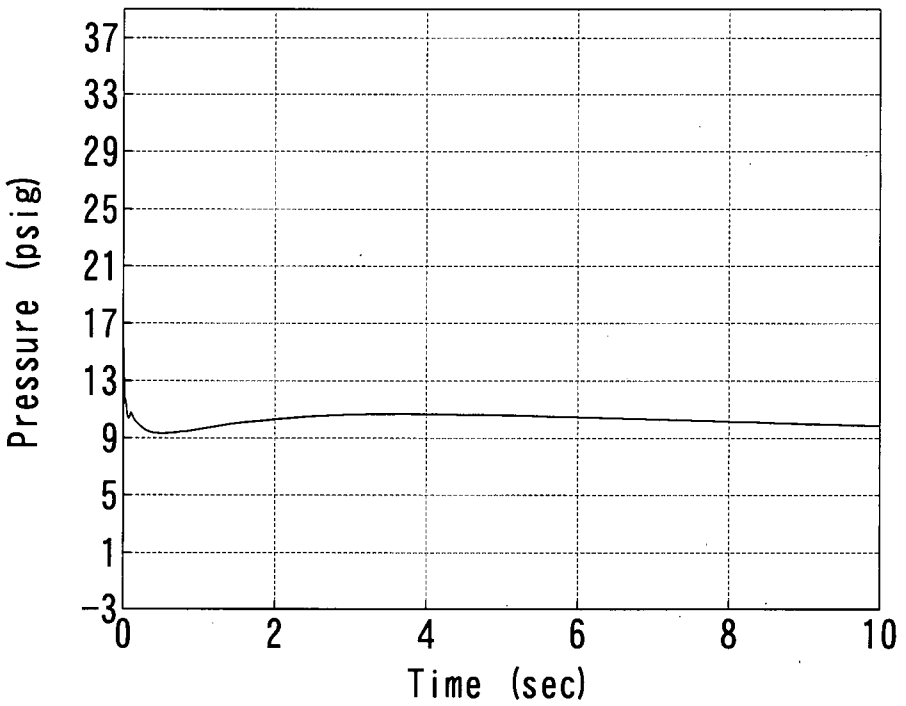

Figure C-10 Pressure transient at the peak pressure node(V50) in reactor cavity analysis