TABLE OF CONTENTS

Section	Title	Page
6.0	**ENGINEERED SAFETY FEATURES**	
6.1	**ENGINEERED SAFETY FEATURE MATERIALS**	**6.1-1**
6.1.1	Metallic Materials	6.1-1
6.1.1.1	Materials Selection and Fabrication	6.1-1
6.1.1.2	Composition, Compatibility, and Stability of Containment and Core Spray Coolants	6.1-2
6.1.2	Organic Materials	6.1-3
6.1.2.1	Electrical Insulation	6.1-3
6.1.2.2	Surface Coatings	6.1-3
6.1.2.3	Ice Condenser Equipment	6.1-4
6.1.2.4	Identification Tags	6.1-4
6.1.2.5	Valves and Instruments within Containment	6.1-4
6.1.2.6	Heating and Ventilating Door Seals	6.1-4
6.1.3	Post-Accident Chemistry	6.1-4
6.1.3.1	Boric Acid, H3BO3	6.1-5
6.1.3.2	Lithium Hydroxide	6.1-5
6.1.3.3	Sodium Tetraborate	6.1-5
6.1.3.4	Final Post-Accident Chemistry	6.1-5
6.1.4	Degree of Compliance with Regulatory Guide 1.54 for Paints and Coatings Inside Containment	6.1-5
6.2	**CONTAINMENT SYSTEMS**	
6.2.1	**Containment Functional Design**	**6.2.1-1**
6.2.1.1	Design Bases	6.2.1-1
6.2.1.1.1	Primary Containment Design Bases	6.2.1-1
6.2.1.2	Primary Containment System Design	6.2.1-3
6.2.1.3	Design Evaluation	6.2.1-3
6.2.1.3.1	Primary Containment Evaluation	6.2.1-3
6.2.1.3.2	General Description of Containment Pressure Analysis	6.2.1-4
6.2.1.3.3	Long-Term Containment Pressure Analysis	6.2.1-4
6.2.1.3.4	Short-Term Blowdown Analysis	6.2.1-8
6.2.1.3.5	Effect of Steam Bypass	6.2.1-17
6.2.1.3.6	Mass and Energy Release Data	6.2.1-20
6.2.1.3.7	Accident Chronology	6.2.1-24
6.2.1.3.8	Energy Balance Tables	6.2.1-24
6.2.1.3.9	Containment Pressure Differentials	6.2.1-24
6.2.1.3.10	Steam Line Break Inside Containment	6.2.1-27
6.2.1.3.11	Maximum Reverse Pressure Differentials	6.2.1-33
6.2.2	**CONTAINMENT HEAT REMOVAL SYSTEMS**	**6.2.2-1**
6.2.2.1	Design Bases	6.2.2-1

TABLE OF CONTENTS

Section	Title	Page
6.2.2.2	System Design	6.2.2-3
6.2.2.3	Design Evaluation	6.2.2-5
6.2.2.4	Testing and Inspections	6.2.2-7
6.2.2.5	Instrumentation Requirements	6.2.2-8
6.2.2.6	Materials	6.2.2-8
6.2.3	**Secondary Containment Functional Design**	**6.2.3-1**
6.2.3.1	Design Bases	6.2.3-1
6.2.3.1.1	Secondary Containment Enclosures	6.2.3-1
6.2.3.1.2	Emergency Gas Treatment System (EGTS)	6.2.3-1
6.2.3.1.3	Auxiliary Building Gas Treatment System (ABGTS)	6.2.3-2
6.2.3.2	System Design	6.2.3-2
6.2.3.2.1	Secondary Containment Enclosures	6.2.3-2
6.2.3.2.2	Emergency Gas Treatment System (EGTS)	6.2.3-7
6.2.3.2.3	Auxiliary Building Gas Treatment System (ABGTS)	6.2.3-10
6.2.3.3	Design Evaluation	6.2.3-12
6.2.3.3.1	Secondary Containment Enclosures	6.2.3-12
6.2.3.3.2	Emergency Gas Treatment System (EGTS)	6.2.3-15
6.2.3.3.3	Auxiliary Building Gas Treatment System (ABGTS)	6.2.3-19
6.2.3.4	Test and Inspections	6.2.3-21
6.2.3.4.1	Emergency Gas Treatment System (EGTS)	6.2.3-21
6.2.3.4.2	Auxiliary Building Gas Treatment System (ABGTS)	6.2.3-22
6.2.3.5	Instrumentation Requirements	6.2.3-23
6.2.3.5.1	Emergency Gas Treatment System (EGTS)	6.2.3-23
6.2.3.5.2	Auxiliary Building Gas Treatment System (ABGTS)	6.2.3-23
6.2.4	**Containment Isolation Systems**	**6.2.4-1**
6.2.4.1	Design Bases	6.2.4-1
6.2.4.2	System Design	6.2.4-4
6.2.4.2.1	Design Requirements	6.2.4-5
6.2.4.2.2	Containment Isolation Operation	6.2.4-5
6.2.4.2.3	Penetration Design	6.2.4-6
6.2.4.3	Design Evaluation	6.2.4-12
6.2.4.3.1	Possible Leakage Paths	6.2.4-14
6.2.4.4	Tests and Inspections	6.2.4-16
6.2.5	**Combustible Gas Control in Containment**	**6.2.5-1**
6.2.5.1	Design Bases	6.2.5-1
6.2.5.2	System Design	6.2.5-2
6.2.5.3	Design Evaluation	6.2.5-5
6.2.5.4	Testing and Inspections	6.2.5-5
6.2.5.5	Instrumentation Application	6.2.5-5
6.2.5.6	Materials	6.2.5-6
6.2.5A	Hydrogen Mitigation System	6.2.5-6

TABLE OF CONTENTS

Section	Title	Page
6.2.5A.1	Design Basis	6.2.5-6
6.2.5A.2	System Description	6.2.5-6
6.2.5A.3	Operation	6.2.5-7
6.2.5A.4	Safety Evaluation	6.2.5-7
6.2.5A.5	Testing	6.2.5-7
6.2.6	**Containment Leakage Testing**	**6.2.6-1**
6.2.6.1	Containment Integrated Leak Rate Test	6.2.6-1
6.2.6.2	Containment Penetration Leakage Rate Test	6.2.6-2
6.2.6.3	Scheduling and Reporting of Periodic Tests	6.2.6-6
6.2.6.4	Special Testing Requirements	6.2.6-6

TABLE OF CONTENTS

Section	Title	Page

THIS PAGE INTENTIONALLY BLANK

LIST OF TABLES

Section	Title
Table 6.1-1	Engineered Safety Feature Materials
Table 6.2.1-1	Structural Heat Sinks
Table 6.2.1-2	Pump Flow Rates Vs. Time
Table 6.2.1-3	Energy Balances
Table 6.2.1-4	Energy Balances
Table 6.2.1-5	Material Property Data
Table 6.2.1-6	TMD Input for Watts Barr
Table 6.2.1-7	TMD Flow Input Data For Watts Bar
Table 6.2.1-8	Calculated Maximum Peak Pressures In Lower Compartment Elements Assuming Unaugmented Flow
Table 6.2.1-9	Calculated Maximum Peak Pressures In The Ice Condenser Compartment Assuming Unaugmented Flow
Table 6.2.1-10	Calculated Maximum Differential Pressures Across The Operating Deck Or Lower Crane Wall Assuming Unaugmented Flow
Table 6.2.1-11	Calculated Maximum Differential Pressures Across The Upper Crane Wall Assuming Unaugmented Flow
Table 6.2.1-12	Sensitivity Studies For D. C. Cook Plant
Table 6.2.1-13	Watts Bar Ice Condenser Design Parameters
Table 6.2.1-14	Allowable Leakage Area For Various Reactor Coolant System Break Sizes
Table 6.2.1-15	Blowdown Data Summary
Table 6.2.1-16a	Blowdown Double-Ended Pump Suction Break
Table 6.2.1-16b	0.6 Double-Ended Pump Suction Guillotine
Table 6.2.1-16d	Double-Ended Hot Leg Guillotine Break
Table 6.2.1-16e	Double-Ended Cold Leg Guillotine Break
Table 6.2.1-17	19 Element W Reflood Model
Table 6.2.1-18	Reflood Data Summary
Table 6.2.1-19a	Mass And Energy Releases Post-Blowdown Deps Guillotine Minimum Safeguards
Table 6.2.1-19b	Mass And Energy Releases Post-Blowdown Double-Ended Pump Suction Guillotine Maximum Safeguards
Table 6.2.1-19d	Mass And Energy Releases 3 Ft2 Pump Suction Split
Table 6.2.1-19e	Mass And Energy Releases Double-Ended Hot Leg Guillotine
Table 6.2.1-19f	Mass And Energy Releases Double-Ended Cold Leg Guillotine
Table 6.2.1-20	Watts Bar Maximum SI Post-Reflood Mass And Energy Release Information
Table 6.2.1-21	Watts Bar Minimum SI Post-Reflood Mass And Energy Release Information
Table 6.2.1-22	Available Energy Between 20.2 Psia And 14.7 Psia
Table 6.2.1-23	Break Mass And Energy Flow From A Double-Ended Cold Leg Guillotine

LIST OF TABLES

Section	Title
Table 6.2.1-24	Break Mass And Energy Flow From A Double-Ended Hot Leg Break
Table 6.2.1-25	Double-Ended Pump Suction LOCA
Table 6.2.1-26a	Watts Bar Four Loop Plant Double-Ended Pump Suction Guillotine, Max. S.I., W/Froth
Table 6.2.1-26b	Watts Bar Four Loop Plant Double-Ended Pump Suction Guillotine, Min. S.I., W/Froth
Table 6.2.1-26c	Watts Bar Four Loop Plant Double-Ended Pump Suction Guillotine, Min. S.I., W/Froth
Table 6.2.1-26d	Watts Bar Four Loop Plant 3 Ft2 Pump Suction
Table 6.2.1-26e	Watts Bar Four Loop Plant Double-Ended Hot Leg Guillotine, Max. S.I
Table 6.2.1-26f	Watts Bar Four Loop Plant Double-Ended Cold Leg Guillotine, Max. S.I
Table 6.2.1-27a	Steam Line Break Blowdown
Table 6.2.1-27b	Steam Generator Enclosure Geometry
Table 6.2.1-27d	Peak Differential Pressure - Steam Generator Enclosure
Table 6.2.1-28	Mass And Energy Release Rates Into Pressurizer Enclosure
Table 6.2.1-29	Pressurizer Geometric Data
Table 6.2.1-29a	Peak Differential Pressure - Pressurizer Enclosure
Table 6.2.1-30	Mass And Energy Release Rates 127 In2 Cold Leg
Table 6.2.1-31	Reactor Cavity Volumes
Table 6.2.1-32	Flow Path Data (Reactor Cavity)
Table 6.2.1-33	Containment Data (Eccs Analysis)
Table 6.2.1-34	Major Characteristics Of Structural Heat Sinks Inside Sequoyah Nuclear Plant Containment - Upper Compartment
Table 6.2.1-35	Major Characteristics Of Structural Heat Sinks Inside Sequoyah Nuclear Plant Containment - Upper Compartment
Table 6.2.1-36	Major Characteristics Of Structural Heat Sinks Inside Sequoyah Nuclear Plant Containment - Lower Compartment
Table 6.2.1-37	Maximum Reverse Pressure Differential Pressure Analysis Base Case
Table 6.2.1-38	Ice Condenser Steam Exit Flow vs. Time vs. Sump Temperature
Table 6.2.1-39	
Table 6.2.1-40	Steam Line Break Cases For Core Integrity
Table 6.2.1-41	Line Break(1) Descriptions For Mass And Energy Releases
Table 6.2.1-42	Small Break Descriptions For Mass And Energy
Table 6.2.1-43	Large Break Analysis - Associated Times
Table 6.2.1-44	Small Break Analysis - Small Split - Associated Times
Table 6.2.2-1	CONTAINMENT SPRAY PUMP/MOTOR DESIGN PARAMETERS
Table 6.2.2-2	Containment Spray Heat Exchanger Design Parameters
Table 6.2.3-1	Dual Containment Characteristics
Table 6.2.3-2	Failure Modes and Effects Analysis Emergency Gas Treatment System

LIST OF TABLES

Section	Title
Table 6.2.3-3	Failure Modes and Effects Analysis for the ABGTS
Table 6.2.3-3	Failure Modes and Effects Analysis for the ABGTS (Continued)
Table 6.2.4-1	WATTS Bar Nuclear Plant Primary Containment and Shield Building Penetration Isolation System Data Sorted by: Containment Penetration Number
Table 6.2.4-2	POSSIBLE BYPASS LEAKAGE PATHS TO THE AUXILIARY BUILDING
Table 6.2.4-3	PREVENTION OF BYPASS LEAKAGE TO THE ATMOSPHERE
Table 6.2.4-4	INSTRUMENT LINES PENETRATING PRIMARY CONTAINMENT
Table 6.2.5-1	Electric Hydrogen Recombiner Typical Parameters
Table 6.2.5-2	Combustible Gas Control System Failure Mode and Effects Analysis
Table 6.2.6-1	Penetrations Subjected To Type B Testing
Table 6.2.6-2a	Containment Isolation Valves Subjected to Type C Testing
Table 6.2.6-2b	Valves Exempted From Type C Leak Testing
Table 6.2.6-3	Containment Vessel Pressure And Leak Test Reactor Building Containment Penetration Status
Table 6.3-1	Emergency Core Cooling System Component Parameters
Table 6.3-2	Materials Employed For Emergency Core Cooling System Components
Table 6.3-3	Sequence Of Change-Over Operation, Injection To Recirculation
Table 6.3-3a	EVALUATION OF TIME SEQUENCE ASSOCIATED WITH CHANGEOVER OPERATION FROM INJECTION TO RECIRCULATION
Table 6.3-4	NORMAL OPERATING STATUS OF EMERGENCY CORE COOLING SYSTEM COMPONENTS FOR CORE COOLING
Table 6.3-5	EMERGENCY CORE COOLING SYSTEM SHARED FUNCTIONS EVALUATION
Table 6.3-6	Maximum Recirculation Loop Leakage External To Containment
Table 6.3-7	DELETED BY AMENDMENT 85
Table 6.3-8	Failure Modes And Effects Analysis For Active Failures For The Safety Injection System
Table 6.3-9	Failure Modes And Effects Analysis For The Safety Injection System (Passive Failures Recirc. Mode)
Table 6.3-10	Principal Eccs Valve Positions
Table 6.3-11	Normalized Decay Heat
Table 6.4-1	Air Leakage (Exfiltration) Paths In The Watts Bar MCRHS Area Control Room
Table 6.4-2	Air Leakage (Infiltration) Paths In The Watts Bar Mcrhs Area Control Room
Table 6.5-1	Regulatory Guide 1.52, Rev. 2, Section Applicability For The Emergency Gas Treatment System
Table 6.5-2	Regulatory Guide 1.52, Rev. 2, Section Applicability For The Auxiliary Building Gas Treatment System
Table 6.5-3	Regulatory Guide 1.52, Rev.2, Section Applicability

LIST OF TABLES

Section	Title
	For The Reactor Building Purge Ventilation System
Table 6.5-4	Regulatory Guide 1.52, Rev. 2, Section Applicability For The Main Control Room Air Cleanup Subsystem
Table 6.5-5	ESF Air Cleanup Unit Data
Table 6.5-6	Deleted in FSAR Amendment 65
Table 6.5-7	Primary Containment Operation Following A DBA
Table 6.5-8	Secondary Containment Operation Following A DBA
Table 6.7-1	Wall Panel Design Loads(1)
Table 6.7-2	Ice Basket Load Summary Minimum Test Loads
Table 6.7-3	Summary Of Stresses In Basket Due To Design Loads
Table 6.7-4	Ice Basket Material Minimum Yield Stress
Table 6.7-5	Allowable Stress Limits (D + Obe) For Ice Basket Materials
Table 6.7-6	Allowable Stress Limits (D + Sse), (D + Dba) For Ice Basket Materials
Table 6.7-7	Allowable Stress Limits (D + Sse + Dba) For Ice Basket Materials
Table 6.7-8	Ice Basket Clevis Pin Stress Summary
Table 6.7-9	Ice Basket Mounting Bracket Assembly Stress Summary
Table 6.7-10	Ice Basket Plate Stress Summary
Table 6.7-11	Ice Basket V-Bolt Stress Summary
Table 6.7-12	Ice Basket - Basket End Stress Summary
Table 6.7-13	Ice Bucket Coupling Screw Stress Summary3 Inch Elevation(1)
Table 6.7-14	Ice Bucket Coupling Screw Stress Summary12 Foot Elevation(1)
Table 6.7-15	Ice Basket Coupling Screw Stress Summary 24 Foot Elevation(1)
Table 6.7-16	Ice Bucket Coupling Screw Stress Summary 36 Foot Elevation(1)
Table 6.7-17	Crane And Rail Assembly Design Loads
Table 6.7-18	Refrigeration System Parameters
Table 6.7-18	Refrigeration System Parameters Continued
Table 6.7-19	Lower Inlet Door Design Parameters And Loads
Table 6.7-20	Design Loads And Parameters Top Deck
Table 6.7-21	Summary Of Results Upper Blanket Door Structural Analysis - Loca
Table 6.7-22	Design Loads And Parameters Intermediate Deck
Table 6.7-23	Summary Of Waltz Mill Tests
Table 6.7-24	Ice Condenser Rtds
Table 6.7-25	Ice Condenser Allowable Limits (1)
Table 6.7-26	Selection Of Structural Steels In Relation To Prevention of Non-Ductile Fracture Of Ice Condenser Components
Table 6.7-27	Summary Of Watts Bar Loads - Tangential Case Obtained Using The Two-Mass Dynamic Model
Table 6.7-28	Summary Of Watts Bar Loads - Radial Case Obtained Using The Two-Mass Dynamic Model
Table 6.7-29	Summary Of Load Results Of Five Non-Linear Dynamic Models
Table 6.7-30	Summary Of Parameters Used In The Seismic Analysis

LIST OF FIGURES

Section	Title
Figure 6.1-1	Containment Sump pH Versus Time
Figure 6.2.1-1	Pressure vs. Time
Figure 6.2.1-2	Temperature VS. Time
Figure 6.2.1-3	Active and Inactive Sump Temperature Transients
Figure 6.2.1-4	Ice Melt Transient
Figure 6.2.1-4a	Ice Mass vs. Pressure
Figure 6.2.1-5	Plan at Equiment Rooms Elevation
Figure 6.2.1-6	Containment Section View
Figure 6.2.1-7	Plan View at Ice Condenser Elevation Ice Condenser Compartments
Figure 6.2.1-8	Layout of Containment Shell
Figure 6.2.1-9	TMD Code Network
Figure 6.2.1-10	Upper and Lower Compartment Pressure Transient for Worst Case Break Compartment (Element 1) Having a DEHL Break
Figure 6.2.1-11	Upper and Lower Compartment Pressure Transient for Worst Case Break Compartment (Element 1) Having a DECL Break.
Figure 6.2.1-12	Illustration of Choked Flow Characteristics
Figure 6.2.1-13	Sensitivity of Peak Pressure to Air Comrression Ratio
Figure 6.2.1-14	Steam Concentration in a Vertical Distribution Channel
Figure 6.2.1-15	Peak Comnression Pressure Versus Compression Ratio
Figure 6.2.1-16	Peak Compartment Pressure versus Blowdown Rate
Figure 6.2.1-17	Sensitivity of Peak Compression Pressure to Deck Bypass
Figure 6.2.1-18	Pressure Increase versus Deck Area from Deck Leakage Tests
Figure 6.2.1-19	Energy Release at Time of Compression Peak Pressure From Full-Scale Section Tests with 1-Foot Diameter Baskets
Figure 6.2.1-20	Pressure Increase versus Deck Area from Deck Leakage Tests
Figure 6.2.1-21	**Coolant Temperature at Core Inlet**
Figure 6.2.1-22	Core Reflooding Rate - V_{in}
Figure 6.2.1-23	Carryover Fraction - F_{out}
Figure 6.2.1-24	Fraction of Flow through Broken Loop.
Figure 6.2.1-25	Post-Blowdown Downcomer and Core Water Height.
Figure 6.2.1-26	Steam Generator Heat Content.
Figure 6.2.1-27	Containment Model Schematic.
Figure 6.2.1-28	Reactor Cavity TMD Network.
Figure 6.2.1-29	Reactor Vessel Annulus
Figure 6.2.1-30	127 Square Inch Cold Leg Break (Reactor Cavity Analysis)
Figure 6.2.1-31	127 Square Inch Cold Leg Break (Reactor Cavity Analysis)
Figure 6.2.1-32	127 Square Inch Cold Leg Break (Reactor Cavity Analysis)
Figure 6.2.1-33	127 Square Inch Cold Leg Break (Reactor Cavity Analysis)
Figure 6.2.1-34	127 Square Inch Cold Leg Break (Reactor Cavity Analysis)
Figure 6.2.1-35	127 Square Inch Cold Leg Break (Reactor Cavity Analysis)
Figure 6.2.1-36	127 Square Inch Cold Leg Break (Reactor Cavity Analysis)
Figure 6.2.1-37	127 Square Inch Cold Leg Break (Reactor Cavity Analysis)
Figure 6.2.1-38	127 Square Inch Cold Leg Break (Reactor Cavity Analysis)
Figure 6.2.1-39	127 Square Inch Cold Leg Break (Reactor Cavity Analysis)

LIST OF FIGURES

Section	Title
Figure 6.2.1-40	127 Square Inch Cold Leg Break (Reactor Cavity Analysis)
Figure 6.2.1-41	127 Square Inch Cold Leg Break (Reactor Cavity Analysis)
Figure 6.2.1-42	127 Square Inch Cold Leg Break (Reactor Cavity Analysis)
Figure 6.2.1-43	127 Square Inch Cold Leg Break (Reactor Cavity Analysis)
Figure 6.2.1-44	127 Square Inch Cold Leg Break (Reactor Cavity Analysis)
Figure 6.2.1-45	127 Square Inch Cold Leg Break (Reactor Cavity Analysis)
Figure 6.2.1-46	127 Square Inch Cold Leg Break (Reactor Cavity Analysis)
Figure 6.2.1-47	127 Square Inch Cold Leg Break (Reactor Cavity Analysis)
Figure 6.2.1-48	127 Square Inch Cold Leg Break (Reactor Cavity Analysis)
Figure 6.2.1-49	127 Square Inch Cold Leg Break (Reactor Cavity Analysis)
Figure 6.2.1-50	127 Square Inch Cold Leg Break (Reactor Cavity Analysis)
Figure 6.2.1-51	127 Square Inch Cold Leg Break (Reactor Cavity Analysis)
Figure 6.2.1-52	127 Square Inch Cold Leg Break (Reactor Cavity Analysis)
Figure 6.2.1-53	127 Square Inch Cold Leg Break (Reactor Cavity Analysis)
Figure 6.2.1-54	127 Square Inch Cold Leg Break (Reactor Cavity AnalysIS)
Figure 6.2.1-55	127 Square Inch Cold Leg Break (Reactor Cavity Analysis)
Figure 6.2.1-56	127 Square Inch Cold Leg Break (Reactor Cavity Analysis)
Figure 6.2.1-57	127 Square Inch Cold Leg Break (Reactor Cavity Analysis)
Figure 6.2.1-58	127 Square Inch Cold Leg Break (Reactor Cavity Analysis)
Figure 6.2.1-59	127 Square Inch Cold Leg Break (Reactor Cavity Analysis)
Figure 6.2.1-60	127 Square Inch Cold Leg Break (Reactor Cavity Analysis)
Figure 6.2.1-61	127 Square Inch Cold Leg Break (Reactor Cavity Analysis)
Figure 6.2.1-62	127 Square Inch Cold Leg Break (Reactor Cavity Analysis)
Figure 6.2.1-63	127 Square Inch Cold Leg Break (Reactor Cavity Analysis)
Figure 6.2.1-64	127 Square Inch Cold Leg Break (Reactor Cavity Analysis)
Figure 6.2.1-65	127 Square Inch Cold Leg Break (Reactor Cavity Analysis)
Figure 6.2.1-66	127 Square Inch Cold Leg Break (Reactor Cavity Analysis)
Figure 6.2.1-67	127 Square Inch Cold Leg Break (Reactor Cavity Analysis)
Figure 6.2.1-68	127 Square Inch Cold Leg Break Reactor Cavity Analysis)
Figure 6.2.1-69	Compartment Temperature 1.4ft^2/Loop, 102% Power FCV Failure
Figure 6.2.1-70	Lower Compartment Pressure 1.4 Ft2 Loop, 102% Power FCV Failure
Figure 6.2.1-71	Compartment Temperature 0.35 Ft^2 Split, 30% Power AFW Runout
Figure 6.2.1-72	Lower Compartment Pressure 0.35 Ft^2 Split, 30% Power Afw Runout
Figure 6.2.1-73	Compartment Temperature 0.6 Ft^2 Split, 30% Power AFW Runout
Figure 6.2.1-74	Lower Compartment Pressure 0.6 Ft^2 Split, 30% Power AFW Fail
Figure 6.2.1-75	
Figure 6.2.1-76	
Figure 6.2.1-77	
Figure 6.2.1-78	
Figure 6.2.1-79	
Figure 6.2.1-80	
Figure 6.2.1-81	Steam Generator Enclosure Nodalization
Figure 6.2.1-82	Flow Paths For TMD Steam Generator Enclosure Short-term Pressure Analysis

LIST OF FIGURES

Section	Title
Figure 6.2.1-83	Pressure Transient Between Break Element And Upper Compartment (Steam Generator Enclosure Analysis)
Figure 6.2.1-84	Differential Pressure Transient Across The Steam Generator Vessel (Steam Generator Enclosure Analysis)
Figure 6.2.1-85	Differential Pressure Transient Cross The Steam Generator Vessel (Steam Generator Enclosure Analysis)
Figure 6.2.1-86	Pressure Versus Time For The Break Element (Steam Generator Enclosure Analysis)
Figure 6.2.1-86a	Upper Compartment Pressure Versus Time (Steam Generator Enclosure Analysis)
Figure 6.2.1-87	Nodalization Pressure Enclosure Analysis
Figure 6.2.1-88	Pressure Transient Between Break Element And Upper Compartment (Pressurizer Enclosure Analysis)
Figure 6.2.1-89	Pressure Differential Across The Pressurizer Vessel (Pressurizer Enclosure Analysis)
Figure 6.2.1-90	Pressure Differential Across The Pressurizer Vessel (Pressurizer Enclosure Analysis)
Figure 6.2.1-91	Pressure Differential Across The Pressurizer Vessel (Pressurizer Enclosure Analysis)
Figure 6.2.1-92	Pressure Versus Time For The Break Element (Pressurizer Enclosure Analysis)
Figure 6.2.2-1	Powerhouse Units 1 & 2 Mechanical Flow Diagram Containment Spray System
Figure 6.2.2-2	Containment Spray Pump Performance Curves
Figure 6.2.2-3	Reactor Bldgs. Units 1 & 2 Mechanical Containment Spray System Piping Plan of Spray Patterns From C.S. Loop Header A
Figure 6.2.2-4	Powerhouse-Auxiliary & Reactor Bldgs Units 1 & 2 Mechanical Containment Spray System Piping
Figure 6.2.2-5	Reactor Blogs. Units 1 & 2 Mechanical Containment Spray System Piping Plan of Spray Patterns From C.S. Loop Header B
Figure 6.2.2-6	Reactor Bldgs. Units 1 & 2 Mechanical Containment Spray System Piping Section of Spray Patterns From C.S. Loop Header B
Figure 6.2.3-1	Typical Mechanical Penetration Seaks
Figure 6.2.3-2	Typical Purge Penetration Arrangement
Figure 6.2.3-3	Typical Electrical Penetrations
Figure 6.2.3-4	Auxiliary Building Isolation Barrier
Figure 6.2.3-5	Auxiliary Building Isolation Barrier
Figure 6.2.3-6	Auxiliary Building Isolation Barrier
Figure 6.2.3-7	Auxiliary Building Isolation Barrier
Figure 6.2.3-8	Auxiliary Building Isolation Barrier
Figure 6.2.3-9	Auxiliary Building Isolation Barrier
Figure 6.2.3-10	Auxiliary Building Isolation Barrier
Figure 6.2.3-11	Reactor Building - Units 1 & 2 Flow Diagram - Heating and Ventilation

LIST OF FIGURES

Section	Title
	Air Flow
Figure 6.2.3-12	Powerhouse Units 1 & 2 Electrical Logic Diagram - Emergency Gas Treatment System
Figure 6.2.3-13	Powerhouse Units 1 & 2 Electrical Logic Diagram - Emergency Gas Treatment
Figure 6.2.3-14	Powerhouse Unit 1 Electrical Logic Diagram -Emergency Gas Treatment
Figure 6.2.3-15	Powerhouse Units 1 & 2 Electrical Control Diagram - Emergency Gas Treatment System
Figure 6.2.3-15-SH-A	Powerhouse Unit 2 Electrical Control Diagram - Emergency Gas Treatment
Figure 6.2.3-16	Powerhouse Units 1 & 2 Auxiliary Building -Flow Diagram -Heating &Ventilating Air Flow
Figure 6.2.3-17	Post-Accident Annulus Pressure and Reactor Unit Vent Flow Rate Transients
Figure 6.2.3-18	Reactor Building Units 1 & 2 Mechanical Heating and Ventilating
Figure 6.2.3-19	Reactor Building Units 1 & 2 Mechanical Heating and Ventilating
Figure 6.2.4-1	Type 1, Main Stearn X-l3A, X-l3B, X-l3C, X-13D
Figure 6.2.4-2	Type II, Feedwater X-12A, X-l2B, X-12C, X-12D
Figure 6.2.4-3	Type III, Residual Heat Removal Pump Return X-17, Pump Supply X-I07
Figure 6.2.4-4	Type IV and V (Type IV Socket Weld Ends, Type V Butt Weld Ends)
Figure 6.2.4-5	Type VI and VII (Type VI for Socket Weld SS Process Lines, Type VII for Butt Weld SS Process Lines
Figure 6.2.4-6	Type VIII, for Butt Weld C.S. Process Lines
Figure 6.2.4-7	Type IX, for SS Process Lines
Figure 6.2.4-8	Type X, Instrument Penetrations
Figure 6.2.4-9	Type XII, Emergency Sump
Figure 6.2.4-10	Type XI, Emergency Sump
Figure 6.2.4-11	Type XIII, Ventilation Duct Penetration
Figure 6.2.4-12	Type XIV, Equipment Hatch
Figure 6.2.4-13	Type XV, Personnel Access
Figure 6.2.4-14	Type XVI, Fuel Transfer Tube
Figure 6.2.4-15	Type XVII, Thimble Renewal Line
Figure 6.2.4-16	Type XVIII, Ice Blowing Line
Figure 6.2.4-17	Type XIX, Electrical Penetration
Figure 6.2.4-17A	Type XX Feedwater Bypass Penetrations X-8A, X-8B, X-8C, X-8D
Figure 6.2.4-17B	Type XXI, Upper And Lower Cont ERCW Supply And Return CCW From Excess Letdown Heat Exchanger and from Pump Odolers
Figure 6.2.4-17C	Type XXII Multi Line Penetration X-39
Figure 6.2.4-17D	Type XXIII Instrument Room Chilled H20 Supply and Return
Figure 6.2.4-17E	Type XXIV UHI X-l08, X·109
Figure 6.2.4-18	Mechanical Containment Penetrations
Figure 6.2.4-19	Powerhouse Reactor Unit 1 & 2 Mechanical Sleeves-Shield Building

LIST OF FIGURES

Section	Title
Figure 6.2.4-20	Schematic Diagram of Leakage Paths
Figure 6.2.4-21	Electrical Logic Diagram Containment Isolation
Figure 6.2.4-22A	through 6.2.4-22II Deleted by Amendment 65
Figure 6.2.4-23	Ice Blowing and Negative Return Lines - Blind Flange Details
Figure 6.2.5-1	Electric Hydrogen Recombiner
Figure 6.2.5-2	De1eted By Amendment 62
Figure 6.2.5-3	Powerhouse Reactor Building Units 1 & 2 - Mechanical Heating, Ventilating and Air Conditioning
Figure 6.2.5-4	Powerhouse Reactor Building Units 1 & 2 Reactor Building - Mechanical Heating, Ventilating and Air Conditioning
Figure 6.2.5-5	Powerhouse Reactor Building Units 1 & 2 - Mechanical Heating, Ventilating and Air Conditioning
Figure 6.2.5-6	Function Flow Block Diagram - Containment Gas Monitor Subsystem
Figure 6.2.5-7	Hydrogen Volume Percent in Containment - NRC Basis - No Recombiner - Recombiner Start at 24 Hrs.
Figure 6.2.5-7a	Hydrogen Volume Percent in Conntainment - NRC Basis - No Recombiner - Recombiner Start at 3 Volume Percent
Figure 6.2.5-A-1	Igniter Locations - Lower Compartment and Dead Ended Compartments
Figure 6.2.5-A-2	Igniter Locations - Lower Compartments
Figure 6.2.5-A-3	Igniter Locations - Upper Plenum and Upper Compartments
Figure 6.2.5-A-4	Igniter Locations - Dome
Figure 6.2.5-A-5	Igniter Locations - Elevation
Figure 6.3-1-1	Powerhouse Unit 1 Safety Injection System - Flow Diagram
Figure 6.3-1-2	Powerhouse Unit 1 & 2 Electrical Control Diagram - Safety Injection System
Figure 6.3-1-2-SH-A	Powerhouse Unit 1 Electrical Control Diagram - Safety Injection System
Figure 6.3-1-3	Powerhouse Unit 1 Electrical Control Diagram Safety Injection
Figure 6.3-1-3-SH-A	Powerhouse Unit 2 Electrical Control Diagram - Safety Injection
Figure 6.3-1-3-SH-B	Powerhouse Unit 1 Electrical Control Diagram - Safety Injection
Figure 6.3-2	Performance Curves For The Residual Heat Removal Pumps
Figure 6.3-3	Performance Curves For The Safety Injection Pumps
Figure 6.3-4	Performance Curves For The Charging Pumps
Figure 6.3-5	Sheets 1 and 2, deleted by Amendment 63
Figure 6.3-6	Containment Sump
Figure 6.5-1	Ice Condenser
Figure 6.7-1	Isometric of Ice Condenser
Figure 6.7-2	Floor Structure
Figure 6.7-3	Wear Slab Top Surface Area Showing Typical Coolant Piping Layout
Figure 6.7-4	Lattice Frame Orientation
Figure 6.7-5	Load Distribution for Tangential Seismic and Blowdown Loads in Analytical Model

LIST OF FIGURES

Section	Title
Figure 6.7-6	Lattice Frame
Figure 6.7-7	Lattice Frame Analysis Model
Figure 6.7-8	Typical Bottom Ice Basket Assembly
Figure 6.7-9	Combinations of Concentric Axial Load and Distribution Load That Will Cause Failure of a Perforated Metal Ice Condenser Basket Material
Figure 6.7-10	Crane Assembly
Figure 6.7-11	Crane Rail Assembly
Figure 6.7-12	Refrigerant Cycle Diagram
Figure 6.7-13	Glycol Cycle to Each Containment
Figure 6.7-14	Schematic Flow Diagrams of Air Cooling Cycle
Figure 6.7-15	Air Handling Unit Support Structure
Figure 6.7-16	Flow Area - Pressure Differential
Figure 6.7-17	Lower Inlet Door Assembly
Figure 6.7-18	Details of Lower Inlet Door Showing Hinge, Proportioning Mechanism Limit Switches and Seals
Figure 6.7-19	Inlet Door Frame Assembly
Figure 6.7-20	Inlet Door Panel Assembly
Figure 6.7-21	Lower Inlet Door Shock Absorber Assembly
Figure 6.7-22	Four Loop Ice Condenser Lower Support Structure Conceptual Plan and Sections
Figure 6.7-23	Four Loop Ice Condenser Lower Support Structure General Assembly
Figure 6.7-24	ANTS Model Assembly
Figure 6.7-25	Finite Element Model of Ported Frame
Figure 6.7-26	Schematic Diagram of Forces Applied to Three Pier Lower Support Structure
Figure 6.7-27	Force Transient Hot Leg Break
Figure 6.7-28	DLF Spectra Hot Leg Break Force Transient
Figure 6.7-29	Top Deck Test Assembly
Figure 6.7-30	Details of Top Deck Door Assembly
Figure 6.7-31	Intermediate Deck Door Assembly
Figure 6.7-32	Air Distribution Duct
Figure 6.7-33	Air Distribution Duct
Figure 6.7-34	Phase Diagram for $Na_2 B_4 0_7.10 H_2O$/Water System at One Atmosphere
Figure 6.7-35	Ice Bed Compaction Versus Time
Figure 6.7-36	Test Ice Bed Compaction Versus Ice Bed Height
Figure 6.7-37	Total Ice Compaction Versus Ice Bed Height
Figure 6.7-38	Ice Condenser RTD location
Figure 6.7-39	Block Diagram Ice Condenser Temperature Monitoring System
Figure 6.7-40	Door Monitoring Zones
Figure 6.7-41	Powerhouse Unit 1 Wiring Diagram Ice Condenser System Schematic Diagrams
Figure 6.7-42	Deleted by Amendment 89
Figure 6.7-43	Deleted by Amendment 89

LIST OF FIGURES

Section	Title
Figure 6.7-44	Model of Horizontal Lattice Frame Structure
Figure 6.7-45	Group of Six Interconnected Lattice Frames
Figure 6.7-46	Lattice Frame lce Basket Gap
Figure 6.7-47	Typical Displacement Time Histories for l2-Foot Basket with End Supports - Pluck Test
Figure 6.7-48	Non Linear Dynamic Model
Figure 6.7-49	3-Mass Tangential Ice Basket Model
Figure 6.7-50	9-Mass Radial Ice Basket Model
Figure 6.7-51	48-Foot Beam Model
Figure 6.7-52	Phasing Mass Model of Adjacent Lattice Frame Bays
Figure 6.7-53	Phasing Study Model, 1 Level Lattice Frame 300 Degrees Non-Linear Model
Figure 6.7-54	Typical Crane Wall Displacement
Figure 6.7-55	Typical Ice Basket Displacement Response
Figure 6.7-56	Typical Ice Basket Impact Force Response
Figure 6.7-57	Typical Crane Wall Panel Load Response
Figure 6.7-58	Wall Panel Design Load Distribution Obtained Using the 48-Foot Beam Model Tangential Case
Figure 6.7-59	Wall Panel Design Load Distribution Obtained Using the 48-Foot Beam Model Radial Case

LIST OF FIGURES

Section **Title**

THIS PAGE INTENTIONALLY BLANK

6.0 ENGINEERED SAFETY FEATURES

6.1 ENGINEERED SAFETY FEATURE MATERIALS

6.1.1 Metallic Materials

6.1.1.1 Materials Selection and Fabrication

Typical material specifications used for the principal pressure retaining applications in components in the Engineered Safety Features (ESF) are listed in Table 6.1-1. All materials utilized are procured in accordance with the material specification requirements of the ASME Boiler and Pressure Vessel Code, Section III, plus applicable and appropriate Addenda and Code Cases.

The welding materials used for joining the ferritic base materials of the ESF conform to, or are equivalent to, ASME Material Specifications SFA 5.1, 5.2, 5.5, 5.17, 5.18, and 5.20. The welding materials used for joining nickel-chromium-iron alloy in similar base material combination and in dissimilar ferritic or austenitic base material combination conform to ASME Material Specifications SFA 5.11 and 5.14. The welding materials used for Joining the austenitic stainless steel base materials conform to ASME Material Specifications SFA 5.4 and 5.9. These materials are tested and qualified to the requirements of the ASME Code, Section III and Section IX rules and are used in procedures which have been qualified to these same rules. The methods utilized to control delta ferrite content in austenitic stainless steel weldments are discussed in Section 5.2.5.7.

All parts of components in contact with borated water are fabricated of or clad with austenitic stainless steel or equivalent corrosion resistant material. The integrity of the safety-related components of the ESF is maintained during all stages of component manufacture. Austenitic stainless steel is utilized in the final heat treated condition as required by the respective ASME Code Section II material specification for the particular type or grade of alloy. Furthermore, it is required that austenitic stainless steel materials used in the ESF components be handled, protected, stored, and cleaned according to recognized and accepted methods which are designed to minimize contamination which could lead to stress corrosion cracking. The rules covering these controls are stipulated in Westinghouse process specifications, which are discussed in Section 5.2.5.1. Additional information concerning austenitic stainless steel, including the avoidance of sensitization and the prevention of intergranular attack, can be found in Section 5.2.5. No cold worked austenitic stainless steels having yield strengths greater than 90,000 psi are used for components of the ESF within the Westinghouse standard scope.

Westinghouse supplied components within the containment that would be exposed to core cooling water and containment sprays in the event of a loss-of-coolant accident utilize materials listed in Table 6.1-1. These components are manufactured primarily of stainless steel or other corrosion resistant, high temperature material. The integrity of the materials of construction for ESF equipment when exposed to post design basis accident (DBA) conditions has been evaluated. Post-DBA conditions were

conservatively represented by test conditions. The test program[1] performed by Westinghouse considered spray and core cooling solutions of the design chemical compositions, as well as the design chemical compositions contaminated with corrosion and deterioration products which may be transferred to the solution during recirculation. The effects of sodium (free caustic), chlorine (chloride), and fluorine (fluoride) on austenitic stainless steels were considered. Based on the results of this investigation, as well as testing by ORNL and others, the behavior of austenitic stainless steels in the post-DBA environment will be very acceptable. No cracking is anticipated on any equipment even in the presence of postulated levels of contaminants, provided the core cooling and spray solution pH is maintained at an adequate level. The inhibitive properties of alkalinity (hydroxyl ion) against chloride cracking and the inhibitive characteristic of boric acid on fluoride cracking have been demonstrated. Coatings on exposed surfaces within the containment are not subject to breakdown under exposure to the spray solution and can withstand the temperature and pressure expected in the event of a loss-of-coolant accident.

6.1.1.2 Composition, Compatibility, and Stability of Containment and Core Spray Coolants

The vessels used for storing ESF coolants include the accumulators and the refueling water storage tank.

The accumulators are carbon steel clad with austenitic stainless steel. Because of the corrosion resistance of these materials, significant corrosive attack on the storage vessels is not expected.

The accumulators are vessels filled with borated water and pressurized with nitrogen gas. The nominal boron concentration, as boric acid, is 2000 ppm. Samples of the solution in the accumulators are taken periodically for checks of boron concentration. Principal design parameters of the accumulators are listed in Table 6.3-1.

The refueling water storage tank is a source of borated cooling water for injection. The nominal boron concentration, as boric acid, is 2050 ppm, which is below the solubility limit at freezing. The temperature of the refueling water is maintained above freezing. Principal design parameters of the refueling mater storage tank are given in Section 9.2.7.

The ice in the ice condenser is borated by adding sodium tetraborate to the ice. The aqueous solution resulting from the melted ice has a nominal boron concentration of 1900 " 100 ppm. In the event of an accident, this solution would be delivered to the containment sump. Containment sump pH is also controlled by the sodium tetraborate in the ice. The pH of the ice is maintained between 9.0 and 9.5, which results in a sump pH of approximately 8.1.

Information concerning hydrogen release by the corrosion of containment metals and the control of the hydrogen and combustible gas concentrations within the containment following a LOCA is discussed in Section 6.2.5.

6.1.2 Organic Materials

For paints and coatings inside containment, the conformance with Regulatory Guide 1.54 is described in Section 6.1.4.

Organic materials within the primary containment are identified and quantified according to the following categories: electrical insulation, surface coatings, ice condenser equipment, and identification tags for valves and instruments. There is no wood or asphalt inside the containment.

The information in this section is based on a single reactor unit.

6.1.2.1 Electrical Insulation

Material	Mass, lbs
Silicone Rubber	7430
Polyvinyl Chloride (PVC)	3850
Polyethylene Type Materials:	
Polyethylene	2920
Hypalon (chlorsulfonated polyethylene)	390
Polyolefins	200
Semiconducting plastic	370

6.1.2.2 Surface Coatings

Material	Mass, lbs
Concrete Surfaces:	
Epoxy	2070
Phenolic-epoxy	300
Steel Surfaces:	
Phenolic-epoxy	1810

Steel surfaces are undercoated with a 2-mil thickness of a coating that is 85% zinc in a silicate binder (carbozinc 11).

Protective coatings for use in the reactor containment have been evaluated as to their suitability in post-DBA conditions. Tests have shown that the epoxy and modified phenolic systems are the most desirable of the generic types evaluated for in-containment use. This evaluation considered resistance to high temperature and chemical conditions anticipated following a LOCA, as well as high radiation resistance[2].

6.1.2.3 Ice Condenser Equipment

Material	Mass, lbs
Lower Door Seals (Styrene butadiene)	530
Equipment Access Door Seals (Natural rubber)	5
Vent curtain (Laminated mylar)	5
Ice Condenser Seal:	
Natural Rubber	600
Nylon	360
Miscellaneous Washers:	
Noryl SEIOO (phenylene oxide)	50
Gasketing Material:	
Neoprene	5060
Drain Line Expansion Joint	

6.1.2.4 Identification Tags

Material	Mass, lbs
Valves:	
ABS (acrylonitrile-butadiene-styrene)	50
Instruments:	
ABS (acylonitrile-butadiene-styrene)	30

6.1.2.5 Valves and Instruments within Containment

Diaphragms, O-Rings, Solenoid Seals:

Buna-N (acrylonitrile-butadiene) 130

6.1.2.6 Heating and Ventilating Door Seals

Neoprene (chloroprene) 100

6.1.3 Post-Accident Chemistry

Following a LOCA, the emergency core cooling solution recirculated in containment is composed of boric acid (H_3BO_3) from the reactor coolant, refueling water storage tank (RWST), cold leg accumulators and affected injection piping, lithium hydroxide (LiOH) from the reactor coolant and sodium tetraborate ($Na_2B_4O_7$) from the ice in the ice condenser.

6.1.3.1 Boric Acid, H_3BO_3

Boric acid at a maximum concentration of 2000 ppm boron, is found in the reactor coolant loop (4 loops, reactor vessel, pressurizer), and boric acid at a maximum concentration of 2100 ppm boron is found in the cold leg injection accumulators, refueling water storage tank, and associated piping. This limit may be exceeded during Mode 6 operation. These subsystems, when at maximum volume, represent a total mass of boric acid in the amount of 49,254 pounds.

6.1.3.2 Lithium Hydroxide

Lithium Hydroxide at a maximum concentration of 7.6 ppm lithium is found in the reactor coolant system for pH control.

6.1.3.3 Sodium Tetraborate

Sodium tetraborate is an additive in the ice stored in the ice condenser for the purpose of maintaining containment sump pH of at least 8.1 after all the ice has melted.

The minimum analysis amount of ice in storage is 2.125 x 10^6 lbs. Boric acid and NaOH are formed during ice melt following a LOCA according to the following equation:

$$Na_2B_4O_7 + 7H_2O \rightarrow 2NaOH + 4H_3BO_3$$

6.1.3.4 Final Post-Accident Chemistry

In the event of an accident, the final soluble acid and soluble base concentrations for a mixture of all containment and core cooling solutions have been calculated to be 5.13 x 10^5 moles (boric acid equivalent) and 7.6 x 10^4 moles (sodium hydroxide equivalent), respectively. These calculations are based on the acid and base inventories of boric acid, and sodium tetraborate.

The final post-accident sump pH is approximately 8.1. The estimated time history of the sump pH is shown in Figure 6.1-1.

6.1.4 Degree of Compliance with Regulatory Guide 1.54 for Paints and Coatings Inside Containment

TVA is committed to adhere to Appendix B of 10 CFR 50 and ANSI N45.2 as required to produce a quality end product. Basically, it is TVA's position that the Quality Assurance Program (QA) for protective coatings inside the containment should control four activities in the coating program. The four major areas to be controlled are:

(1) The coating material itself, by extending requirements on the manufacturing process and qualification of coating systems through the use of applicable portions of ANSI Standards N101.2 and N512.

(2) The preparation of the surface to which coatings are to be applied.

(3) The inspection process.

(4) The application of the coating systems.

All four of these controlled activities have appropriate documentation and records to meet Appendix B requirements.

TVA agrees with Regulatory Guide 1.54, except the endorsement to ANSI N101.4 in paragraph C.1.

TVA's protective coating application program within the containment is in conformance with Appendix B to 10 CFR 50 and ANSI N45.2. In addition, applicable provisions found in ANSI N101.4 have been incorporated into TVA surface preparation, coating application/inspection specifications, and coating QA procedures.

Controlled coatings are accounted for and maintained within the limits specified in the analysis for containment coatings and in the transport analysis for the zone of influence. The zone of influence is defined as that area at the water surface into which a falling paint particle does not settle to the bottom, but rather, is transported to the trash rack screens by the flow of water.

REFERENCES

(1) WCAP-7803, "Behavior of Austenitic Stainless Steel in Post Hypothetical Loss of Coolant Environment."

(2) WCAP-7825, "Evaluation of Protective Coatings for Use in Reactor Containment."

Table 6.1-1 Engineered Safety Feature Materials

Valves	
Bodys	SA182 Type F316 or SA351 Gr CF8 or CF8M
Bonnets	SA182 Type F316 or SA351 Gr CF8 or CF8M
Discs	SA182 Type F316 or SA564 Gr 630 Cond 1100°F Heat Treatment or SA351 Gr CF8 or CF8M
Pressure Retaining Bolting	SA453 Gr 660
Pressure Retaining Nuts	SA453 Gr 660 or SA194 Gr 6
Auxiliary Heat Exchangers	
Heads	SA240 Type 304
Nozzle Necks	SA182 Gr F304
Tubes	SA 213 TP304
Tube Sheets	SA182 Gr F304
Shells	SA240 and SA312 Type 304
Auxiliary Pressure Vessels, Tanks, Filters, etc.	
Shells & Heads	3SA351 Gr CF8A and SA240 Type 304 or SA264 Clad Plate of SA516 Gr 70 with SA240 Type 304L Clad - Stainless Steel Weld Overlay A-8 Analysis
Flanges & Nozzles	SA182 Gr F304 or SA105 with SA240 Type 304 and Stainless Steel Weld Overlay A-8 Analysis
Piping	SA312 and SA240 TP304 or TP316 Seamless
Pipe Fittings	SA403 WP304 Seamless
Closure Bolting & Nuts	SA193 Gr B7 and SA194 Gr 2H

Table 6.1-1 Engineered Safety Feature Materials (Continued)

Auxiliary Pumps	
Pump Casing & Heads	SA351 Gr CF8 or CF8M, SA182 Gr F304 or F316
Flanges & Nozzles	SA182 Gr F304 or F316, SA403 Gr WP316L Seamless
Stuffing or Packing Box Cover	SA351 Gr CF8 or CF8M, SA240 TP304 or TP316
Closure Bolting & Nuts	SA193 Gr B6, B7 or B8M and SA194 Gr2H or Gr8M, SA193 Gr B6, B7 or B8M; SA453 Gr 660; and Nuts, SA194 Gr 2H, Gr 8M, and Gr 6

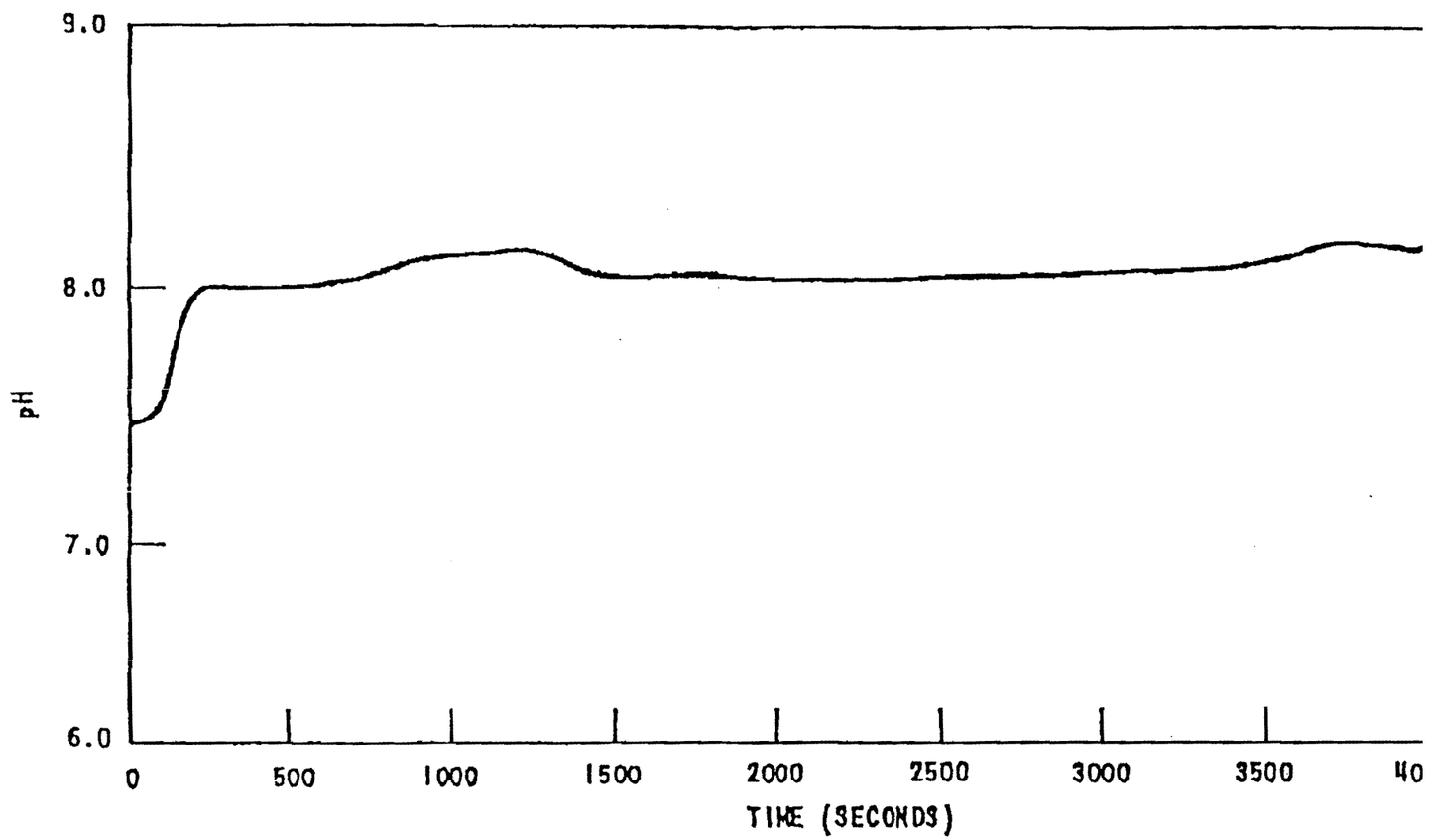

Figure 6.1-1 Containment Sump pH Versus Time

THIS PAGE INTENTIONALLY BLANK

6.2 CONTAINMENT SYSTEMS

6.2.1 Containment Functional Design

6.2.1.1 Design Bases

6.2.1.1.1 Primary Containment Design Bases

The containment is designed to assure that an acceptable upper limit of leakage of radioactive material is not exceeded under design basis accident conditions. For purposes of integrity, the containment may be considered as the containment vessel and containment isolation system. This structure and system are directly relied upon to maintain containment integrity. The emergency gas treatment system and Reactor Building function to keep out-leakage minimal (the Reactor Building also serves as a protective structure), but are not factors in determining the design leak rate.

The containment is specifically designed to meet the intent of the applicable General Design Criteria listed in Section 3.1. This section, Chapter 3, and other portions of Chapter 6 present information showing conformance of design of the containment and related systems to these criteria.

The ice condenser is designed to limit the containment pressure below the design pressure for all reactor coolant pipe break sizes up to and including a double-ended severance. Characterizing the performance of the ice condenser requires consideration of the rate of addition of mass and energy to the containment as well as the total amounts of mass and energy added. Analyses have shown that the accident which produces the highest blowdown rate into a condenser containment will result in the maximum containment pressure rise; that accident is the double-ended guillotine or split severance of a reactor coolant pipe. The design basis accident for containment analysis based on sensitivity studies is therefore the double-ended guillotine severance of a reactor coolant pipe at the reactor coolant pump suction. Post-blowdown energy releases can also be accommodated without exceeding containment design pressure.

The functional design of the containment is based upon the following accident input source term assumptions and conditions:

(1) The design basis blowdown energy of 318×10^6 Btu and mass of 493×10^3 lb put into the containment.

(2) A reactor power of 3579 MWt (plus 2% allowance for calorimetric error).

(3) The minimum engineered safety features are (i.e., the single failure criterion applied to each safety system) comprised of the following:

(a) The ice condenser which condenses steam generated during a LOCA, thereby limiting the pressure peak inside the containment (see Section 6.7).

(b) The containment isolation system which closes those fluid penetrations not serving accident-consequence limiting purposes (see Section 6.2.4).

(c) The containment spray system which sprays cool water into the containment atmosphere, thereby limiting the pressure peak (particularly in the long term - see Section 6.2.2).

(d) The emergency gas treatment system (EGTS) which produces a slightly negative pressure within the annulus, thereby precluding out-leakage and relieving the post-accident thermal expansion of air in the annulus (see Section 6.5.1).

(e) The air return fans which return air to the lower compartment.

Consideration is given to subcompartment differential pressure resulting from a design basis accident discussed in Sections 3.8.3.3, 6.2.1.3.9, and 6.2.1.3.4. If a design basis accident were to occur due to a pipe rupture in these relatively small volumes, the pressure would build up at a faster rate than in the containment, thus imposing a differential pressure across the wall of these structures.

Parameters affecting the assumed capability for post-accident pressure reduction are discussed in Section 6.2.1.3.3.

Three events that may result in an external pressure on the containment vessel have been considered:

(1) Rupture of a process pipe where it passes through the annulus.

(2) Inadvertent air return fan operation during normal operation.

(3) Inadvertent containment spray system initiation during normal operation.

The design of the guard pipe portion of hot penetrations is such that any process pipe leakage in the annulus is returned to the containment. All process piping which has potential for annulus pressurization upon rupture is routed through hot penetrations. Section 6.2.4 discusses hot penetrations.

Inadvertent air return fan operation during normal operation opens the ice condenser lower inlet doors, which in turn, results in sounding an alarm in the MCR. Even with a hypothetical situation in which the operator cannot shut off the air return fan, the

operator has the capability of opening an eight inch vacuum relief line (Penetration X-8O, Section 6.2.4) to relieve the net external design pressure.

The logic and control circuits of the containment spray system are such that inadvertent containment spray would not take place with a single failure. The spray pump must start and the isolation valve must open before there can be any spray. In addition, the Watts Bar containment is so designed that even if an inadvertent spray occurs, containment integrity is preserved without the use of a vacuum relief.

The containment spray system is automatically actuated by a hi-hi containment pressure signal from the solid state protection system (SSPS). To prevent inadvertent automatic actuation, four comparator outputs, one from each protection set are processed through two coincidence gates. Both coincidence gates are required to have at least two high inputs before the output relays, which actuate the containment spray system, are energized. Separate output relays are provided for the pump start logic and discharge valve open logic. Additional protection is provided by an interlock between the pump and discharge valve, which requires the pump to be running before the discharge valve will automatically open.

Section 3.8.2 describes the structural design of the containment vessel. The containment vessel is designed to withstand a net external pressure of 2.0 psi. The containment vessel is designed to withstand the maximum expected net external pressure in accordance with ASME Boiler and Pressure and Vessel Code Section III, paragraph NE-7116.

6.2.1.2 Primary Containment System Design

The containment consists of a containment vessel and a separate Shield Building enclosing an annulus. The containment vessel is a freestanding, welded steel structure with a vertical cylinder, hemispherical dome, and a flat circular base. The Shield Building is a reinforced concrete structure similar in shape to the containment vessel. The design of these structures is described in Section 3.8.

The design internal pressure for the containment is 13.5 psig, and the design temperature is 250°F. The design basis leakage rate is 0.25%/24 hr. The design methods to assure integrity of the containment internal structures and sub-compartments from accident pressure pulses are described in Section 3.8.

6.2.1.3 Design Evaluation

6.2.1.3.1 Primary Containment Evaluation

(1) The leaktightness aspect of the secondary containment is discussed in Section 6.2.5. The primary containment's leaktightness does not depend on the operation of any continuous monitoring or compressor system. The leak testing of the primary containment and its isolation system is discussed in Section 6.2.6.

(2) The acceptance criteria for the leaktightness of the primary containment are such that at containment design pressure, there is a 25% margin between the acceptable maximum leakage rate and the maximum permissible leakage rate.

6.2.1.3.2 General Description of Containment Pressure Analysis

The time history of conditions within an ice condenser containment during a postulated loss of coolant accident can be divided into two periods for calculation purposes:

(1) The initial reactor coolant blowdown, which for the largest assumed pipe break occurs in approximately 10 seconds.

(2) The post blowdown phase of the accident which begins following the blowdown and extends several hours after the start of the accident.

During the first few seconds of the blowdown period of the reactor coolant system, containment conditions are characterized by rapid pressure and temperature transients. It is during this period that the peak transient pressures, differential pressures, temperature and blowdown loads occur. To calculate these transients a detailed spatial and short time increment analysis was necessary. This analysis was performed with the TMD computer code with the calculation time of interest extending up to a few seconds following the accident initiation.

Physically, tests at the ice condenser Waltz Mill test facility have shown that the blowdown phase represents that period of time in which the lower compartment air and a portion of the ice condenser air are displaced and compressed into the upper compartment and the remainder of the ice condenser. The containment pressure at or near the end of blowdown is governed by this air compression process. The containment compression ratio calculation is described in Section 6.2.1.3.4.

Containment pressure during the post blowdown phase of the accident is calculated with the LOTIC code which models the containment structural heat sinks and containment safeguards systems.

6.2.1.3.3 Long-Term Containment Pressure Analysis

Early in the ice condenser development program it was recognized that there was a need for modeling of long-term ice condenser containment performance. It was realized that the model would have to have capabilities comparable to those of the dry containment (COCO) model. These capabilities would permit the model to be used to solve problems of containment design and optimize the containment and safeguards systems. This has been accomplished in the development of the LOTIC code[1].

The model of the containment consists of five distinct control volumes; the upper compartment, the lower compartment, the portion of the ice bed from which the ice has melted, the portion of the ice bed containing unmelted ice, and the dead ended compartments. The ice condenser control volume with unmelted ice is further subdivided into six subcompartments to allow for maldistribution of break flow to the ice bed.

The conditions in these compartments are obtained as a function of time by the use of fundamental equations solved through numerical techniques. These equations are solved for three distinct phases in time. Each phase corresponds to a distinct physical characteristic of the problem. Each of these phases has a unique set of simplifying assumptions based on test results from the ice condenser test facility. These phases are the blowdown period, the depressurization period, and the long term.

The most significant simplification of the problem is the assumption that the total pressure in the containment is uniform. This assumption is justified by the fact that after the initial blowdown of the reactor coolant system, the remaining mass and energy released from this system into the containment are small and very slowly changing. The resulting flow rates between the control volumes will also be relatively small. These small flow rates then are unable to maintain significant pressure differences between the compartments.

In the control volumes, which are always assumed to be saturated, steam and air are assumed to be uniformly mixed and at the control volume temperature. The air is considered a perfect gas, and the thermodynamic properties of steam are taken from the ASME steam table.

For the purpose of calculation, the condensation of steam is assumed to take place in a condensing node located between the two control volumes in the ice storage compartment.

Containment Pressure Calculation

The following are the major input assumptions used in the LOTIC analysis for the pump suction pipe rupture case with the steam generators considered as an active heat source for the Watts Bar Nuclear Plant containment:

(1) Minimum safeguards are employed in all calculations, e.g., one of two spray pumps and one of two spray heat exchangers; one of two RHR pumps and one of two RHR heat exchangers providing flow to the core; one of two safety injection pumps and one of two centrifugal charging pumps; and one of two air return fans.

(2) 2.125×10^6 lbs. of ice initially in the ice condenser which is at 15°F. (This is less than the Technical Specification limit.)

(3) The blowdown, reflood, and post reflood mass and energy releases described in Section 6.2.1.3.6 were used.

(4) Blowdown and post-blowdown ice condenser drain temperatures of 190°F and 130°F are used[5].

(5) Nitrogen from the accumulators in the amount of 2218 lbs. included in the calculations.

(6) Essential raw cooling water temperature of 85°F is used on the spray heat exchanger and the component cooling heat exchanger.

(7) The air return fan is effective 10 minutes after the transient is initiated. The actual air return fan initiation can take place in 9 ∀ 1 minutes, with initiation as early as 8 minutes not adversely affecting the analysis results.

(8) No maldistribution of steam flow to the ice bed is assumed.

(9) No ice condenser bypass is assumed. (This assumption depletes the ice in the shortest time and is thus conservative.)

(10) The initial conditions in the containment are a temperature of 100°F in the lower and dead-ended volumes and a temperature of 85°F in the upper volume. All volumes are at a pressure of 0.3 psig and a 10% relative humidity.

(11) A containment spray pump flow of 4000 gpm is used in the upper compartment. A diesel loading sequence for the containment sprays to energize and come up to full flow and head in 135 seconds has been used in this analysis. This initial time sequence modification was made to ensure that a frequency transient did not occur for a simultaneous LOCA and loss of offsite power (LOOP) as desired by NRC Regulatory Guide 1.9, Section C4. Subsequent analysis has changed the loading sequence to 221 seconds. However, this did not significantly affect the results obtained with the 135-second delay. It is also noted that the calculated CSS flow rate is 4550 gpm, which bounds the 4000 gpm flow rate used in the analysis and, being conservative, offsets any effect due to the sequence delay change.

(12) A residual spray (2000 gpm) is used starting 1 hour after the transient is initiated. The residual heat removal pump and spray pump take suction from the sump during recirculation.

The minimum time at which the RHR pumps can be diverted to the RHR sprays is specified in the plant operating procedures as one hour after the accident. A discussion of the core cooling capability of the emergency core cooling system is given in Section 6.3.1 for this mode of operation.

(13) Containment structural heat sink data is found in Table 6.2.1-1.

(14) The operation of one containment spray heat exchanger (UA = 2.446×10^6 Btu/hr-°F) for containment cooling and the operation of one RHR heat exchanger (UA = 1.61×10^6 Btu/hr-°F) for core cooling.

(15) The air return fan returns air at a rate of 40,000 cfm from the upper to lower compartment.

(16) An active sump volume of 51000 ft^3 is used.

(17) The pump flowrates vs. time given in Table 6.2.1-2 were used. (These flow values reflect ECCS pumps at runout against the design containment pressure, using the minimum composite pump curves shown in Figures 6.3-2, 6.3-3, and 6.3-4, which are degraded by 5% and bound what is achievable in the plant. Switchover times from injection to recirculation that are achievable in the plant for each ECCS pump are also conservative in the analysis.)

(18) A power rating of 102% of licensed power (3425 MWt) is assumed, but not explicitly modeled. [Decay heat is based on a reactor power of 3579 MWt (+2%) for mass and energy release computations. See Section 6.2.1.3.6.]

With these assumptions, the heat removal capability of the containment is sufficient to absorb the energy releases and still keep the maximum calculated pressure well below design.

The following plots are provided:

Figure 6.2.1-1, Containment Pressure Transient,

Figure 6.2.1-2, Upper and Lower Compartment Temperature Transients,

Figure 6.2.1-3, Active and Inactive Sump Temperature Transient,

Figure 6.2.1-4, Ice Melt Transient.

Tables 6.2.1-3 and 6.2.1-4 give energy accountings at various points in the transient.

As can be seen from Figure 6.2.1-1 the maximum calculated Containment pressure is 11.21 psig, occurring at approximately 3600.9 seconds.

Also, a parameter study of the ice mass was performed. These results are presented in Figure 6.2.1-4A.

Structural Heat Removal

Provision is made in the containment pressure analysis for heat storage in interior and exterior walls. Each wall is divided into a number of nodes. For each node, a conservation of energy equation expressed in finite difference forms accounts for transient conduction into and out of the node and temperature rise of the node. Table 6.2.1-1 is a summary of the containment structural heat sinks used in the analysis. The material property data used is found in Table 6.2.1-5.

The heat transfer coefficient to the containment structures is based primarily on the work of Tagami. An explanation of the manner of application is given in Reference [3].

When applying the Tagami correlations a conservative limit was placed on the lower compartment stagnant heat transfer coefficients. They were limited to 72 Btu/hr-ft^2. This corresponds to a steam-air ratio of 1.4 according to the Tagami correlation. The

imposition of this limitation is to restrict the use of the Tagami correlation within the test range of steam-air ratios where the correlation was derived.

6.2.1.3.4 Short-Term Blowdown Analysis

TMD Code - Short-Term Analysis

(1) Introduction

The basic performance of the ice condenser reactor containment system has been demonstrated for a wide range of conditions by the Waltz Mill Ice Condenser Test Program. These results have clearly shown the capability and reliability of the ice condenser concept to limit the Containment pressure rise subsequent to a hypothetical loss-of-coolant accident.

To supplement this experimental proof of performance, a mathematical model has been developed to simulate the ice condenser pressure transients. This model, encoded as computer program TMD (Transient Mass Distribution), provides a means for computing pressures, temperatures, heat transfer rates, and mass flow rates as a function of time and location throughout the containment. This model is used to compute pressure differences on various structures within the containment as well as the distribution of steam flow as the air is displaced from the lower compartment. Although the TMD code can calculate the entire blowdown transient, the peak pressure differences on various structures occur within the first few seconds of the transient.

(2) Analytical Models (No Entrainment)

The mathematical modeling in TMD is similar to that of the SATAN blowdown code in that the analytical solution is developed by considering the conservation equations of mass, momentum and energy and the equation of state, together with the control volume technique for simulating spatial variation. The governing equations for TMD are given in Reference [4].

The moisture entrainment modifications to the TMD code are discussed, in detail, in Reference [4]. These modifications comprise incorporating the additional entrainment effects into the momentum and energy equations.

As part of the review of the TMD code, additional effects are considered. Changes to the analytical model required for these studies are described in Reference [4].

These studies consist of:

(a) Spatial acceleration effects in ice bed
(b) Liquid entrainment in ice beds
(c) Upper limit on sonic velocity
(d) Variable ice bed loss coefficient
(e) Variable door response
(f) Wave propagation effects

Additionally the TMD code has been modified to account for fluid compressibility effects in the high Mach number subsonic flow regime.

Experimental Verification

The performance of the TMD code was verified against the 1/24 scale air tests and the 1968 Waltz Mill tests. For the 1/24 scale model the TMD code was utilized to calculate flow rates to compare against experimental results. The effect of increased nodalization was also evaluated. The Waltz Mill test comparisons involved a reexamination of test data. In conducting the reanalyses, representation of the 1968 Waltz Mill test was reviewed with regard to parameters such as loss coefficients and blowdown time history. The details of this information are given in Reference [4].

The Waltz Mill Ice Condenser Blowdown Test Facility was reactivated in 1973 to verify the ice condenser performance with the following redesigned plant hardware scaled to the test configuration:

(1) Perforated metal ice baskets and new design couplings.

(2) Lattice frames sized to provide the correct loss coefficient relative to plant design.

(3) Lower support beamed structure and turning vanes sized to provide the correct turning loss relative to the plant design.

(4) No ice baskets in the lower ice condenser plenum opposite the inlet doors.

The result of these tests was to confirm that conclusions derived from previous Waltz Mill tests have not been significantly changed by the redesign of plant hardware. The TMD Code has, as a result of the 1973 test series, been modified to match ice bed heat transfer performance. Detailed information on the 1973 Waltz Mill test series is found in Reference [5].

Application to Plant Design (General Description)

As described in Reference [4], the control volume technique is used to spatially represent the containment. The containment is divided into 50 elements to give a detailed representation of the local pressure transient on the containment shell and internal concrete structures. This division of the containment is similar for all ice condenser plants.

The Watts Bar plant containment has been divided into 50 elements or compartments as shown in Figures 6.2.1.5, 6.2.1-6, 6.2.1-7, and 6.2.1-8. The interconnections between containment elements in the TMD code is shown schematically in Figure 6.2.1-9. Flow resistance and inertia are lumped together in the flow paths connecting the elements shown. The division of the lower compartments into 6 volumes occurs at the points of greatest flow resistance, i.e., the four steam generators, pressurizer and refueling cavity.

Each of these lower compartment sections delivers flow through doors into a section behind the doors and below the ice bed. Each vertical section of the ice bed is, in turn, divided into three elements. The upper plenum between the top of the ice bed and the upper doors is represented by an element. Thus, a total of thirty elements (Elements 7 through 24 and 38 through 49 are used to simulate the ice condenser). The six elements at the top of the ice bed between bed and upper doors deliver to element number 25 the upper compartment. Note that cross flow in the ice bed is not accounted for in the analysis; this yields the most conservative results for the particular calculations described herein. The upper reactor cavity (Element 33) is connected to the lower compartment volumes and provides cross flow for pressure equalization of the lower compartments. The less active compartments, called dead-ended compartments (Elements 26 through 32 and 34 through 37) outside the crane wall are pressurized by ventilation openings through the crane wall into the fan compartments.

For each element in the TMD network the volume, initial pressure and initial temperature conditions are specified. The ice condenser elements have additional inputs of mass of ice, heat transfer area and condensate layer length. For each flow path between elements flow resistance is specified as a loss coefficient "K" or a fraction loss "L/D" or a combination of the two based on the flow area specified between elements. Friction factor, friction factor length and hydraulic diameter are specified for the friction loss.

Additionally, input for each flow path includes the area ratio (minimum area/maximum area) which is used to account for compressibility effects across flow path contractions. The code input for each flow path is the flow path length used in the momentum equation. The ice condenser loss coefficients have been based on the 1/4-scale tests representative of the current ice condenser geometry. The test loss coefficient was increased to include basket roughness effects and to include intermediate and top deck pressure losses. The loss coefficient is based on removal of door port flow restrictors. To better represent short term transients effects, the opening characteristics of the lower, intermediate, and top deck ice condenser doors have been modeled in the TMD code. The containment geometric data for the elements and flow paths used in the TMD code is confirmed to agree with the actual design by TVA and Westinghouse. An initial containment pressure of 0.3 psig was assumed in the analysis. Initial containment pressure variation about the assumed 0.3 psig value has only a slight affect on the initial pressure peak and the compression ratio pressure peak. TMD input data is given in Tables 6.2.1-6 and 6.2.1-7.

The reactor coolant blowdown rates used in these cases are based on the SATAN analysis of a double-ended rupture of either a hot or a cold leg reactor coolant pipe

utilizing a discharge coefficient of 1.0. The models and assumptions used to calculate the short-term mass and energy releases are described in Reference [9]. Tables 6.2.1-23 and 6.2.1-24 present the mass and energy release data used for this analysis.

A number of analyses have been performed to determine the various pressure transients resulting from hot and cold leg reactor coolant pipe breaks in any one of the six lower compartment elements. The analyses were performed using the following assumptions and correlations:

(1) Flow was limited by the unaugmented critical flow correlation.

(2) The TMD variable volume door model, which accounts for changes in the volumes of TMD elements as the door opens, was implemented.

(3) The heat transfer calculation used was based on performance during the 1973-1974 Waltz Mill test series. A higher value of the ELJAC parameter has been used and an upper bound on calculated heat transfer coefficients has been imposed[5].

(4) One hundred percent moisture entrainment was assumed.

(5) Compressibility effects due to flow area contractions were modeled.

Figures 6.2.1-10 and 6.2.1-11 are representative of the typical upper and lower compartment pressure transients that result from a hypothetical double-ended rupture of a reactor coolant pipe for the worst possible location in the lower compartment of the containment; i.e., hot leg and cold leg breaks in Element 1.

Initial Pressures

Results of the analysis for the Watts Bar Plant are presented in Tables 6.2.1-8 through 6.2.1-11. The peak pressures and peak differential pressures resulting from hot and cold leg reactor coolant pipe breaks in each of the six lower compartment control volumes were calculated.

Table 6.2.1-8 presents the maximum calculated pressure peak for the lower compartment elements resulting from hot and cold leg double ended pipe breaks. Generally, the maximum peak pressure within a lower compartment element results when the pipe break occurs in that element. A cold leg break in Element 1 creates the highest pressure peak, also in Element 1, of 18.5 psig.

Table 6.2.1-9 presents the maximum calculated peak pressure in each of the ice condenser sections resulting from any pipe break location. The maximum peak pressure in each of the ice condenser sections is found in the lower plenum element of the section. The peak pressure was calculated to be 13.9 psig in Element 40.

Table 6.2.1-10 presents the maximum calculated differential pressures across the operating deck (divider barrier) between the lower compartment elements and the upper compartment. These values are approximately the same as the maximum calculated differential pressure across the lower crane wall between the lower

compartment elements and the dead ended volumes surrounding the lower compartment. The peak differential pressure of 16.6 psi was calculated to be between Elements 1 and 25 for a cold leg break.

Table 6.2.1-11 presents the maximum calculated differential pressures across the upper crane wall between the upper ice condenser elements and the upper compartment. The peak differential of 8.4 psi pressure was calculated to be between Element 7-8-9 and 25 for a hot leg pipe break.

Consideration is given to the calculation of subcompartment pressures (and pressure differentials) for cases other than the design basis double ended reactor coolant pipe rupture in the lower compartment. Discussion of these analyses is treated in Section 6.2.1.3-9.

Sensitivity Studies

A series of TMD runs for D. C. Cook investigated the sensitivity of peak pressures to variations in individual input parameters for the design basis blowdown rate and 100 percent entrainment. This analysis used a DEHL break in Element 6 of D. C. Cook. Table 6.2.1-12 presents the results of this sensitivity study.

As part of the short-term containment pressure analysis of ice condenser units, the pressure response to both DEHL and DECL breaks are routinely considered for each of the loop compartments.

Choked Flow Characteristics

The data in Figure 6.2.1-12 illustrate the behavior of mass flow rate as a function of upstream and downstream pressures, including the effects of flow choking. The upper plot shows mass flow rate as a function of upstream pressure for various assumed values of downstream pressure. For zero back pressure ($P_d = 0$), the entire curve represents choked flow conditions with the flow rate approximately proportional to upstream pressure P_u. For higher back pressure, the flow rates are lower until the upstream pressure is high enough to provide choked flow. After the increase in upstream pressure is sufficient to provide flow chokings further increases in upstream pressure cause increases in mass flow rate along the curve for $P_d = 0$. The key point in this illustration is that flow rate continues to increase with increasing upstream pressure, even after flow choking conditions have been reached. Thus, choking does not represent a threshold beyond which dramatically sharper increases in compartment pressures could be expected because of limitations on flow relief to adjacent compartments.

The phenomenon of flow choking is more frequently explained by assuming a fixed upstream pressure and examining the dependence of flow rate with respect to decreasing downstream pressure. This approach is illustrated for an assumed upstream pressure of 30 psia as shown in the upper plot with the results plotted vs. downstream pressure in the lower plot. For fixed upstream conditions, flow choking represents an upper limit flow rate beyond which further decreases in back pressure do not produce any increase in mass flow rate.

Compression Ratio Analysis

As blowdown continues following the initial pressure peak from a double-ended cold leg break, the pressure in the lower compartment again increases, reaching a peak at or before the end of blowdown. The pressure in the upper compartment continues to rise from beginning of blowdown and reaches a peak which is approximately equal to the lower compartment pressure. After blowdown is complete, the steam in the lower compartment continues to flow through the doors into the ice bed compartment and is condensed.

The primary factor in producing this upper containment pressure peak and, therefore, in determining design pressure, is the displacement of air from the lower compartment into the upper containment. The ice condenser quite effectively performs its function of condensing virtually all the steam that enters the ice beds. Essentially, the only source of steam entering the upper containment is from leakage through the drain holes and other leakage around crack openings in hatches in the operating deck separating the lower and upper portions of the containment building.

A method of analysis of the compression peak pressure was developed based on the results of full-scale section tests. This method consists of the calculation of the air mass compression ratio, the polytropic exponent for the compression process, and the effect of steam bypass through the operating deck on this compression.

The compression peak pressure in the upper containment for the Watts Bar plant design is calculated to be 8.2 psig (for an initial air pressure of 0.3 psig). This compression pressure includes the effect of a pressure increase of 0.4 psi from steam bypass and also for the effects of the dead-ended volumes. The nitrogen partial pressure from the accumulators is not included since this nitrogen is not added to the containment until after the compression peak pressure has been reduced, which is after blowdown is completed. This nitrogen is considered in the analysis of pressure decay following blowdown as presented in the long term performance analysis using the LOTIC code. The following sections discuss the major parameters affecting the compression peak. Specifically they are: air compression, steam bypass, blowdown rate, and blowdown energy.

Air Compression Process Description

The volumes of the various containment compartments determine directly the air volume compression ratio. This is basically the ratio of the total active containment air volume to the compressed air volume during blowdown. During blowdown air is displaced from the lower compartment and compressed into the ice condenser beds and into the upper containment above the operating deck. It is this air compression process which primarily determines the peak in containment pressure, following the initial blowdown release. A peak compression pressure of 8.2 psig is based on the Watts Bar Plant design compartment volumes shown in Table 6.2.1-13.

Figure 6.2.1-13 shows the sensitivity of the compression peak pressure with different air compression ratios.

Methods of Calculation and Results

Full-Scale Section Tests

The actual Waltz Mill test compression ratios were found by performing air mass balances before the blowdown and at the time of the compression leak pressure, using the results of three full-scale special section tests. These three tests were conducted with an energy input representative of the plant design.

In the calculation of the mass balance for the ice condenser, the compartment is divided into two sub-volumes; one volume representing the flow channels and one volume representing the ice baskets. The flow channel volume is further divided into four sub-volumes. The partial air pressure and mass in each sub-volume is found from thermocouple readings by assuming that the air is saturated with steam at the measured temperature. From these results, the average temperature of the air in the ice condenser compartment is found, and the volume occupied by the air at the total condenser pressure is found from the equation of state as follows:

$$V_a2 = \frac{M_a2 R_a T_a2}{P_{2s}} \qquad 1$$

where:

V_{a2} = Volume of ice condenser occupied by air (ft^3)

M_{a2} = Mass of air in ice condenser compartment (lb)

T_{a2} = Average temperature of air in ice condenser (°F)

P_2 = Total ice condenser pressure (lb/ft^2)

R_a = Ideal gas constant

The partial pressure and mass of air in the lower compartment are found by averaging the temperatures indicated by the thermocouples located in that compartment and assuming saturation conditions. For these three tests, it was found that the partial pressure, and hence the mass of air in the lower compartment, was zero at the time of the compression peak pressure.

The actual Waltz Mill test compression ratio is then found from the following:

$$C = \frac{V_1 + V_2 + V_3}{V_3 + V_{a2}} \qquad 2$$

where:

V_1 = Lower compartment volume (ft^3)

V_2 = Ice condenser compartment volume (ft^3)

V_3 = Upper compartment volume (ft^3)

The polytropic exponent for these tests is then found from the measured compression pressure and the compression ratio calculated above. Also considered is the pressure increase that results from the leakage of steam through the deck into the upper compartment.

The compression peak pressure in the upper compartment for the tests or containment design is then given by:

$$P = P_O C_r + \Delta P_{deck} \qquad 3$$

where:

P_O = Initial pressure (psia)

P = Compression peak pressure (psia)

C_r = Volume compression ratio

n = Polytropic exponent

ΔP_{deck} = Pressure increase caused by deck leakage (psi)

Using the method of calculation described above, the compression ratio is calculated for the three full-scale section tests. From the results of the air mass balances, it was found that air occupied 0.645 of the ice condenser compartment volume at the time of peak compression, or

$$V_{a2} = 0.645 \ V_2 \qquad (4)$$

The final compression volume includes the volume of the upper compartment as well as part of the volume of air in the ice condenser. The results of the full-scale section tests (Figure 6.2.1-14) show a variation in steam partial pressure from 100% near the bottom of the ice condenser to essentially zero near the top. The thermocouples and pressure detectors confirm that at the time when the compression peak pressure is reached steam occupies less than half of the volume of the ice condenser. The analytical model used in defining the containment pressure peak uses upper

compartment volume plus 64.5% of the ice condenser air volumes as the final volume. This 64.5% value was determined from appropriate test results.

The calculated volume compression ratios are shown in Figure 6.2.1-15, along with the compression peak pressures for these tests. The compression peak pressure is determined from the measured pressure, after accounting for the deck leakage contribution. From the results shown in Figure 6.2.1-15, the polytropic exponent for these tests is found to be 1.13.

Plant Case

For the Watts Bar design, the volume compression ratio is calculated using Equation 2, modeling the upper plenum as part of the upper compartment, and Table 6.2.1-13 as:

$$C_r = \frac{1,109,414}{698,000 + [0.645 \times 122,400]} \qquad 5$$

$$C_r = 1.43$$

The peak compression pressure, based on an initial containment pressure of 15.0 psia (0.3 psig), is then given by Equation 3 as:

$$P_3 = 15.0\ (1.43)^{1.13} + 0.4$$

$$P_3 = 22.9 \text{ psia or } 8.2 \text{ psig}$$

This peak compression pressure includes a pressure increase of 0.4 psi from steam bypass through the deck (see Section 6.2.1.3.5).

Sensitivity to Blowdown Energy

The sensitivity of the upper and lower compartment peak pressure versus blowdown rate as measured from the 1974 Waltz Mill Tests is shown in Figure 6.2.1-16. This figure shows the magnitude of the peak pressure versus the amount of energy released in terms of percentage of RCS energy release rate.

Percent energy blowdown rate was selected for the plot because energy flow rate more directly relates to volume flow rate and therefore pressure. There are two important effects to note from the peak upper compartment pressure versus blowdown rate: (1) the magnitude of the final peak pressure in the upper compartment is low (about 9 psig) for the plant design DECL blowdown rate; (2) even an increase in this rate up to 141% of the blowdown energy rate produces only a small increase in the magnitude of this peak pressure (about 1 psi). The major factor setting the peak pressure reached in the upper compartment is the compression of air displaced by steam from the lower compartment into the upper compartment. The lower compartment initial peak pressure shows a relatively low peak pressure of 12.9 psig for the design basis DECL blowdown rate, and even a substantial increase in blowdown energy rate (141%

reference initial DECL) would cause an increase in initial peak pressure of only 3 psi. The peak pressure in the lower compartment is due mainly to flow resistance caused by displacement of air from the lower compartment into the upper compartment.

6.2.1.3.5 Effect of Steam Bypass

The sensitivity of the compression peak pressure to deck bypass is shown in Figure 6.2.1-17, which shows that an increase in deck bypass area of 50% would cause an increase of about 0.2 psi in final peak compression pressure. Also, it is important to note that the plant final peak compression pressure of 8.2 psig already includes a contribution of 0.4 psi from the plant deck bypass area of 5 ft^2.

This effect of deck leakage on upper containment pressure has been verified by a series of four special, full-scale section tests. These tests were all identical except different size deck leakage areas were used.

The results of these tests are given in Figure 6.2.1-18 which includes two curves of test results. Each curve shows the difference in upper compartment pressure between one test and another resulting from a difference in deck leakage area. One curve shows the increase in upper compartment pressure at the end of the boiler blowdown (after the compression peak pressure, at about 50 seconds in these tests), and the second curve shows the increase in upper compartment peak pressure (at about 10 seconds in these tests). It should be noted that the pressure at the end of the blowdown is less than the peak compression ratio pressure occurring at about 10 seconds for reference blowdown test.

The containment pressure increase due to deck leakage is directly proportional to the total amount of steam leakage into the upper compartment, and the amount of this steam leakage is, in turn, proportional to the amount of steam released from the boiler, less the inventory of steam remaining in the lower compartment. Notably, the increase in upper compartment compression peak pressure is substantially less than the upper compartment pressure increase at the end of blowdown, because the peak compression pressure occurs before the boiler has released all of its energy.

The calculated maximum pressure rise due to deck leakage (when all of the boiler energy release has occurred) is also shown in Figure 6.2.1-18. The slope of this curve is 0.095 psi/ft^2 for the tests and is equivalent to 0.107 psi/ft^2 for the plant design. The difference between the two coefficients is due to a small difference in upper compartment volume between the plant design and these tests.

As shown in Figure 6.2.1-18, the calculated curve for maximum pressure increase at the end of blowdown agrees closely with the measured curve at small deck leakage areas but deviates at larger leakage areas. This deviation apparently results from the condensation of upper compartment steam by the walls of the upper compartment and by the ice at the top of the condenser during the tests. Pressure would also be reduced by heat losses in a plant; however, for conservatism, no credit is taken for this effect. As demonstrated by tests, the compression peak pressure in the upper compartment occurs before the boiler releases all of its energy, and the measured increase in peak compression pressure due to increased deck leakage, is proportionately reduced. For

the case of the plant design, the final peak compression pressure is conservatively assumed to occur when the reactor coolant system release is 75% of its total energy. This value is selected as a reference value, based on the results of a number of tests conducted with different blowdown rates and total energy releases, as shown in Figure 6.2.1-19. The actual deck leakage coefficient is therefore:

$$\frac{\Delta P_3}{A_{deck}} = 0.107 \times 0.75 = 0.080 \text{psi/ft}^2$$

The divider barrier including the enclosures over the pressurizer, steam generators and reactor vessel, is designed to provide a reasonably tight seal against leakage. Holes are purposely provided in the bottom of the refueling cavity to allow water from sprays in the upper compartment to drain to the sump in the lower compartment. Potential leakage paths exist at all the joints between the operating deck and the pump access hatches and reactor vessel enclosure slabs. The total of all deck leakage flow areas is approximately 5 ft^2. The effect of this potential leakage path is small and is found to be:

ΔP_{deck} = 5 x 0.080 = 0.4 psi

In the event that the reactor coolant system break flow is so small that it would leak through these flow paths without developing sufficient differential pressure (1 lb/ft^2) to open the ice condenser doors, steam from the break would slowly pressurize the containment. The containment spray system has sufficient capacity to maintain pressure well below design for this case.

The Watts Bar Nuclear Plant and the Sequoyah Nuclear Plant are geometrically very similar. Some differences between the two plants, are the design pressure, spray flow rates, and a slight difference in thermal ratings. The fact that the spray flow rate is higher for the Sequoyah plant (4750 gpm versus 4000 gpm) is offset by Watts Bar's higher design pressure (15 psig versus 12 psig). The following discussion presents the deck leakage analysis performed for the Sequoyah plant. The purpose of this analysis is only to show the substantial margin which exists between the design deck leakage of 5 ft^2 and the tolerable deck leakage. The Sequoyah analysis which shows conservatism by a factor of 7, is more than sufficient for this purpose.

The method of analysis used to obtain the maximum allowable deck leakage capacity as a function of the primary system break size is as follows.

During the blowdown transient, steam and air flow through the ice condenser doors and also through the deck bypass area into the upper compartment. For the containment, this bypass, area is composed of two parts, a known leakage area of 2.2 ft^2 with a geometric loss coefficient of 1.5 through the deck drainage holes location at the bottom of the refueling canal and an undefined deck leakage area with a conservatively small loss coefficient of 2.5. A resistance network similar to that used to TMD is used to represent 6 lower compartment volumes each with a representative

portion of the deck leakage, and the lower inlet door flow resistance and flow area is calculated for small breaks that would only partially open these doors. The coolant blowdown rate as a function of time is used with this flow network to calculate the differential pressures on the lower inlet doors and across the operating deck.

The resultant deck leakage rate and integrated steam leakage into the upper compartment is then calculated. The lower inlet doors are initially held shut by the cold head of air behind the doors (approximately one pound per square foot). The initial blowdown from a small break opens the doors and removes the cold head on the doors. With the door differential removed, the door position is slightly open. An additional pressure differential of one pound per square foot is then sufficient to fully open the doors. The nominal door opening characteristics are based on test results.

One analysis conservatively assumed that flow through the postulated leakage paths is pure steam. During the actual blowdown transient, steam and air representative of the lower compartment mixture leak through the holes, thus less steam would enter the upper compartment. If flow were considered to be a mixture of liquid and vapor, the total leakage mass would increase, but the steam flow rate would decrease. The analysis also assumed that no condensing of the flow occurs due to structural heat sinks. The peak air compression in the upper compartment for the various break sizes is assumed with steam mass added to this value to obtain the total containment pressure. Air compression for the various break sizes is obtained from previous full-scale section tests conducted at Waltz Mill.

The allowable leakage area for the following reactor coolant system (RCS) break sizes was determined: DE, 0.6 DE, 3 ft^2, 10 inch diameter, 6 inch diameter, 2.5 inch diameter, and 0.5 inch diameter. The allowable deck leakage area for the DE break was based on the test results previously discussed. For break sizes of 3 ft^2 and 0.6 DE, a series of deck leakage sensitivity studies were made to establish the total steam leakage to the upper compartment over the blowdown transient. This steam was added to the peak compression air mass in the upper compartment to calculate a peak pressure. Air and steam were assumed to be in thermal equilibrium, with the air partial pressure increased over the air compression value to account for heating effects. For these breaks, sprays were neglected. Reduction in compression ratio by return of air to the lower compartment was conservatively neglected. The results of this analysis are shown in Table 6.2.1-14. This analysis is confirmed by Waltz Mill tests conducted with various deck leaks equivalent to over 50 ft^2 feet of deck leakage for the double-ended blowdown rate and is shown in Figure 6.2.1-20.

For breaks of 10 inch diameter and smaller, the effect of containment sprays was included. The method used calculates, for each time step of the blowdown, the amount of steam leaking into the upper compartment to obtain the steam mass in the upper compartment. This steam was mixed with the air in the upper compartment, assuming thermal equilibrium with air. The air partial pressure was increased to account for air heating effects. After sprays were initiated, the pressure was calculated based on the rate of accumulation of steam in the upper compartment.

This analysis was conducted for the 10 inch, 6 inch, and 2 inch break sizes, assuming one spray pump operated (4750 gpm at 100°F). As shown in Table 6.2.1-14, the 10 inch break is the limiting case for this range of break sizes.

A second, more realistic, method was used to analyze the 10 inch, 6 inch, and 2 inch breaks. This analysis assumed a 30% air and 70% steam mix flowing through the deck leakage area. This is conservative considering the amount of air in the lower compartment during this portion of the transient. Operation of the deck fan increases the air content of the lower compartment, thus increasing the allowable deck leakage area. Based on the LOTIC code analysis, a structural heat removal rate of over 6000 Btu/sec from the upper compartment is indicated. Therefore, a steam condensation rate of 6 lbs/sec was used for the upper compartment. The results indicate that with one spray pump operating and a deck leakage area of 50 ft^2, the peak containment pressure is below design pressure.

The 1/2 inch diameter break is not sufficient to open the ice condenser inlet doors. For this break, the upper compartment spray is sufficient to condense the break steam flow.

In conclusion, it is apparent that there is a substantial margin between the design deck leakage area of 5 ft^2 and that which can be tolerated without exceeding containment design pressure. A preoperational visual inspection has been performed to ensure that the seals between the upper and lower containment have been properly installed.

6.2.1.3.6 Mass and Energy Release Data

Long-Term Mass and Energy Releases

Following a postulated rupture of the reactor coolant system (RCS), steam and water is released into the containment system. Initially the water in the RCS is sub-cooled at a high pressure. When the break occurs, the water passes through the break where a portion flashes to steam at the lower pressure of the containment. These releases continue until the RCS depressurizes to the pressure in the containment (end of blowdown). At that time, the vessel is refilled by water from the accumulators and safety injection (SI) pumps. The analysis assumes that the lower plenum is filled with saturated water at the end of blowdown, to maximize steam releases to the containment. Therefore, the water flowing from the accumulators and SI pumps starts to fill the downcomer causing a driving head across the vessel which forces water into the hot core.

During the reflood phase of the accident water enters the core where a portion is converted to steam which entrains an amount of water into the hot legs at a high velocity. Water continues to enter the core and release the stored energy of the fuel and clad as the mixture height in the core increases. When the level, two feet below the top of the core, is reached the core is assumed to be totally quenched which leaves only decay heat to generate steam. This type of break is analyzed at three locations.

The location of the break can significantly change the reflood transient. It is for this reason that the (1) hot leg, (2) pump suction, and (3) cold leg break locations are

analyzed. For a cold leg break, all of the fluid which leaves the core must vent through a steam generator and becomes superheated. However, relative to breaks at other locations, the core flooding rate (and therefore the rate of fluid leaving the core) is low because all the core vent paths include the resistance of the reactor coolant pump. For a hot leg pipe break the vent path resistance is relatively low, which results in a high core flooding rate, but the majority of the fluid which exits the core bypasses the steam generators in venting to the containment. The pump suction break combines the effects of the relatively high core flooding rate, as it in the hot leg break, and steam generator heat addition as in the cold leg break. As a result, the pump suction breaks yield the highest energy flow rates during the post blowdown period. The spectrum of breaks analyzed includes the largest cold and hot leg breaks, reactor inlet and outlet respectively, and a range of pump suction breaks from the largest to 3.0 ft^2. Because of the phenomena of reflood as discussed above, the pump suction break location is the worst case. This conclusion is supported by studies of smaller hot leg breaks which have been shown, on similar plants, to be less severe than the double ended hot leg. Cold leg breaks, however, are lower both in the blowdown peak and in the reflood pressure rise. Thus an analysis of smaller pump suction breaks is representative of the spectrum of break sizes.

The LOCA analysis calculational model is typically divided into three phases which are: 1) blowdown, which includes the period from accident occurrence (when the reactor is at steady state full power operation) to the time when zero break flow is first calculated, 2) refill, which is from the end of blowdown to the time the ECCS fills the vessel lower plenum, and 3) reflood, which begins when water starts moving into the core and continues until the end of the transient. For the pump suction break, consideration is given to a possible fourth phase; that is, froth boiling in the steam generator tubes after the core has been quenched. For a description of the calculational model used for the mass and energy release analysis[9]. As per this model the flowsplit is assumed to be 100% at 1765 seconds for maximum safeguards and 1637 seconds for minimum safeguards.

Basis of the Analysis

(1) Assumptions

The following items ensure that the core energy release is conservatively analyzed for maximum containment pressure.

(a) Maximum expected operating temperature (618.2°F)

(b) Allowance in temperature for instrument error and dead band (+4°F)

(c) Margin in volume (1.4%)

(d) Allowance in volume for thermal expansion (1.6%)

(e) Margin in core power associated with use of engineered safeguards design rating (ESDR)

(f) Allowance for calorimetric error (2% of ESDR)

(g) Conservatively modified coefficients of heat transfer

(h) Allowance in core stored energy for effect of fuel densification

(i) Margin in core stored energy (+20%).

(2) Initial Conditions

Core Power (License Application) (MWt)	3411
Engineered Safeguards Design Rating (ESDR) (MWt)	3579
Vessel/Core Inlet Temperature (T_c) (plus 2% allowance for calorimetric error) (EF)	558.1
Vessel Average Temperature (T_{avg}) (EF)	588.2
Vessel Outlet Temperature (T_h) (EF)	618.2
Steam Pressure (psia)	1000
Rod Array	17xl7
Total Accumulator Mass (1bm)	210,300
Accumulator Temperature (EF)	120
Accumulator Pressure (psia)	600
Assumed Containment Reference Pressure (psia)	26.7
Pumped Injection (assumed)	
Minimum (ft^3/sec)	10.8
Maximum (ft^3/sec)	22.4
Recirculation Time (assumed) (sec)	1455
Long-Term Mass and Energy Release Data	
Blowdown Results	

Table 6.2.1-15 lists the calculated mass and energy releases for the blowdown phase of the various breaks analyzed, with the corresponding break size.

Reflood Results

Table 6.2.1-17 presents the hydraulic parameters used for the reflood analysis. Figures 6.2.1-21 through 6.2.1-25 present the core inlet temperature, the core flooding rate, the carry over fraction, the fraction of flow through the broken loop, and the core and downcomer water levels, respectively, for the double-ended pump suction guillotine with minimum safeguards safety injection. Table 6.2.1-18 lists the table numbers for the calculated mass and energy releases for the reflood chase of the various breaks analyzed along with the corresponding safeguards assumption (maximum or minimum).

Two-Phase Post-Reflood Results

Two froth analyses were performed: a double-ended pump suction (DEPS) guillotine break with maximum safeguards SI flow, and a DEPS break with minimum safeguards SI flow. For both cases the release rates are based on a reference temperature for heat stored in the steam generator secondary fluid equal to saturation temperature corresponding to reference pressure of 20.2 psia. The table below presents a summary of the available secondary side energy for the broken loop and intact loop for both cases.

The heat content of the broken and unbroken steam, generators as a function of time is shown in Figure 6.2.1-26 for the DEPS guillotine break minimum safeguards case.

	Case 1	Case 2
Break	DEPS	DEPS
SI Assumption	Maximum	Minimum
Available Energy of Secondary Mass for Broken Loop Steam Generator (10^6 Btu)	14.9*	16.3*
Available Energy of Secondary Mass for Intact Loop Steam Generators (10^6 Btu)	179.0*	179.7*
Total Available Steam Generator Energy	193.9*	196.0*

* Referenced to 228.0°F.

Tables 6.2.1-20 and 6.2.1-21 present the calculated mass and energy release rate data for a DEPS break using maximum and minimum safeguards assumptions, respectively. These tables completely replace the mass and energy release data after the end of 10-foot entrainment occurs (see Tables 6.2.1-19a and 6.2.1-19b).

Depressurization Energy Release

The froth mass and energy release data presented in Tables 6.2.1-20 and 6.2.1-21 are based on a reference temperature for heat stored in the steam generator metal and secondary fluid of saturation at assumed containment back pressure (20.2 psia) up to the time at which the broken loop steam generator equilibrates.

Since the containment pressure remains above this value until after the time of peak pressure, depressurization energy release need not be calculated until peak pressure has occurred and the pressure returns to 20.2 psia. At this point the energy remaining in the system, presented in Table 6.2.1-22, can be added to the decay heat release by using the equation below:

$$\dot{q} = \frac{q_{total} \bullet \Delta T / \Delta t}{\Delta T_{total}}$$

$\dot{q}$= heat release rate (Btu/sec)
q_{total}= total available heat from Table 6.2.1-22 (Btu)
$\Delta T/\Delta t$= rate of temperature change (°F/sec)
ΔT_{total}= initial temperature differential (16°F)

Short-Term Mass and Energy Releases

The short-term mass and energy release models and assumptions are described in Reference [9]. The LOCA short-term mass and energy release data used to perform the containment analysis given in Sections 6.2.1.3.4 and 6.2.1.3.9 are listed below:

Section	Break Size and Location	Table
6.2.1.3.4	Double-Ended Cold Leg Guillotine Break Outside the Biological Shield	6.2.1-23
6.2.1.3.4	Double-Ended Hot Leg Guillotine Break Outside the Biological Shield	6.2.1-24
6.2.1.3.9	Double-Ended Pressurizer Spray Line Break	6.2.1-28
6.2.1.3.9	127 in^2 Cold Leg Break at the Reactor Vessel	6.2.1-30

6.2.1.3.7 Accident Chronology

For a double-ended pump suction loss-of-coolant accident, the major events and their time of occurrence are shown in Table 6.2.1-25 for the minimum safeguards case.

6.2.1.3.8 Energy Balance Tables

Tables 6.2.1-26a through 6.2.1-26f give the initial energy distribution as well as the energy distribution at end of blowdown and end of reflood for various break locations and sizes. The release rate transients for this case are consistent with the 10 foot entrainment calculation.

6.2.1.3.9 Containment Pressure Differentials

Consideration is given in the design of the containment internal structures to localized pressure pulses that could occur following a loss-of-coolant accident. If a loss-of-coolant accident were to occur due to a pipe rupture in these relatively small volumes, the pressure would build up at a rate faster than the overall containment, thus imposing a differential pressure across the walls of the structures.

These subcompartments include the steam generator enclosure, pressurizer enclosure, and upper and lower reactor cavity. Each compartment is designed for the largest blowdown flow resulting from the severance of the largest connecting pipe within the enclosure or the blowdown flow into the enclosure from a break in an adjacent region.

The following paragraphs summarize the design basis calculations:

Steam Generator Enclosure

The worst break possible in the steam generator enclosure is a double-ended rupture of the steamline pipe at no load conditions. Based on an investigation of postulated break locations, the rupture is assumed to occur at the point where the steamline exits the steam generator. The blowdown for this break is given in Table 6.2.1-27a. The TMD computer code using the compressibility factor and assuming unaugmented critical flow is used to calculate the short-term pressure transients. The nodalization of the steam generator enclosure where the break occurs is shown in Figure 6.2.1-81. Node 51 is the break element and has a flow path to the adjacent steam generator enclosure which is a mirror image of the enclosure where the break occurs. Both enclosures are nodalized in the same manner; their nodal network is shown in Figure 6.2.1-82 and their input data is given in Tables 6.2.1-27b and 6.2.1-27c. This input data assumes that the insulation remains intact. The loss coefficients were computed using Reference [12]. The maximum number of nodes used is based on the geometry of the system. The steam generator compartment is essentially symmetrical with no major obstructions to flow which would introduce asymmetric pressures. In addition, the flow path to the adjacent steam generator is at the top of the enclosure. Therefore, a significant differential pressure will not occur across the steam generator vessel. The balance of plant data is similar to that presented in Section 6.2.1.3.4.

The peak pressure differentials across the steam generator enclosure, the steam generator vessel, and the steam generator separator wall are given in Table 6.2.1-27d. Figure 6.2.1-83 shows the differential pressure transient between the break element and the upper compartment (Node 25). Figures 6.2.1-84 and 6.2.1-85 illustrate the differential pressure transient across the steam generator vessel. As Figures 6.2.1-84 and 6.2.1-85 show, the pressure differentials across the vessel are low and are due solely to inertial effects. These are overpredicted in our analysis since changes in break flowrates are assumed to be instantaneous. The pressure vs time curve for the break element is given in Figure 6.2.1-86 and for the upper compartment (Node 25) in Figure 6.2.1-86a.

Pressurizer Enclosure

The worst break possible in the pressurizer enclosure is a double-ended rupture of the six-inch spray line. The rupture is assumed to occur at the top of the enclosure. The blowdown for this break is given in Table 6.2.1-28. The TMD computer code using the compressibility factor and assuming unaugmented critical flow is used to calculate the short-term pressure transient. The nodalization of the enclosure is shown in Figure 6.2.1-87. Node 51 is the break element. The input data is given in Table 6.2.1-29. This input data assumes that the insulation remains intact. The loss coefficients were

computed using Reference [12]. The maximum number of nodes used was based on the geometry of the system. The pressurizer compartment is essentially symmetrical with no major obstructions to flow which would introduce asymmetric pressures on the pressurizer vessel. The balance of plant data is similar to that presented in Section 6.2.1.3.4.

The peak pressure differentials across the pressurizer enclosure's walls, and across the pressurizer vessel are given in Table 6.2.1-29a. Figure 6.2.1-88 shows the pressure transient between the break element and the upper compartment (Node 25). As Figures 6.2.1-89 through 6.2.1-91 show, the significant pressure differential across the vessel are low, occur early, and are due solely to inertial effects. The pressure vs. time curve for the break element is given in Figure 6.2.1-92.

Reactor Cavity

The TMD computer code with the unaugmented homogeneous critical flow correlation and the isentropic compressible subsonic flow correlation was used to calculate pressure transients in the reactor cavity region.

Nodalization sensitivity studies were performed before the analysis was begun. The total number of nodes used varied from 6 to 68. In the 6-element model, no detail of the reactor vessel annulus was involved, and for that reason the model was discarded. Subsequent model changes primarily involved greater detail in the reactor vessel annulus. First, the annulus was divided into two vertical and eight circumferential regions. Next, some additional detail was added to the region of the broken nozzle. The next changes were effected by increasing the model to three vertical and eight circumferential regions. The total integrated pressure in the reactor cavity changed only slightly because of the last change. The next change, to 68 elements, produced the model shown with detailed modeling around the nozzle sustaining the break. The additional elements from 48 to 52 are external to the reactor cavity (ice condenser). Additional elements were added to account for all real area changes in the immediate vicinity of the break (i.e., Elements 53 and 54 were added to model the broken loop pipe annulus and the broken loop inspection port, respectively).

The nodal scheme around the reactor vessel produces a very accurate post accident pressure profile because of its design. Element 3 is a small element inside the primary shield. It would contain internal flow losses due to turning and thus contain a pressure gradient if it were made larger. The four elements numbered 33, 34, 45, and 46 are made small to minimize internal pressure variation, and the elements farther from the break are made larger because pressure gradients are low in those regions.

Figure 6.2.1-27 illustrates the positions of some of the compartments. Figure 6.2.1-28 shows the flow path connections for the 68 element model. Figure 6.2.1-29 illustrates the general configuration of the reactor vessel annulus nodalization. In the model, the lower containment is divided into four loop compartments (21 to 24). The upper containment is represented by Compartment 32. The ice condenser is modeled as five elements (48 to 52), neglecting any flow distribution effects. The break simultaneously occurs in Elements 1 and 25, immediately surrounding the nozzle. The corresponding broken loop pipe annulus is represented by Element 53. The lower reactor cavity is

modeled by Element 2, the upper reactor cavity by Element 47, and the remainder of the elements, as shown in Figure 6.2.1-29, model the reactor vessel annulus. Compartments 15, 42, and 16 are really adjoining Compartments 17, 43, and 18, respectively, and Compartment 13 is on the opposite side of the vessel from the assumed break. Element 54 represents the inspection port volume above the break.

A break limiting restraint restricts the break size. A 127 in^2 cold leg break is the limiting case break for the reactor cavity analysis. The mass and energy release rates are presented in Table 6.2.1-30. Tables 6.2.1-31 and 6.2.1-32 provide the volumes, flow paths, lengths, diameters, flow areas, resistance factors, and area ratios for the elements and their connections.

The inspection port plugs were assumed to be removed at the start of the accident. All insulation is assumed in place and uncrushed during the entire transient except for the insulation between the break and the reactor vessel annulus. This insulation was conservatively assumed to crush to zero thickness.

The loss of coefficient (k) values were determined by changes in flow area and by turns the flow makes in traveling from the centroid of the upstream node to the centroid of the downstream node. The k and f factors for each path were determined using methods from such references as "Flow of Fluids through Valves, Fittings, and Pipes" by the crane company and "Chemical Engineering" by J. M. Coulson and J. A. Richardson.

Figures 6.2.1-30 through 6.2.1-68 show representative pressure transients for the break compartments, the upper and lower reactor cavities, the inspection port volume and pipe annulus near the break, the upper containment and the reactor vessel annulus. These plots demonstrate that the pressure gradient is steep near the break location and is very gradual farther away from the break. This indicates that the model must be very detailed close to the break location, but less detail is required with increasing distance.

6.2.1.3.10 Steam Line Break Inside Containment

Pipe Break Blowdowns - Spectra and Assumptions

A series of steam line breaks were analyzed to determine the most severe break condition for containment temperature and pressure response. The following assumptions were used in these analysis:

(1) The following break types were evaluated:

(a) Double-ended 4.6 ft^2 ruptures occurring at the nozzle on one steam generator. Steam line flow restrictions in the stream generators limit the

effective break area of a full double-ended pipe rupture to a maximum of 1.4 ft^2 per steam generator.

(b) The largest split break which will not generate the low steamline pressure signal for steamline isolation.

(c) Small split breaks of 0.6, 0.35, and 0.1 ft^2.

(2) Steam line isolation signals and feedwater line isolation signals are generated by either a low steam line pressure signal, high-high containment pressure signal, or high steam line pressure rate signal. An allowance of 8 seconds is implicitly assumed for steam line isolation including generation, processing, and delay of the isolation signal and valve closure. An allowance of 8 seconds is implicitly assumed for feedwater line isolation including generation, processing, and delay of the isolation signal and valve closure.

(3) Failure of a diesel generator is assumed in all cases. This results in the loss of one containment safeguards train resulting in minimum heat removal capability.

(4) Blowdown from the broken steam line is assumed to be dry saturated steam.

(5) Plant power levels of 102% and zero of nominal full-load power for DER, and split pipe ruptures at 30% of nominal full-load power.

(6) Failure of a feedwater isolation valve (FIV) or control valve (FCV), failure of auxiliary feedwater runout control protection, and failure of a safety injection train are considered.

(7) Four cases for each double-ended rupture and power level scenario are evaluated. One case each models the feedwater isolation valve failure, feedwater control valve failure, and auxiliary feedwater runout control protection failure, individually. The fourth case assumes no single failure in the plant steam system.

(8) The auxiliary feedwater system is manually realigned by the operator after 10 minutes to terminate AFW to the faulted steam generator.

(9) For the full double-ended ruptures, the main feedwater flow to the steam generator with the broken steam line was calculated based on an initial flow of 100% of nominal full power flow and a conservatively rapid steam generator depressurization. The peak value of this flow occurring just prior to isolation is 326% of nominal.

(10) An allowance is added to the mass and energy released from the break to account for steam from the main steam lines which could flow out of the break if the main steam isolation valve in the steam line with the break fails to close.

Break Flow Calculations

(1) Steam Generator Blowdown

Break flows and enthalpies from the steam generators are calculated using the Westinghouse LOFTRAN code[14]. Blowdown mass and energy release are determined using the LOFTRAN code which includes effects of core power generation, main and auxiliary feedwater additions, engineered safeguards systems, reactor coolant system thick metal heat storage, and reverse steam generator heat transfer.

(2) Steam Plant Piping Blowdown

The contribution to the mass and energy releases from the secondary plant steam piping is included in the mass and energy release rates presented in Table 6.2.1-39. For all ruptures, the steam piping volume blowdown begins at the time of the break and continues at a uniform rate until the entire piping inventory is released. The flowrate is determined using the Moody correlation, the pipe cross-sectional area, and the initial steam pressure. Following the piping blowdown, reverse flow from the intact steam generators continues to simulate the reverse steam generator flow until steam line isolation.

Single Failure Effects

(1) Failure of a feedwater isolation valve could only result in additional inventory in the feedwater line which would not be isolated from the steam generator. The mass in this volume can flush into the steam generator and exit through the break. The feedwater regulating valve closes in no more than 6.5 seconds precluding any additional feedwater from being pumped into the steam generator. The additional line volume available to flush into the steam generator is that between the feedwater isolation valve and the feedwater regulating valve, including all headers and connecting lines.

(2) Failure of a feedwater regulating valve to operate properly can result in an increased feedwater flow into the steam generator and exit through the break. Feedwater isolation valve closure limits the feedwater addition to the steam generator.

(3) Failure of the auxiliary feedwater runout control equipment would result in higher auxiliary feedwater flows entering the steam generator prior to realignment of the auxiliary feed system. For cases where the runout control operates properly, a constant auxiliary feed flow of approximately 1,500 gpm was assumed. This value was increased to approximately 2,250 gpm for the 100% and 0% power cases and 2040 gpm for the 30% power cases to simulate a failure of the runout control.

(4) Failure of a safety injection train results in less SI flow and will result in a greater return to power. For consistency, the steam line break core response analysis, in all cases, conservatively assumes failure of a safety injection train.

(5) Failure to the main steam isolation valve (located outside of containment) in the steam line with the break allows steam from all four main steam lines (downstream of the other main steam isolation valves which close) to flow out the break. The analysis accounts for this effect by including an allowance for additional mass and energy released through the break due to the volume of steam contained in the main steam lines. No additional steam is released through the break if the postulated single failure is a main steam isolation valve in another steam line not closing. In this case, the main steam isolation valve in the broken steam line does close and there is no backflow from the downstream piping to the break.

Worst-Case Mass and Energy Releases

The following steam line break cases were determined to represent the worst case steamline break results:

(1) Full double-ended rupture at 102% of nominal full power with a failure of the runout control system. This represents the limiting DER case in terms of calculated peak temperature.

(2) A 0.6 ft^2 split break at 30% of nominal full power with a failure of the runout control system. This represents the limiting SB case in terms of calculated peak temperature.

(3) A 0.35 ft^2 split break at 30% at nominal full power with a failure of the runout control system. This represents the limiting case SB case in terms of superheat temperature duration.

Mass and energy releases for these cases are listed in Table 6.2.1-39.

Maximum Containment Temperature Analysis for Steam Line Break

Following a steam line break in the lower compartment of an ice condenser plant, two distinct analyses must be performed. The first analysis, a short-term pressure analysis, has been performed with the TMD computer code (see Section 6.2.1.3.9). The second analysis, a long-term analysis, does not require the large number of nodes which the TMD analysis requires. The computer code which performs this analysis is the LOTIC computer code.

The LOTIC-3 computer code was developed to analyze steamline breaks in an ice condenser plant. Details of the LOTIC-3 computer code are given in References [1], [2], and [3]. It now includes the capability to calculate superheat conditions, and has the ability to begin calculations from time zero[17]. The LOTIC-3 computer code has been found to be acceptable for the analysis of steam line breaks[16],[18] with the following restrictions:

(1) Mass and energy release rates are calculated with an approved model.

(2) Complete break spectrums are analyzed.

(3) Convective heat flux calculations, as described in Reference [2], are performed for all break sizes.

Two separate condensation models are used by the LOTIC-3 computer. The 100% condensate reevaporization model is used for large breaks. For small breaks, the conservative 0% condensate reevaporization and convective heat flux models are used. As pointed out in previous LOTIC-3 submittals[16],[17],[18], this position is felt to be justified. However, it has also been shown that the small steam line break temperature transients are more severe than large break transients, even if the large break calculations assume no reevaporization of the condensate heat flux[3].

Containment Transient Calculations

The following are the major input assumptions used in the LOTIC-3 steam line break analysis for the Watts Bar Nuclear Plant:

(1) Minimum safeguards are employed, e.g., one of two spray pumps, and one of two air return fans.

(2) A quantity of 2.125×10^6 lbs of ice is assumed for the DER cases, and 2.025×10^6 lbs of ice is conservatively assumed for the small split cases, to be initially in the ice condenser.

(3) The boron injection tank remains installed without heat tracing, and the boric acid concentration is reduced to zero ppm (Table 6.2.1-40).

(4) The air return fan is effective 10 minutes after the transient is initiated. Actual air return fan initiation can take place in 9+1 minutes. Initiation as early as 8 minutes does not adversely affect the outcome of the analysis.

(5) A uniform distribution of steam flow into the ice bed is assumed.

(6) The initial conditions in the containment are a temperature of 120°F in the lower compartment, 120°F in the dead-ended compartment, a temperature of 85°F in the upper compartment, and a temperature of 15°F in the ice condenser. All volumes are at a pressure of 0.3 psig (see Table 6.2.1-13).

(7) A containment spray pump flow of 4,030 gpm is conservatively used in the upper compartment. A diesel loading sequence for the containment sprays to energize and come up to full flow and head in 135 seconds was used in the analysis. As discussed in the Section 6.2.1.3.2 list of assumptions, subsequent analysis has changed the loading sequence to 221 seconds. However, this does not significantly affect the results obtained with the 135 second delay time utilized. It is also noted that the calculated CSS flow rate

is 4,650 gpm, which bounds the 4,030 gpm flow rate used in the analysis and, being conservative, offsets any effect due to the loading sequence delay change.

(8) Containment structural heat sinks as presented in Table 6.2.1-1 were used. The material properties are given in Table 6.2.1-5.

(9) The air return fan empties air at a rate of 40,000 ft^3/min from the upper to the lower compartments. The total calculated air flow rate discharged to the dead-end compartment used is 41,885 cfm and is, therefore, bounded.

(10) A series of large break cases (1.4 - 4.6 ft^2 double-ended ruptures) were run to determine the limiting large break case (Table 6.2.1-41). In addition, a series of small breaks were analyzed with LOTIC at the 30% power level (Table 6.2.1-42).

(11) The mass and energy releases for the limiting breaks are given in Table 6.2.1-39. Since these rates are considerably less than the RCS double-ended breaks and their total integrated energy is not sufficient to cause icebed meltout, the containment pressure transients generated for the RCS breaks will be more severe. However, since the steam line break blowdowns are superheated, the lower compartment temperature transients calculated in this analysis will be limited. These temperature transients are given in Figures 6.2.1-69 through 6.2.1-74.

(12) The heat transfer coefficients to the containment structures are based on the work of Tagami. An explanation of their manner of application is given in Reference [3]. The stagnant heat transfer coefficients were limited to 72 Btu/hr-ft^2. This corresponds to a steam-air ratio of 1.4 (according to the Tagami correlation). The imposition of this limitation is to restrict the use of the Tagami correlation within the range of steam-air ratios from which the correlation was derived.

The containment responses presented identifies the limiting and most severe cases for the large double-ended ruptures and small split breaks.

Large Break

The limiting case among the double-ended ruptures, which yielded a calculated peak temperature of 290.5°F and a peak pressure of 9.4 psig, is the 1.4 ft^2 loop break at 102% of nominal full power with a failure in a main feedwater control valve. Figure 6.2.1-69 provides the upper and lower compartment temperature transients, and Figure 6.2.1-70 illustrates the lower compartment pressure transients. Table 6.2.1-39 contains the mass and energy release rates for the above case.

Small Break

The most severe transient in terms of superheat temperature duration for the small break spectrum is the .35 ft^2, 30% nominal full power, with AFW pump runout protection failure. The temperature transient with a peak temperature of 324.86°F and

peak pressure of 6.33 psig for the case is presented in Figure 6.2.1-71, and the pressure transient is provided in Figure 6.2.1-72. Table 6.2.1-39 provides the mass and energy release rates for this case.

The most limiting case in terms of peak calculated temperature is the 0.6 ft^2, 30% power, with AFW pump runout protection failure case. This case resulted in a calculated peak temperature of 325.4°F and peak pressure of 6.97 psig. Figure 6.2.1-73 presents the temperature transient, and Figure 6.2.1-74 shows the pressure transient of the lower compartment. The mass and energy releases are provided in Table 6.2.1-39.

Tables 6.2.1-43 and 6.2.1-44 provide the overall results of the calculated peak temperatures for the large and small break spectrums, respectively.

6.2.1.3.11 Maximum Reverse Pressure Differentials

Following a postulated pipe break accident, the occurrence inside the ice condenser containment may be characterized by two distinct periods:

(1) The initial blowdown, which occurs in approximately 10 seconds. During this period, the air initially in the lower compartment is swept into the upper compartment and the dead-ended compartment by the blowdown mass. Large mass and pressure gradients occur throughout the containment.

(2) The depressurization and post-blowdown period which occurs after the end of the initial blowdown. During this period the pressure gradient within the four compartments (upper, lower, ice condenser, and dead-ended) is almost nonexistent. The shape of the pressure transient resembles that of the mass and energy releases. Pressure decreases as blowdown diminishes, followed by a slow increase sometime during the reflood.

The analysis for the first period will usually require the modeling of the containment into many nodes so that the non-uniformity of pressure and mass distribution may be properly represented. This has been done in the TMD code.

On the other hand, the analysis for the second period will only require the modeling of the containment by a four-compartment system. These calculations are performed by the LOTIC code[1].

The code options and features discussed are used in calculating ECCS back-pressure and reverse pressure differentials across the operating deck.

Basic Assumptions

(1) The containment is assumed to be physically divided into four compartments: upper, lower, ice condenser, and dead-ended compartments. Each compartment is a control volume of uniform temperature, pressure and mass distribution. Steam is also assumed to be saturated in each control volume.

(2) Flow between compartments is related to the pressure differential between the compartments by a flow resistance factor.

(3) A two-sump model is assumed. Temperature is considered to be uniform in each sump.

Conservation Equations

For each control volume or compartment, the conservation equations of mass, energy, momentum, and volume, an ideal gas law for air, and the equation of state for saturated steam may be written:

(1) Energy equation:

$$\frac{d}{dt}(M_a h_a + M_s h_s + M_c h_c) - \frac{V_{as} + V_c}{J} \quad \frac{d(P_s + P_a)}{dt} + (mh)_{out} - (mh)_{\varepsilon} = R_e$$

For the lower compartment:

R_e = [Rate of energy out of break]

+ [Rate of flow energy from accumulator in the form of steam, water, and nitrogen]
- [Rate of structural heat removal]
- [Rate of flow energy of sprays if applicable]
- [Rate of heat transfer to the sump]
- [Rate of heat removal by the ice condenser drain flow, if acting as a spray]
- [Rate of energy associated with the loss on condensate from atmosphere falling to floor]
+ [Net rate of flow energy from the dead-ended compartment]

For the upper compartment:

R_e = [Flow energy of the entering spray]

- [Structure heat removal rate]
- [Energy rate associated with condensate falling from atmosphere]

For the ice condenser:

R_e =[Structure heat removal rate]

- [Rate of heat transfer to the ice]
- [Energy rate associated with ice melt and steam condensate falling from atmosphere]

(2) Conservation of steam and water masses:

$$\frac{dM_s}{dt} + \frac{dM_c}{dt} + (M_s)_{out} - (M_s)_{in} = R_s$$

For the lower compartment:

R_s = [Rate of flow out of the RCS]

+ [Rate of flow out of the accumulator in the form of steam and water]
+ [Flow rate of the entering spray if applicable]
- [Rate of condensate falling to the floor]
+ [Rate of steam flow from the dead-ended compartment]

For the upper compartment:

R_s = [Flow rate of the entering spray]

- [Rate of condensate falling to the floor]

For the ice condenser:

R_s = - [Rate of condensate falling to the floor]

(3) Conservation of air mass:

$$\frac{dM_a}{dt} + (M_a)_{out} - (M_a)_{in} = R_a$$

For the lower compartment:

R_a = [Rate of nitrogen flow out of the accumulator]

+ [Rate of air flow out of the dead-ended compartment]

For the upper compartment and the ice condenser:

$R_a = 0$

(4) Conservation of momentum:

$$P_i - P_j = \frac{1}{2}\left(\frac{K_{ij}}{A^2}\right)\frac{M_{ij}^{\ 2}}{\rho g_c}$$

(5) Volume conservation:

$$\frac{dV_{as}}{dt} + \frac{dV_c}{dt} = R_v$$

For the lower compartment:

R_v = [Rate of increase in sump water volume]

For the upper compartment:

$$R_v = 0$$

For the ice condenser:

R_v = [Rate of increase in free volume due to ice melting]

(6) Ideal gas law for air:

$$P_a V_{as} = M_a R_a T$$

(7) Equations of state for saturated steam:

$$P_s = f_1(T),\ h_s = f_2(T),\ v_s = f_3(T)$$

For the dead-ended compartment, the structure heat removal is assumed to be negligible, and the conservation equations of energy and mass simplified to:

$$\frac{d}{dt}(M_a h_a + M_s h_s) - \frac{v}{J}\frac{d(P_s + P_a)}{dt} = \text{[Rate of energy flow from the lower compartment]}$$

$$\frac{(dM_a)}{(dt)} = \text{[Rate of air flow from the lower compartment]}$$

$$\frac{(dM_s)}{(dt)} = \text{[Rate of steam flow from the lower compartment]}$$

Method of Solution

The preceding equations were linearized and programmed for simultaneous solutions using the standard Gauss-Jordan reduction method. For each time step, the solutions are the rates of increase of mass and pressure for each constituent in each compartment, and the flow rates between the compartments. These rates are used to

control the time step so that total change of the compartment conditions in each time step can be controlled. This assures more accurate and stable solutions.

Structure Heat Transfer

The standard Westinghouse ECCS containment structural heat transfer model is applied to this code. This model assumes one dimensional conduction heat transfer in the structure and uses film heat transfer coefficient based primarily on the work of Tagami. The Tagami correlation for the film heat transfer may be written as:

$$H_{max} = 75\left[\frac{E}{t_p V}\right]^{0.6} \qquad (1)$$

$$H = H_{max} = \frac{\sqrt{t}}{t_p} \quad \text{for } 0 \le t \le t_p \qquad (2)$$

$$H = H_{stag} + [H_{max} - H_{stag}]e^{-0.5[t - t_p]} \quad \text{for } t_p \le t \qquad (3)$$

where:

$$H_{stag} = 2 + 50\ X \qquad (4)$$

For this application, we have found it is useful to relate the "coolant energy transfer", (E/t_pV), to containment conditions. This may be done by writing:

$$\frac{E}{t_p V} = \frac{M_s \bar{h}_s + M_f \bar{h}_f}{t_p V} = \frac{1}{t_p v_s}\left(\overline{h_s} + \frac{M_f}{M_s} - \overline{h_f}\right) \qquad (5)$$

where:

h_s, h_f and u_s are respectively the enthalpies of saturated steam and water, and the specific volume of steam, at t_p, the time when the peak containment pressure is reached.

Equations (1) through (5) are used for the lower compartment structure calculations. For the upper compartment, only the stagnant heat transfer correlation of Equation (4) is used because of little steam penetration into the upper compartment even during the initial blowdown period.

Ice Condenser Heat Transfer

The transfer of heat from steam to ice which results in the simultaneous occurrence of steam condensation and ice melting is a complex mechanism.

During the initial blowdown period when high temperature blowdown steam and water hits the bottom of ice columns, and then flows over the ice surface, turbulent condensation results. During this period the heat transfer rate is strongly dependent on the thickness of the liquid film which separates the high temperature blowdown masses from the ice. This liquid film is composed of steam condensate and ice melt. On the macroscopic scale, this is the only heat transfer resistance and the effectiveness of the ice condenser is determined by the rate which this liquid film may be withdrawn. A semi-empirical model for the ice condenser heat transfer during this period is available and has been used successfully in the TMD code. The LOTIC code is not intended to duplicate this effort. Instead mass and energy balances are used to calculate the total ice melting during this period. Following the initial blowdown period, there is a transition period when the blowdown mass and energy rates are decreasing rapidly and the containment atmosphere as a whole is losing internal energy. Depressurization and decreasing compartment temperature generally characterize this transition period. As the containment conditions lapse into a much more stable and slowly changing pace after the transition period, the blowdown from the broken pipe is almost drawing to and end. Flow in the ice condenser is now at a rate which is almost negligible compared to that in the initial blowdown period. Temperature in the ice condenser atmosphere has also decreased. Thus, heat transfer is governed by combining natural convection and steam diffusion through an almost stagnant atmosphere. Due to the large air content, the resistance to diffusion is large. Therefore, most of the temperature difference between the free-steam steam-air mixture and the ice occurs between the free-steam and the free surface of the liquid film. Temperature difference across the liquid film is now comparatively small. Due to the loss of dominance for the liquid film resistance in the overall heat transfer mechanism, it is not surprising for Yen, Zender, Zavohik, and Tien[11] to conclude that ice melting has very little effect on the overall heat transfer coefficient for condensation-melting heat transfer in the presence of a substantial air concentration. From this, we may therefore treat the ice as if it were simply a cold structure and use Equation (4) to calculate the heat transfer coefficient after the transition period.

During the transition period, it is plausible to assume that the ice condenser is capable of maintaining its internal energy by condensing any excess energy which flow into the ice condenser.

Special Code Capabilities in Response to Previous NRC Concerns

(1) Heat removal from the lower compartment by the ice condenser drain may be accounted for by input of a spray-like efficiency.

(2) Heat transfer between the lower compartment atmosphere and the sump surface can also be taken into account.

Drains are provided at the bottom of the ice condenser compartment to allow the melt/condensate water to flow out of the compartment during a loss of coolant accident. In the modified LOTIC code, a calculation of the flow rate at which water leaves these ice condenser drains is included. The solution was reached by using the hydraulic incompressible flow equations commonly found in the literature for both filled pipe flow and fall (weir) flow conditions and at any point in time using the minimum flow rate calculated by the two methods. The filled pipe flow equation employed was a simplified Bernoulli balance:

$$Z = \frac{V_2^2}{2g} + h_f + Z_2$$

where:

Z = Elevation

V = Velocity

g = Gravitational constant

ρ = Density

$h_f = \frac{fl}{sd} \bullet \frac{V_2^2}{2} g$

Subscripts 1 and 2 represent conditions at the inlet and outlet of the drain, respectively.

The area of the ice condenser sump was taken to be 3170 ft^2, and the height of the door sill to be 8.75 inches. After calculating the velocity from the previous equation, the mass flow rate can be calculated from

$$\dot{m} = \rho V_2 A_2$$

Since a filled pipe flow condition may not exist during the entire post accident transient, a calculation of the draining rate based on the existence of a fall flow phenomena was included. The corresponding equations are outlined below,

$$Q = \frac{2}{3} 2g(H_e^{3/2} - h_1^{3/2})$$

where:

Q = Discharge per foot of width (ft^3/sec-ft)

H_e = Energy of fluid upstream of the fall

h_1 = Energy of the fluid at the fall edge minus the flowing height

$D_1 = 0.643\ D_c$

$h_1 = H_e - D_1$

By assuming the approach velocity equals zero and through substitution, we arrive at the simplified equation:

$$Q = \frac{2}{3}\ 2g\ [D_c^{3/2} - (0.357\ D_c)]^{3/2}$$

or

$$Q = 4.2088\ D_c^{3/2}$$

where:

D_c = ft.

Calculation of Maximum Reverse Pressure Differential

The computer model previously described was used to calculate the reverse differential pressure across the operating deck. In order to calculate a maximum reverse differential pressure the following assumptions were made:

(1) The dead-ended compartment volumes adjacent to the lower compartment (fan and accumulator rooms, pipe trenches, etc.) were assumed to be swept of air during the initial blowdown. This is a very conservative assumption, since this will maximize the air mass forced into the upper ice bed and upper compartment thus raising the compression pressure. In addition, it will minimize the mass of the noncondensables in the lower compartment. With this modeling the dead-ended volume is included with that of the lower compartment (see Figure 6.2.1-75), resulting in a 3-volume simulation of the containment.

(2) The minimum containment temperatures are assumed in the various subcompartments. This will maximize the air mass forced into the upper containment. It will also increase the heat removal capability of the cold lower compartment structures.

(3) An RWST temperature of 100°F is assumed. This will help raise the upper containment temperature and pressure higher for a longer period of time.

(4) The upper containment spray flowrates used were runout flows.

(5) Containment spray to the upper compartment was assumed to start at 25 seconds. An early start time is conservative in that it raises the upper compartment temperature and pressure when the air mass in the upper compartment is at its highest value.

(6) The containment geometry is the same as that used in the minimum pressure analysis for ECCS purposes. (See Tables 6.2.1-33 through 6.2.1-36.)

(7) The Westinghouse ECCS model (see WCAP-8339) was used for heat transfer to the structure.

(8) The mass and energy releases used are based on the analysis presented in WCAP-8479.

(9) Ice condenser doors are assumed to act as check valves, allowing flow only into the ice condenser.

(10) The loss coefficient (k/A^2) of the deck fins for air flow from the upper to the lower compartment was taken to be 0.0072 ft^{-4}. This value was based on the capabilities of the fans while running. With the fans not running the loss coefficient would be 0.0278 ft^{-4}.

With these assumptions the maximum reverse pressure differential across the operating deck was calculated to be 0.65 psi. The following plots have been provided:

Figure 6.2.1-76 which shows upper and lower compartment pressures.

Figure 6.2.1-77 which shows upper and lower containment temperatures.

Figure 6.2.1-78 which shows upper to lower containment flowrates.

Parametric studies have been made with this model. Various effects have been investigated to determine changes in the maximum reverse pressure differential. Table 6.2.1-37 gives some of these studies with their results. For Case 6, Figures 6.2.1-79 and 6.2.1-80 give plots similar to Figures 6.2.1-76 and 6.2.1-77. Presented in Table 6.2.1-38, also for Case 6, are the sump temperature and the steam exit flow from the ice condenser, both as a function of time.

Significant margin exists between the design reverse differential pressures, TVA's Scope psi and 8.6 psi across the operating and the ice condenser lower inlet doors, respectively, and those calculated pressures presented in Table 6.2.1-37.

Nomenclature

SYMBOL	DESCRIPTION
A	Flow area
E	Total energy
J	Conversion constant, 778 ft-lbf/Btu
K	Flow resistance factor
M	Mass
P	Pressure

SYMBOL	DESCRIPTION
R	Gas constant
R	Rate
T	Temperature
V	Volume
g_c	Conversion constant, 32.2 ft-lbm/lbf-sec^2
h	Enthalpy
m	Mass flow rate between two compartments
t	Time
x	Steam-air ratio
v	Specific volume
ρ	Density

SUBSCRIPT

a	Air
as	Air and steam
c	Suspended or entrained water
e	Energy
i	i-th compartment
j	j-th compartment
ij	from i-th compartment to j-th compartment
s	Steam

REFERENCES

(1) Grimm, N. P., Colenbrander, B. G. C., "Long Term Ice Condenser, Containment Codes - LOTIC Code", WCAP-8354-P-A (Proprietary), July 1974, and WCAP-8355-A (Non-Proprietary), July 1974.

(2) "Final Report Ice Condenser Full Scale Section Test at the Waltz Mill Facility", WCAP-8282 (Proprietary), February 1974, WCAP-8211 and Appendix (Non-Proprietary), May 1974.

(3) Hsieh, T., and Raymond, M., "Long Term Ice Condenser Containment Code - LOTIC Code", WCAP-8354-P-A Supplement 1 (Proprietary), June 1975, and WCAP-8355-A Supplement 1 (Non-Proprietary), June 1975. Hsieh, T.,

and Liparulo, N. J., "Westinghouse Long Term Ice Condenser Containment Code - LOTIC-III Code," WCAP-8354-P-A Supplement 2 (Proprietary), February 1979.

(4) Salvatori, R. (approved), "Ice Condenser Containment Pressure Transient Analysis Method," WCAP-8078, March 1973.

(5) Salvatori, R. (approved), "Ice Condenser Full-Scale Section Test at the Waltz Mill Facility," WCAP-8110, Supplement 6, May 1974.

(6) Deleted by Amendment 85.

(7) Deleted by Amendment 85.

(8) Deleted by Amendment 85.

(9) R. M. Shepard, et al, "Westinghouse Mass and Energy Release Data for Containment Design," WCAP-8312-A, August 1975.

(10) Deleted by Amendment 85.

(11) Yen, Y. C., Zender, A., Zavohik, S. and Tien, C., "Condensation - Melting Heat Transfer in the Presence of Air," Thirteenth National Heat Transfer Conference, AICHE - ASME Denver.

(12) Crane Technical Paper #410, "Flow of Fluid."

(13) "Electrical Hydrogen Recombiner for PWR Containments," WCAP-7709-P-A (Proprietary) and WCAP-7820-A (Non-Proprietary) and Supplements 1, 2, 3, and 4.

(14) Burnett, T. W. T., McIntyre, C. J., Buker, J. C., and Rose, R. P., "LOFTRAN Code Description," WCAP-7907 (Proprietary), June 1972, WCAP-7907-A (Non-Proprietary), April 1984.

(15) King, H. W., "Handbook of Hydraulics," 4th Edition, 1954.

(16) Eicheldinger, C., Westinghouse letter NS-CE-1626 to the NRC dated 12/7/77, Responses to NRC Staff Questions Concerning LOTIC-3 Computer Code.

(17) Eicheldinger, C., Westinghouse letter NS-CE-1250 to the NRC dated 10/22/76, Supplemental Information on the Ice Condenser, Computer Code LOTIC-3.

(18) Eicheldinger, C., Westinghouse letter NS-CE-1453 to the NRC dated 6/14/77, Responses to NRC Staff Questions Concerning LOTIC-3 Computer Code.

(19) US NRC Regulatory Guide 1.7, Rev. 2, November 1978, "Control of Combustible Gas Concentrations in Containment Following a Loss of Coolant Accident."

Table 6.2.1-1 Structural Heat Sinks
(Page 1 of 2)

		Area (ft^2)	Thickness (ft)	
A.	**Upper Compartment**			
	1.Operating Deck			
	Slab 1	4880	1.1	Concrete
	Slab 2	18280	.0005 1.4	Paint Concrete
	Slab 3	760	.00125 1.5	Paint Concrete
	Slab 4	3840	.0208 1.5	Stainless Steel Concrete
	2.Shell and Misc			
	Slab 5	56331	.000625 .08	Paint Steel
B.	**Lower Compartment**			
	1.Operating Deck, Crane Wall, and Interior Concrete			
	Slab 6	31963	1.43	Concrete
	2.Operating Deck			
	Slab 7	2830	.00125 1.0	Paint Concrete
	Slab 8	760	.0005 1.75	Paint Concrete
	3.Interior Concrete and Stainless Stell			
	Slab 9	2770	.021 2.0	Stainless Steel Concrete
A.	**Lower Compartment**			
	4.Floor*			
	Slab 10	15921	.0005	Paint Concrete
	5.Misc Steel			
	Slab 11	28500	.000625	Paint Steel
C.	**Ice Condenser**			
	1.Ice Baskets			
	Slab 12	180,628	0.00663	Steel

Table 6.2.1-1 Structural Heat Sinks (Continued)
(Page 2 of 2)

2.Lattice Frames			
Slab 13	76,650	0.0217	Steel
3.Lower Support Structure			
Slab 14	28,670	0.0267	Steel
4.Ice Condenser Floor			
Slab 15	3,336	0.000833 0.333	Paint Concrete
5.Containment Wall Panels & Containment Shell			
Slab 16	19,100	1.0 0.0625	Steel & Insulation Steel Shell
6.Crane Wall Panels and Crane Wall			
Slab 17	13,0055	1.0 1.0	Steel & Insulation Concrete

Table 6.2.1-2 Pump Flow Rates Vs. Time

Time after Safeguards Initiation (sec)	SIS Flow to Core (gpm)	Spray Flow (gpm)	RHR Spray Flow (gpm)
0	0	0	0
15	460	0	0
20	1065	0	0
25	4853	0	0
135	4853	4000	0
1768	4853	4000	0
1788	4853*	4000	0
1938	3788**	4000	0
2754	3788	4000	0
2774	3788	0	0
2894	3788	4000**	0
3600	1078	4000	2000
End of transient	1078	4000	2000

* 3788 gpm from sump

** All flow from sump from this point until end of transient

Table 6.2.1-3 Energy Balances

Sink	Approx. End of Blowdown (Btu)	Approx. End of Reflood (Btu) (t=216 sec)
*Ice Heat Removal	186 (10^6)	298 (10^6)
*Structural Heat Sinks	20 (10^6)	58 (10^6)
*RHR Heat Exchanger Heat Removal	0	0
*Spray Heat Exchanger Heat Removal	0	0
Energy Content of Sump	170 (10^6)	246 (10^6)
Ice Melted	0.6 (10^6)	1.05 (10^6)

*Integrated energies, Btu

Table 6.2.1-4 Energy Balances

Sink	Approx. Time of Ice Bed Melt Out (Btu) (t=2990)	Approx. Time of Peak Pressure (Btu) (t=3600.9)
*Ice Heat Removal	557 (10^6)	567 (10^6)
*Structural Heat Sinks	71.4 (10^6)	88.9 (10^6)
*RHR Heat Exchanger Heat Removal	34.7 (10^6)	48.5 (10^6)
*Spray Heat Exchanger Heat Removal	20.9 (10^6)	50.3 (10^6)
Energy Content of Sump	644 (10^6)	611 (10^6)
Ice Melted	2.125 (10^6)	2.125 (10^6)

*Integrated energies, Btu

Table 6.2.1-5 Material Property Data

Material	Thermal Conductivity Btu/hr-ft-°F	VolumetricHeat Capacity B/tu/ft^3-°F
Paint on Steel	0.21	14.0
Paint on Concrete	0.083	28.4
Concrete	.8	28.8
Stainless Steel	9.4	56.4
Carbon Steel	26.0	56.4

Table 6.2.1-6 TMD Input for Watts Barr
(Page 1 of 2)

Element	Volume (ft^3)	PSteam (psia)	PAir (psia)	Initial Temperature (°F)
1	28700.	0.3	14.7	120.
2	36800.	|	|	|
3	70200.	|	|	|
4	38800.	|	|	|
5	36800.	|	|	|
6	25114.	|	|	|
		|	|	|
		|	|	|
		|	|	|
		|	|	|
		|	|	|
		|	|	|
		9	9	9
25	651000.	0.3	14.7	120
26	11700.	|	|	|
27	17900.	|	|	|
28	11200.	|	|	|
29	18700.	|	|	|
30	11200.	|	|	|
		|	|	|
		|	|	|
		|	|	|
		|	|	|
		|	|	|
		9	9	9

Table 6.2.1-6 TMD Input for Watts Barr
(Page 2 of 2)

Element	Volume (ft^3)	PSteam (psia)	PAir (psia)	Initial Temperature (°F)
31	18000.	0.3	14.7	120.
32	10100.	|	|	|
33	15300.	|	|	|
34	13000.	|	|	|
35	4400.	|	|	|
36	4400.	|	|	|
37	9300.	|	|	|
50	1400.	|	|	|
		|	|	|
		|	|	|
		|	|	|
		|	|	|
		|	|	|
		|	|	|
		|	|	|
		|	|	|
		9	9	9
		0.3	14.7	120.

Table 6.2.1-7 TMD Flow Input Data For Watts Bar
(Page 1 of 2)

Flow PathElement to Element	Flow Path Length (ft)	Flow Area (ft^2)	LossCoefficient K	AreaRatio a/A
1 to 33	6.5	22.	1.5	0.048
2 to 27	3.5	48.	4.2	0.027
3 to 33	10.2	64.	1.5	0.048
4 to 33	7.9	44.	1.5	0.048
5 to 31	3.5	42.	4.2	0.027
6 to 33	5.7	16.	1.5	0.048
26 to 27	9.0	23.	2.7	0.067
27 to 3	9.3	46.	4.2	0.027
28 to 27	9.0	23.	2.7	0.067
29 to 36	3.7	15.	3.0	0.044
30 to 31	9.0	23.	2.7	0.067
31 to 6	11.0	58.	4.2	0.027
32 to 31	9.0	23.	2.7	0.067
33 to 5	7.8	36.	1.5	0.048
34 to 26	6.6	59.	1.5	0.171
35 to 28	2.8	17.	1.5	0.049
36 to 30	2.8	17.	1.5	0.049
37 to 32	3.2	23.	1.5	0.067
50 to 4	3.6	1.6	1.5	0.002
50 to 4	3.9	2.5	1.5	0.002
50 to 30	3.8	6.8	1.5	0.067
1 to 2	17.3	550.	0.33	0.43
2 to 3	24.2	550.	0.33	0.43
3 to 4	22.3	600.	0.30	0.47
4 to 5	19.7	550.	0.33	0.43
5 to 6	17.2	550.	0.33	0.43
6 to 1	29.4	140.	1.35	0.09
26 to 32	1.0	126.	1.6	0.843
27 to 1	6.9	60.	4.2	0.027
28 to 26	80.0	146.	0.5	0.977
29 to 35	3.8	15.	3.0	0.044
30 to 28	51.0	81.	1.6	0.542
31 to 4	9.3	44.	4.2	0.027
32 to 30	80.0	146.	0.5	0.977
33 to 2	8.1	38.	1.5	0.048
34 to 27	4.5	17.	3.0	0.049
35 to 27	3.7	15.	3.0	0.044
36 to 31	3.1	10.	3.0	0.029
37 to 31	3.4	10.	3.0	0.029

Table 6.2.1-7 TMD Flow Input Data For Watts Bar (Page 2 of 2)

Flow PathElement to Element	Flow Path Length (ft)	Flow Area (ft^2)	LossCoefficient K	AreaRatio a/A
40 to 1	10.36	121.9		
41 to 2	10.36	144.0		
42 to 3	10.36	288.0		
43 to 4	10.36	199.4		
44 to 5	10.36	155.1		
45 to 6	10.36	155.1		

Table 6.2.1-8 Calculated Maximum Peak Pressures In Lower Compartment Elements Assuming Unaugmented Flow

Element	1	2	3	4	5	6	
Peak Pressure (psig)	18.5	14.0	12.8	12.9	13.9	17.9	DECL - 100% Ent.
Peak Pressure (psig)	16.0	12.0	10.5	10.6	12.1	15.8	DEHL - Ent.

Table 6.2.1-9 Calculated Maximum Peak Pressures In The Ice Condenser Compartment Assuming Unaugmented Flow

Element	40	41	42	43	44	45	
Peak Pressure (psig)	13.9	10.3	9.4	9.4	10.2	13.6	DECL - 100% Ent.
Peak Pressure (psig)	11.5	8.5	7.8	7.8	8.7	11.4	DEHL - Ent.

Table 6.2.1-10 Calculated Maximum Differential Pressures Across The Operating Deck Or Lower Crane Wall Assuming Unaugmented Flow

Element	1	2	3	4	5	6	
Peak ΔP (psi)	16.6	11.2	9.0	9.2	11.0	16.2	DECL - 100% Ent.
Peak ΔP (psi)	15.7	11.7	8.8	8.9	11.8	15.5	DEHL - 100% Ent.

Table 6.2.1-11 Calculated Maximum Differential Pressures Across The Upper Crane Wall Assuming Unaugmented Flow

Element	7-8-9	10-11-12	13-14-15	16-17-18	19-20-21	22-23-24	
Peak ΔP (psi)	7.2	5.9	5.6	5.7	6.0	7.2	DECL - 100% Ent.
Peak ΔP (psi)	8.4	7.1	6.4	6.3	7.01	8.4	DEHL - 100% Ent.

Table 6.2.1-12 Sensitivity Studies For D. C. Cook Plant (Page 1 of 2)

PARAMETER	CHANGE MADE FROM BASE VALUE(1)	CHANGE IN OPERATING DECK ΔP(1)	CHANGE IN PEAK PRESSURE AGAINST THE SHELL(1)
Blowdown	+ 10%	+ 11%	+ 12%
Blowdown	- 10%	- 10%	- 12%
Blowdown	- 20%	- 20%	- 23%
Blowdown	- 50%	- 50%	- 53%
Break Compartment Inertial Length	+ 10%	+ 4%	+ 1%
Break Compartment Inertial Length	- 10%	- 4%	- 1%
Break Compartment Volume	+ 10%	- 2%	- 1%
Break Compartment Volume	- 10%	+ 2%	+ 1%
Break Compartment Vent Areas	+ 10%	- 6%	- 5%
Break Compartment Vent Areas	- 10%	+ 8%	+ 5%
Door Port Failure in Break Compartment	one door port fails to open	+ 1	- 1%
Ice Mass	+ 10%	0	0
Ice Mass	- 10%	0	0
Door Inertia	+ 10%	+ 1%	0
Door Inertia	- 10%	- 1%	0
All Inertial Lengths	+ 10%	+ 5%	+ 4%
All Inertial Lengths	- 10%	- 5%	- 3%
Ice Bed Loss Coefficients	+ 10%	0	0
Ice Bed Loss Coefficients	- 10%	0	0
Entrainment Level	0% Ent	- 27%	- 11%
Entrainment Level	30% Ent	- 19%	- 15%
Entrainmnet Level	50% Ent	- 13%	- 12%
Entrainment Level	75% Ent	- 6%	- 6%
Lower Compartment Loss Coefficients	+ 10%	0	0
Lower Compartment Loss Coefficients	- 10%	0	0
Cross Flow in Lower Plenum	low estimate of resistance	0	- 7%
Cross Flow in Lower Plenum	high estimate of resistance	0	- 3%
Ice Condenser Flow Area	+ 10%	0	- 3%

Table 6.2.1-12 Sensitivity Studies For D. C. Cook Plant (Page 2 of 2)

PARAMETER	CHANGE MADE FROM BASE VALUE[1]	CHANGE IN OPERATING DECK ΔP[1]	CHANGE IN PEAK PRESSURE AGAINST THE SHELL[1]
Ice Condenser Flow Area	- 10%	0	+ 4%
Ice Condenser Flow Area	+ 20%	0	- 6%
Ice Condenser Flow Area	- 20%	0	+ 8%
Initial Pressure in Containment	+ 0.3 psi	+ 2%	+ 2%
Initial Pressure in Containment	- 0.3 psi	- 2%	- 2%
Initial Ice Bed Temperature	+ 15°F	0	0
Initial Ice Bed Temperature	- 15°F	0	+ 1%

[1] All values shown are to the nearest percent.

Table 6.2.1-13 Watts Bar Ice Condenser Design Parameters

Reactor Containment Volume (net free volume, ft^3)		
	Upper Compartment	651,000
	Ice Compartment	110,520
	Lower Compartment	253,114
	Lower Compartment (dead-ended)	129,900
	Total Containment Volume	1,144,534
NSSS	Fraction of Nominal (FON) based on Reactor Power of, MWt	3,425*
	Analysis weight of ice in condenser, lbs (100% & 0% power DER cases)	2.125×10^6
	Analysis weight of ice in condenser, lbs (30% power, small split cases)	2.025×10^6
	Core Nuclear Power - % FON	
	100% power cases	1.02
	30% power cases	0.30
	0% power cases	Critical at 0.0

* Includes RCP power (14 MWt)

Table 6.2.1-14 Allowable Leakage Area For Various Reactor Coolant System Break Sizes

Break Size	5 ft^2 Deck Leak Air Compression Peak (psig)	Deck Leakage Area (ft^2)	Resultant Peak Containment Pressure (psig)
Double-ended	7.8	54	12.0
0.6 Double-ended	6.6	40	12.0
3 ft^2	6.25	46	12.0
10 inch diameter	5.75	38	12.0
10 inch diameter*	5.75	50	10.7*
6 inch diameter	5.5	41	12.0
6 inch diameter*	5.5	50	10.0*
2 inch diameter	5.0	50	5.0
2 inch diameter*	4.0	50	4.2*
1/2 inch diameter	3.0	>50	3.0

*This case assumes an upper compartment structural heat sink steam condensation of 6 lb/sec and 30% of deck leakage is air.

Note:One spray at 4750 gpm at 100°F was assumed for all breaks smaller than the 3 ft^2 break.

Table 6.2.1-15 Blowdown Data Summary

Breaks	
Double Ended Pump Suction	6.2.1-16a
.6 Double Ended Pump Suction	6.2.1-16b
3 ft^2 Pump Suction Split	6.2.1-16c
Double Ended Hot Leg	6.2.1-16d
Double Ended Cold Leg	6.2.1-16e

Table 6.2.1-16a Blowdown Double-Ended Pump Suction Break

Time (sec)	Mass Rate (lbs/sec)	Energy Rate (Btu/sec)
1.00000E-08	7.01135E+04	3.92484E+07
2.50331E-02	7.01135E+04	3.92484E+07
1.25218E-01	7.74512E+04	4.34598E+07
2.50276E-01	8.27959E+04	4.67551E+07
3.50283E-01	7.96880E+04	4.53219E+07
4.50334E-01	7.33320E+04	4.21250E+07
5.75504E-01	7.02176E+04	4.07680E+07
7.25475E-01	6.71328E+04	3.94242E+07
8.75455E-01	6.41607E+04	3.80113E+07
1.07552E+00	6.05893E+04	3.61407E+07
1.35026E+00	5.66415E+04	3.40634E+07
1.65024E+00	5.19535E+04	3.16012E+07
1.90023E+00	4.75583E+04	2.92134E+07
2.75014E+00	3.86340E+04	2.43129E+07
4.25035E+00	3.15758E+04	2.32677E+07
5.75034E+00	2.88951E+04	1.86041E+07
7.25076E+00	2.60857E+04	1.69035E+07
8.75090E+00	2.30263E+04	1.55946E+07
1.02500E+01	2.05454E+04	1.41215E+07
1.20020E+01	1.76466E+04	1.23493E+07
1.37519E+01	1.46272E+04	1.04894E+07
1.52508E+01	1.24415E+04	8.99497E+06
1.67506E+01	1.01873E+04	7.17505E+06
1.82507E+01	7.28281E+03	4.82533E+06
1.97504E+01	4.15947E+03	2.87425E+06
2.15006E+01	2.26931E+03	1.32581E+06
2.32505E+01	6.49016E+02	3.73793E+05
2.40056E+01	9.37511E+01	2.71096E+04
2.40112E+01	0.	0.

Table 6.2.1-16b 0.6 Double-Ended Pump Suction Guillotine

Time (sec)	Mass Rate (lbs/sec)	Energy Rate (Btu/sec)
1.00000E-08	4.79640E+04	2.68810E+07
2.50299E-02	4.79640E+04	2.68810E+07
1.25329E-01	6.31848E+04	3.54951E+07
2.75628E-01	6.36324E+04	3.59799E+07
4.00528E-01	6.17803E+04	3.51421E+07
5.25375E-01	5.93017E+04	3.40101E+07
6.75264E-01	5.66199E+04	3.27632E+07
8.25324E-01	5.30648E+04	3.09105E+07
1.00043E+00	4.99152E+04	2.92173E+07
1.25040E+00	4.88309E+04	2.87375E+07
1.55034E+00	4.80839E+04	2.84306E+07
1.85026E+00	4.30301E+04	2.79501E+07
2.75030E+00	3.96863E+04	2.41877E+07
4.50032E+00	2.95092E+04	1.86615E+07
6.25035E+00	2.64339E+04	1.68526E+07
7.75033E+00	2.42472E+04	1.55843E+07
9.25022E+00	2.09389E+04	1.41847E+07
1.10014E+01	1.80135E+04	1.25018E+07
1.30015E+01	1.58736E+04	1.11191E+07
1.47511E+01	1.37137E+04	9.77383E+06
1.65009E+01	1.18047E+04	8.41174E+06
1.82505E+01	9.64089E+03	7.02915E+06
2.00008E+01	7.78744E+03	5.24305E+06
2.20006E+01	4.46210E+03	3.08245E+06
2.37505E+01	2.87242E+03	1.79967E+06
2.55004E+01	1.85402E+03	1.01407E+06
2.75002E+01	6.52229E+02	3.30052E+05
2.85410E+01	9.00244E+01	2.51400E+04
2.85821E+01	0.	0.

Table 6.2.1-16d Double-Ended Hot Leg Guillotine Break

Time (sec)	Mass Rate (lbs/sec)	Energy Rate (Btu/sec)
1.00000E-08	6.96547E+04	4.58031E+07
2.51261E-02	6.96547E+04	4.58031E+07
1.00235E-01	8.15972E+04	5.37630E+07
2.00266E-01	7.34083E+04	4.81065E+07
3.00398E-01	6.98929E+04	4.54532E+07
4.25354E-01	6.68622E+04	4.31261E+07
5.50405E-01	6.46194E+04	4.14575E+07
6.50302E-01	6.31444E+04	4.04248E+07
7.75231E-01	6.16152E+04	3.94045E+07
9.00263E-01	6.01975E+04	3.84834E+07
1.07512E+00	5.87096E+04	3.75333E+07
1.30026E+00	5.71064E+04	3.65080E+07
1.55026E+00	5.50804E+04	3.52799E+07
1.85030E+00	5.18404E+04	3.33336E+07
2.50026E+00	4.53849E+04	2.94695E+07
3.50033E+00	3.89711E+04	2.54537E+07
4.75050E+00	3.55118E+04	2.31258E+07
6.00122E+00	3.37713E+04	2.18334E+07
7.25178E+00	2.94095E+04	1.96306E+07
8.75165E+00	2.47901E+04	1.70620E+07
1.05023E+01	2.07998E+04	1.45049E+07
1.22515E+01	1.66694E+04	1.19824E+07
1.37503E+01	1.28715E+04	9.54153E+06
1.50005E+01	9.30597E+03	6.76967E+06
1.62505E+01	5.50193E+03	4.22690E+06
1.77502E+01	2.38147E+03	2.11086E+06
1.90003E+01	6.88399E+02	5.41005E+05
1.96416E+01	2.41188E+02	2.02620E+05
1.97828E+01	0.	0.

Table 6.2.1-16e Double-Ended Cold Leg Guillotine Break

Time (sec)	Mass Rate (lbs/sec)	Energy Rate (Btu/sec)
1.00000E-08	5.74645E+04	3.28466E+07
2.50459E-02	5.74645E+04	3.28466E+07
1.00114E-01	9.03492E+04	5.18057E+07
2.00119E-01	9.18449E+04	5.26979E+07
3.25172E-01	9.06893E+04	5.20413E+07
4.50202E-01	8.90442E+04	5.11007E+07
5.50125E-01	8.80348E+04	5.05383E+07
6.75058E-01	8.65350E+04	4.97178E+07
8.00023E-01	8.48007E+04	4.87821E+07
9.00050E-01	8.32524E+04	4.79554E+07
1.02506E+00	8.23989E+04	4.75621E+07
1.25015E+00	7.96964E+04	4.61989E+07
1.50024E+00	7.55285E+04	4.40130E+07
1.70015E+00	7.26571E+04	4.25099E+07
2.15012E+00	6.40333E+04	3.76596E+07
3.00013E+00	5.19763E+04	3.10462E+07
4.25057E+00	4.26906E+04	2.65828E+07
5.50071E+00	3.70909E+04	2.37146E+07
6.75047E+00	3.23565E+04	2.07472E+07
8.00094E+00	2.70288E+04	1.74891E+07
9.25178E+00	2.09152E+04	1.41635E+07
1.07513E+01	1.51420E+04	1.10073E+07
1.20002E+01	9.28263E+03	7.77219E+06
1.32504E+01	6.13172E+03	5.28681E+06
1.45009E+01	3.85781E+03	3.30780E+06
1.57503E+01	2.39742E+03	2.03887E+06
1.72504E+01	7.18563E+02	8.07354E+05
1.82102E+01	1.57874E+02	2.01111E+05
1.84200E+01	0.	0.

Table 6.2.1-17 19 Element W Reflood Model

	Element	Broken Loop Area (Ft^2)	Unbroken Loop Area (Ft^2)	Form Factor K	Equivalent Length (Ft)	Hydraulic Diameter (Ft)
1.	Hot Leg Nozzle	4.59	13.77	.181	0.0	2.42
2.	Hot Leg Piping	4.59	13.77	.447	0.0	2.42
3.	Steam Generator Inlet Plenum	4.59	13.77	.442	0.0	2.42
4.	Steam Generator Tubes	11.24	33.72	3.01	55.9	.055
5.	Steam Generator Outlet Plenum	5.24	15.72	.317	0.0	2.58
6.	Crossover Leg Piping	5.24	15.72	.691	0.0	2.58
7.	Pump (forward)	4.50	13.50	(1)	0.0	2.4
8.	Cold Leg Piping	4.12	12.36	.310	0.0	2.29
9.	Cold Leg Inlet Nozzle		12.36	.373	0.0	2.29
10.	Around Downcomer (est.)(2)		20.0	0.01	8.0	4.0
11.	Cold Leg Inlet Nozzle		4.12	.373	0.0	2.29
12.	Cold Leg Piping		4.12	.310	0.0	2.29
13.	Pump (reverse)		4.50	(1)	0.0	2.4
14.	Crossover Leg Piping		5.24	.691	0.0	2.58
15.	Steam Generator Outlet Plenum		5.24	.317	0.0	2.58
16.	Steam Generator Tubes		11.24	3.01	55.9	0.055
17.	Steam Generator Inlet Plenum		4.59	.442	0.0	2.42
18.	Hot leg Piping		4.59	.447	0.0	2.42

(1)The analysis accounts for transient pump resistances due to pump coastdown.

(2)The path around the downcomer is specified only to provide a loop reference point for pressure at top of downcomer. The frictional pressure drop data are estimated and provide negligible pressure drop.

Table 6.2.1-18 Reflood Data Summary

Breaks	Tables
Double-Ended Pump Suction Minimum SI	6.2.1-19a
Double-Ended Pump Suction Maximum SI	6.2.1-19b
0.6 Double-Ended Pump Suction Maximum SI	6.2.1-19c
3 ft^2 Pump Suction Split Maximum SI	6.2.1-19d
Double-Ended Hot Leg Maximum SI	6.2.1-19e
Double-Ended Cold Leg Maximum SI	6.2.1-19f

Table 6.2.1-19a Mass And Energy Releases Post-Blowdown Deps Guillotine Minimum Safeguards

Time (sec x 10^2)	Mass Rate (lbm/sec x 10^2)	Energy Rate (Btu/sec x 10^5)
2.4000000E+01	0.	0.
2.5080000E+01	4.4535613E+02	5.7759761E+05
2.5210000E+01	2.3648755E+02	3.0670323E+05
2.6010000E+01	3.6059006E+02	4.6764922E+05
3.1010000E+01	9.7221735E+02	1.2588249E+06
3.2010000E+01	1.0546636E+03	1.3644830E+06
3.2010000E+01	1.0579200E+03	1.3685351E+06
3.6010000E+01	1.0194988E+03	1.3153768E+06
4.7010000E+01	9.2782863E+02	1.1882574E+06
5.0000000E+01	9.0445180E+02	1.1559287E+06
5.4010000E+01	8.7837558E+02	1.1200505E+06
6.4010000E+01	7.2257377E+02	9.1625920E+05
6.4010000E+01	7.2186668E+02	9.1534335E+05
7.4010000E+01	6.1354674E+02	7.7492356E+05
8.4010000E+01	5.4344647E+02	6.8418096E+05
1.0000000E+02	5.0943384E+02	6.3848652E+05
1.4401000E+02	4.2507584E+02	5.2736718E+05
1.9499900E+02(1)	4.0363473E+02	4.9586537E+05
1.9500100E+02	1.5140372E+02	1.8596837E+05
2.0000000E+02	1.5046056E+02	1.8480579E+05
5.0000000E+02	1.0753474E+02	1.3189885E+05
1.0000000E+03	8.3065608E+01	1.0172258E+05
1.4999990E+03	7.3412585E+01	8.9786862E+04
1.5000010E+03	8.2843218E+01	1.0131827E+05
2.0000000E+03	7.6853863E+01	9.3879329E+04
5.0000000E+03	5.8619500E+01	7.1208424E+04
1.0000000E+04	4.8076742E+01	5.8075932E+04
2.0000000E+04	3.9523537E+01	4.7433722E+04
1.0000000E+06	1.1999430E+01	1.3945929E+04

Notes:

(1) Entrainment ends at 195.00 seconds

Table 6.2.1-19b Mass And Energy Releases Post-Blowdown Double-Ended Pump Suction Guillotine Maximum Safeguards

Time (sec x 10^2)	Mass Rate (lbm/sec x 10^2)	Energy Rate (Btu/sec x 10^5)
2.4000000E+01	0.	0.
2.5010000E+01	3.2911002E+02	4.2682516E+05
2.6010000E+01	3.5178251E+02	4.5623152E+05
2.7010000E+01	5.0915921E+02	6.6025506E+05
3.1010000E+01	1.0174371E+03	1.3171506E+06
3.2010000E+01	1.0403702E+03	1.3534354E+06
3.2010000E+01	1.0456572E+03	1.3524546E+06
3.4010000E+01	1.0250232E+03	1.3239151E+06
3.7010000E+01	9.9838583E+02	1.2869778E+06
4.5010000E+01	9.3259202E+02	1.1959739E+06
5.0000000E+01	8.9624439E+02	1.1458270E+06
5.4010000E+01	8.6810003E+02	1.1073057E+06
7.0010000E+01	7.6576687E+02	9.6822679E+05
8.4010000E+01	6.9297570E+02	8.7060582E+05
1.0000000E+02	6.3350166E+02	7.9081213E+05
1.4401000E+02	4.6917311E+02	5.7788924E+05
1.6699900E+02(1)	4.0929915E+02	5.0188401E+05
1.6700100E+02	1.5871940E+02	1.9457442E+05
2.0000000E+02	1.5026145E+02	1.8417356E+05
5.0000000E+02	1.0753474E+02	1.3163706E+05
1.0000000E+03	8.3065608E+01	1.0153356E+05
1.4999990E+03	7.3412585E+01	8.9629853E+04
1.5000010E+03	8.2843218E+01	1.0114041E+05
2.0000000E+03	7.6853863E+01	9.3721244E+04
5.0000000E+03	5.8619500E+01	7.1117839E+04
1.0000000E+04	4.80767425+01	5.8025135E+04
2.0000000E+04	3.9523537E+01	4.7410502E+04
5.0000000E+04	3.0543703E+01	3.6316472E+04
1.0000000E+06	1.1999430E+01	1.3945907E+04

Notes:

(1) Entrainment ends at 167.00 seconds

Table 6.2.1-19d Mass And Energy Releases 3 Ft^2 Pump Suction Split

Time (sec x 10^2)	Mass Rate (lbm/sec x 10^2)	Energy Rate (Btu/sec x 10^5)
4.1500000E+01	0.	0.
4.2680000E+01	6.7191477E+02	8.7107099E+05
4.3510000E+01	2.8142791E+02	3.6477252E+05
4.9510000E+01	9.1074969E+02	1.1783529E+06
5.0000000E+01	9.7405084E+02	1.2598686E+06
5.6510000E+01	9.1843783E+02	1.1825077E+06
6.1510000E+01	8.8458777E+02	1.1354443E+06
6.6510000E+01	8.5389483E+02	1.0928981E+06
7.1510000E+01	8.2181484E+02	1.0485744E+06
8.1510000E+01	7.6530291E+02	9.7113123E+05
9.1510000E+01	7.1653478E+02	9.0491471E+05
1.0000000E+02	6.8022180E+02	8.5581957E+05
1.1374000E+02	6.2007089E+02	7.7568913E+05
1.4151000E+02	5.1920500E+02	6.4333099E+05
1.6151000E+02	4.5633792E+02	5.6224391E+05
1.8250900E+02(1)	4.0140774E+02	4.9234933E+05
1.8251100E+02	2.4851142E+02	3.0475763E+05
1.8289900E+02	2.4851115E+02	3.0475730E+05
1.8290100E+02	1.5640830E+02	1.9180789E+05
2.0000000E+02	1.5254775E+02	1.8705735E+05
5.0000000E+02	1.0824998E+02	1.3255538E+05
1.0000000E+03	8.3211201E+01	1.0173360E+05
1.4999990E+03	7.3440869E+01	8.9676032E+04
1.5000010E+03	8.2874008E+01	1.0119188E+05
2.0000000E+03	7.6858829E+01	9.3735455E+04
5.0000000E+03	5.8617894E+01	7.1100225E+04
1.0000000E+04	4.8075425E+01	5.7995931E+04
2.0000000E+04	3.9522455E+01	4.7377723E+04
1.0000000E+06	1.1999101E+01	1.3945329E+04

Notes:

(1) Entrainment ends at 182.51 seconds

Table 6.2.1-19e Mass And Energy Releases
Double-Ended Hot Leg Guillotine

Time (sec x 10^2)	Mass Rate (lbm/sec x 10^2)	Energy Rate (Btu/sec x 10^5)
1.9800000E+01	0.	0.
2.0000000E+01	1.2255363E+03	3.1953427E+05
2.0410000E+01	1.1062387E+03	4.5042751E+05
2.0510000E+01	1.0687712E+03	4.5157073E+05
2.0710000E+01	4.4278860E+02	4.1377824E+05
2.1610000E+01	6.8216035E+02	4.8675568E+05
2.6810000E+01	1.9629021E+03	8.1212676E+05
2.9810000E+01	1.9949716E+03	8.2479356E+05
3.7810000E+01	1.8417703E+03	7.8488364E+05
5.0000000E+01	1.5319554E+03	7.0257474E+05
5.5810000E+01	1.3848108E+03	6.6410252E+05
6.3810000E+01	1.1690957E+03	6.0798705E+05
6.9810000E+01	1.0667600E+03	5.8010146E+05
7.9810000E+01	9.8498857E+02	5.5580778E+05
9.9810000E+01	9.2584339E+02	5.3341112E+05
1.0000000E+02	9.2449665E+02	5.3291239E+05
1.2929900E+02(1)	7.7958780E+02	4.8695008E+05
1.2930100E+02	1.7010402E+02	2.0092702E+05
2.0000000E+02	1.5016167E+02	1.7736875E+05
5.0000000E+03	1.0736836E+02	1.2681619E+05
1.0000000E+03	8.3031351E+01	9.8065589E+04
1.4999990E+03	7.3405566E+01	8.6692914E+04
1.5000010E+03	8.2835559E+01	9.7829762E+04
2.0000000E+03	7.6852224E+01	9.0759231E+04
5.0000000E+03	5.8619500E+01	6.9210825E+04
1.0000000E+04	4.8076742E+01	5.6745978E+04
2.0000000E+04	3.9523537E+01	4.6627441E+04
5.0000000E+04	3.0543703E+01	3.5992603E+04
1.0000000E+06	1.1999430E+01	1.3996067E+04

Notes:

(1) Entrainment ends at 129.30 seconds

Table 6.2.1-19f Mass And Energy Releases
Double-Ended Cold Leg Guillotine

Time (sec x 10^2)	Mass Rate (lbm/sec x 10^2)	Energy Rate (Btu/sec x 10^5
1.8400000E+01	4.0206092E+01	5.2178964E+04
2.0000000E+01	3.6096903E+02	4.7095009E+05
2.0640000E+01	1.6422536E+02	2.1425283E+05
2.2410000E+01	1.9902935E+02	2.5965535E+05
2.5410000E+01	2.6405340E+02	3.4446796E+05
2.8410000E+01	2.7290008E+02	3.5598031E+05
3.8410000E+01	2.6793330E+02	3.4941184E+05
5.0000000E+01	2.6735934E+02	3.4856086E+05
5.8410000E+01	2.6665917E+02	3.4757169E+05
7.8410000E+01	2.5637723E+02	3.3399541E+05
9.8410000E+01	2.4678501E+02	3.2133790E+05
1.0000000E+02	2.4609000E+02	3.2041854E+05
1.1841000E+02	2.4070208E+02	3.1326385E+05
2.0000000E+02	2.1941085E+02	2.8498083E+05
2.1841000E+02	2.1466465E+02	2.7869617E+05
3.1841000E+02	1.9143203E+02	2.4797559E+05
4.1841000E+02	1.6864794E+02	2.1802051E+05
4.9699900E+02(1)	1.4895299E+02	1.9230197E+05
4.9700100E+02	1.0753159E+02	1.4090801E+05
5.0000000E+02	1.0753150E+02	1.4090790E+05
1.0000000E+03	8.3020034E+01	1.0820367E+05
1.4999990E+03	7.3403247E+01	9.5261958E+04
1.5000010E+03	8.2833029E+01	1.0749028E+05
2.0000000E+03	7.6851683E+01	9.9318426E+04
5.0000000E+03	5.8619500E+01	7.4302652E+04
1.0000000E+04	4.8076742E+01	5.9723887E+04
2.0000000E+04	3.9523537E+01	4.8014843E+04
5.0000000E+04	3.0543703E+01	3.6285953E+04
1.0000000E+06	1.1999430E+01	1.3945396E+04

Notes:

(1) Entrainment ends at 497.00 seconds

Table 6.2.1-20 Watts Bar Maximum SI Post-Reflood Mass And Energy Release Information

TIME SECONDS	STEAM FLOW MASS LB_m/SEC	STEAM FLOW ENERGY 10^3 BTU/SEC	WATER FLOW MASS LB_m/SEC	WATER FLOW ENERGY 10^3 BTU/SEC
167	131.	156.	1250.	199.
202	128.	152.	1260.	199.
302	126.	150.	1260.	188.
402	126.	149.	1260.	186.
502	126.	148.	1260.	190.
602	126.	148.	1260.	186.
702	127.	148.	1260.	183.
727	127.	148.	1260.	182.
732	92.3	106.	1290.	189.
802	90.3	104.	1290.	187.
902	87.7	101.	1290.	190.
1002	85.5	98.9	1300.	186.
1102	83.5	96.6	1300.	188.
1302	80.2	92.7	1300.	188.
1502	77.4	89.5	1310.	186.
1637	75.7	87.6	1310.	187.
INTEGRATED	$10^3 LB_m$	10^6 BTU	$10^3 LB_m$	10^6BTU
1637	146.	171.	1890.	277.

Table 6.2.1-21 Watts Bar Minimum SI Post-Reflood Mass And Energy Release Information

TIME SECONDS	STEAM FLOW MASS LB_m/SEC	STEAM FLOW ENERGY 10^3 BTU/SEC	WATER FLOW MASS LB_m/SEC	WATER FLOW ENERGY 10^3 BTU/SEC
195	297.	354.	370.	72.9
200	297.	353.	370.	72.9
300	297.	344.	371.	73.0
305	297.	344.	371.	73.0
310	149.	172.	519.	102.
400	140.	161.	528.	104.
500	131.	152.	536.	106.
600	131.	152.	536.	106.
700	124.	143.	543.	107.
800	118.	136.	549.	108.
900	118.	137.	549.	108.
1000	112.	129.	556.	109.
1200	105.	121.	563.	111.
1400	100.	116.	567.	112.
1600	96.6	112.	571.	112.
1765	97.1	112.	570.	112.
INTEGRATED	10^3 LB_m	10^6 BTU	10^3 LB_m	10^6 BTU
1765	200.	232.	848.	167.

Table 6.2.1-22 Available Energy Between 20.2 Psia And 14.7 Psia

Broken Loop Stem Generator	3.696×10^6 Btu
Unbroken Loop Steam Generator	10.934×10^6 Btu
Metal Energy (THIN + THICK)	4.816×10^6 Btu
Core Stored	$.604 \times 10^6$ Btu
TOTAL	20.05×10^6 Btu

Table 6.2.1-23 Break Mass And Energy Flow From A Double-Ended Cold Leg Guillotine (Page 1 of 10)

Time (sec)	Mass Flow (lbm/sec)	Energy Flow (Btu/sec)	Avg. Enthalpy (Btu/lbm)
0.00000	9.6110000E+03	5.3946543E+06	561.30
0.00101	4.3310502E+04	2.4100795E+07	556.47
0.00201	5.6464849E+04	3.1421870E+07	556.49
0.00301	6.1520189E+04	3.4231211E+07	556.42
0.00401	6.2907110E+04	3.4995181E+07	556.30
0.00501	6.2527557E+04	3.4773203E+07	556.13
0.00601	6.1359842E+04	3.4111223E+07	555.92
0.00701	5.9847065E+04	3.3257665E+07	555.71
0.00801	5.8188878E+04	3.2325854E+07	555.53
0.00900	5.6669717E+04	3.1475995E+07	555.43
0.01001	5.5334196E+04	3.0733067E+07	555.41
0.01101	5.4380116E+04	3.0206926E+07	555.48
0.01202	5.3848579E+04	2.9918413E+07	555.60
0.01301	5.3722982E+04	2.9856042E+07	555.74
0.01403	5.3913587E+04	2.9968612E+07	555.86
0.01503	5.4272426E+04	3.0172312E+07	555.94
0.01602	5.4632246E+04	3.0374580E+07	555.98
0.01700	5.4934445E+04	3.0543650E+07	556.00
0.01803	5.5232000E+04	3.0709908E+07	556.02
0.01903	5.5482063E+04	3.0849637E+07	556.03
0.02004	5.5707346E+04	3.0975819E+07	556.05
0.02101	5.5896536E+04	3.1082274E+07	556.07
0.02205	5.6078108E+04	3.1185010E+07	556.10
0.02300	5.6240106E+04	3.1277094E+07	556.14
0.02402	5.6414116E+04	3.1376145E+07	556.18
0.02504	5.6591029E+04	3.1476717E+07	556.21
0.02606	5.6764048E+04	3.1574969E+07	556.25
0.02702	5.6928226E+04	3.1668125E+07	556.28
0.02806	5.7102526E+04	3.1766906E+07	556.31
0.02902	5.7263203E+04	3.1857866E+07	556.34
0.03003	5.7428068E+04	3.1951113E+07	556.37
0.03101	5.7583531E+04	3.2038998E+07	556.39
0.03202	5.7746706E+04	3.2131054E+07	556.41
0.03304	5.7903222E+04	3.2219280E+07	556.43
0.03401	5.8052067E+04	3.2303155E+07	556.45
0.03501	5.8195321E+04	3.2383957E+07	556.47
0.03601	5.8331171E+04	3.2460804E+07	556.49
0.03703	5.8470775E+04	3.2540002E+07	556.52
0.03801	5.8606356E+04	3.2616877E+07	556.54

Table 6.2.1-23 Break Mass And Energy Flow From A Double-Ended Cold Leg Guillotine (Page 2 of 10)

.04012	5.8872406E+04	3.2768324E+07	556.60
.04101	5.9008660E+04	3.2846908E+07	556.65
.04201	5.9153822E+04	3.2932609E+07	556.73
.04300	5.9313778E+04	3.302664 E+07	556.81
.04401	5.9490981E+04	3.3130077E+07	556.89
.04501	5.9679056E+04	3.3239170E+07	556.97
.04600	5.9873576E+04	3.3351437E+07	557.03
.04700	6.0077022E+04	3.3468342E+07	557.09
.04800	6.0407806E+04	3.3677849E+07	557.51
.04900	6.0986562E+04	3.4009096E+07	557.65
.05000	6.1649802E+04	3.4384106E+07	557.73
.05100	6.2310578E+04	3.4754624E+07	557.76
.05200	6.2917709E+04	3.5094556E+07	557.79
.05302	6.3477117E+04	3.5407841E+07	557.80
.05401	8.3423661E+04	4.6840941E+07	561.48
.05501	7.3060968E+04	4.3557140E+07	557.99
.05601	8.0518030E+04	4.5030731E+07	559.26
.05700	8.2563578E+04	4.6098557E+07	558.34
.05800	8.3815137E+04	4.6812762E+07	558.52
.05902	8.3449231E+04	4.6592537E+07	558.33
.06000	8.4269954E+04	4.7056412E+07	558.40
.06101	8.4735994E+04	4.7306624E+07	558.28
.06202	8.3970123E+04	4.6856778E+07	558.02
.06300	8.4285244E+04	4.6484834E+07	558.14
.06403	8.4394816E+04	4.7109317E+07	558.20
.06502	8.4573828E+04	4.7202661E+07	558.12
.06611	8.4787755E+04	4.7325979E+07	558.17
.06703	8.5532633E+04	4.7747200E+07	558.23
.06802	8.5992772E+04	4.8003061E+07	558.22
.06902	8.5421297E+04	4.8244326E+07	558.25
.07004	8.5727778E+04	4.8412801E+07	558.22
.07102	8.6796001E+04	4.8448914E+07	558.19
.07203	8.6870937E+04	4.8490730E+07	558.19
.07304	8.7054880E+04	4.8594295E+07	558.20
.07402	8.7178558E+04	4.8661343E+07	558.18
.07501	8.7144334E+04	4.8640448E+07	558.16
.07605	8.7239117E+04	4.8595232E+07	558.18
.07706	8.7495940E+04	4.8840764E+07	558.21
.07803	8.7779389E+04	4.9001329E+07	558.23
.07905	8.8111858E+04	4.9189719E+07	558.26
.08014	8.8437477E+04	4.9373735E+07	558.29

Table 6.2.1-23 Break Mass And Energy Flow From A Double-Ended Cold Leg Guillotine (Page 3 of 10)

.08101	8.8713080E+04	4.9529214E+07	558.31
.08237	8.8970751E+04	4.9673906E+07	558.32
.08339	9.9150300E+04	4.9774884E+07	558.32
.08404	9.9278550E+04	4.9845700E+07	558.32
.08701	8.9412638E+04	5.01462878+07	558.34
.08800	9.0027554E+04	5.0267688E+07	556.36
.08903	9.0281189E+04	5.0411020E+07	557.36
.09005	9.0539626E+04	5.0556703E+07	557.39
.09101	9.0743822E+04	5.0671166E+07	557.40
.09207	9.0000901E+04	5.0758235E+07	557.39
.09305	9.0086401E+04	5.0804912E+07	557.38
.09412	9.1143158E+04	5.8835575E+07	557.37
.09510	9.1106623E+04	5.0870216E+07	557.36
.09608	9.1186559E+04	5.0914656E+07	557.36
.09708	9.1302596E+04	5.0979666E+07	561.36
.09806	9.1443286E+04	5.1058782E+07	557.37
.09903	9.1592551E+04	5.1142472E+07	559.37
.19006	9.1728833E+04	5.1218292E+07	558.37
.19514	9.2351448E+04	5.1394011E+07	558.32
.11012	9.2387798E+04	5.1578304E+07	558.28
.11511	9.2236260E+04	5.1486172E+07	558.20
.12001	9.2917771E+04	5.1359571E+07	558.15
.12514	9.1727154E+04	5.1196412E+07	558.14
.13014	9.1623195E+04	5.1144798E+07	558.21
.13511	9.1748740E+04	5.1225781E+07	558.33
.14004	9.2120808E+04	5.1446366E+07	558.47
.14512	9.2579812E+04	5.1712621E+07	558.57
.15007	9.2941215E+04	5.1919892E+07	558.63
.15519	9.3225048E+04	5.2081879E+07	558.67
.16003	9.3491097E+04	5.2233133E+07	558.70
.16505	9.3818313E+04	5.24190993+07	558.73
.17002	9.4199119E+04	5.2634778E+07	558.76
.17500	9.4556660E+04	5.2836777E+07	558.78
.18010	9.4834408E+04	5.2992611E+07	558.79
.18509	9.4979093E+04	5.3072559E+07	558.78
.19007	9.4971100E+04	5.3065115E+07	558.75
.19508	9.4787975E+04	5.2958276E+07	558.70
.20001	9.4482682E+04	5.2783541E+07	558.66
.21003	9.3857870E+04	5.2426175E+07	558.57
.22004	9.3482892E+04	5.2212471E+07	558.52
.23008	9.3115899E+04	5.2007458E+07	558.52
.24014	9.2880327E+04	5.1879691E+07	558.56

Table 6.2.1-23 Break Mass And Energy Flow From A Double-Ended Cold Leg Guillotine (Page 4 of 10)

.25011	9.2987393E+04	5.1899210E+07	558.61
.26085	9.3088912E+04	5.2004007E+07	558.65
.27007	9.3293866E+04	5.2120524E+07	558.67
.28013	9.3546973E+04	5.2264903E+07	558.70
.29015	8.3725635E+04	5.2365366E+07	558.71
.30009	9.3670696E+04	5.2332535E+07	558.69
.31008	9.3507989E+04	5.2239258E+07	558.66
		5.2040402E+07	558.62
.34021	9.2638976E+04	5.1748157E+07	558.60
.35012	9.2708694E+04	5.1789509E+07	558.63
.36001	9.2722621E+04	5.1797589E+07	558.63
.37009	9.2570379E+04	5.1711187E+07	558.61
.38006	9.2414695E+04	5.1623414E+07	558.61
.39010	9.2271423E+04	5.1542499E+07	558.60
.40010	9.2084414E+04	5.1436520E+07	558.58
.41010	9.1843519E+04	5.1300115E+07	558.56
.42012	9.1577114E+04	5.1149514E+07	558.54
.43000	9.1310985E+04	5.0999398E+07	558.52
.44012	9.1118166E+04	5.0891429E+07	558.52
.45008	9.1177214E+04	5.0987004E+07	558.54
.46010	9.1130754E+04	5.0901754E+07	558.56
.47012	9.1171899E+04	5.0925777E+07	558.57
.48011	9.1141485E+04	5.0908756E+07	558.57
.49018	9.1030159E+04	5.0845649E+07	558.56
.50000	9.0877513E+04	5.0759274E+07	558.55
.51009	9.0716741E+04	5.0668508E+07	558.54
.52016	9.0525631E+04	5.0550518E+07	558.52
.53004	9.0280616E+04	5.0422042E+07	558.50
.54012	9.0027339E+04	5.0279431E+07	558.49
.55066	9.9853472E+04	5.0182236E+07	558.49
.56012	9.9756392E+04	5.0128690E+07	558.50
.57015	9.9702675E+04	5.0099544E+07	558.51
.58001	9.9656269E+04	5.0074286E+07	558.51
.59012	9.9574430E+04	5.0028693E+07	558.52
.60022	9.9437753E+04	4.9951947E+07	558.51
.61017	9.9276720E+04	4.9861529E+07	558.51
.62017	9.9112503E+04	4.9769422E+07	558.50
.63018	9.8927891E+04	4.9665729E+07	558.49
.64017	9.8714678E+04	4.9545884E+07	558.49
.65015	9.3497653E+04	4.9424142E+07	558.48
.66017	9.8310815E+04	4.9319743E+07	558.48
.67013	9.8164091E+04	4.9238154E+07	558.48
.68016	9.8043186E+04	4.9171145E+07	558.49

Table 6.2.1-23 Break Mass And Energy Flow From A Double-Ended Cold Leg Guillotine (Page 5 of 10)

.69053	8.7936650E+04	4.9112289E+07	558.50
.70013	8.7833343E+04	4.9055160E+07	558.50
.71015	8.7699937E+04	4.8980863E+07	558.51
.72002	8.7515577E+04	4.8877576E+07	558.50
.73008	8.7289861E+04	4.8751064E+07	558.50
.74014	8.7057520E+04	4.8620990E+07	558.49
.75005	8.6822139E+04	4.8489298E+07	558.49
.76008	8.6586328E+04	4.8357560E+07	558.49
.77012	8.6371277E+14	4.8237750E+07	558.49
.78012	8.6187553E+04	4.8135776E+07	558.50
.81011	8.5732780E+04	4.7883581E+07	558.52
.82014	8.5520138E+04	4.7765060E+07	558.52
.83011	8.5279840E+04	4.7631116E+07	558.53
.84001	8.5205251E+04	4.7592350E+07	558.56
.85012	8.5219901E+04	4.7603442E+07	558.60
.85617	8.5236961E+04	4.7615294E+07	558.62
.87004	8.5239912E+04	4.7613376E+07	558.65
.88005	8.5224810E+04	4.7612265E+07	558.67
.89012	8.5153610E+04	4.7573612E+07	558.68
.90013	8.5034214E+04	4.7507903E+07	558.69
.91018	8.4921660E+04	4.7446462E+07	558.71
.92003	8.4789254E+04	4.7373665E+07	558.72
.93003	8.4585424E+04	4.7260284E+07	558.73
.94006	8.4332775E+04	4.7119694E+07	558.73
.95004	8.4133386E+04	4.7009576E+07	558.75
.96805	8.4001069E+04	4.6937622E+07	558.77
.97019	8.3879090E+04	4.6871592E+07	558.80
.98017	8.3749242E+04	4.6801373E+07	558.83
.99016	8.3650306E+04	4.6748791E+07	558.86
1.00013	8.3577220E+04	4.6710517E+07	558.89
1.01003	8.3483239E+04	4.6660040E+07	558.92
1.02009	8.3363850E+04	4.6595179E+07	558.94
1.03008	8.3228098E+04	4.6521139E+07	558.96
1.04013	8.3054020E+04	4.6425558E+07	558.98
1.05007	8.2852281E+04	4.6314604E+07	559.00
1.06002	8.2670415E+04	4.6215242E+07	559.03
1.07002	8.2522495E+04	4.6135141E+07	559.06
1.08015	8.2370134E+04	4.6052391E+07	559.09
1.09014	8.2204789E+04	4.5962487E+07	559.12
1.10008	8.2058899E+04	4.5883869E+07	559.16
1.11016	8.1925541E+04	4.5812566E+07	559.20
1.12013	8.1778838E+04	4.5733459E+07	559.23
1.13009	8.1614966E+04	4.5644519E+07	559.27

Table 6.2.1-23 Break Mass And Energy Flow From A Double-Ended Cold Leg Guillotine (Page 6 of 10)

1.14014	8.1440550E+04	4.5549601E+07	559.30
1.15001	8.1233556E+04	4.5436190E+07	559.33
1.16016	8.0973459E+04	4.5290008E+07	559.36
1.17009	8.0728542E+04	4.5158681E+07	559.39
1.18005	8.0505981E+04	4.5037156E+07	559.43
1.19012	8.0276950E+04	4.4911852E+07	559.46
1.20014	8.0035318E+04	4.4779364E+07	559.50
1.21009	7.9809170E+04	4.4655876E+07	559.53
1.22016	7.9592878E+14	4.4537896E+07	559.57
1.23000	7.9352507E+04	4.4406088E+07	559.61
1.24005	7.9096790E+04	4.4266220E+07	559.65
1.25005	7.8854282E+04	4.4133853E+07	559.69
1.28004	7.8874567E+04	4.3707164E+07	559.81
1.29005	7.7872559E+04	4.3597579E+07	559.86
1.31002	7.7659289E+04	4.3481315E+07	559.90
1.31001	7.7437311E+04	4.3359385E+07	559.93
1.32002	7.7200854E+04	4.3229663E+07	559.96
1.33004	7.6991619E+04	4.3115571E+07	560.00
1.34011	7.6778950E+04	4.2999371E+07	560.04
1.35008	7.6585125E+04	4.2893425E+07	560.07
1.36005	7.6481499E+04	4.2793469E+07	560.11
1.37017	7.6219116E+04	4.2694227E+07	560.15
1.38018	7.6034026E+04	4.2593341E+07	560.19
1.39004	7.5849854E+04	4.2492871E+07	560.22
1.40005	7.5667828E+04	4.2393603E+07	560.26
1.41010	7.5482159E+04	4.2292249E+07	560.29
1.42010	7.5301664E+04	4.2193864E+07	560.33
1.43011	7.6139111E+04	4.2105856E+07	560.37
1.44001	7.5009647E+04	4.2036718E+07	560.42
1.45008	7.4931627E+04	4.1196682E+07	560.47
1.46010	7.4867239E+04	4.1963757E+07	560.51
1.47017	7.4753854E+04	4.1902791E+07	560.54
1.48013	7.4584355E+04	4.1810194E+07	560.58
1.49012	7.4392609E+04	4.1705259E+07	560.61
1.50012	7.4197644E+04	4.1598646E+07	560.65
1.51013	7.4006729E+04	4.1494259E+07	560.68
1.52018	7.3815196E+04	4.1389571E+07	560.72
1.53011	7.3936081E+04	4.1291938E+07	560.76
1.54014	7.3469148E+04	4.1201423E+07	560.80
1.55011	7.3320510E+04	4.1121431E+07	560.84
1.56014	7.3181275E+04	4.1046863E+07	560.89
1.57010	7.3026251E+04	4.0963136E+07	560.94
1.58010	7.2837043E+04	4.0859867E+07	560.98

Table 6.2.1-23 Break Mass And Energy Flow From A Double-Ended Cold Leg Guillotine (Page 7 of 10)

1.59014	7.2631221E+04	4.0747358E+07	561.02
1.61016	7.2432964E+04	4.0639399E+07	561.06
1.61016	7.2278283E+04	4.0556143E+07	561.11
1.62016	7.2205320E+04	4.0519020E+07	561.16
1.63013	7.2141973E+04	4.0487008E+07	561.21
1.64018	7.2049835E+04	4.0438786E+07	561.26
1.65012	7.1952016E+04	4.0387622E+07	561.31
1.66000	7.1844712E+04	4.0331199E+07	561.37
1.67014	7.1713907E+14	4.0261546E+07	561.42
1.68057	7.1575164E+04	4.0187249E+07	561.47
1.69009	7.1433733E+04	4.0111463E+07	561.52
1.70017	7.1277095E+04	4.0027105E+07	561.57
1.71018	7.1122032E+04	3.9943672E+07	561.62
1.75021	7.0507943E+04	3.9613307E+07	561.83
1.76009	7.0358714E+04	3.9533318E+07	561.88
1.77019	7.0222660E+04	3.9460948E+07	561.94
1.78019	7.0103256E+04	3.9398041E+07	562.00
1.79014	7.0001645E+04	3.9345011E+07	562.12
1.80016	6.9902190E+04	3.9293287E+07	562.18
1.81014	6.9809830E+04	3.9245446E+07	562.24
1.82015	6.9723055E+04	3.9200754E+07	562.29
1.83015	6.9630793E+04	3.9152920E+07	562.35
1.84003	6.9530524E+04	3.9100463E+07	562.41
1.85001	6.9432184E+04	3.9049105E+07	562.47
1.86011	6.9343257E+04	3.9003180E+07	562.52
1.87003	6.9260802E+04	3.8960691E+07	562.58
1.88007	6.9176562E+04	3.8917304E+07	562.63
1.89010	6.9092618E+04	3.8873771E+07	562.69
1.90007	6.9003582E+04	3.8827388E+07	562.74
1.91019	6.8908110E+04	3.8777285E+07	562.79
1.92010	6.8805926E+04	3.8723321E+07	562.84
1.93016	6.8697856E+04	3.8665875E+07	562.89
1.94013	6.8580875E+04	3.8603405E+07	562.94
1.95012	6.8467934E+04	3.8543229E+07	562.99
1.96015	6.8363888E+04	3.8488157E+07	563.04
1.97008	6.8266519E+04	3.8436705E+07	563.09
1.98019	6.8166411E+04	3.8383543E+07	563.13
1.99010	6.8062479E+04	3.8328037E+07	563.17
2.00009	6.7955066E+04	3.8270409E+07	563.21
2.01004	6.7847138E+04	3.8212316E+07	563.25
2.02017	6.7766440E+04	3.8169703E+07	563.29
2.03017	6.7709804E+04	3.8140337E+07	563.33
2.04017	6.7640349E+04	3.8103566E+07	563.36

Table 6.2.1-23 Break Mass And Energy Flow From A Double-Ended Cold Leg Guillotine (Page 8 of 10)

2.05012	6.7567787E+04	3.8064924E+07	563.36
2.06017	6.7489652E+04	3.8023025E+07	563.39
2.07014	6.7395491E+04	3.7971956E+07	563.42
2.08012	6.7294517E+04	3.7916962E+07	563.45
2.09012	6.7180594E+04	3.7854570E+07	563.47
2.10000	6.7053291E+04	3.7784487E+07	563.50
2.11005	6.6918837E+04	3.7710383E+07	563.52
2.12005	6.6783490E+04	3.7635639E+07	563.55
2.13015	6.6634430E+14	3.7553098E+07	563.57
2.14013	6.6483182E+04	3.7469266E+07	563.59
2.15015	6.6334740E+04	3.7386995E+07	563.61
2.16011	6.6191907E+04	3.7307832E+07	563.63
2.17006	6.6059863E+04	3.7234710E+07	563.65
2.18002	6.5933205E+04	3.7164554E+07	563.67
2.22006	6.5472840E+04	3.6909501E+07	563.74
2.23010	6.5360076E+04	3.6847037E+07	563.75
2.24010	6.5251847E+04	3.6787039E+07	563.77
2.25007	6.5145767E+04	3.6728253E+07	563.79
2.26016	6.5051047E+04	3.6675851E+07	563.80
2.27009	6.4966735E+04	3.6629350E+07	563.82
2.28000	6.4871310E+04	3.6576445E+07	563.83
2.29019	6.4761651E+04	3.6515617E+07	563.85
2.30004	6.4647948E+04	3.6452469E+07	563.86
2.31012	6.4535167E+04	3.6389939E+07	563.88
2.32009	6.4424230E+04	3.6348461E+07	563.89
2.33002	6.4315209E+04	3.6268106E+07	563.91
2.34022	6.4206194E+04	3.6207774E+07	563.93
2.35007	6.4100408E+04	3.6149250E+07	563.95
2.36008	6.3989278E+04	3.6087769E+07	563.97
2.37011	6.3868104E+04	3.6020573E+07	563.98
2.38011	6.3745218E+04	3.5952544E+07	564.00
2.39013	6.3629468E+04	3.5888539E+07	564.02
2.40008	6.3516321E+04	3.5826065E+07	564.05
2.41016	6.3407662E+04	3.5766110E+07	564.07
2.42012	6.3298226E+04	3.5705745E+07	564.09
2.43004	6.3189783E+04	3.5645942E+07	564.11
2.44010	6.3079669E+04	3.5585210E+07	564.13
2.45013	6.2968324E+04	3.5523846E+07	564.15
2.46012	6.2858904E+04	3.5463541E+07	564.18
2.47009	7.2751233E+04	3.5414285E+07	564.20
2.48011	7.2649538E+04	3.5348400E+07	564.22
2.49010	7.2546417E+04	3.5291722E+07	564.25
2.50017	7.2441011E+04	3.5233761E+07	564.27

Table 6.2.1-23 Break Mass And Energy Flow From A Double-Ended Cold Leg Guillotine (Page 9 of 10)

2.51015	6.2360248E+04	3.5189781E+07	564.30
2.52017	6.2285701E+04	3.5149251E+07	564.32
2.53002	6.2213377E+04	3.5109968E+07	564.35
2.54011	6.2144447E+04	3.5072628E+07	564.37
2.55004	6.2074492E+04	3.5034700E+07	564.40
2.56011	6.2002522E+04	3.4995675E+07	564.42
2.57012	6.1925868E+04	3.4954001E+07	564.45
2.58007	6.1839278E+04	3.4906740E+07	564.48
2.59017	6.1751078E+14	3.4858631E+07	564.50
2.60012	6.1655475E+04	3.4806378E+07	564.53
2.61012	6.1557127E+04	3.4752559E+07	564.56
2.62017	6.1453393E+04	3.4695764E+07	564.59
2.63012	6.1345872E+04	3.4636880E+07	564.62
2.64017	6.1236417E+04	3.4576903E+07	564.65
2.65000	6.1120804E+04	3.4513455E+07	564.68
2.69015	6.0636936E+04	3.4247943E+07	564.80
2.70015	6.0514075E+04	3.4180534E+07	564.84
2.71015	6.0392973E+04	3.4114134E+07	564.87
2.72001	6.0275870E+04	3.4049934E+07	564.90
2.73007	6.0158531E+04	3.3985641E+07	564.93
2.74011	6.0146178E+04	3.3924017E+07	564.97
2.75004	5.9935107E+04	3.3863317E+07	565.00
2.76011	5.9827207E+04	3.3804290E+07	565.03
2.77002	5.9721999E+04	3.3746760E+07	565.06
2.78011	5.9617017E+04	3.3689833E+07	565.10
2.78012	5.9516318E+04	3.3634378E+07	565.13
2.80007	5.9424684E+04	3.3584464E+07	565.16
2.81011	5.9332760E+04	3.3534409E+07	565.19
2.82007	5.9239848E+04	3.3483771E+07	565.22
2.83021	5.9146625E+04	3.3432986E+07	565.26
2.84003	5.9056308E+04	3.3383826E+07	565.29
2.85010	5.8965263E+04	3.3334296E+07	565.32
2.86006	5.8878112E+04	3.3286969E+07	565.35
2.87012	5.8792590E+04	3.3240574E+07	565.39
2.88011	5.8703158E+04	3.3191991E+07	565.42
2.89003	5.8611039E+04	3.3141918E+07	565.46
2.90000	5.8516521E+04	3.3090534E+07	565.49
2.91008	5.8420275E+04	3.3038213E+07	565.53
2.92007	5.8323527E+04	3.2985689E+07	565.56
2.93019	5.8224442E+04	3.2931900E+07	565.60
2.94006	5.8124578E+04	3.2877642E+07	565.64
2.95006	5.8018131E+04	3.2819800E+07	565.68
2.96010	5.7908517E+04	3.2760201E+07	565.72

Table 6.2.1-23 Break Mass And Energy Flow From A Double-Ended Cold Leg Guillotine (Page 10 of 10)

2.97010	5.7797561E+04	3.2699923E+07	565.77
2.98015	5.7687325E+04	3.2640079E+07	565.81
2.99002	5.7576594E+04	3.2580065E+07	565.86
3.00006	5.7464688E+04	3.2519421E+07	565.90

Table 6.2.1-24 Break Mass And Energy Flow From A Double-Ended Hot Leg Break (Page 1 of 7)

Time (sec)	Mass Flow (lbm/sec)	Energy Flow (Btu/sec)	Avg. Enthalpy (Btu/lbm)
0.00000	9.5000000E+03	6.1732900E+06	649.82
0.00250	8.3366021E+04	5.3981726E+07	647.53
0.00502	7.7261661E+04	4.9885082E+07	645.66
0.00751	6.9212037E+04	4.4671873E+07	645.44
0.01002	6.9198929E+04	4.4701697E+07	645.99
0.01251	7.0256102E+04	4.5378071E+07	645.90
0.01502	7.0488357E+04	4.5540990E+07	646.08
0.01750	7.1061056E+04	4.5928796E+07	646.33
0.02001	7.1751507E+04	4.6383734E+07	646.45
0.02251	7.2329964E+04	4.6764991E+07	646.55
0.02501	7.2847529E+04	4.7105934E+07	646.64
0.02751	7.3317785E+04	4.7415620E+07	646.71
0.03000	7.3729839E+04	4.7687553E+07	646.79
0.03251	7.4102693E+04	4.7933725E+07	646.86
0.03503	7.4425566E+04	4.8146411E+07	646.91
0.03750	7.4680137E+04	4.8313842E+07	646.94
0.04002	7.4861813E+04	4.8433649E+07	646.97
0.04251	7.4970099E+04	4.8506310E+07	647.01
0.04502	7.5032184E+04	4.8550423E+07	647.07
0.04750	7.5091651E+04	4.8596843E+07	647.17
0.05002	7.5182404E+04	4.8666717E+07	647.32
0.05252	7.5339506E+04	4.8784748E+07	647.53
0.05501	7.5615681E+04	4.8985032E+07	647.82
0.05752	7.6070086E+04	4.9303128E+07	648.13
0.06003	7.6618468E+04	4.9677350E+07	648.37
0.06250	7.7167510E+04	5.0046721E+07	648.55
0.06502	7.7719314E+04	5.0413314E+07	648.66
0.06751	7.8269593E+04	5.0773994E+07	648.71
0.07002	7.8788572E+04	5.1111466E+07	648.72
0.07255	7.9317101E+04	5.1952175E+07	648.69
0.07501	7.9810365E+04	5.1767914E+07	648.64
0.07753	8.0303796E+04	5.2081424E+07	648.55
0.08001	8.0766439E+04	5.2373661E+07	648.46
0.08252	8.1217125E+04	5.2656350E+07	648.34
0.08506	8.1642762E+04	5.2921379E+07	648.21
0.08756	8.2029389E+04	5.3160708E+07	648.07
0.09002	8.2387885E+04	5.3380563E+07	647.92
0.09250	8.2708495E+04	5.3574748E+07	647.75
0.09501	8.2989585E+04	5.3742451E+07	647.58
0.09753	8.3215688E+04	5.3873165E+07	647.39
0.10008	8.3360910E+04	5.3950565E+07	647.19
0.10251	8.3384152E+04	5.3948819E+07	646.99

Table 6.2.1-24 Break Mass And Energy Flow From A Double-Ended Hot Leg Break (Page 2 of 7)

0.10504	8.3224047E+04	5.3827401E+07	646.78
0.10758	8.2846812E+04	5.3565471E+07	646.56
0.11010	8.2310335E+04	5.3203143E+07	646.37
0.11251	8.1735809E+04	5.2818443E+07	646.21
0.11505	8.1098574E+04	5.2396220E+07	646.08
0.11757	8.0492200E+04	5.1995488E+07	645.97
0.12002	7.9906381E+04	5.1608231E+07	645.86
0.12255	7.9318382E+04	5.1220985E+07	645.76
0.12510	7.8761980E+04	5.0855277E+07	645.68
0.12764	7.8253342E+04	5.0521446E+07	645.61
0.13016	7.7799330E+04	5.0223807E+07	645.56
0.13263	7.7397664E+04	4.9959595E+07	645.49
0.13508	7.7031158E+04	4.9718321E+07	645.43
0.13762	7.6689163E+04	4.9492689E+07	645.37
0.14012	7.6380797E+04	4.9287963E+07	645.29
0.14260	7.6093060E+04	4.9096220E+07	645.21
0.14502	7.5829184E+04	4.8919745E+07	645.13
0.14758	7.5565368E+04	4.8742549E+07	645.04
0.15014	7.5315976E+04	4.8574325E+07	644.94
0.15256	7.5093228E+04	4.8423506E+07	644.83
0.15502	7.4878984E+04	4.8277964E+07	644.75
0.15758	7.4673649E+04	4.8137969E+07	644.64
0.16009	7.4492138E+04	4.8013597E+07	644.55
0.16260	7.4333611E+04	4.7904109E+07	644.45
0.16519	7.4195208E+04	4.7807226E+07	644.34
0.16754	7.4087107E+04	4.7730165E+07	644.24
0.17019	7.3982177E+04	4.7654413E+07	644.13
0.17254	7.3903197E+04	4.7595794E+07	644.03
0.17519	7.3821471E+04	4.7533480E+07	643.90
0.17758	7.3750923E+04	4.7478555E+07	643.77
0.18002	7.3679828E+04	4.7422428E+07	643.63
0.18270	8.3600631E+04	4.7359686E+07	643.47
0.18511	8.3530498E+04	4.7303918E+07	643.32
0.18772	8.3456456E+04	4.7244677E+07	643.17
0.19014	8.3391431E+04	4.7192111E+07	643.02
0.19261	8.3329933E+04	4.7141607E+07	642.87
0.19518	8.3272436E+04	4.7041292E+07	642.71
0.19762	8.3221499E+04	4.7049902E+07	642.57
0.20002	8.3178925E+04	4.7012004E+07	642.43
0.20252	8.3137257E+04	4.6974010E+07	642.27
0.20503	8.3098113E+04	4.6937497E+07	642.12
0.20750	8.3060530E+04	4.6902038E+07	641.96

Table 6.2.1-24 Break Mass And Energy Flow From A Double-Ended Hot Leg Break (Page 3 of 7)

0.21008	7.3019492E+04	4.6863606E+07	641.80
0.21271	7.2971863E+04	4.6820468E+07	641.62
0.21504	7.2924285E+04	4.6778800E+07	641.47
0.21762	7.2863276E+04	4.6727166E+07	641.30
0.22021	7.2792031E+04	4.6668884E+07	641.13
0.22253	7.2719274E+04	4.6611036E+07	640.97
0.22502	7.2632208E+04	4.6543311E+07	640.81
0.22772	7.2528486E+04	4.6469108E+07	640.63
0.23020	7.2 24247E+04	4.6385682E+07	640.47
0.23265	7.2315195E+04	4.6304601E+07	640.32
0.23510	7.2201162E+04	4.6220523E+07	640.16
0.23754	7.2042610E+04	4.6133707E+07	640.01
0.24018	7.1951100E+04	4.6037989E+07	639.85
0.24256	7.1830885E+04	4.5950825E+07	639.71
0.24520	7.1697100E+04	4.5853958E+07	639.55
0.24769	7.1572088E+04	4.5763462E+07	639.40
0.25022	7.1446885E+04	4.5672780E+07	639.26
0.25255	7.1334337E+04	4.5591101E+07	639.12
0.25518	7.1211486E+04	4.5501645E+07	638.96
0.25761	7.1102069E+04	4.5421652E+07	638.82
0.26008	7.0995474E+04	4.5343313E+07	638.68
0.26261	7.0891562E+04	4.5266449E+07	638.53
0.26519	7.0790622E+04	4.5191236E+07	638.38
0.26733	7.0702525E+04	4.5125078E+07	638.24
0.27009	7.0611282E+04	4.5056173E+07	638.09
0.27266	7.0523851E+04	4.4989715E+07	637.94
0.27520	7.0442164E+04	4.4926984E+07	637.79
0.27758	7.0368655E+04	4.4869978E+07	637.64
0.28017	7.0292576E+04	4.4810367E+07	637.48
0.28254	7.0224050E+04	4.4756397E+07	637.34
0.28513	7.0151601E+04	4.4699085E+07	637.18
0.28770	7.0081456E+04	4.4643369E+07	637.02
0.29012	7.0015740E+04	4.4591188E+07	636.87
0.29270	6.9947068E+04	4.4536538E+07	636.72
0.29504	6.9885463E+04	4.4487471E+07	636.58
0.29760	6.9818055E+04	4.4433794E+07	636.42
0.30018	6.9750621E+04	4.4380130E+07	636.27
0.302 5	6.9688876E+04	4.4331051E+07	636.13
0.30520	6.9619964E+04	4.4276364E+07	635.97
0.30766	6.9555942E+04	4.4225658E+07	635.83
0.31020	6.9490098E+04	4.4173606E+07	635.68
0.31256	6.9428756E+04	4.4125198E+07	635.55

Table 6.2.1-24 Break Mass And Energy Flow From A Double-Ended Hot Leg Break (Page 4 of 7)

0.31502	6.9364785E.04	4.4074786E+07	635.41
0.31776	6.9292945E+04	4.4018417E+07	635.25
0.32026	6.9228329E+04	4.3967794E+07	635.11
0.32278	6.9162511E+04	4.3916352E+07	634.97
0.32500	6.9104546E+04	4.3871173E+07	634.85
0.32751	6.9039481E+04	4.3820519E+07	634.72
0.33003	6.8974226E+04	4.3769791E+07	634.58
0.33255	6.8909148E+04	4.3719287E+07	634.45
0.33507	6.8844266E+04	4.3669001E+07	634.32
0.33759	6.8779396E+04	4.3618794E+07	634.18
0.34012	6.8714551E+04	4.3568709E+07	634.05
0.34264	6.8679846E+04	4.3518771E+07	633.42
0.34517	6.8585131E+04	4.3468932E+07	633.80
0.34770	6.8520434E+04	4.3418197E+07	633.67
0.35022	6.8455793E+04	4.3369591E+07	633.54
0.35275	6.8391227E+04	4.3320125E+07	633.42
0.35528	6.8326749E+04	4.3270811E+07	633.29
0.35753	6.8269558E+04	4.3227127E+07	633.18
0.36006	6.8205347E+04	4.3179176E+07	633.06
0.36260	6.8141484E+04	4.3129458E+07	632.44
0.36514	6.8077896E+04	4.3081018E+07	632.82
0.34769	6.8014722E+04	4.3032888E+07	632.70
0.37076	6.7952063E+04	4.2985130E+07	632.58
0.37255	6.7896887E+04	4.2943032E+07	632.47
0.37515	6.7835502E+04	4.2896141E+07	632.36
0.37777	6.7775061E+04	4.2849802E+07	632.24
0.38012	6.7722086E+04	4.2809071E+07	632.13
0.38280	6.7663597E+04	4.2763911E+07	632.01
0.38521	6.7612661E+04	4.2724370E+07	631.90
0.38766	6.7562816E+04	4.2685441E+07	631.79
0.39014	6.7514175E+04	4.2647182E+07	631.68
0.39267	6.7466809E+04	4.2609616E+07	631.56
0.39525	6.7420771E+04	4.2572755E+07	631.45
0.39755	6.7381410E+04	4.2541088E+07	631.35
0.40024	6.7338142E+04	4.2505555E+07	631.23
0.40263	6.7301204E+04	4.2475007E+07	631.12
0.40505	6.7265696E+04	4.2445335E+07	631.01
0.40754	6.7230577E+04	4.2415619E+07	630.90
0.41008	6.7196212E+04	4.2368271E+07	630.78
0.41265	6.7162616E+04	4.2357391E+07	630.67
0.41522	6.7129564E+04	4.2328625E+07	630.55
0.41759	6.7099339E+04	4.2302439E+07	630.44

Table 6.2.1-24 Break Mass And Energy Flow From A Double-Ended Hot Leg Break (Page 5 of 7)

0.42016	6.7047039E+04	4.2274388E+06	630.33
0.42263	6.7035782E+04	4.2247295E+07	630.22
0.42509	6.7004568E+04	4.2220317E+07	630.11
0.42767	6.6971284E+04	4.2191629E+07	630.00
0.43024	6.6936789E+04	4.2162210E+07	629.88
0.43281	6.6901398E+04	4.2132309E+07	629.77
0.43510	6.6868952E+04	4.2105162E+07	629.67
0.43779	6.6829329E+04	4.2072364E+07	629.55
0.44015	6.6792662E+04	4.204242 E+07	629.45
0.44263	6.6752389E+04	4.2010062E+07	629.34
0.44503	6.6712436E+04	4.1978278E+07	629.24
0.44776	6.6669435E+04	4.1941233E+07	629.13
0.45031	6.6620128E+04	4.1905799E+07	629.03
0.45260	6.6577783E+04	4.1872966E+07	628.93
0.45518	6.6529174E+04	4.1835621E+07	628.83
0.45779	6.6474055E+04	4.1797358E+07	628.73
0.46006	6.6434522E+04	4.1763609E+07	628.64
0.46262	6.6383646E+04	4.1725280E+07	628.55
0.46518	6.6332450E+04	4.1686877E+07	628.45
0.46775	6.6280967E+04	4.1648404E+07	628.36
0.47030	6.6229638E+04	4.1610156E+07	628.27
0.47255	6.6184 40E+04	4.1576904E+07	628.19
0.47512	6.6134141E+04	4.1539141E+07	628.10
0.47771	6.6083853E+04	4.1501763E+07	628.02
0.48032	6.6034259E+04	4.1464870E+07	627.93
0.18262	6.5991507E+04	4.1433014E+07	627.85
0.18527	6.5943495E+04	4.1397152E+07	627.77
0.18762	6.5902325E+04	4.1366304E+07	627.69
0.49034	6.5856311E+04	4.1331688E+07	627.60
0.49274	6.5817000E+04	4.1301975E+07	627.51
0.49517	6.5778874E+04	4.1273019E+07	627.45
0.49765	6.5741321E+04	4.1244325E+07	627.37
0.50024	6.5703604E+04	4.1215508E+07	627.29
0.51012	6.5570446E+04	4.1111667E+07	626.98
0.52016	6.5456120E+04	4.1020126E+07	626.68
0.53003	6.5347836E+04	4.0933067E+07	626.39
0.54020	6.5234080E+04	4.0842628E+07	626.09
0.55004	6.5114485E+04	4.0750005E+07	625.82
0.56004	6.4980058E+04	4.06448900+07	625.56
0.57018	6.4832681E+04	4.0540699E+07	625.31
0.58018	6.4683520E+04	4.0432982E+07	625.09
0.59033	6.4537352E+04	4.0328174e+07	624.88

Table 6.2.1-24 Break Mass And Energy Flow From A Double-Ended Hot Leg Break (Page 6 of 7)

0.60028	6.4405682E+04	4.0233863E+07	624.69
0.61006	6.4291379E+04	4.0151570E+07	624.52
0.62028	6.4185296E+04	4.0074475E+07	624.36
0.63028	6.4088543E+04	4.0003799E+07	624.20
0.64037	6.3991051E+04	3.9932853E+07	624.04
0.65032	6.3890693E+04	3.9860535E+07	623.89
0.66003	6.3787662E+04	3.9787307E+07	623.75
0.67035	6.3673290E+04	3.970717 E+07	623.61
0.68020	6.3560494E+04	3.9629252E+07	623.49
0.69008	6.3444844E+04	3.9550368E+07	623.38
0.70037	6.3323594E+04	3.9468650E+07	623.29
0.71029	6.3206689E+04	3.9390687E+07	623.20
0.72021	6.3092848E+04	3.9315454E+07	623.14
0.73010	6.2978206E+04	3.9240792E+07	623.09
0.74021	6.2863312E+04	3.9166115E+07	623.04
0.75002	6.2754080E+04	3.9094680E+07	622.98
0.76000	6.2641845E+04	3.9021892E+07	622.94
0.77025	6.2527645E+04	3.8948268E+07	622.90
0.78006	6.2420690E+04	3.8879349E+07	622.86
0.79033	6.2310561E+04	3.8809018E+07	622.83
0.80016	6.2205817E+04	3.8742510E+07	622.81
0.81028	6.2097447E+04	3.8674058E+07	622.80
0.82032	6.1988143E+04	3.8605382E+07	622.79
0.83026	6.1877208E+04	3.8536023E+07	622.78
0.84010	6.1764525E+04	3.8465890E+07	622.78
0.85016	6.1646530E+04	3.8392779E+07	622.79
0.86014	6.1528079E+04	3.8319750E+07	622.80
0.87013	6.1410582E+04	3.8247723E+07	622.82
0.88014	6.1295125E+04	3.8177357E+07	622.84
0.89016	6.1181918E+04	3.8108690E+07	622.88
0.90014	6.1070276E+04	3.8041150E+07	622.91
0.91001	6.0959110E+04	3.7973934E+07	622.94
0.92006	6.0843976E+04	3.7904302E+07	622.98
0.93002	6.0728862E+04	3.7834735E+07	623.01
0.94022	6.0611678E+04	3.7764186E+07	623.05
0.95016	6.0502372E+04	3.7698968E+07	623.10
0.96032	6.0399882E+04	3.7638703E+07	623.16
0.97003	6.0310970E+04	3.7587283E+07	623.22
0.98019	6.0224576E+04	3.7537977E+07	623.30
0.99034	6.0141262E+04	3.7490808E+07	623.38
1.00009	6.0061803E+04	3.7446007E+07	623.46
1.05030	5.9639533E+04	3.7210078E+07	623.92

Table 6.2.1-24 Break Mass And Energy Flow From A Double-Ended Hot Leg Break (Page 7 of 7)

1.10009	5.9161129E+04	3.6942041E+07	624.43
1.15005	5.8600069E+04	3.6621801E+07	624.94
1.20022	5.8110574E+04	3.6350936E+07	625.55
1.25009	5.7618787E+04	3.6075665E+07	626.11
1.30021	5.7172718E+04	3.5828693E+07	626.67
1.35018	5.6709129E+04	3.5567732E+07	627.20
1.40030	5.6244826E+04	3.5305636E+07	627.71
1.45011	5.5752608E+04	3.5023683E+07	628.20
1.50013	5.5230766E+04	3.4722152E+07	628.67
1.55010	5.4683919E+04	3.4403984E+07	629.14
1.60014	5.4098362E+04	3.4059730E+07	629.59
1.65001	5.3515705E+04	3.3718514E+07	630.07
1.70007	5.2934335E+04	3.3379803E+07	630.59
1.75010	5.2337170E+04	3.3032036E+07	631.14
1.80003	5.1749965E+04	3.2692856E+07	631.75
1.85003	5.1168201E+04	3.2359058E+07	632.41
1.90028	5.0574787E+04	3.2018724E+07	633.10
1.95028	4.9983327E+04	3.1680180E+07	633.81
2.00032	4.9412836E+04	3.1356166E+07	634.58

Table 6.2.1-25 Double-Ended Pump Suction LOCA

Event	Time (sec)
Rupture	0
Accumulator flow starts	15.5
Assumed initiation of ECCS	24.0
End of blowdown	24.0
Assumed initiation of spray system	55.0
Accumulators empty	56.1
End of reflood	167.0
Low level alarm of refueling water storage tank	1095
Beginning of recirculation phase of safeguards operation	1455

Table 6.2.1-26a Watts Bar Four Loop Plant Double-Ended Pump Suction Guillotine, Max. S.I., W/Froth (Page 1 of 2)

MASS BALANCE					
	0.0	**EOB**	**EOE**	**EOF**	**EOFIL**
Time (seconds)	0.00	24.00	167.00	727.00	1642.00
Mass (10^3 lbm)					
AVAILABLE					
Initial RCS & Acc	714.94	714.94	714.94	714.94	714.94
ADDED MASS					
Pumped Injection	0.00	0.00	173.01	940.91	2213.82
Total Added	0.00	0.00	173.01	940.91	2213.82
TOTAL AVAILABLE	714.94	714.94	887.95	1655.85	2928.76
DISTRIBUTION					
Reactor Coolant	504.64	64.99	148.27	148.27	148.27
Accumulator	210.30	156.67	0.00	0.00	0.00
Total Contents	714.94	221.66	148.27	148.27	148.27
EFFLUENT					
Break Flow	0.00	493.21	587.76	657.89	734.41
ECCS Spill	0.00	0.00	151.92	849.69	2046.08
Total Effluent	0.00	493.21	739.68	1507.58	2780.49
TOTAL ACCOUNTABLE	714.94	714.87	887.95	1655.85	2928.76
ENERGY BALANCE					
	0.0	**EOB**	**EOE**	**EOF**	**EOFIL**
Time (seconds)	0.00	24.00	167.00	727.00	1642.00
Energy (10^6 Btu)					
AVAILABLE					
In RCS, Acc, & S Gen	816.61	816.61	816.61	816.61	816.61
ADDED ENERGY					
Pumped Injection	0.00	0.00	15.22	67.44	154.00
Decay Heat	0.00	9.86	31.63	91.29	168.24
**Heat from Sec.	0.00	-3.58	-3.58	1.09	8.83
Total Added	0.00	6.28	43.27	159.82	331.07
TOTAL AVAILABLE	816.61	822.89	859.89	976.43	1147.68

Table 6.2.1-26a Watts Bar Four Loop Plant Double-Ended Pump Suction Guillotine, Max. S.I., W/Froth (Page 2 of 2)

DISTRIBUTION	302.29	17.33	28.61	28.61	28.61
Reactor Coolant	18.51	13.79	0.00	0.00	0.00
Accumulator	28.38	11.12	4.03	4.03	4.03
Core Stored	25.01	20.50	9.44	9.44	9.44
Thin Metal	30.78	30.78	23.74	23.74	23.74
Thick Metal	411.65	411.00	343.05	262.31	161.39
Steam Generator	816.61	504.51	408.86	328.13	227.21
Total Contents					
EFFULENT	0.00	318.39	437.48	520.34	608.85
Break Flow	0.00	0.00	13.37	118.15	291.00
ECCS Spill	0.00	318.39	450.85	638.49	899.85
Total Effluent					
	816.61	822.90	859.71	966.62	1127.06
TOTAL ACCOUNTABLE					

**Steam out and feedwater into the steam generator

Table 6.2.1-26b Watts Bar Four Loop Plant Double-Ended Pump Suction Guillotine, Min. S.I., W/Froth (Page 1 of 2)

MASS BALANCE

	0.0	EOB	EOE	EOF	EOFIL
Time (seconds)	0.00	24.00	195.00	310.00	1770.00
Mass (10^3 lbm)					
AVAILABLE					
Initial RCS & Acc	714.94	714.94	714.94	714.94	714.94
ADDED MASS					
Pumped Injection	0.00	0.00	105.76	182.51	1156.92
Total Added	0.00	0.00	105.76	182.51	1156.92
TOTAL AVAILABLE	714.94	714.94	820.70	897.45	1871.86
DISTRIBUTION					
Reactor Coolant	504.64	64.99	148.27	148.27	148.27
Accumulator	210.30	156.67	0.00	0.00	0.00
Total Contents	714.94	221.66	148.27	148.27	148.27
EFFLUENT					
Break Flow	0.00	493.21	589.64	623.74	790.41
ECCS Spill	0.00	0.00	82.80	125.45	933.18
Total Effluent	0.00	493.21	672.44	749.19	1723.59
TOTAL ACCOUNTABLE	714.94	714.87	820.70	897.46	1871.86

ENERGY BALANCE

	0.0	EOB	EOE	EOF	EOFIL
Time (seconds)	0.00	24.00	195.00	310.00	1770.00
Energy (10^6 Btu)					
AVAILABLE					
In RCS, Acc, & S Gen	816.61	816.61	816.61	816.61	816.61
ADDED ENERGY					
Pumped Injection	0.00	0.00	9.31	14.53	80.79
Decay Heat	0.00	9.86	35.25	49.10	177.93
**Heat from Sec.	0.00	-3.58	-3.58	-3.10	3.05
Total Added	0.00	6.28	40.98	60.53	261.77
TOTAL AVAILABLE	816.61	822.89	857.59	877.14	1078.38

Table 6.2.1-26b Watts Bar Four Loop Plant Double-Ended Pump Suction Guillotine, Min. S.I., W/Froth (Page 2 of 2)

DISTRIBUTION					
Reactor Coolant	302.29	17.33	28.61	28.61	28.61
Accumulator	18.51	13.79	0.00	0.00	0.00
Core Stored	28.38	11.12	4.03	4.03	4.03
Thin Metal	25.01	20.50	9.44	9.44	9.44
Thick Metal	30.78	30.78	22.70	22.70	22.70
Steam Generator	411.65	411.00	343.01	315.50	155.42
Total Contents	816.61	504.51	409.79	380.28	220.20
EFFULENT					
Break Flow	0.00	318.39	440.26	480.34	673.10
ECCS Spill	0.00	0.00	7.29	15.68	174.65
Total Effluent	0.00	318.39	447.55	496.02	847.75
TOTAL ACCOUNTABLE	816.61	822.90	857.33	876.30	1067.95

**Steam out and feedwater into the steam generator

Table 6.2.1-26c Watts Bar Four Loop Plant Double-Ended Pump Suction Guillotine, Min. S.I., W/Froth (Page 1 of 2)

MASS BALANCE					
	0.0	EOB	EOE	EOF	EOFIL
Time (seconds)	0.00	24.00	195.00	310.00	1770.00
Mass (10^3 lbm)					
AVAILABLE					
Initial RCS & Acc	714.94	714.94	714.94	714.94	714.94
ADDED MASS					
Pumped Injection	0.00	0.00	105.76	182.51	1156.92
Total Added	0.00	0.00	105.76	182.51	1156.92
TOTAL AVAILABLE	714.94	714.94	820.70	897.45	1871.86
DISTRIBUTION					
Reactor Coolant	504.64	64.99	148.27	148.27	148.27
Accumulator	210.30	156.67	0.00	0.00	0.00
Total Contents	714.94	221.66	148.27	148.27	148.27
EFFLUENT					
Break Flow	0.00	493.21	589.64	623.74	790.41
ECCS Spill	0.00	0.00	82.80	125.45	933.18
Total Effluent	0.00	493.21	672.44	749.19	1723.59
TOTAL ACCOUNTABLE	714.94	714.87	820.70	897.46	1871.86
ENERGY BALANCE					
	0.0	EOB	EOE	EOF	EOFIL
Time (seconds)	0.00	24.00	195.00	310.00	1770.00
Energy (10^6 Btu)					
AVAILABLE					
In RCS, Acc, & S Gen	816.61	816.61	816.61	816.61	816.61
ADDED ENERGY					
Pumped Injection	0.00	0.00	9.31	14.53	80.79
Decay Heat	0.00	9.86	35.25	49.10	177.93
**Heat from Sec.	0.00	-3.58	-3.58	-3.10	3.05
Total Added	0.00	6.28	40.98	60.53	261.77
TOTAL AVAILABLE	816.61	822.89	857.59	877.14	1078.38

Table 6.2.1-26c Watts Bar Four Loop Plant Double-Ended Pump Suction Guillotine, Min. S.I., W/Froth (Page 2 of 2)

DISTRIBUTION	302.29	17.33	28.61	28.61	28.61
Reactor Coolant	18.51	13.79	0.00	0.00	0.00
Accumulator	28.38	11.12	4.03	4.03	4.03
Core Stored	25.01	20.50	9.44	9.44	9.44
Thin Metal	30.78	30.78	22.70	22.70	22.70
Thick Metal	411.65	411.00	343.01	315.50	155.42
Steam Generator	816.61	504.51	409.79	380.28	220.20
Total Contents					
EFFULENT	0.00	318.39	440.26	480.34	673.10
Break Flow	0.00	0.00	7.29	15.68	174.65
ECCS Spill	0.00	318.39	447.55	496.02	847.75
Total Effluent					
	816.61	822.90	857.33	876.30	1067.95
TOTAL ACCOUNTABLE					

**Steam out and feedwater into the steam generator

Table 6.2.1-26d Watts Bar Four Loop
Plant 3 Ft^2 Pump Suction
(Page 1 of 2)

	MASS BALANCE			
	0.0	**EOB**	**EOE**	**REC**
Time (seconds)	0.00	41.50	182.50	1500.00
Mass (10^3 lbm)				
AVAILABLE				
Initial RCS & Acc	714.94	714.94	714.94	714.94
ADDED MASS				
Pumped Injection	0.00	0.00	171.82	1950.74
Total Added	0.00	0.00	171.82	1950.74
TOTAL AVAILABLE	714.94	714.94	886.76	2665.68
DISTRIBUTION				
Reactor Coolant	504.64	100.22	183.50	183.50
Accumulator	210.30	127.36	0.00	0.00
Total Contents	714.94	227.58	183.50	183.50
EFFLUENT				
Break Flow	0.00	487.28	575.98	702.28
ECCS Spill	0.00	0.00	127.28	1779.90
Total Effluent	0.00	487.28	703.26	2482.18
TOTAL ACCOUNTABLE	714.94	714.86	886.76	2665.68

	ENERGY BALANCE			
	0.0	**EOB**	**EOE**	**REC**
Time (seconds)	0.00	41.50	182.50	1500.00
Energy (10^6 Btu)				
AVAILABLE				
In RCS, Acc, & S Gen	812.86	812.86	812.86	812.86
ADDED ENERGY				
Pumped Injection	0.00	0.00	15.12	171.67
Decay Heat	0.00	13.23	33.83	157.33
**Heat from Sec.	0.00	-18.89	-18.89	-18.89
Total Added	0.00	-5.66	30.06	310.11
TOTAL AVAILABLE	812.86	807.20	842.92	1122.97

Table 6.2.1-26d Watts Bar Four Loop
Plant 3 Ft^2 Pump Suction
(Page 2 of 2)

DISTRIBUTION				
Reactor Coolant	302.29	24.06	35.34	35.34
Accumulator	18.51	11.21	0.00	0.00
Core Stored	28.38	7.65	4.03	4.03
Thin Metal	25.01	19.08	9.44	9.44
Thick Metal	30.78	30.78	23.82	11.80
Steam Generator	407.90	401.58	335.52	327.62
Total Contents	812.86	494.35	408.14	388.22
EFFULENT				
Break Flow	0.00	312.84	424.59	579.14
ECCS Spill	0.00	0.00	11.20	156.63
Total Effluent	0.00	312.84	435.79	735.77
TOTAL ACCOUNTABLE	812.86	807.19	843.93	1123.99

**Steam out and feedwater into the steam generator

Table 6.2.1-26e Watts Bar Four Loop Plant
Double-Ended Hot Leg Guillotine, Max. S.I
(Page 1 of 2)

	MASS BALANCE			
	0.0	**EOB**	**EOE**	**REC**
Time (seconds)	0.00	19.80	129.30	1500.00
Mass (10^3 lbm)				
AVAILABLE				
Initial RCS & Acc	714.94	714.94	714.94	714.94
ADDED MASS				
Pumped Injection	0.00	0.00	138.77	1989.52
Total Added	0.00	0.00	138.77	1989.52
TOTAL AVAILABLE	714.94	714.94	853.71	2704.46
DISTRIBUTION				
Reactor Coolant	504.64	66.31	241.15	272.69
Accumulator	210.30	164.85	0.00	0.00
Total Contents	714.94	231.16	241.15	272.69
EFFLUENT				
Break Flow	0.00	482.76	612.56	746.76
ECCS Spill	0.00	0.00	0.00	1685.01
Total Effluent	0.00	482.76	612.56	2431.77
TOTAL ACCOUNTABLE	714.94	713.92	853.71	2704.46

	ENERGY BALANCE			
	0.0	**EOB**	**EOE**	**REC**
Time (seconds)	0.00	19.80	129.30	1500.00
Energy (10^6 Btu)				
AVAILABLE				
In RCS, Acc, & S Gen	814.71	814.71	814.71	814.71
ADDED ENERGY				
Pumped Injection	0.00	0.00	12.21	175.08
Decay Heat	0.00	8.83	26.33	156.93
**Heat from Sec.	0.00	-0.18	-0.18	-0.18
Total Added	0.00	8.65	38.36	331.83
TOTAL AVAILABLE	814.71	823.35	853.07	1146.53

Table 6.2.1-26e Watts Bar Four Loop Plant
Double-Ended Hot Leg Guillotine, Max. S.I
(Page 2 of 2)

DISTRIBUTION				
Reactor Coolant	302.29	17.63	36.96	39.74
Accumulator	18.51	14.51	0.00	0.00
Core Stored	28.38	9.73	4.03	4.03
Thin Metal	25.01	21.02	9.44	9.44
Thick Metal	30.78	30.78	25.11	11.78
Steam Generator	409.74	406.21	389.32	386.72
Total Contents	814.71	499.87	464.86	451.71
EFFULENT				
Break Flow				
ECCS Spill	0.00	323.39	389.59	547.99
Total Effluent	0.00	0.00	0.00	148.28
	0.00	323.39	389.59	696.27
TOTAL ACCOUNTABLE				
	814.71	823.26	854.45	1147.98

**Steam out and feedwater into the steam generator.

Table 6.2.1-26f Watts Bar Four Loop Plant
Double-Ended Cold Leg Guillotine, Max. S.I
(Page 1 of 2)

	MASS BALANCE			
	0.0	**EOB**	**EOE**	**REC**
Time (seconds)	0.00	18.42	497.00	1500.00
Mass (10^3 lbm)				
AVAILABLE				
Initial RCS & Acc	714.94	714.94	714.94	714.94
ADDED MASS				
Pumped Injection	0.00	0.00	640.46	1994.73
Total Added	0.00	0.00	184.22	1994.73
TOTAL AVAILABLE	714.94	714.94	1355.40	2709.67
DISTRIBUTION				
Reactor Coolant	504.64	40.50	123.78	123.78
Accumulator	210.30	119.07	0.00	0.00
Total Contents	714.94	159.57	123.78	123.78
EFFLUENT				
Break Flow	0.00	502.29	601.39	686.99
ECCS Spill	0.00	52.60	630.23	1898.91
Total Effluent	0.00	554.89	1231.62	2585.90
TOTAL ACCOUNTABLE	714.94	714.46	1355.40	2709.90

	ENERGY BALANCE			
	0.0	**EOB**	**EOE**	**REC**
Time (seconds)	0.00	18.42	497.00	1500.00
Energy (10^6 Btu)				
AVAILABLE				
In RCS, Acc, & S Gen	816.50	816.50	816.50	816.50
ADDED ENERGY				
Pumped Injection	0.00	0.00	56.36	175.54
Decay Heat	0.00	8.47	68.97	156.77
**Heat from Sec.	0.00	-3.71	-3.71	-3.71
Total Added	0.00	4.76	121.62	328.59
TOTAL AVAILABLE	816.50	821.25	938.11	1145.09

Table 6.2.1-26f Watts Bar Four Loop Plant
Double-Ended Cold Leg Guillotine, Max. S.I
(Page 2 of 2)

DISTRIBUTION				
Reactor Coolant	302.29	11.35	22.63	22.63
Accumulator	18.51	10.48	0.00	0.00
Core Stored	28.38	16.03	4.03	4.03
Thin Metal	25.01	21.09	9.44	9.44
Thick Metal	30.78	30.78	15.76	11.78
Steam Generator	411.54	410.71	374.72	362.62
Total Contents	816.50	500.43	426.57	410.50
EFFULENT				
Break Flow	0.00	316.24	444.84	556.54
ECCS Spill	0.00	4.63	55.46	167.10
Total Effluent	0.00	320.87	500.30	723.64
TOTAL ACCOUNTABLE	816.50	821.30	926.87	1134.14

**Steam out and feedwater into the steam generator.

Table 6.2.1-27a Steam Line Break Blowdown

Time (sec)	Mass Flow Rate, m (lbm/sec)	Energy Flow Rate, e (10^6 Btu/sec)
0	19670	23.388
0.1150	19670	23.388
0.1151	14260	16.955
1.550	14260	16.955
1.551	21680	19.340
2.501	21680	19.340
2.502	42560	24.855
10.00	42560	24.855

Table 6.2.1-27b Steam Generator Enclosure Geometry

Nodes	Volume (ft^3)
51, 56	5193
52, 57	1577
53, 58	1276
54, 59	1648
55, 60	1363

Table 6.2.1-27d Peak Differential Pressure - Steam Generator Enclosure

Across Enclosure Walls		
Nodes	**Differential Press. (psi)**	**Time (sec)**
51 - Upper Compartment	38.0	3.69
52 - " "	37.0	3.75
53 - " "	37.0	3.76
54 - " "	36.8	3.77
55 - " "	36.8	3.77
Across Steam Generator Vessel		
Nodes	**Differential Press. (psi)**	**Time (sec)**
3 - 2	0.28	0.016
5 - 4	0.10	0.024
Across Steam Generator Separator Wall		
Nodes	**Differential Press. (psi)**	**Time (sec)**
55-59	19.39	0.0376

Table 6.2.1-28 Mass And Energy Release Rates Into Pressurizer Enclosure

Time (sec)	Mass Flow (10^3 lbm/sec)	Energy Flow (10^6 Btu/sec)
0.0	0.0	0.0
0.00251	5.0473	3.0977
0.00502	5.2333	3.2013
0.01002	5.1051	3.1226
0.01251	5.0746	3.1029
0.01755	5.3833	3.2753
0.02505	5.5402	3.3601
0.03259	5.8746	3.5479
0.04002	5.9221	3.5716
0.05005	5.6865	3.4332
0.07250	5.7877	3.4868
0.09001	5.4917	3.3157
0.11253	5.9404	3.5710
0.13756	5.5454	3.3445
0.15755	5.6392	3.3979
0.17760	5.4721	3.3026
0.19254	5.5189	3.3291
0.21254	5.4725	3.3025
0.23508	5.5465	3.3446
0.27752	5.5345	3.3378
0.35027	5.3649	3.2411
0.38001	5.2985	3.2031
0.41515	5.3825	3.2507
0.45006	5.2660	3.1842
0.57002	5.2492	3.1738
0.77015	5.1816	3.1336
1.00005	5.1562	3.1169
2.00015	5.0326	
		3.0400

Table 6.2.1-29 Pressurizer Geometric Data

Node	Volume (ft^3)
51	2262
52	502
53	667
54	647

Flow Path	k	f	L_1(ft)	D_H(ft)	A(ft^2)	L_{EQ}(ft)	a/A
51-52	0.5	0.02	13.3	3.3	20.9	12.1	0.16
51-53	0.5	0.02	13.8	4.8	27.7	12.1	0.21
51-54	0.5	0.02	13.8	4.8	26.9	12.1	0.21
53-52	0.0	0.02	8.0	3.5	42.6	8.0	0.28
54-52	0.0	0.02	8.0	1.5	18.5	8.0	0.12
53-54	0.0	0.02	8.0	0.9	11.3	8.0	0.06
52-lower compartment	1.0	0.02	12.0	3.3	22.1	12.0	1.00
53-lower compartment	1.0	0.02	12.0	4.8	27.7	12.0	1.00
54-lower compartment	1.0	0.02	12.0	4.8	24.4	12.0	1.00

Table 6.2.1-29a Peak Differential Pressure - Pressurizer Enclosure

Across Enclosure Walls		
Nodes	**Differential Press. (psi)**	**Time (sec)**
51 - Upper Compartment	11.4	0.06
52 - Upper Compartment	7.7	0.10
53 - Upper Compartment	7.7	0.10
54 - Upper Compartment	7.7	0.10
Across Pressurizer Vessel		
Nodes	**Differential Press. (psi)**	**Time (sec)**
52 - 53	-0.04	0.038
52 - 54	-0.23	0.046
53 - 54	-0.20	0.050

Table 6.2.1-30 Mass And Energy Release Rates 127 In^2 Cold Leg (Page 1 of 5)

Time (sec)	Mass Flow (lbm/sec)	Energy Flow (Btu/sec)	Avg. Enthalpy (Btu/lbm)
0.00000	0.	0.	0.00
0.00251	1.1982845E+04	6.7296740E+06	561.61
0.00502	1.5308269E+04	8.5974676E+06	561.62
0.00751	1.7398501E+04	9.7720743E+06	561.66
0.01001	1.9131092E+04	1.0741761E+07	561.48
0.01253	1.9948352E+04	1.1193906E+07	561.14
0.01503	1.9716482E+04	1.1050978E+07	560.49
0.01753	2.1905036E+04	1.2288321E+07	560.98
0.02006	2.2170478E+04	1.2426731E+07	560.51
0.02255	2.1560830E+04	1.2069870E+07	559.81
0.02506	2.1315153E+04	1.1923450E+07	559.39
0.02751	2.1626356E+04	1.2094688E+07	559.26
0.03001	2.1729350E+04	1.2147779E+07	559.05
0.03254	2.2084361E+04	1.2345775E+07	559.03
0.03503	2.2542872E+04	1.2603165E+07	559.08
0.03757	2.2895385E+04	1.2800602E+07	559.09
0.04009	2.3203939E+04	1.2973383E+07	559.10
0.04255	2.3446963E+04	1.3108981E+07	559.09
0.04502	2.3464854E+04	1.3115753E+07	558.95
0.04752	2.3298089E+04	1.3017402E+07	558.73
0.05001	2.3145127E+04	1.2927663E+07	558.55
0.05266	2.3018004E+04	1.2853122E+07	558.39
0.05514	2.2950194E+04	1.2812973E+07	558.29
0.05757	2.2904460E+04	1.2785675E+07	558.22
0.06012	2.2779154E+04	1.2713027E+07	558.10
0.06257	2.2510846E+04	1.2559119E+07	557.91
0.06500	2.2164087E+04	1.2360966E+07	557.70
0.06763	2.1888594E+04	1.2203861E+07	557.54
0.07009	2.1850009E+04	1.2182079E+07	557.53
0.07259	2.2019590E+04	1.2278820E+07	557.63
0.07503	2.2242956E+04	1.2406073E+07	557.75
0.07759	2.2352310E+04	1.2468054E+07	557.80
0.08002	2.2278656E+04	1.2425609E+07	557.74
0.08253	2.2036897E+04	1.2287536E+07	557.59
0.08504	2.1670113E+04	1.2078517E+07	557.38
0.08752	2.1266578E+04	1.1848983E+07	557.16
0.09004	2.0857542E+04	1.1617001E+07	556.97
0.09260	2.0466616E+04	1.1395523E+07	556.79
0.09500	2.0201194E+04	1.1245397E+07	556.67
0.09751	2.0053059E+04	1.1161858E+07	556.62
0.10007	2.0025022E+04	1.1146521E+07	556.63

Table 6.2.1-30 Mass And Energy Release Rates 127 In^2 Cold Leg (Page 2 of 5)

Time (sec)	Mass Flow (lbm/sec)	Energy Flow (Btu/sec)	Avg. Enthalpy (Btu/lbm)
0.10515	2.0170943E+04	1.1230305E+07	556.76
0.11011	2.0365487E+04	1.1341279E+07	556.89
0.11505	2.0647554E+04	1.1501747E+07	557.05
0.12008	2.0944972E+04	1.1670752E+07	557.21
0.12502	2.0977664E+04	1.1688856E+07	557.20
0.13007	2.0780412E+04	1.1576250E+07	557.08
0.13509	2.0500682E+04	1.1417226E+07	557.92
0.14001	2.0096382E+04	1.1187990E+07	556.72
0.14508	1.9569603E+04	1.0889944E+07	556.47
0.15009	1.9235427E+04	1.0701397E+07	556.34
0.15504	1.9138491E+04	1.0647134E+07	556.32
0.16006	1.9034644E+04	1.0588880E+07	556.30
0.16505	1.8879080E+04	1.0501358E+07	556.24
0.17007	1.8748148E+04	1.0427857E+07	556.21
0.17514	1.8720580E+04	1.0412805E+07	556.22
0.18005	1.8785810E+04	1.0450146E+07	556.28
0.18504	1.8911550E+04	1.0521664E+07	556.36
0.19010	1.9101126E+04	1.0629209E+07	556.47
0.19507	1.9311878E+04	1.0748514E+07	556.58
0.20009	1.9465602E+04	1.0835436E+07	556.65
0.21252	1.9617023E+04	1.0920644E+07	556.69
0.22507	1.9458748E+04	1.0830336E+07	556.58
0.23759	1.9647389E+04	1.0937376E+07	556.68
0.25011	1.9804565E+04	1.1026138E+07	556.75
0.26253	1.9395307E+04	1.0793667E+07	556.51
0.27516	1.8760813E+04	1.0435112E+07	556.22
0.28761	1.8860759E+04	1.0492777E+07	556.33
0.30014	1.9381793E+04	1.0787950E+07	556.60
0.31261	1.9557340E+04	1.0886714E+07	556.66
0.32509	1.9428795E+04	1.0813221E+07	556.56
0.33757	1.9460687E+04	1.0831309E+07	556.57
0.35003	1.9510288E+04	1.0859152E+07	556.59
0.36251	1.9334731E+04	1.0759415E+07	556.48
0.37512	1.9237392E+04	1.0704384E+07	556.44
0.38764	1.9172556E+04	1.0667882E+07	556.41
0.40007	1.9255351E+04	1.0715044E+07	556.47
0.41263	1.9518505E+04	1.0864131E+07	556.61
0.42512	1.9566788E+04	1.0890843E+07	556.60
0.43769	1.9443279E+04	1.0820460E+07	556.51
0.45005	1.9309158E+04	1.0744438E+07	556.44
0.46260	1.9325193E+04	1.0753755E+07	556.46

Table 6.2.1-30 Mass And Energy Release Rates 127 In^2 Cold Leg (Page 3 of 5)

Time (sec)	Mass Flow (lbm/sec)	Energy Flow (Btu/sec)	Avg. Enthalpy (Btu/lbm)
0.47515	1.9427001E+04	1.0811564E+07	556.52
0.48751	1.9463982E+04	1.0832327E+07	556.53
0.50010	1.9412566E+04	1.0802979E+07	556.49
0.52505	1.9416927E+04	1.0805655E+07	556.51
0.55001	1.9520981E+04	1.0864335E+07	556.55
0.57500	1.9439249E+04	1.0817886E+07	556.50
0.60009	1.9432289E+04	1.0814194E+07	556.51
0.62502	1.9570908E+04	1.0892620E+07	556.57
0.65001	1.9484134E+04	1.0843384E+07	556.52
0.67502	1.9537413E+04	1.0873742E+07	556.56
0.70006	1.9557525E+04	1.0885106E+07	556.57
0.72503	1.9556471E+04	1.0884559E+07	556.57
0.75008	1.9566953E+04	1.0890551E+07	556.58
0.77503	1.9575425E+04	1.0895394E+07	556.59
0.80011	1.9613175E+04	1.0916838E+07	556.61
0.82503	1.9623035E+04	1.0922366E+07	556.61
0.85012	1.9607042E+04	1.0913377E+07	556.60
0.87505	1.9625149E+04	1.0923689E+07	556.62
0.90005	1.9642366E+04	1.0933451E+07	556.63
0.92504	1.9652418E+04	1.0939158E+07	556.63
0.95005	1.9665495E+04	1.0946566E+07	556.64
0.97509	1.9657157E+04	1.0941870E+07	556.64
1.00024	1.9674801E+04	1.0951903E+07	556.65
1.02501	1.9674211E+04	1.0951587E+07	556.65
1.05002	1.9685832E+04	1.0958208E+07	556.65
1.07501	1.9689581E+04	1.0960360E+07	556.66
1.10003	1.9688612E+04	1.0959861E+07	556.66
1.12501	1.9688440E+04	1.0959833E+07	556.66
1.15013	1.9691682E+04	1.0961746E+07	556.67
1.17512	1.9694412E+04	1.0963374E+07	556.67
1.20008	1.9690643E+04	1.0961334E+07	556.68
1.22506	1.9686074E+04	1.0958870E+07	556.68
1.25010	1.9682378E+04	1.0956913E+07	556.69
1.27506	1.9685597E+04	1.0958900E+07	556.70
1.30002	1.9688096E+04	1.0960455E+07	556.70
1.32505	1.9673388E+04	1.0952302E+07	556.71
1.35006	1.9668391E+04	1.0949690E+07	556.72
1.37504	1.9669445E+04	1.0950509E+07	556.73
1.40009	1.9673705E+04	1.0950139E+07	556.74
1.42508	1.9668652E+04	1.0950505E+07	556.75
1.45004	1.9667081E+04	1.0950053E+07	556.76

Table 6.2.1-30 Mass And Energy Release Rates 127 In^2 Cold Leg (Page 4 of 5)

Time (sec)	Mass Flow (lbm/sec)	Energy Flow (Btu/sec)	Avg. Enthalpy (Btu/lbm)
1.47501	1.9675943E+04	1.0955165E+07	556.78
1.50004	1.9668050E+04	1.0950970E+07	556.79
1.52500	1.9665596E+04	1.0949895E+07	556.80
1.55005	1.9671043E+04	1.0953307E+07	556.82
1.57502	1.9666568E+04	1.0951104E+07	556.84
1.60008	1.9662702E+04	1.0949279E+07	556.86
1.62509	1.9658419E+04	1.0947234E+07	556.87
1.65008	1.9652327E+04	1.0944186E+07	556.89
1.67508	1.9641445E+04	1.0938449E+07	556.91
1.70000	1.9631684E+04	1.0933366E+07	556.92
1.72523	1.9622211E+04	1.0928465E+07	556.94
1.75002	1.9611372E+04	1.0922805E+07	556.96
1.77506	1.9600265E+04	1.0917009E+07	556.98
1.80004	1.9586316E+04	1.0909616E+07	556.00
1.82507	1.9570844E+04	1.0901377E+07	557.02
1.85004	1.9558044E+04	1.0894662E+07	557.04
1.87501	1.9547428E+04	1.0889183E+07	557.06
1.90005	1.9533703E+04	1.0881955E+07	557.09
1.92505	1.9518588E+04	1.0873945E+07	557.11
1.95013	1.9504270E+04	1.0866400E+07	557.13
1.97508	1.9490671E+04	1.0854264E+07	557.15
2.00001	1.9475975E+04	1.0851512E+07	557.17
2.02504	1.9460138E+04	1.0843124E+07	557.20
2.05011	1.9443525E+04	1.0834315E+07	557.22
2.07503	1.9425610E+04	1.0824775E+07	557.24
2.10004	1.9406458E+04	1.0814547E+07	557.27
2.12507	1.9386749E+04	1.0804030E+07	557.29
2.15003	1.9366596E+04	1.0793269E+07	557.31
2.17504	1.9344857E+04	1.0781622E+07	557.34
2.20000	1.9321966E+04	1.0769339E+07	557.36
2.22510	1.9298174E+04	1.0756568E+07	557.39
2.25001	1.9274722E+04	1.0743996E+07	557.41
2.27507	1.9250836E+04	1.0731182E+07	557.44
2.30008	1.9225729E+04	1.0717684E+07	557.47
2.32510	1.9199767E+04	1.0703706E+07	557.49
2.35000	1.9189974E+04	1.0698897E+07	557.53
2.37503	1.9159580E+04	1.0682347E+07	557.55
2.40011	1.9117138E+04	1.0659079E+07	557.57
2.42510	1.9108543E+04	1.0654963E+07	557.60
2.45013	1.9096201E+04	1.0648650E+07	557.63
2.47510	1.9042948E+04	1.0633130E+07	557.65

Table 6.2.1-30 Mass And Energy Release Rates 127 In^2 Cold Leg (Page 5 of 5)

Time (sec)	Mass Flow (lbm/sec)	Energy Flow (Btu/sec)	Avg. Enthalpy (Btu/lbm)
2.50011	1.9042948E+04	1.0619918E+07	557.68
2.52510	1.9038224E+04	1.0617984E+07	557.72
2.55010	1.9011234E+04	1.0603416E+07	557.74
2.57508	1.8977430E+04	1.0585017E+07	557.77
2.60006	1.8963744E+04	1.0578049E+07	557.80
2.62512	1.8950653E+04	1.0571411E+07	557.84
2.65025	1.8927642E+04	1.0559161E+07	557.87
2.67504	1.8894421E+04	1.0541167E+07	557.90
2.70018	1.8869044E+04	1.0527674E+07	557.93
2.72514	1.8846108E+04	1.0515517E+07	557.97
2.75003	1.8827068E+04	1.0505586E+07	558.00
2.77504	1.8815133E+04	1.0499666E+07	558.04
2.80005	1.8795707E+04	1.0489482E+07	558.08
2.82511	1.8768598E+04	1.0474967E+07	558.11
2.85006	1.8741259E+04	1.0460340E+07	558.14
2.87505	1.8723005E+04	1.0450857E+07	558.18
2.90005	1.8704799E+04	1.0441382E+07	558.22
2.92505	1.8678392E+04	1.0427269E+07	558.25
2.95003	1.8650919E+04	1.0412569E+07	558.29
2.97508	1.8627102E+04	1.0399953E+07	558.32
3.00020	1.8605296E+04	1.0388476E+07	558.36

Table 6.2.1-31 Reactor Cavity Volumes
(Page 1 of 2)

COMPARTMENT NUMBER	COMPARTMENT LOCATION	VOLUME (ft^3)
1	Break Location	164.595
2	Lower Reactor Cavity	12,000.
3	Reactor Vessel Annulus	1.319
4	Reactor Vessel Annulus	1.938
5	Reactor Vessel Annulus	8.601
6	Reactor Vessel Annulus	8.601
7	Reactor Vessel Annulus	9.825
8	Reactor Vessel Annulus	17.202
9	Reactor Vessel Annulus	9.825
10	Reactor Vessel Annulus	17.202
11	Reactor Vessel Annulus	9.205
12	Reactor Vessel Annulus	17.202
13	Reactor Vessel Annulus	9.206
14	Reactor Vessel Annulus	17.202
15	Reactor Vessel Annulus	9.825
16	Reactor Vessel Annulus	17.202
17	Reactor Vessel Annulus	9.825
18	Reactor Vessel Annulus	17.202
19	Reactor Vessel Annulus	9.206
20	Reactor Vessel Annulus	17.202
21	Lower Containment	60,000.
22	Lower Containment	60,000.
23	Lower Containment	60,000.
24	Lower Containment	60,000.
25	Break Location	165.206
26	Inspection Annulus	165.819
27	Inspection Annulus	165.206
28	Inspection Annulus	164.595
29	Inspection Annulus	165.206
30	Inspection Annulus	165.819
31	Inspection Annulus	165.206
32	Upper Containment	651,000.
33	Reactor Vessel Annulus	1.404
34	Reactor Vessel Annulus	1.404
35	Reactor Vessel Annulus	1.938
36	Reactor Vessel Annulus	8.601
37	Reactor Vessel Annulus	8.601
38	Reactor Vessel Annulus	17.202
39	Reactor Vessel Annulus	17.202
40	Reactor Vessel Annulus	17.202
41	Reactor Vessel Annulus	17.202
42	Reactor Vessel Annulus	17.202
43	Reactor Vessel Annulus	17.202
44	Reactor Vessel Annulus	17.202
45	Reactor Vessel Annulus	0.602
46	Reactor Vessel Annulus	0.602
47	Upper Reactor Cavity	15,500.
48	Ice Condenser	24,241.

Table 6.2.1-31 Reactor Cavity Volumes (Continued)
(Page 2 of 2)

COMPARTMENT NUMBER	COMPARTMENT LOCATION	VOLUME (ft^3)
49	Ice Condenser	28,760.
50	Ice Condenser	28,760.
51	Ice Condenser	28,760.
52	Ice Condenser	47,000.
53	Pipe Annulus	150.
54	Inspection Port	17.280
55	Inspection Port	17.280
56	Inspection Port	17.280
57	Inspection Port	17.280
58	Inspection Port	17.280
59	Inspection Port	17.280
60	Inspection Port	17.280
61	Inspection Port	17.280
62	Pipe Annulus	47.
63	Pipe Annulus	47.
64	Pipe Annulus	47.
65	Pipe Annulus	47.
66	Pipe Annulus	47.
67	Pipe Annulus	47.
68	Pipe Annulus	150.

Table 6.2.1-32 Flow Path Data (Reactor Cavity) (Page 1 of 3)

Between Compartments	k	f	Inertia Length (ft)	Hydraulic Diameter (ft)	Flow Area (ft^2)	Equiv. Length (ft)	Area Ratio a/A
1 to 3	0.4	0.02	1.6	0.3	2.7	1.2	0.28
2 to 22	2.9	0.02	28.	5.8	36.	19.	0.0
3 to 34	1.0	0.02	0.7	0.4	1.2	0.7	1.0
4 to 35	0.0	0.02	3.6	0.4	0.7	3.6	1.0
5 to 36	0.0	0.02	3.3	0.4	2.6	3.3	1.0
6 to 37	0.0	0.02	3.3	0.4	2.6	3.3	1.0
7 to 9	1.0	0.02	4.9	0.4	1.0	4.1	1.0
8 to 10	0.0	0.02	6.6	0.4	2.6	6.6	1.0
9 to 11	1.04	0.02	4.6	0.4	1.0	3.7	0.46
10 to 12	0.0	0.02	6.6	0.4	2.6	6.6	1.0
11 to 13	1.04	0.02	4.8	0.4	1.0	4.0	0.46
12 to 14	0.0	0.02	6.6	0.4	2.6	6.6	1.0
13 to 15	1.04	0.02	4.6	0.4	1.0	3.7	0.46
14 to 16	0.0	0.02	6.6	0.4	2.6	6.6	1.0
15 to 17	1.04	0.02	4.9	0.4	1.0	4.1	0.5
16 to 18	0.0	0.02	6.6	0.4	2.6	6.6	1.0
17 to 19	1.0	0.02	4.6	0.4	1.0	3.7	0.46
18 to 20	0.0	0.02	6.6	0.4	2.6	6.6	1.0
19 to 4	1.0	0.02	5.4	0.4	0.5	5.4	1.0
20 to 6	0.0	0.02	5.0	0.4	2.6	5.0	1.0
21 to 22	2.0	0.02	38.	40.	1560.	38.	0.43
22 to 23	3.0	0.02	38.	40.	1560.	38.	0.47
23 to 24	2.0	0.02	38.	40.	1560.	38.	0.43
24 to 21	3.0	0.02	32.	8.0	100.	27.	0.09
25 to 7	2.8	0.02	3.0	0.2	1.1	1.7	0.12
26 to 9	2.8	0.02	3.0	0.2	1.1	1.7	0.12
27 to 11	2.8	0.02	3.1	0.2	1.3	1.7	0.13
28 to 13	2.8	0.02	3.1	0.2	1.3	1.7	0.13
29 to 15	2.8	0.02	3.0	0.2	1.1	1.7	0.12
30 to 17	2.8	0.02	3.0	0.2	1.1	1.7	0.12
31 to 19	2.8	0.02	3.1	0.2	1.3	1.7	0.13
33 to 3	1.0	0.02	0.7	0.4	1.2	0.7	0.99
34 to 7	1.0	0.02	3.6	0.4	1.2	3.3	0.66
35 to 7	1.0	0.02	5.4	0.4	0.5	5.4	1.0
36 to 38	0.0	0.02	5.0	0.4	2.2	5.0	1.0
37 to 8	0.0	0.02	5.0	0.4	2.6	5.0	1.0
38 to 39	0.0	0.02	6.6	0.4	2.6	6.6	1.0
39 to 40	0.0	0.02	6.6	0.4	2.6	6.6	1.0
40 to 41	0.0	0.02	6.6	0.4	2.6	6.6	1.0
41 to 42	0.0	0.02	6.6	0.4	2.6	6.6	1.0
42 to 43	0.0	0.02	6.6	0.4	2.6	6.6	1.0
43 to 44	0.0	0.02	6.6	0.4	2.6	6.6	1.0
44 to 5	0.0	0.02	5.0	0.4	2.6	5.0	1.0
45 to 3	1.0	0.02	0.8	0.4	0.5	0.8	0.78
46 to 3	1.0	0.02	0.8	0.4	0.5	0.8	0.78
53 to 1	0.4	0.02	7.6	0.83	5.5	6.8	0.11
54 to 1	0.5	0.02	2.6	2.5	4.9	1.9	0.25
55 to 25	0.5	0.02	2.6	2.5	4.9	1.9	0.25
56 to 26	0.5	0.02	2.6	2.5	4.9	2.0	0.26

Table 6.2.1-32 Flow Path Data (Reactor Cavity) (Page 2 of 3)

Between Compartments	k	f	Inertia Length (ft)	Hydraulic Diameter (ft)	Flow Area (ft^2)	Equiv. Length (ft)	Area Ratio a/A
57 to 27	0.5	0.02	2.6	2.5	4.9	1.9	0.25
58 to 28	0.5	0.02	2.6	2.5	4.9	1.9	0.25
59 to 29	0.5	0.02	2.6	2.5	4.9	1.9	0.25
60 to 30	0.5	0.02	2.6	2.5	4.9	2.0	0.26
61 to 31	0.5	0.02	2.6	2.5	4.9	1.9	0.25
62 to 25	0.4	0.02	3.0	0.83	5.5	2.2	0.11
63 to 26	0.4	0.02	3.0	0.83	5.5	2.2	0.11
64 to 27	0.4	0.02	3.0	0.83	5.5	2.2	0.11
65 to 28	0.4	0.02	3.0	0.83	5.5	2.2	0.11
66 to 29	0.4	0.02	3.0	0.83	5.5	2.2	0.11
67 to 30	0.4	0.02	3.0	0.83	5.5	2.2	0.11
68 to 31	0.4	0.02	7.6	0.83	5.5	6.8	0.11
1 to 19	0.4	0.02	3.1	0.2	1.3	1.7	0.13
2 to 6	3.7	0.02	6.5	0.4	0.7	6.4	0.0
4 to 45	0.6	0.02	2.4	0.4	0.7	2.4	0.95
6 to 5	0.0	0.02	13.	0.4	0.7	13.	1.0
7 to 38	1.0	0.02	6.0	0.4	0.3	4.7	0.23
8 to 2	3.7	0.02	6.6	0.4	1.3	6.4	0.0
9 to 39	9.2	0.02	6.7	0.4	0.3	4.9	0.23
10 to 2	3.7	0.02	6.6	0.4	1.3	6.4	0.0
11 to 40	1.0	0.02	5.5	0.4	0.2	4.5	0.17
12 to 2	3.7	0.02	6.6	0.4	1.3	6.4	0.0
13 to 41	9.2	0.02	6.0	0.4	0.2	4.6	0.17
14 to 2	3.7	0.02	6.6	0.4	1.3	6.4	0.0
15 to 42	1.0	0.02	6.0	0.4	0.3	4.7	0.23
16 to 2	3.7	0.02	6.6	0.4	1.3	6.4	0.0
17 to 43	9.2	0.02	6.7	0.4	0.3	4.9	0.23
18 to 2	3.7	0.02	6.6	0.4	1.3	6.4	0.0
19 to 44	1.0	0.02	5.5	0.4	0.2	4.5	0.17
20 to 2	3.7	0.02	6.6	0.4	1.3	6.4	0.0
21 to 48	.7837	0.0	10.36	1.0	265.875	0.0	0.096
22 to 48	.7837	0.0	10.36	1.0	265.875	0.0	0.096
23 to 48	.7837	0.0	10.36	1.0	265.875	0.0	0.096
24 to 48	.7837	0.0	10.36	1.0	265.875	0.0	0.096
25 to 3	0.4	0.02	1.6	0.3	2.7	1.2	0.28
26 to 7	0.4	0.02	3.0	0.2	1.1	1.7	0.12
27 to 9	0.4	0.02	3.0	0.2	1.1	1.7	0.12
28 to 11	0.4	0.02	3.1	0.2	1.3	1.7	0.13
29 to 13	0.4	0.02	3.1	0.2	1.3	1.7	0.13
30 to 15	0.4	0.02	3.0	0.2	1.1	1.7	0.12
31 to 17	0.4	0.02	3.0	0.2	1.1	1.7	0.12
33 to 46	2.2	0.02	3.3	0.4	0.4	3.3	0.25
34 to 46	2.2	0.02	3.3	0.4	0.4	3.3	0.25
35 to 47	1.1	0.02	3.0	0.4	0.7	1.5	0.0
37 to 36	0.0	0.02	13.	0.4	0.7	13.	1.0
38 to 8	0.0	0.02	13.	0.4	1.3	13.	1.0
39 to 10	0.0	0.02	13.	0.4	1.3	13.	1.0

Table 6.2.1-32 Flow Path Data (Reactor Cavity) (Page 3 of 3)

Between Compartments	k	f	Inertia Length (ft)	Hydraulic Diameter (ft)	Flow Area (ft^2)	Equiv. Length (ft)	Area Ratio a/A
40 to 12	0.0	0.02	13.	0.4	1.3	13.	1.0
41 to 14	0.0	0.02	13.	0.4	1.3	13.	1.0
42 to 16	0.0	0.02	13.	0.4	1.3	13.	1.0
43 to 18	0.0	0.02	13.	0.4	1.3	13.	1.0
44 to 20	0.0	0.02	13.	0.4	1.3	13.	1.0
45 to 33	0.0	0.02	3.3	0.4	0.4	3.3	0.25
48 to 49	0.0	0.1055	8.733	0.855	989.01	8.0	0.230
49 to 50	0.0	0.0592	12.278	0.855	982.47	16.0	0.239
50 to 51	0.0	0.0592	12.278	0.855	982.47	16.0	0.359
51 to 52	0.87979	0.1249	8.8558	0.855	982.47	8.0	0.359
52 to 32	1.43	0.0	2.8	1.0	2003.1		0.269
53 to 25	0.4	0.02	7.6	0.83	5.5	6.8	0.11
54 to 47	1.0	0.02	1.9	2.5	4.9	1.8	0.0
55 to 47	1.0	0.02	1.9	2.5	4.9	1.8	0.0
56 to 47	1.0	0.02	1.9	2.5	4.9	1.8	0.0
57 to 47	1.0	0.02	1.9	2.5	4.9	1.8	0.0
58 to 47	1.0	0.02	1.9	2.5	4.9	1.8	0.0
59 to 47	1.0	0.02	1.9	2.5	4.9	1.8	0.0
60 to 47	1.0	0.02	1.9	2.5	4.9	1.8	0.0
61 to 47	1.0	0.02	1.9	2.5	4.9	1.8	0.0
62 to 26	0.4	0.02	3.0	0.83	5.5	2.2	0.11
63 to 27	0.4	0.02	3.0	0.83	5.5	2.2	0.11
64 to 28	0.4	0.02	3.0	0.83	5.5	2.2	0.11
65 to 29	0.4	0.02	3.0	0.83	5.5	2.2	0.11
66 to 30	0.4	0.02	3.0	0.83	5.5	2.2	0.11
67 to 31	0.4	0.02	3.0	0.83	5.5	2.2	0.11
68 to 1	0.4	0.02	7.6	0.83	5.5	8.8	0.11
1 to 25	1.0	0.02	5.4	1.5	9.6	2.6	0.47
2 to 37	3.7	0.02	6.5	0.4	0.7	6.4	0.0
4 to 47	1.1	0.02	3.0	0.4	0.7	1.5	1.0
5 to 46	9.2	0.02	7.8	2.0	0.5	18.	1.0
7 to 47	1.1	0.02	3.0	0.4	1.4	2.9	0.0
9 to 47	1.1	0.02	3.0	0.4	1.4	2.9	0.0
11 to 47	1.1	0.02	3.0	0.4	1.4	2.9	0.0
13 to 47	1.1	0.02	3.0	0.4	1.4	2.9	0.0
15 to 47	1.1	0.02	3.0	0.4	1.4	2.9	0.0
17 to 47	1.1	0.02	3.0	0.4	1.4	2.9	0.0
19 to 47	1.1	0.02	3.0	0.4	1.4	2.9	0.0
21 to 47	3.8	0.02	5.8	5.1	26.	4.0	0.04
22 to 47	3.8	0.02	9.1	12.	74.	4.2	0.10
23 to 47	3.8	0.02	8.3	11.	62.	4.0	0.08
24 to 47	3.9	0.02	6.3	5.5	32.	4.0	0.04
25 to 26	1.0	0.02	5.3	1.4	9.1	2.3	0.44
26 to 27	1.0	0.02	5.3	1.4	9.1	2.6	0.44
27 to 28	1.0	0.02	5.4	1.5	9.6	2.6	0.47
28 to 29	1.0	0.02	5.4	1.5	9.6	2.6	0.47
29 to 30	1.0	0.02	5.3	1.4	9.1	2.6	0.44
30 to 31	1.0	0.02	5.3	1.4	9.1	2.6	0.44
31 to 1	1.0	0.02	5.4	1.5	9.6	2.6	0.47
33 to 19	1.0	0.02	3.6	0.4	1.2	3.3	0.61
35 to 46	0.6	0.02	2.4	0.4	0.7	2.4	0.95
36 to 46	9.2	0.02	7.8	2.0	0.5	18.	0.95
45 to 34	0.0	0.02	3.3	0.4	0.4	3.3	0.25
53 to 21	1.0	0.02	7.2	17.	11.0	8.8	0.0
62 to 21	1.0	0.02	2.5	1.5	11.0	2.1	0.0
63 to 22	1.0	0.02	2.5	1.5	11.0	2.1	0.0
64 to 22	1.0	0.02	2.5	1.7	11.0	2.1	0.0
65 to 23	1.0	0.02	2.5	1.7	11.0	2.1	0.0
66 to 23	1.0	0.02	2.5	1.5	11.0	2.1	0.0
67 to 24	1.0	0.02	2.5	1.5	11.0	2.1	0.0
68 to 24	1.0	0.02	7.2	1.7	11.0	6.8	0.0

Table 6.2.1-33 Containment Data (Eccs Analysis)
(Page 1 of 2)

I. Conservatively High Estimate of Containment Net Free Volume	
Containment Area	**Volume (ft^3)**
Upper Compartment	651,000
Lower Compartment	271,400
Ice Condenser	169,400
Dead-Ended Compartments (includes all accumulator rooms, both fan compartments, instrument room pipe tunnel)	129,900
II. Initial Conditions	
A. Containment Pressure	15.0 psia
B. Lowest Operational Containment Temperature for the Upper, Lower, and Dead-Ended Compartments	85°F 100°F
C. Highest Refueling Water Storage Tank Temperature	100°F
D. Lowest Temperature Outside Containment	5°F
E. Highest Initial Spray Temperature	100°F
F. Lowest Annulus Temperature	40°F
III. Structural Heat Sinks**	
A. For Each Surface	
1. Description of Surface	
2. Conservatively High Estimate of Area Exposed to Containment Atmosphere	See Tables 6.2.1-34 through 6.2.1-36
3. Location in Containment by Compartment	
B. For Each Separate Layer of Each Surface	
1. Material	
2. Conservatively Large Estimate of Layer Thickness	See Tables 6.2.1-34 through 6.2.1-36
3. Conservatively High Value of Material Conductivity	See Tables 6.2.1-34 through 6.2.1-36
4. Conservatively High Value of Volumetric Heat Capacity	See Tables 6.2.1-34 through 6.2.1-36

Table 6.2.1-33 Containment Data (Eccs Analysis) (Continued)
(Page 2 of 2)

IV. Spray System	
A. Runout Flow for a Spray Pump*** (Containment Spray)	7700 gpm
B. Number of Spray Pumps Operating with No Diesel Failure	2/Unit
C. Number of Spray Pumps Operating with One Diesel Failure	1/Unit
D. Assumed Post Accident Initiation of Spray System	25 sec
V. Deck Fan	
A. Fastest Post Accident Initiation of Deck Fans	10 min
B. Conservatively High Flow Rate Per Fan	42,000 cfm
VI. Conservatively Low Hydrogen Skimmer System100 cfm/each Flow Rate	

** Structural heat sinks should also account for any surfaces neglected in containment integrity analysis.

*** Runout flow is for a break immediately downstream of the pump. In that event, the spray water will not enter the containment.

Table 6.2.1-34 Major Characteristics Of Structural Heat Sinks Inside Sequoyah Nuclear Plant Containment - Upper Compartment

Structure	Heat Transfer Area (ft^2)	Thickness and Material (as noted)	Thermal Conductivity (Btu/ft-hr-°F)	Volume Heat Capacity (Btu/ft^3-°F)
Operating Deck	4,452	1.1 ft concrete	0.84	30.24
	7,749	6.3 mils coating 1.1 ft concrete	0.087 0.84	29.8 30.24
	672	1.6 ft concrete	0.84	30.24
	11,445	6.3 mils coating 1.6 ft concrete	0.087 0.84	 30.24
	4,032	0.26 in. stainless steel 1.6 ft concrete	9.87 0.84	59.22 30.24
	798	15.7 mils coating 1.6 ft concrete	0.087 0.84	29.8 30.24
Containment Shell	22,890	7.8 mils coating 0.46 in. carbon steel	0.21 27.3	29.8 30.24
	18,375	7.8 mils coating 0.58 in. carbon steel	0.21 27.3	29.8 59.22
	2,100	7.8 mils coating 1.51 in. carbon steel	0.21 27.3	29.8 59.22
Miscellaneous Steel	4,095	7.8 mils coating 0.26 in. carbon steel	0.21 27.3	29.8 59.22
	3,559	7.8 mils coating	0.21 27.3	29.8 59.22
	3,539	7.8 mils coating 0.72 in. carbon steel	0.21 27.3	29.8 59.22
	273	7.8 mils coating 1.57 in. carbon steel	0.21 27.3	29.8 59.2

Table 6.2.1-35 Major Characteristics Of Structural Heat Sinks Inside Sequoyah Nuclear Plant Containment - Upper Compartment (Page 1 of 2)

Structure	Heat Transfer Area (ft^2)	Thickness and Material (as noted)	Thermal Conductivity (Btu/ft-hr-°F)	Volume Heat Capacity (Btu/ft^3-°F)
Operating Deck	4,452	1.1 ft concrete	0.84	30.24
	7,749	6.3 mils coating 1.1 ft concrete	0.087 0.84	29.8 30.24
	672	1.6 ft concrete	0.84	30.24
	11,445	6.3 mils coating 1.6 ft concrete	0.087 0.84	 30.24
	4,032	0.26 in. stainless steel 1.6 ft concrete	9.87 0.84	59.22 30.24
	798	15.7 mils coating 1.6 ft concrete	0.087 0.84	29.8 30.24
Containment Shell	22,890	7.8 mils coating 0.46 in. carbon steel	0.21 27.3	29.8 30.24
	18,375	7.8 mils coating 0.58 in. carbon steel	0.21 27.3	29.8 59.22
	2,100	7.8 mils coating 1.51 in. carbon steel	0.21 27.3	29.8 59.22
Miscellaneous Steel	4,095	7.8 mils coating 0.26 in. carbon steel	0.21 27.3	29.8 59.22
	3,559	7.8 mils coating	0.21 27.3	29.8 59.22
	3,539	7.8 mils coating 0.72 in. carbon steel	0.21 27.3	29.8 59.22
	273	7.8 mils coating 1.57 in. carbon steel	0.21 27.3	29.8 59.2
Operating Deck	7,507	1.1 ft concrete	0.84	30.24
	2,971	1.6 mils coating 1.1 ft concrete	0.087 0.84	29.8 30.24
	2,131	1.6 ft concrete	0.84	30.24
	789	6.3 mils coating 1.84 ft concrete	0.087 0.84	29.8 30.24
	2,646	2.1 ft concrete	0.84	30.24
	210	6.3 mils coating 2.1 ft concrete	0.087 0.84	29.8 30.24

Table 6.2.1-35 Major Characteristics Of Structural Heat Sinks Inside Sequoyah Nuclear Plant Containment - Upper Compartment (Continued) (Page 2 of 2)

Structure	Heat Transfer Area (ft^2)	Thickness and Material (as noted)	Thermal Conductivity (Btu/ft-hr-°F)	Volume Heat Capacity (Btu/ft^3-°F)
Crane Wall	14,752	1.6 ft concrete	0.84	30.24
	3,570	6.3 mils coating 1.6 ft concrete	0.087 0.84	29.8 30.24
Containment Floor	567	1.6 ft concrete	0.84	30.24
	7,612	6.3 mils coating 1.6 ft concrete	0.087 0.84	29.8 30.24
Interior Concrete	3,780	1.1 ft concrete	0.84	30.24
	567	1.1 ft concrete	0.84	30.24
	2,992	2.1 ft concrete	0.84	30.24
	2,384	0.26 in. stainless steel 2.1 ft concrete	9.8 0.84	59.2 30.24
	2,373	2.1 ft concrete	0.84	30.24
	1,480	6.3 mils coating 2.1 ft concrete	0.087 0.84	29.8 30.24
Miscellaneous Steel	12,915	7.8 mils coating 0.53 in. carbon steel	0.22 27.3	14.7 59.2
	7,560	7.8 mils coating 0.78 in. carbon steel	0.22 27.3	14.7 59.2
	5,250	7.8 mils coating 1.1 carbon steel	0.22 27.3	14.7 59.2
	2,625	7.8 mils coating 1.45 in. carbon steel	0.22 27.3	14.7 59.2
	1,575	7.8 mils coating 1.7 in. carbon steel	0.22 27.3	14.7 59.2

Table 6.2.1-36 Major Characteristics Of Structural Heat Sinks Inside Sequoyah Nuclear Plant Containment - Lower Compartment

Structure	Heat Transfer Area (ft^2)	Thickness and Material (as noted)	Thermal Conductivity (Btu/ft-hr-°F)	Volume Heat Capacity (Btu/ft^3-°F)
Containment Shell	3,045	7.8 mils coating 0.78 in. carbon steel	0.22 27.3	14.7 59.2
	4,305	7.8 mils coating 1.1 in. carbon steel	0.22 27.3	14.7 59.2
	4,305	7.8 mils coating 1.25 in. carbon steel	0.22 27.3	14.7 59.2
	3,780	7.8 mils coating 1.37 in. carbon steel	0.22 27.3	14.7 59.2
	4,305	7.8 mils coating 1.51 in. carbon steel	0.22 27.3	14.7 59.2
Crane Wall	7,255	1.6 ft concrete	0.84	30.24
	3,801	6.3 mils coating 1.58 ft concrete	0.87 0.84	14.7 30.24
Containment Floor	4,809	6.3 mils coating 2.1 ft concrete	0.087 0.84	14.7 30.24
Interior Concrete	9,870	1.1 ft concrete	0.84	30.24
	3,948	6.3 mils coating 1.1 ft concrete	0.087 0.84	14.7 30.24
	5,376	1.58 ft concrete	0.84	30.24

Table 6.2.1-37 Maximum Reverse Pressure Differential Pressure Analysis Base Case

	Westinghouse ECCS structural heat transfer model Sprays at runout flow	
	Offsite power available spray start time	
	Minimum containment temperature	
	Dead-ended volume is swept	
	Max. reverse differential pressure = 0.65 psi	
Case	**Variable**	**Change in Max. dP (psi)**
1	Ice condenser flow through the drains acts as 50% thermal efficient spray	+0.2
2	Same as Case 1, except 100% thermal efficiency	+0.4
3	Maximum containment temperature	-0.2
4	Heat transfer coefficient to sump equals 5 times H_{max}	<0.1
5	Same as Case 2, except drain flow rate times 1.5	+0.6
6	Combination of Cases 2 and 4	+0.4
7	1 bay of ice condenser doors remains open	-0.65
8	Same as Case 6 except Equation (3) written as $H = H_{stag} + [H_{max} - H_{stag}]\, e^{-.025\,[t-tp]}$	+0.55
9	Same as Case 6 except 5 times upper to lower resistance	+2.0
10	RWST temperature = 105°F	+0.2

Table 6.2.1-38 Ice Condenser Steam Exit Flow vs. Time vs. Sump Temperature

(Page 1 of 3)

Time (sec)	Sump Temp. (°F)	Ice Condenser Steam Exit Flow (lb/sec)
13.1	190.3	-1.74
13.8	190.6	-1.63
14.4	190.7	-1.76
15.0	190.9	-1.54
15.4	191.1	-1.37
15.9	191.2	-1.23
16.3	191.3	-.13
16.6	191.4	-.09
17.0	191.5	-.09
17.4	191.6	-.08
17.8	191.7	-.08
18.2	191.8	-.07
18.6	191.9	-.07
19.0	192.0	-.07
19.3	192.1	-.07
19.7	192.2	-.06
20.0	192.3	-1.04
20.3	192.4	-.93
20.9	192.5	-1.17
21.5	192.7	-1.43
21.8	192.8	-2.24
22.4	192.9	-2.95
23.0	193.1	-2.85
23.6	193.2	-2.64
23.9	193.3	-2.53
24.5	193.4	-2.34
25.1	193.8	-2.17
25.4	194.0	-2.05
25.7	194.1	-1.94

Table 6.2.1-38 Ice Condenser Steam Exit Flow vs. Time vs. Sump Temperature (Continued) (Page 2 of 3)

Time (sec)	Sump Temp. (°F)	Ice Condenser Steam Exit Flow (lb/sec)
26.0	194.2	-1.85
26.6	194.6	-1.69
27.2	194.8	-1.58
27.5	194.9	-1.53
28.0	195.2	-1.45
29.5	195.6	-1.40
30.1	195.8	-1.42
30.7	196.0	-1.44
31.3	196.2	-1.45
31.9	196.3	-1.45
32.5	196.4	-1.43
33.1	196.5	-1.40
33.7	196.6	-1.36
34.3	196.8	-1.31
34.9	196.9	-1.26
35.5	196.9	-1.20
36.0	197.0	-1.115
36.9	197.2	-0.96
37.9	197.3	-0.80
38.9	197.4	-0.63
40.1	197.4	-0.44
41.3	197.5	-0.29
42.2	197.5	-0.20
44.0	197.4	-.09
44.9	197.3	-0.4
45.4	197.3	.12
46.7	197.2	.19
47.6	197.0	.20
48.9	196.9	.19

Table 6.2.1-38 Ice Condenser Steam Exit Flow vs. Time vs. Sump Temperature (Continued) (Page 3 of 3)

Time (sec)	Sump Temp. (°F)	Ice Condenser Steam Exit Flow (lb/sec)
49.8	196.7	.17
51.2	196.5	.12
52.3	196.4	.07
53.6	196.1	.01
54.4	196.0	-.01
55.2	195.9	-.03
56.2	195.7	-.05
57.1	195.5	-.07
58.0	195.4	-.10
59.0	195.2	-.17
59.9	195.0	-.14
60.9	194.9	-.15
61.6	194.7	-.17
62.8	194.5	-.18
63.7	194.3	-.20
64.7	194.2	-.22
65.6	194.0	-.24
66.6	193.8	-.31
67.5	193.6	-.41
68.4	193.5	-.60
69.4	193.3	.20
70.3	193.2	.63
71.3	193.0	.84
72.2	192.9	1.05
73.2	192.7	1.25
74.1	192.6	1.39
75.1	192.5	1.54
76.0	192.4	1.66
77.0	192.3	1.78

Table 6.2.1-39

NO WORD FILE FOR THIS TABLE

Table 6.2.1-40 Steam Line Break Cases For Core Integrity

Case	Type of Break	Boric Acid Concentration (ppm)
1	Hypothetical with offsite power, downstream of the flow restrictor	0
2	Hypothetical without offsite power, downstream of the flow restrictor	0
3	Credible - Uniform	0
4	Credible - Nonuniform	0

Table 6.2.1-41 Line Break(1) Descriptions For Mass And Energy Releases

102% Power -	AFW Pump Runout Protection Failure
102% Power -	Feed Control Valve (FCV) Failure
102% Power -	No Failure
102% Power -	Feedwater Isolation Valve (FWIV) Failure
0% Power -	AFW Pump Runout Protection Failure
0% Power -	Feed Control Valve (FCV) Failure
0% Power -	No Failure
0% Power -	Feedwater Isolation Valve (FWIV) Failure

Notes:

(1) For 1.4 ft^2 break

Table 6.2.1-42 Small Break Descriptions For Mass And Energy

Break Size (ft^2)	Description
0.944	30% Power - AFW Pump Runout Protection Failure
0.6	30% Power - AFW Pump Runout Protection Failure
0.35	30% Power - AFW Pump Runout Protection Failure
0.1	30% Power - AFW Pump Runout Protection Failure
0.86	102% Power - AFW Pump Runout Protection Failure

Table 6.2.1-43 Large Break Analysis - Associated Times

WBNP-69 Table 6.2.1-43

Case	Maximum Lower Compartment Temperature (°F)	Time, Tmax (sec)
1.4 ft^2, 102% Power - AFW Pump Runout Protection Failure	289.484	3.11
1.4 ft^2, 102% Power - FCV Failure	289.483	3.11
1.4 ft^2, 102% Power - FWIV Failure	289.483	3.11
1.4 ft^2, 102% Power - MSIV Failure	286.96	3.31
1.4 ft^2, 0% Power - AFW Pump Runout Protection Failure	287.37	3.16
1.4 ft^2, 0% Power - FCV Failure	287.30	3.21
1.4 ft^2, 0% Power - FWIV Failure	287.28	3.21
1.4 ft^2, 0% Power - MSIV Failure	288.28	2.51

Table 6.2.1-44 Small Break Analysis - Small Split - Associated Times

Case[1] (ft^2)	Maximum Lower Compartment Temperature (°F)	Time, Tmax (sec)
0.86	325.34	83.28
0.944	325.12	80.46
0.6	325.37	134.12
0.35	324.86	262.92
0.1	317.74	646.77

1 All with AFW pump runout protection failure and 30% power, except that 0.86 ft^2 break is at 102% power.

THIS PAGE INTENTIONALLY BLANK

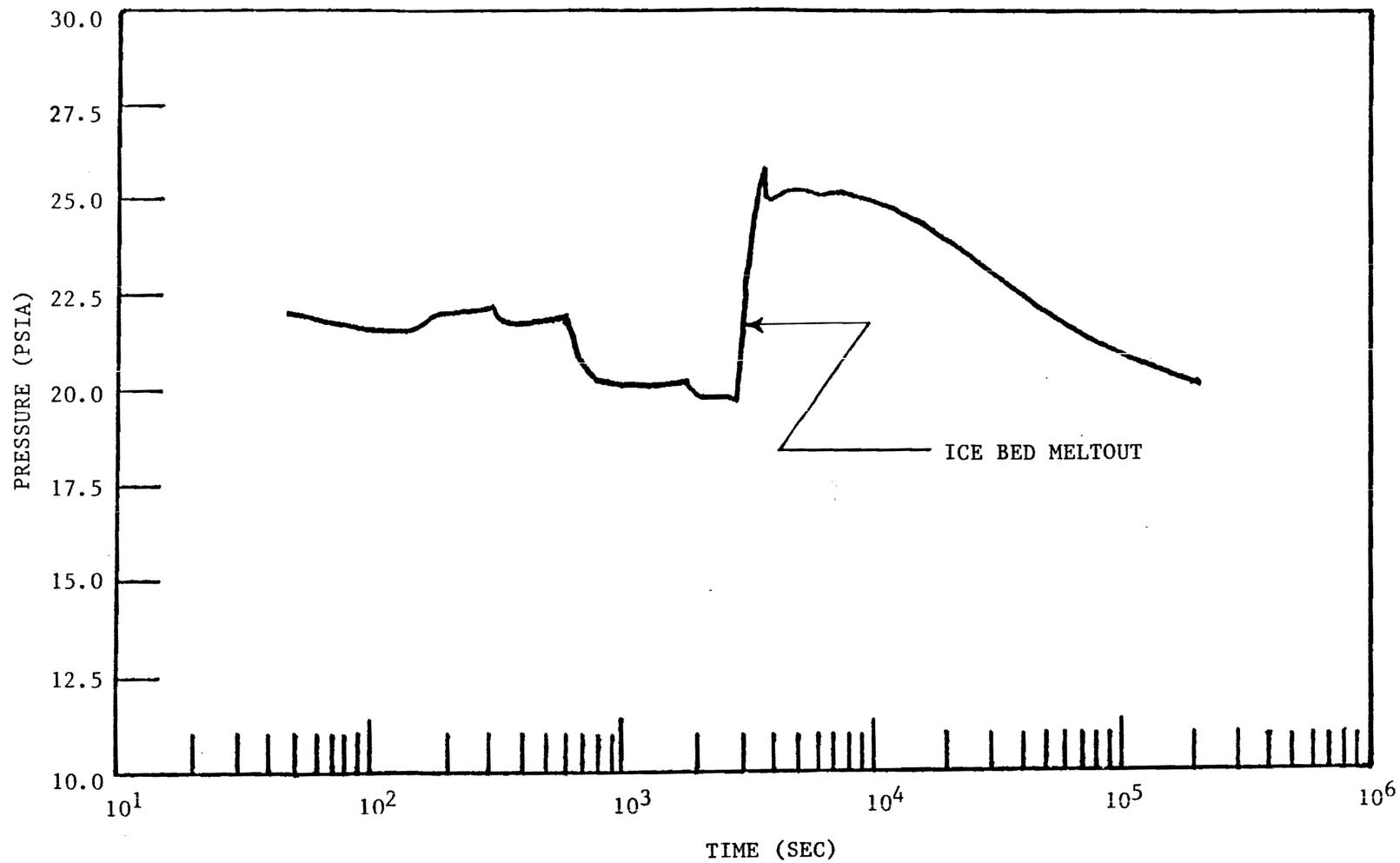

Figure 6.2.1-1 Pressure vs. Time

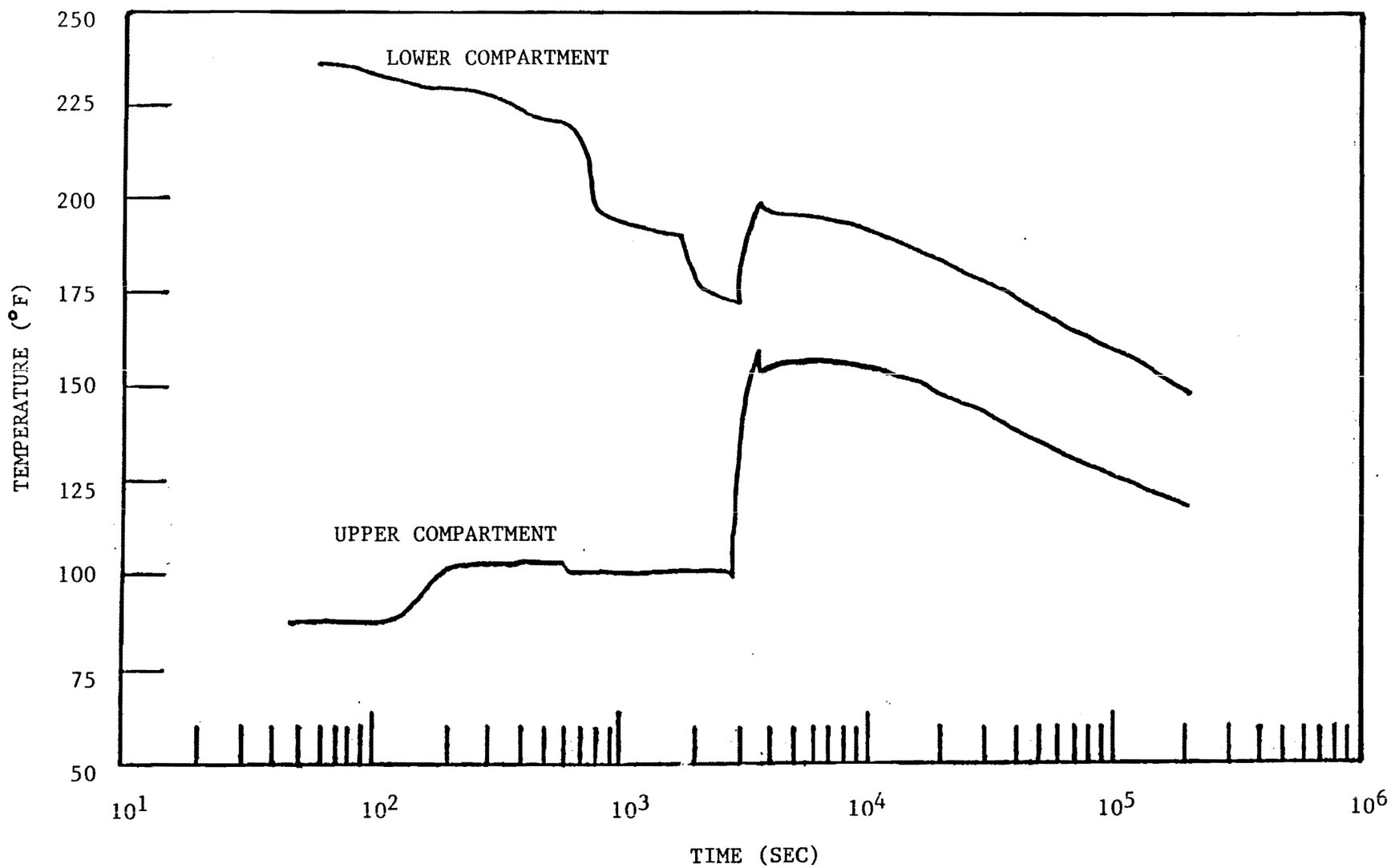

Figure 6.2.1-2 Temperature VS. Time

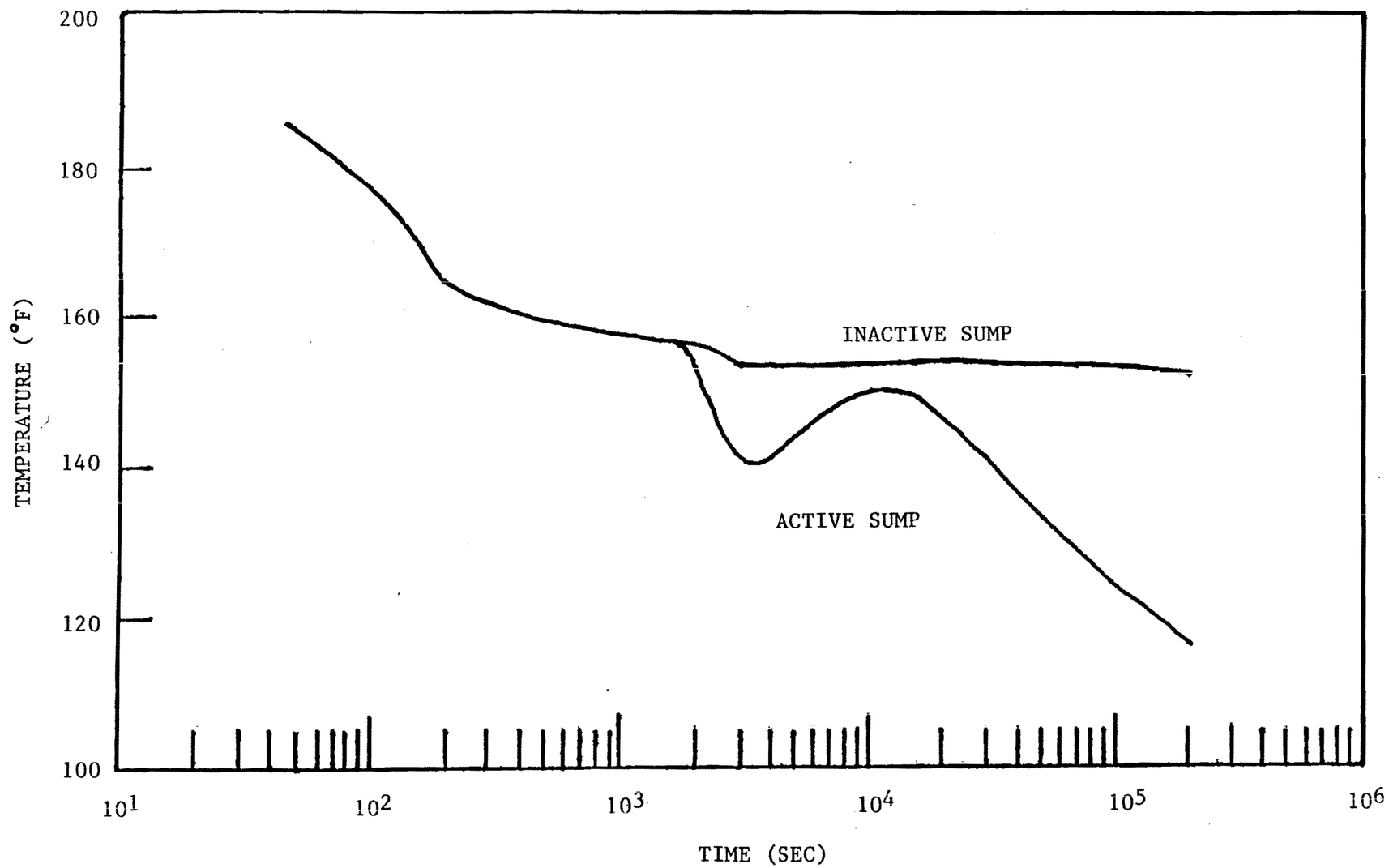

Figure 6.2.1-3 Active and Inactive Sump Temperature Transients

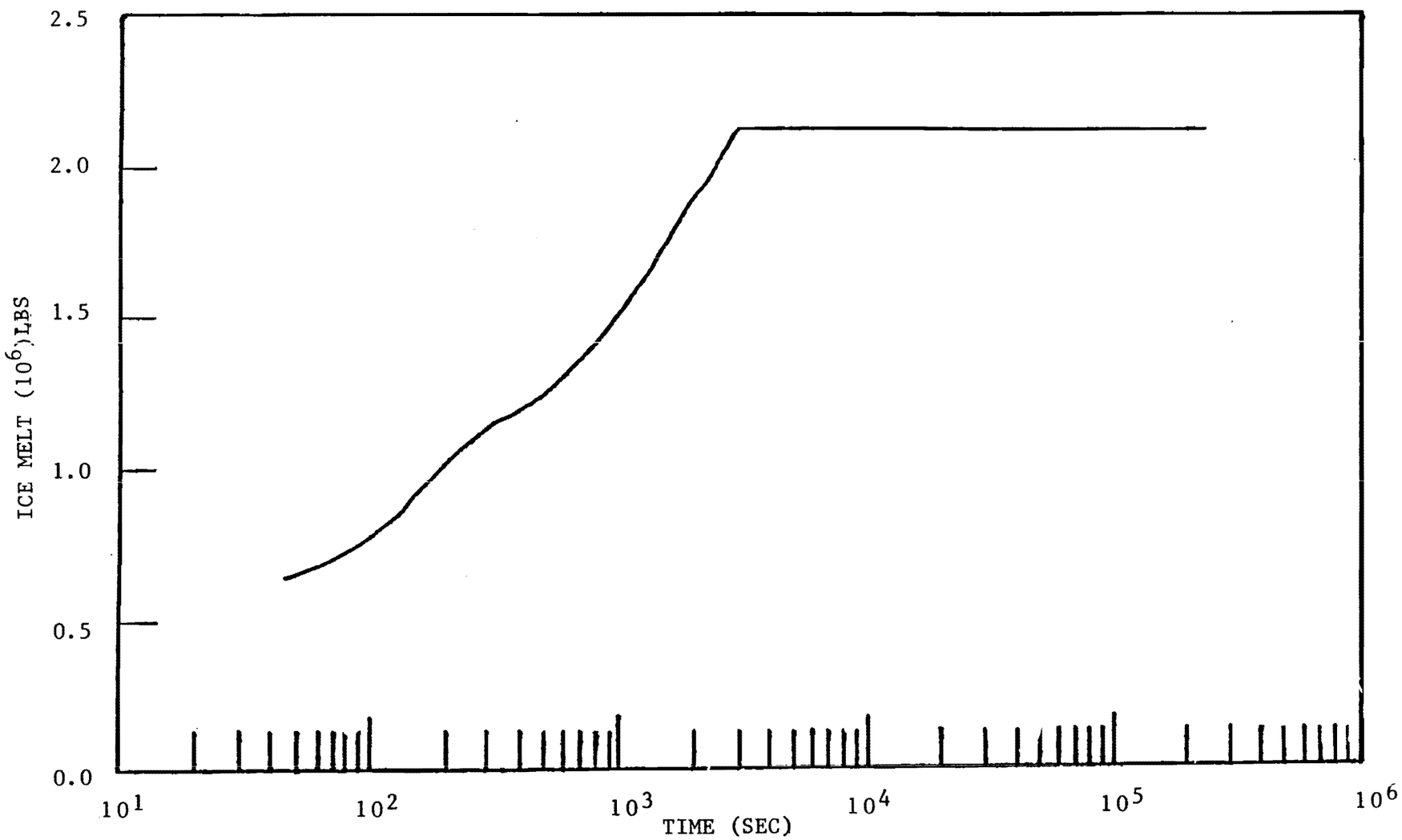

Figure 6.2.1-4 Ice Melt Transient

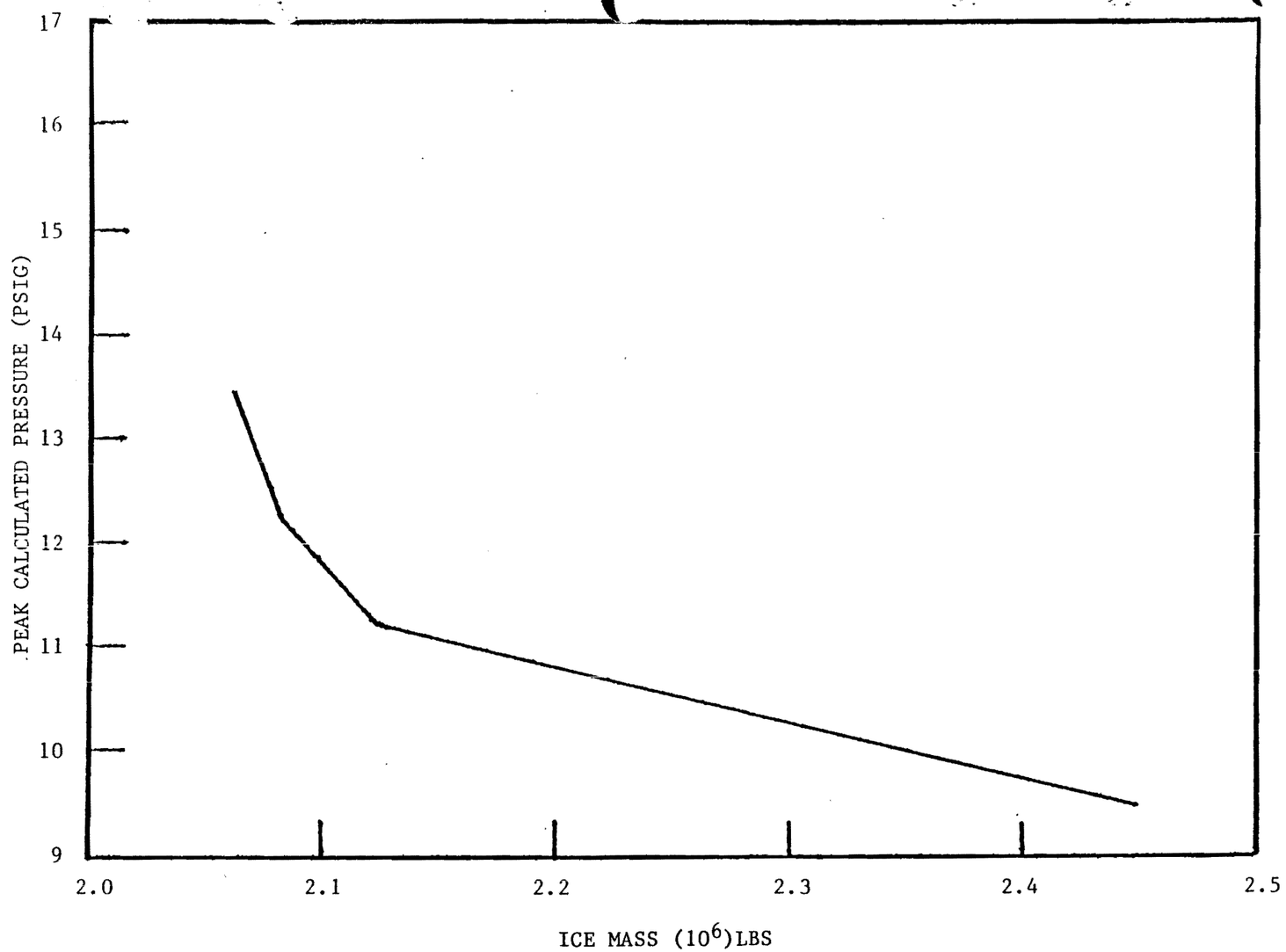

Figure 6.2.1-4a Ice Mass vs. Pressure

6370-i

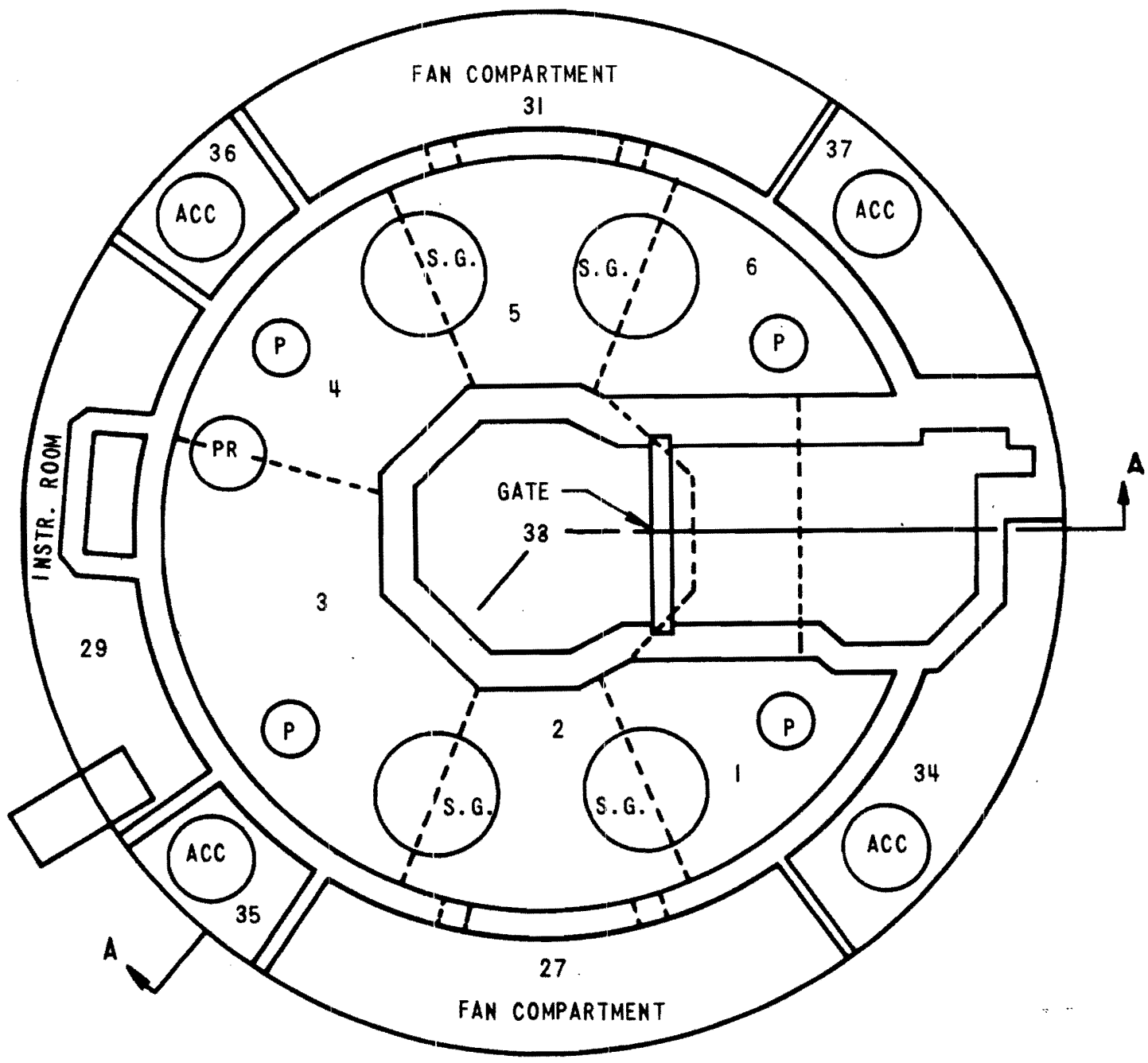

Figure 6.2.1-5 Plan at Equiment Rooms Elevation

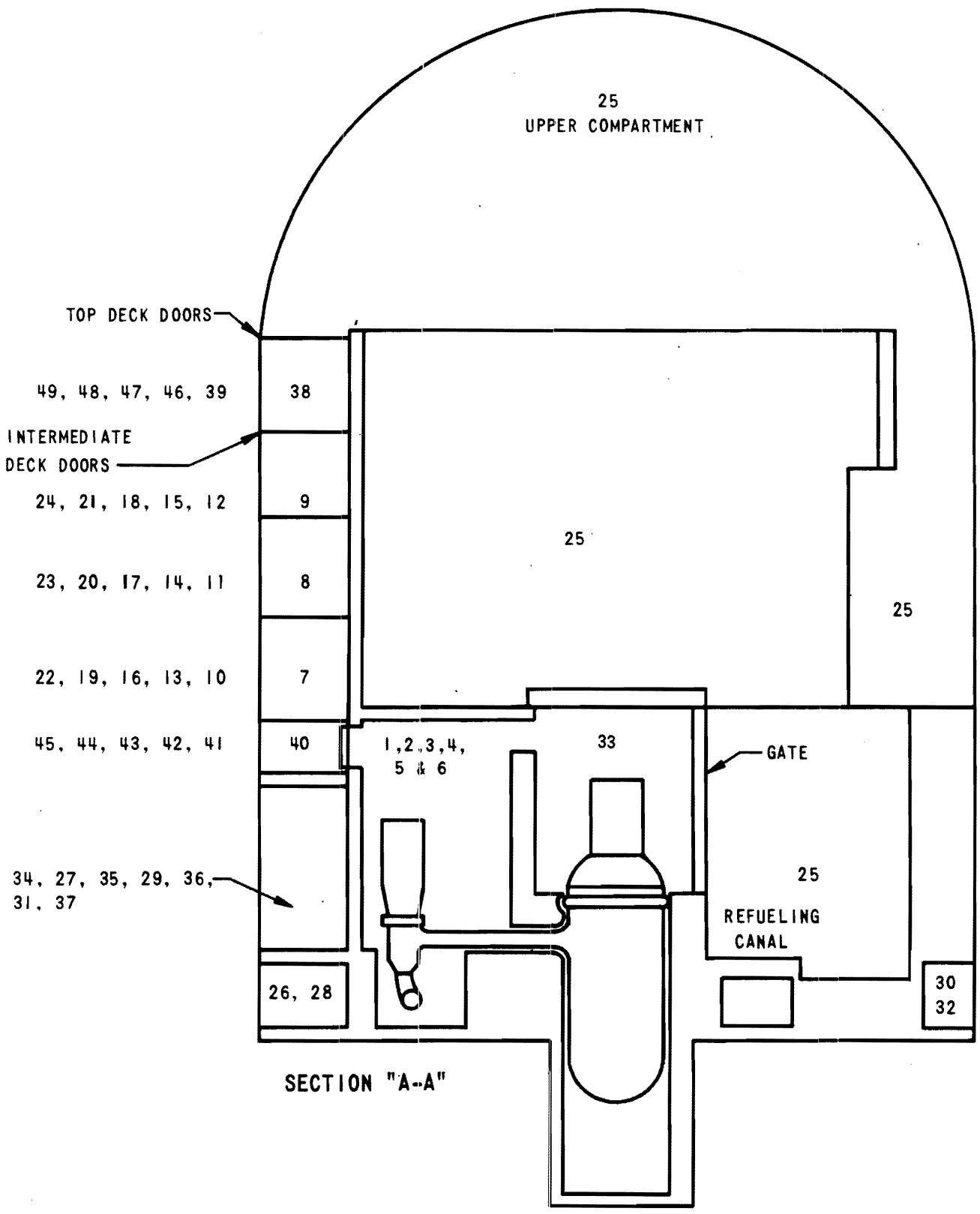

Figure 6.2.1-6 Containment Section View

6370-3

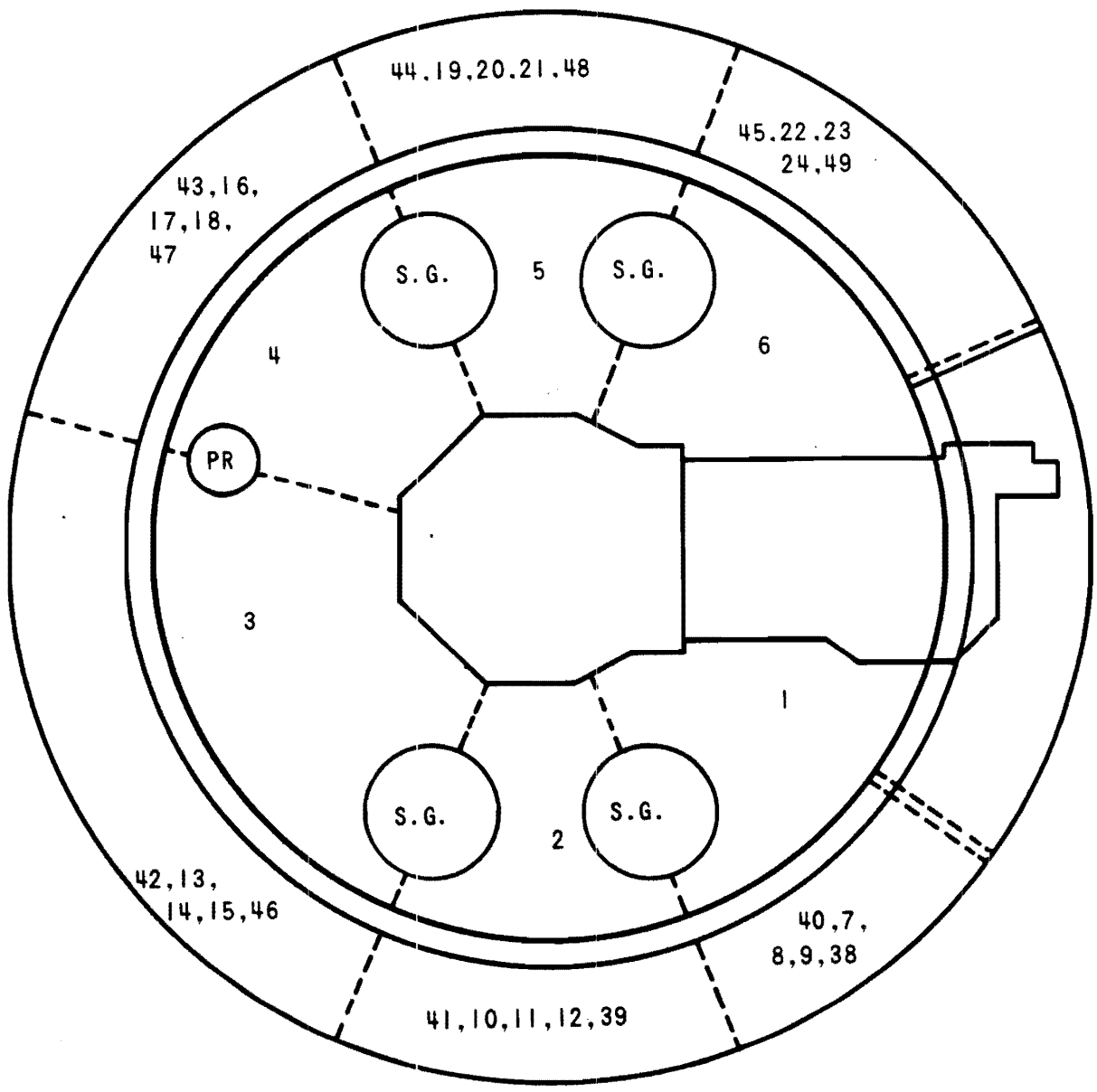

Figure 6.2.1-7 Plan View at Ice Condenser Elevation Ice Condenser Compartments

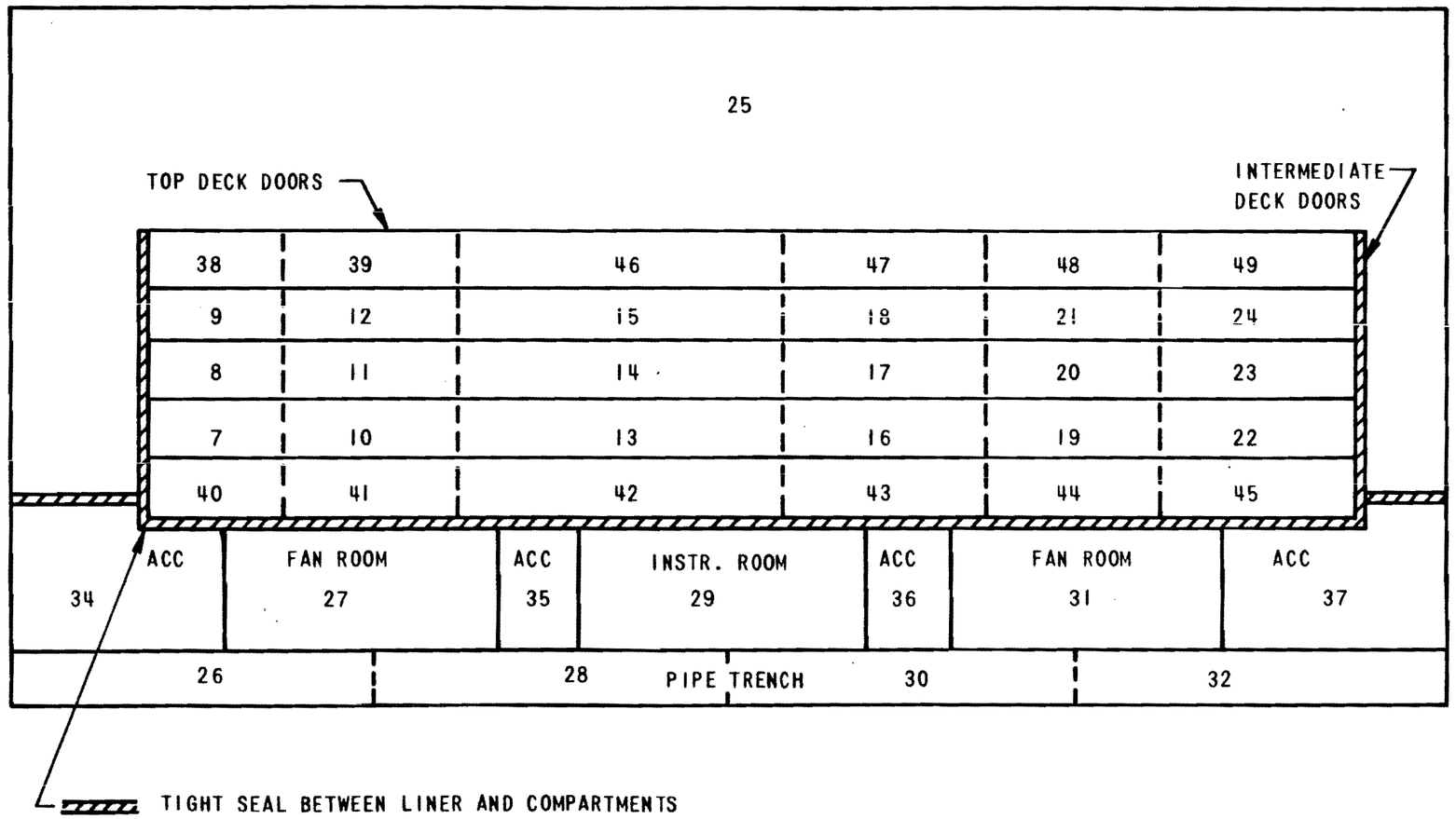

Figure 6.2.1-8 Layout of Containment Shell

6370-4

Figure 6.2.1-8 Layout of Containment Shell

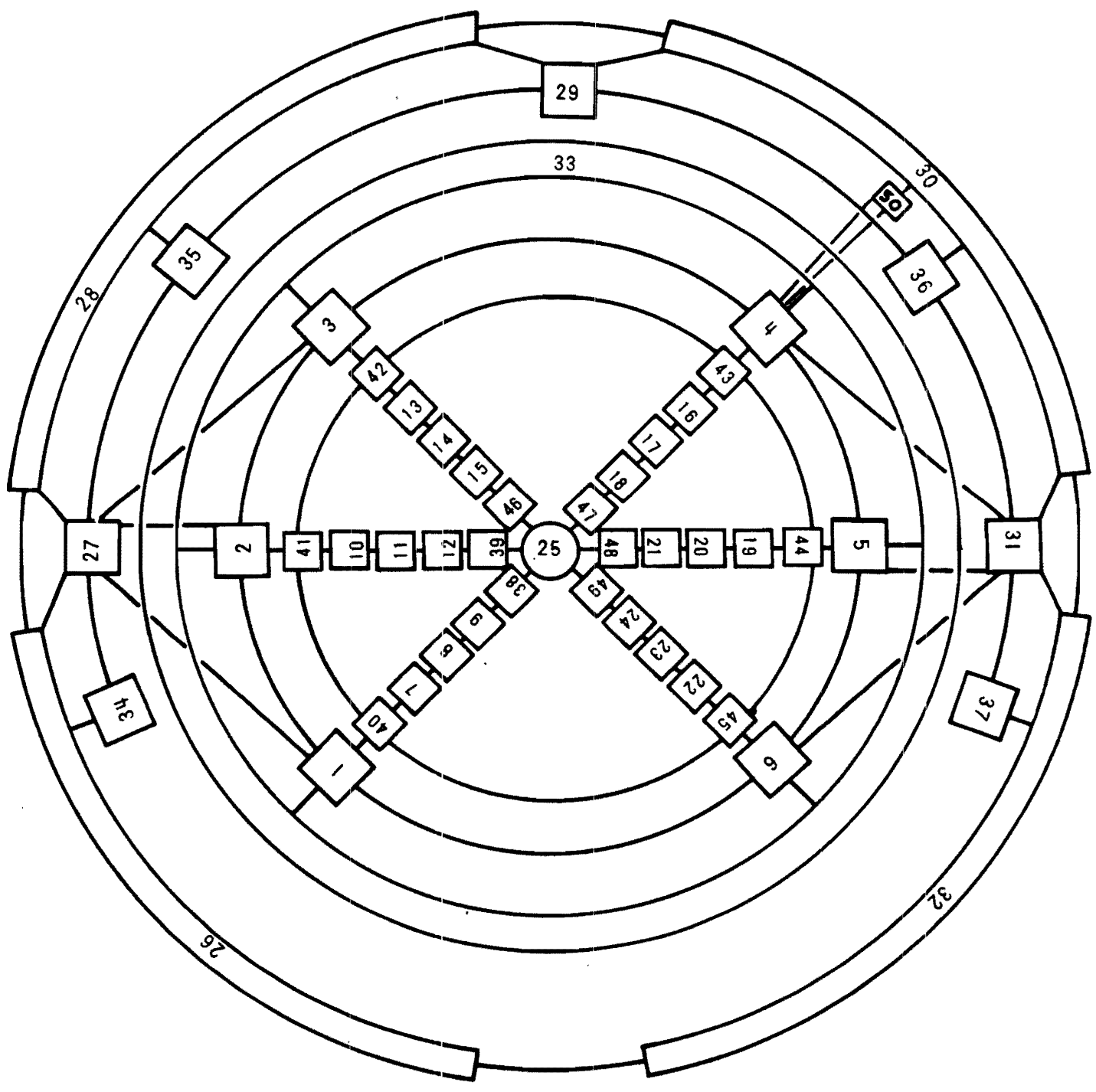

Figure 6.2.1-9 TMD Code Network

10.103-12

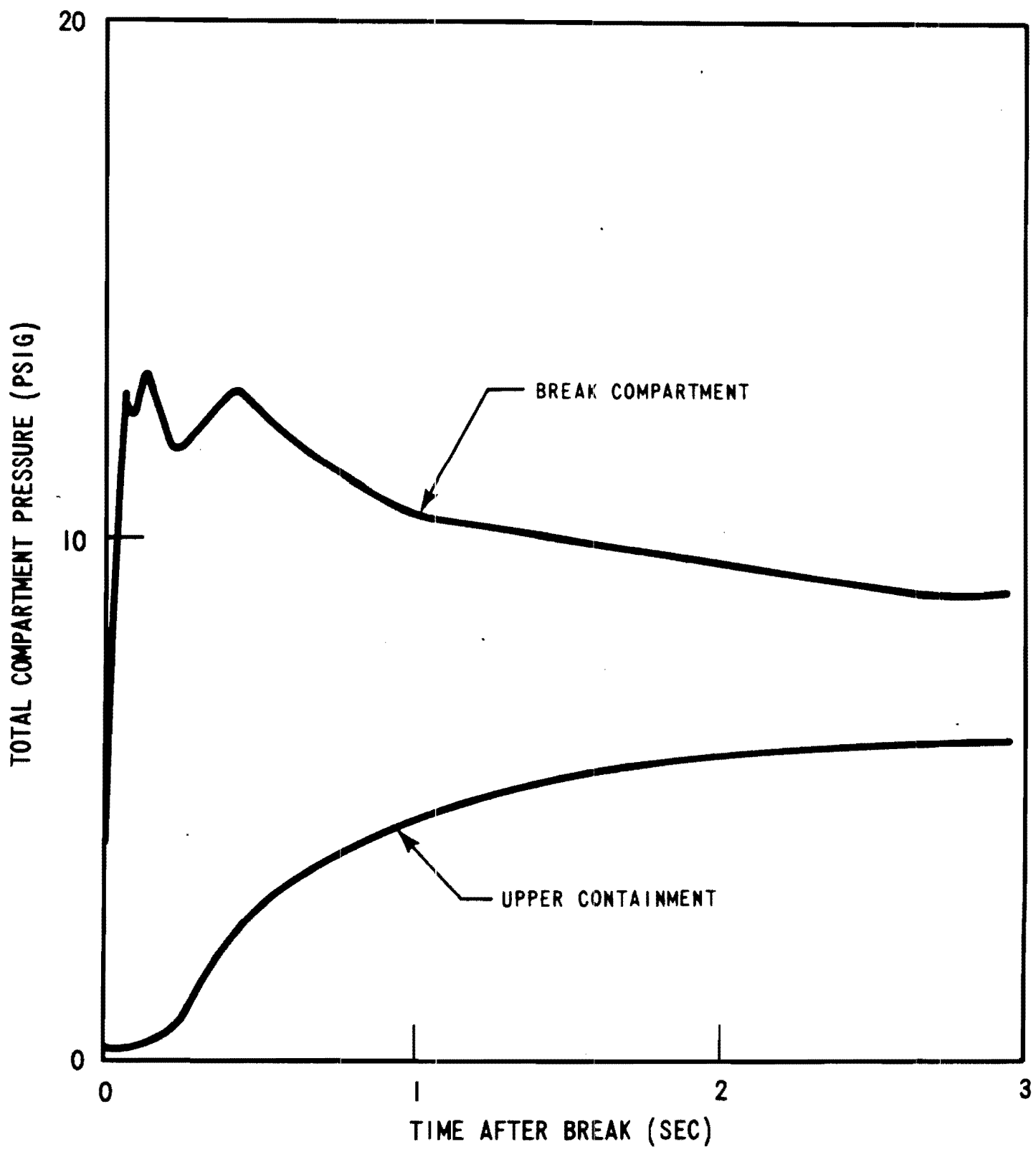

Figure 6.2.1-10 Upper and Lower Compartment Pressure Transient for Worst Case Break Compartment (Element 1) Having a DEHL Break

10.103-13

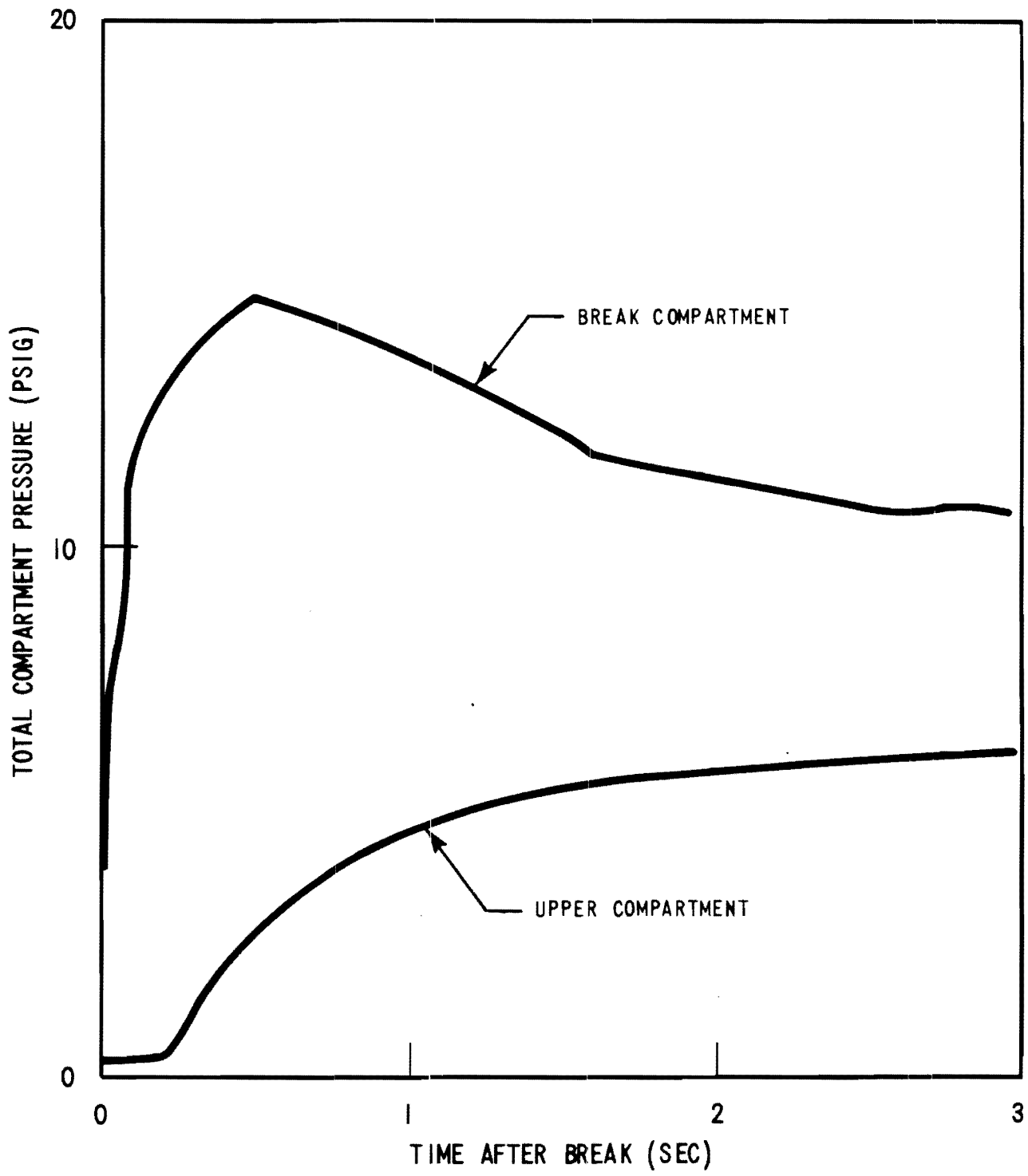

Figure 6.2.1-11 Upper and Lower Compartment Pressure Transient for Worst Case Break Compartment (Element 1) Having a DECL Break.

6266-14

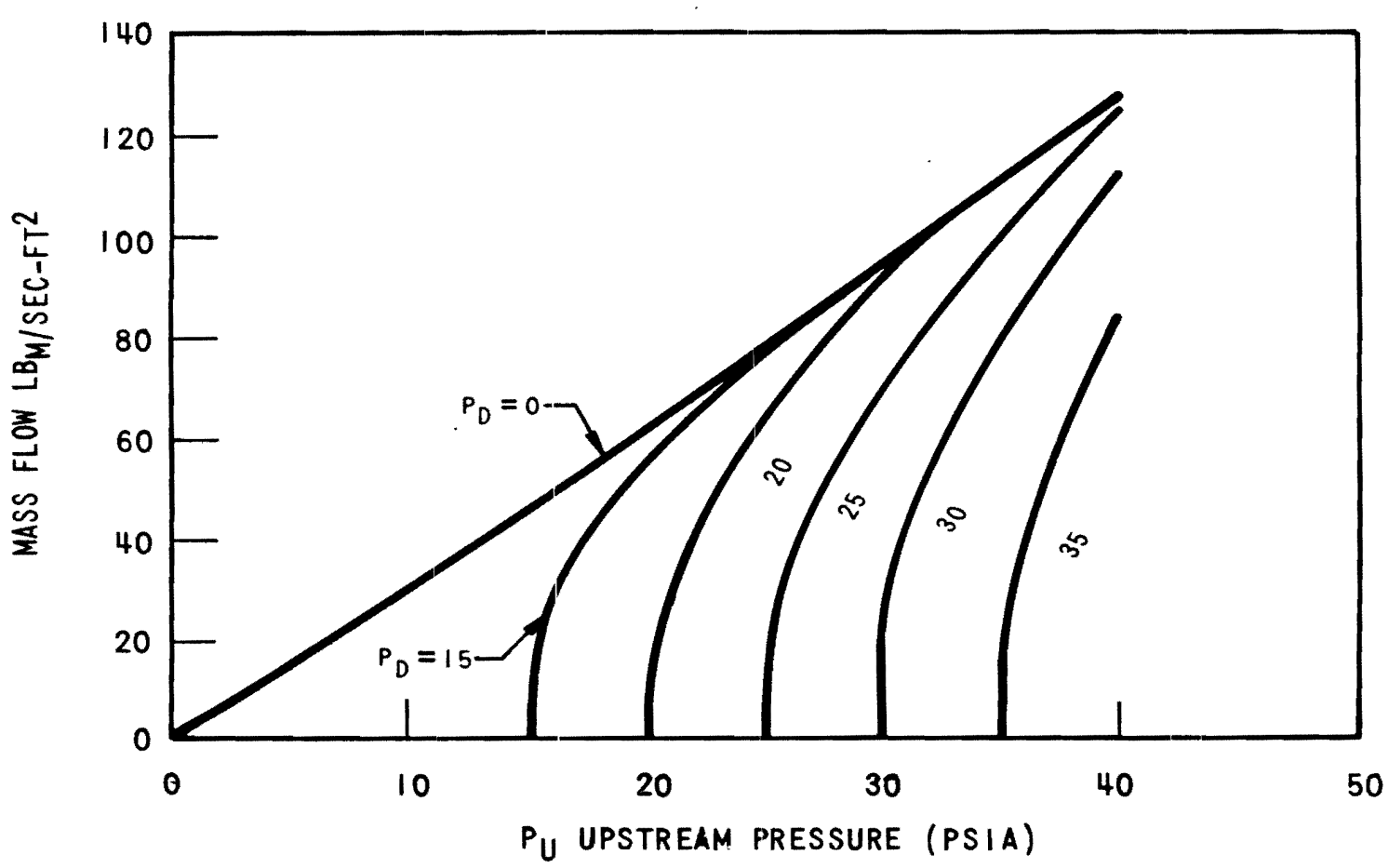

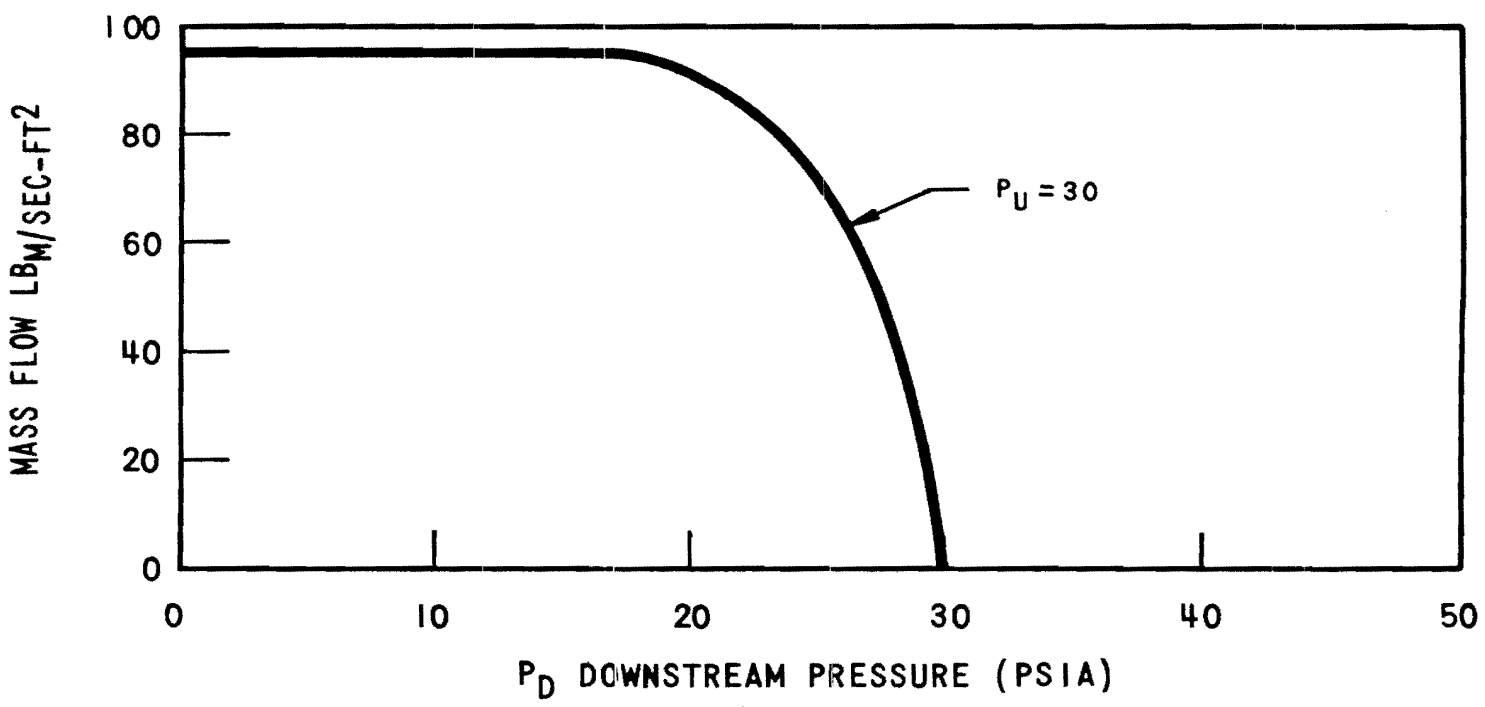

Figure 6.2.1-12 - Illustration of Choked Flow Characteristics

Figure 6.2.1-12 Illustration of Choked Flow Characteristics

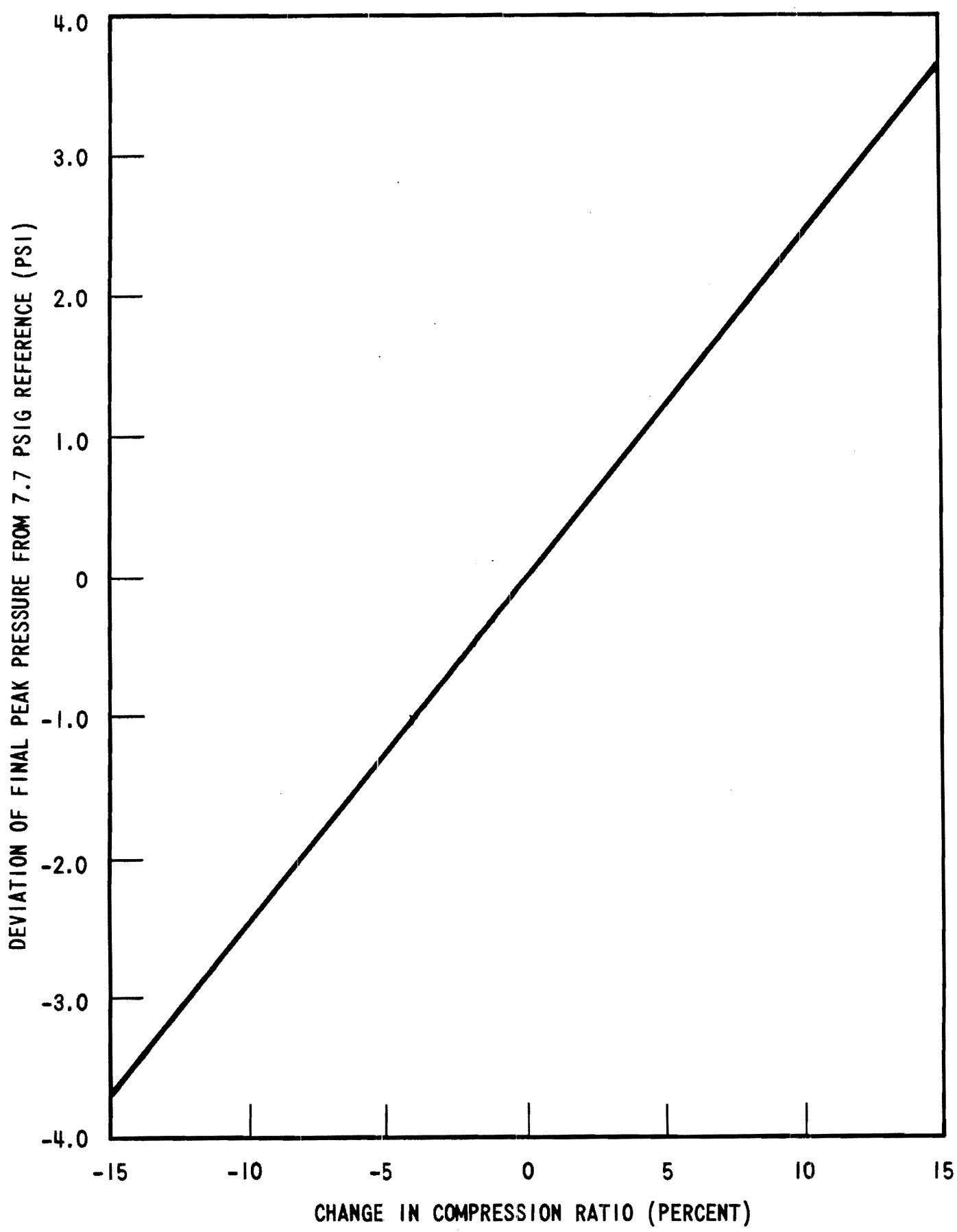

Figure 6.2.1-13 Sensitivity of Peak Pressure to Air Comrression Ratio

6067-6

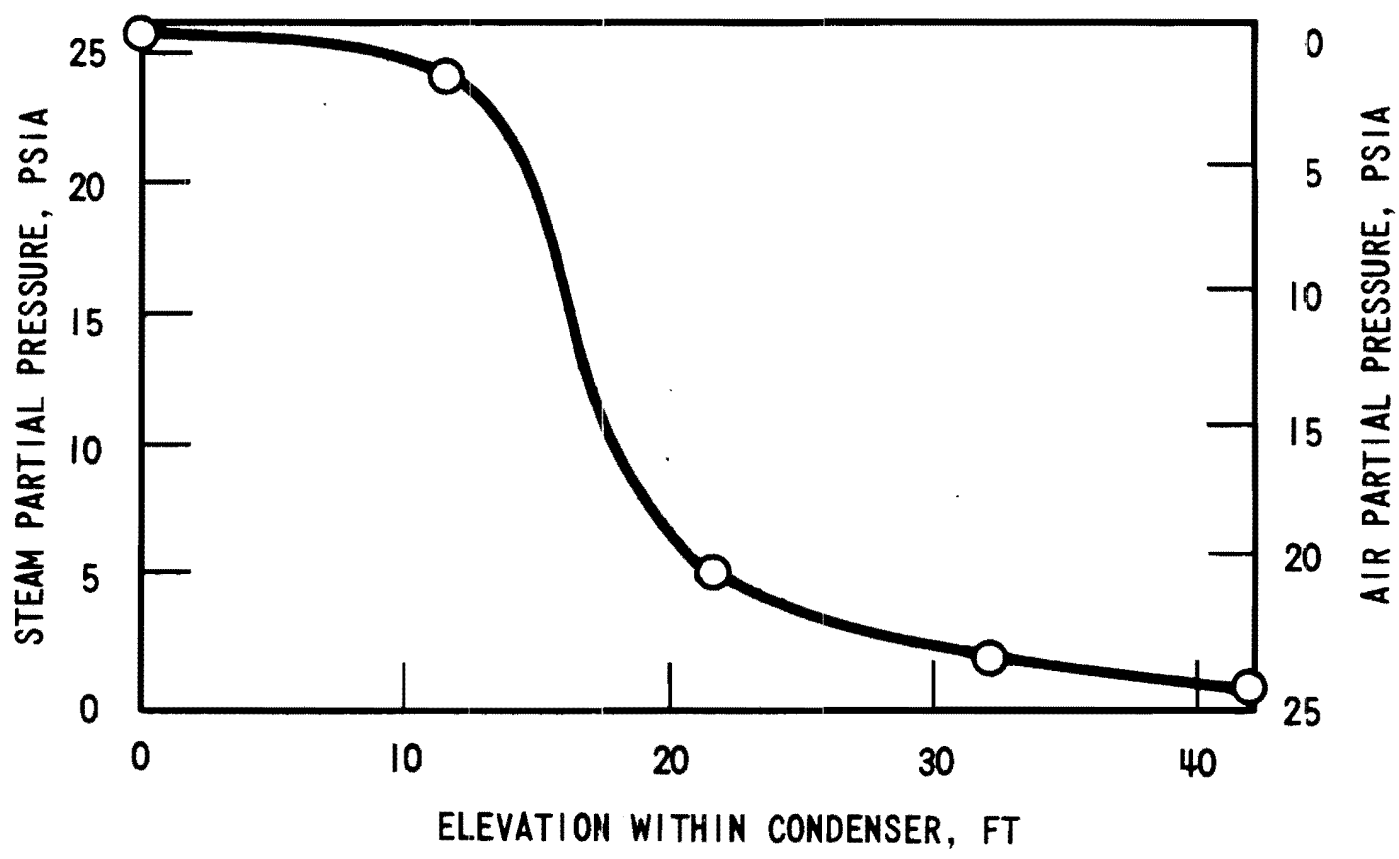

Figure 6.2.1-14 Steam Concentration in a Vertical Distribution Channel

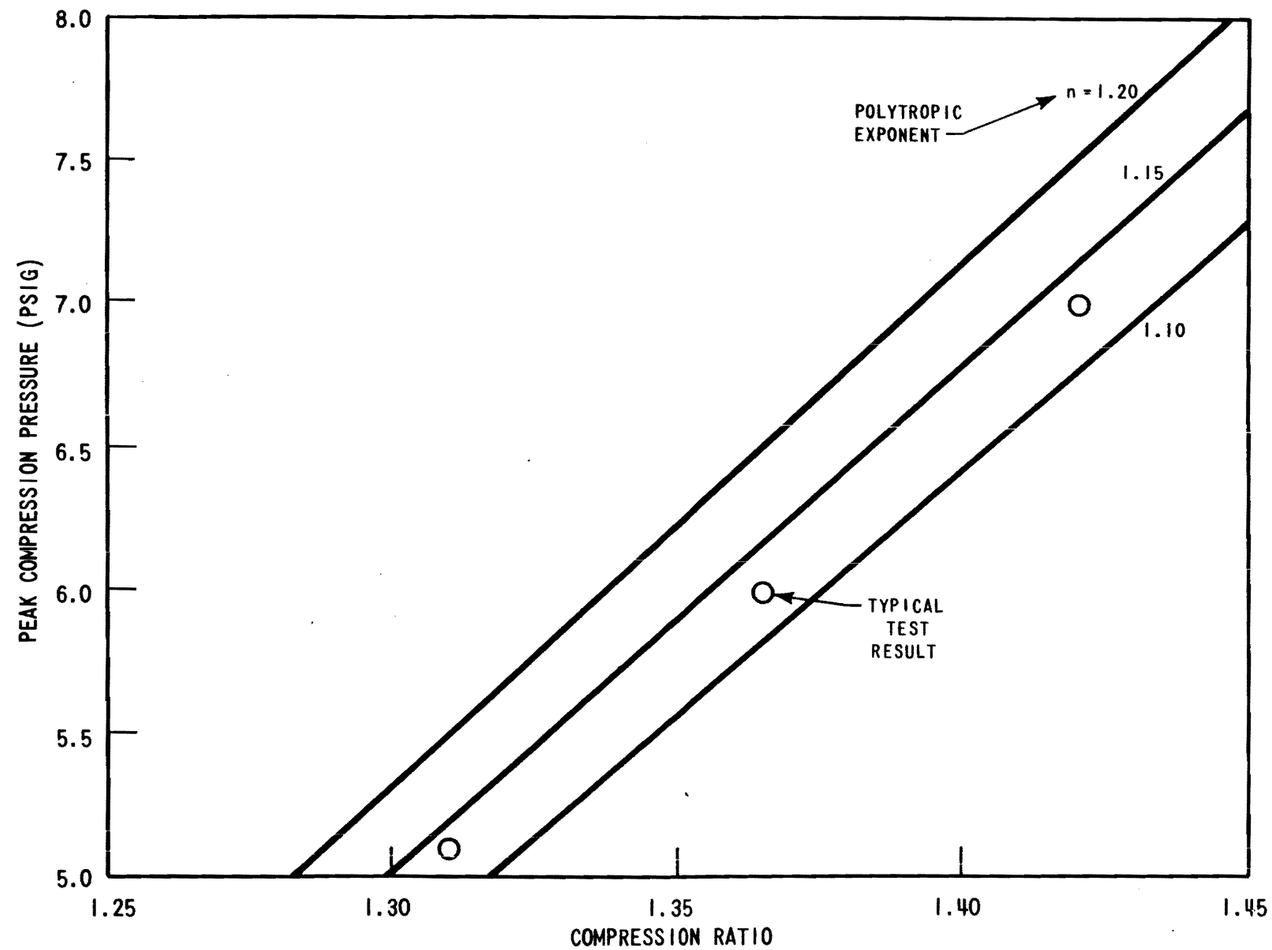

Figure 6.2.1-15 - Peak Comnression Pressure Versus Comnression Ratio

6067-5

Figure 6.2.1-15 Peak Comnression Pressure Versus Compression Ratio

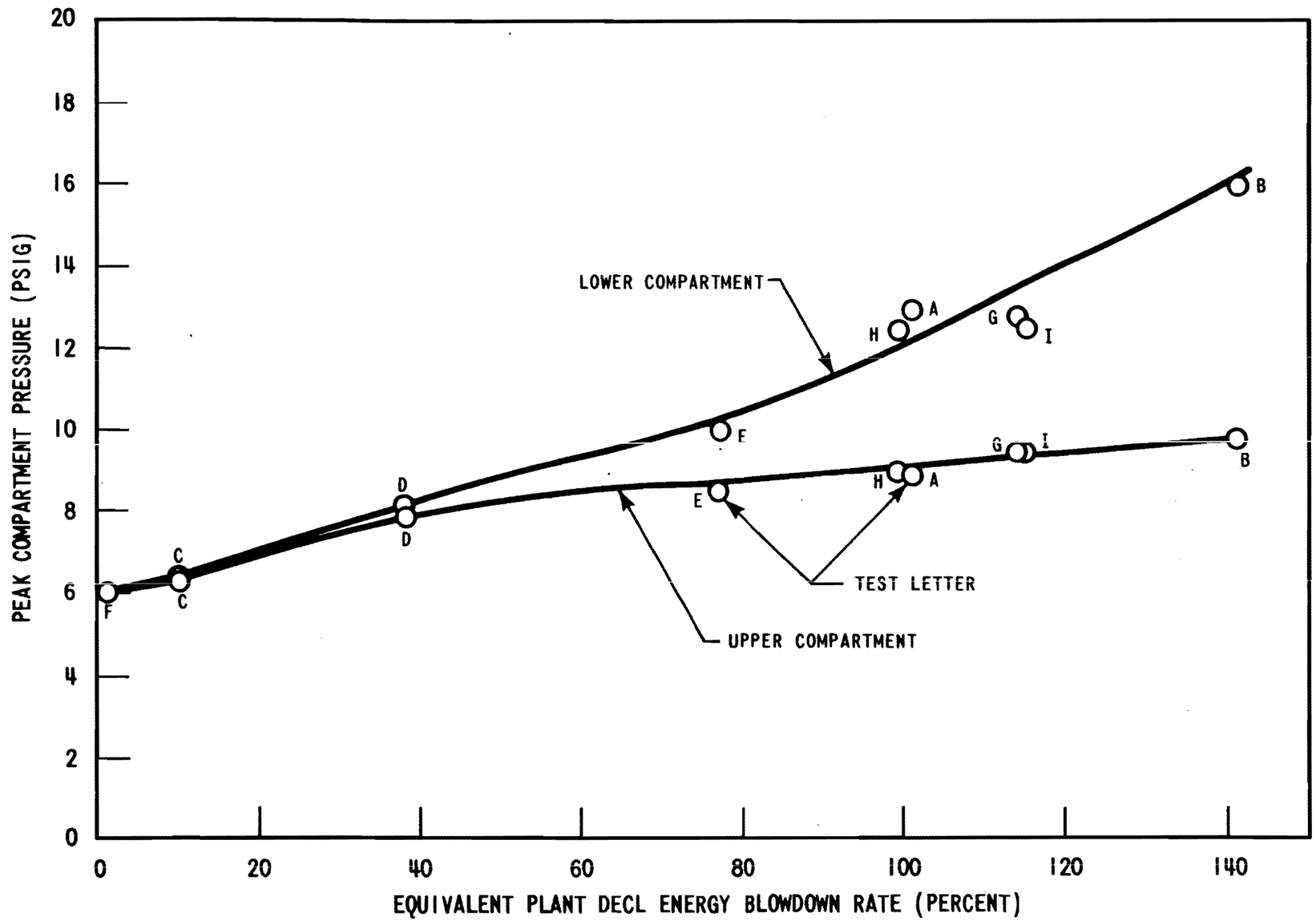

Figure 6.2.1-16 - **Peak Compartment Pressure versus Blowdown Rate**

7200-29

Figure 6.2.1-16 Peak Compartment Pressure versus Blowdown Rate

6067-12

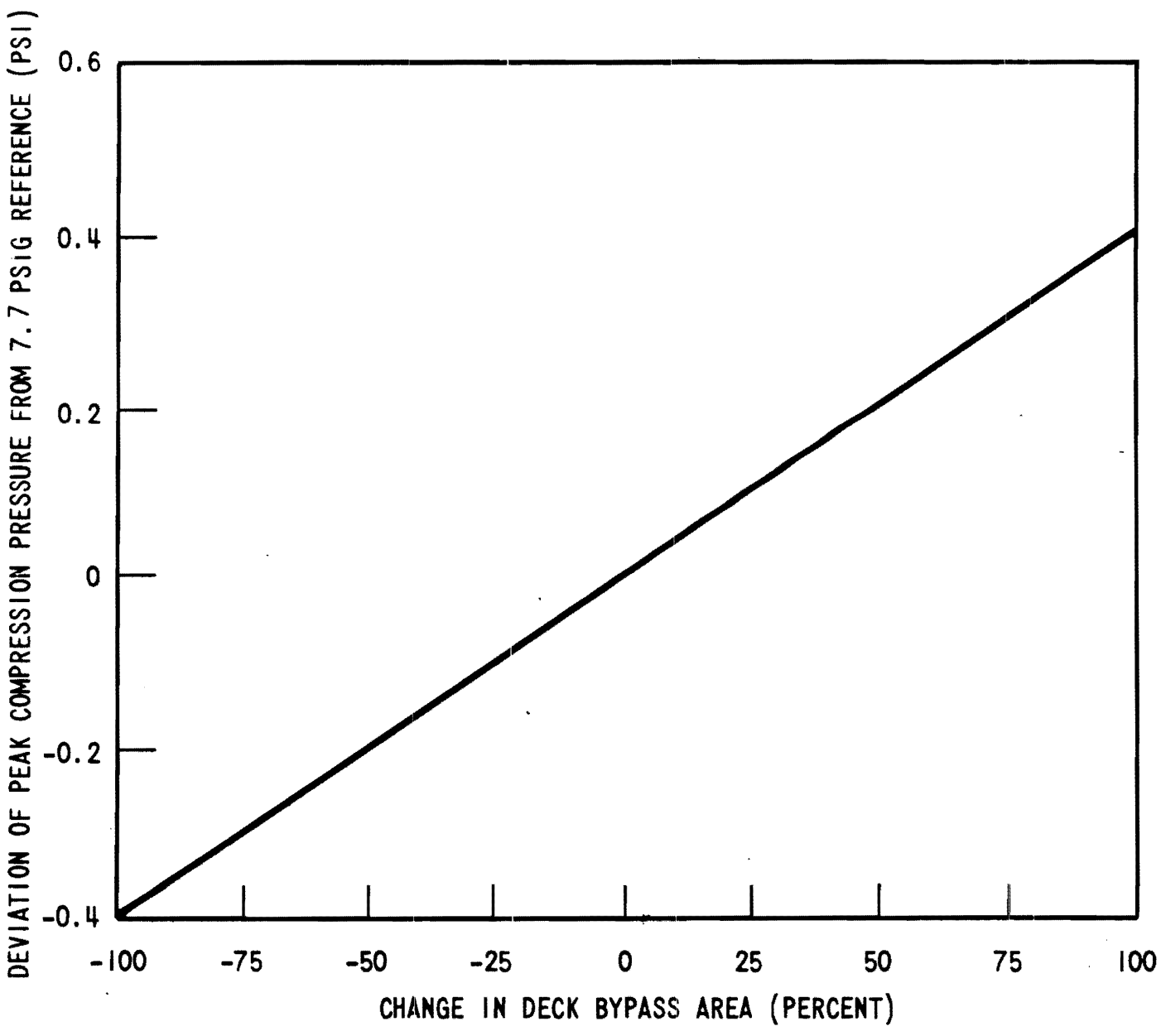

Figure 6.2.1-17 Sensitivity of Peak Compression Pressure to Deck Bypass

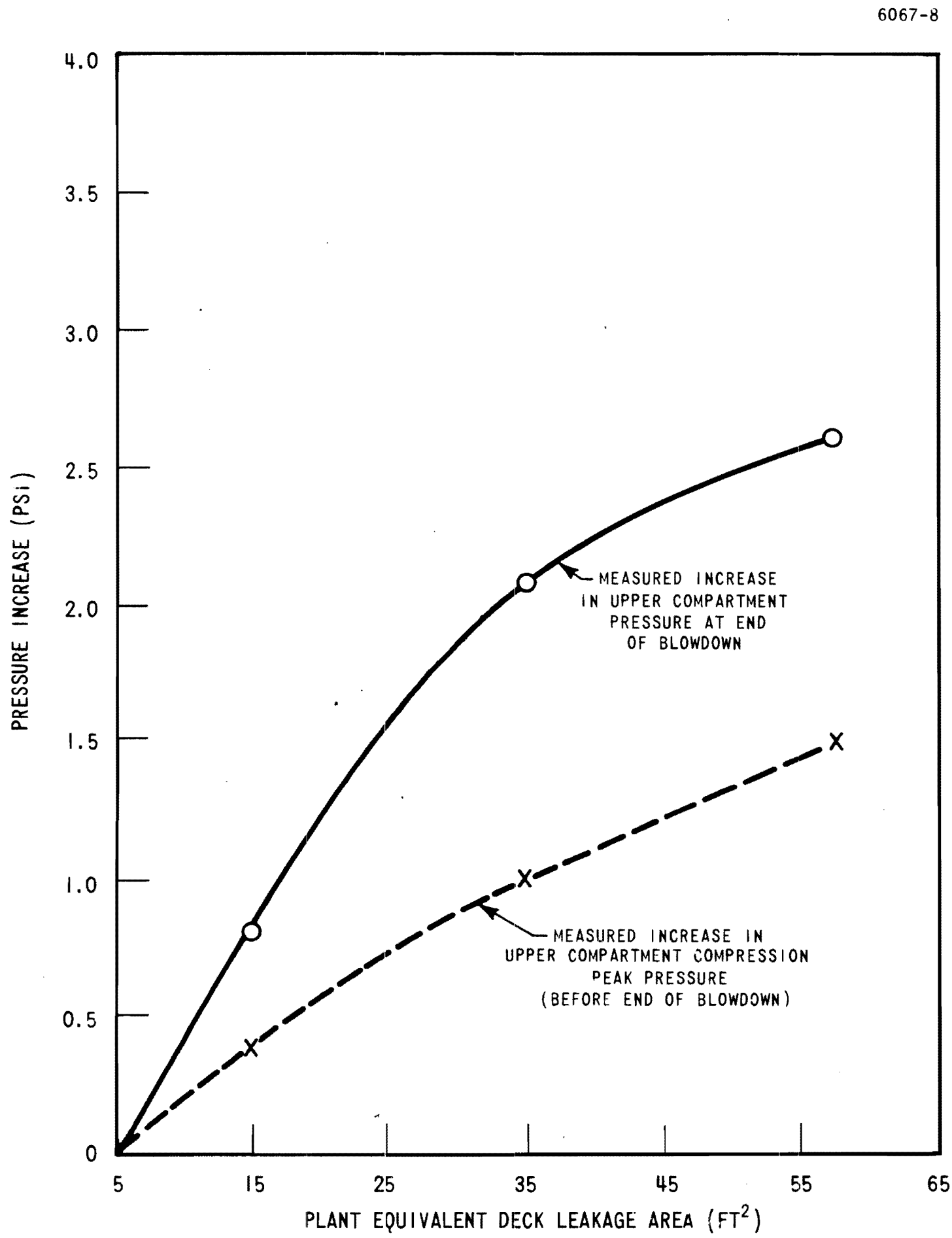

Figure 6.2.1-18 Pressure Increase versus Deck Area from Deck Leakage Tests

6067-13

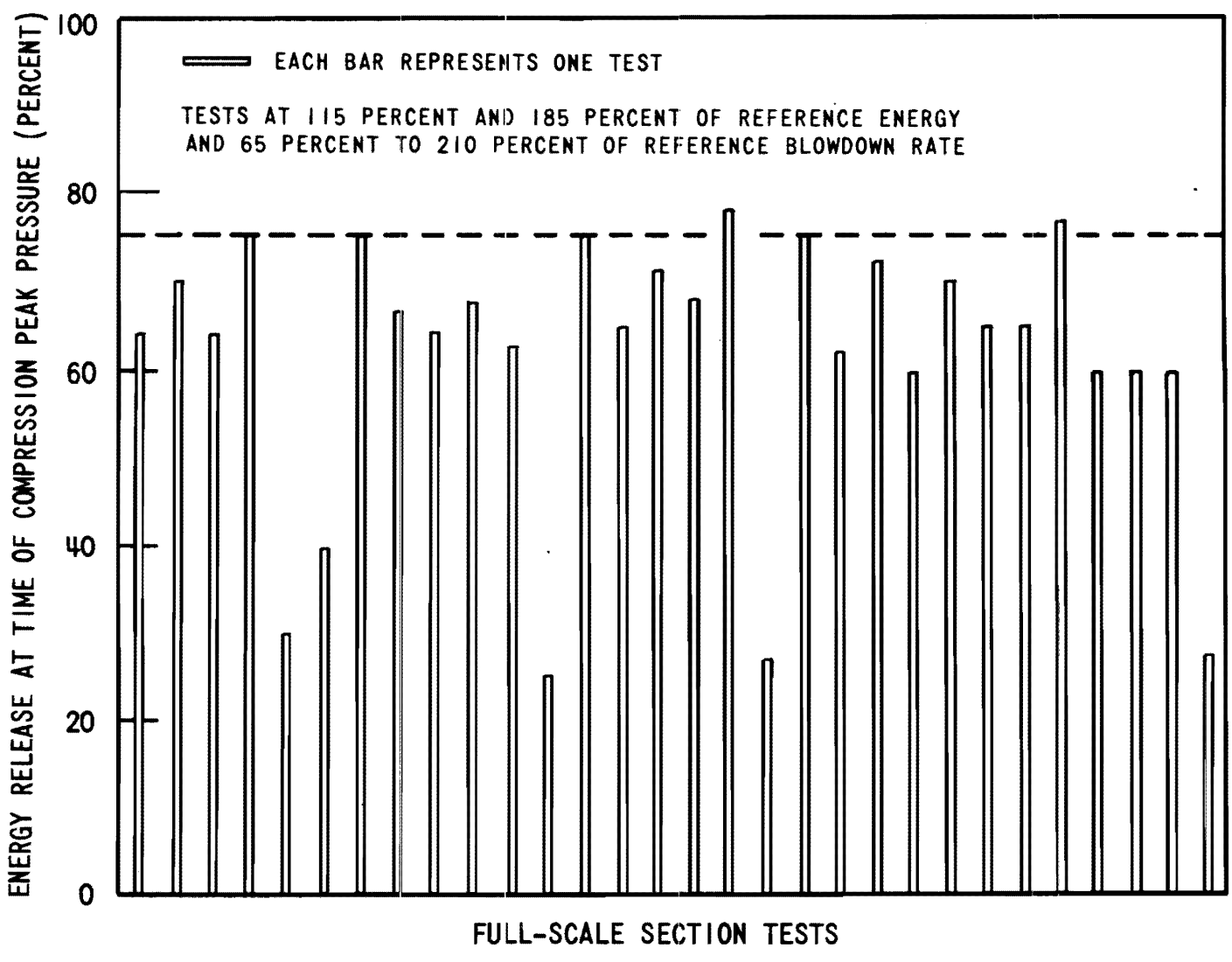

Figure 6.2.1-19 Energy Release at Time of Compression Peak Pressure From Full-Scale Section Tests with 1-Foot Diameter Baskets

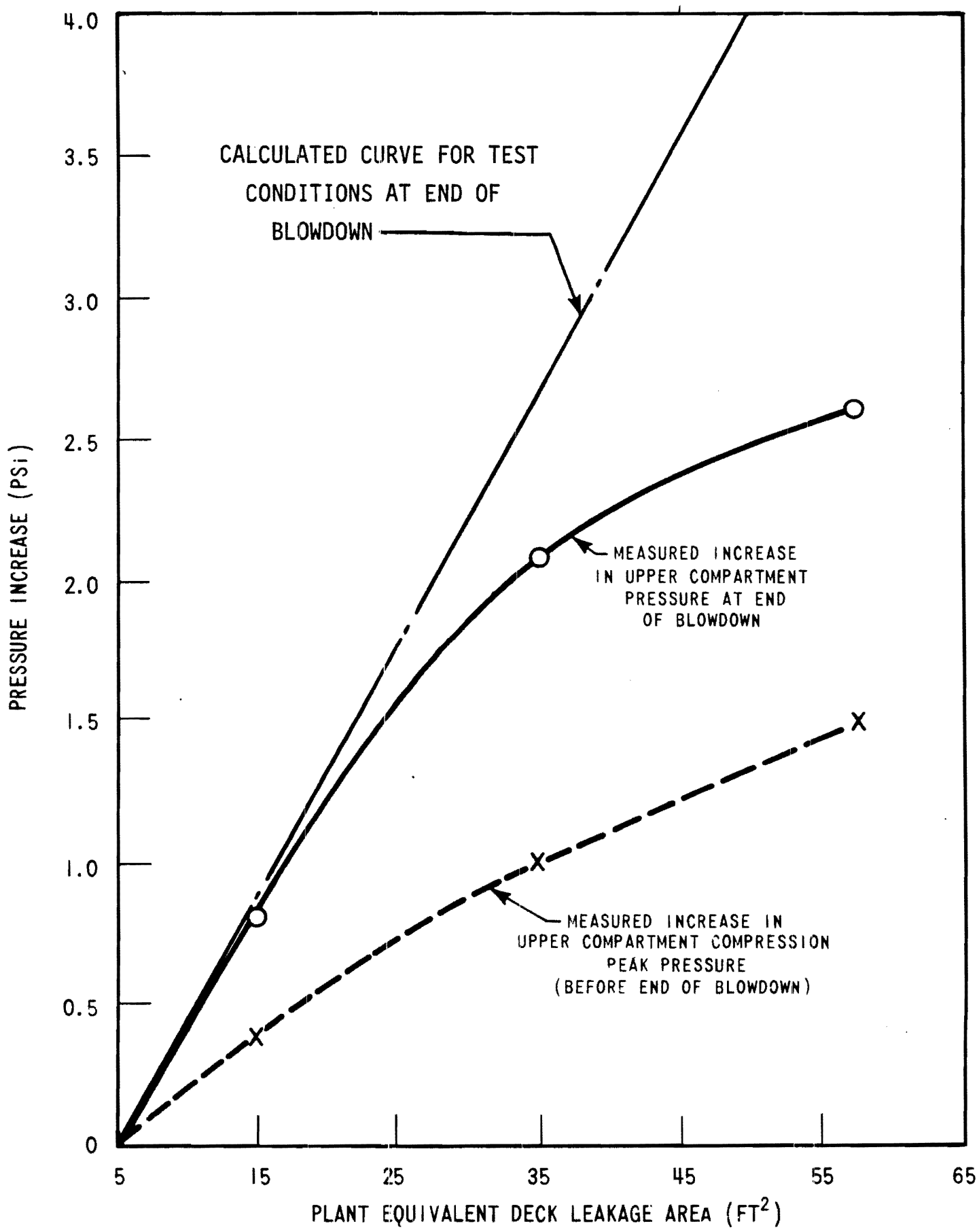

Figure 6.2.1-20 Pressure Increase versus Deck Area from Deck Leakage Tests

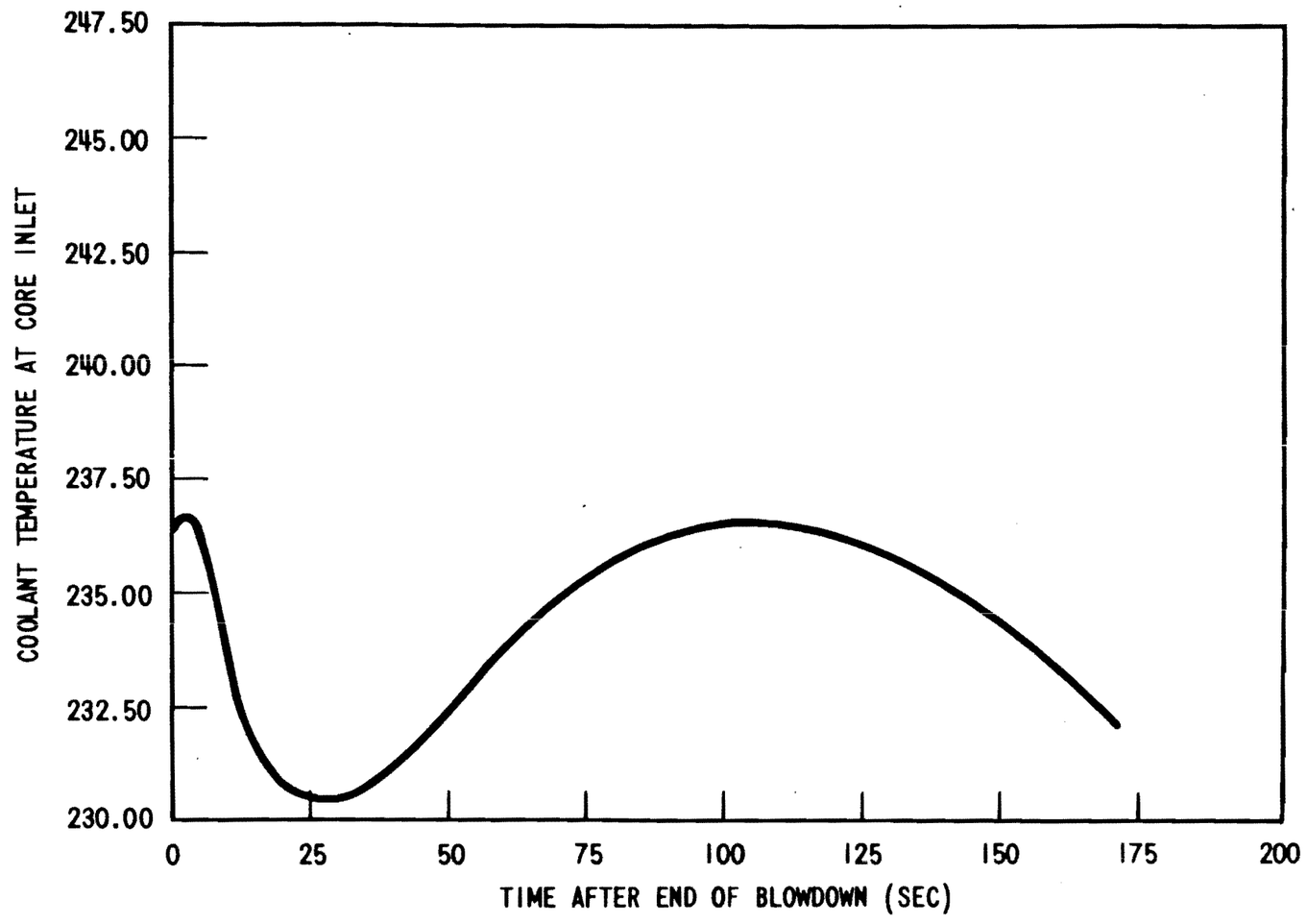

Figure 6.2.1-21 Coolant Temperature at Core Inlet

Figure 6.2.1-21 Coolant Temperature at Core Inlet

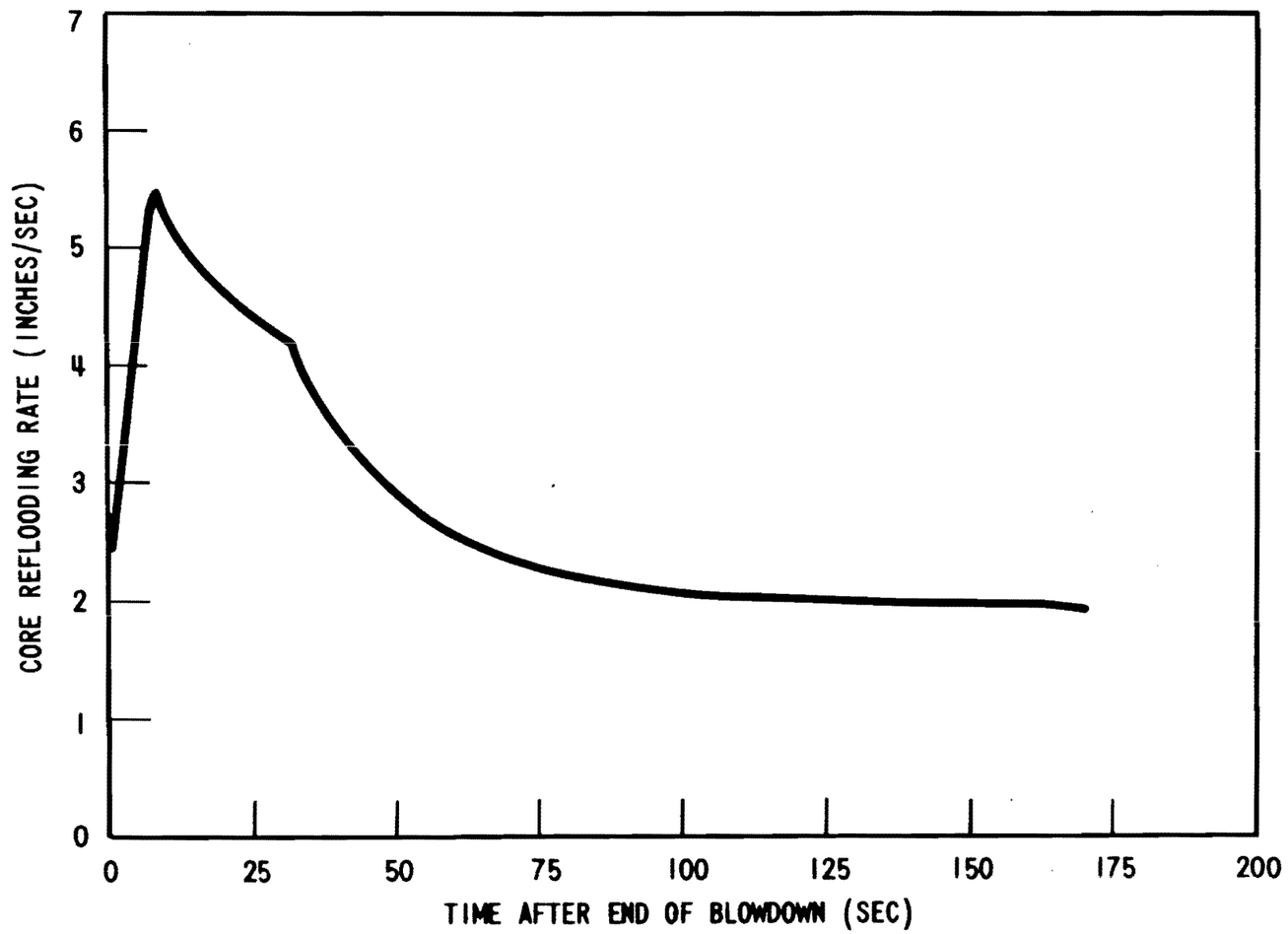

Figure 6.2.1-22. Core Reflooding Rate – V_{IN}.

10.103-16

Figure 6.2.1-22 Core Reflooding Rate - V_{in}

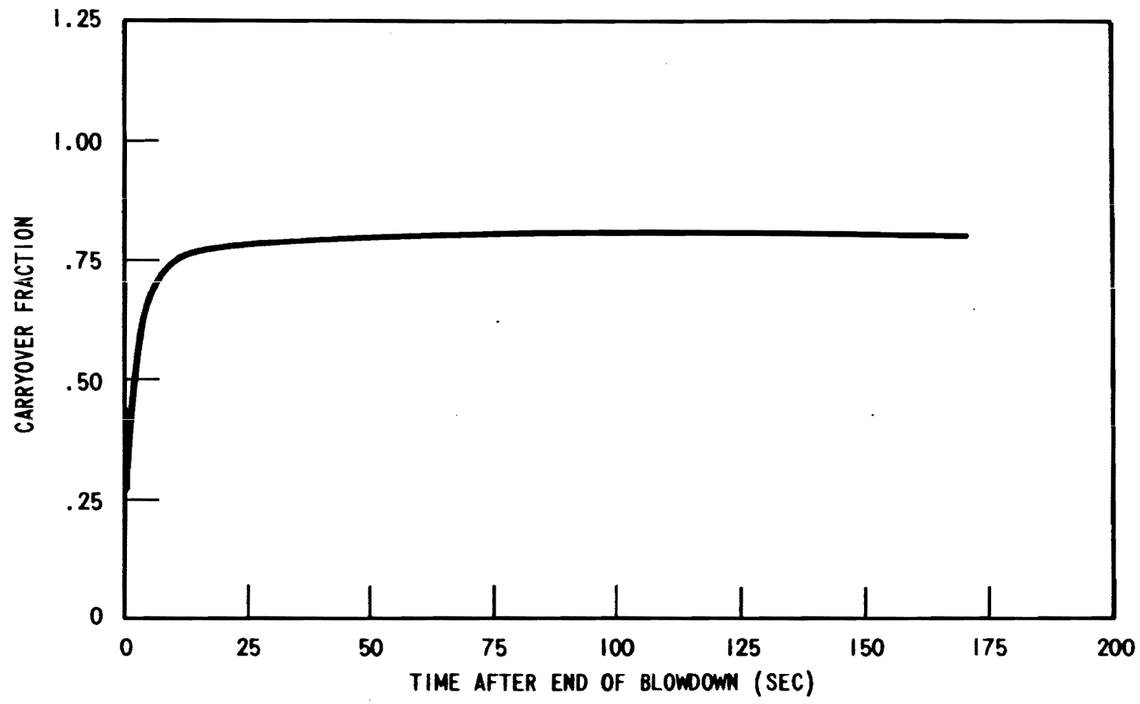

Figure 6.2.1-23. Carryover Fraction – F_{OUT}.

10.103-17

Figure 6.2.1-23 Carryover Fraction - F_{out}

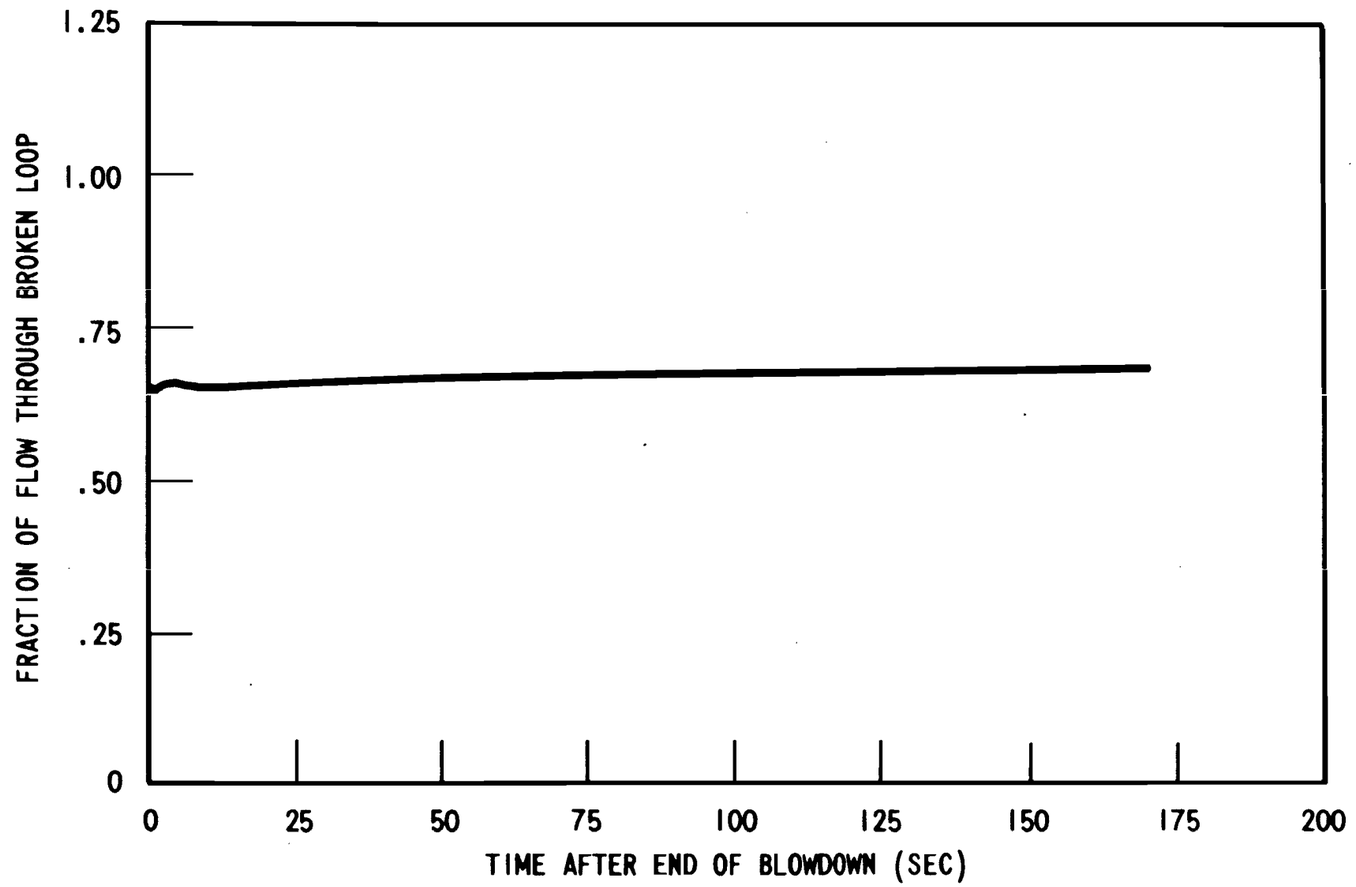

Figure 6.2.1 24. Fraction of Flow through Broken Loop.

Figure 6.2.1-24 Fraction of Flow through Broken Loop.

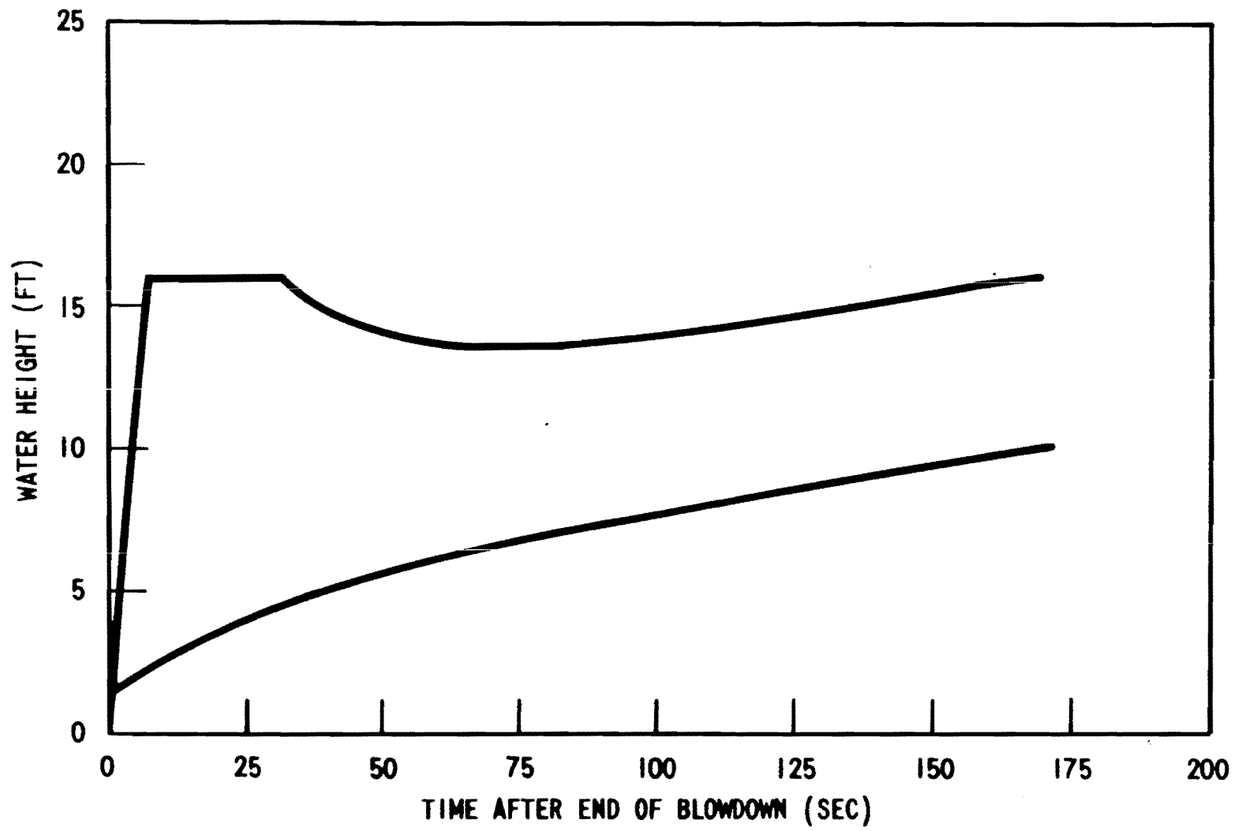

Figure 6.2.1 25. Post-Blowdown Downcomer and Core Water Height.

Figure 6.2.1-25 Post-Blowdown Downcomer and Core Water Height.

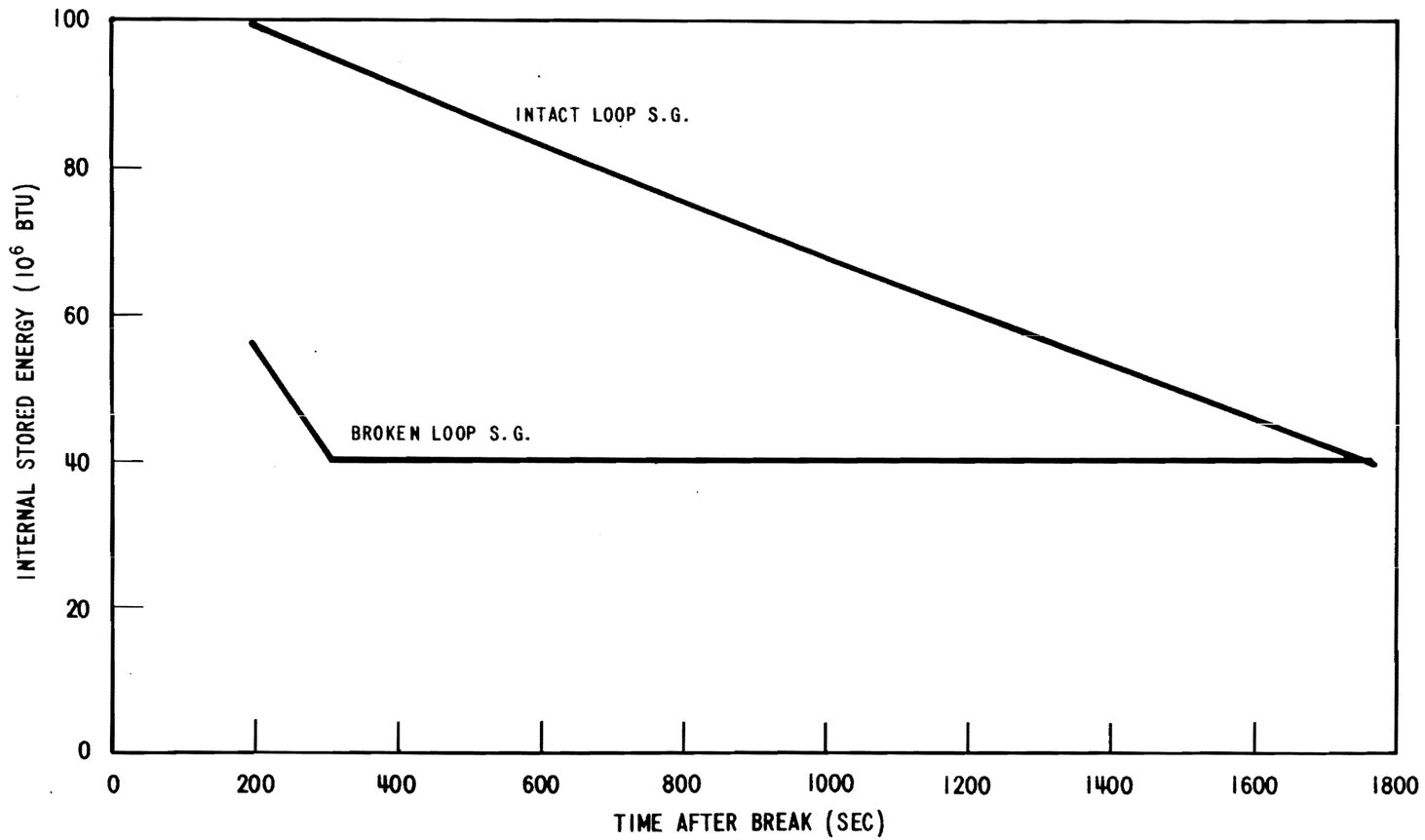

Figure 6.2.1-26. Steam Generator Heat Content.

10.103-20

Figure 6.2.1-26 Steam Generator Heat Content.

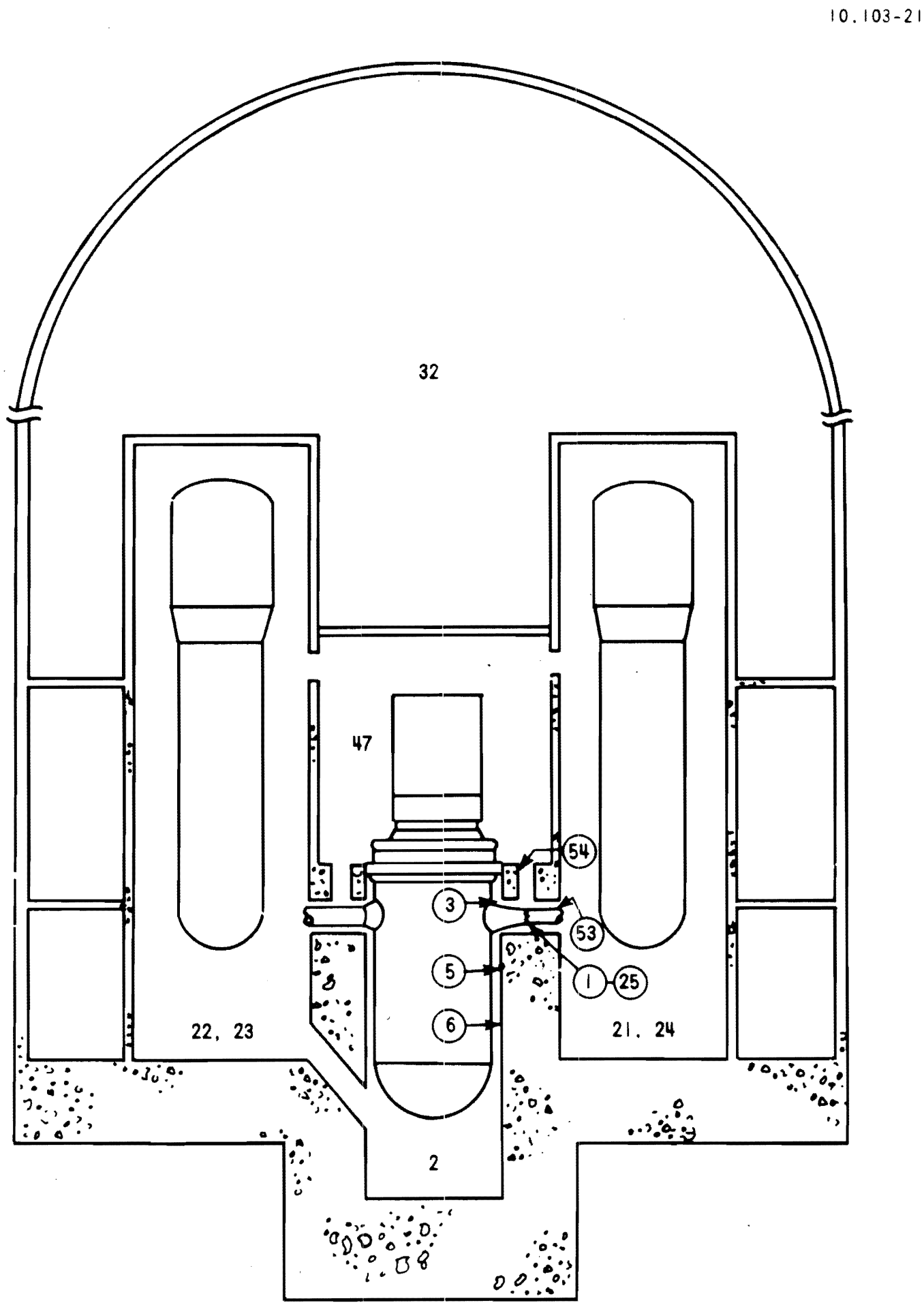

Figure 6.2.1-27 Containment Model Schematic.

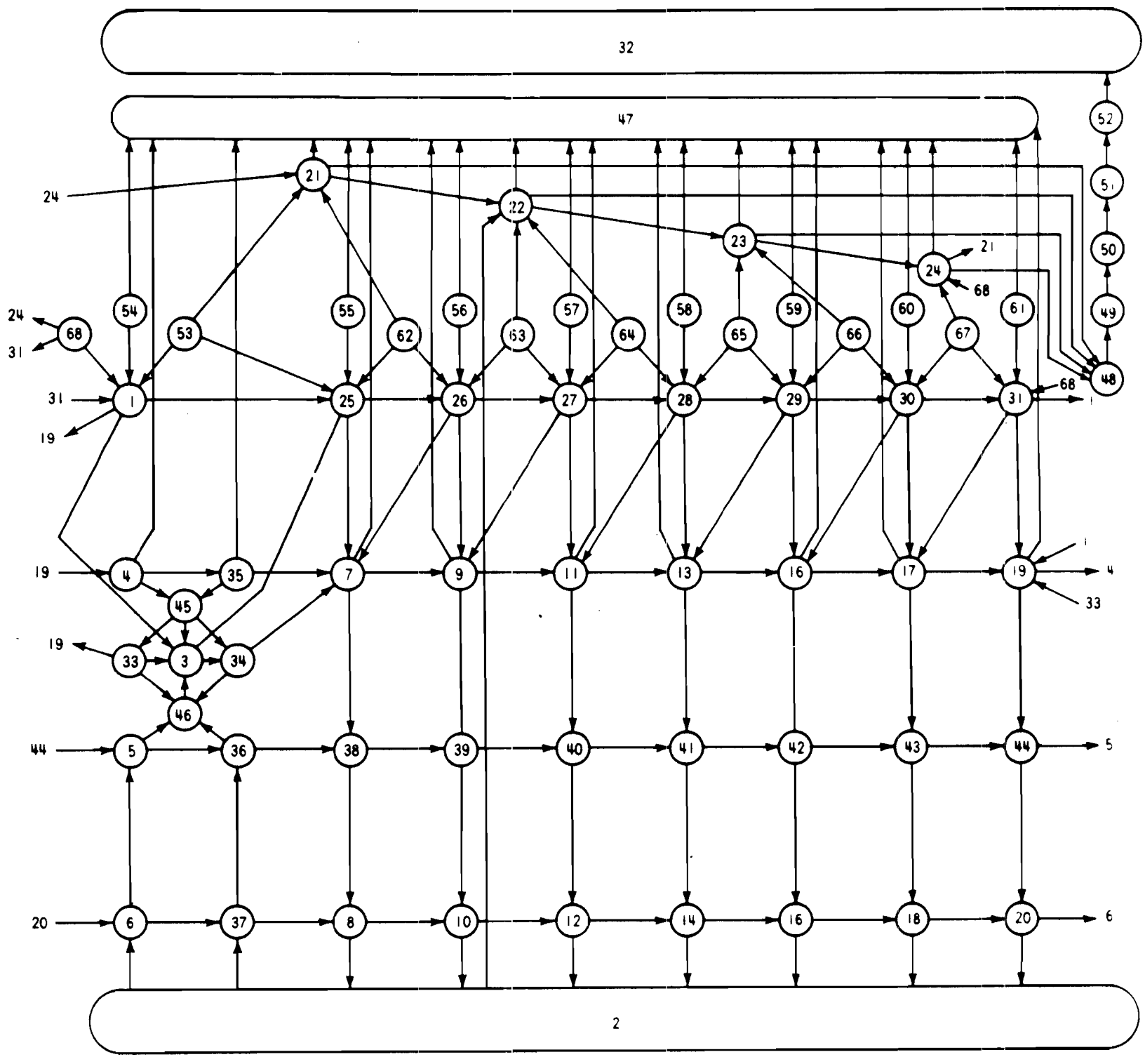

Figure 6.2.1-28 Reactor Cavity TMD Network.

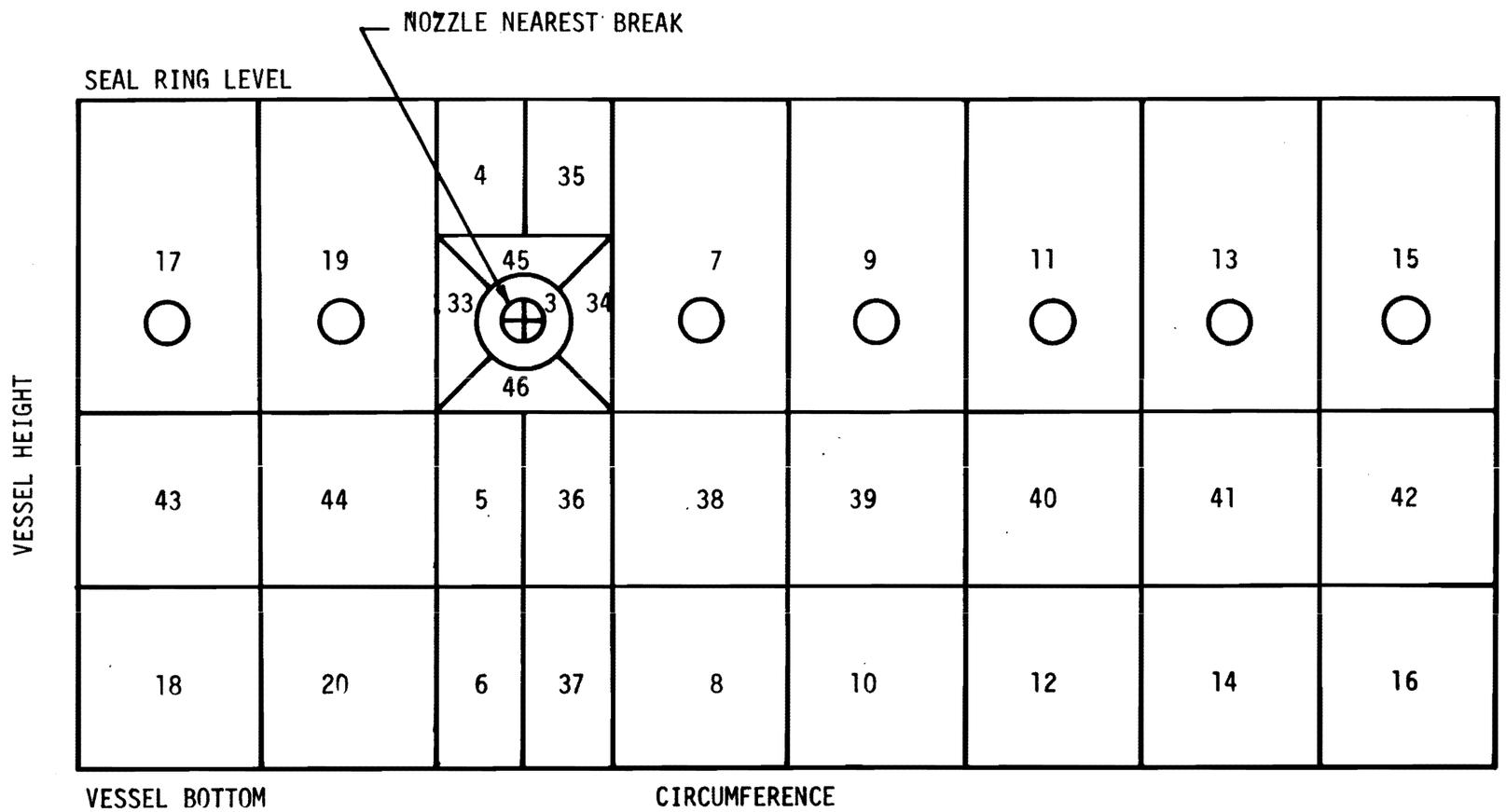

Figure 6.2.1-29 Reactor Vessel Annulus

10.103-23

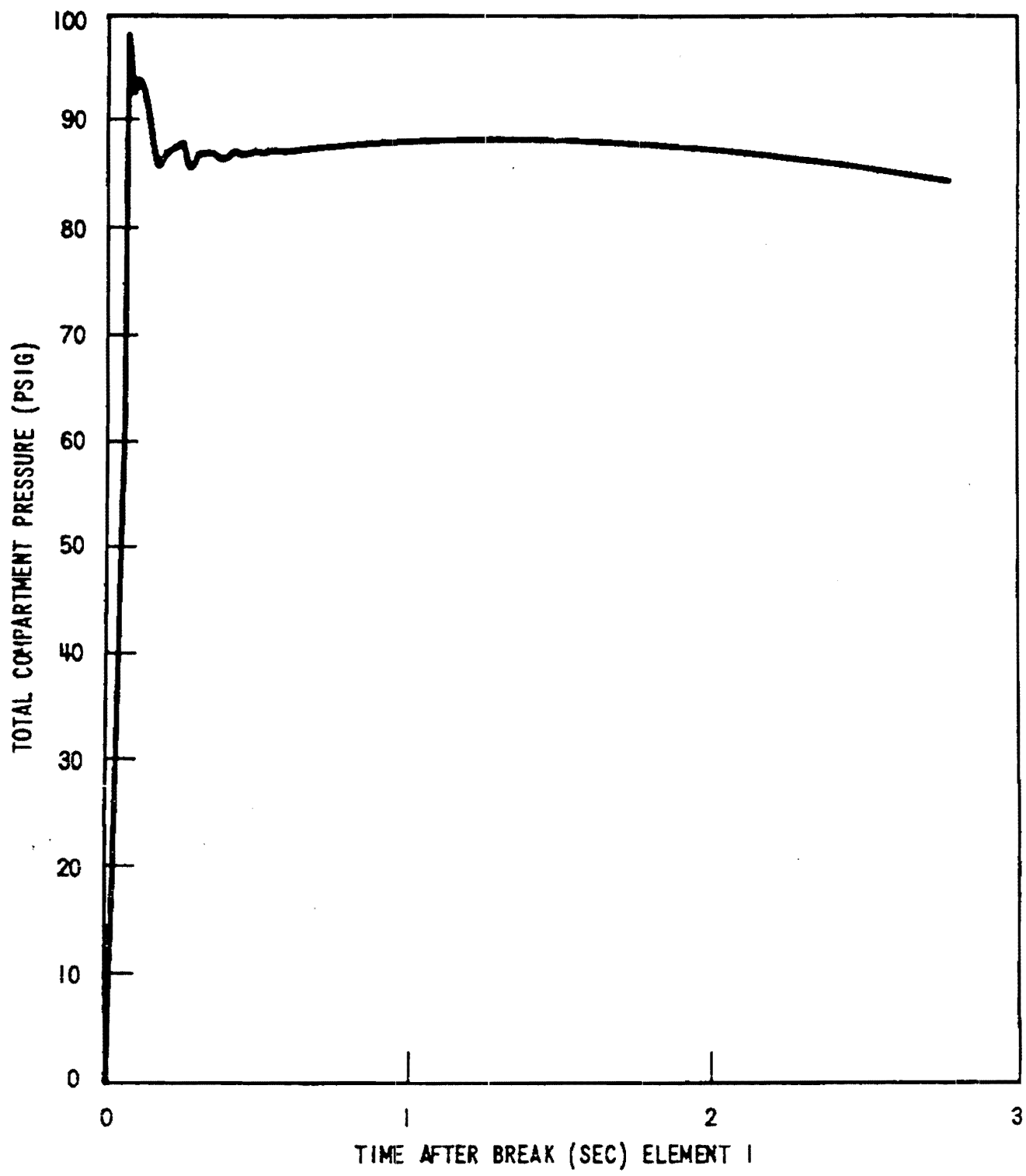

AMENDMENT 85

Figure 6.2.1-30 127 Square Inch Cold Leg Break (Reactor Cavity Analysis)

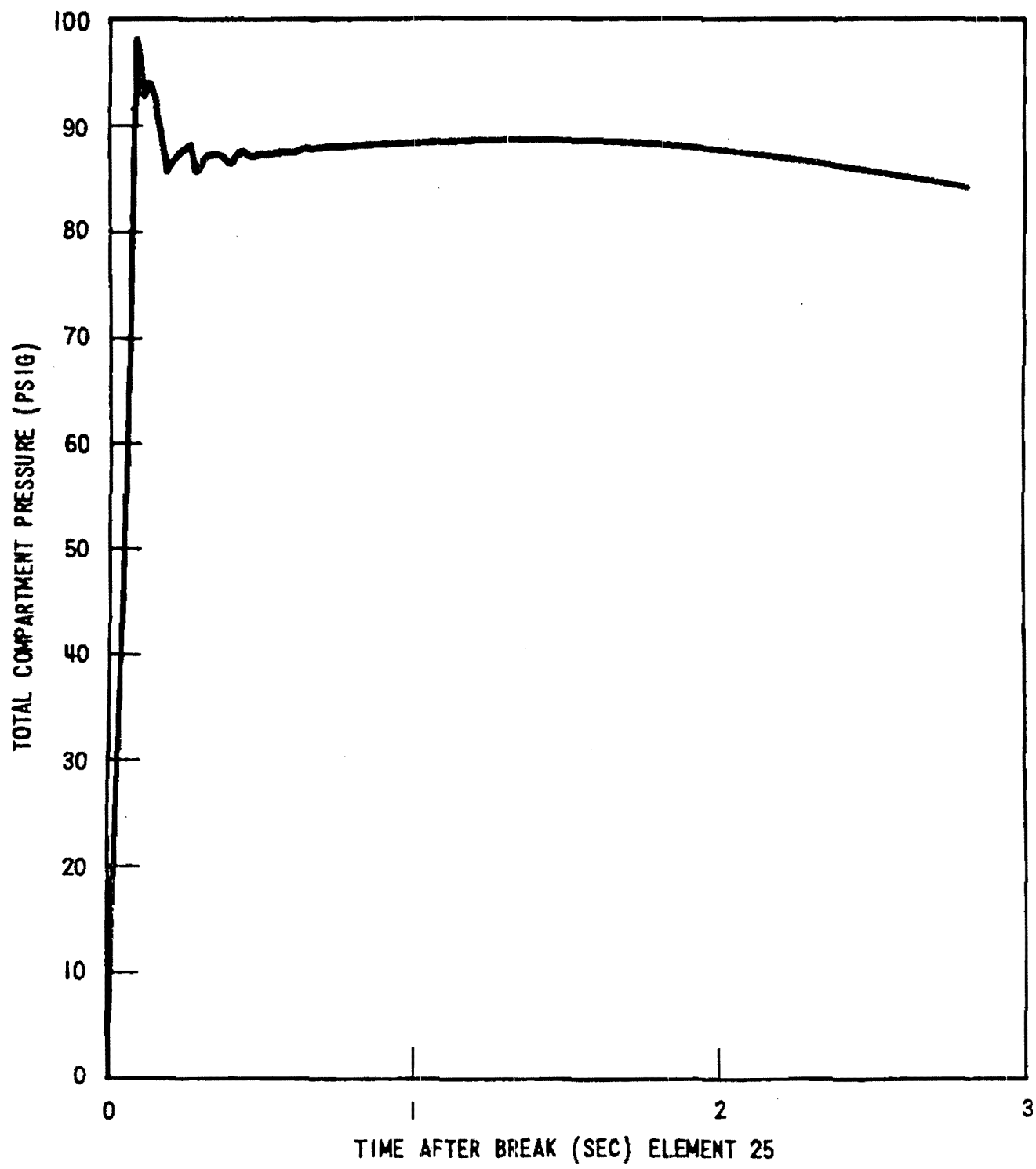

AMENDMENT 85

Figure 6.2.1-31 127 Square Inch Cold Leg Break (Reactor Cavity Analysis)

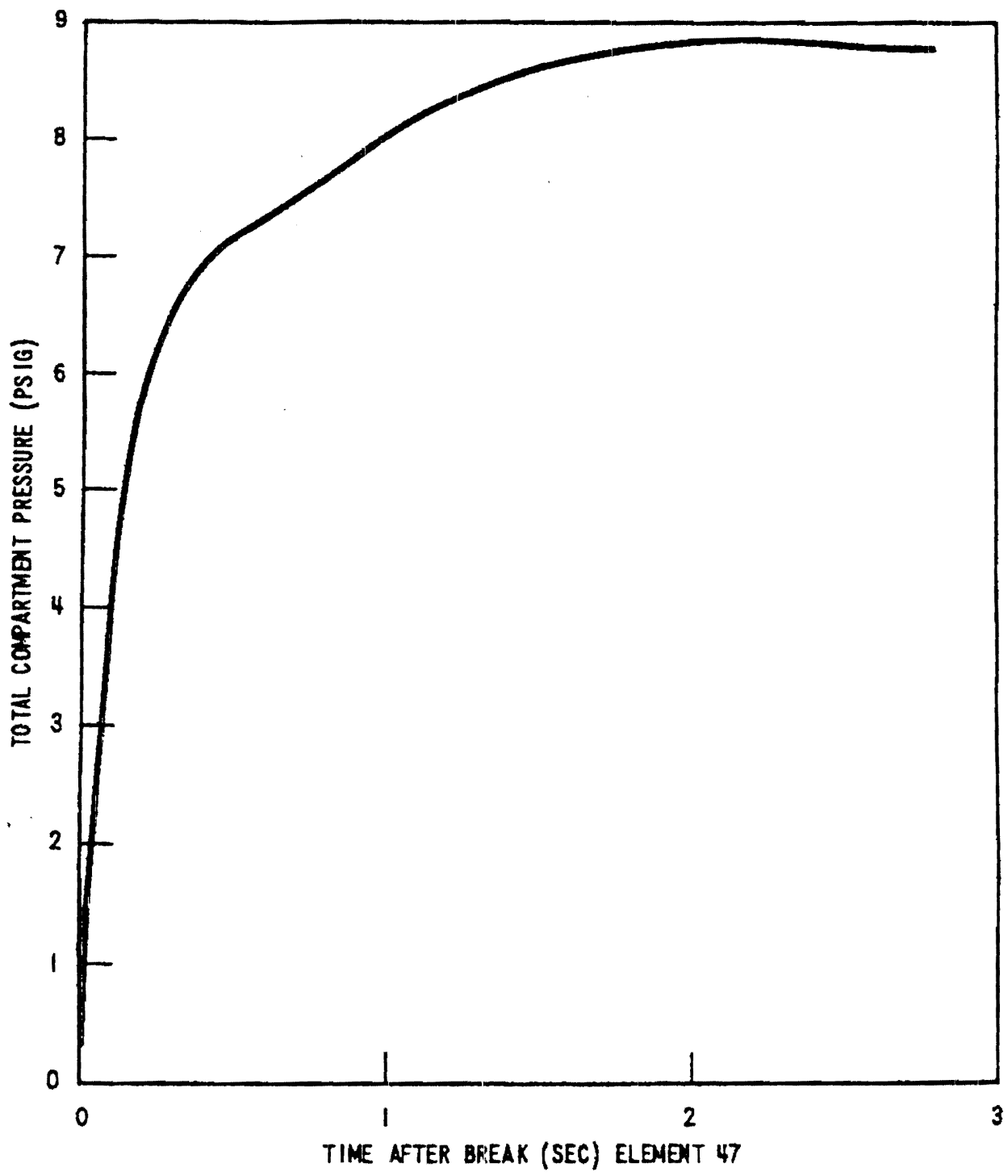

AMENDMENT 85

Figure 6.2.1-32 127 Square Inch Cold Leg Break (Reactor Cavity Analysis)

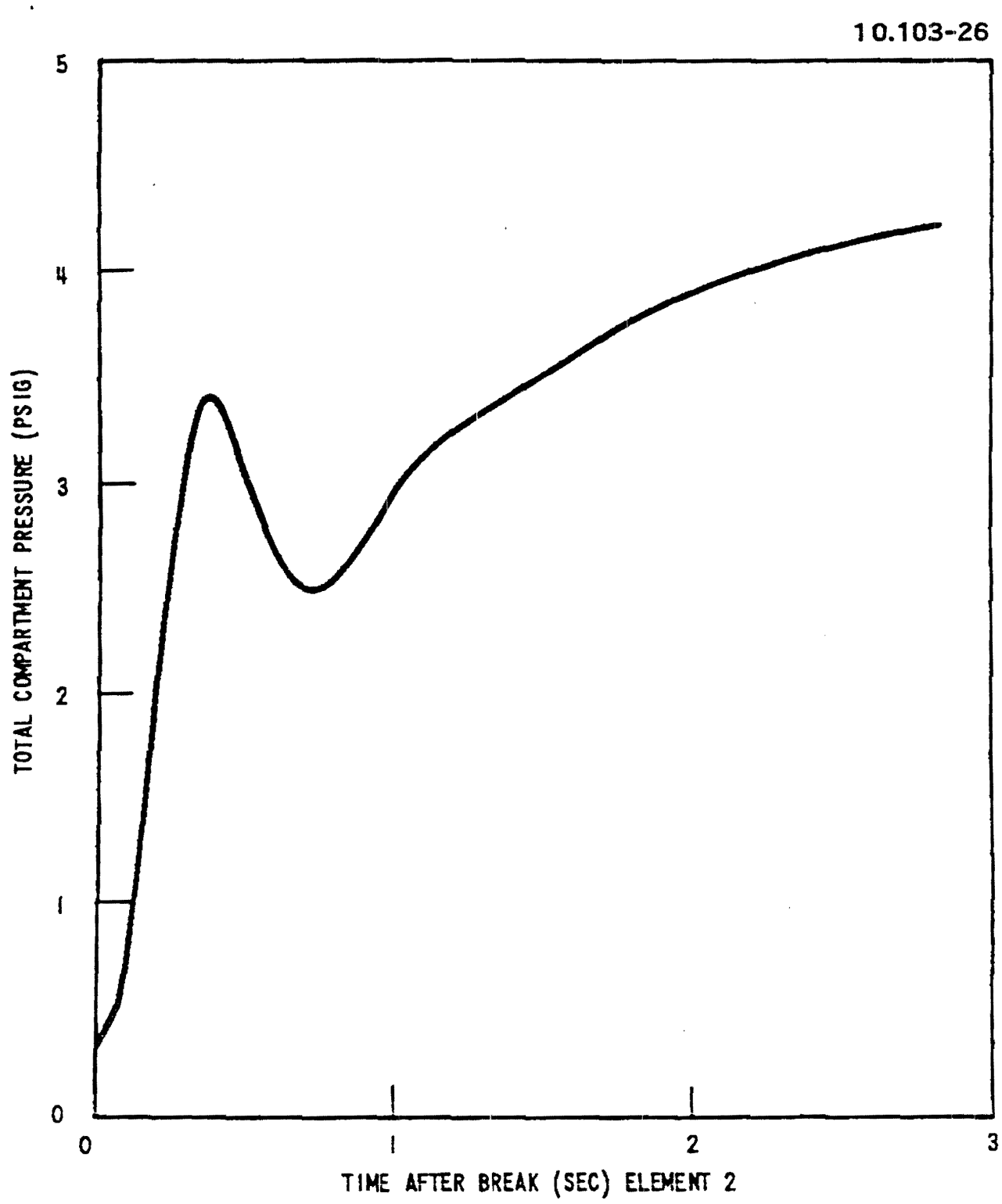

AMENDMENT 85

Figure 6.2.1-33 127 Square Inch Cold Leg Break (Reactor Cavity Analysis)

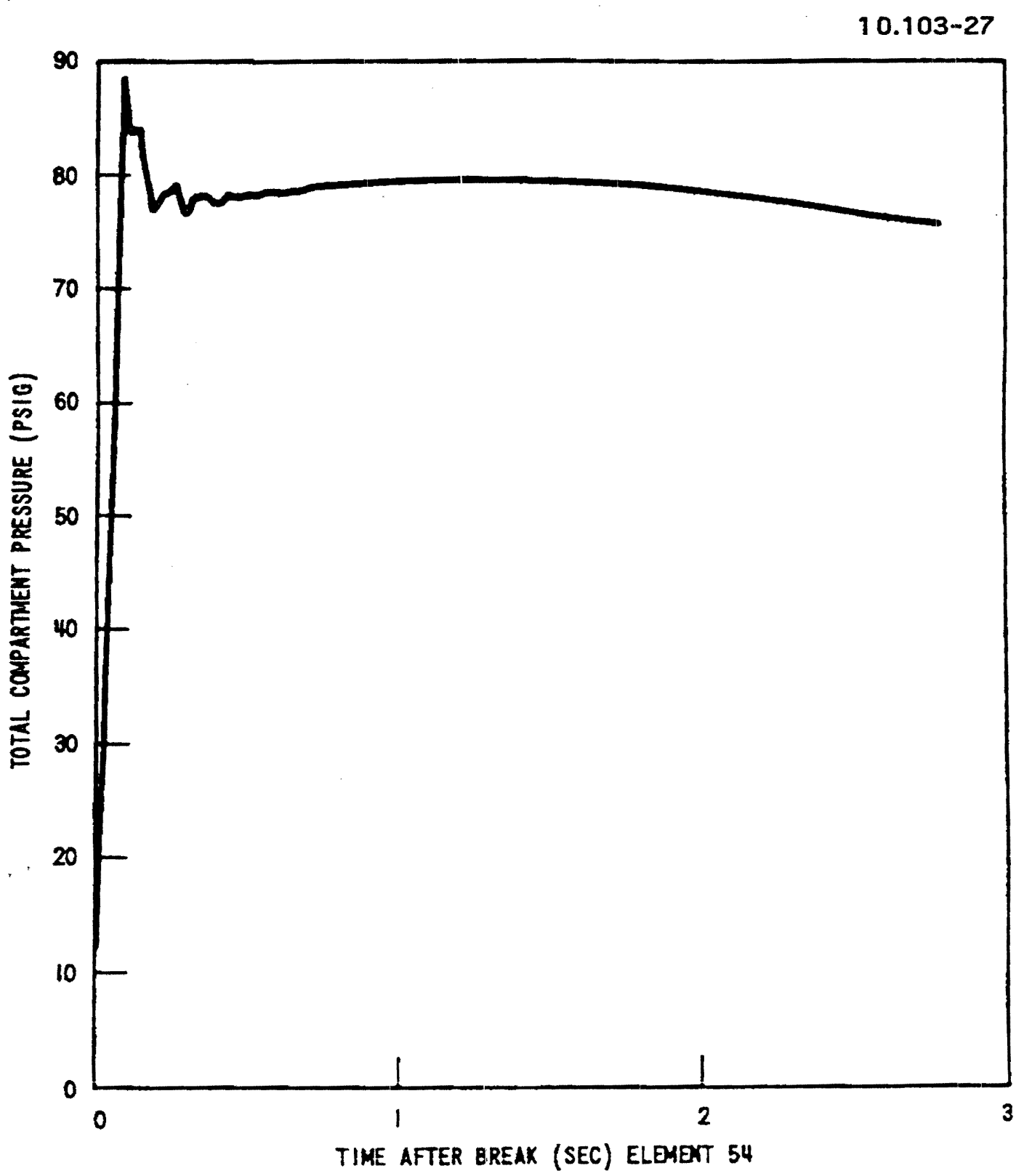

AMENDMENT 85

Figure 6.2.1-34 127 Square Inch Cold Leg Break (Reactor Cavity Analysis)

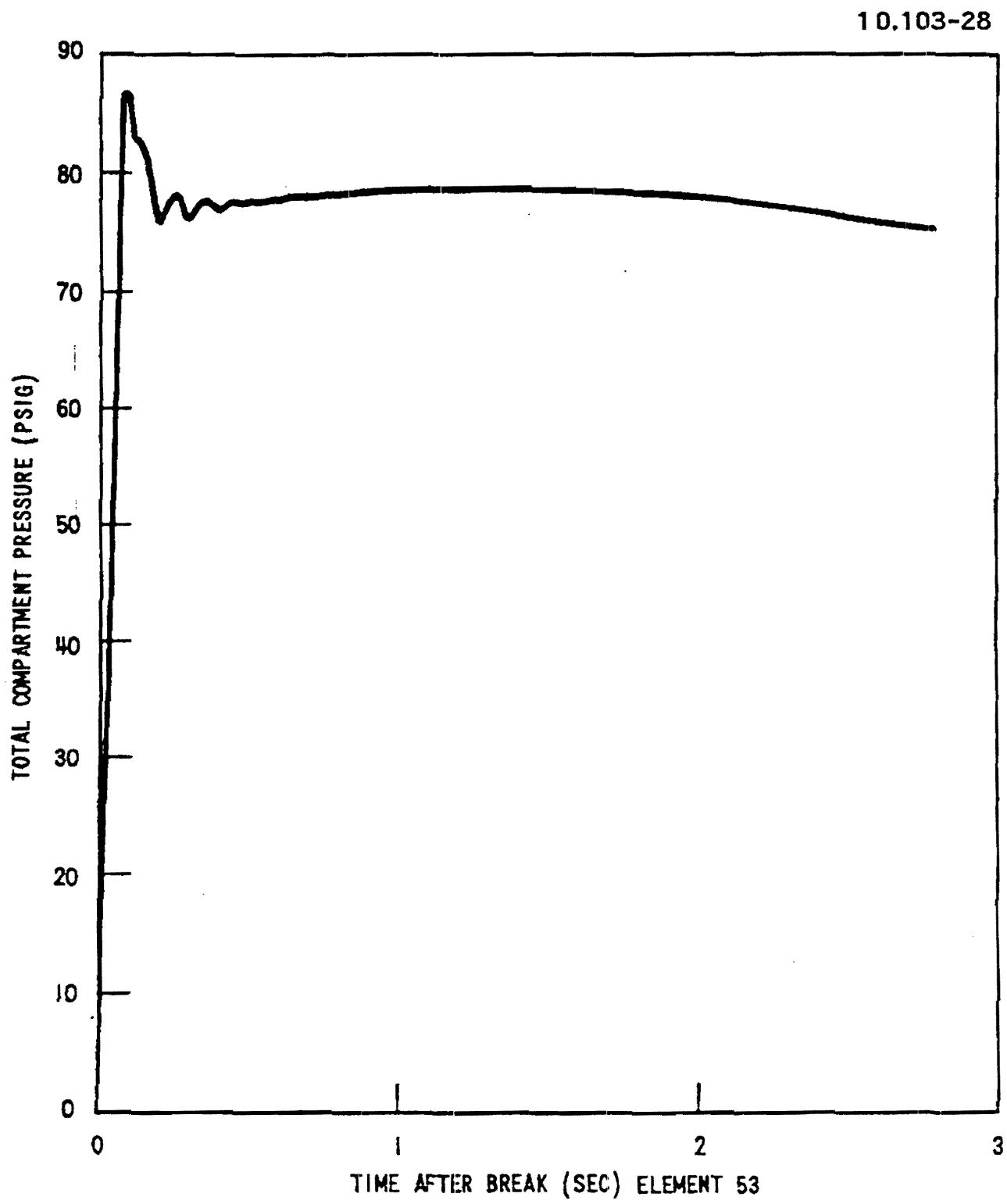

AMENDMENT 85

Figure 6.2.1-35 127 Square Inch Cold Leg Break (Reactor Cavity Analysis)

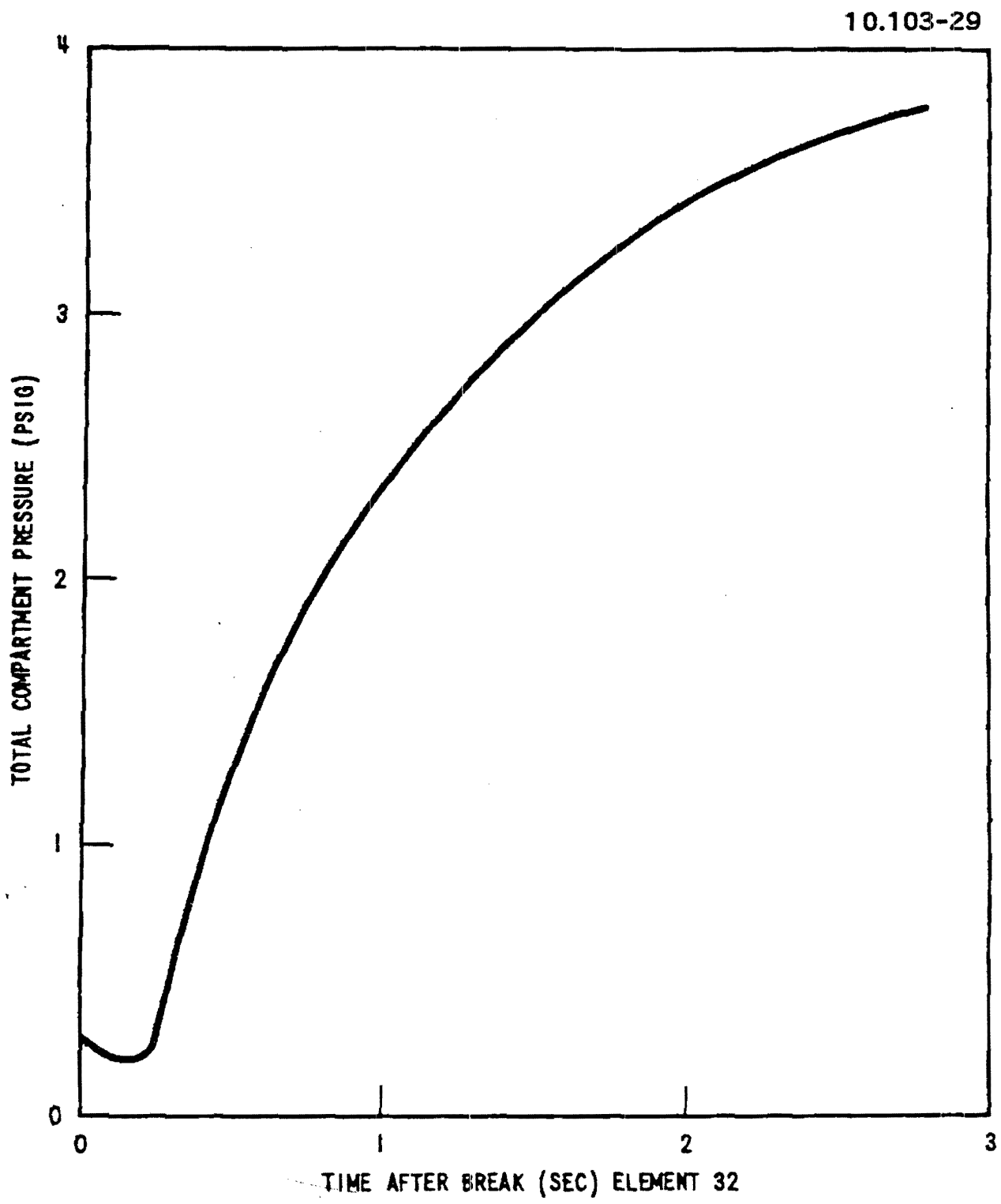

AMENDMENT 85

Figure 6.2.1-36 127 Square Inch Cold Leg Break (Reactor Cavity Analysis)

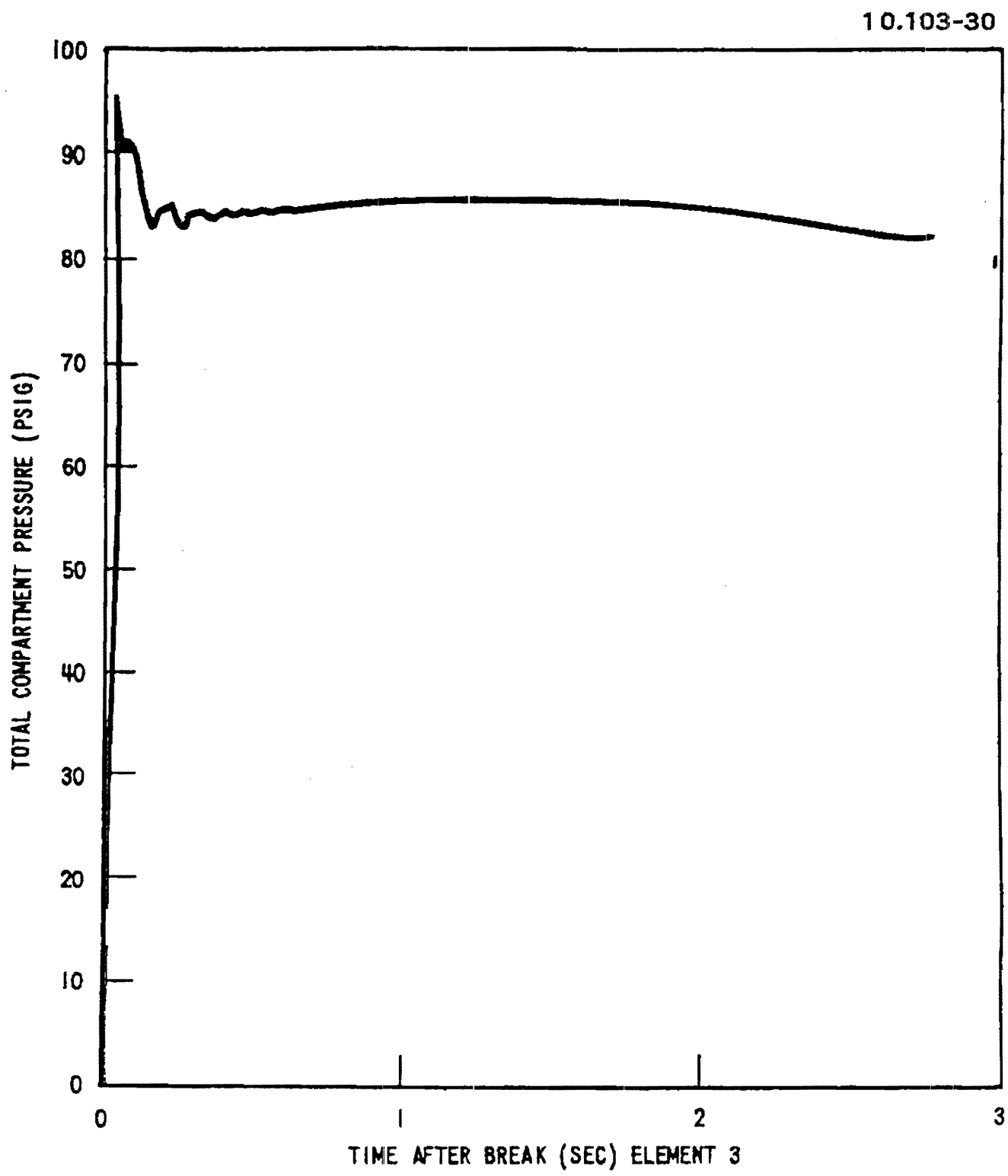

AMENDMENT 85

Figure 6.2.1-37 127 Square Inch Cold Leg Break (Reactor Cavity Analysis)

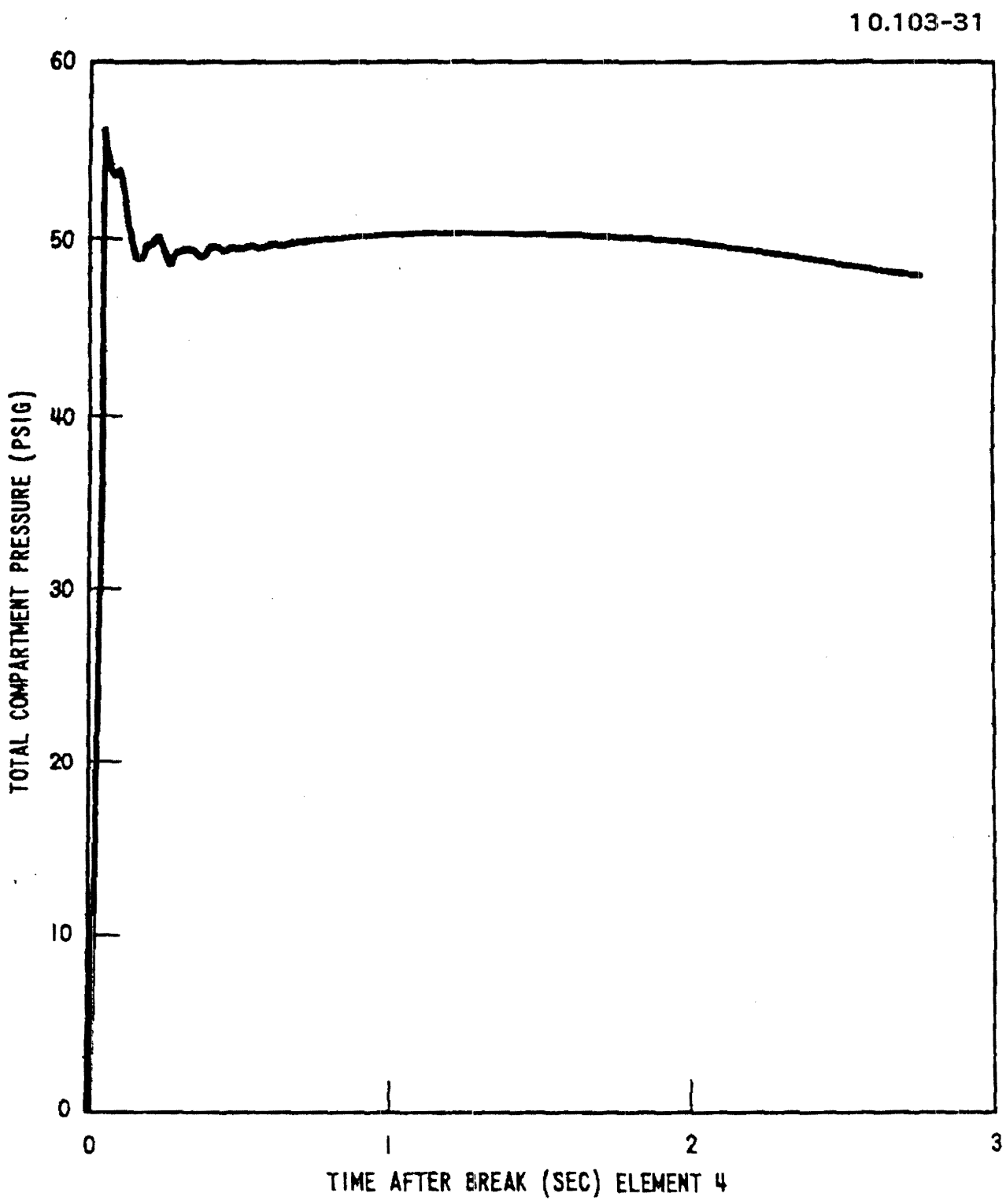

AMENDMENT 85

Figure 6.2.1-38 127 Square Inch Cold Leg Break (Reactor Cavity Analysis)

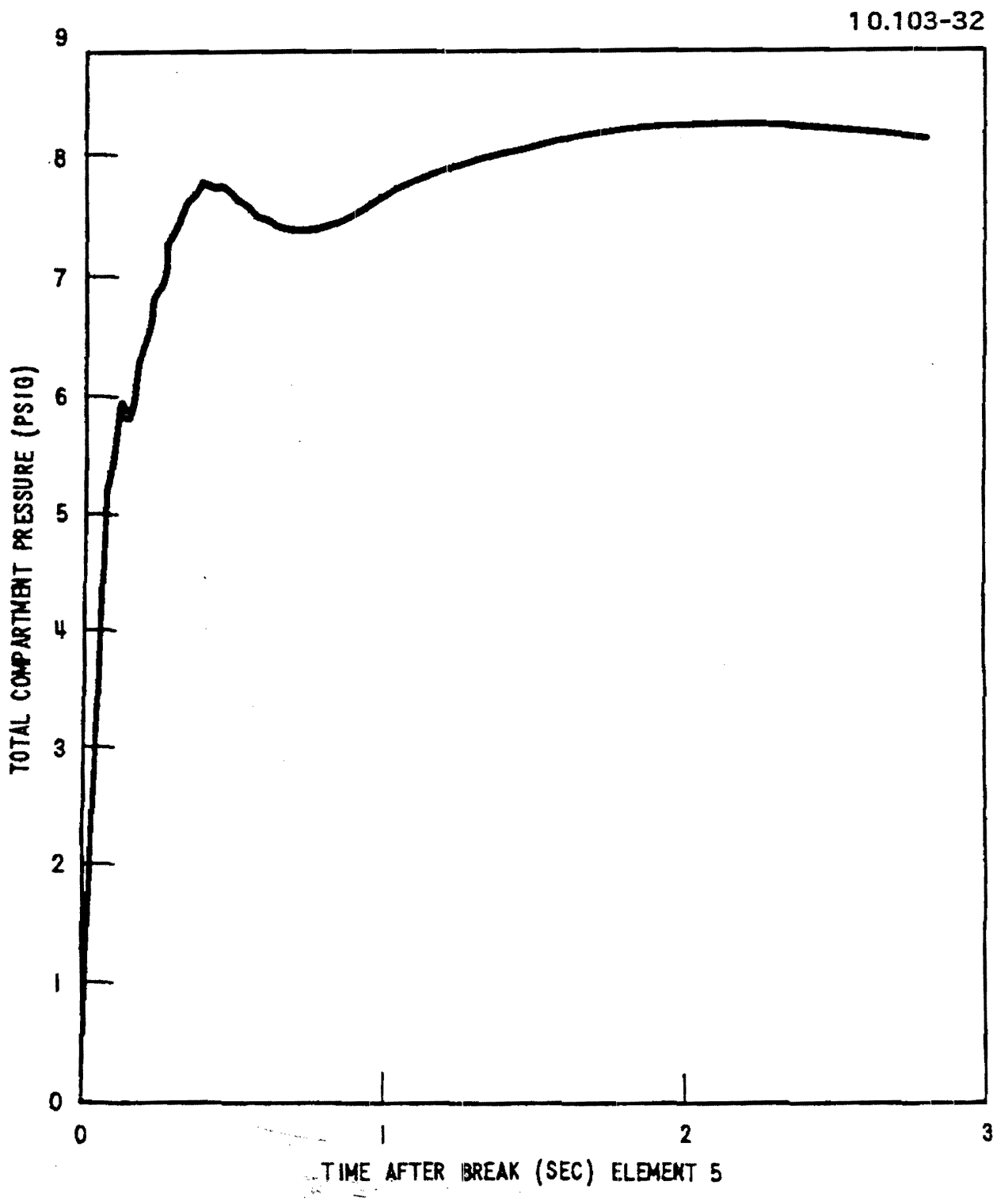

AMENDMENT 85

Figure 6.2.1-39 127 Square Inch Cold Leg Break (Reactor Cavity Analysis)

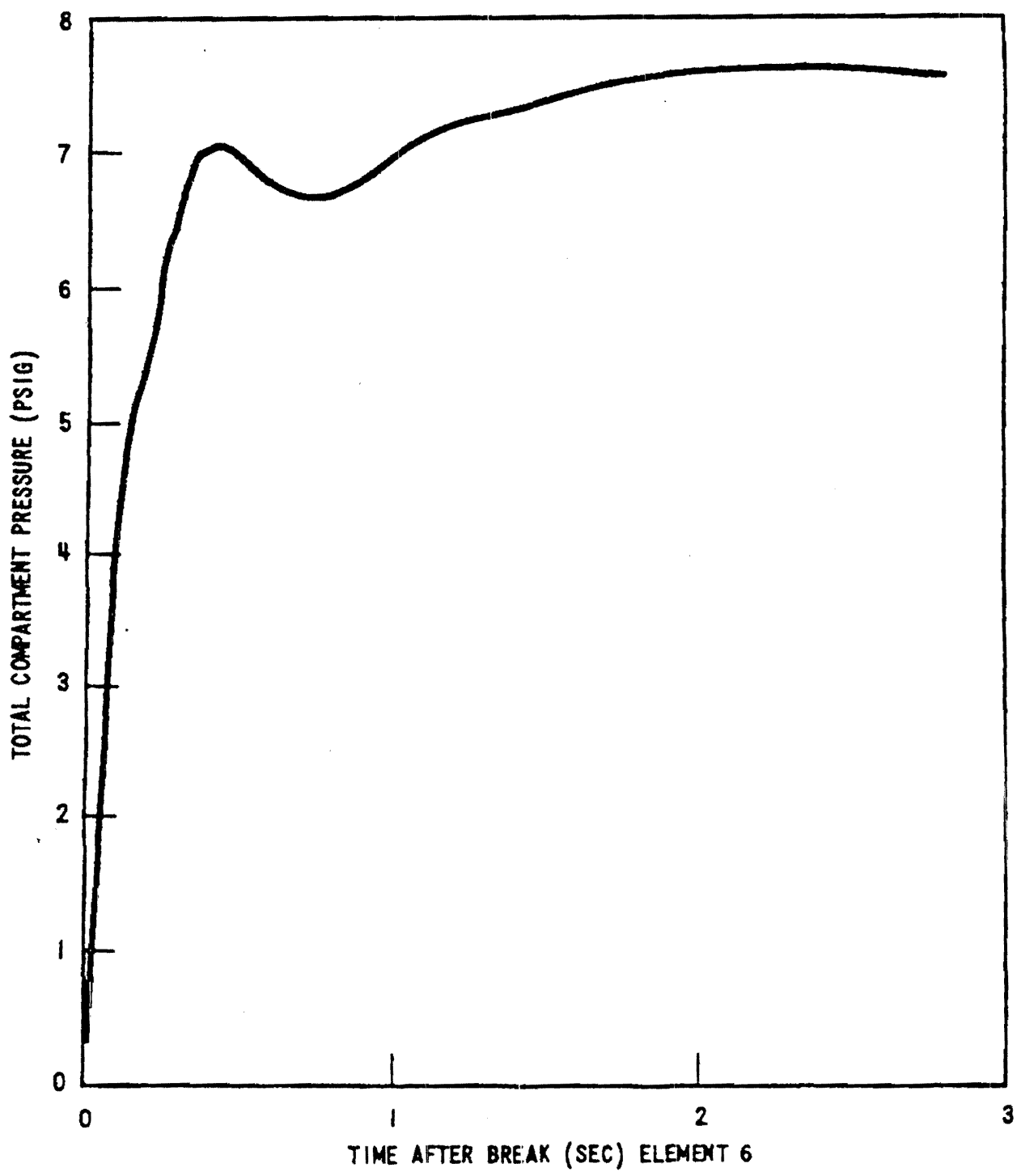

AMENDMENT 85

Figure 6.2.1-40 127 Square Inch Cold Leg Break (Reactor Cavity Analysis)

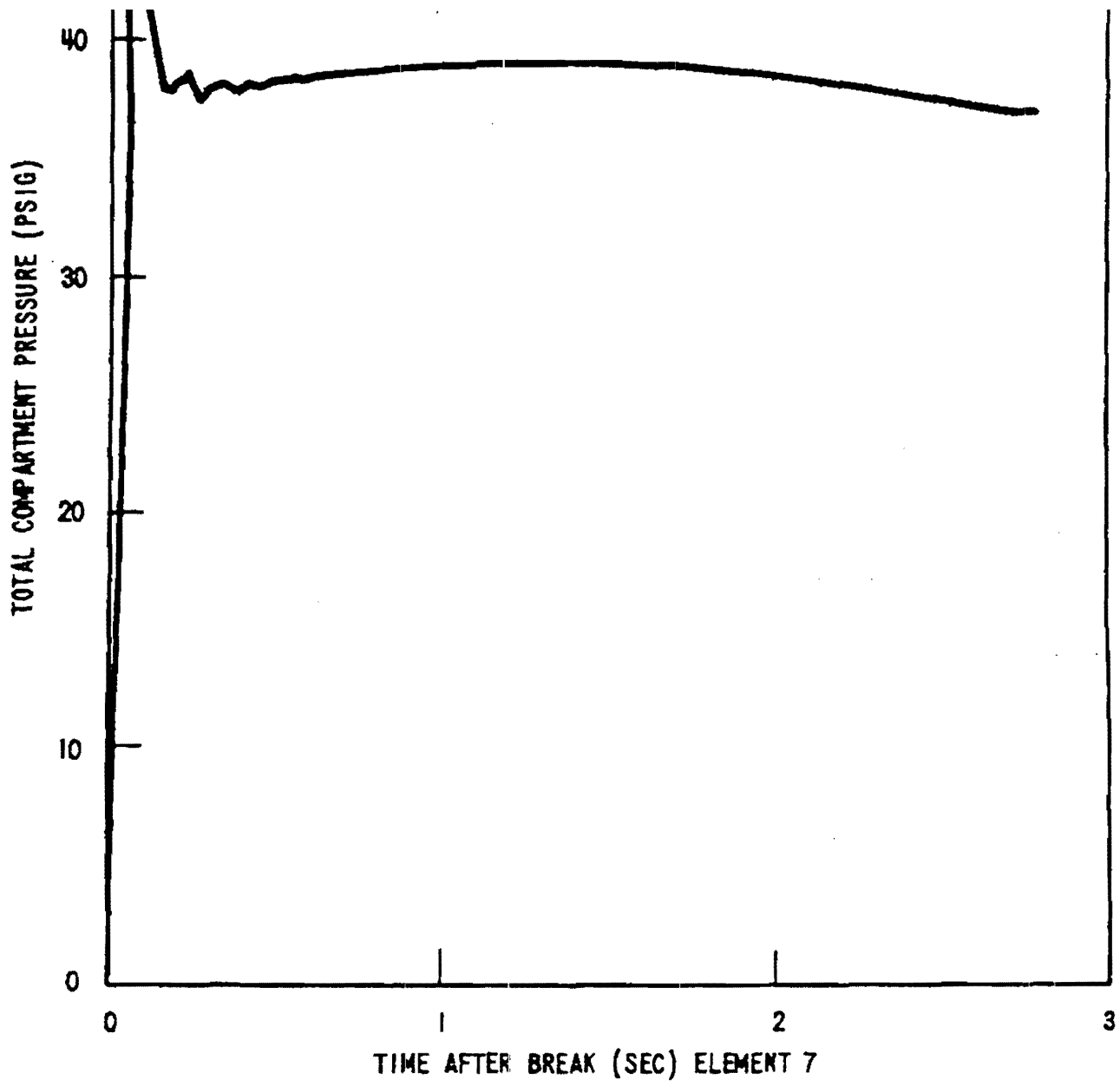

AMENDMENT 85

Figure 6.2.1-41 127 Square Inch Cold Leg Break (Reactor Cavity Analysis)

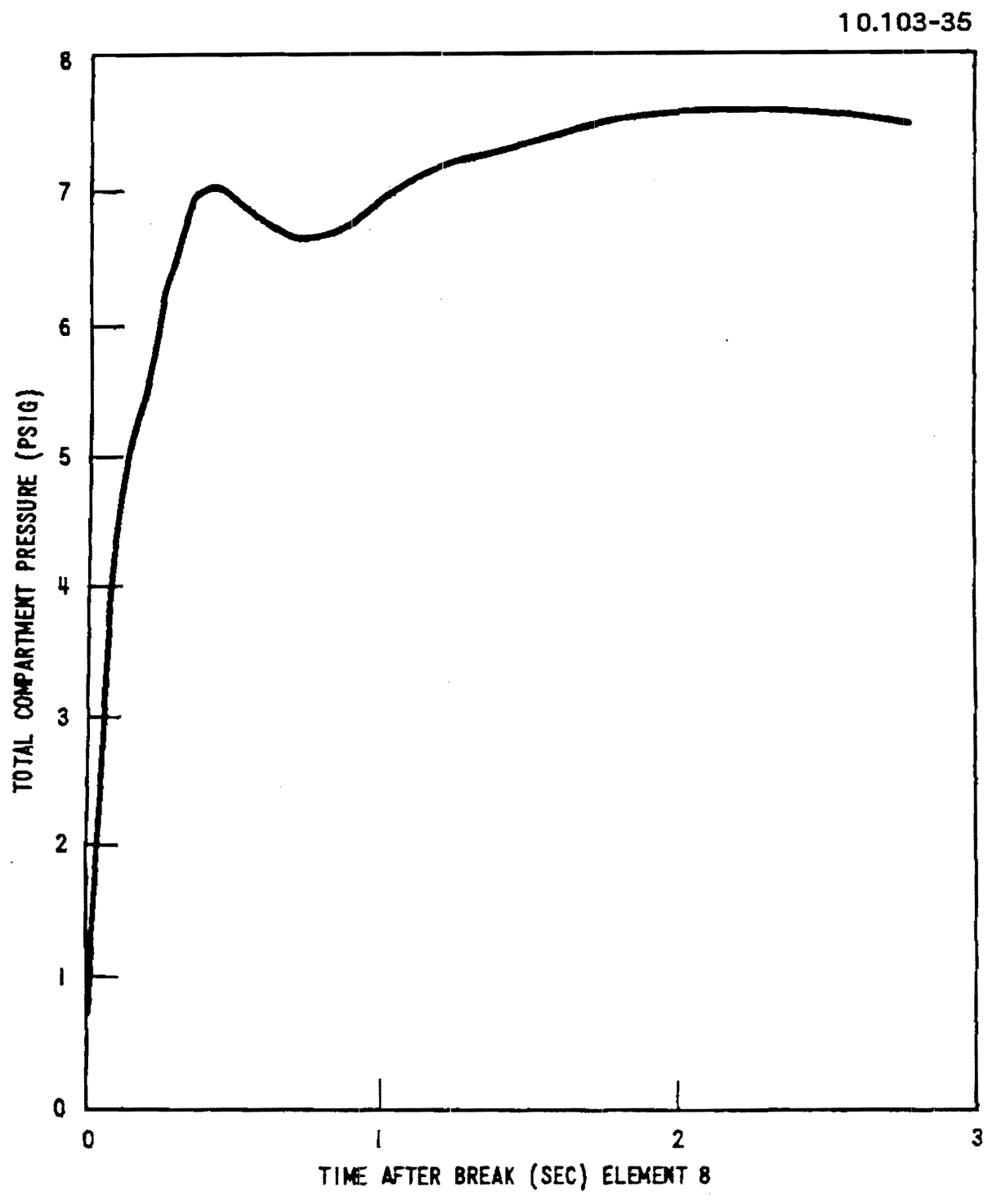

AMENDMENT 85

Figure 6.2.1-42 127 Square Inch Cold Leg Break (Reactor Cavity Analysis)

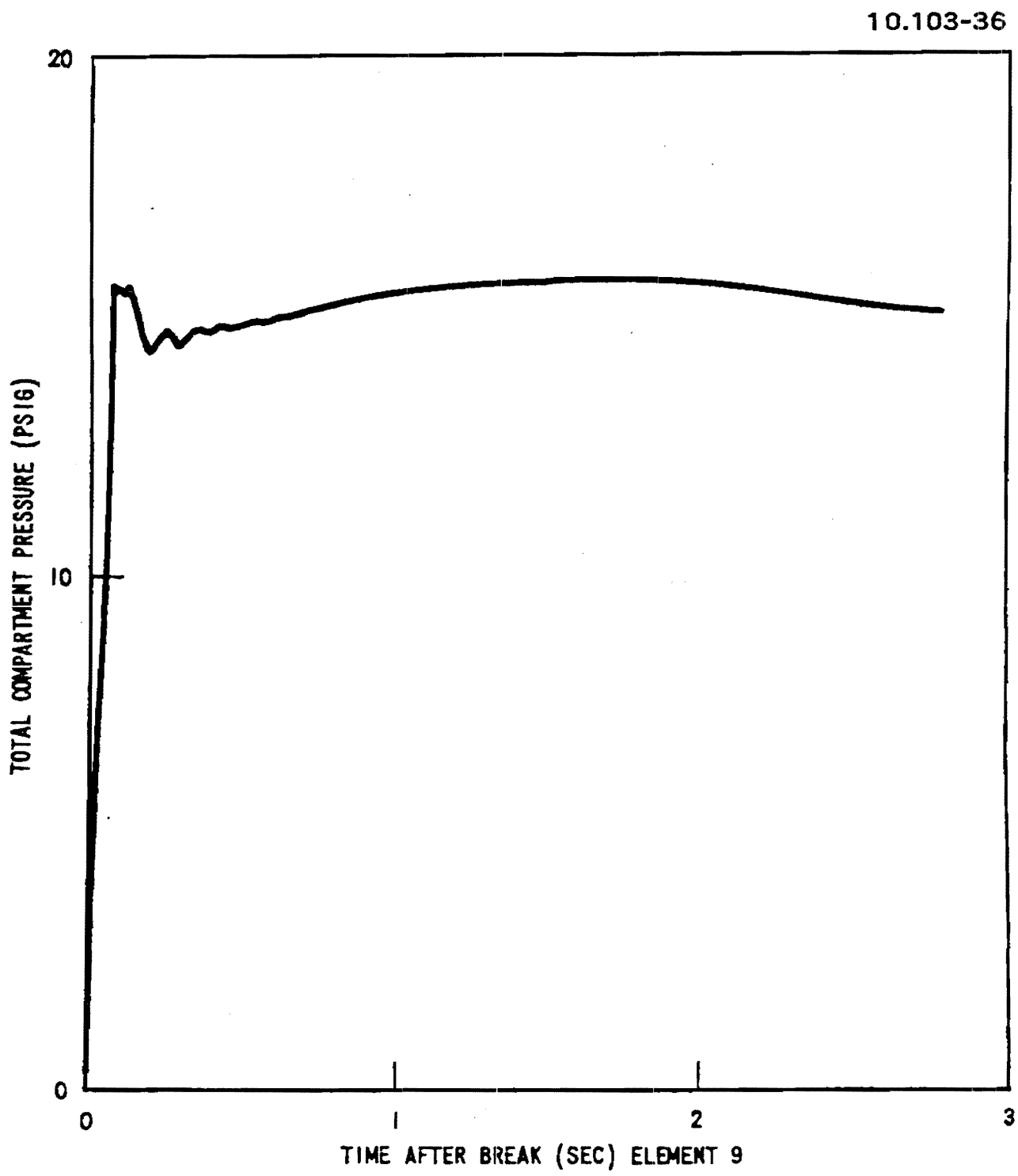

AMENDMENT 85

Figure 6.2.1-43 127 Square Inch Cold Leg Break (Reactor Cavity Analysis)

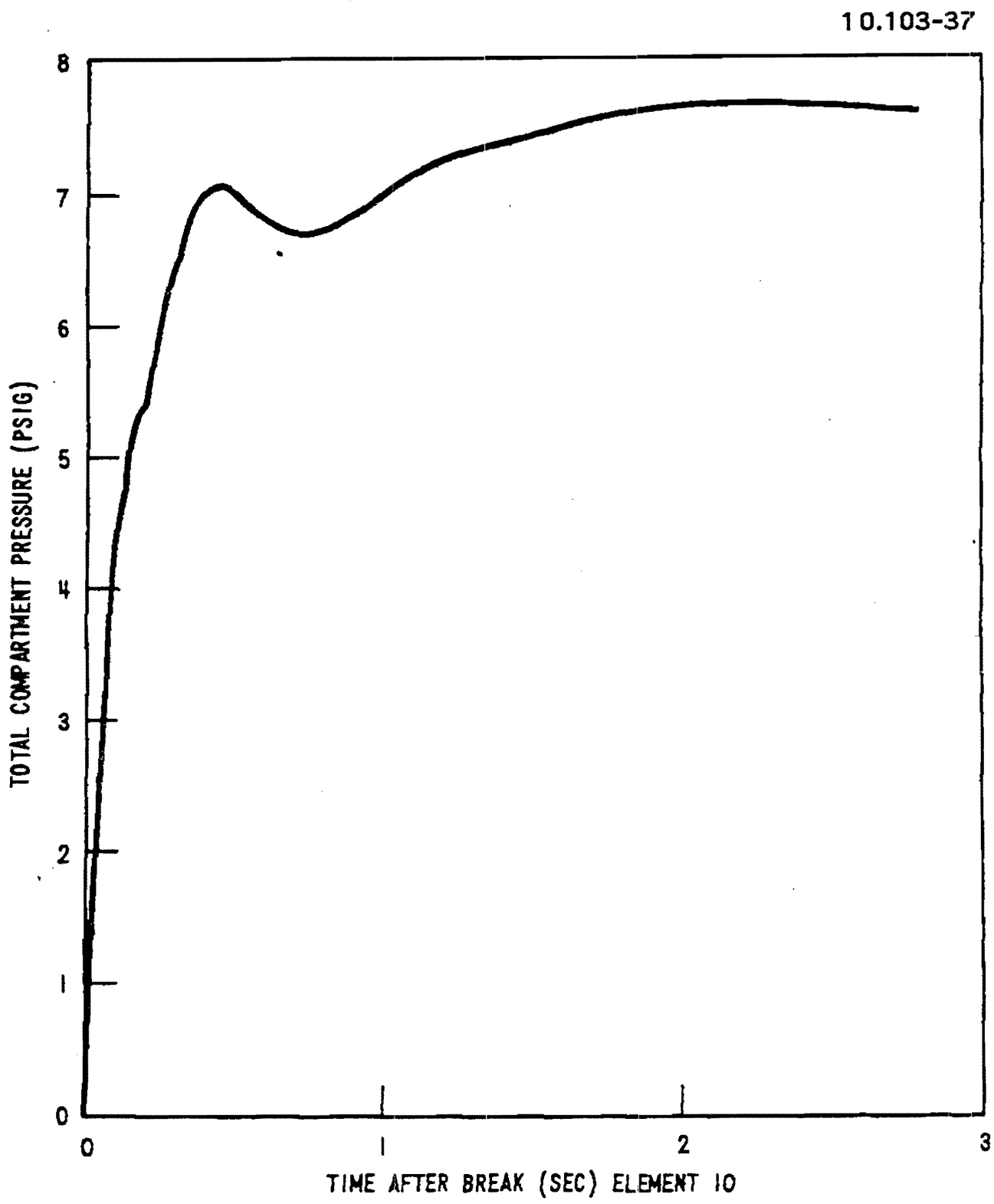

AMENDMENT 85

Figure 6.2.1-44 127 Square Inch Cold Leg Break (Reactor Cavity Analysis)

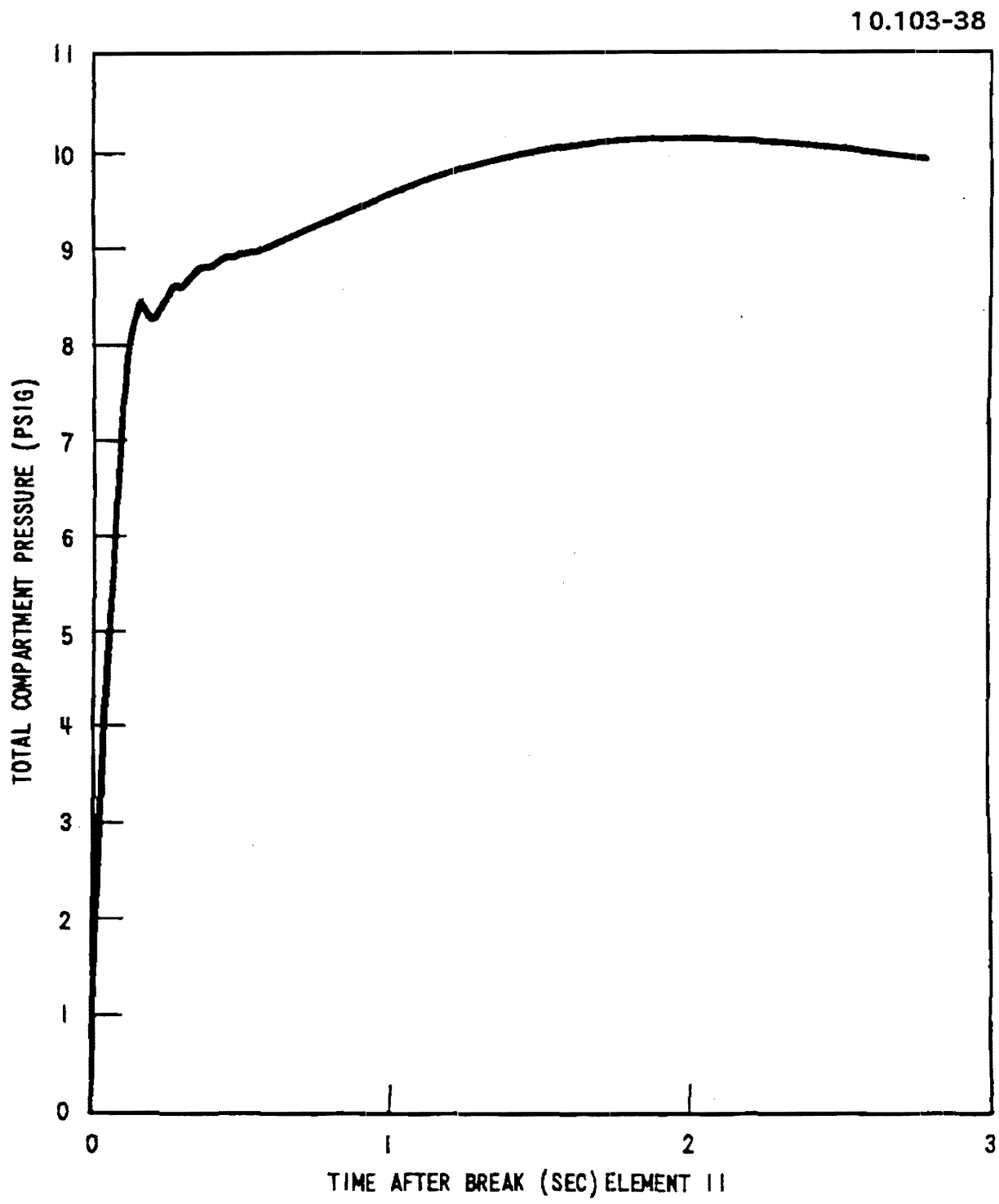

AMENDMENT 85

Figure 6.2.1-45 127 Square Inch Cold Leg Break (Reactor Cavity Analysis)

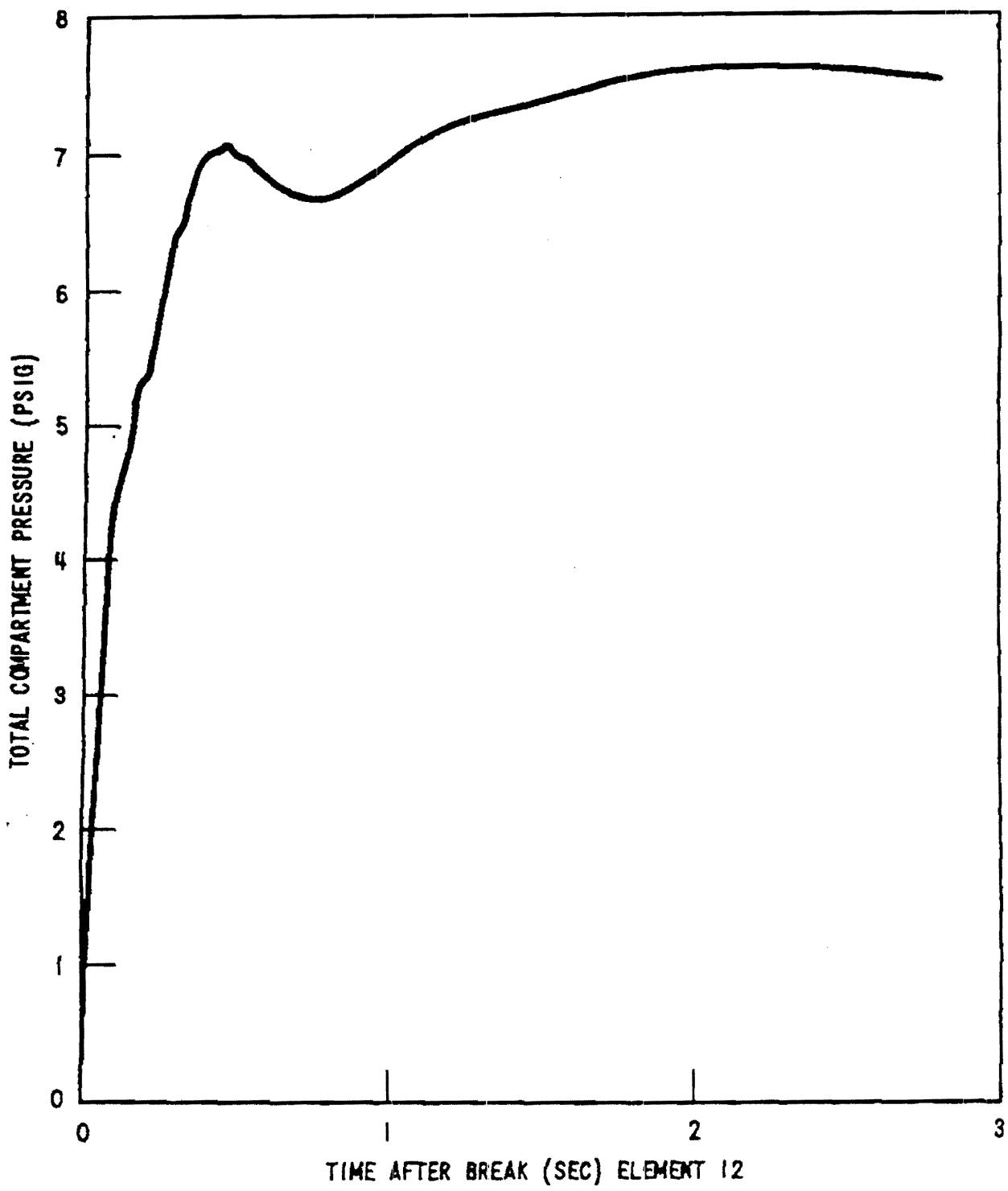

AMENDMENT 85

Figure 6.2.1-46 127 Square Inch Cold Leg Break (Reactor Cavity Analysis)

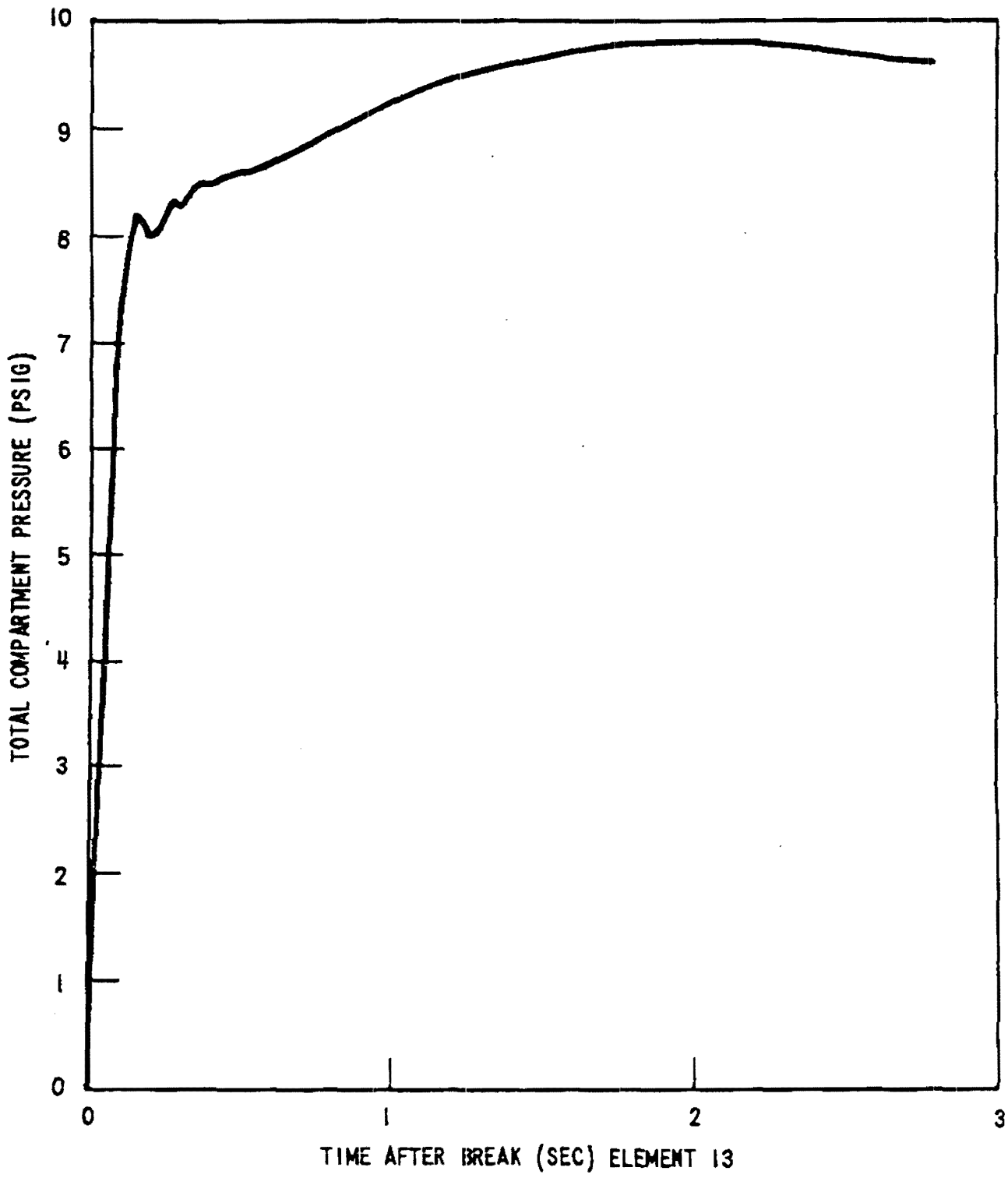

AMENDMENT 85

Figure 6.2.1-47 127 Square Inch Cold Leg Break (Reactor Cavity Analysis)

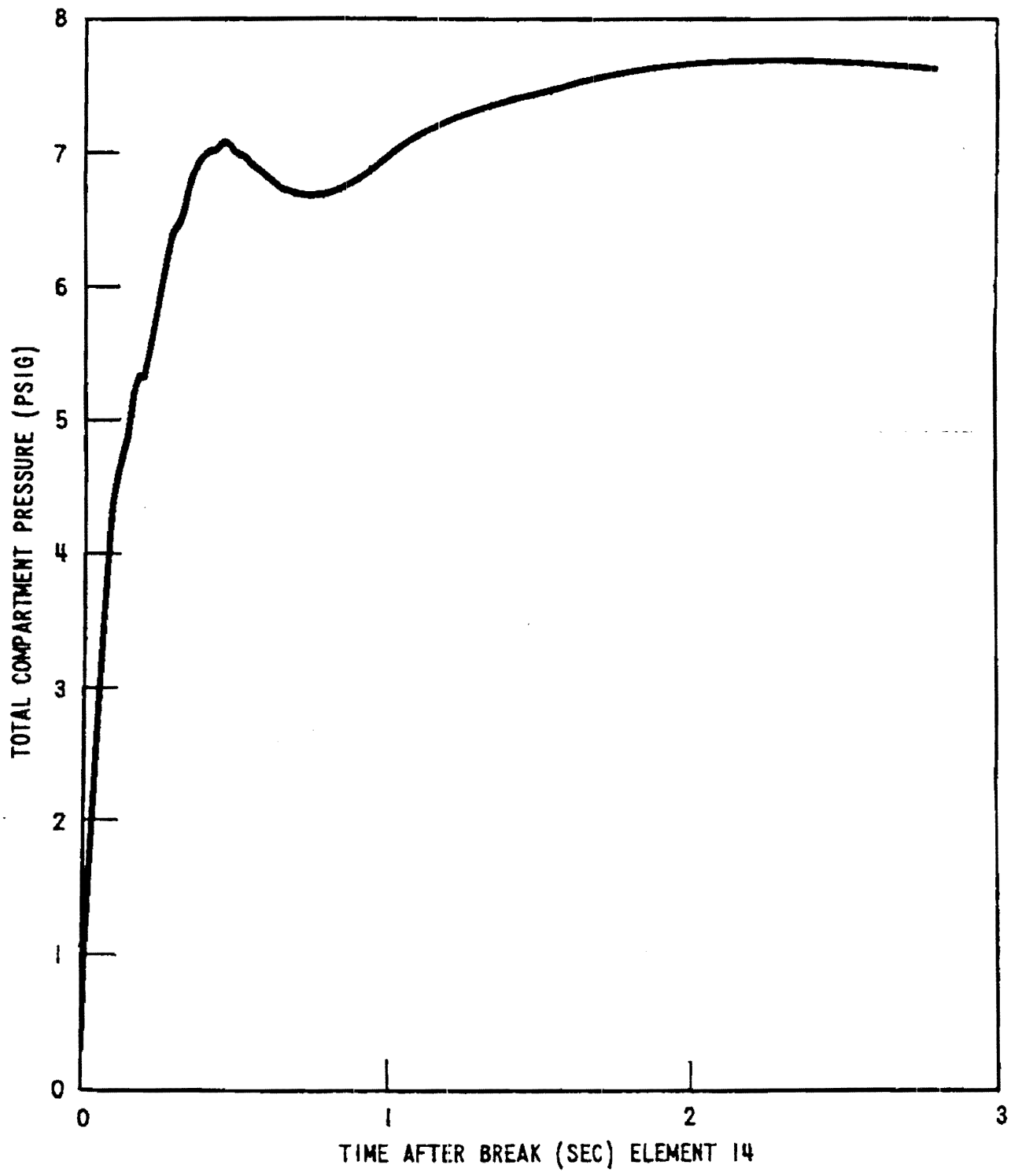

AMENDMENT 85

Figure 6.2.1-48 127 Square Inch Cold Leg Break (Reactor Cavity Analysis)

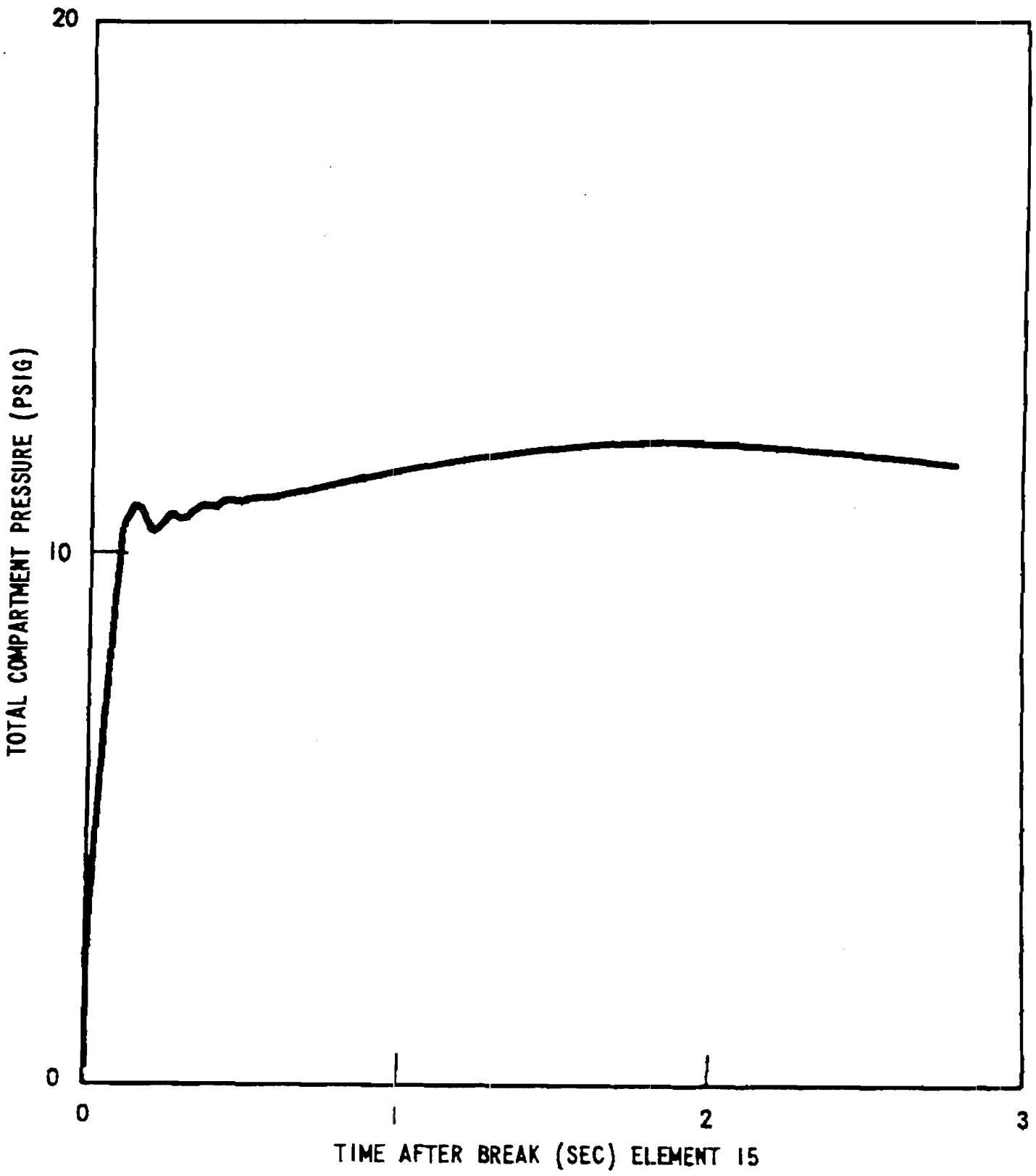

AMENDMENT 85

Figure 6.2.1-49 127 Square Inch Cold Leg Break (Reactor Cavity Analysis)

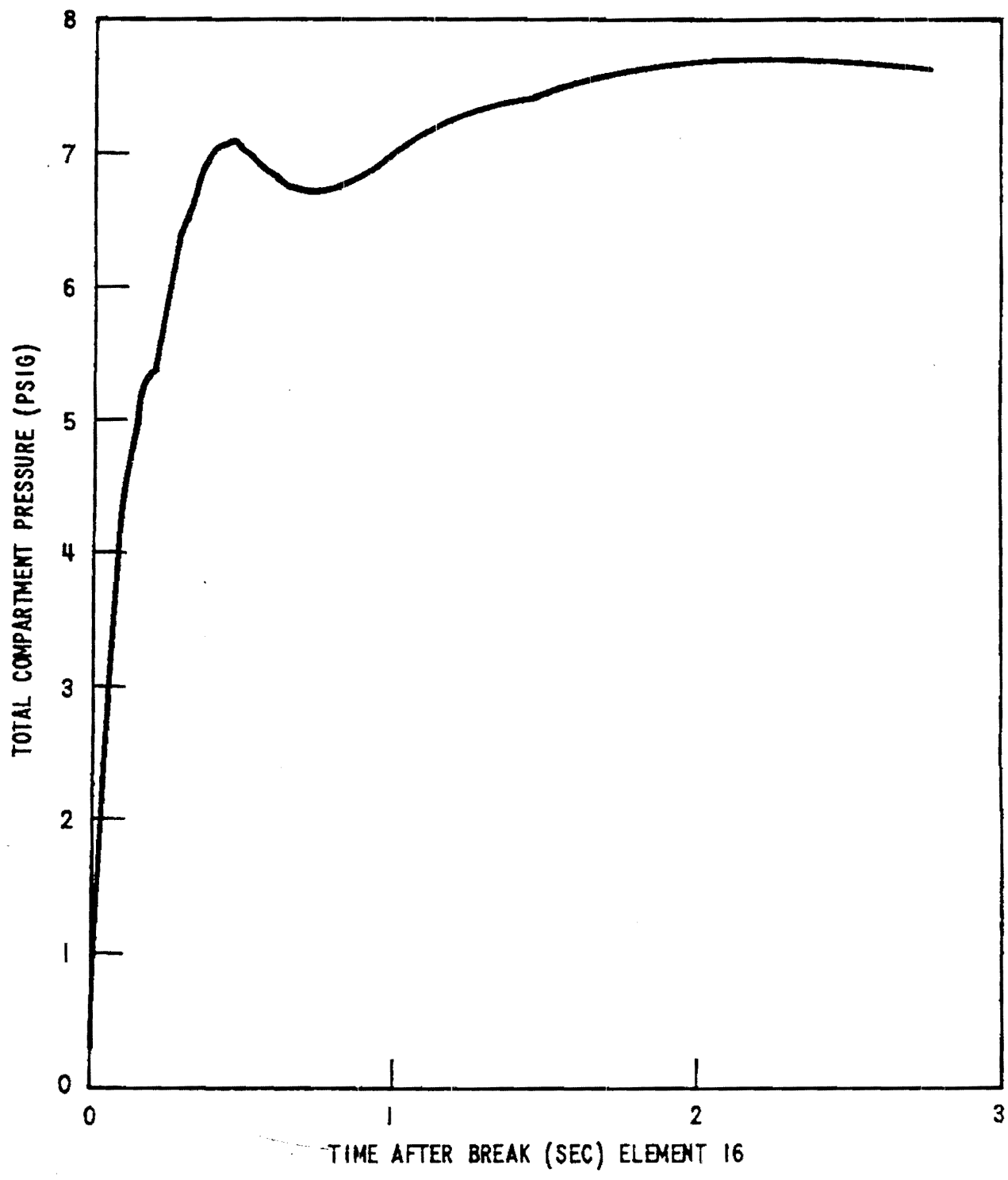

AMENDMENT 85

Figure 6.2.1-50 127 Square Inch Cold Leg Break (Reactor Cavity Analysis)

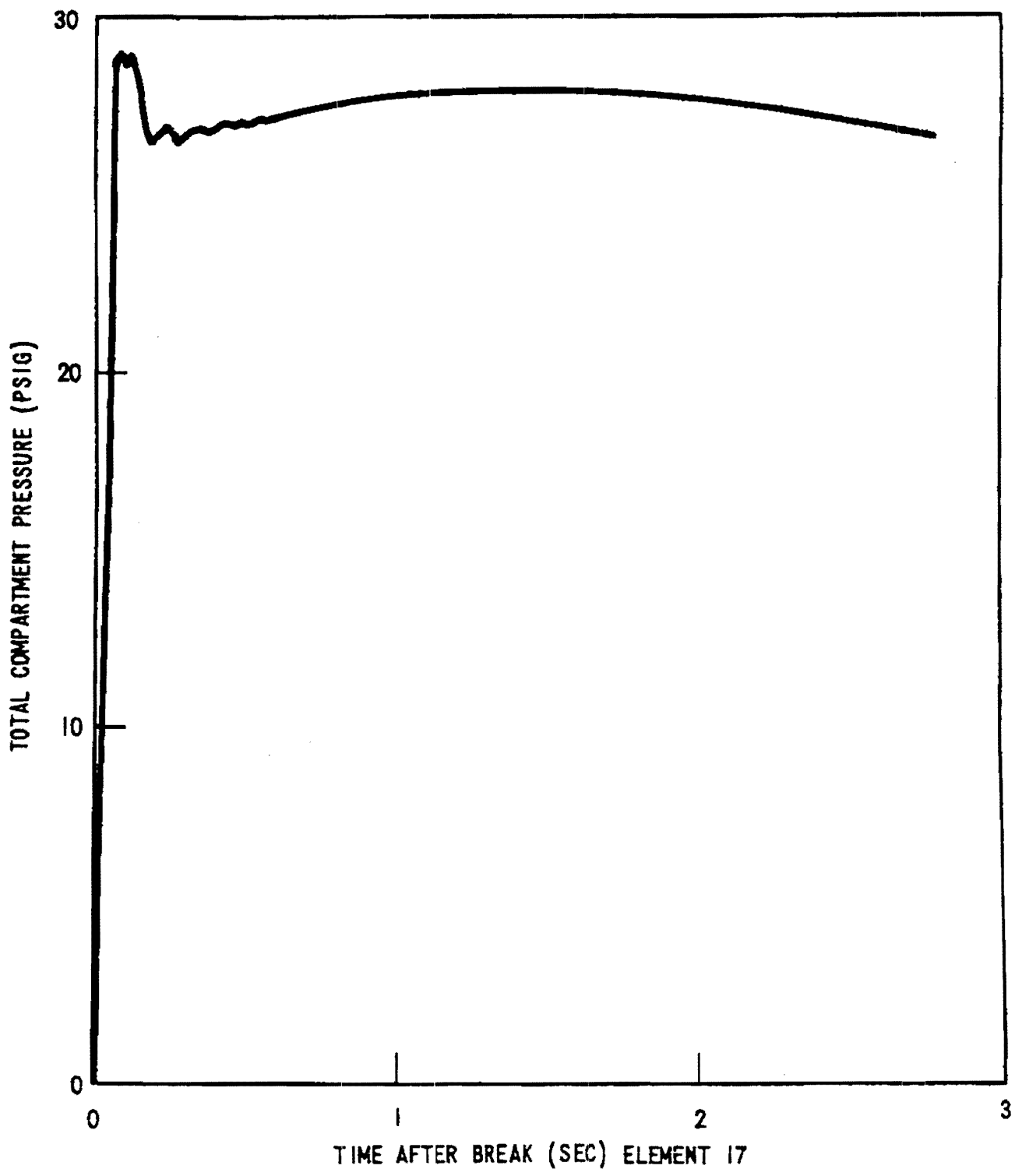

AMENDMENT 85

Figure 6.2.1-51 127 Square Inch Cold Leg Break (Reactor Cavity Analysis)

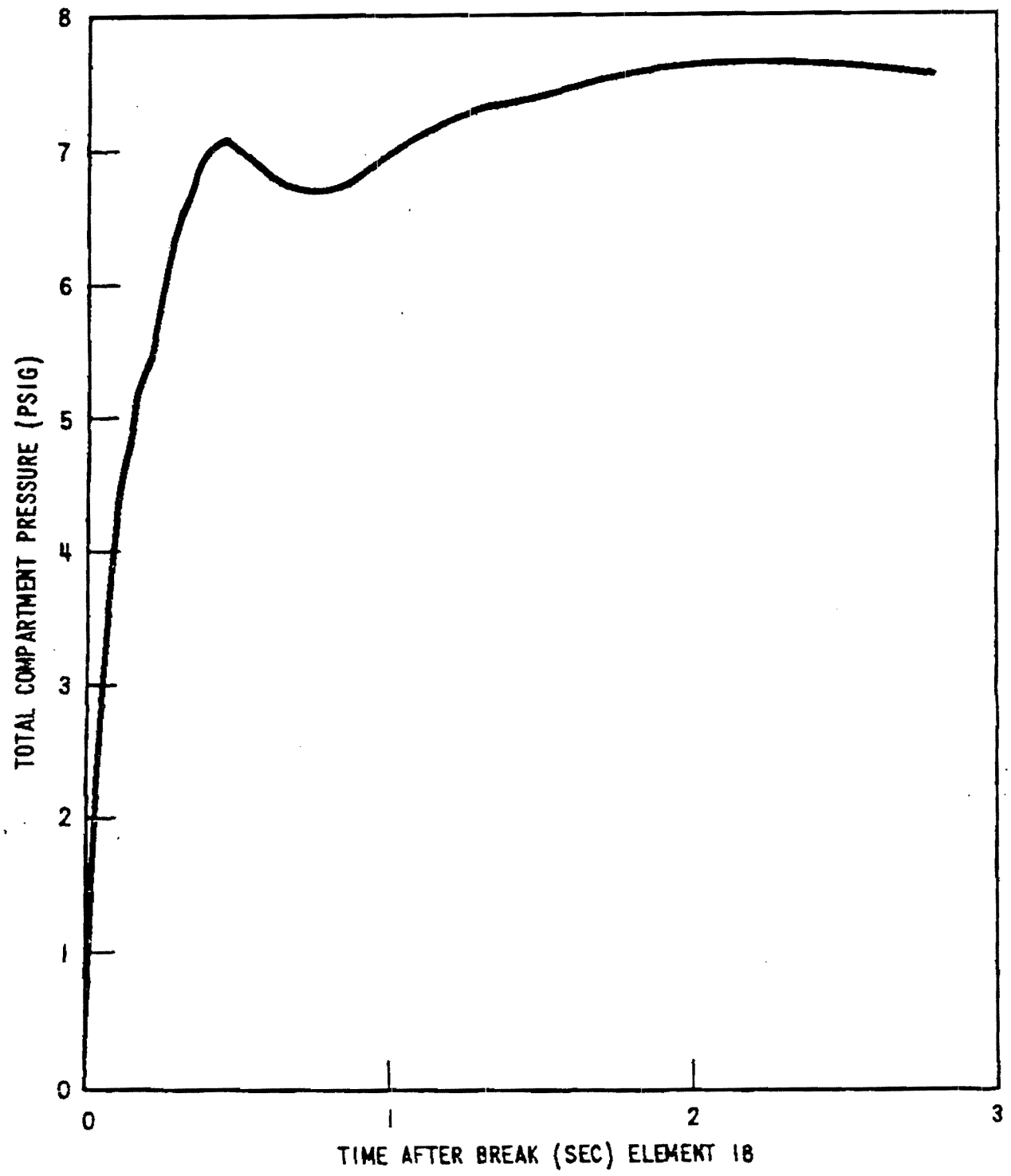

AMENDMENT 85

Figure 6.2.1-52 127 Square Inch Cold Leg Break (Reactor Cavity Analysis)

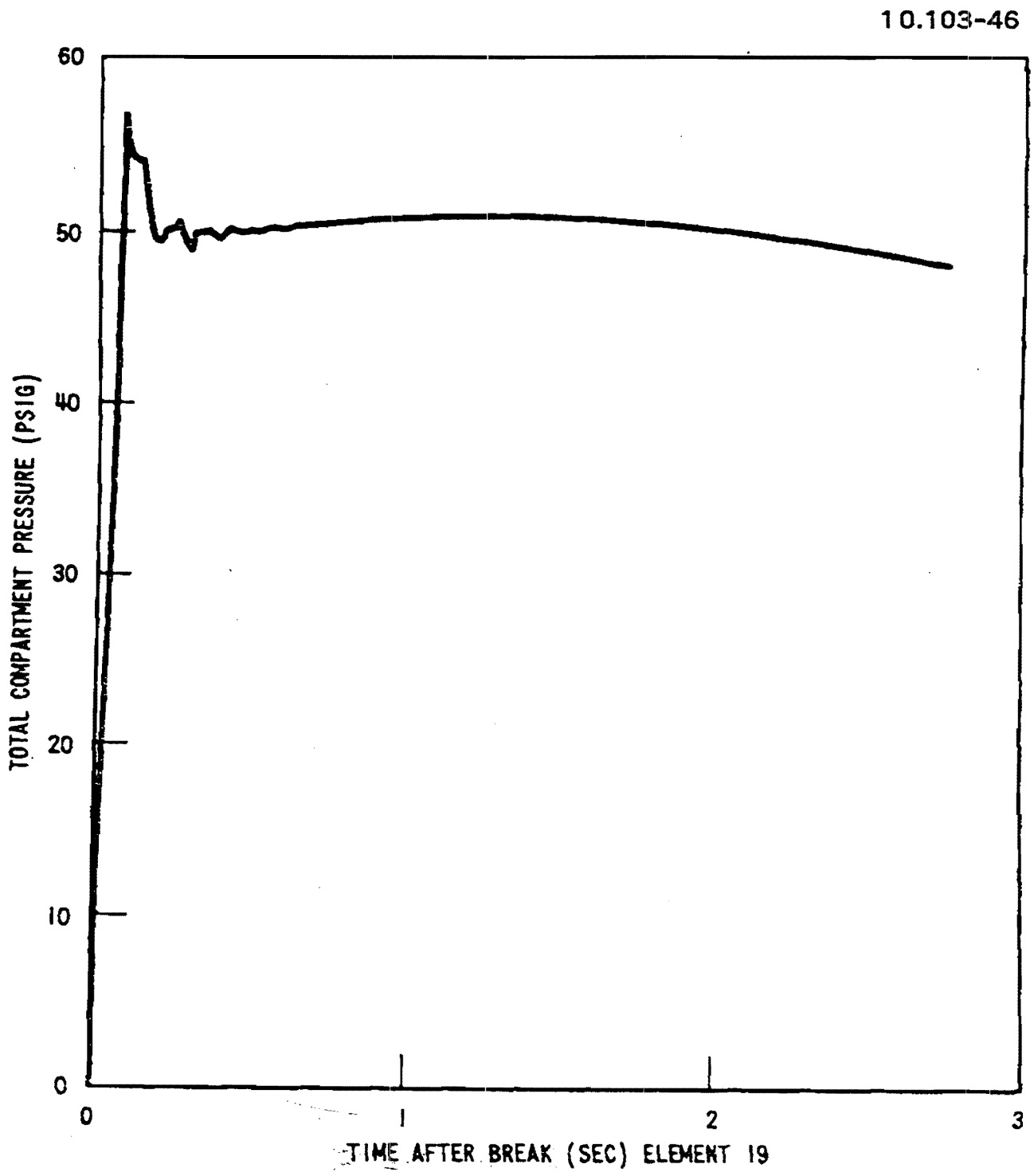

AMENDMENT 85

Figure 6.2.1-53 127 Square Inch Cold Leg Break (Reactor Cavity Analysis)

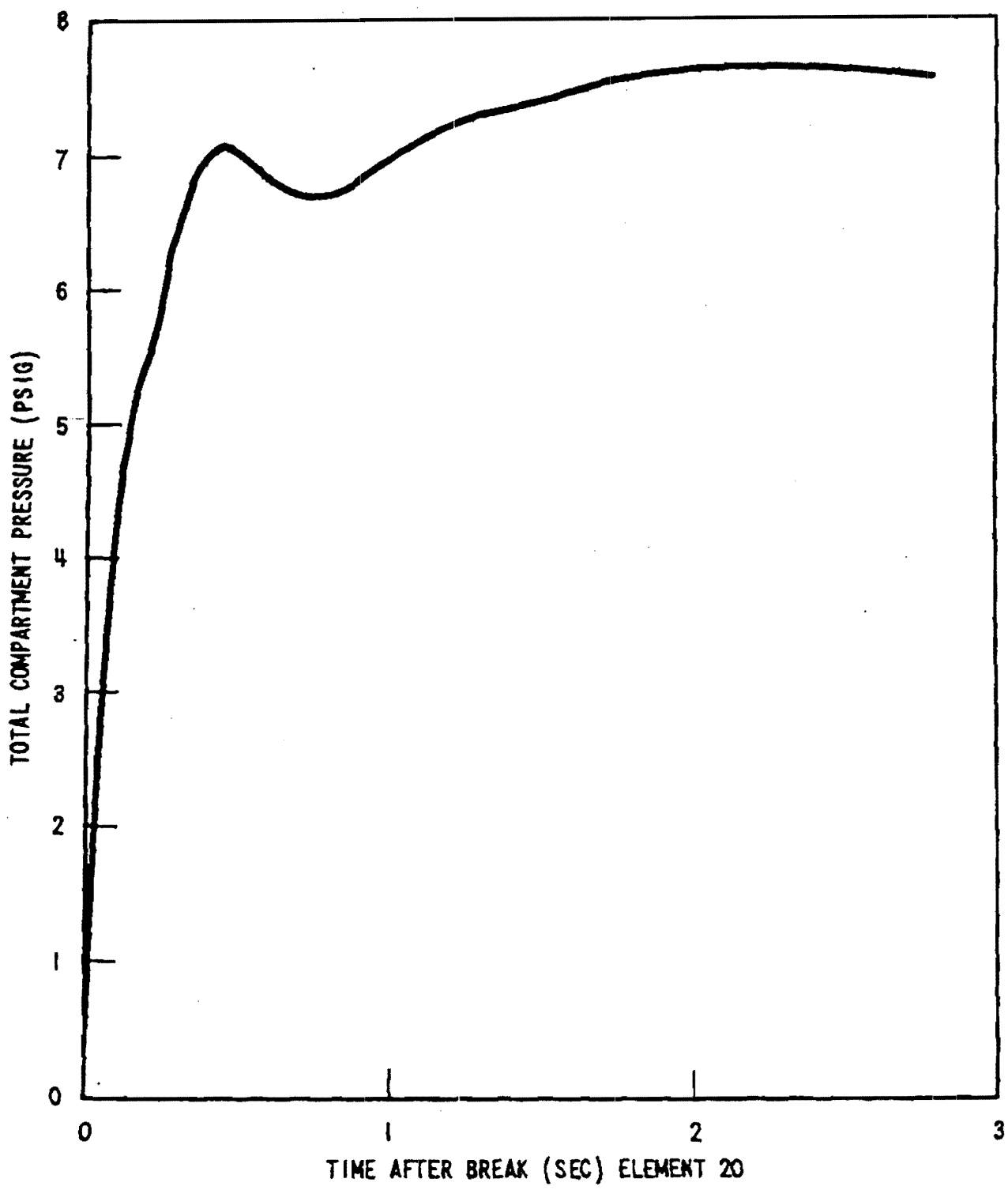

AMENDMENT 85

Figure 6.2.1-54 127 Square Inch Cold Leg Break (Reactor Cavity AnalysIS)

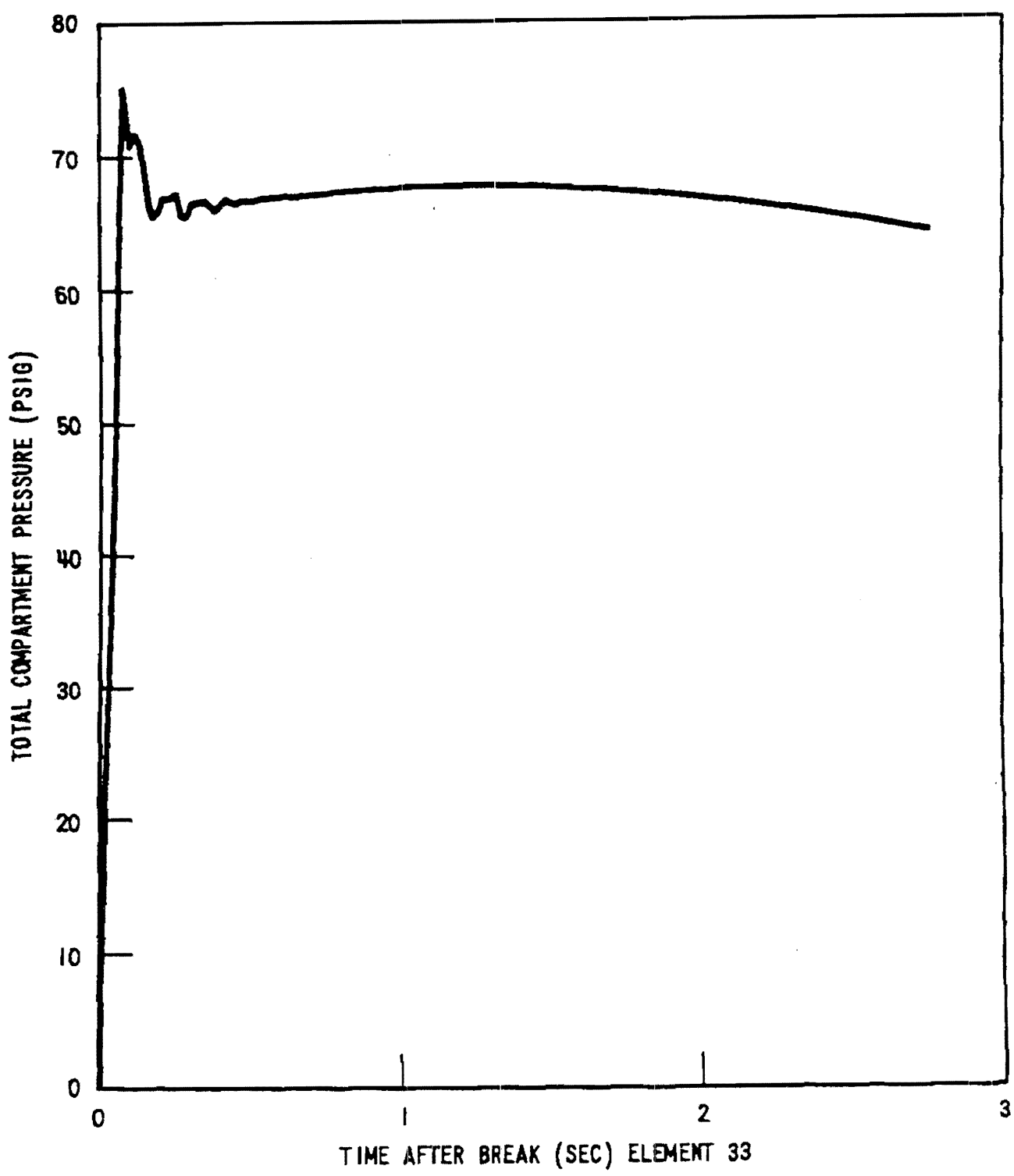

AMENDMENT 85

Figure 6.2.1-55 127 Square Inch Cold Leg Break (Reactor Cavity Analysis)

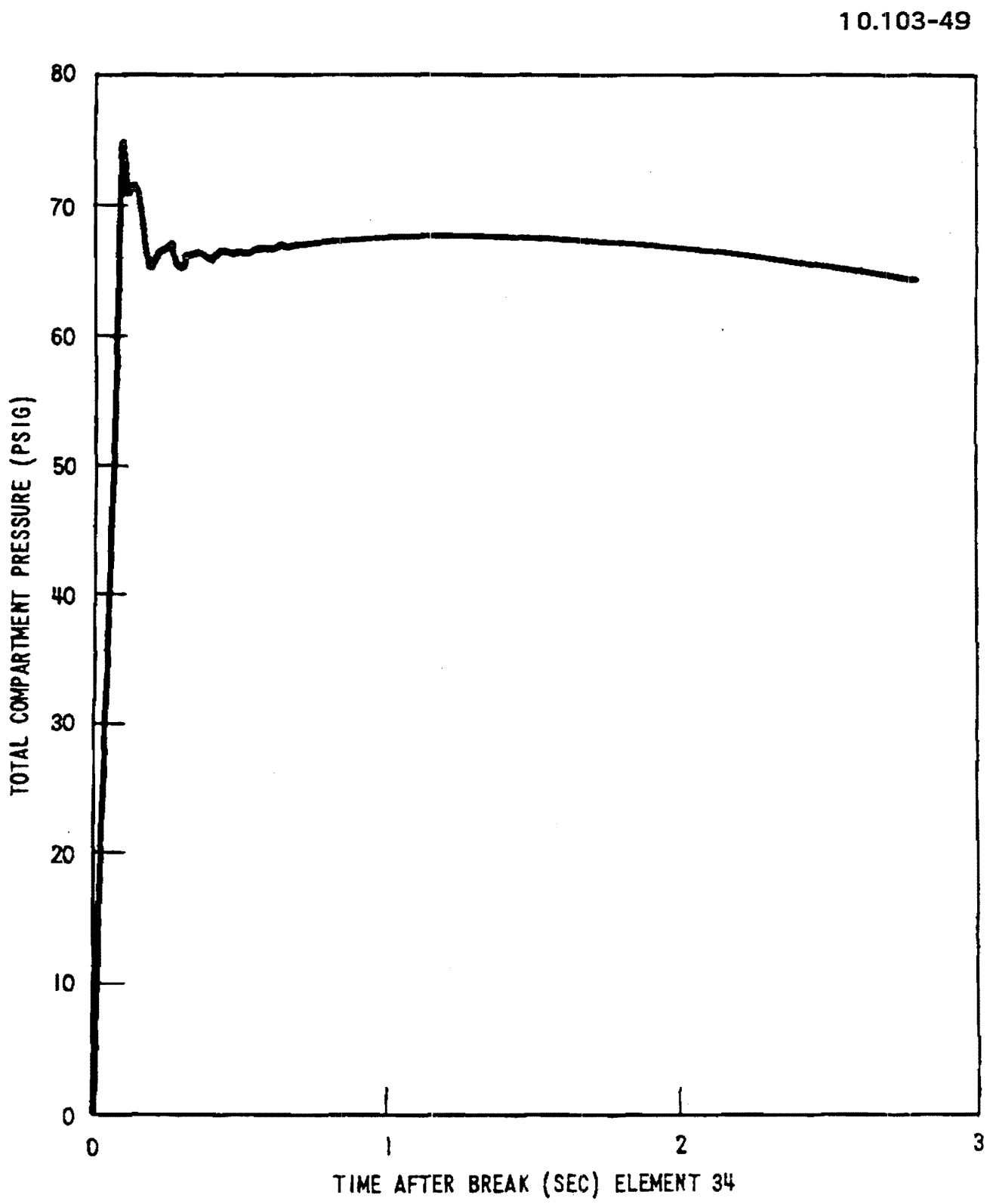

AMENDMENT 85

Figure 6.2.1-56 127 Square Inch Cold Leg Break (Reactor Cavity Analysis)

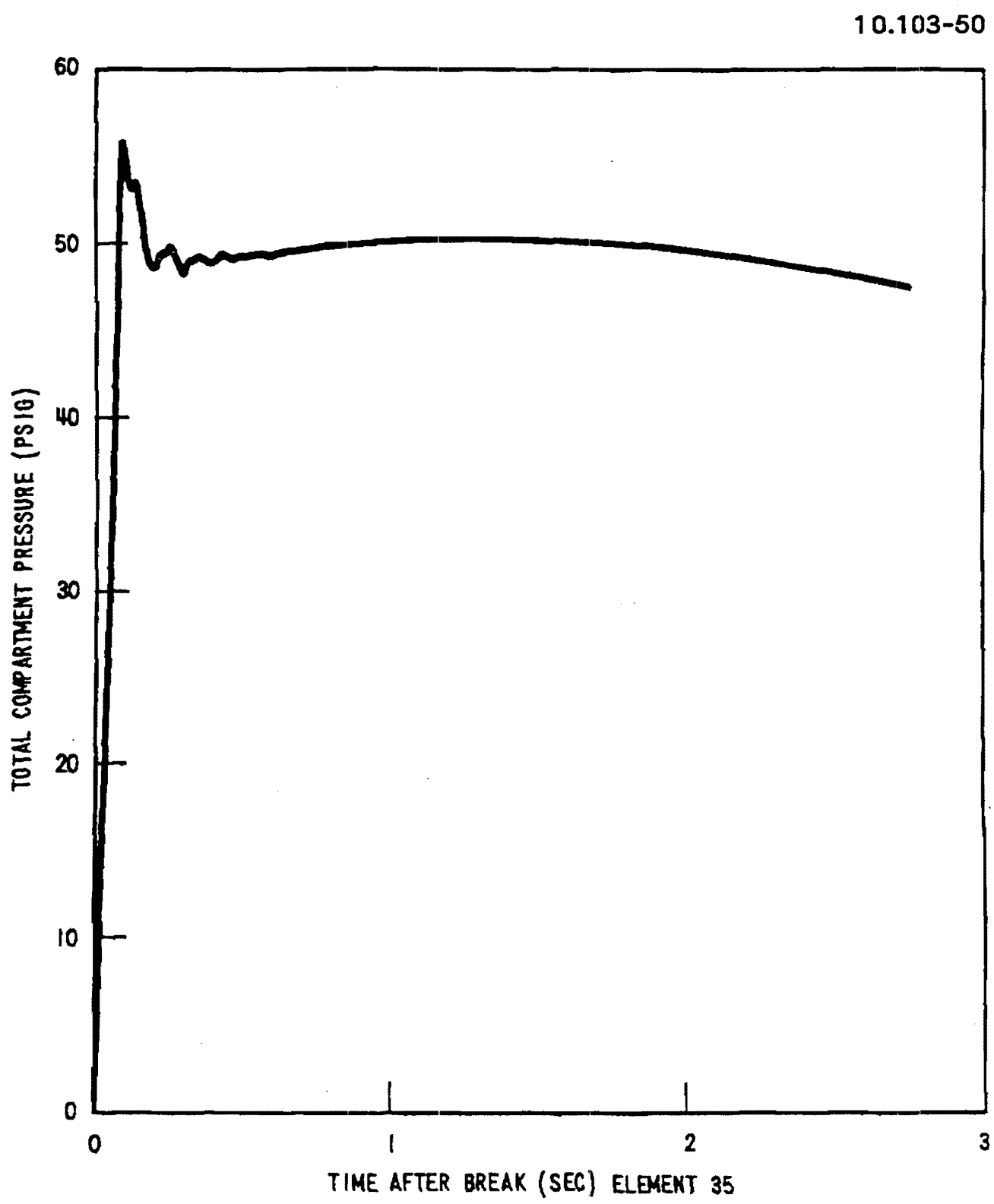

AMENDMENT 85

Figure 6.2.1-57 127 Square Inch Cold Leg Break (Reactor Cavity Analysis)

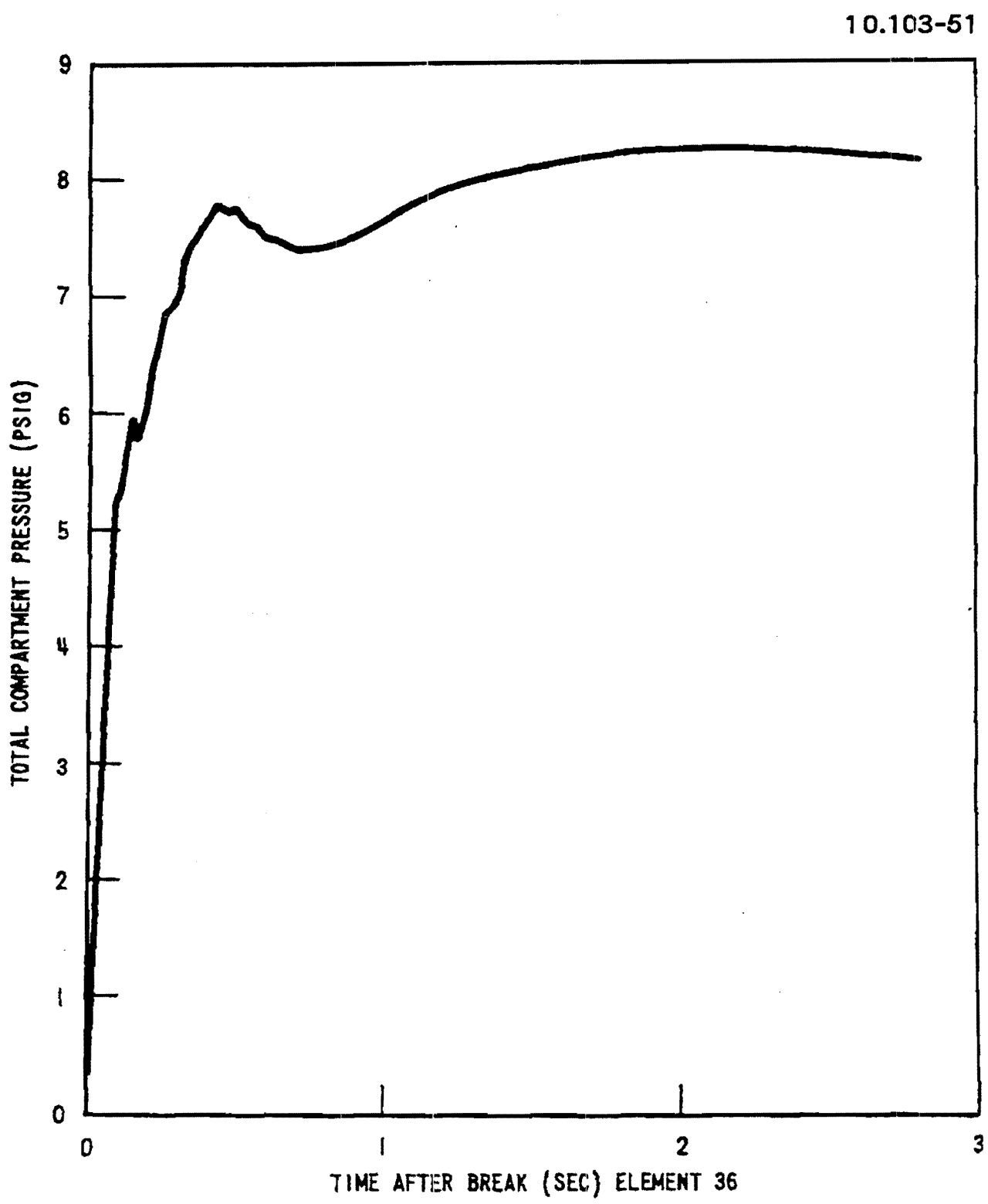

AMENDMENT 85

Figure 6.2.1-58 127 Square Inch Cold Leg Break (Reactor Cavity Analysis)

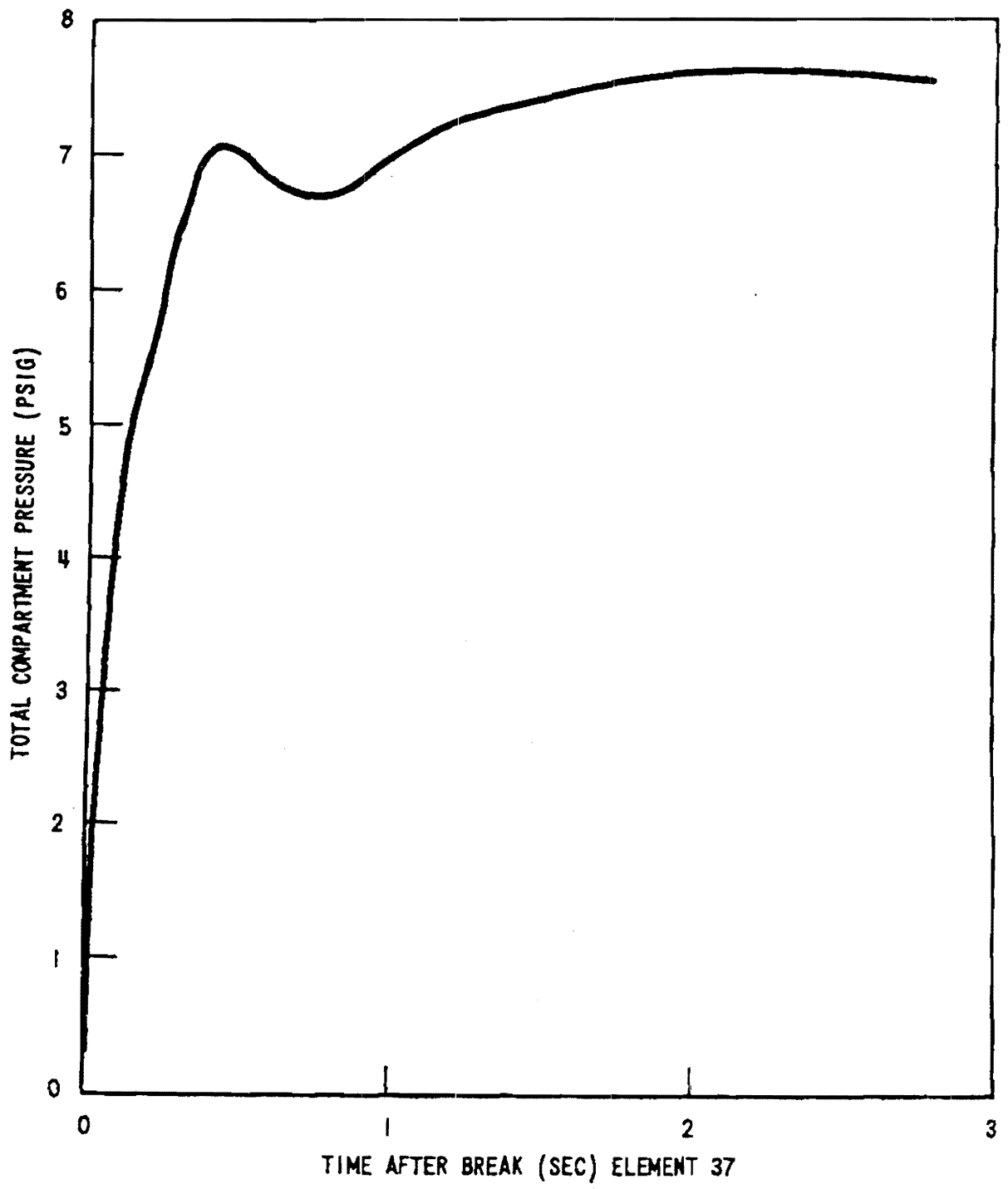

AMENDMENT 85

Figure 6.2.1-59 127 Square Inch Cold Leg Break (Reactor Cavity Analysis)

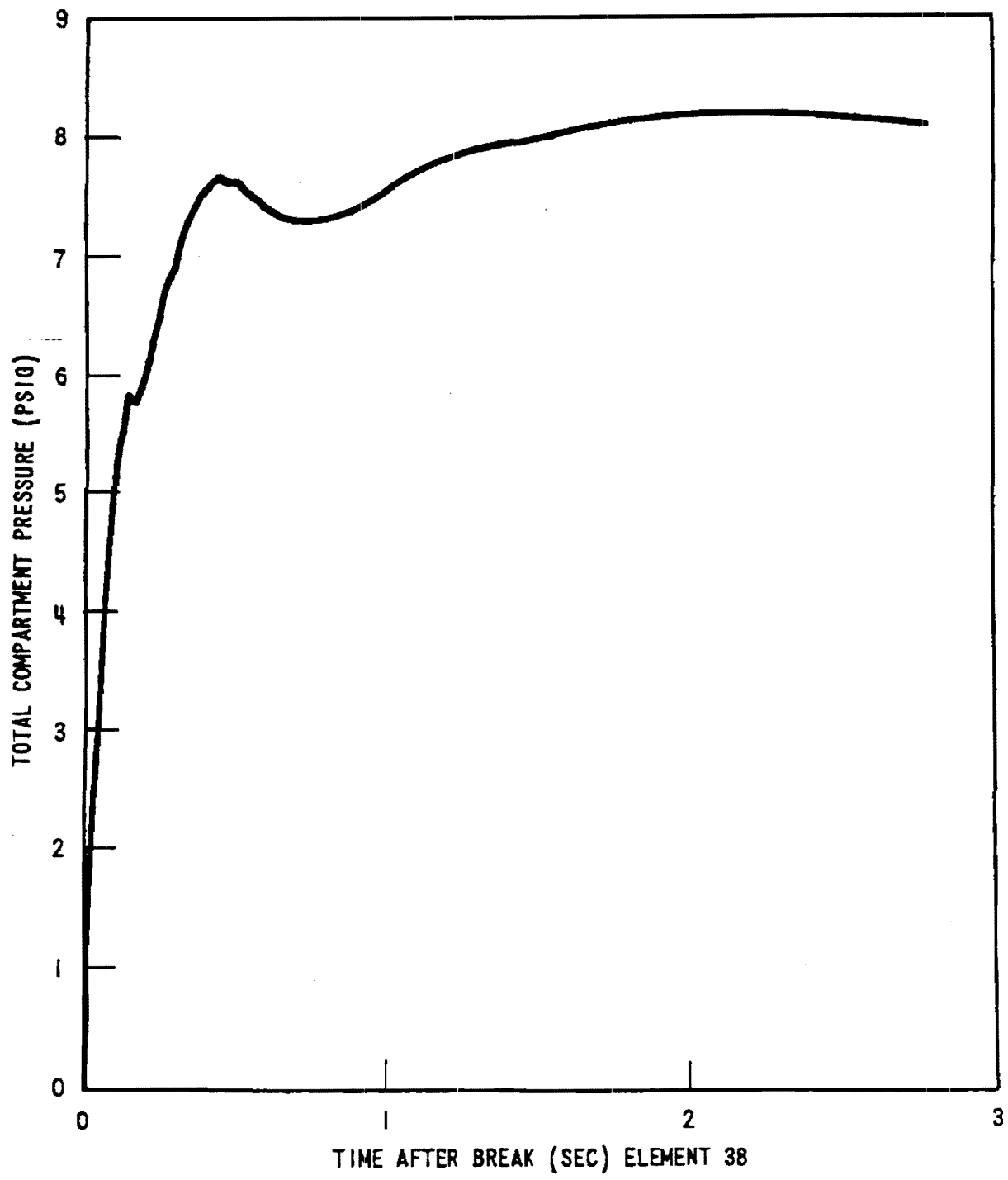

AMENDMENT 85

Figure 6.2.1-60 127 Square Inch Cold Leg Break (Reactor Cavity Analysis)

THIS PAGE INTENTIONALLY BLANK

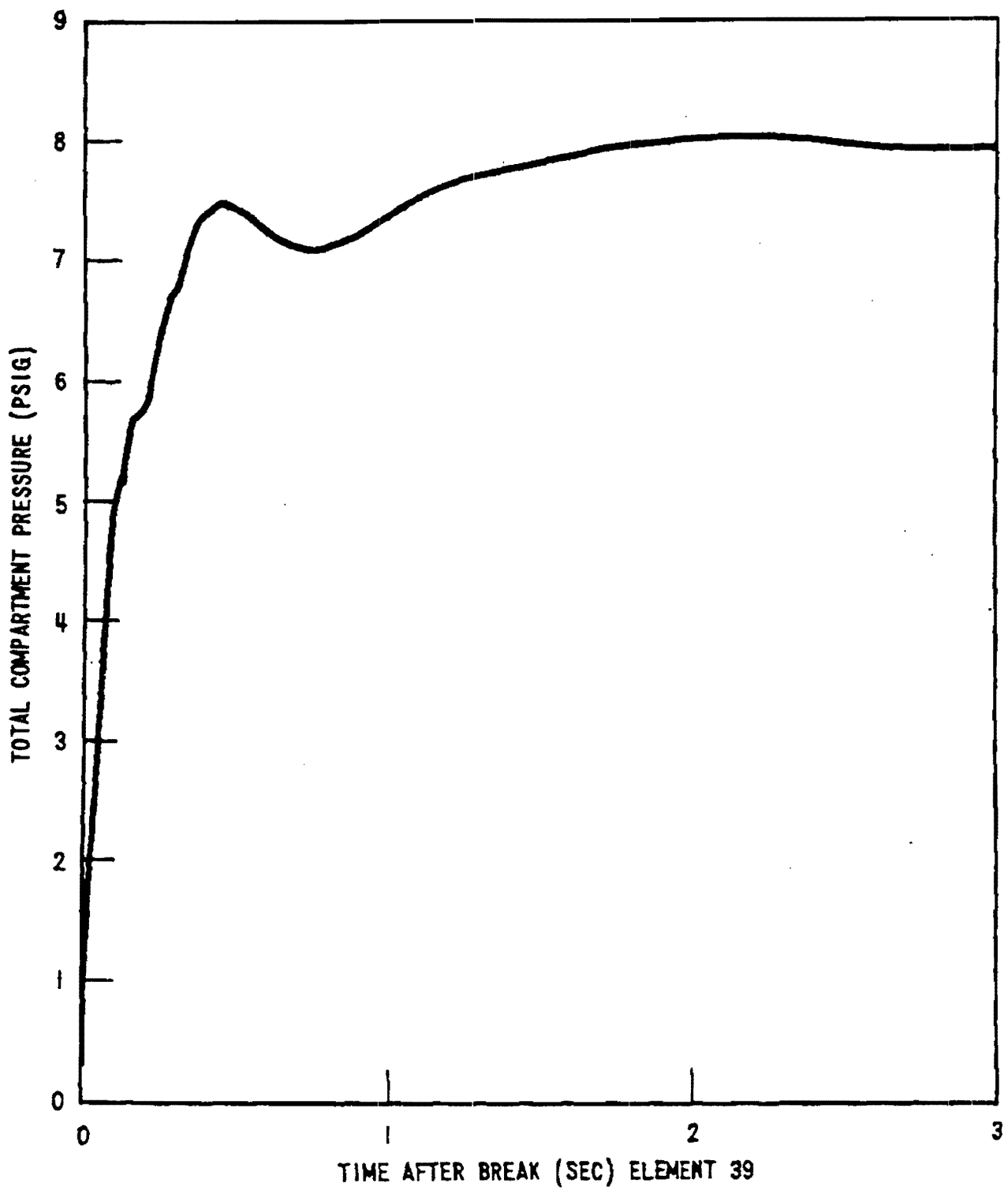

AMENDMENT 85

Figure 6.2.1-61 127 Square Inch Cold Leg Break (Reactor Cavity Analysis)

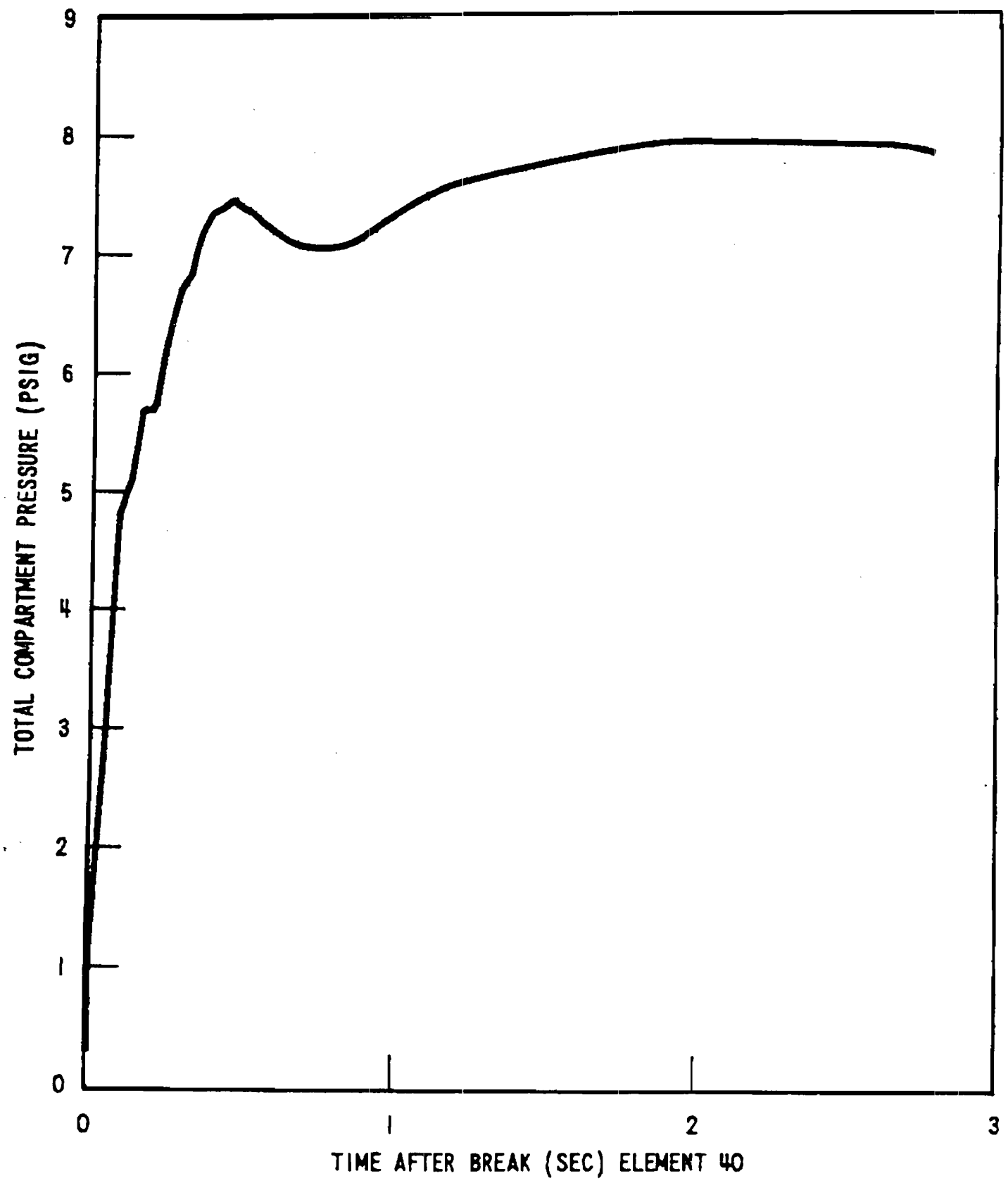

AMENDMENT 85

Figure 6.2.1-62 127 Square Inch Cold Leg Break (Reactor Cavity Analysis)

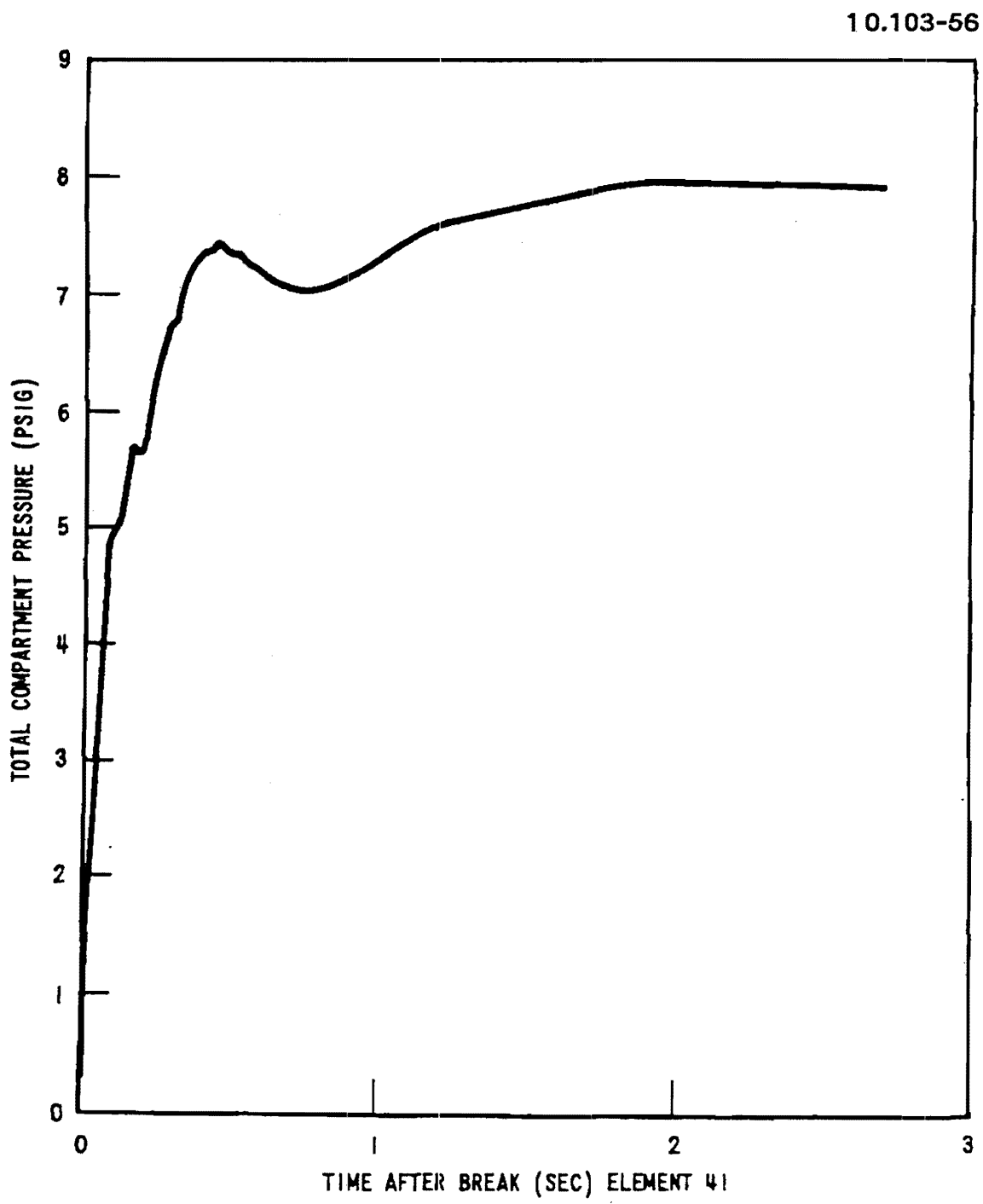

AMENDMENT 85

Figure 6.2.1-63 127 Square Inch Cold Leg Break (Reactor Cavity Analysis)

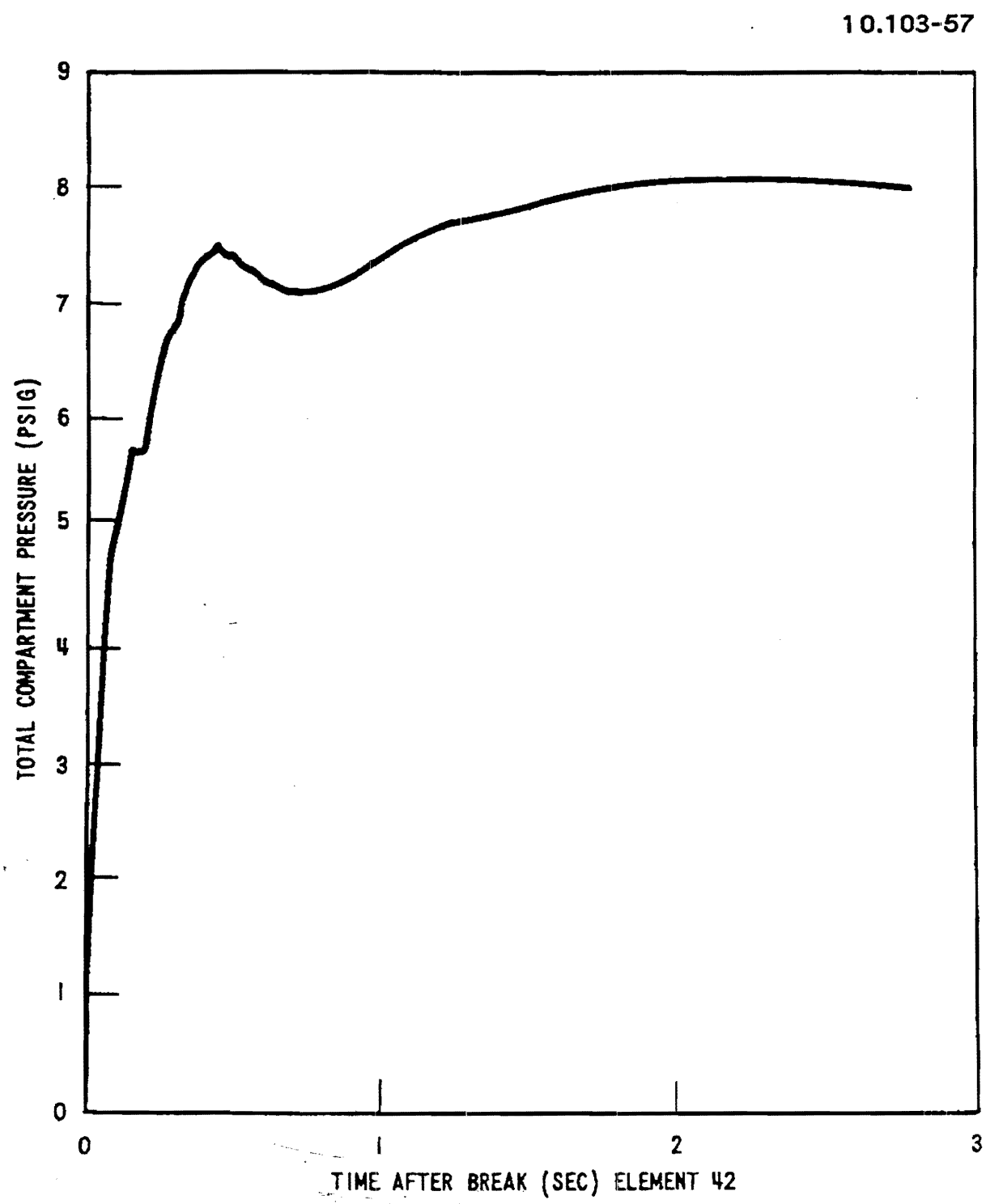

AMENDMENT 85

Figure 6.2.1-64 127 Square Inch Cold Leg Break (Reactor Cavity Analysis)

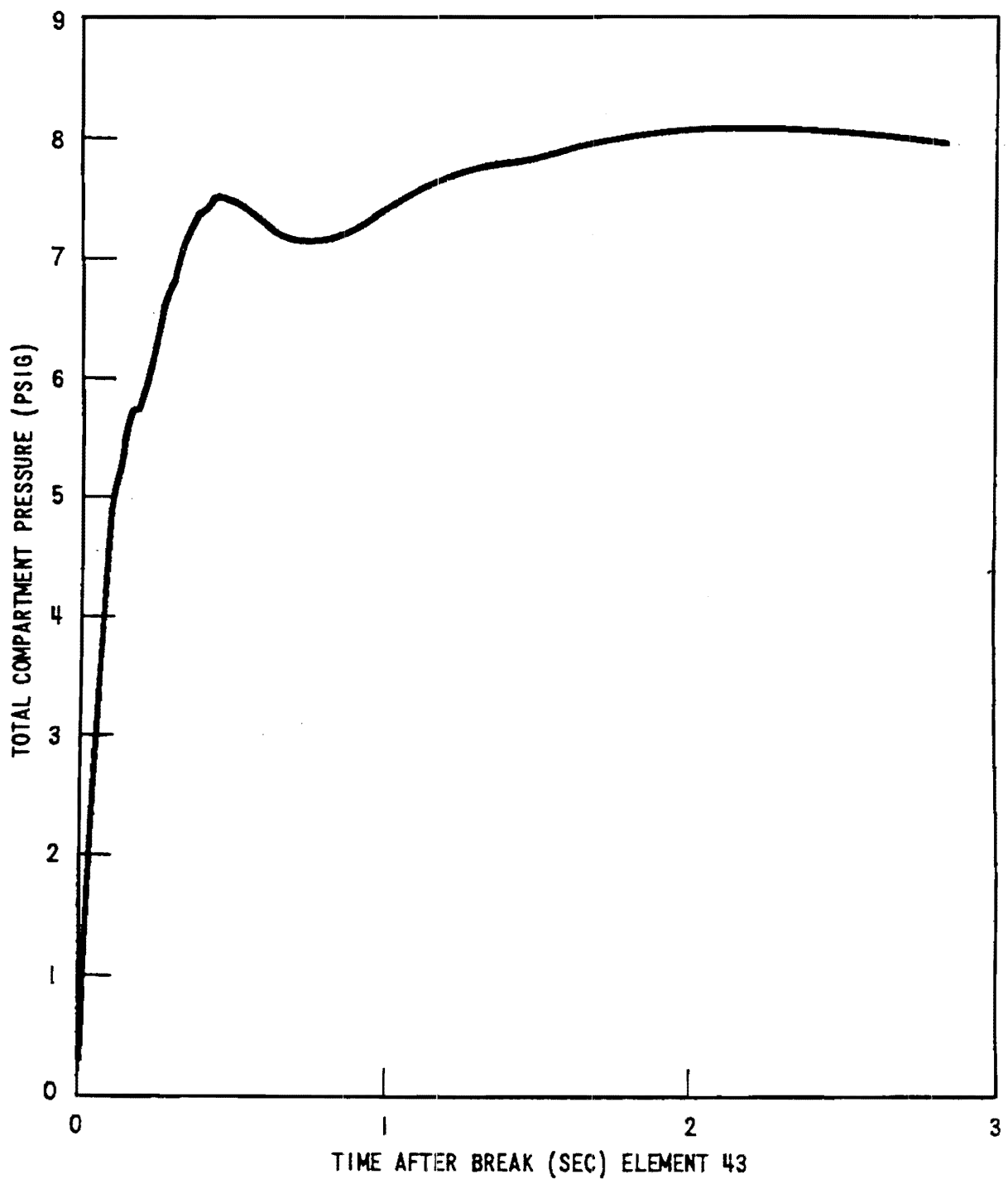

AMENDMENT 85

Figure 6.2.1-65 127 Square Inch Cold Leg Break (Reactor Cavity Analysis)

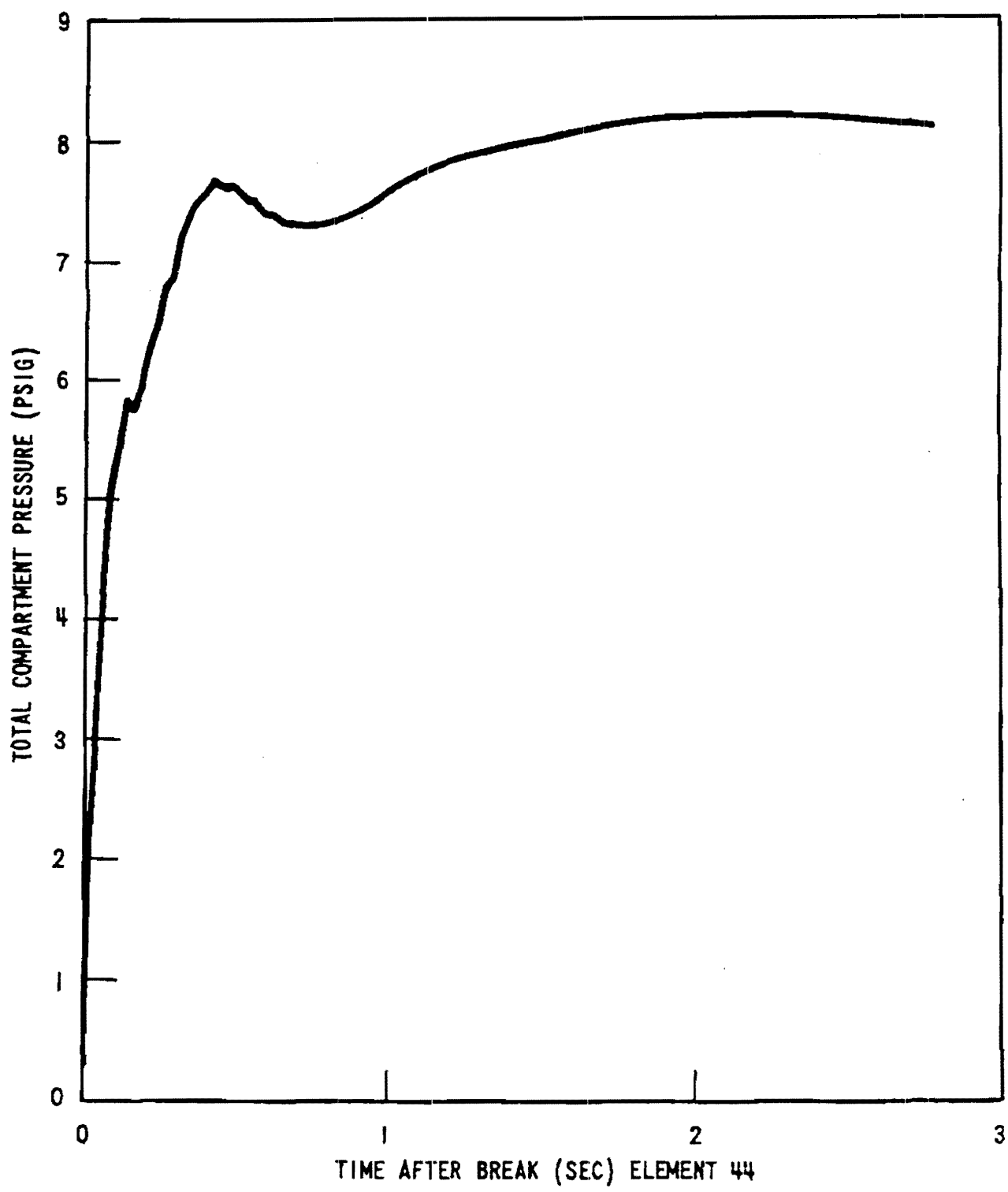

AMENDMENT 85

Figure 6.2.1-66 127 Square Inch Cold Leg Break (Reactor Cavity Analysis)

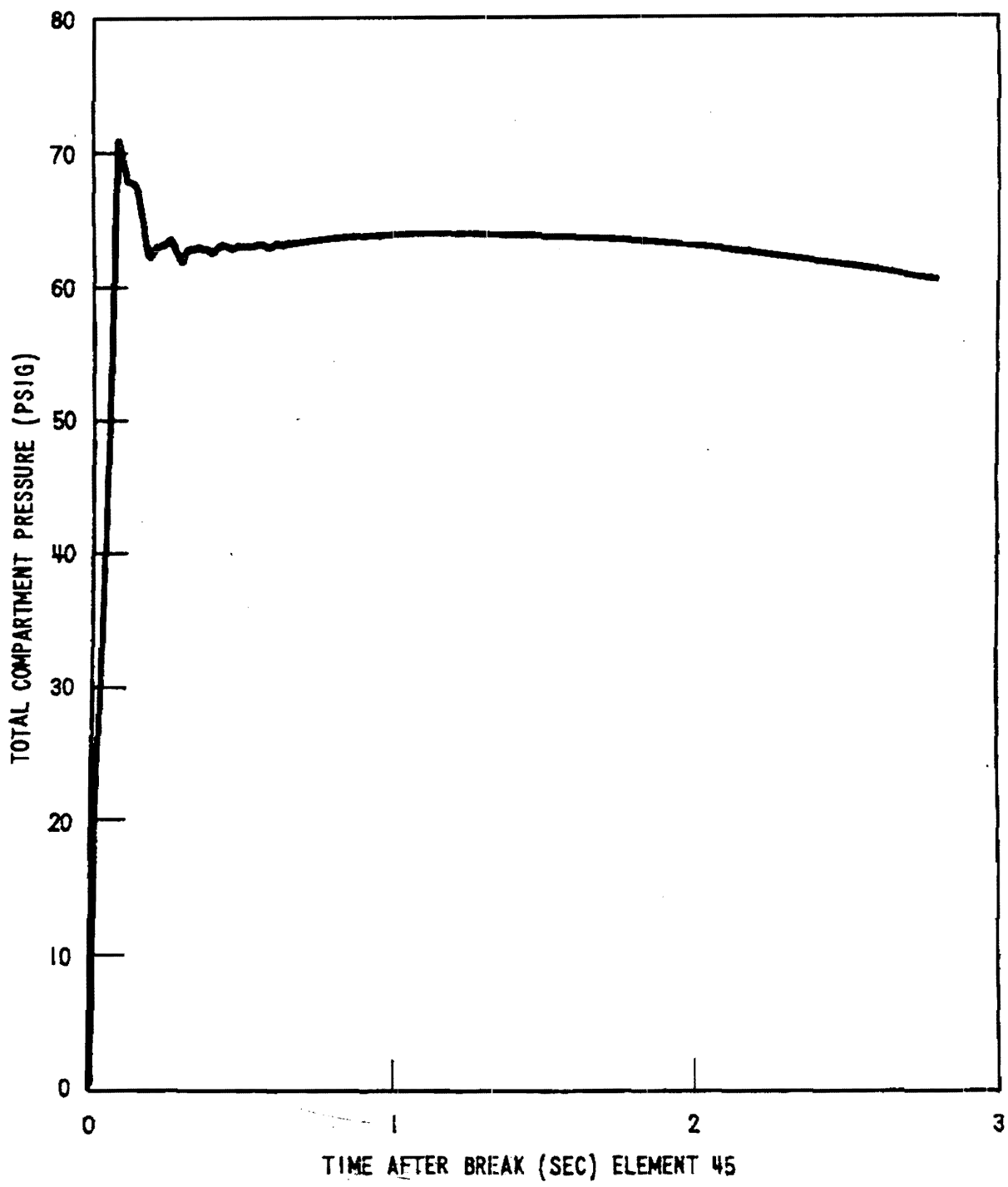

AMENDMENT 85

Figure 6.2.1-67 127 Square Inch Cold Leg Break (Reactor Cavity Analysis)

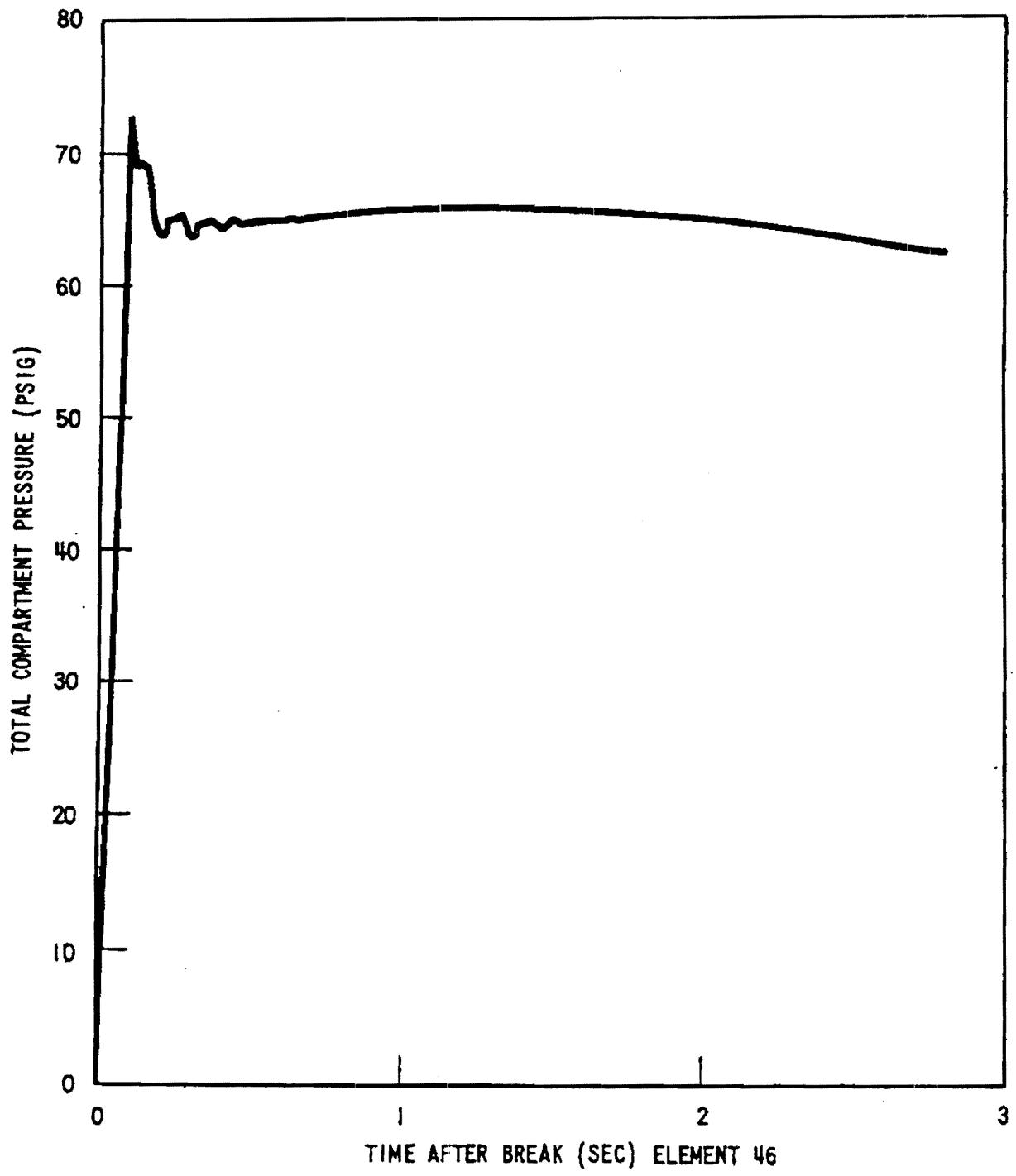

AMENDMENT 85

Figure 6.2.1-68 127 Square Inch Cold Leg Break Reactor Cavity Analysis)

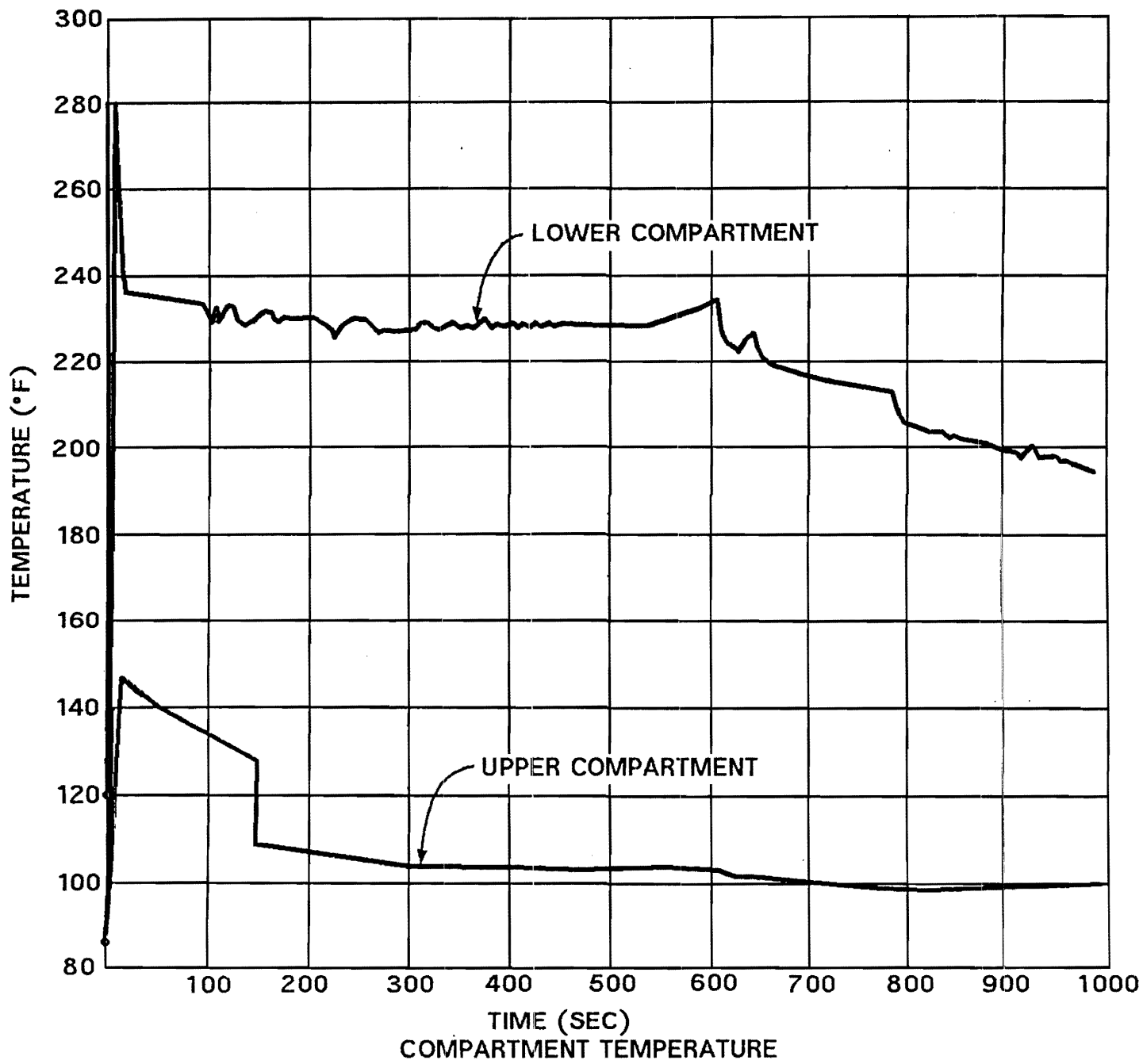

AMENDMENT 85

Figure 6.2.1-69 Compartment Temperature 1.4ft^2/Loop, 102% Power FCV Failure

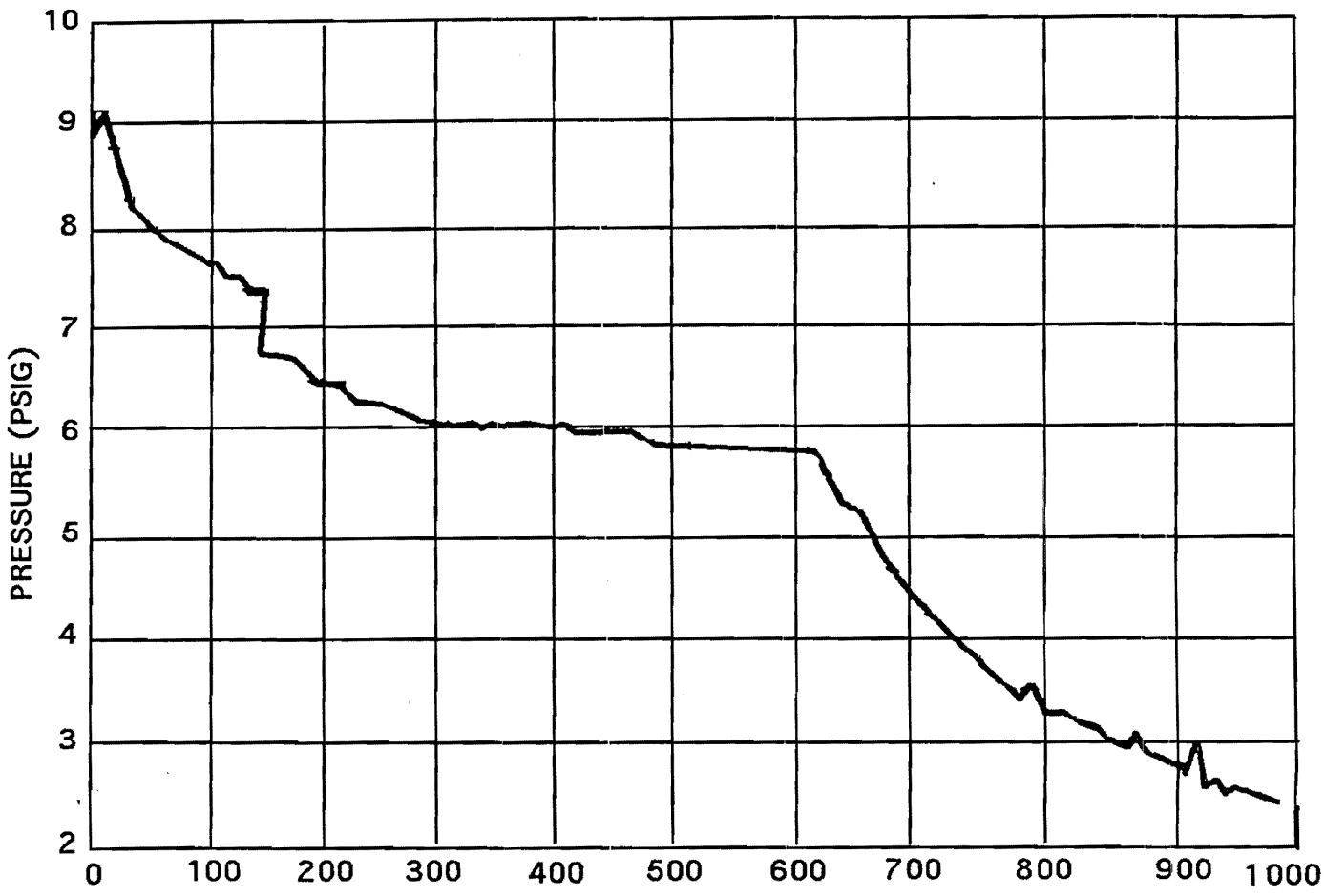

COMPARTMENT PRESSURE

AMENDMENT 85

Figure 6.2.1-70 Lower Compartment Pressure 1.4 Ft^2 Loop, 102% Power FCV Failure

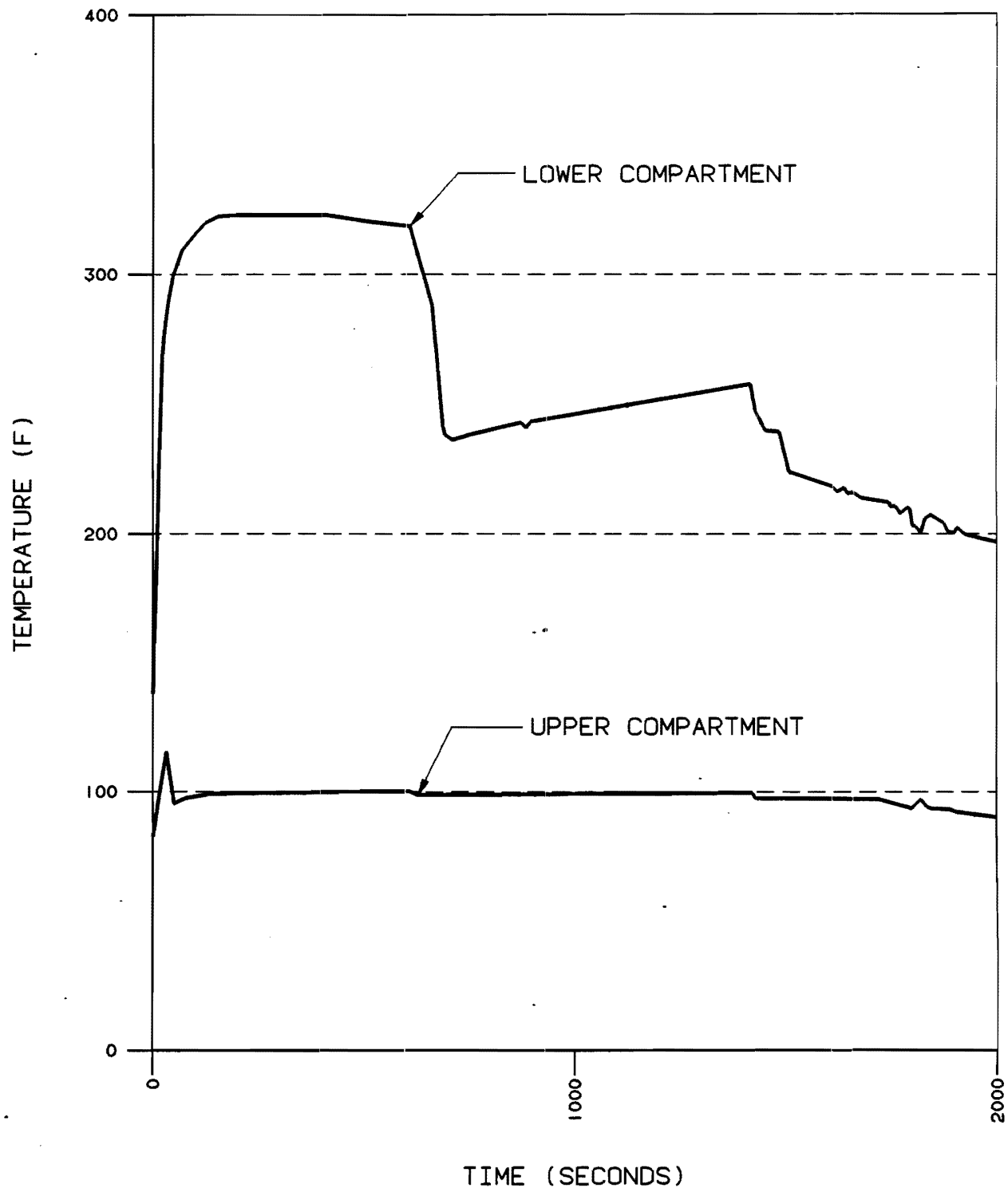

AMMENDMENT 69

Figure 6.2.1-71 Compartment Temperature 0.35 Ft^2 Split, 30% Power AFW Runout

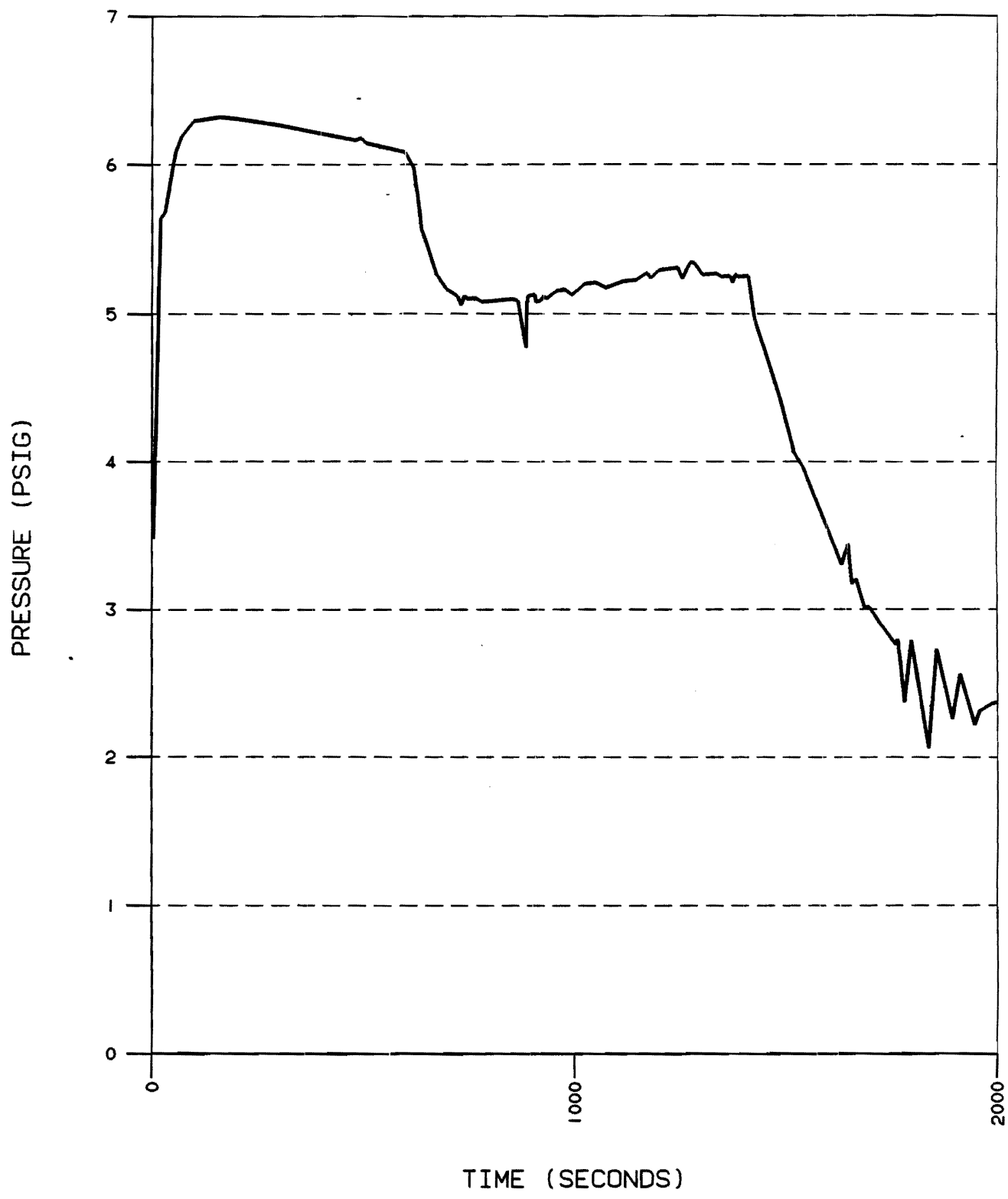

AMMENDMENT 69

Figure 6.2.1-72 Lower Compartment Pressure 0.35 Ft^2 Split, 30% Power Afw Runout

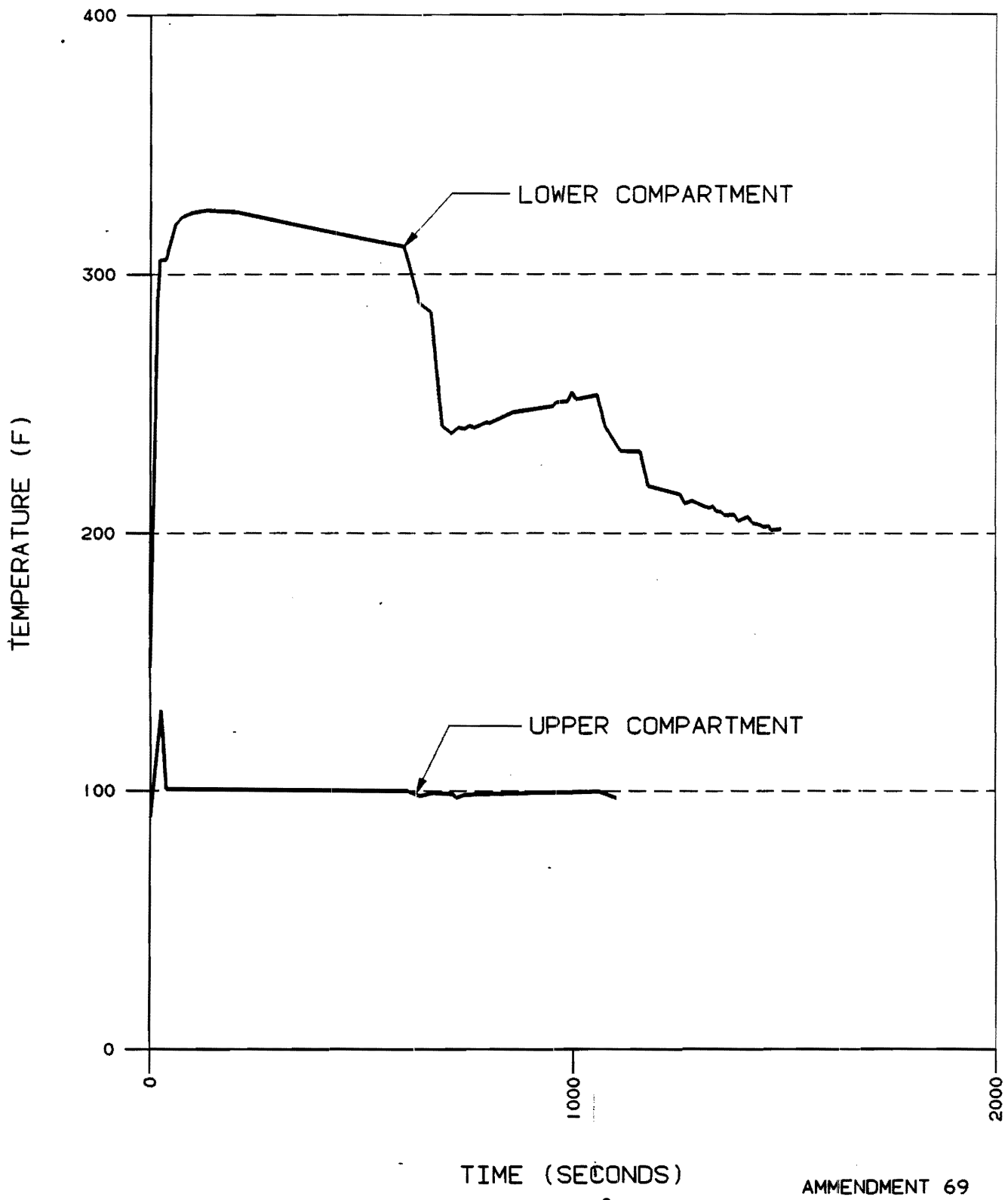

Figure 6.2.1-73 Compartment Temperature 0.6 Ft^2 Split, 30% Power AFW Runout

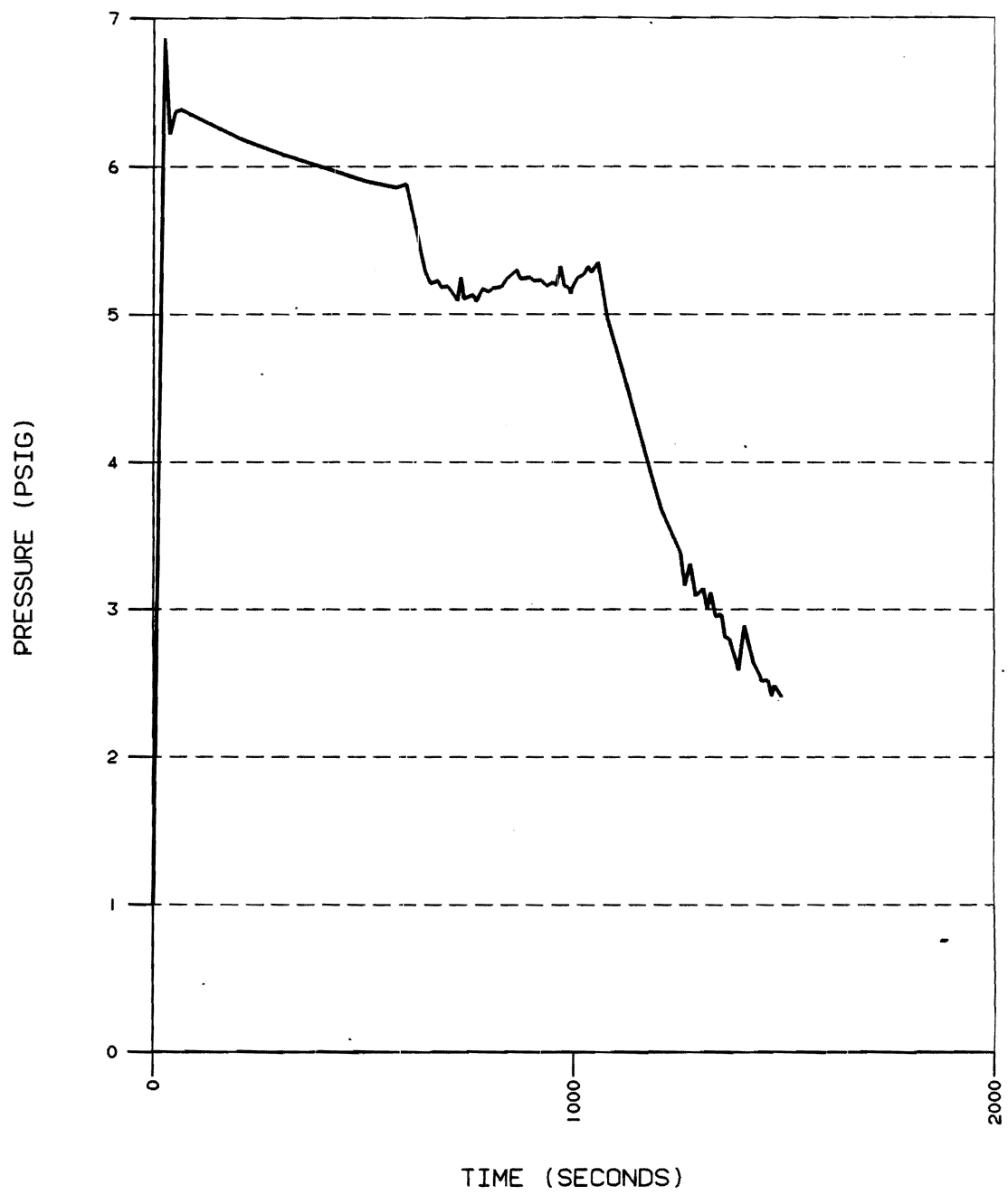

AMMENDMENT 69

Figure 6.2.1-74 Lower Compartment Pressure 0.6 Ft^2 Split, 30% Power AFW Fail

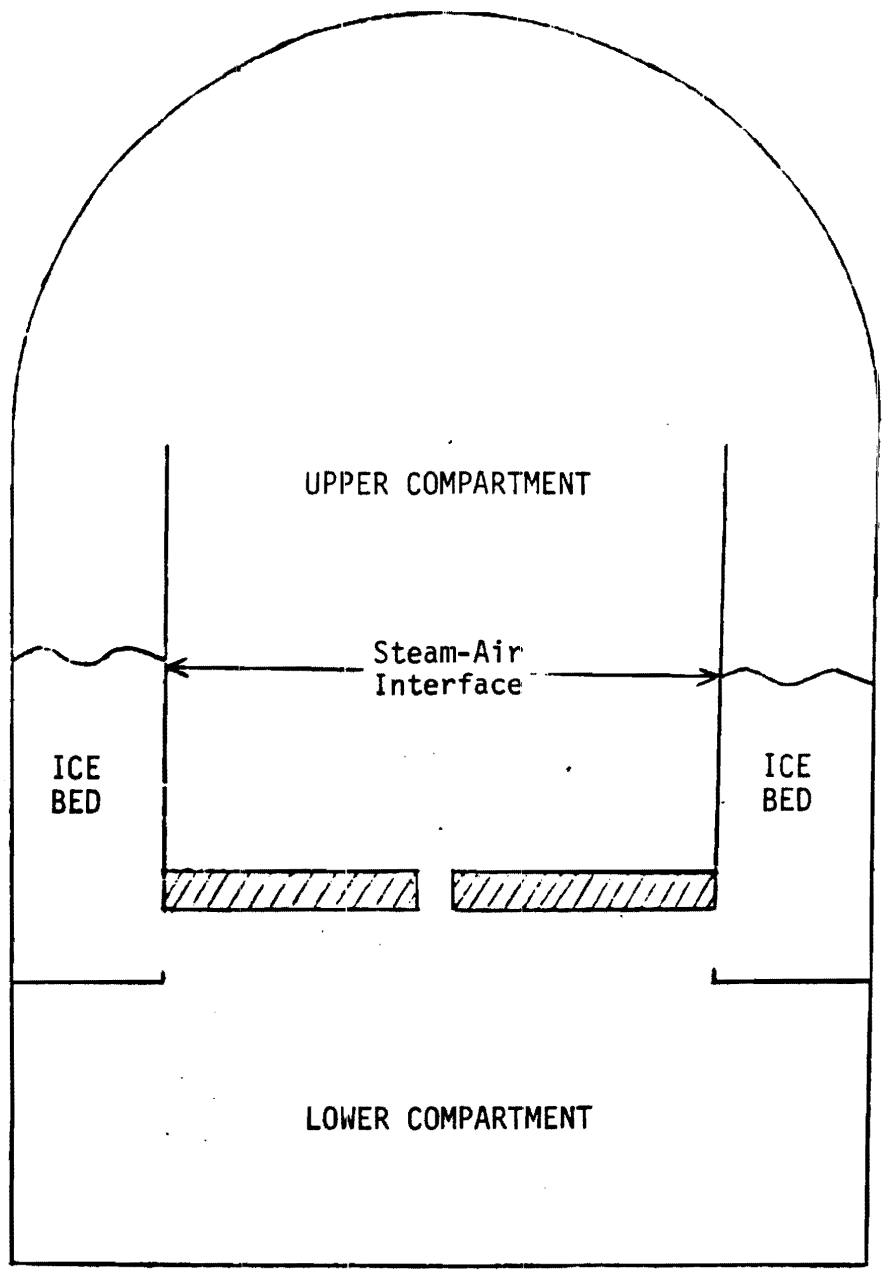

Figure 6.2.1-75

Figure 6.2.1-75

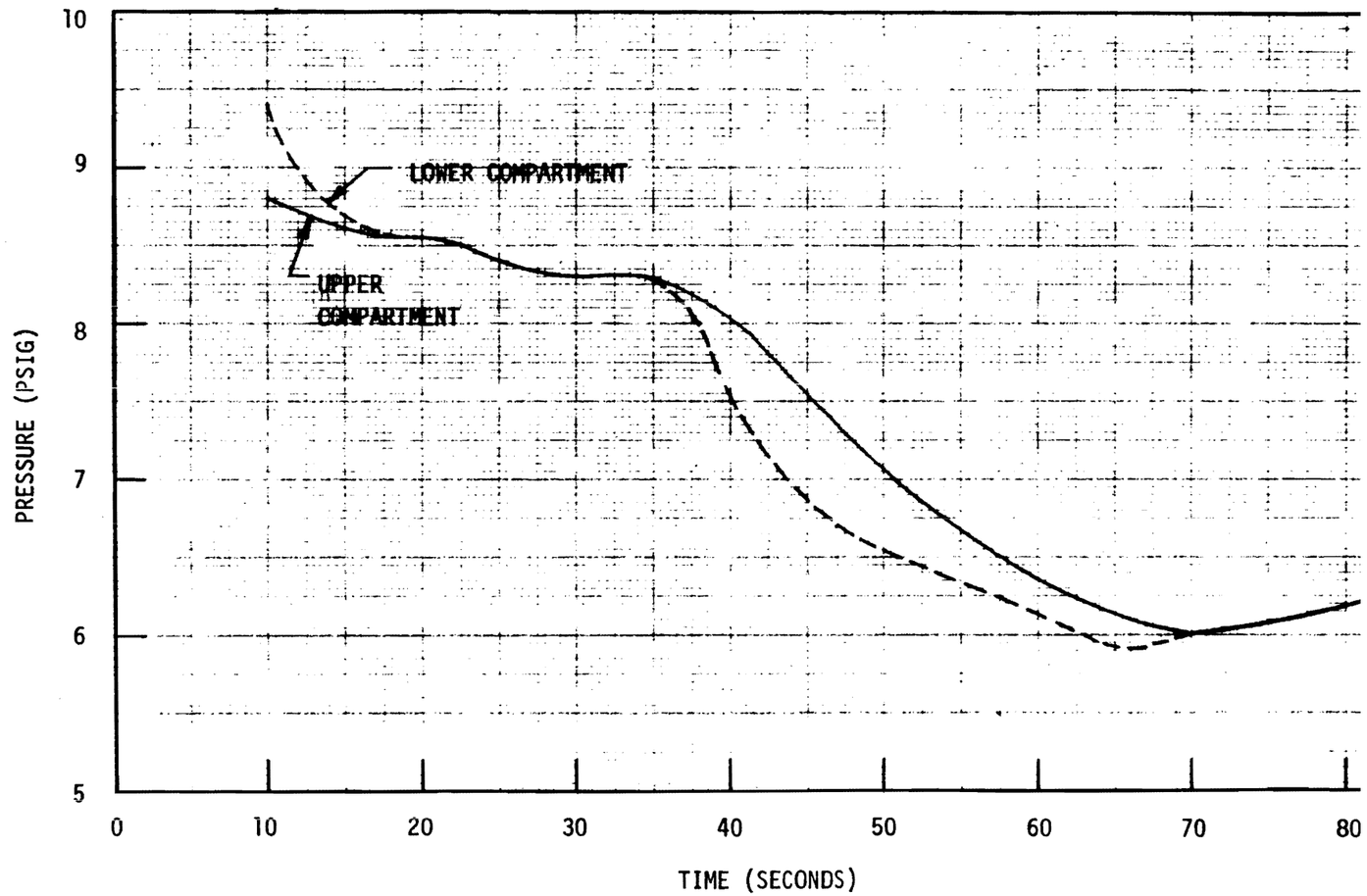

Figure 6.2.1-76

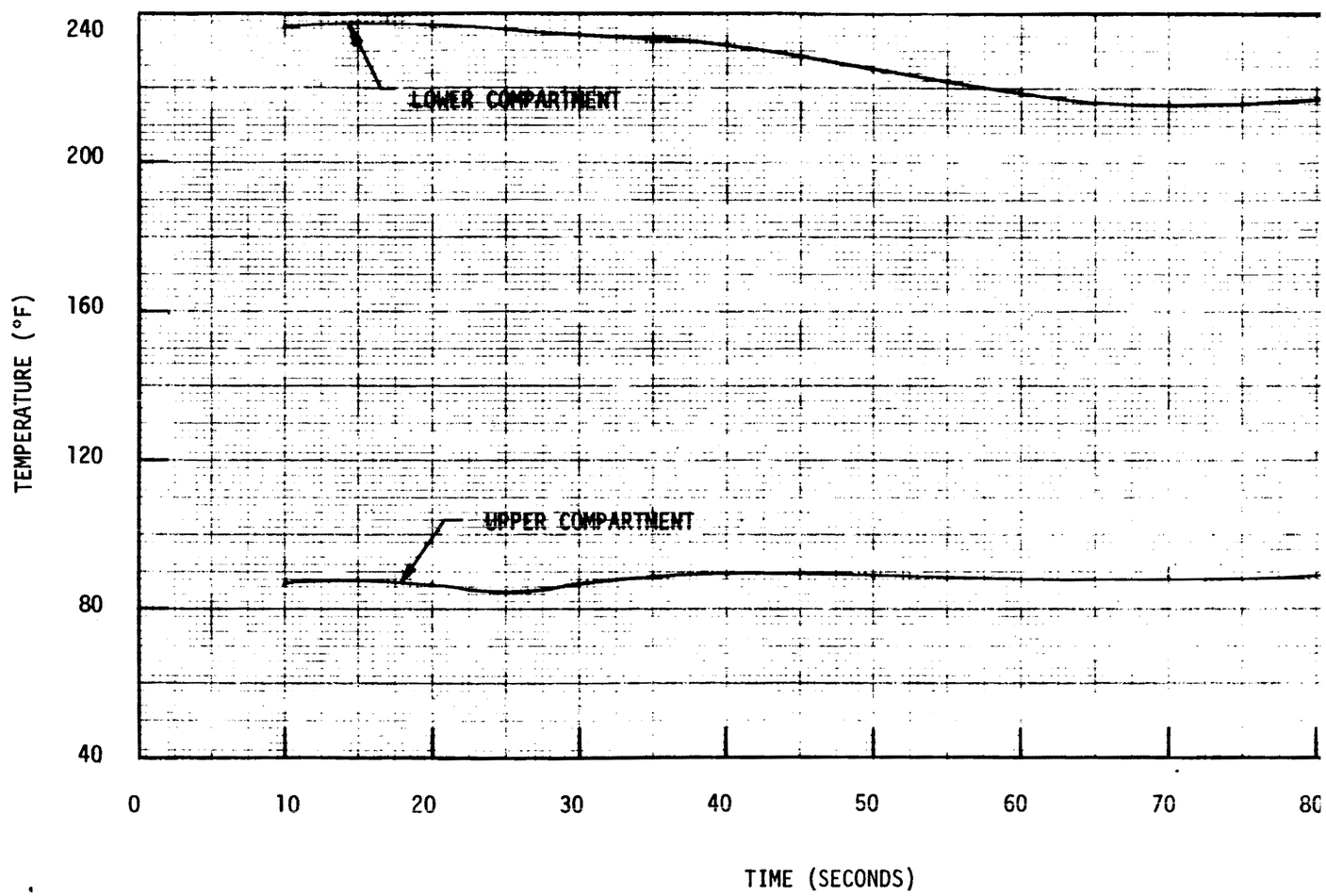

Figure 6.2.1-77

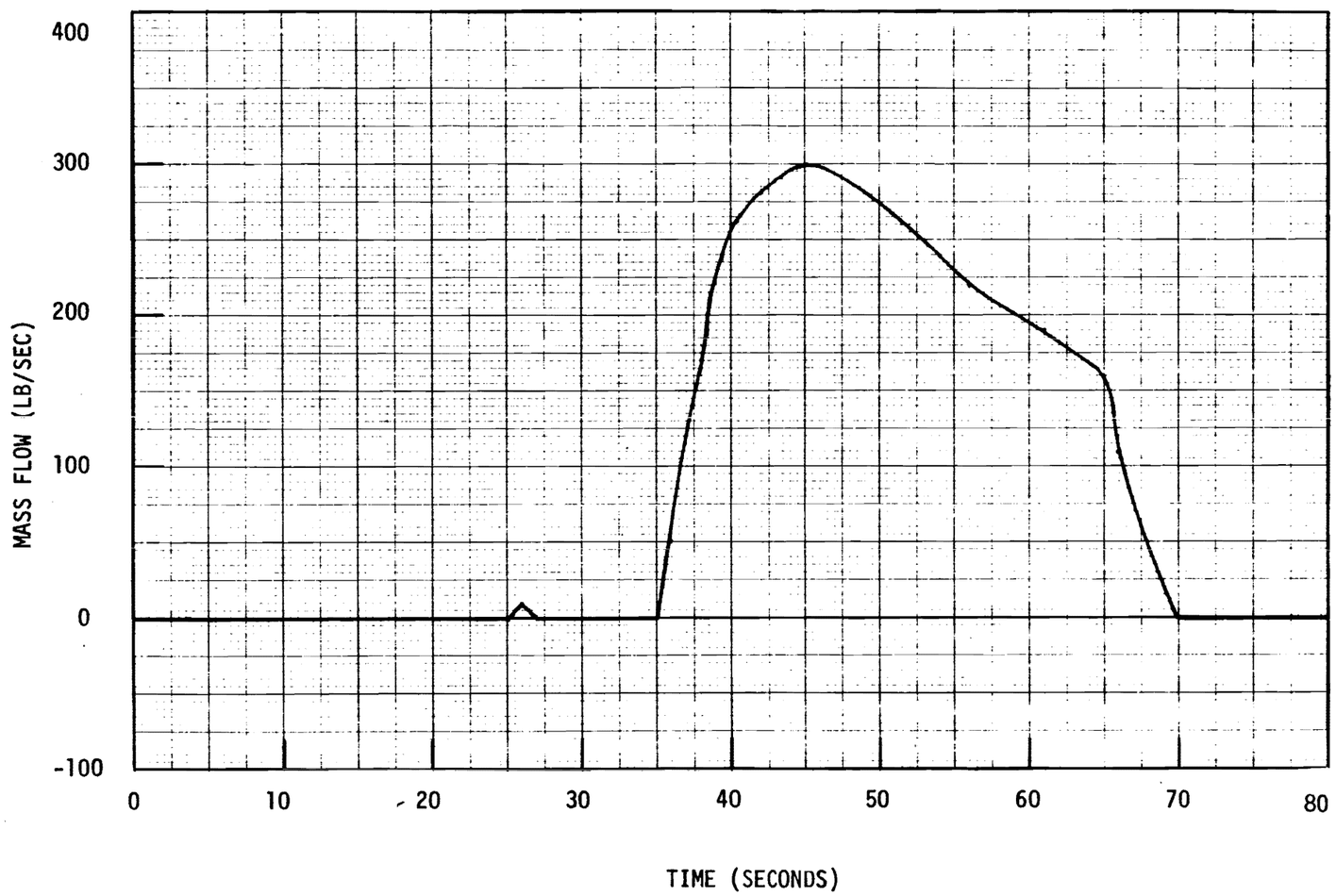

Figure 6.2.1-78

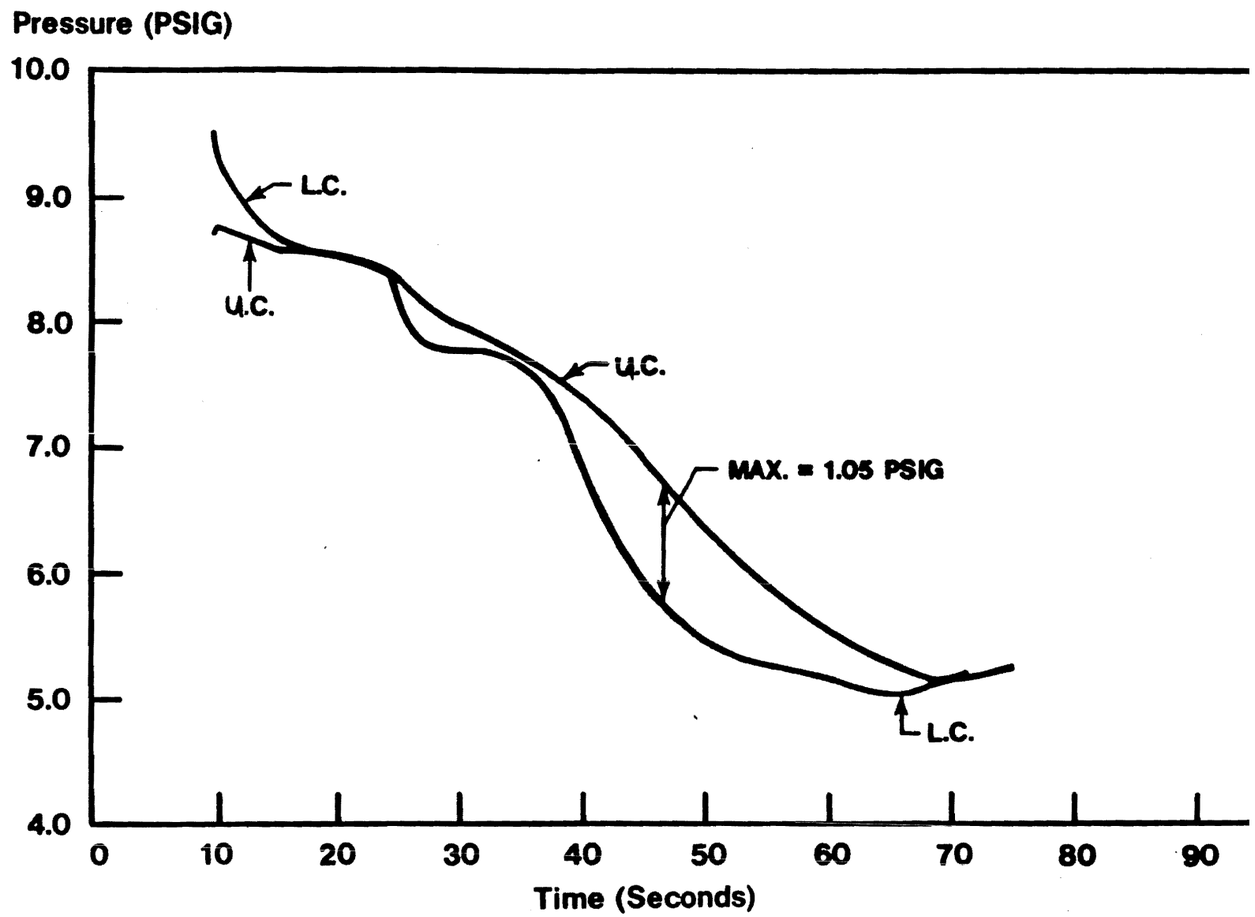

Figure 6.2.1-79

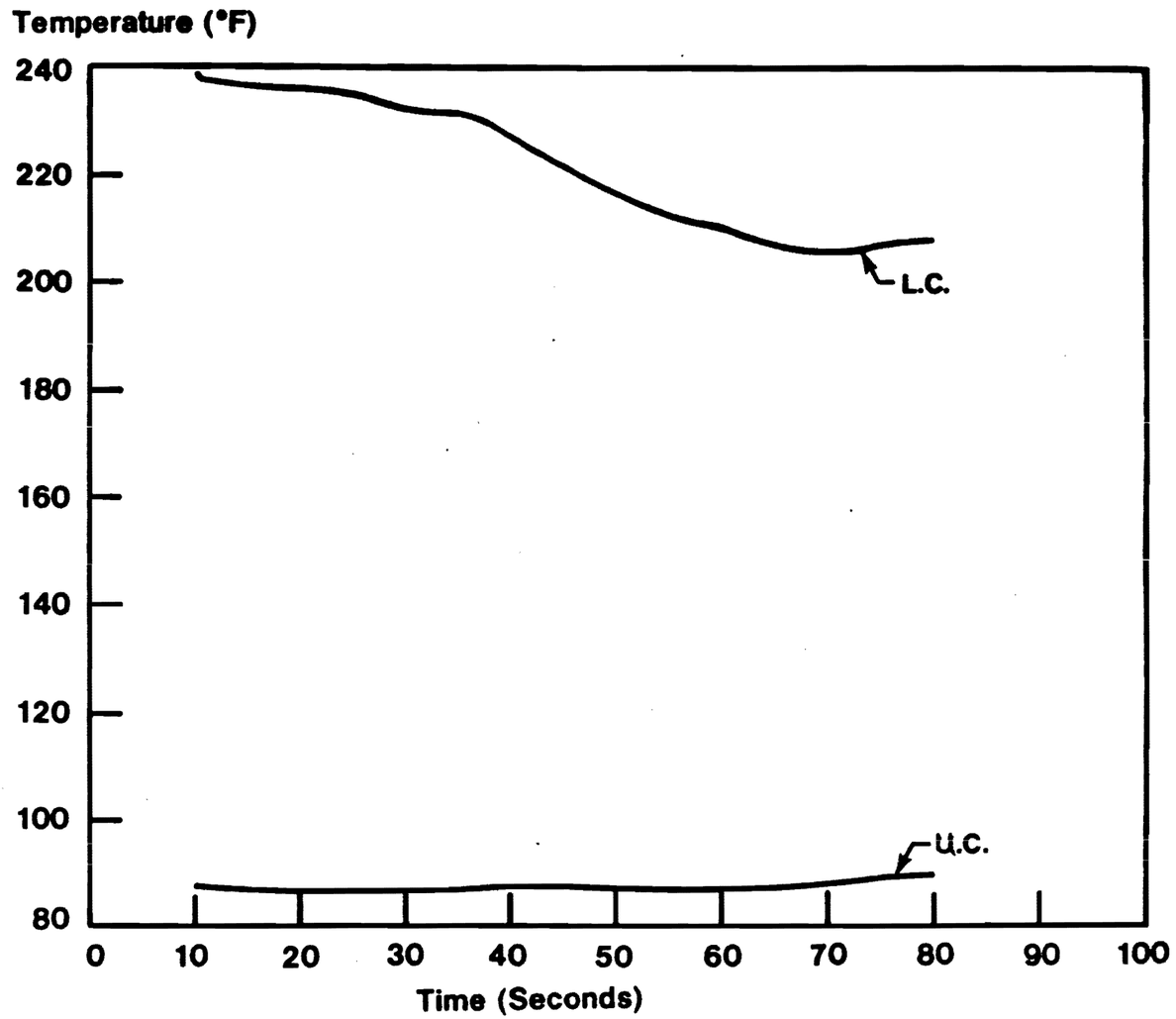

Figure 6.2.1-80

11,002-1

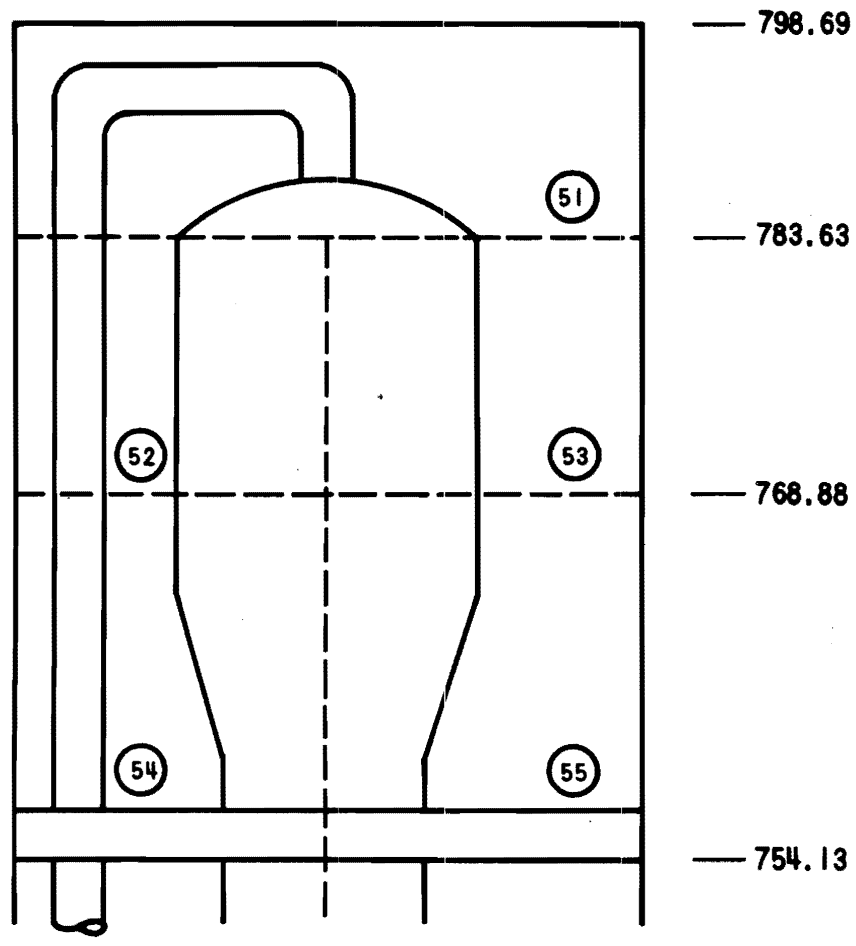

"Added By Amendment 27"

Figure 6.2.1-81 Steam Generator Enclosure Nodalization

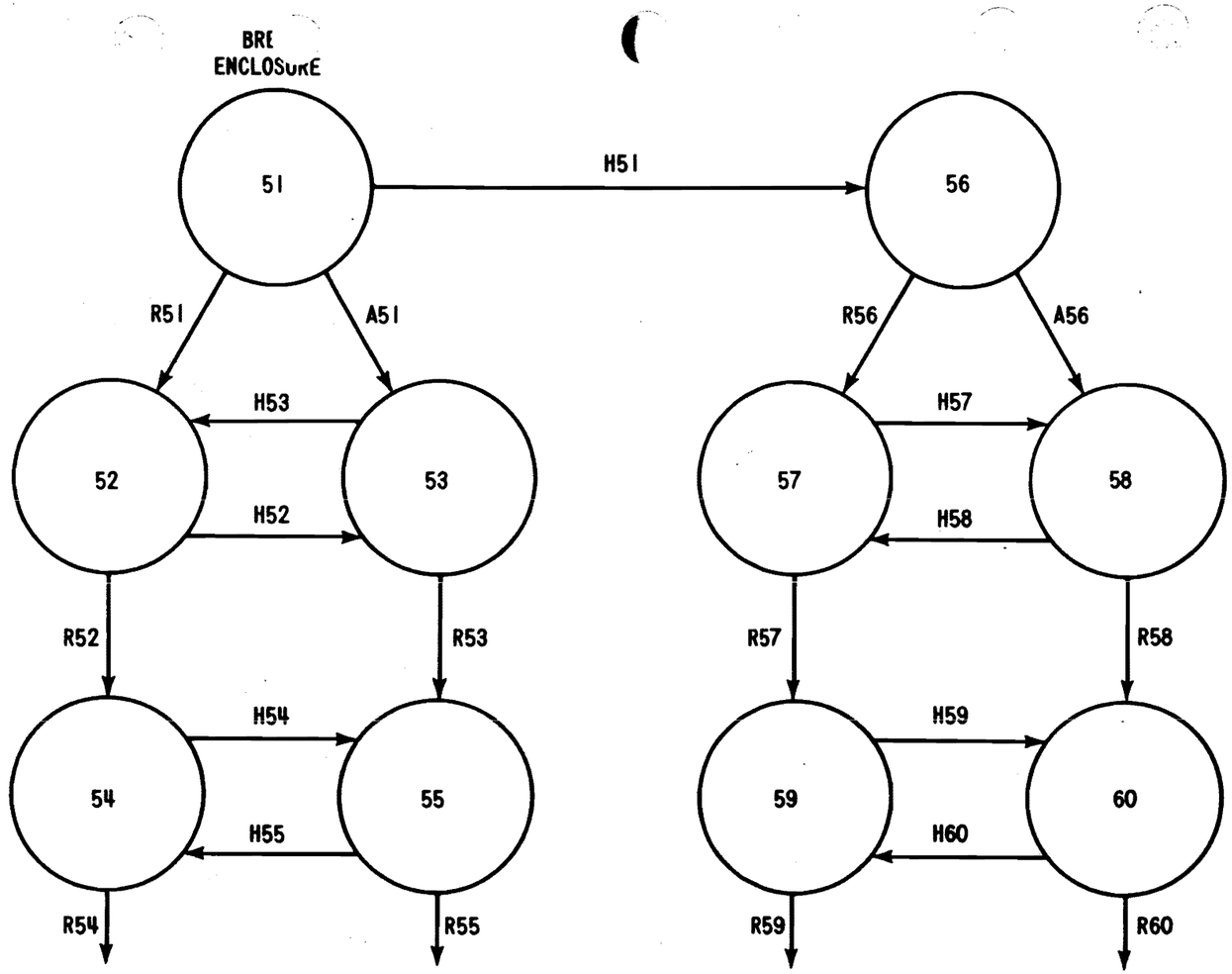

Figure 6.2.1-82. Flow Paths for TMD Steam Generator Enclosure Short-Term Pressure Analysis

"Added By Amendment 27"

11.002-2

Figure 6.2.1-82 Flow Paths For TMD Steam Generator Enclosure Short-term Pressure Analysis

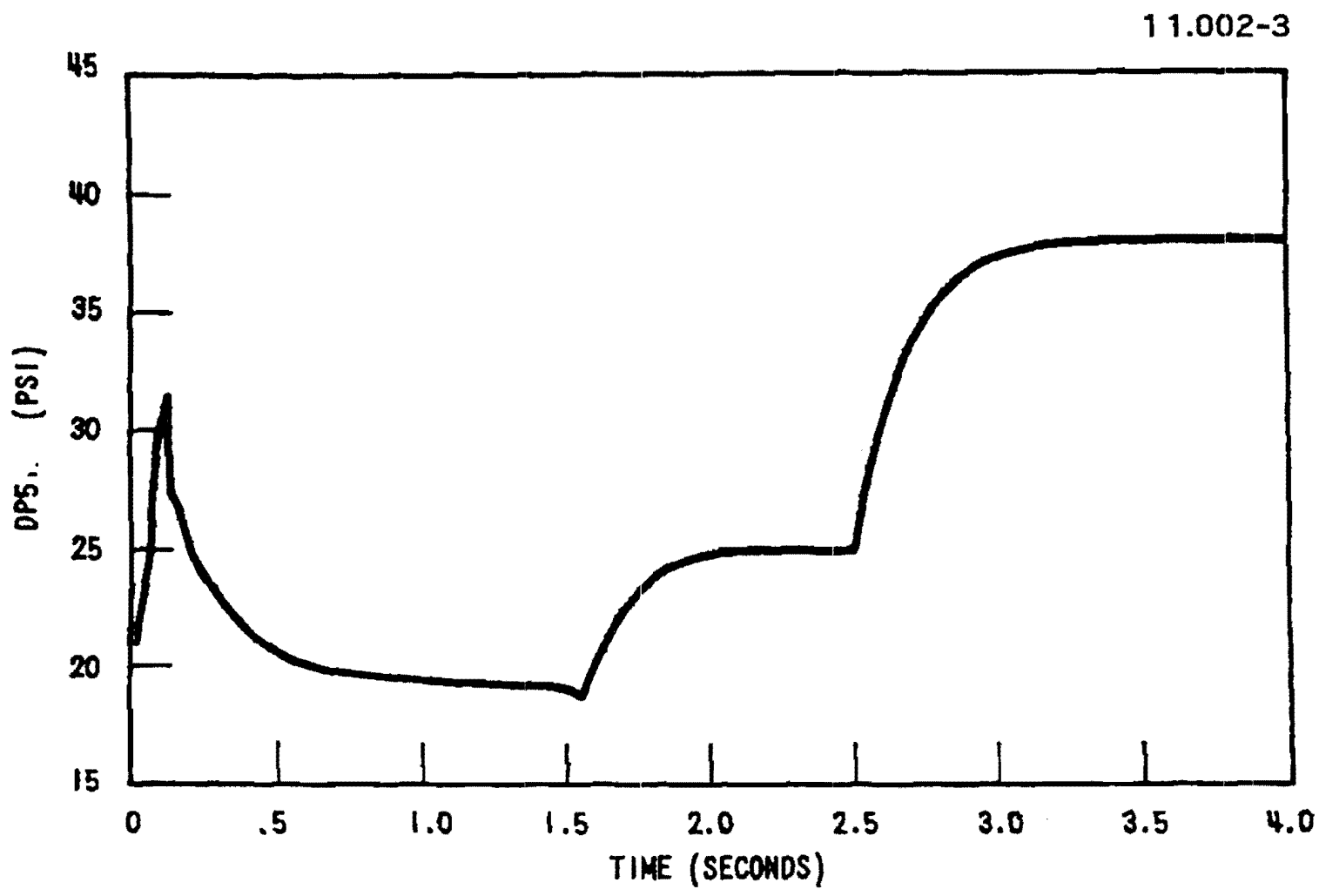

AMENDMENT 85

WATTS BAR NUCLEAR PLANT
FINAL SAFETY
ANALYSIS REPORT

PRESSURE TRANSIENT BETWEEN BREAK
ELEMENT AND UPPER COMPARTMENT
(STEAM GENERATOR ENCLOSURE ANALYSIS)

figure 6.2.1-83

SCANNED DOCUMENT
THIS IS A SCANNED DOCUMENT MAINTAINED ON
THE WBNP OPTIGRAPHICS SCANNER DATABASE

Figure 6.2.1-83 Pressure Transient Between Break Element And Upper Compartment (Steam Generator Enclosure Analysis)

11.002-4

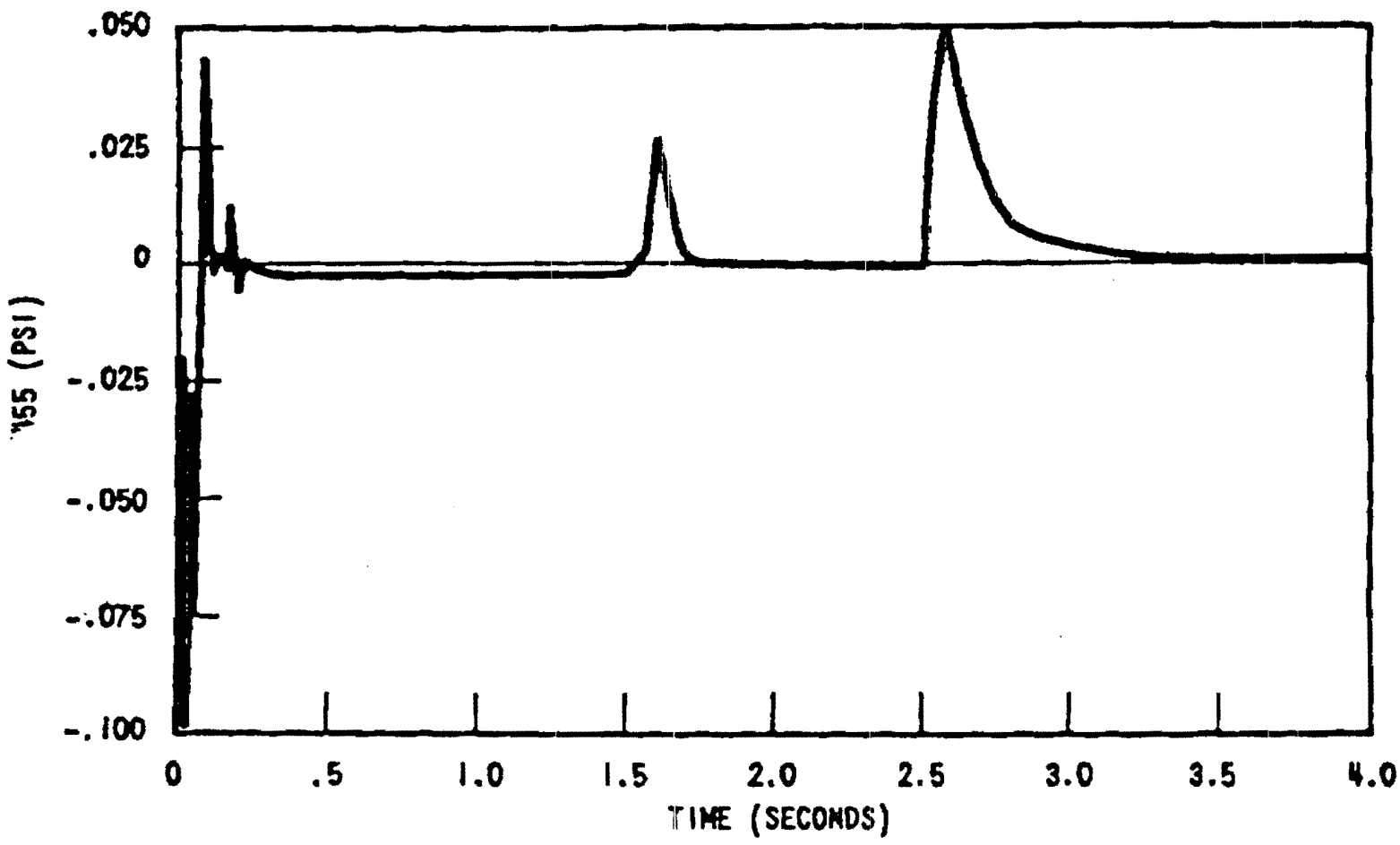

AMENDMENT 85

WATTS BAR NUCLEAR PLANT
FINAL SAFETY
ANALYSIS REPORT

DIFFERENTIAL PRESSURE TRANSIENT ACROSS THE
STEAM GENERATOR VESSEL
(STEAM GENERATOR ENCLOSURE ANALYSIS)
FIGURE 6.2.1-84

CANNED DOCUMENT
SCANNED DOCUMENT MAINTAINED ON
OPTIGRAPHICS SCANNER DATABASE

Figure 6.2.1-84 Differential Pressure Transient Across The Steam Generator Vessel (Steam Generator Enclosure Analysis)

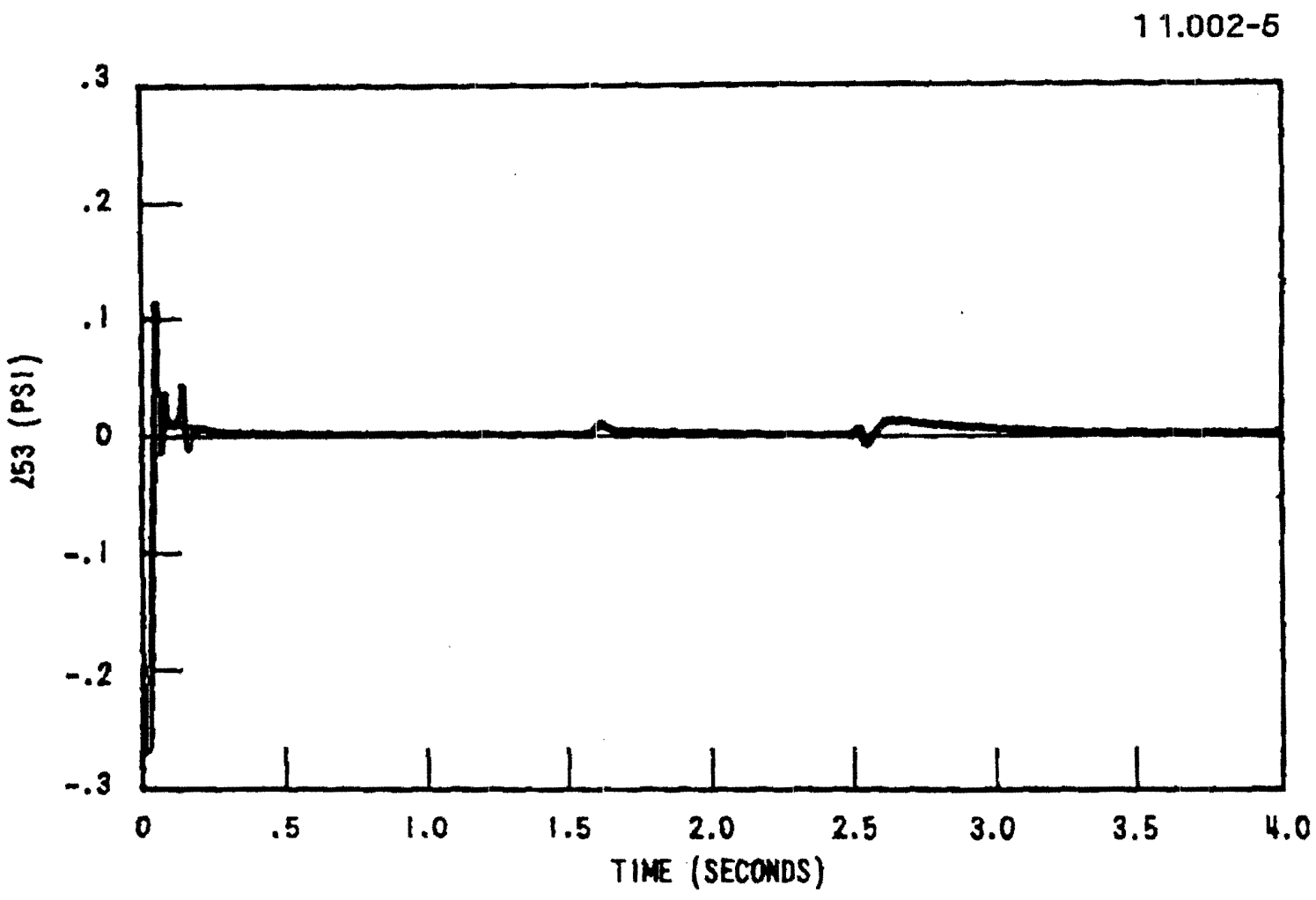

AMENDMENT 85

WATTS BAR NUCLEAR PLANT
FINAL SAFETY
ANALYSIS REPORT

DIFFERENTIAL PRESSURE TRANSIENT
ACROSS THE STEAM GENERATOR VESSEL
(STEAM GENERATOR ENCLOSURE ANALYSIS
figure 6.2.1- 85

SCANNED DOCUMENT
THIS IS A SCANNED DOCUMENT MAINTAINED ON
THE WBNP OPTIGRAPHICS SCANNER DATABASE

Figure 6.2.1-85 Differential Pressure Transient Cross The Steam Generator Vessel (Steam Generator Enclosure Analysis)

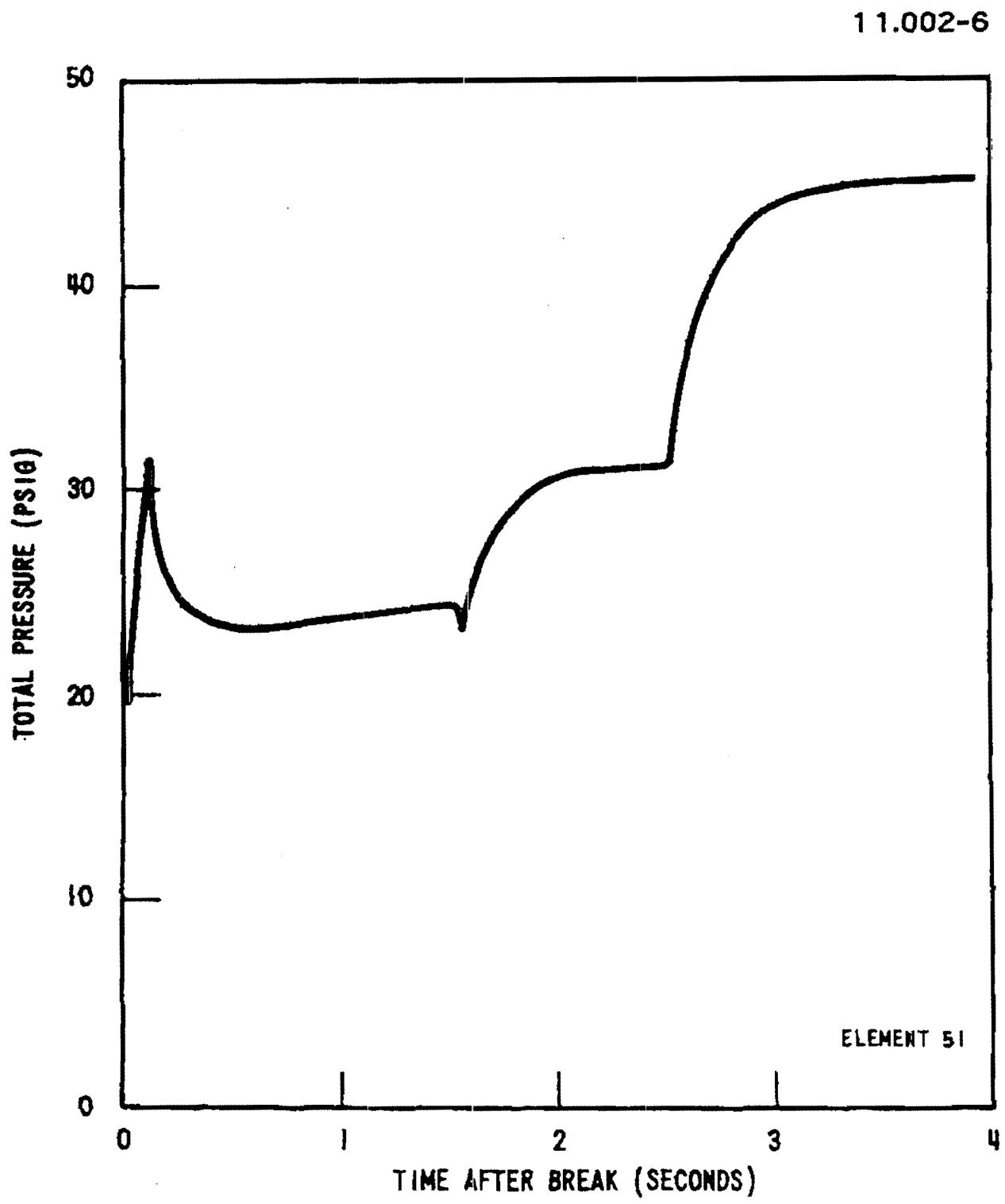

AMENDMENT 85

WATTS BAR NUCLEAR PLANT
FINAL SAFETY
ANALYSIS REPORT

PRESSURE VERSUS TIME FOR
THE BREAK ELEMENT
(STEAM GENERATOR ENCLOSURE ANALYSIS
figure 6.2.1-86

SCANNED DOCUMENT
THIS IS A SCANNED DOCUMENT MAINTAINED ON
THE WBNP OPTIGRAPHICS SCANNER DATABASE

Figure 6.2.1-86 Pressure Versus Time For The Break Element (Steam Generator Enclosure Analysis)

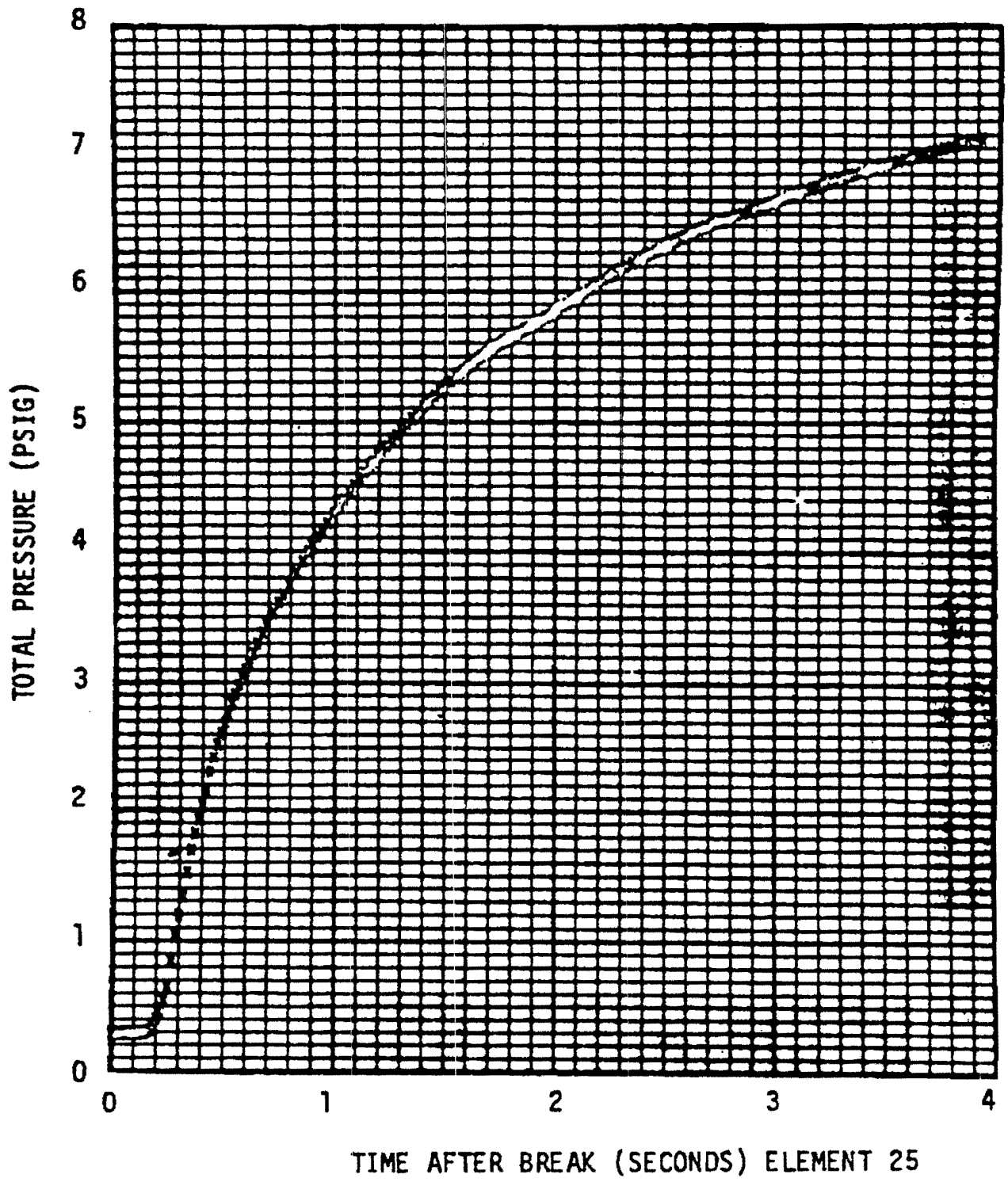

AMENDMENT 85

WATTS BAR NUCLEAR PLAN
FINAL SAFETY
ANALYSIS REPORT

UPPER COMPARTMENT PRESSU
VERSUS TIME
(STEAM GENERATOR ENCLOSURE ANA
figure 6.2.1-86a

SCANNED DOCUMENT
THIS IS A SCANNED DOCUMENT MAINTAINED ON
THE WBNP OPTIGRAPHICS SCANNER DATABASE

Figure 6.2.1-86a Upper Compartment Pressure Versus Time (Steam Generator Enclosure Analysis)

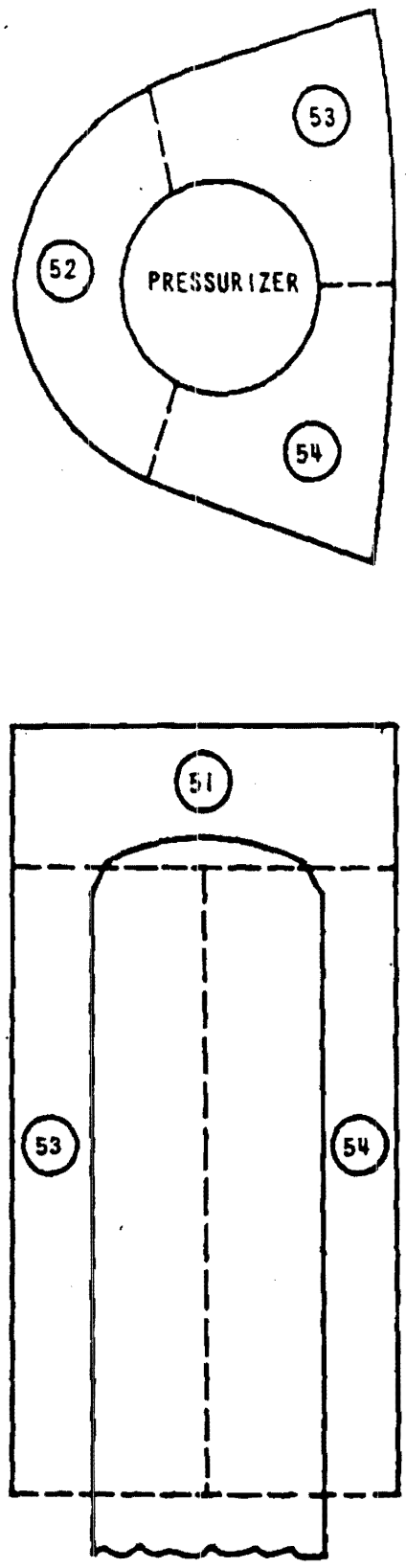

REVISED BY AMENDMENT 89

WATTS BAR NUCLEAR PLANT
FINAL SAFETY
ANALYSIS REPORT

NODALIZATION
PRESSURE ENCLOSURE ANALYSIS

figure 6.2.1-87

SCANNED DOCUMENT
THIS IS A SCANNED DOCUMENT MAINTAINED ON THE WBNP OPTIGRAPHICS SCANNER DATABASE

Figure 6.2.1-87 Nodalization Pressure Enclosure Analysis

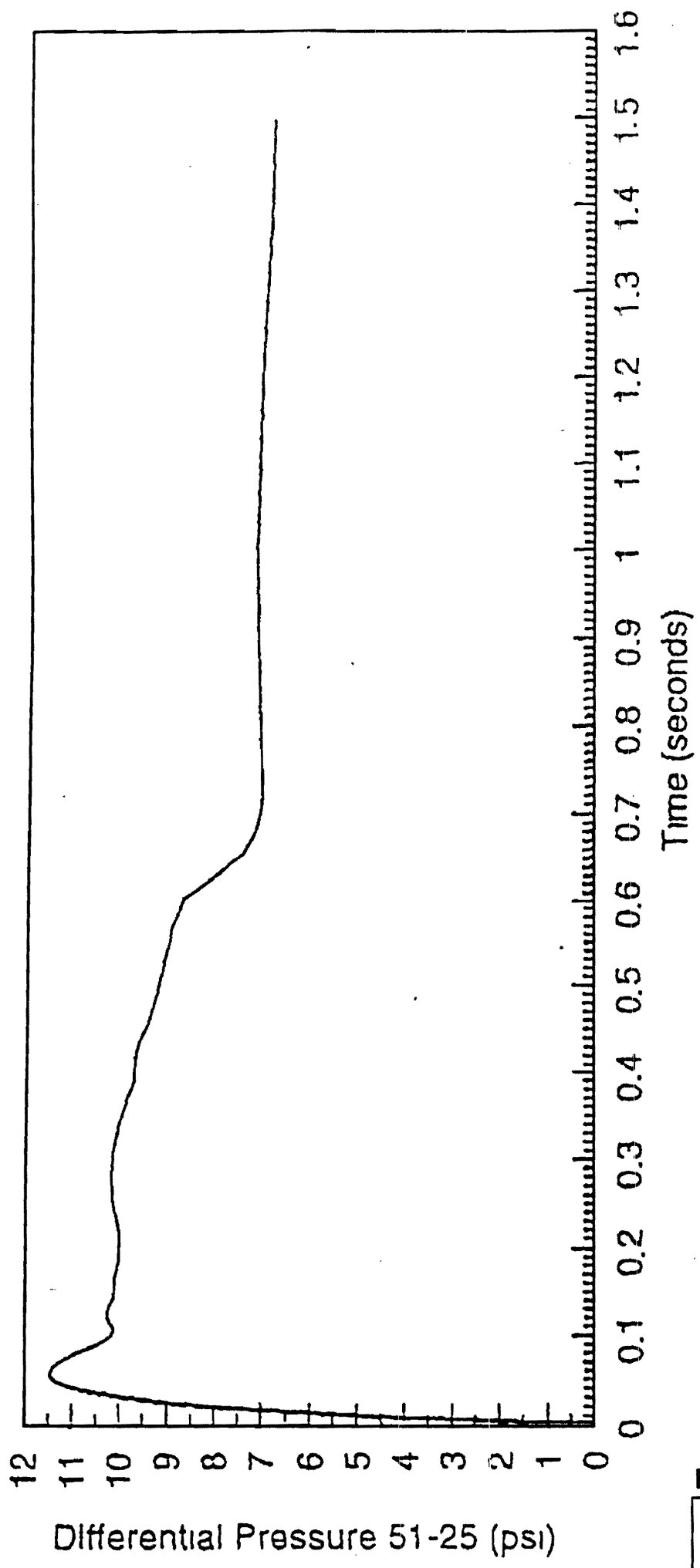

REVISED BY AMENDMENT 89

WATTS BAR NUCLEAR PLANT
FINAL SAFETY
ANALYSIS REPORT

PRESSURE TRANSIENT BETWEEN BREAK ELEMENT AND UPPER COMPARTMENT (PRESSURIZER ENCLOSURE ANALYSIS)
figure 6.2.1-88

SCANNED DOCUMENT
THIS IS A SCANNED DOCUMENT MAINTAINED ON THE WBNP OPTIGRAPHICS SCANNER DATABASE

Figure 6.2.1-88 Pressure Transient Between Break Element And Upper Compartment (Pressurizer Enclosure Analysis)

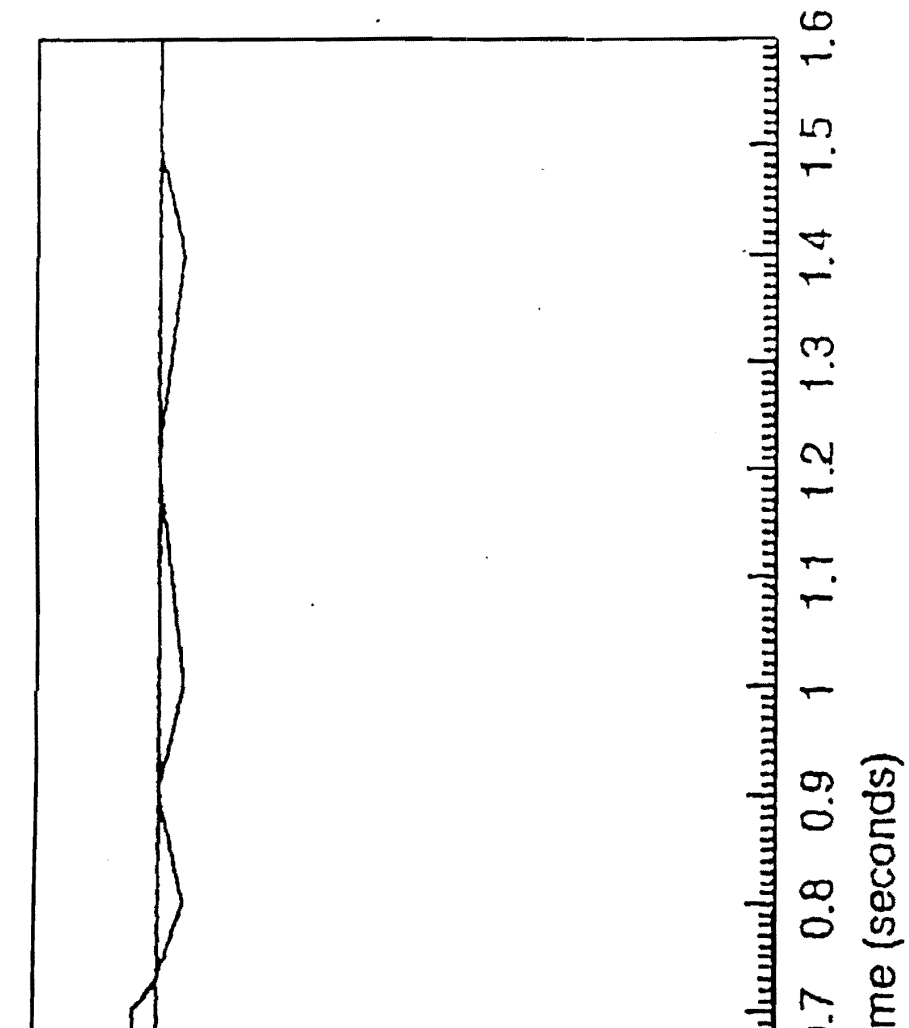

REVISED BY AMENDMENT 89

WATTS BAR NUCLEAR PLANT
FINAL SAFETY
ANALYSIS REPORT

PRESSURE DIFFERENTIAL ACROSS
THE PRESSURIZER VESSEL
(PRESSURIZER ENCLOSURE ANALYSIS)
figure 6.2.1-89

SCANNED DOCUMENT
THIS IS A SCANNED DOCUMENT MAINTAINED ON
THE WBNP OPTICRAPHICS SCANNER DATABASE

Figure 6.2.1-89 Pressure Differential Across The Pressurizer Vessel (Pressurizer Enclosure Analysis)

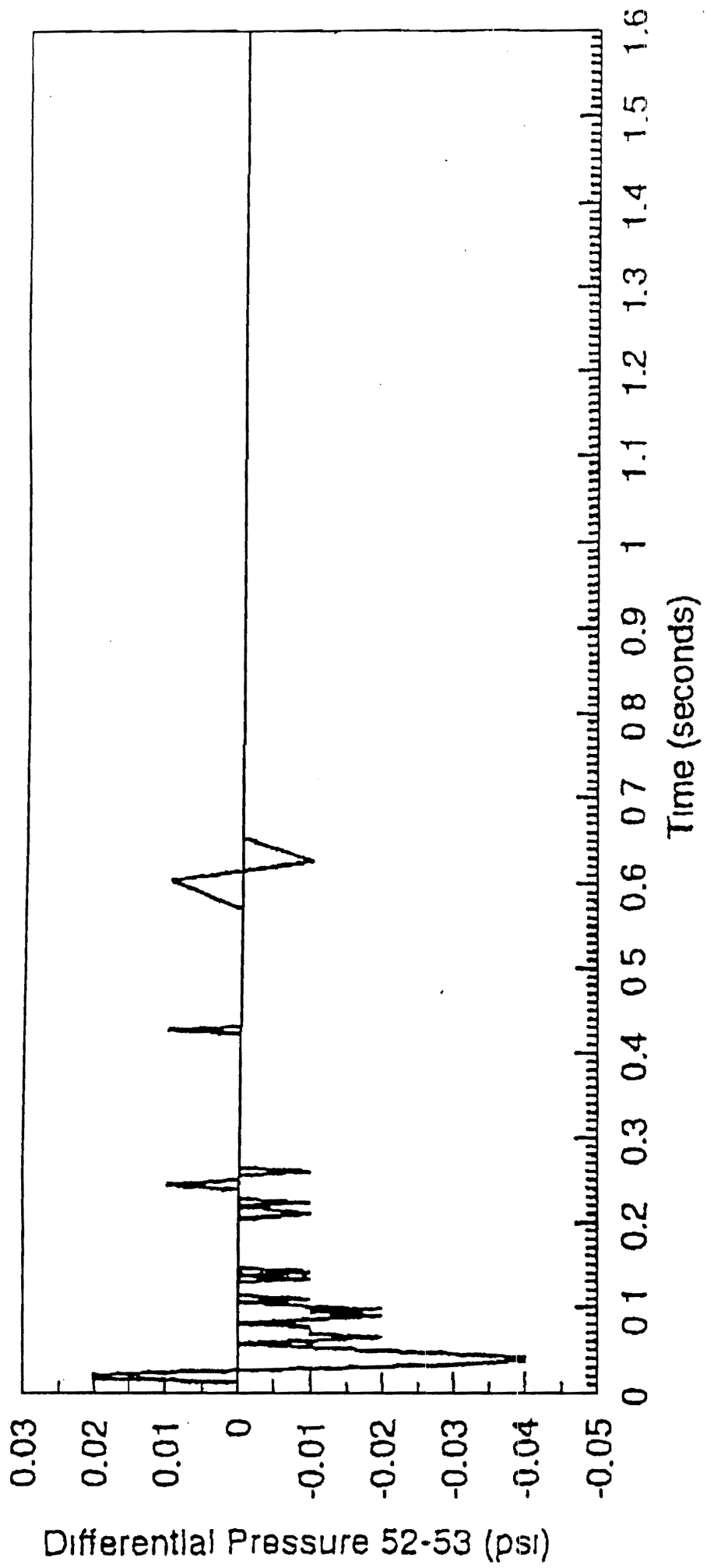

REVISED BY AMENDMENT 89

WATTS BAR NUCLEAR PLANT
FINAL SAFETY
ANALYSIS REPORT

PRESSURE DIFFERENTIAL ACROSS
THE PRESSURIZER VESSEL
(PRESSURIZER ENCLOSURE ANALYSIS)
figure 6.2.1-90

SCANNED DOCUMENT
THIS IS A SCANNED DOCUMENT MAINTAINED ON
THE WBNP OPTIGRAPHICS SCANNER DATABASE

Figure 6.2.1-90 Pressure Differential Across The Pressurizer Vessel (Pressurizer Enclosure Analysis)

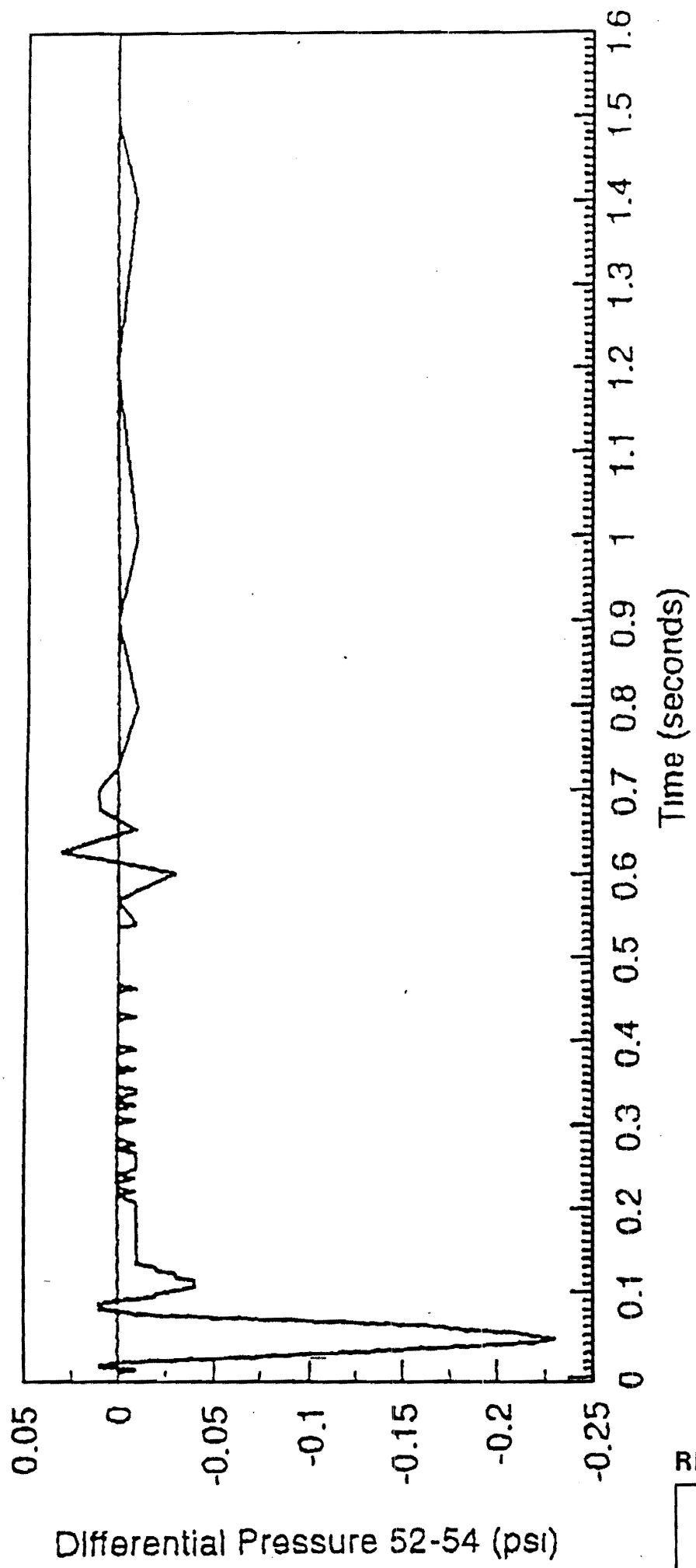

REVISED BY AMENDMENT 89

WATTS BAR NUCLEAR PLANT
FINAL SAFETY
ANALYSIS REPORT

PRESSURE DIFFERENTIAL ACROSS
THE PRESSURIZER VESSEL
(PRESSURIZER ENCLOSURE ANALYSIS)
figure 6.2.1- 91

SCANNED DOCUMENT
THIS IS A SCANNED DOCUMENT MAINTAINED ON
THE WBNP OPTIGRAPHICS SCANNER DATABASE

Figure 6.2.1-91 Pressure Differential Across The Pressurizer Vessel (Pressurizer Enclosure Analysis)

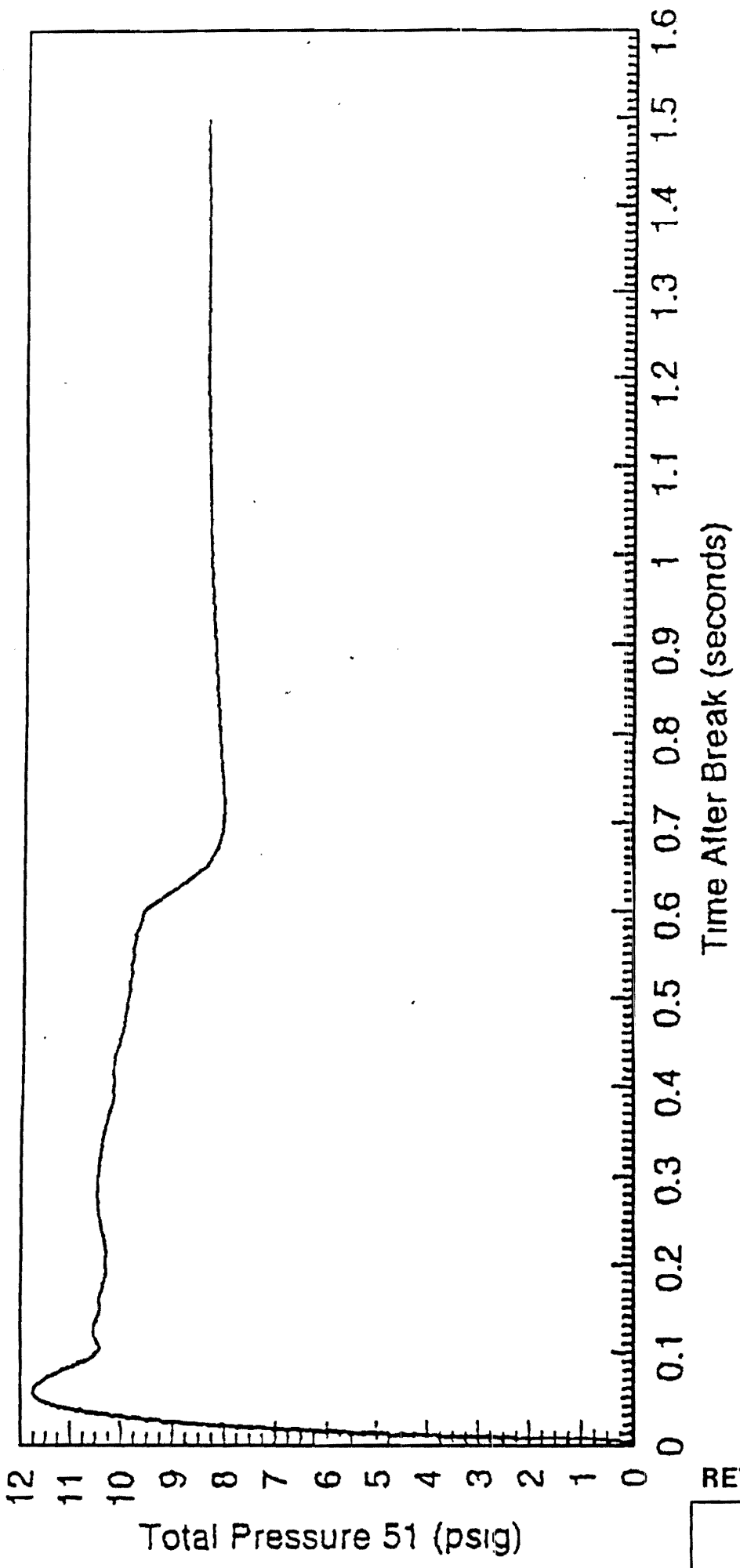

REVISED BY AMENDMENT 89

WATTS BAR NUCLEAR PLANT
FINAL SAFETY
ANALYSIS REPORT

PRESSURE VERSUS TIME
FOR THE BREAK ELEMENT
(PRESSURIZER ENCLOSURE ANALYSIS)
figure 6.2.1-92

SCANNED DOCUMENT
THIS IS A SCANNED DOCUMENT MAINTAINED ON
THE WBNP OPTIGRAPHICS SCANNER DATABASE

Figure 6.2.1-92 Pressure Versus Time For The Break Element (Pressurizer Enclosure Analysis)

THIS PAGE INTENTIONALLY BLANK

6.2.2 CONTAINMENT HEAT REMOVAL SYSTEMS

Adequate containment heat removal capability for the ice condenser reactor containment is provided by the ice condenser (Section 6.7), the air return fan system (Section 6.8), and two separae containment heat removal spray systems whose components operate in the sequential modes described in Section 6.2.2.2. One of these heat removal spray systems is the containment spray system, and the second is the residual heat removal spray system, which is a portion of the residual heat removal system (Section 6.3).

Minimum engineered safety feature performance of the containment heat removal systems is achieved with the following:

(1) Ice condenser (Section 6.7)

(2) One train of the air return fan system

(3) One train of the containment spray system

(4) One train of the residual heat removal spray system (not required for steam or feed line break)

Each spray system consists of two trains of redundant equipment per reactor unit. There are four spray headers per unit. Two headers are supplied from separate trains of the containment spray system; the other two are supplied by separate trains of the RHR spray system. Each individual train consists of a pump, a heat exchanger, appropriate control valves, required piping, and a header with nozzles located in the upper compartment of the containment with flow directed to obtain full coverage of the containment upper volume during an emergency. The systems use borated water supplied from the refueling water storage tank and/or the recirculation sump.

6.2.2.1 Design Bases

The primary design basis for the containment heat removal spray systems is to spray cool water into the containment atmosphere when appropriate in the event of a loss-of-coolant accident or secondary side break and thereby ensure that the containment pressure cannot exceed the containment shell maximum internal pressure of 15.0 psig at 250°F, which corresponds to the code design internal pressure of 13.5 psig at 250°F (see Section 3.8.2). This protection is afforded for all pipe break sizes up to and including the hypothetical instantaneous circumferential rupture of the reactor coolant loop resulting in unobstructed flow from both pipe ends. After the ice has melted, the containment spray system and the residual heat removal spray system become the sole systems for removing energy directly from the containment. The containment heat removal systems are designed to provide a means of removing containment heat without loss of functional performance in the post-accident containment environment and operate without benefit of maintenance for the duration of time to restore and maintain containment conditions at atmospheric pressure. Although the water in the core after a loss-of-coolant accident is quickly subcooled by the emergency core cooling system (Section 6.3), the design of heat removal capability of each

containment heat removal system is based on the conservative assumption that the core residual heat is released to the containment as steam which eventually melts all ice in the ice condenser.

The containment spray system provides two redundant heat removal trains. The system is designed such that both trains are automatically started by high-high containment pressure signal. The signal actuates, as required, all controls for positioning all valves to their operating position and starts the pumps. The operator can also manually actuate the entire system from the control room. Either of the two trains containing a pump, heat exchanger, and associated valving and spray headers is independently capable of delivering a minimum flowrate of 4,000 gpm.

The containment heat removal spray systems are designed to withstand the design basis earthquake and the operational basis earthquake without loss of function. They satisfy the TVA Class B Mechanical Requirements. The containment heat removal spray systems maintain their integrity and do not suffer loss of ability to perform their minimum required function due to normal operation, faults of moderate frequency, infrequent faults, and limiting faults.

Sufficient redundancy for all supporting systems necessary for minimum operational requirements of the containment heat removal spray systems is provided and complies with the single failure criteria for engineered safety features. Separate divisions on essential raw cooling water supply, power equipment heat exchangers, pumps, valves, and instrumentation are provided in order to have two completely separated trains.

The system is provided with overpressure protection from excessive pressures that could otherwise result from temperature changes, interconnection with other systems operating at higher pressures, or other means.

Those portions of the containment heat removal spray systems located outside of the containment which are designed to circulate, during post-accident conditions, radioactively contaminated water collected in the containment meet the following requirements:

(1) Shielding within guidelines of 10CFR20 and 10CFR100.

(2) Collection of discharges from pressure relieving devices.

(3) Remote means for isolating any sections under anticipated malfunction or failure conditions.

(4) Means to detect and control radioactivity leakage into the environs to limits consistent with guidelines set forth in 10CFR20 and 10CFR100.

During accident conditions, cooling of the containment spaces is provided by the ice condenser system, containment heat removal spray systems, and the air return system. In addition, during non-LOCA accidents, the lower compartment cooler (LCC) fans are utilized to recirculate air throughout the lower containment spaces to prevent hot pockets from developing. The LCC units operate continuously throughout all

accidents which do not initiate a containment Phase B isolation signal, as long as the cooling coils are intact and the ERCW supply to them is available. During or after a LOCA, the LCC units, including their fans, are not required to be operable. However, after a MSLB, at least two of the four LCC fans are started manually a minimum of 1-1/2 hours and a maximum of 4 hours after the MSLB to recirculate air throughout the lower containment spaces.

6.2.2.2 System Design

The containment spray systems consist of two separate trains of equal capacity with each train independently capable of meeting system requirements. This system can be supplemented with two residual heat removal system pumps and two residual heat exchangers in parallel, with associated piping, valves and individual spray headers in the upper containment volume. Each train includes a pump, heat exchanger, ring header with nozzles, isolation valves and associated piping, and instrumentation and controls. Partial flow from an RHR system pump through its associated heat exchanger can be used to supplement each train. Independent electrical power supplies are provided for equipment in each containment spray train. In addition each train is provided with electrical power from separate emergency diesel generators in the event of a loss of offsite electrical power. During normal operation, all of the equipment is idle and the associated isolation valves are closed. Upon system activation during a LOCA or other high energy line break, adequate containment cooling is provided by the containment spray systems whose components operate in sequential modes. These modes are: 1) spraying a portion of the contents of the refueling water storage tank into the containment atmosphere using the containment spray pumps; 2) after the refueling water storage tank has been drained, but while there is still ice remaining in the ice condenser, recirculation of water from the containment sump through the containment spray pumps, through the containment spray heat exchangers, and back to the containment (This spray is useful in reducing sump water temperatures.); 3) diversion of a portion of the recirculation flow from the residual heat removal system to additional spray headers. RHR spray operation is initiated manually by the operator only if the emergency core cooling system and containment spray system are both operating in the recirculation mode. If switchover to recirculation occurs prior to 1 hour after initiation of the LOCA, RHR spray operation can be commenced 1 hour after initiation of the LOCA. If switchover to recirculation occurs later than 1 hour after initiation of the LOCA, RHR spray operation can be commenced after completion of the switchover procedure.

The spray water from the containment and RHR spray systems returns from the upper compartment to the lower compartment through two 14 inch drains in the bottom of the refueling canal. The curbing around the personnel access door and the equipment access hatch on the operating deck directs spray water flow towards the refueling canal. The air-water mixture entering the air return fans will be rerouted inside the polar crane wall through the accumulator rooms utilizing curbing, the floor hatch cover and floor drainage system.

The flow diagram for this system is presented in Figure 6.2.2-1.

Component Description

Pumps

The containment spray system flow is provided by two centrifugal type pumps driven by electric motors. The motors, which can be powered either normally or from an emergency source are direct coupled and non-overloading to the end of the pump curve. The design head of the containment spray pump is sufficient to ensure rated capacity with a minimum level in the refueling water storage tank or the containment sump when pumping against a head equivalent to the sum of the maximum pressure of the containment post LOCA/HELB, the elevational head between the pump discharge and the uppermost spray nozzles, and the equipment and piping friction losses. Each pump is rated for 4000 gpm flow at a design head of 435 ft. See Table 6.2.2-1 for additional design parameters and Figure 6.2.2-2 for characteristic curves.

The residual heat removal pumps which also provide flow to the containment heat removal spray system are described in Section 5.5.7.2.1 and Table 5.5-8.

Each residual heat removal pump provides 2000 gpm for upper containment spray.

Each containment spray pump is powered by a horizontal squirrel cage induction motor. Pump motor parameters are presented in Table 6.2.2-1.

Net Positive Suction Head (NPSH)

The plant and piping layout of the containment spray system ensures that the pump NPSH requirements are met at maximum runout conditions with the containment spray pumps taking suction from either the refueling water storage tank or the containment sump. The NPSH available from the containment sump is calculated using the maximum credible sump water temperature (190°F) with no credit taken for containment overpressure or height of water in the containment sump.

Heat Exchangers

The containment spray heat exchangers are the vertical counter flow U-tube type with tubes welded to the tube sheet. Borated water from either the refueling water storage tank or the containment sump circulates through the tube side. Design parameters are presented in Table 6.2.2-2.

Piping

All containment heat removal spray system piping in contact with borated water is austenitic stainless steel. All piping joints are welded except for the flanged connection at the pump.

Spray Nozzles and Ring Headers

Each containment spray ring header provides 4000 gpm minimum and contains 263 hollow cone ramp bottom nozzles, each of which is capable of a design flow of 15.2 gpm with a 40 psi differential pressure. These nozzles have an approximately 3/8-inch diameter spray orifice and are not subject to clogging by particles less than 1/4 inch in

maximum dimension. The nozzles produce a mean drop size of approximately 700 microns in diameter at rated system conditions. The spray solution is completely stable and soluble at all temperatures of interest in the containment and, therefore, does not precipitate or otherwise interfere with nozzle performance. Each nozzle header is independently oriented to maximize coverage of the containment volume inside the crane wall. This arrangement prohibits any flow into the ice condenser.

The residual heat removal spray ring headers contain 147 nozzles per header and deliver 2000 gpm per header. They have the same design characteristics as the headers in the containment spray system.

Refueling Water Storage Tank

During the injection phase immediately following a LOCA or HELB, the containment spray is supplied from the refueling water storage tank.

Recirculation Sump

The recirculation sump is described in Section 6.3.2.2 under the discussion of the recirculation mode.

Material Compatibility

All parts of the containment spray system in contact with borated water are austenitic stainless steel or equivalent corrosion resistant material.

6.2.2.3 Design Evaluation

Performance of the containment heat removal system is evaluated through analyses of the design basis accident and various other cases described in Chapter 15 and Section 6.2.1. The analyses were performed using the LOTIC code and show that the containment heat removal systems are capable of keeping the containment pressure below the containment maximum internal pressure of 15 psig, which corresponds to the code design internal pressure of 13.5 psig at 250°F (see Section 3.8.2) even when it is assumed that the minimum engineered safety features are operating. Section 6.2.1 presents a description of the analytical methods and models which were used along with verification of pertinent items from Waltz Mill tests, and curves showing the calculated performance of important variables following the design-basis loss-of-coolant accident.

The design basis accident results in a required containment spray flow rate of 4000 gpm using 85°F constant temperature essential raw cooling water for the heat exchangers.

The containment spray systems provide two full-capacity heat removal systems for the containment, each of which is sized as described in Section 6.2.2.1 to remove heat at a rate which precludes an increase of the containment maximum internal pressure above 15.0 psig, which corresponds to the code design internal pressure of 13.5 psig at 250°F (see Section 3.8.2). All spray headers and spray nozzles are located inside the containment in the upper compartment and can withstand, without loss of function

or maintenance, the post-accident containment environment. The remainder of the systems, with the exception of the refueling water storage tanks, which includes all active components, are located in the Auxiliary Building and, therefore, are not affected by wind, tornado, or snow and ice conditions.

The design is based on the spray water being raised to the saturation temperature of the containment in falling through the steam-air mixture within the building. The minimum fall path of the droplets is approximately 75 ft from the spray ring headers to the operating deck. The actual fall path is longer due to the trajectory of the droplets sprayed out from the ring header nozzles. Figures 6.2.2-3 through 6.2.2-6 depict the containment spray coverage for the containment spray system.

Except for the refueling water storage tank water supplied by the safety injection system, the containment spray system initially operates independently of other engineered safety features. For extended operation in the recirculation mode, water is supplied to the containment RHR spray headers through the residual heat removal pumps and residual heat removal exchangers. One containment spray system train, supplemented by one RHR spray train, when required, provides adequate heat removal capability to limit containment pressure below design (see Section 6.2.1.3). RHR spray is required only after switchover to the recirculation mode and no earlier than 1 hour after initiation of the LOCA. At this time one RHR pump can provide sufficient RHR spray as well as adequate core flow via the high head (one centrifugal charging and one safety injection) pumps. (See Section 6.3.3 for the performance evaluation of the RHR pumps in their core cooling function.)

All active components of the system were analyzed to show that the failure of any single active component does not prevent fulfilling the design function. This analysis is summarized in Table 6.2.2-3. A single failure in the residual heat removal system will not prevent long-term use of the spray system. The analyses of the loss-of-coolant accident presented in Chapter 15 reflect the single failure analysis. Each of the spray trains provides complete backup for the other.

An analysis of the spray return drains located in the refueling canal has been made to show that they are adequately sized for a maximum RHR and containment spray flow and ensures an adequate water supply in the lower compartment to satisfy pump NPSH requirements. It was shown that a water head of 4.16 feet between the refueling canal and the sump is sufficient to establish a steady-state drainage between the upper and lower compartment.

The passive portions of the spray systems located within the containment are designed to withstand, without loss of functional performance, a post accident containment environment and to operate without benefit of maintenance.

The spray headers which are located in the upper containment volume are separated from the reactor and primary coolant loops by the operating deck and inner wall of the ice bed. These spray headers are therefore protected from missiles originating in the lower compartment.

This evaluation shows that the containment spray systems can withstand expected conditions during the 40-year life of the plant without loss of capability to perform the required safety functions. Specifically, the system achieved this by having been designed to meet applicable General Design Criteria (GDC) as follows:

(1) The systems can withstand the effects of natural phenomena as required by GDC 2.

(2) The systems are designed to accommodate the effects of and be compatible with the environmental conditions associated with normal operation, maintenance, testing, and postulated accidents including loss of coolant as required by GDC 4.

(3) The systems are not shared with another nuclear power unit as required by GDC 5.

(4) The systems are designed to be capable of being inspected and tested to ensure reliability throughout their life as required by GDC 39 and 40.

(5) The systems are designed adequately to provide post-accident cooling inside the primary containment to reduce the containment pressure and temperature following any LOCA and maintain them at acceptable levels, as required by GDC 38.

(6) The systems are designed to aid in the control and removal of fission products, hydrogen, oxygen, and other substances which may be released into the reactor containment following postulated accidents to assure that containment integrity is maintained, as required by GDC 41.

6.2.2.4 Testing and Inspections

Performance tests of the active components in the system are performed in the manufacturer's plant and followed by in-place preoperational testing.

Capability is provided to test initially and subsequently on a routine basis to the extent practical the operational startup sequence and performance capability of the containment spray system including the transfer to alternate power sources. Capability to test periodically the delivery capacity of the containment spray system at a position as close to the spray header as is practical and for obstruction of the spray nozzles is provided. As part of the preoperational test program, the containment spray nozzles are physically verified to pass an unobstructed flow of air. The air is introduced into the headers through an air test connection on each header.

Initially, the containment spray system is hydrostatically tested to the applicable code test pressure.

All periodic tests of individual components or the complete containment spray system are controlled to ensure that plant safety is not jeopardized and that undesirable transients do not occur.

The containment spray system is designed to comply with ASME Section XI, "Inservice Inspection of Nuclear Reactor Coolant System." Detailed test procedures are given in Chapter 14.

6.2.2.5 Instrumentation Requirements

The containment spray system is actuated either manually from the control room or external to the main control room or automatically by the coincidence of two sets out of four protection set loops monitoring the lower containment pressure. The high-high containment pressure signal starts the containment spray pumps and positions all valves to their operating configuration.

The operation of the containment spray system is verified by instrument readout in the control room. Pump motor breakers energize indicating lights on the control panel to show power is being supplied to the pump motors. Status lights on the main control panel indicate valve position and are energized independently of the valve actuation signal.

To protect the pumps from low flow conditions, a mini-flow recirculation line is provided to allow pump discharge to be circulated back into the pump suction line. This line is opened by a motor-operated valve when flow in the discharge line drops below that required for pump protection or if, upon starting, flow is not achieved in the spray header within a preset time interval. Elbow taps in each discharge line provide a delta-p measurement to monitor the flow rate and provide the flow signal for the control room flow indicators and to control the minimum flow recirculation valve.

Local instruments monitor the following parameters: containment spray pump suction and discharge pressure, heat exchanger inlet temperature, heat exchanger inlet and outlet pressure, and containment spray test line flow.

In the event of a main control room evacuation, the necessary control functions are transferable to outside of the main control room in order to assure that the system can be aligned and locked to prevent inadvertent operation and to manually initiate system operation if necessary. The control transfer is provided for the spray pumps, containment spray isolation valves, and containment sump isolation valves.

The system is designed as Seismic Category I. The instrumentation and associated interconnected wiring and cables are physically and otherwise separated so that a single event cannot cause malfunction of the entire system.

6.2.2.6 Materials

All parts of the containment spray system in contact with borated water are austenitic stainless steel or equivalent corrosion-resistant material. None of these materials produce radiolytic or pyrolytic decomposition products that can interfere with this or other engineered safety features.

Table 6.2.2-1 CONTAINMENT SPRAY PUMP/MOTOR DESIGN PARAMETERS

Pump	
Quantity Per Unit	2
Design Pressure, psig	300
Design Temperature, °F	250
Design Flow Rate, gpm	4000
Design Head, ft	435
Motor	
Horsepower, hp	700
Service Factor	1.15
Voltage, V	6600
Phase	3
Cycles, Hz	60

Table 6.2.2-2 Containment Spray Heat Exchanger Design Parameters

Quantity Per Unit	2
Type	Counter Flow
Percent Tubes Plugged	10%
Heat Transfer Per Unit, Btu/hr	12.85×10^7
Shell-Side Flow, gpm	5,200
Tube-Side Flow, gpm	4,000
Tube-Side Inlet Temperature, °F	190
Shell-Side Inlet Temperature, °F	85
Tube-Side Outlet Temperature, °F	124.7
Shell-Side Outlet Temperature, °F	129.5
Design Pressure (Shell/Tube), psig	150/300
Design Temperature (Shell/Tube), °F	200/250
Heat Exchanger UA, Btu/hr-°F	2.74×10^6

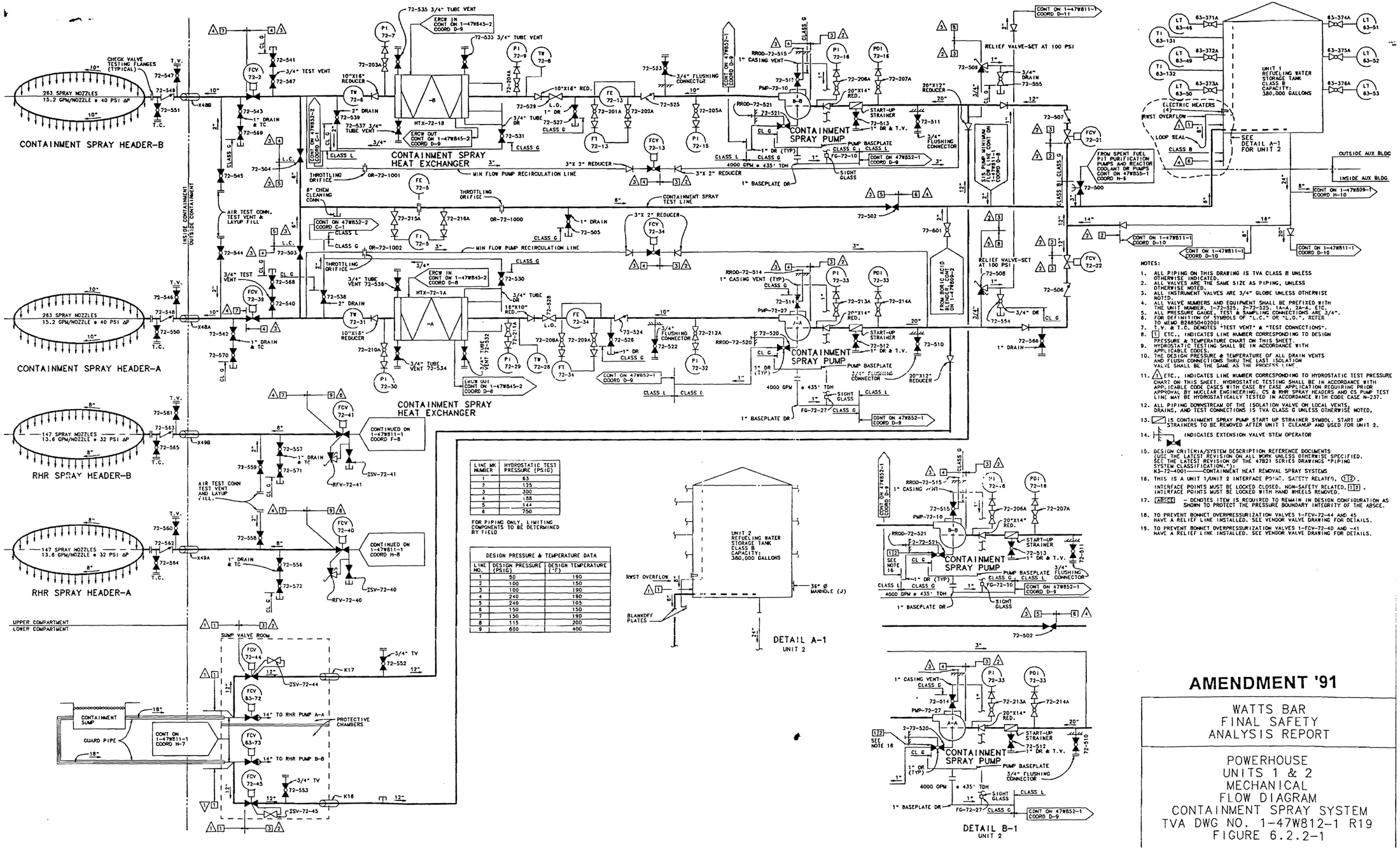

LINE MK NUMBER	HYDROSTATIC TEST PRESSURE (PSIG)
1	63
2	125
3	300
4	138
5	144
6	750

FOR PIPING ONLY. LIMITING COMPONENTS TO BE DETERMINED BY FIELD

DESIGN PRESSURE & TEMPERATURE DATA

LINE NO.	DESIGN PRESSURE (PSIG)	DESIGN TEMPERATURE (°F)
1	50	190
2	100	150
3	100	190
4	240	190
5	240	105
6	150	150
7	150	190
8	115	200
9	600	400

Figure 6.2.2-1 Powerhouse Units 1 & 2 Mechanical Flow Diagram Containment Spray System

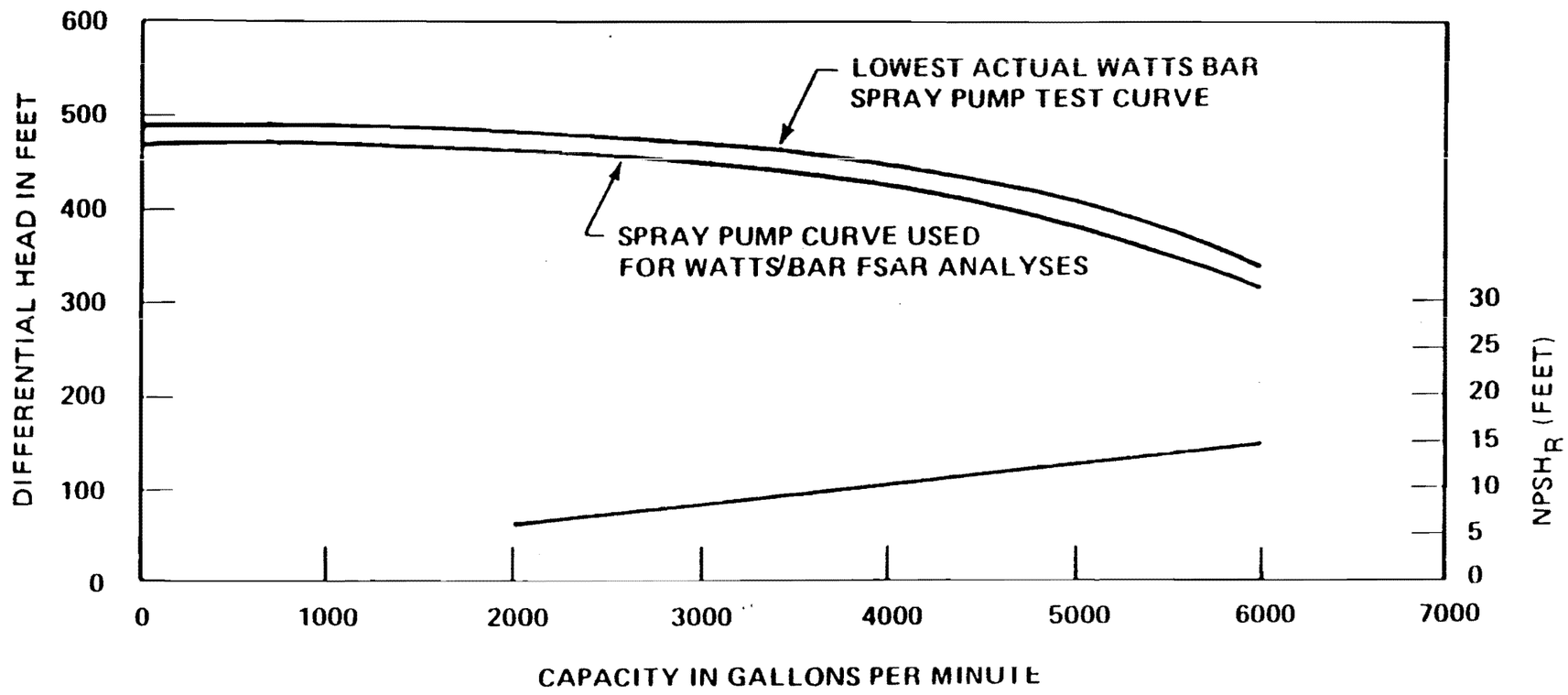

Figure 6.2.2-2 Containment Spray Pump Performance Curves

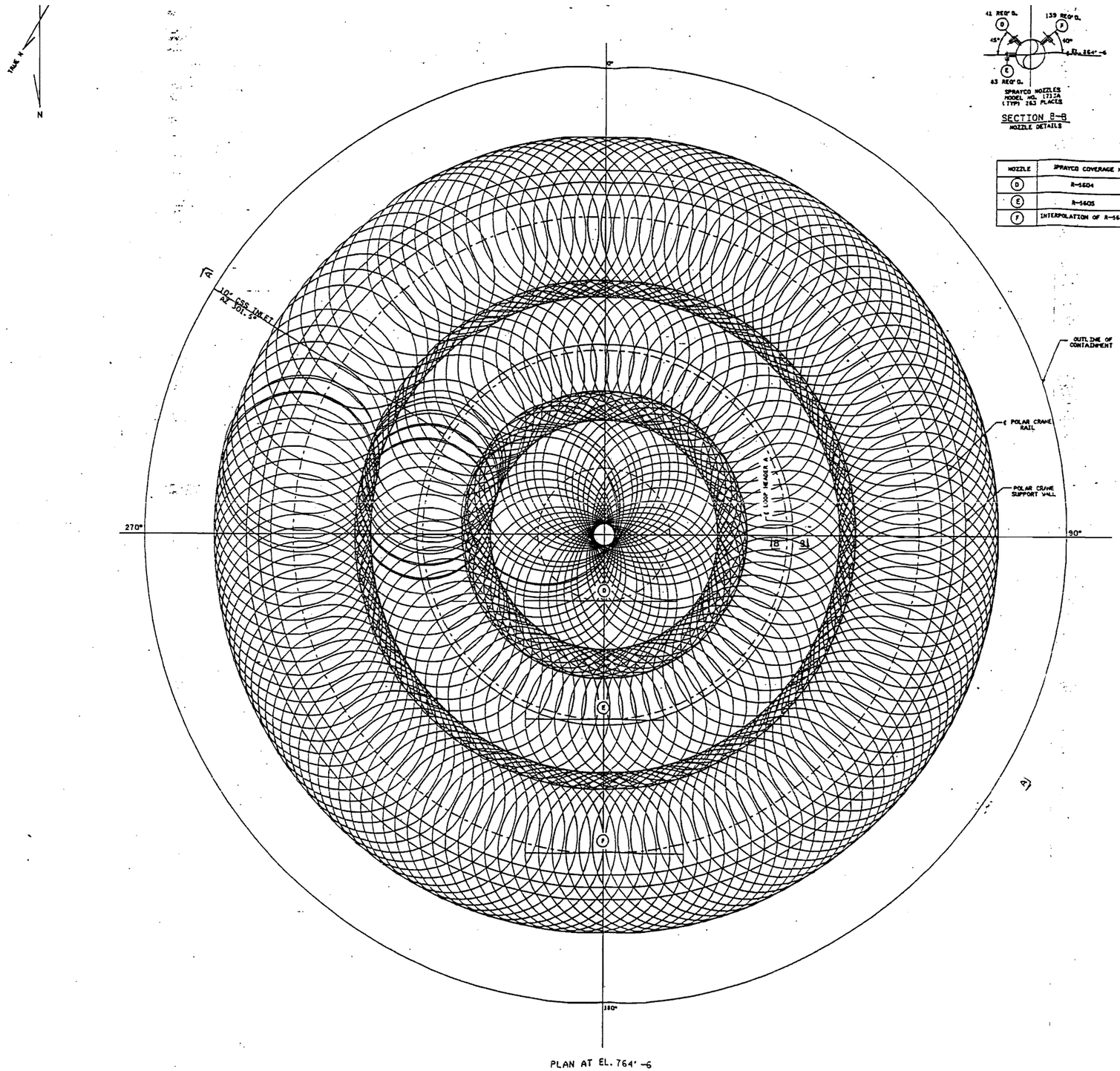

SECTION B-B
NOZZLE DETAILS

NOZZLE	SPRAYCO COVERAGE NO.	DIAMETER OF SPRAY AT A 100 FEET OF ELEVATION
D	R-5604	21'-0
E	R-5605	13'-0
F	INTERPOLATION OF R-5604 & R-5572	21'-5

NOTES:

1. BASED ON A MOST LOCA TEMPERATURE OF 161°, A MULTIPLIER OF 0.90 WAS USED TO DERIVE THE FINAL SPRAY DIAMETERS PER WESTINGHOUSE CS SPRAY NOZZLE AND HEADER DESIGN CRITERIA FIG 7 - SPRAY ENVELOPE REDUCTION FACTOR.

REFERENCE DRAWINGS:

MECHANICAL CONTAINMENT SPRAY SYSTEM PIPING	47W437-5 R13
EQUIPMENT REACTOR BUILDING	47W200-12 R7
EQUIPMENT REACTOR BUILDING	47W200-13 R4
EQUIPMENT REACTOR BUILDING	47W200-14 R4
ENVIRONMENTAL DATA UPPER CONTAINMENT	47W235-41 R3

Amendment 71

WATTS BAR NUCLEAR PLANT
FINAL SAFETY
ANALYSIS REPORT

REACTOR BLDGS. UNITS 1 & 2
MECHANICAL
CONTAINMENT SPRAY SYSTEM PIPING

Figure 6.2.2-3 Reactor Bldgs. Units 1 & 2 Mechanical Containment Spray System Piping Plan of Spray Patterns From C.S. Loop Header A

Security Information Withheld under 10CFR 2.390(d)(1)

[s5]

[redacted]

SECURITY SENSITIVE

Figure 6.2.2-4 Powerhouse-Auxiliary & Reactor Bldgs Units 1 & 2 Mechanical Containment Spray System Piping

[e5]

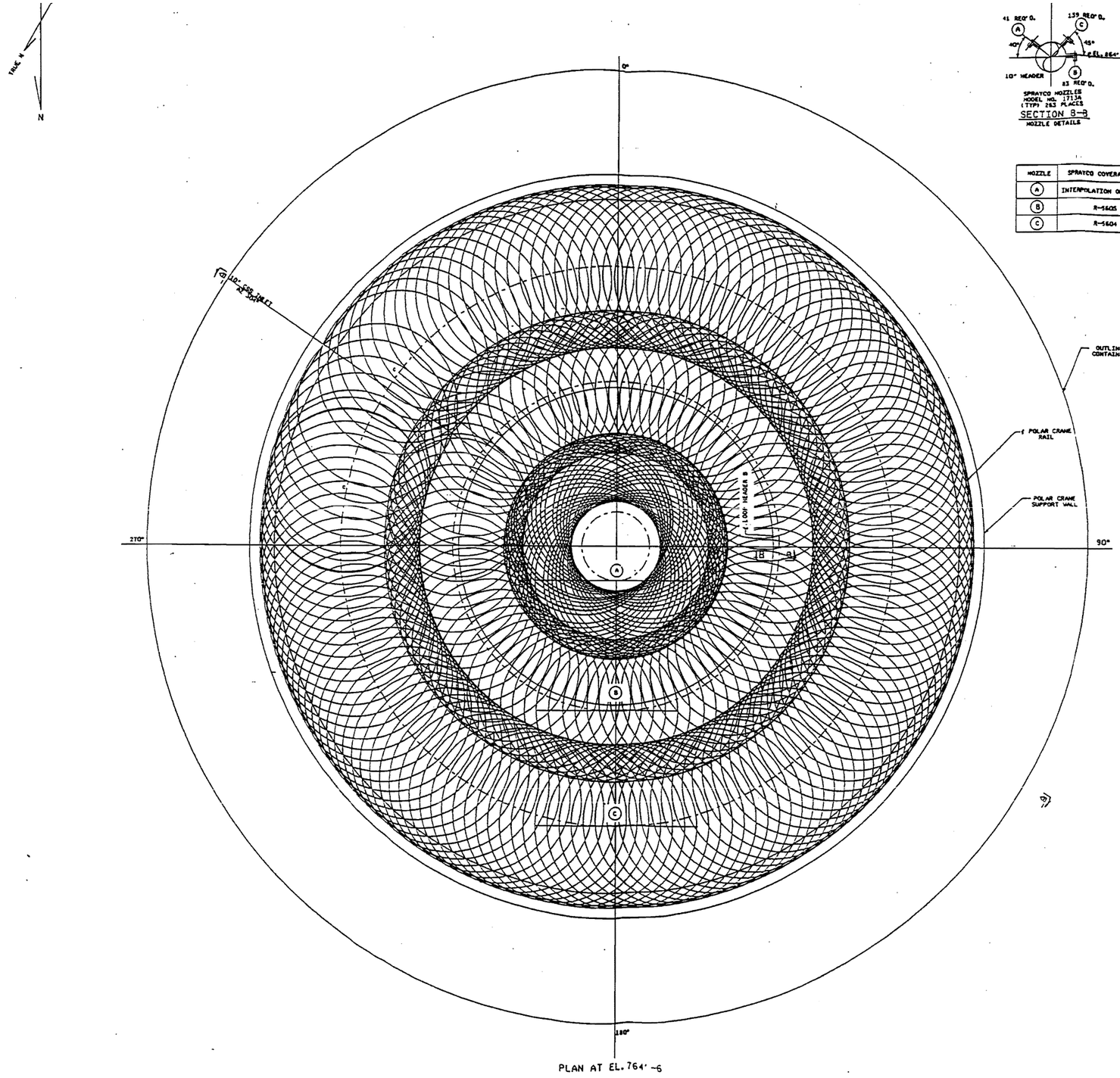

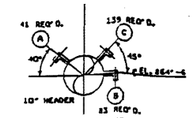

SPRAYCO NOZZLES
MODEL NO. 17134
(TYP) 283 PLACES

SECTION B-B
NOZZLE DETAILS

NOZZLE	SPRAYCO COVERAGE NO.	DIAMETER OF SPRAY AT A 100 FEET OF ELEVATION
A	INTERPOLATION OF R-5604 & R-5572	21'-5
B	R-5605	19'-0
C	R-5604	21'-0

NOTES:

1. BASED ON A POST LOCA TEMPERATURE OF 151° A MULTIPLIER OF 0.90 WAS USED TO DERIVE THE FINAL SPRAY DIAMETERS. PER WESTINGHOUSE "S-SPRAY NOZZLE AND HEADER DESIGN CRITERIA FIG 7 - SPRAY ENVELOPE REDUCTION FACTOR.

REFERENCE DRAWINGS:

MECHANICAL CONTAINMENT SPRAY SYSTEM PIPING	47W437-5 R13
EQUIPMENT REACTOR BUILDING	47W200-12 R7
EQUIPMENT REACTOR BUILDING	47W200-13 R4
EQUIPMENT REACTOR BUILDING	47W200-14 R4
ENVIRONMETAL DATA UPPER CONTAINMENT	47W235-41 R3

Amendment 71

WATTS BAR NUCLEAR PLANT
FINAL SAFETY
ANALYSIS REPORT

REACTOR BLDGS. UNITS 1 & 2
MECHANICAL
CONTAINMENT SPRAY SYSTEM PIPING

Figure 6.2.2-5 Reactor Blogs. Units 1 & 2 Mechanical Containment Spray System Piping Plan of Spray Patterns From C.S. Loop Header B

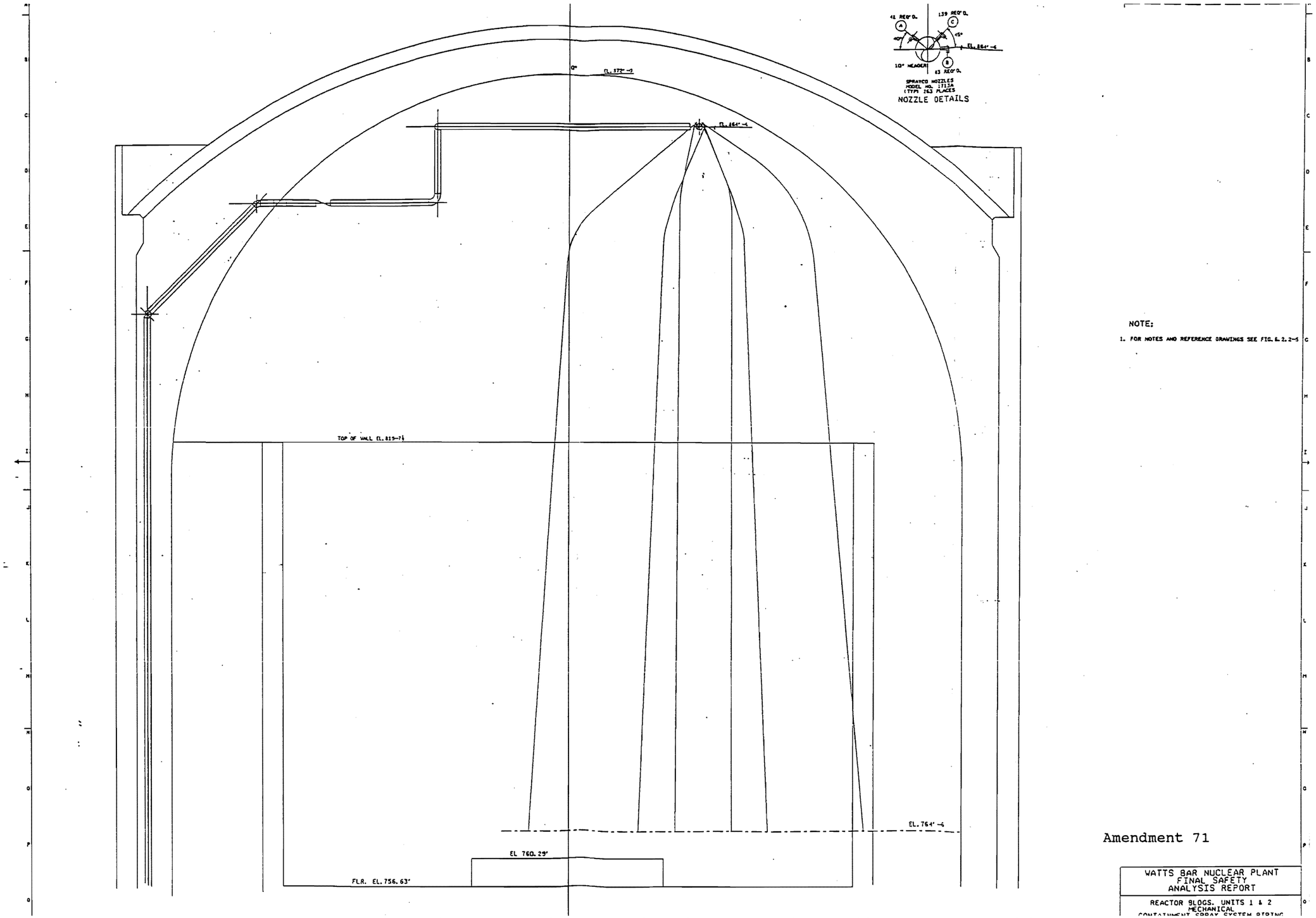

Figure 6.2.2-6 Reactor Bldgs. Units 1 & 2 Mechanical Containment Spray System Piping Section of Spray Patterns From C.S. Loop Header B

6.2.3 Secondary Containment Functional Design

Structures included as part of the secondary containment system are the Shield Building of each reactor unit, the Auxiliary Building, and the Condensate Demineralizer Waste Evaporator (CDWE) Building. Depending on the configuration of the plant, the Primary Containment Building of a unit may also be included as a structure which is part of the secondary containment system. This condition exists when the primary containment is open to the Auxiliary Building. Primary containment may be open to the Auxiliary Building during cold shutdown or refueling, and also during the construction phase of Unit 2. The areas within the auxiliary building secondary containment enclosure (ABSCE) boundary at a minimum include the Auxiliary Building and CDWE Building and additionally include the annulus and primary containment of each unit for plant configurations during which these areas are open to the Auxiliary Building. The emergency gas treatment system (EGTS) is provided for ventilation control and cleanup of the atmosphere inside the annulus between the Shield Building and the Primary Containment Building of each reactor unit. The auxiliary building gas treatment system (ABGTS) provides a similar contamination control capability in the ABSCE.

6.2.3.1 Design Bases

6.2.3.1.1 Secondary Containment Enclosures

Design bases for the secondary containment structures were devised to assure that an effective barrier exists for airborne fission products that may leak from the primary containment during a loss-of-coolant accident (LOCA). Within the scope of these design bases are requirements that influence the size, structural integrity, and leak tightness of the secondary containment enclosure. Specifically, these include a capability to: (a) maintain an effective barrier for gases and vapors that may leak from the primary containment during all normal and abnormal events; (b) delay the release of any gases and vapors that may leak from the primary containment during a LOCA; (c) allow gases and vapors that may leak through the primary containment during a LOCA to flow into the contained air volume within the secondary containment where they are diluted, held up, and purified prior to being released to the environs; (d) bleed to the secondary containment each air-filled containment penetration enclosure which extends beyond the Shield Building and which is formed by automatically actuated isolation valves; (e) maintain an effective barrier for airborne radioactive contaminants, gases, and vapors originating in the Auxiliary Building during all normal and abnormal events.

Refer to Sections 3.8.1 and 3.8.4 for further details relating to the design of the Shield Building and the Auxiliary Building.

6.2.3.1.2 Emergency Gas Treatment System (EGTS)

The design bases for the EGTS are:

(1) To keep the air pressure within each Shield Building annulus below atmospheric pressure at all times in which the integrity of that particular containment is required.

(2) To reduce the concentration of radioactive nuclides in annulus air that is released to the environs during a LOCA in either reactor unit to levels sufficiently low to keep the site boundary and low population zone (LPZ) dose rates below the 10 CFR 100 values.

(3) To withstand the safe shutdown earthquake.

(4) To provide for initial and periodic testing of the system capability to function as designed.

6.2.3.1.3 Auxiliary Building Gas Treatment System (ABGTS)

The design bases for the ABGTS are:

(1) To establish and keep an air pressure that is below atmospheric within the portion of the buildings serving as a secondary containment enclosure during accidents.

(2) To reduce the concentration of radioactive nuclides in air releases from the secondary containment enclosures to the environs during accidents to levels sufficiently low to keep the site boundary and LPZ dose rates below the 10 CFR 100 guideline values.

(3) To minimize the spreading of airborne radioactivity within the Auxiliary Building following an accidental release in the fuel handling and waste packaging areas.

(4) To withstand the safe shutdown earthquake.

(5) To provide for initial and periodic testing of the system capability to function as designed.

6.2.3.2 System Design

6.2.3.2.1 Secondary Containment Enclosures

(1) Shield Building

The principal components that function collectively to form a secondary containment barrier around the steel primary containment vessel are the Shield Building itself, the Shield Building penetration seals, the isolation valves installed in the penetrations to the Shield Building, and the Shield Building penetration leakoff facilities.

Structure

The Shield Building is a reinforced concrete structure that encloses the reactor's steel primary containment structure; it has a circular horizontal cross section and a shallow domed roof. The vertical center line of this building is also the vertical center line of the steel primary containment vessel. The inside diameter of this building was sized to provide an annular shaped air space between the two reactor enclosures that is five feet wide. The total enclosed free air space between the two enclosures is approximately 396,000 cubic feet. Additional data on the Shield Building is provided in Section 3.8.1 and in Table 6.2.3-1.

Penetrations

To ensure that the Shield Building provides a nearly leak tight enclosure for the primary containment structure all openings in the shield building penetrations are sealed. Typical mechanical piping or ventilation penetrations are equipped with a flexible membrane seal as shown in Figure 6.2.3-1. The leakage rate for mechanical penetrations is no greater than 0.0052 cfm per square inch when secondary containment is at a minus 0.5 inch water gauge. The primary containment personnel hatch passes through the Shield Building and opens directly to the Auxiliary Building. This opening in the Shield Building wall is handled as an ordinary piping penetration and is provided with a flexible, double membrane seal as shown in Figure 3.8.2-5 (see Section 3.8.2). Personnel and equipment access doors to the secondary containment are treated as special cases and are provided with resilient seals as shown in Figures 3.8.4-21 through 3.8.4-23. (See Section 3.8.4 for descriptions of the personnel access doors and the equipment access doors.) The allowable leakage for each personnel access door is 0.5 cfm when secondary containment is at minus 1 inch water gauge, and 60 cfm for the equipment access hatch when secondary containment is at minus 0.75 inch water gauge.

Air filled lines which must be isolated by automatic valve actuation and which penetrate both the primary containment and the shield building are considered more likely to pass airborne radioactivities than other lines. Therefore these lines are provided with a third isolation valve outside the secondary containment for additional leak protection. This single, third valve receives both Train A and B actuation signals. Electronic buffering prevents an electrical failure in one train from affecting the performance of the other. To enhance the effectiveness of the third isolation valve as a barrier to leakage, the enclosed volume between the second and third isolation valves is opened to the annulus during isolation. Opening this enclosed space to the annulus is accomplished with leakoff facilities as shown in Figure 6.2.3-2. This allows the negative pressure in the annulus to include this small volume, and leakage from the primary containment outward or leakage from outside the Shield Building inward is drawn into the annulus for processing. The lines provided with this feature are those for the primary containment purge supply and exhaust and the lower compartment pressure relief.

Electrical penetrations are of either a cable tray/cable slot type or a conduit type. Typical seals for these penetrations are shown in Figure 6.2.3-3. For cable tray/cable slot penetrations, silicone room temperature vulcanizing (RTV) foam is used as the sealant around cables within the wall opening over a portion of the length of the cable slot penetration. In conduit penetrations, the interstitial spaces between cables and conduit or condulet walls are filled with RTV silicone rubber as the sealant over a portion of the length of the penetration. The leakage rate for electrical penetrations is limited to 0.014 cfm per square inch when secondary containment is at a minus 0.5 inch water gauge.

The total expected infiltration rate across all leakage paths into the annulus is 250 cfm at the post accident annulus control setpoint. During normal operation the annulus is maintained at a negative pressure of 5.0 inches water gauge with respect to the outside atmosphere. Periodic tests demonstrate that inleakage is less than this value.

The fraction of primary containment leakage which may bypass the Shield Building and go directly to the Auxiliary Building is specified to be no greater than 25% of the total primary containment out-leakage. Permitting this leakage fraction results in acceptable site boundary and LPZ doses for the LOCA condition as described in Chapter 15. There are no paths by which primary containment leakage may bypass both the Shield Building and the Auxiliary Building.

Information concerning isolation features utilized in support of the secondary containment is presented in Section 6.2.4. Potential leakage paths by which primary containment leakage could bypass the secondary containment, and measures utilized to prevent such leakage are also discussed in Section 6.2.4.

(2) Auxiliary Building

Structure

The Auxiliary Building is a conventional reinforced concrete structure located between the Reactor Building and the Control Building as shown in Figures 1.2-4 through 1.2-10. Its basic functions are to house support and safety equipment for the primary steam system and to provide an isolation barrier during certain postulated accidents involving airborne radioactive contamination. Certain of the buildings interior and exterior walls, floor slabs, and a part of its roof form the isolation barrier as shown in Figures 6.2.3-4 through 6.2.3-10. The enclosed volume is approximately 6.9×10^6 cubic feet. The only openings in the isolation barrier are sealed mechanical and electrical penetrations or air locks. The building itself is by design and construction virtually leak tight. Additional data on the Auxiliary Building is provided in Section 3.8.4 and Table 6.2.3-1.

The accident situations for which the Auxiliary Building isolation barrier serves as the containment barrier are those involving irradiated fuel within the

confines of the building and spills or leaks of radioactive materials from tanks and process lines inside the building. During a LOCA, the Auxiliary Building isolation barrier serves as part of the secondary containment enclosure for situations when any through-the-line leakage from primary containment bypasses the Shield Building and enters the Auxiliary Building.

Penetrations

Mechanical and electrical penetration seals in the isolation barrier are similar to those for the Shield Building. Other potential leakage paths into the Auxiliary Building are ventilation openings and equipment and personnel access points.

Auxiliary Building ventilation supply and exhaust ducts except those for the ABGTS are provided with two low leakage isolation dampers in series. These two isolation dampers are heavy duty with resilient seals along the blade edges. The dampers are air-operated and fail in the closed position upon loss of power.

Entrances and exits to those portions of the Auxiliary Building within the containment barrier for both equipment and personnel are through air locks. The air lock locations are shown in Figures 1.2-3 and 1.2-5. The doors in each air lock are electrically interlocked such that only one side of the air lock can be opened at a time. Local and control room alarms are provided should both sides of an air lock ever be opened simultaneously. As a safety precaution, an interlock defeat switch is mounted on the containment side of each air lock to allow emergency egress should either side of the air lock be blocked open in an accident. The railway access doors and hatches are described in Section 3.8.4.

A special case is the interlock system for the large exterior door to the railway loading area. The large door is treated as one side of the air lock and either the two doors leading to the fuel handling area or the railway access hatch covers above can act as the other side of the lock. When the large railroad door is open, neither of the doors to the fuel handling area nor the access hatches above can be opened, and when either of these two doors and either of the access hatches above are open, the large railway access door cannot be opened. These doors are also provided with local and main control room alarms should both sides of the air lock ever be opened simultaneously. The total permissible leakage rate for the ABSCE at a pressure of -0.25 inches water gauge with respect to the outside is 9300 cfm maximum. This represents 165.5% of the ABSCE free volume per day. Periodic tests demonstrate that inleakage is less than the design value. Any improvement in the inleakage recorded during subsequent test, shall be used to establish the allowable margin for breaching permits.

(3) Auxiliary Building Secondary Containment Enclosure

The Auxiliary Building secondary containment enclosure (ABSCE) is that portion of the Auxiliary Building and CDWE Building (and for certain configurations, the annulus and primary containment, as discussed below) which serves to maintain an effective barrier for airborne radioactive contaminants released in the auxiliary building during abnormal events. Mechanical and electrical penetrations of this enclosure are

provided with seals to minimize infiltration. Piping penetrations are either analyzed to pressure boundary retention requirements, or the effects of their failure are demonstrated not to impair the ability of the ABGTS system to maintain the ABSCE under the required negative pressure of 0.25 inches w.g., or they are isolated by physical means (e.g., locked-closed valves, etc.) Airlock-type doors are provided at portals where needed by the frequency of use. A negative pressure is maintained within the ABSCE to ensure that no contaminated air is released to the environs following an abnormal event without first being processed by the auxiliary building gas treatment system (ABGTS). The ABSCE is shown in Figures 6.2.3-4 though 6.2.3-10.

During periods when the primary containment and annulus of a unit are open to the Auxiliary Building, the ABSCE also includes the primary containment and the annulus of that unit. During this condition, operator action is taken to ensure that the purge air ventilation system is shutdown. During the construction phase of Unit 2, the Unit 2 primary containment and annulus are always open to the ABSCE with the Unit 2 containment purge system physically isolated from the outside environment by means of locked-closed isolation dampers and valves.

Doors and penetrations of the ABSCE perimeter are provided with seals to reduce infiltration. Doors entering the area are either locked or under administrative control.

Automatic redundant isolation dampers are provided in ducts which pass from areas inside the ABSCE to areas outside of the enclosure. These permit isolation of the ABSCE and allow the ABGTS to maintain a negative pressure in the area following an abnormal event.

The ABGTS maintains a negative pressure with respect to the outside in the ABSCE during emergency operation and processes all Auxiliary Building exhaust. Either train of the ABGTS may be used to maintain the negative pressure and treat air exhausted from the ABSCE.

Isolation of the ABSCE is initiated by a Phase A containment isolation signal, a high radiation signal from the fuel handling area radiation monitors, or a high temperature in the Unit 1 outside air intakes for the Auxiliary Building. Any one of these signals automatically starts the ABGTS and closes all isolation dampers in the ABSCE boundary.

The annulus vacuum control subsystem continues to operate whenever the ABSCE is isolated, except for a Phase A containment isolation signal. A Phase A containment isolation signal which is generated by a LOCA starts the air cleanup subsystem of the emergency gas treatment system. Calculations have shown that this condition does not result in exceeding the limits given in 10 CFR 100. For additional description of the annulus vacuum control subsystem of the EGTS, see Section 6.2.3.2.2.

Proper actuation of the isolation dampers associated with the ABSCE and operation of the ABGTS is confirmed during preoperational testing.

6.2.3.2.2 Emergency Gas Treatment System (EGTS)

The EGTS is shown schematically in Figure 6.2.3-11. The logic and control diagrams for this system are shown in Figures 6.2.3-12 to 6.2.3-15. This system has two subsystems; one is the annulus vacuum control subsystem and the other is the air cleanup subsystem. The portions of the EGTS necessary to ensure that the system performs its functions during post-accident operation are classified Seismic Category I. Portions of the system which are not necessary for post-accident operation are seismically qualified to the extent that the system is not adversely affected if they should fail due to the seismic event; that is, they are qualified Seismic Category I(L).

Annulus Vacuum Control Subsystem

The annulus vacuum control subsystem is a fan and duct network used to establish and keep a negative pressure level within the annular space between the two reactor containment structures. It is utilized during normal operations in which containment integrity is required. In emergencies in which containment isolation is required, this subsystem is isolated and shut down. Under such an operating condition, this subsystem performs no safety-related function after the need for containment isolation has been established. Because of this, the annulus vacuum control subsystem is not classified as an engineered safety feature.

This subsystem has two independently controlled branches. Each branch serves one reactor unit. These branches draw air from their assigned annuli and release it into the Auxiliary Building exhaust duct system. The air inlet for each branch is centrally located in the secondary containment volume above the steel containment dome. During the interim period when Unit 2 is under construction, the Unit 2 annulus vacuum control subsystem is isolated from the Unit 1 subsystem by means of blank-off plates located at the fan discharge.

Air pressure control in each secondary containment annulus is achieved with a redundant fan, differential pressure sensor, motor operated damper and control circuitry installation incorporated into each branch. This equipment provides a capability to vary the volumetric flow rate drawn from the annulus to keep the pressure at a predetermined negative pressure level. This control function is accomplished with a modulating damper under control of a differential pressure sensor that adjusts the amount of outside air introduced upstream of a constant capacity fan in the proper manner to keep the annulus pressure within a designated narrow range. Two independent installations of these items are provided to promote operational efficiency. One of the two is utilized as a standby redundant unit that starts automatically in the event the operating control unit fails to function in the proper manner.

The fans and flow control dampers serving both reactor secondary containment annuli are installed in an Auxiliary Building room at elevation 757' adjacent to the Unit 2 Shield Building.

The nominal negative pressure for each annulus vacuum control equipment installation is 5-inches of water gauge below atmospheric. The negative pressure level chosen for normal operation ensures that the annulus pressure will not reach positive

values during the annulus pressure surge produced by a LOCA in the primary containment. Two 100% capacity fans per reactor unit are utilized to maintain this negative pressure. One fan per unit is normally on standby.

Air Cleanup Subsystem

The air cleanup subsystem is a redundant, shared airflow network having the capability to perform two functions for the affected reactor secondary containment during a LOCA. One of these is to keep the secondary containment annulus air volume below atmospheric pressure. The second function is to remove airborne particulates and vapors that may contain radioactive nuclides from air drawn from the annulus. Each of these is accomplished by this subsystem without disturbing operation of the unaffected reactor unit.

Both of these functions are performed by processing and controlling a stream of air taken from the affected reactor unit secondary containment annulus. The air cleanup operation is conducted by drawing the air stream through a series of filters and adsorbers. Annulus air pressure control is accomplished by adjusting the fraction of the airstream that is returned to the annulus air space. During the interim period when Unit 2 is under construction, the EGTS ductwork which exhausts air from the Unit 2 annulus is isolated from the air cleanup units by means of locked-closed isolation valves, while the supply ductwork is isolated by blank-off plates.

The negative pressure control setpoint chosen for post-accident operation is low enough that leakage across the boundary is into the annulus from both the primary containment and areas adjacent to the Shield Building. The minimum negative pressure in the annulus meets the requirements of NUREG-0800. The pressure differentials produced by wind effects are also overcome by appropriate selection of the annulus negative pressure level.

The rated capacity of each redundant air cleanup unit in the subsystem is 4000 cfm. This subsystem of the EGTS is classified as an engineered safety feature.

The air flow network for the air cleanup subsystem was designed to provide the redundant services needed for either reactor secondary containment annulus. The intakes and ducting in this network used to bring annulus air to the EGTS room on elevation 757' in the Auxiliary Building are those also used by the annulus vacuum control subsystem. The intake is centrally located within each Shield Building above the steel containment dome. Within the EGTS room the network branches out in a manner to supply two air cleanup unit installations that can be aligned with flow control dampers to serve either annulus air volume. After the air is processed, the air cleanup subsystem air flow network directs the air to redundant damper controlled flow dividers in each reactor unit annulus. At these points, the flow network contains two air flow paths leading to the reactor unit vent and two air flow paths to a manifold that distributes and releases the air uniformly around the bottom of the annulus. The vertical separation between the intake above the dome and the exhaust ports in the manifold is 168 feet. Butterfly valves, rather than dampers, are installed in the ducts just above the flow distribution manifold to minimize the outside air inleakage from the reactor unit vents into the annulus.

Another feature incorporated into the air cleanup subsystem air flow network is the capability to cool the filters and adsorbers in an inactive air cleanup unit that is loaded with radioactive material. This is accomplished with two cross-over flow ducts that can draw air at 200 cfm from the active air cleanup unit through the inactive air cleanup unit. (Such an air flow is sufficient to keep the temperature rise through a fully loaded inactive air cleanup unit to less than 75°F.) Two butterfly valves in series are installed in each cross-over air flow path to assure sufficient isolation to perform accurate removal efficiency tests on the HEPA filter and carbon absorber banks. After a Phase A containment isolation signal has initiated EGTS operation, the control room operator will shut one of the two EGTS trains down and align the appropriate butterfly valves for automatic operation. In addition, the associated suction valve is remotely opened from the main control room to establish a flow path from the affected annulus through the air cleanup unit.

This feature is provided in the event excessive absorber bed temperature occurs following the failure of an operating EGTS train. Absorber bed temperature is recorded in the main control room and status indication of each EGTS train is also provided. Upon failure of an operating EGTS train, absorber bed temperature is monitored to detect subsequent temperature rise. The two air cleanup units in the air cleanup subsystem are stainless steel housings containing air treatment equipment, samples, heaters, drains, test fittings, and access facilities for maintenance. See Section 6.5.1.2.1 for a description of the air cleanup units and information related to their design.

Two centrifugal fans are provided outside the air cleanup unit housings. Each of these is associated with a specific air cleanup unit. These fans were designed to function in process air flow streams at temperatures up to 200°F. See Table 6.2.3-1 for additional information on these fans.

Two air flow control modules are also included in the air cleanup subsystem. Each consists of a differential pressure sensor and transmitter, control circuitry, a damper actuator, and two modulating dampers. The single damper actuator adjusts the dampers simultaneously in opposite directions, i.e., one is closed as the other is opened.

A pressure controller, located in the main control room, modulates pressure control dampers in the annulus to maintain the differential pressure setpoint. Two sets of independent pressure control dampers installed in the secondary containment annulus provide the capability to adjust the amount of air recirculated to the reactor unit annulus or discharged to the shield building exhaust vent. Annulus pressures that are more positive than the pressure controller setpoint produce a signal causing the damper actuator to begin closing the damper controlling the air flow to the annulus and to start opening the damper controlling the air flow to the Shield Building exhaust vent. Annulus pressures that are more negative than the pressure controller setpoint initiate the opposite kind of damper motions.

Four isolation valves installed in the secondary containment annulus provide isolation of the pressure control dampers. Two handswitches in the control room are positioned

so that one set of isolation valves is in auto and the other is in standby. A containment isolation Phase A signal causes the valves in the auto position to open and the standby valves to remain closed. The open isolation valves provide a flow path for one set of pressure control dampers which modulate to control annulus pressure. When abnormal annulus pressure is detected, an "open" signal is sent to the standby isolation valves and a "close" signal is sent to the valves in the auto position. This transfers annulus pressure control to the other set of pressure control dampers. For further details, see Figures 6.2.3-14 and 6.2.3-15.

Operation of the air cleanup subsystem during accidents is initiated by the Phase A containment isolation signal. Both the A and the B trains will be started by this signal coming from either reactor unit. A capability is also provided to start both trains with a hand switch in the main control room. Damper alignment is also initiated by the same signal; however, just those associated with the affected reactor unit will be activated. Another adjustment of a hand switch in the main control room will change the operating mode to the single train operation with the redundant train in a standby status. Employment of this operating mode is expected after the first 30 minutes of operation. The control room operator can select either train to remain in operation.

6.2.3.2.3 Auxiliary Building Gas Treatment System (ABGTS)

The ABGTS is a fully redundant air cleanup network provided to reduce radioactive nuclide releases from the secondary containment enclosure during accidents. It does this by drawing air from the fuel handling and waste packaging areas through ducting normally used for ventilation purposes to air cleanup equipment, and then directing this air to the reactor unit vent. In doing so, this system draws air from all parts of the Auxiliary Building and the CDWE Building to establish a negative pressure region in which virtually no unprocessed air passes from this secondary containment enclosure to the atmosphere. During the construction phase of Unit 2 and during certain shutdown or refueling conditions, the primary containment and annulus of the affected unit(s) may be open to the Auxiliary Building. The ABGTS has been designed to establish a negative pressure in these additional areas for these configurations. Since the purge ventilation fans and instrument room fans, in addition to the normal ventilation system, may be operating during these conditions, an ABI signal shuts down these ventilation systems and closes associated isolation dampers/valves and starts the ABGTS.

All portions of the ABGTS that are required to ensure that the system functions properly are classified Seismic Category I. Certain portions of the system are not required for post-accident operation of the ABGTS. Those portions are seismically qualified to the extent that system operation is not adversely affected should they fail due to the seismic event (i.e., they are classified according to Seismic Category I(L)).

The rated capacity of each redundant air cleanup unit in this gas treatment system is 9000 cfm. These were designed in accordance with engineered safety feature standards.

The unique portions of the ABGTS are shown schematically in Figures 6.2.3-16 and 9.4-8. Logic and control diagrams for the ABGTS are shown in Figures 9.4-10 and

9.4-17. The airflow network for this system consists of two parallel duct installations originating from exhaust ducting that normally serves the fuel handling and waste packaging areas in the building. Each of these ducts lead directly to an air cleanup unit, to the fan associated with the air cleanup unit, and then directly to the reactor unit vent.

The air flow network that is not unique to this system consists of most of the normal ventilation ducting installed in the ABSCE. When the ABSCE is isolated, this duct network provides a flow path for reducing the air pressure level in all parts of this enclosure. In some instances, air is drawn in the opposite direction to the normal air flow pattern during operation of the ABGTS. Two air cleanup units are utilized in the ABGTS. Each unit includes air treatment components instrumentation, test fittings, and other equipment required for proper operations and testing of the system. Refer to Section 6.5.1.2.2 for a description of the ABGTS air cleanup units and information related to their design.

Air is drawn through each of these air cleanup units by a belt driven centrifugal fan. The drive for the fan is an electric motor. Additional information on these fans is given in Table 6.2.3-1.

The air flow control modules utilized in the ABGTS contain a differential pressure sensor and transmitter, control circuitry, and a modulating damper. These air flow control modules provide the capability for keeping the pressure within the ABSCE at a minimum of 1/4 inch water gauge below atmospheric. The modules do this by varying the amount of air drawn from this enclosed volume in a manner to keep the pressure at this desired negative value. This is done with a modulating damper that is controlled by the differential pressure transmitter and differential pressure controller circuit to adjust the amount of outside air introduced into the duct network just upstream of the constant capacity fan described above. Such action brings in sufficient outside air to keep the fan flow rate at its rated flow at all times. It also draws enough air from the ABSCE to establish and keep the desired negative pressure level.

The negative pressure level chosen for post-accident operation is sufficiently low to ensure that airborne contamination present in the Auxiliary Building is not released to the environs without being processed by an air cleanup assembly. External pressure gradients produced by wind loadings on the building do not adversely affect the ability of the ABGTS to maintain the negative pressure in the ABSCE.

The controls for the ABGTS are designed to provide two basic control modes. One control mode has either one of the air cleanup units in operation and the other in a state in which the redundant unit can automatically come into operation in the event the operating unit fails. Less than adequate pressure in the ABSCE is utilized in this control mode to make this failure determination. This operational redundancy is achieved with spatially separated power and control circuitry having different independent power sources to prevent a loss of function from any single system component failure. The term "Train A" is used to identify one complete set of full capacity equipment and the term "Train B" is used to identify the other set of full

capacity equipment. Power for both equipment trains is supplied by the emergency power system.

Operation of the ABGTS begins automatically upon initiation of an auxiliary building isolation signal which is generated from any of the following signals:

(1) Phase A containment isolation signal from either reactor unit, or

(2) High radiation signal from the spent fuel pool accident radiation monitors, or

(3) High temperature signal from the Auxiliary Building air intakes.

Note: Unit 1 air intake only provides signal while Unit 2 is under construction)

A capability is also provided to start both trains with a hand switch in the main control room. Another adjustment capability provided in the hand switch in the main control room changes the operating mode to the single train operation with the redundant train in a standby status. Employment of this operating mode is expected after the first 30 minutes of operation. In this instance, the main control room operator has the capability to select either train to remain in operation. The standby unit selected automatically starts in the event the operating unit does not adequately maintain negative pressure in the ABSCE.

6.2.3.3 Design Evaluation

6.2.3.3.1 Secondary Containment Enclosures

The secondary containment enclosures are designed to provide a positive barrier to all potential primary containment leakage pathways during a LOCA and to radioactive contaminants released in accidental spills and fuel handling accidents that may occur in the Auxiliary Building. In a LOCA, the Shield Building containment enclosure provides the barrier to all airborne primary containment leakage, and the Auxiliary Building provides a barrier to through-the-line leakage which can potentially become airborne.

(1) Shield Building

Structure

The Shield Building provides the physical barrier for airborne primary containment leakage during a LOCA. Because the Shield Building completely encloses the free standing primary containment, all airborne leakage from primary containment passes into the annular region provided by this arrangement.

The building construction employs monolithic pours of concrete. This approach for structures of this type produces a very low leakage barrier. The low leakage characteristics of this barrier help to reduce the rate at which purified annulus air

must be released to maintain the enclosed volume at a negative pressure. This factor contributes significantly to keeping the site boundary and the low population zone (LPZ) dosage levels within 10 CFR 100 guidelines.

The size of the annular region between the primary containment and the shield building assures a residence time for all leakage into the annulus.

Penetrations

The shield building wall is provided with more than 200 penetrations to accommodate mechanical equipment piping, cable trays, and electrical conduit which leave and enter the Shield Building. Due to the low leakage characteristics of the building, leakage through the Shield Building wall is restricted almost entirely to openings in these penetrations. The design assures that penetration leakage does not exceed predetermined quantities. Such a capability ensures that the inleakage is sufficiently low to keep the dose contributions at the site boundary and to the LPZ within 10 CFR 100 guidelines.

Openings in mechanical piping penetrations are sealed principally as shown in Figure 6.2.3-1. The seals are a flexible membrane type of single gaskets which incorporate fire resistant materials and are designed to withstand the combinations of Shield Building and piping movements in the SSE and retain their functional integrity. In addition, seals at or below the probable maximum flood elevation are designed to be water tight for flood static head and surge forces. All seals, where possible, are installed outside the Shield Building such that whether during normal operation, accidents, or flood, the differential pressures will tend to enhance the tightness of the seal. The design integrated dose for the Shield Building penetration following a LOCA is 6.7×10^6 rads and the penetration seal materials have been selected accordingly.

Cables routed in cable trays pass through the Shield Building wall through rectangular cable slot penetrations as shown in Figure 6.2.3-3. The sealant material installed around cables over a portion of the length of the cable slot is silicone RTV (room temperature vulcanizing) foam and is RTV silicone rubber installed around cables within conduits. The seals are typically shown in Figure 6.2.3-3 and are designed to withstand the SSE and retain their integrity. Electrical penetration seals are allowed twice the leakage of mechanical seals to provide sufficient margin in meeting the total allowable Shield Building leakage requirements.

The personnel and equipment access doors to the Shield Building are designed with heat resistant, resilient seals which reduce their leakage to the allowable values as stated in Section 6.2.3.2. These doors are designed to retain their structural integrity and leak tightness during a SSE as described in Sections 3.8.1 and 3.8.2. To allow personnel access to the annulus during operation, the annulus personnel access doors form an airlock. The doors are electrically interlocked such that only one of the pair may be opened at a time, but an electric interlock defeat switch is provided inside the annulus to provide for emergency

egress from the annulus should the door on the Auxiliary Building side of the lock be blocked open during an accident. Therefore, a continuous secondary containment barrier is provided while allowing personnel movement. The interlock is equipped with a local alarm and a control room annunciation to indicate should both doors ever be opened simultaneously.

The fuel transfer tubes penetrate the primary and secondary containment on their way to the Auxiliary Building. Each transfer tube has a blind flange on the inboard side of primary containment, equipped with double O-rings and a pressure test connection between the O-rings. The valve in the Auxiliary Building end of the transfer tube serves as the secondary containment isolation valve. The inner space between the primary containment flange and the isolation valve is bled to the annulus so that any leakage into the tube from primary containment or the Auxiliary Building flows into the annulus. The bleed line is routed above the maximum refueling pool water level to preclude accidental spills of refueling water.

(2) Auxiliary Building

Structure

The entire Auxiliary Building including walls, roof, and interior partitions is constructed by consecutive monolithic pours of concrete. This method of assembly produces a structure with very low leakage characteristics. The portions of the building chosen to constitute the isolation barrier were selected such that all sources of potential contamination are completely enclosed. Therefore, the structure utilized to form the Auxiliary Building containment envelope functions effectively as a barrier to the environs. This same structure also helps to reduce inleakage into the Auxiliary Building containment envelope during accidents to levels easily accommodated by the ABGTS.

Penetrations

Seals for mechanical penetrations are a flexible membrane type or single gaskets. They are designed to withstand Auxiliary Building and piping movements in the SSE and retain their structural integrity. The materials chosen for the seals are fire resistant. All seals, where possible, are designed such that whether during normal operation or accidents, the differential pressures tend to enhance the tightness of the seal. Sealing methods for electrical penetrations are similar to those for the shield building electrical penetrations.

Each ventilation duct penetrating the auxiliary building secondary containment enclosure (ABSCE) is equipped with two isolation dampers in series. The dampers have resilient blade end and blade edge seals which are designed to retain their functional characteristics. The motor operators for these dampers have been sized to tightly close the damper blades against their resilient seals. The damper and motor operator assemblies are designed to operate during and after the SSE.

Piping penetrations are either analyzed to pressure boundary retention requirements, or the effects of their failure are demonstrated to not impair the ability of the ABGTS system to maintain the ABSCE under the required negative pressure of 0.25 inches w.g., or they are isolated by physical means (e.g., locked-closed valves, etc.

6.2.3.3.2 Emergency Gas Treatment System (EGTS)

The EGTS has the capabilities needed to preserve safety in accidents as severe as the design basis LOCA. To verify that the proper features are provided, functional analyses were conducted which consist of failure modes and effects analysis of the system, reviews of Regulatory Guide 1.52 sections to assure licensing requirement conformance, and performance analyses to verify that the system has the desired accident mitigation capabilities. A detailed failure modes and effects analysis is presented in Table 6.2.3-2. The system is shown schematically in Figure 6.2.3-11.

The functional analyses conducted on the EGTS have shown that:

(1) Adequate isolation of the annulus vacuum control subsystem during accidents is provided. The two low leakage valves in series upstream of the annulus vacuum control subsystem fans used to isolate the two subsystems--one operated by each subsystem train--give assurance that the annulus vacuum control subsystem will be isolated during accidents. These valves fail closed.

(2) The air flow control dampers in the air cleanup subsystem align to service the affected reactor units. The network was designed to have all of the air flow control dampers shown in Figures 6.2.3-18 and 6.2.3-19 needed to service a particular reactor unit responsive to only the containment isolation signal from that particular reactor unit.

(3) The system intake and recirculation air outlets, shown on Figures 6.2.3-18 and 6.2.3-19, within the Shield Building annulus are positioned to promote mixing and dilution of primary containment leakage. Positioning the recirculated air manifold and the air outlets almost completely around the base of the annulus below the level of the containment penetrations assures a clean air flow past most of the penetrations. This air, warmed by the relative humidity heater, flows upward past these likely sources of leakage. In doing so, the flow impediments (i.e., penetrations, and structures within the annulus) tend to redirect this air flow to induce mixing and dilution. Substantial amounts of mixing and dilution are likely in the vertical rise of over 168 feet to the system air intake above the steel containment dome.

(4) System startup reliability is very high. The practice of starting up both full capacity trains in the system simultaneously gives greater assurance that one train of equipment functions promptly upon receipt of an accident signal.

(5) The use of a single actuator in each equipment train to adjust dampers controlling the air flow recirculated and vented improves train reliability and minimizes the possibility of annulus pressure instability. Simultaneous adjustment that closes one damper and opens the other eliminates the hunting problems that could arise from nonsimultaneous operation of separately actuated dampers.

(6) The Train A and Train B air cleanup units are adequately protected from each other to eliminate the possibility of a single failure destroying the capability to process annulus air during emergencies. The 13.5 feet high and 27 inch thick concrete wall built between the two units protects each from missiles originating in the other unit.

The EGTS, designed prior to issuance of Regulatory Guide 1.52, is in general agreement with requirements in the guide. Details on this compliance with Regulatory Guide 1.52 are given in Table 6.5-1.

The performance analyses conducted to verify that the EGTS has the required accident mitigation capabilities were conducted in three basic parts. One of these was concerned with the capability for keeping the Shield Building annulus below atmospheric pressure at all times during a LOCA. The second part was an analysis of the cooling capabilities provided to keep temperatures within filters and adsorbers fully loaded with radioactive nuclides at safe levels. The third part was concerned with the site boundary and LPZ dosage contribution from radioactive nuclides present in annulus air releases during the design basis LOCA. These three analyses are discussed under the respective headings below.

Annulus Negative Pressure Control Capability

The capability of the EGTS to keep the Shield Building annulus below atmospheric pressure during a design basis LOCA was established with a time iteration analysis performed by a computer. Energy and mass balances were accomplished successively in accordance with mass and volume changes calculated to take place during each time increment. Such a methodology allowed sufficient freedom to account for:

(1) Steel containment vessel growth from internal pressure,

(2) Steel containment vessel growth from thermal expansion,

(3) Outside air inleakage into the Shield Building annulus, and

(4) Heat transfer from the steel containment structure to the annulus air mass.

To assure that this analysis was valid and conservative:

(1) Heat transfer from the primary containment atmosphere to the primary containment vessel was assumed to be convective. An air-steam mixture convective heat transfer coefficient was chosen to maximize heat transfer to

the secondary containment atmosphere. The constant value of 400 Btu/hr-ft^2-°F given in Table 6.2.3-1 compares conservatively to the integrated transient heat transfer coefficients recommended in Branch Technical Position CSB 6-1. Heat transfer from the primary containment vessel to the annulus atmosphere and from the atmosphere to the secondary containment wall was assumed to be convective. Heat transfer from the primary containment vessel to the secondary containment wall was assumed to be by radiation. Forms of the transient convective heat transfer coefficients and values for the constant radiative heat transfer coefficients are given in Table 6.2.3-1. Consideration was given to the heat capacity of both the primary and secondary containment structures. The thermal conductivity and capacitance for these walls, as given in Table 6.2.3-1, agree closely with those obtained from Branch Technical Position CSB 6-1.

(2) The thermal growth of the steel vessel was based on linear expansion which was applied to the transient containment vessel temperature increases above the initial steady-state values to obtain the transient radial expansion (see Table 6.2.3-1 for total containment expansion). Temperature gradients were calculated for three regions: upper compartment, ice condenser, and lower compartment. The radial expansions in each of these three regions were converted to volume changes which were summed to yield a total annulus volume change due to primary containment vessel thermal expansion.

(3) Table 6.2.3-1 presents the characteristics of the internal pressure effects on the containment vessel. This model uses linear elastic thin shell theory to determine the expansion. The cylindrical portion of the vessel is assumed to act as a cylindrical shell with capped ends. The hemispherical dome expands uniformly as a simple sphere and includes the axial expansion of the cylinder. External vertical and circumferential stiffeners are assumed not to be present so that conservative results are obtained. This pressure-induced growth was assumed to occur instantaneously at the start of the LOCA.

(4) Air leakage into the Shield Building annulus was assumed to be 250 cfm at the post accident annulus control setpoint.

(5) The air temperature in the annulus was assumed to be a thermally mixed average.

(6) Only one train of the EGTS was assumed to operate, allowing for a possible single failure in the other.

The initial steady state conditions used in this analysis were as follows (refer also to Table 6.2.3-1):

	Pressure	Temperature	Relative Humidity
Containment upper compartment	atm.	110°F	0%
Ice condenser compartment	atm.	15°F	0%
Containment lower compartment	atm.	120°F	0%
Shield Building annulus	-5 in. w.g.	50°F	0%
Outside	atm.	0°	0%

These initial values were chosen to maximize the secondary containment pressure after the LOCA. The initial pressure of minus 5.0 inches of water gauge with respect to the outside is the pressure maintained by the annulus vacuum control subsystem during normal operation. The initial temperature of 50°F is the estimated minimum temperature which was assumed for maximum annulus air density. Similarly, the initial relative humidity of 0% was assumed for maximum annulus air density.

The results obtained from this analysis are shown in Figure 6.2.3-17. This annulus pressure and EGTS exhaust rate vs. time curve indicates that, after the initial containment pressure induced step increase, the pressure rises to a peak value of approximately minus 0.67 inch of water in about 90 seconds after the LOCA begins. The annulus pressure is then restored and maintained at or below the EGTS setpoint value as shown in Figure 6.2.3-17.

The expansion of approximately 1,234 ft^3 due to internal temperature summed with the expansion of 766 ft^3 from internal pressure yields a total primary containment vessel expansion of approximately 2,000 ft^3. Such results indicate that:

(1) The negative pressure level of 5 inches of water below atmospheric in the Shield Building annulus maintained by the annulus vacuum control subsystem before an accident minimizes the amount of unfiltered radioactive nuclides potentially released to the environment before the air cleanup subsystem becomes operational.

(2) The rated flow rate of 4000 +10% cfm for each train of the air cleanup subsystem is adequate to keep the annulus pressure below the negative pressure setpoint throughout the remaining period of the LOCA.

Inactive Air Cleanup Unit Cooling Capabilities

The second performance analysis conducted to show that the EGTS can cope with circumstances that may occur in a LOCA was concerned with temperature control capabilities provided for air filters and adsorbers loaded with radioactive material. The analysis conducted assumed accident releases in accordance with Regulatory Guide 1.4 plus 1% solids, containment leakages of 0.25%/day for the first day and 0.125%/day from one to thirty days with all the activity being collected in a single air

cleanup unit. An additional assumption made was that all of the gamma and beta energy releases were transformed into heat within the filters and absorbers.

This occurs a few days after the LOCA takes place. The design objective is to assure that the air cleanup unit component temperatures do not exceed 200°F; it was found that a cooling air flow rate of 90 cfm is required. Such results indicate that the cooling air flow rate of 200 cfm provided for this purpose should keep the temperature within the carbon absorber bank well below the 620°F carbon ignition temperature.

Site Boundary and LPZ Dosage Contributions

The last performance analysis conducted to show that the EGTS has the capability to perform in the required manner to preserve safety during a LOCA was concerned with the site boundary and LPZ dosage contributions arising from annulus air releases to the environs. This analysis is described and evaluated in Chapter 15.

6.2.3.3.3 Auxiliary Building Gas Treatment System (ABGTS)

The ABGTS has the capabilities needed to preserve safety in accidents as severe as a LOCA. This was determined by conducting functional analyses of the system to verify that the system has the proper features for accident mitigation which consist of a failure modes and effects analysis, a review of Regulatory Guide 1.52 sections to assure licensing requirement conformance, and a performance analysis to verify that the system has the desired accident mitigation capabilities. A detailed failure modes and effects analysis is presented in Table 6.2.3-3.

The functional analyses conducted on the ABGTS have shown that:

(1) The air intakes for the system are properly located to minimize accident effects. The use of the air intakes provided in the fuel handling and waste disposal areas minimizes the spread of airborne contamination that may be accidentally released at these positions in which the probability of an accidental release, e.g., a fuel handling accident, is more likely. This localization effect is provided without reducing the effectiveness of the system to cope with multiple activity released throughout the ABSCE that may occur during a LOCA. Such coverage is accomplished by utilizing the normal ventilation ducting to draw outside air inleakage from any point along the secondary containment enclosure to the fuel handling and waste disposal areas.

(2) Accident indication signals are utilized to bring the ABGTS into operation to assure that the system functions when needed to mitigate accident effects. Accidents in which this system is needed to preserve safety are automatically detected by at least one of the three instrumentation sets used to generate accident signals that result in system startup.

(3) System startup reliability is very high. The practice of allowing the automatic startup of either, or both, full capacity trains in the system gives greater assurance that one train of equipment functions upon receipt of an accident signal.

(4) The method adopted to establish and keep the negative pressure level within this secondary containment enclosure minimizes the time needed to reach the desired pressure level. Initially, the full capacity of the ABGTS fans is utilized for this purpose. After reaching the desired operating level, the system control module allows outside air to enter the air flow network just upstream of the fan at a rate to keep the fans operating at full capacity with the enclosed volume at the desired negative pressure level. In this situation, the amount of air withdrawn from the enclosed volume is equal to the amount of outside air inleakage through the ABSCE. In addition, two vacuum breaker dampers in series are provided to admit outside air in case the modulating dampers fail.

(5) The ABSCE is maintained at a slightly negative pressure to reduce the amount of unprocessed air escaping from this secondary containment enclosure to the atmosphere to insignificant quantities. In addition, this negative pressure level is less than that which is maintained within the annulus; such that, any air leakage between the Auxiliary Building and the Shield Building is from the Auxiliary Building into the Shield Building.

(6) The Train A and Train B air cleanup units are sufficiently separated from each other to eliminate the possibility of a single failure destroying the capability to process Auxiliary Building air prior to its release to the atmosphere. Two concrete walls and a distance of more than 80 feet separate the two trains. The use of separate trains of the emergency power system to drive the air cleanup trains gives further assurance of proper equipment separation.

During periods when the primary containment and annulus of a unit are open to the Auxiliary Building, the ABSCE also includes the primary containment and the annulus of that unit. During this condition, which exists during the construction phase of Unit 2 and certain shutdown and refueling operations, operator action is taken to ensure that the purge air ventilation system is shutdown.

The review of the ABGTS conducted to determine its conformance with Regulatory Guide 1.52 has shown that this system, designed prior to issuance of the guide, is in general agreement with its requirements. Details on compliance with Regulatory Guide 1.52 are given in Table 6.5-2.

The performance analysis conducted to verify that the ABGTS has the required accident mitigation capabilities has shown that the system flow rate is sized properly to handle all expected outside air inleakage at a 1/4 inch water gauge negative pressure differential. This indicates that the nominal flow rate of 9000 cfm is sufficient to assure an adequate margin above the expected ABSCE inleakage (ACU filters are replaced as needed to maintain a minimum flow capability of 9300 cfm under surveillance instructions).

The performance analysis evaluated the capability of the ABGTS to reach and maintain a negative pressure of 1/4 inch water gauge with respect to the outside within the boundaries of the ABSCE. The following was utilized in the analysis:

(1) Leakage into the ABSCE is proportional to the square root of the pressure differential, and is 7930 cfm maximum at a negative differential pressure of 1/4 inch water gauge.

(2) Only one air cleanup unit in the ABGTS operates at the rated capacity.

(3) The air cleanup unit fan begins to operate 30 seconds after initiation of the postulated LOCA.

(4) The initial static pressure inside the ABSCE is conservatively considered to be atmospheric pressure, although the ABSCE is under a negative pressure during normal operation.

(5) The effective pressure head due to wind equals 1/8 inch water gauge.

(6) Initial average air temperature inside the ABSCE equals 104°F.

(7) Atmospheric temperature and pressure are 95°F and 14.4 psia, respectively.

(8) ABSCE isolation dampers/valves close within 30 seconds after receiving an ABI or a high radiation signal, except for the fuel handling area exhaust dampers which must close within 11.7 seconds. The non-safety-related general ventilation and fuel handling area exhaust fans are designed to shut down automatically following a LOCA. Each fan is provided with a safety related Class 1E primary circuit breaker and a safety related Class 1E shunt trip isolation switch which is tripped by a signal of the opposite train from that for the primary circuit breaker to ensure that power is isolated from the fan.

The analysis utilizes the first law of thermodynamics and perfect gas relations in an iterative approach to determine temperature and pressure changes in the ABSCE. Heat sources and sinks (ESF equipment room coolers) are considered.

The results obtained indicate that the ABGTS has the capability to reach and maintain a negative pressure differential of 3 inch water gauge within four minutes of the receipt of an Auxiliary Building isolation signal.

The system contains sufficient air cleanup facilities to keep the contributions to the site boundary and LPZ dosage arising from Auxiliary Building air releases to small fractions of the 10 CFR 100 guideline values. This part of the analysis is presented and evaluated in Chapter 15.

6.2.3.4 Test and Inspections

6.2.3.4.1 Emergency Gas Treatment System (EGTS)

Preoperational testing of the EGTS is conducted to verify that the Shield Building and the EGTS have the capabilities needed to keep LOCA generated activity releases from the affected reactor unit at or below limits specified in 10 CFR 100. Included in the scope of testing are functional tests on all system instrumentation, controls, and alarms. The tests are structured to accomplish the following:

(1) Verification that Shield Building infiltration is less than or equal to the design value at the design negative pressure level for post-accident conditions.

(2) Verification of the system capability to establish and maintain the proper negative pressure level in the annulus.

(3) Verification that the air cleanup units meet requirements specified in Regulatory Guide 1.52. Refer to Section 6.5.1.4.1 for further information related to tests applicable to the air cleanup units.

(4) Verification of proper operation of all system components, instrumentation, alarms, and data displays.

The periodic test program for the EGTS fans and air cleanup units is described in the Technical Specifications. A periodic test is performed once every 18 months to verify that the EGTS can maintain the annulus at a negative pressure within the instrument deadband immediately above and below the nominal design value. This test also verifies that the Shield Building inleakage rate to the annulus is less than or equal to 250 cfm at the nominal design value. A verification of system flow capacity and Shield Building inleakage rates at the specified negative pressure is adequate to confirm that the calculated depressurization time is conservative. The EGTS fans start within 30 seconds following the initiation of a containment isolation phase A signal.

6.2.3.4.2 Auxiliary Building Gas Treatment System (ABGTS)

Preoperational testing of the ABGTS is conducted to verify that the ABGTS has the capabilities needed to reduce radioactive releases from the ABSCE to the environment during an accident to levels sufficiently low to keep the site boundary dose rates below the requirements of 10 CFR 100. Included in the test scope are functional tests on all system instrumentation, controls, and alarms. The tests are structured to accomplish the following:

(1) Verify the startup and control capabilities of the system, considering a single operating component failure.

(2) Verify the capability of the air flow control modules to create and maintain a negative pressure within the ABSCE.

(3) Verify that ABSCE infiltration is less than or equal to the design value at the design negative pressure level considering a postulated failure of a non-safety related component.

(4) Verify that the air cleanup units meet requirements specified in Regulatory Guide 1.52. Refer to Section 6.5.1.4.2 for further information related to tests applicable to the air cleanup units.

The periodic test program for the ABGTS fans and air cleanup units is described in the Technical Specifications. A periodic test is performed to verify that the ABGTS can maintain the ABSCE at a negative pressure between -0.25 and -0.5 inches of water with respect to atmospheric pressure. This test also verifies that the ABSCE inleakage

rate is less than or equal to 7930 cfm while the ABSCE is being maintained at the negative pressure described above. A verification of system flow capacity and ABSCE inleakage rate at the specified negative pressure is adequate to confirm that the calculated depressurization time is conservative.

6.2.3.5 Instrumentation Requirements

6.2.3.5.1 Emergency Gas Treatment System (EGTS)

The air flow control instrumentation requirements for the EGTS are described in Section 6.2.3.2.2. Instrumentation associated with the air cleanup units is discussed in Section 6.5.1.5.1. The logic, controls, and instrumentation of this engineered safety feature system are such that a single failure of any component does not result in the loss of functional capability for the system.

6.2.3.5.2 Auxiliary Building Gas Treatment System (ABGTS)

Instrumentation required for the air flow control modules and air cleanup units are discussed in Section 6.2.3.2.3. Instrumentation associated with the air cleanup units is discussed in Section 6.5.1.5.2. The logic, controls, and instrumentation of this engineered safety feature system are such that a single failure of any component does not result in the loss of functional capability for the system.

Table 6.2.3-1 Dual Containment Characteristics (Page 1 of 2)

I. Secondary Containment Design Information

	Shield Bldg.	ABSCE
A. Free Volume (ft^3)	3.96×10^5	6.9×10^6
B. Pressure (in. wg)#		
Normal Operation	-5.0	-0.25
Post-Accident	-0.5	-0.25
C. Leak Rate at Post-Accident Pressure (%/day)	91	165.5
D. Exhaust Fans		
Normal Operation		
Number	4 (2/reactor unit)*	6**
Type	centrifugal	centrifugal
Post-Accident Operation		
Number		
Type	2***	2****
	centrifugal	centrifugal

E. Filters: Refer to Table 6.5-5

II. Transient Analysis

A. Initial Conditions

1. Pressure = 14.4 psig
2. Annulus temperature = 50°F
3. Outside air temperature = 0°F
4. Thickness of secondary containment wall = 36 in.
5. Thickness of steel containment vessel = ranging from 0.8125 to 1.50 inches

*Annulus vacuum control subsystem
**Auxiliary Building general exhaust (2/unit) and fuel handling area exhaust (2)
***EGTS
****ABGTS
#Due to instrument locations and inaccuracies, the actual setpoints are more negative than the required values shown.

Table 6.2.3-1 Dual Containment Characteristics (Page 2 of 2)

II. Transient Analysis (continued)

B. Thermal Characteristics

1. Primary containment wall

a. Total expansion = 2000 ft^3
Pressure expansion = 766 ft^3
Temperature expansion = 1234 ft^3

b. Thermal conductivity = 31 Btu/hr-ft-°F

c. Heat capacity = 0.111 Btu/lb-°F

2. Secondary containment wall

a. Thermal conductivity = 1.6 Btu/hr-ft-°F

b. Heat capacity = 0.22 Btu/lb-°F

3. Heat transfer coefficients

a. Primary containment atmosphere to primary containment wall = 400 Btu/hr-ft^2-°F

b. Primary containment wall to secondary containment atmosphere = 0.19 $(\Delta T)^{1/3}$ Btu/hr-ft^2-°F

c. Secondary containment wall to secondary containment atmosphere = 0.19 $(\Delta T)^{1/3}$ Btu/hr-ft^2-°F

d. Primary containment emissivity = 0.90

e. Secondary containment emissivity = 0.90

Table 6.2.3-2 Failure Modes and Effects Analysis Emergency Gas Treatment System (Page 1 of 8)

	COMPONENT IDENTIFICATION	FUNCTION	FAILURE MODE	POTENTIAL CAUSE	METHOD OF FAILURE DETECTION	EFFECT ON SYSTEM	EFFECT ON PLANT	REMARKS
1.	EGTS ACU Fans (2) A-A & B-B	Draws air from annulus to maintain negative pressure in the annulus during design basis events	No flow or low flow on one fan	Fan failure and/or dirty filters	Low flow alarm in the MCR	Loss of flow through the affected EGTS train	Momentary reduction in exhaust from the annulus	Redundant fan starts on low flow signal from failed fan and train.
2.	EGTS ACU (2) A-A & B-B	Filter air to remove airborne particulates and vapors from the annulus of the affected reactor during design basis events	Filters leak	Defective filters	High radiation levels indicated in the MCR from shield building exhaust vent	None	None	High radiation levels are indicated in the MCR and the operator should start the redundant ACU. In addition, periodic testing of EGTS ACUs is conducted in accordance with R.G. 1.52 to verify leak tightness of HEPA and charcoal bank efficiencies.
3.	Containment annulus vacuum fan isolation valves (4) 1-FCV-65-52 1-FCV-65-53 2-FCV-65-4 2-FCV-65-5	Isolate annulus vacuum control fans from EGTS during ACU operation	Open	Valve failure	Valve position indicating light in the MCR	Lose one of two redundant valves in series	None	Redundant valve in series with failed valve provides isolation function.
4.	B train isolation valves (2) at EGTS Train A suction 1-FCV-65-8 (for Unit 1)	Provide decay heat removal cooling flow path for A-A ACU when B-B ACU is operating for Unit 1 (valve open by operator action)	Open when ACU A-A is in operation	Valve failure	Valve position indicating light in the MCR	Parallel flow path to ACU A-A is open	None	Additional flow path is available which causes no adverse effect.
			Open when ACU A-A is in stand-by	Valve failure	Valve position indicating light in the MCR	Negative pressure on ACU A-A by suction of ACU Fan B-B	None	Valve on Fan A-A discharge side (0-FCV-65-24) closes when ACU A-A is in standby and will prevent backflow.

Table 6.2.3-2 Failure Modes and Effects Analysis Emergency Gas Treatment System (Continued) (Page 2 of 8)

	COMPONENT IDENTIFICATION	FUNCTION	FAILURE MODE	POTENTIAL CAUSE	METHOD OF FAILURE DETECTION	EFFECT ON SYSTEM	EFFECT ON PLANT	REMARKS
4.	(Cont'd)		Closed when by-pass cooling is required	Valve failure	Valve position indicating light in the MCR	See remark	None	Bypass cooling provision will not be used unless ACU fails and enough heat is generated by radioactivity which is collected on HEPA and charcoal adsorber to raise the charcoal bed temperature significantly. Therefore, a second failed closed isolation valve need not be postulated.
4a.	2-FCV-65-7 (for Unit 2)	Same as Item 4 except flow path is from Unit 2	Same as Item 4	Same as Item 4	Same as Item 4	Same as Item 4 except ACU A-A becomes ACU B-B and ACU B-B becomes ACU A-A	Same as Item 4	Same as Item 4 except A-A becomes B-B and valve on Fan B-B (0-FV-65-43) is closed.
5.	A train isolation valves (2) at EGTS Train B suction 1-FCV-65-51 (for Unit 1)	Provide decay heat cooling path for B-B ACU when A-A ACU is operating for Unit 1 (valve open by operator action)	Open when ACU B-B is in operation	Valve failure	Valve position indicating light in the MCR	Parallel flow path to ACU B-B is open	None	Additional flow path is available which causes no adverse effect.
			Open when ACU B-B is in standby	Valve failure	Valve position indicating light in the MCR	Negative pressure on ACU B-B by suction of ACU Fan A-A	None	Valve on Fan B-B discharge side (0-FCV-65-43) closes when ACU B-B is in standby and will prevent backflow.
			Closed when bypass cooling is required	Valve failure	Valve position indicating light in the MCR	See remark on Item 4	None	Same as Item 4.
5a.	2-FCV-65-50 * (for Unit 2)	Same as Item 5 except flow path is from Unit 2	Same as Item 5	Same as Item 5	Same as Item 5	Same as Item 5 except ACU B-B becomes ACU A-A and ACU A-A becomes ACU B-B	Same as Item 5	Same as Item 5 except B-B becomes A-A and Valve 0-FCV-65-24 closes.

* Valve 2-FCV-65-50 has been replaced with a steel plate to isolate Unit 1 operational boundary.

Table 6.2.3-2 Failure Modes and Effects Analysis Emergency Gas Treatment System (Continued) (Page 3 of 8)

	COMPONENT IDENTIFICATION	FUNCTION	FAILURE MODE	POTENTIAL CAUSE	METHOD OF FAILURE DETECTION	EFFECT ON SYSTEM	EFFECT ON PLANT	REMARKS
6.	Isolation valves (2) at EGTS Train A suction 1-FCV-65-10 (for Unit 1)	Isolation control valve. It opens on a containment isolation signal so that EGTS can exhaust air from the annulus of the affected unit. It also isolates Train A ACU during normal plant operation.	Closed when ACU A-A is in operation	Valve failure	Low flow alarm and valve position indicating light in MCR	Momentary decrease in flow	None	Redundant ACU Fan B-B starts on low flow signal from Fan A-A and Valve 1-FCV-65-30 or 2-FCV-65-29 opens. Fan starting signal is independent of valve failure.
			Closed when both Trains A & B ACUs are in operation	Valve failure	Low flow alarm and valve indicating light in MCR	Momentary decrease in flow	None	Train B ACU continues to operate with either Valve 1-FCV-65-30 or 2-FCV-65-29 open.
			Open when Train A ACU is in standby	Valve failure	Valve position indicating light in the MCR	Open back flow path to ACU A-A	None	Flow Control Valve 0-FCV-65-24 and Backdraft Damper 0-65-524 close when ACU A-A is in standby and will prevent back flow.
6a.	2-FCV-65-9 (for Unit 2)	Same as Item 6 except flow path is from Unit 2	Same as Item 6 except A-A becomes B-B	Same as Item 6	Same as Item 6	Same as Item 6	None	Same as Item 6 except A-A becomes B-B and Valve 0-FCV-65-43 and backdraft damper 0-65-523 close.

Table 6.2.3-2 Failure Modes and Effects Analysis Emergency Gas Treatment System (Continued) (Page 4 of 8)

	COMPONENT IDENTIFICATION	FUNCTION	FAILURE MODE	POTENTIAL CAUSE	METHOD OF FAILURE DETECTION	EFFECT ON SYSTEM	EFFECT ON PLANT	REMARKS
7.	Isolation valves (2) at EGTS Train A suction 1-FCV-65-30 (for Unit 1)	Isolation control valve. It opens on a containment isolation signal so that EGTS can exhaust air from the annulus of the affected unit. It also isolates ACUs during normal plant operation.	Closed when ACU B-B is in operation	Valve failure	Low flow alarm and valve position indicating in the MCR	Momentary decrease in flow	None	Redundant ACU Fan A-A starts on low flow signal from Fan B-B and Valve 1-FCV-65-10 or 2-FCV-65-9 opens. Fan starting signal is independent of valve failure.
			Closed when both Trains A & B ACUs are in operation.	Valve failure	Low flow alarm and valve position indicating light in the MCR	Momentary decrease in flow	None	Train A ACU continues to operate with Valve 1-FCV-65-10 or 2-FCV-65-9 open.
			Open when Train B ACU is in standby.	Valve failure	Valve position indicating light in the MCR	Open back flow path to ACU B-B	None	Flow Control Valve 0-FCV-65-43 closes when ACU B-B is in standby and will prevent backflow.
7a.	2-FCV-65-29 (For Unit 2)	Same as Item 7 except flow path is from Unit 2	Same as Item 7 except B-B becomes A-A	Same as Item 7	Same as Item 7	Same as Item 7	None	Same as Item 7 except B-B becomes A-A and Valve 0-FCV-65-24 closes.
8.	EGTS fan isolation valves 0-FCV-65-24 0-FCV-65-43	Isolates EGTS fan from duct distribution system when EGTS fan is on standby	Closed when EGTS fan is operating	Valve failure	Low flow alarm and valve position indicating light in the MCR	Loss of flow through the affected EGTS train	None	Redundant fan starts on low flow signal from the affected train. Fan starting signal is independent of valve failure.

Table 6.2.3-2 Failure Modes and Effects Analysis Emergency Gas Treatment System (Continued) (Page 5 of 8)

	COMPONENT IDENTIFICATION	FUNCTION	FAILURE MODE	POTENTIAL CAUSE	METHOD OF FAILURE DETECTION	EFFECT ON SYSTEM	EFFECT ON PLANT	REMARKS
9.	Shield building exhaust isolation dampers 1-FCO-65-26 1-FCO-65-27 (2-FCO-65-45) (2-FCO-65-46)	Open air path for EGTS exhaust to be discharged to either shield building vent and recirculated air flow to either annulus	One damper is closed when EGTS fan is operating	Damper failure	Damper position indicating light in the MCR	None	None	Damper in parallel flow path is open.
10.	EGTS inlet flow elements (2) 1-FE-65-54 * (2-FE-65-3)	Senses flow to EGTS and records flow in MCR	No signal	Flow element failure	Low flow is recorded in MCR	None (see remark)	None	These components are not required for accident mitigation. They are located in the system flow path to provide additional flow information to the operator. No control function.
11.	Annulus Recirc. & Shield building exhaust flow elements * 1-FE-65-84 & 85 1-FE-65-78 & 79 (2-FE-65-84 & 85) (2-FE-65-78 & 79)	Indicates air flow to outside or to the annulus ring header	False signal	Flow element failure	Flow indication in the MCR	None (see remark)	None	These components are not required for accident mitigation. They are located in the system flow path to provide additional flow information to the operator. No control function.

* Flow elements 1-FE-65-54, -78, -84, and -85 have been abandoned in place; flow elements 1 & 2-FE-65-79 have been deleted; flow indicators 2-FI-65-78, -84, and -85 have been deleted, hence making their associated FEs non-functional.

Table 6.2.3-2 Failure Modes and Effects Analysis Emergency Gas Treatment System (Continued) (Page 6 of 8)

	COMPONENT IDENTIFICATION	FUNCTION	FAILURE MODE	POTENTIAL CAUSE	METHOD OF FAILURE DETECTION	EFFECT ON SYSTEM	EFFECT ON PLANT	REMARKS
12.	Back draft dampers (2) 0-65-523 0-65-524	Prevent backflow through Train A ACU when Train B ACU is in operation	Stuck closed when Train A ACU is in operation and Train B ACU is in standby	Spring failure	Low flow alarm in MCR for Train A ACU	Momentary decrease in flow from annulus	None	Redundant ACU Fan B-B starts on low flow from Train A-A. Fan starting signal is independent of damper failure.
			Stuck closed when both Train A & Train B ACUs are in operation	Spring failure	Low flow alarm in MCR for Train A ACU	None	None	Train B ACU continues to operate and Train A will be turned off by operator.
13.	Back draft dampers (2) 0-65-525 0-65-526	Prevent backflow through Train B ACU when Train A ACU is in operation	Stuck closed when Train B ACU is in operation and Train A ACU is in standby	Spring failure	Low flow alarm in MCR for Train B	Momentary decrease in flow from annulus	None	Redundant ACU Fan A-A starts on low flow from Train B-B. Fan starting signal is independent of damper failure.
			Stuck closed when both Train A & Train B ACUs are in operation	Spring failure	Low flow alarm in MCR for Train B	None	None	Train A ACU continues to operate and Train B will be turned off by operator.
14.	Modulating dampers (8) 1-PCO-65-80 1-PCO-65-82 1-PCO-65-88 1-PCO-65-89 (2-PCO-65-80) (2-PCO-65-82) (2-PCO-65-88) (2-PCO-65-89)	Modulates EGTS flow released to outside atmosphere to control the annulus pressure	Closed, open or improper modulation	Damper failure	Dampers arming setpoint is not reached after 45.0 minutes from receipt of Phase A isolation signal Pressure differential is indicated in MCR	Loss of one of two redundant sets of dampers	None	Redundant set of modulating dampers in parallel flow path maintains the required negative pressure in the annulus.

Table 6.2.3-2 Failure Modes and Effects Analysis Emergency Gas Treatment System (Continued) (Page 7 of 8)

	COMPONENT IDENTIFICATION	FUNCTION	FAILURE MODE	POTENTIAL CAUSE	METHOD OF FAILURE DETECTION	EFFECT ON SYSTEM	EFFECT ON PLANT	REMARKS
15.	Isolation valves (8) 1-PCV-65-81 1-PCV-65-83 1-PCV-65-86 1-PCV-65-87 (2-PCV-65-81) (2-PCV-65-83) (2-PCV-65-86) (2-PCV-65-87)	Isolates EGTS ductwork from outside atmosphere and ring header during normal plant operation	One valve closed when EGTS is in operation	Valve failure	Valve position indicating light in the MCR	One of the two parallel flow paths is lost	None	Redundant flow path is available.
16.	Isolation valves (2) 0-FCV-65-28A 0-FCV-65-28B	Valves open to remove decay heat in the idle train ACU	One valve opens when bypass cooling is not in operation	Valve or instrument failure	Valve position indicating light in the MCR	None	None	Valve normally closed; fail-closed second valve in series maintains isolation.
			One valve closed when bypass cooling is in operation	Valve failure	Valve position indicating light in the MCR	See remark	None	Bypass cooling provision will not be used unless ACU fails and enough heat is generated by radioactivity collected on HEPA and charcoal adsorber to raise the charcoal bed temperature significantly. Therefore, a second failure (closed isolation valve) need not be considered.
17.	Isolation valves (2) 0-FCV-65-47A 0-FCV-65-47B	Same as Item 16	Same as Item 16	Same as Item 16	Same as Item 16	See remark on Item 16	None	Same as Item 16.
18.	Flow elements (2) 0-FS-65-31A/B 0-FS-65-55A/B	Opens decay heat removal isolation valves to the operating ACU when no flow is sensed at the idle ACU	No flow when decay heat removal cooling is required	Instrument failure	Valve position indicating light in the MCR	See remark on Item 16	None	Same as Item 16.

Table 6.2.3-2 Failure Modes and Effects Analysis Emergency Gas Treatment System (Continued) (Page 8 of 8)

	COMPONENT IDENTIFICATION	FUNCTION	FAILURE MODE	POTENTIAL CAUSE	METHOD OF FAILURE DETECTION	EFFECT ON SYSTEM	EFFECT ON PLANT	REMARKS
19.	Flow elements (2) 0-FS-65-31B/A 0-FS-65-55B/A	Starts EGTS standby ACU unit upon loss of flow in normally operating ACU unit	Loss of flow at the operating unit	Valve or instrument failure	Redundant ACU starts	Momentary decrease in flow from annulus	None	Redundant ACU starts on low flow at the operating unit.
20.	Flow elements (2) 0-FS-65-25A/B 0-FS-65-44A/B	Shuts off relative humidity heater on low air flow and alarm in MCR	Spurious signal	Flow element failure	Low flow and Hi-temperature alarms in the MCR	Humidity heater may stay on after EGTS fan stops	None	The EGTS fan can be stopped either by operator action or fan failure, which is a single failure. The other EGTS fan is available to function. The heater is controlled by temperature switches; therefore, the spurious signal of the flow element has no effect.
21.	Flow elements (2) 0-FS-65-25B/A 0-FS-65-44B/A	Opens decay heat removal isolation valves on idle ACU when high flow is sensed at the operating unit	No flow from decay heat removal cooling bypass	Valve or instrument failure	Valve position indicating light in the MCR	See remark on Item 16	None	See remark on Item 16, except second failure of valve or instrument need not be considered.

Table 6.2.3-3 Failure Modes and Effects Analysis for the ABGTS

ITEM NO.	COMPONENT	FUNCTION	FAILURE MODE	POTENTIAL CAUSE	METHOD OF DETECTION	EFFECT ON SYSTEM	EFFECT ON PLANT	REMARKS
1	Auxiliary Building Isolation (ABI) signal Train A	Deenergizes solenoid valves to close associated dampers and establish AB secondary containment enclosure; stops AB general ventilation fans; starts various ESF room coolers; starts ABGTS fans to maintain negative pressure in the ABSCE and remove contaminants from the ABSCE air prior to discharge to atmosphere.	Signal fails.	Train A vital ac bus failure; Relay VKA1 failure; Train A initiating signal (Phase A containment isolation, high rad in refueling area, high temp. in Aux. Building general supply duct) failure.	MCR indication of only one train ABGTS fan starting and one train of ABSCE dampers closing.	Loss of redundancy in ABSCE isolation and in ABGTS until operator starts Train A ABGTS manually from MCR, after ascertaining that Train B ABI signal is not spurious.	None.	Train A and Train B ABI initiating signals are derived from independent (train-separated) qualified devices.
			Spurious signal.	Operator error, spurious initiating signal (initiating signals listed above).		Unnecessary isolation of ABSCE and actuation of ABGTS.	None.	

Table 6.2.3-3 Failure Modes and Effects Analysis for the ABGTS (Continued)

ITEM NO.	COMPONENT	FUNCTION	FAILURE MODE	POTENTIAL CAUSE	METHOD OF DETECTION	EFFECT ON SYSTEM	EFFECT ON PLANT	REMARKS
2	Auxiliary Building Isolation (ABI) signal Train B	Deenergizes solenoid valves to close associated dampers and establish AB secondary containment enclosure; stops AB general ventilation fans; starts various ESF room coolers; starts ABGTS fans to maintain negative pressure in ABSCE and remove contaminants from the ABSCE air prior to discharge to atmosphere.	Signal fails.	Train B vital ac bus failure; Relay VKB1 failure; Train B initiating signal (Phase A containment isolation, high rad in refueling area, high temp. in Aux. Building general supply duct) failure.	MCR indication of only one train ABGTS fan starting and one train of ABSCE dampers closing.	Loss of redundancy in ABSCE isolation and in ABGTS until operator starts Train B ABGTS manually from MCR, after ascertaining that Train A ABI signal is not spurious.	None.	Train A and Train B ABI initiating signals are derived from independent (train-separated) qualified devices.
			Spurious signal.	Operator error, spurious initiating signal (initiating signals listed above).		Unnecessary isolation of ABSCE and actuation of ABGTS.	None.	

Table 6.2.3-3 Failure Modes and Effects Analysis for the ABGTS (Continued)

ITEM NO.	COMPONENT	FUNCTION	FAILURE MODE	POTENTIAL CAUSE	METHOD OF DETECTION	EFFECT ON SYSTEM	EFFECT ON PLANT	REMARKS
3	ABGTS Exhaust Fan A-A	Draws a portion of air in the ABSCE through an air cleanup unit (ACU) to remove radioactive contaminants and discharge into the shield building exhaust vent to maintain a negative pressure in the ABSCE relative to the outside.	Fails to start or fails to run.	Mechanical failure; Train A power failure; Train A ABI signal (HS in A-Auto).	Indicating light in MCR.	Loss of redundancy in ABGTS.	None. ABGTS Fan B-B can perform the functions of maintaining the ABSCE at a negative pressure and removing contaminants.	Handswitches for ABGTS Fans A-A and B-B in the MCR should normally be in the A-Auto position. On an ABI signal, both fans start and the operator may stop one fan and place its handswitch in the P-Auto (pull-out) position. This mode of operation is expected to occur after 30 minutes of two fan operation. During an ABI, the fan in the P-Auto mode will start automatically on insufficient negative pressure in the ABSCE relative to the outside. An alarm is provided for the condition when flow is inadequate 45 seconds after fan start.
			Starts spuriously.	Spurious Train A ABI signal (HS in A-Auto); spurious low flow signal from Fan B-B after valid ABI signal (HS in P-Auto).	See "Remarks" column.	Vacuum relief line dampers may open to prevent excessive negative pressure in ABSCE by admitting outside air.	None.	Status monitor light and ind. light in MCR provide indication to operator that fan is running. However, if only one ABGTS train starts when both fans are in A-Auto or if the fan in P-Auto starts, the operator cannot determine whether the signal is valid or spurious (no detection of spurious operation). This is acceptable since there is no impact on plant safety without a second failure (e.g., failure of a vacuum relief damper).

Table 6.2.3-3 Failure Modes and Effects Analysis for the ABGTS (Continued)

ITEM NO.	COMPONENT	FUNCTION	FAILURE MODE	POTENTIAL CAUSE	METHOD OF DETECTION	EFFECT ON SYSTEM	EFFECT ON PLANT	REMARKS
4	ABGTS Exhaust Fan B-B	Draws a portion of air in the ABSCE through an air cleanup unit (ACU) to remove radioactive contaminants and discharge into the shield building exhaust vent to maintain a negative pressure in the ABSCE relative to the outside.	Fails to start or fails to run.	Mechanical failure; Train B power failure; Train B ABI signal failure (HS in A-Auto).	Indicating light in MCR.	Loss of redundancy in ABGTS.	None. ABGTS Fan A-A can perform the functions of maintaining the ABSCE at a negative pressure and removing contaminants.	Handswitches for ABGTS Fans A-A and B-B, in the MCR should normally be in the A-Auto position. On an ABI signal, both fans start and the operator may stop one fan and place its handswitch in the P-Auto (pull-out) position. This mode of operation is expected to occur after 30 minutes of two fan operation. During an ABI, the fan in the P-Auto mode will start automatically on insufficient negative pressure in the ABSCE relative to the outside. An alarm is provided for the condition when flow is inadequate 45 seconds after fan start.
			Starts spuriously.	Spurious Train B ABI signal (HS in A-Auto); spurious low flow signal from Fan A-A after valid ABI signal (HS in P-Auto).	See "Remarks" column.	Vacuum relief line damper/s may open to prevent excessive negative pressure in ABSCE by admitting outside air.	None.	Status monitor light and ind. light in MCR provide indication to operator that fan is running. However, if only one ABGTS train starts when both fans are in A-Auto or if the fan in P-Auto starts, the operator cannot determine whether the signal is valid or spurious (no detection of spurious operation). This is acceptable since there is no impact on plant safety without a second failure (e.g., failure of a vacuum relief damper).

Table 6.2.3-3 Failure Modes and Effects Analysis for the ABGTS (Continued)

ITEM NO.	COMPONENT	FUNCTION	FAILURE MODE	POTENTIAL CAUSE	METHOD OF DETECTION	EFFECT ON SYSTEM	EFFECT ON PLANT	REMARKS
5	ABGTS Fan A-A Inlet Damper 1-FCO-30-146B	Provides flowpath for ABGTS Exhaust Fan A-A.	Fails to open or stuck closed.	Mechanical failure.		Loss of redundancy in ABGTS.	None. ABGTS Fan B-B can perform the functions of maintaining the ABSCE at a negative pressure and removing contaminants.	ABGTS Fan A-A Inlet and Outlet Dampers 1-FCO-30-146A and 1-FCO-30-146B open on starting of associated fan and close when the fan stops. Spurious opening of Dampers 1-FCO-30-146A and 1-FCO-30-146B when Fan A-A is not running is possible due to a short circuit in control wiring. However, it is not listed as a failure mode since the exhaust ducting of the two fans is not directly connected, making it very unlikely that a non-running fan would rotate in reverse due to spurious opening of its dampers.
6	ABGTS Fan A-A Outlet Damper 1-FCO-30-146A	Provides flowpath for ABGTS Exhaust Fan A-A.	Fails to open or stuck closed.	Mechanical failure.		Loss of redundancy in ABGTS.	None. ABGTS Fan B-B can perform the functions of maintaining the ABSCE at a negative pressure and removing contaminants.	ABGTS Fan A-A Inlet and Outlet Dampers 1-FCO-30-146A and 1-FCO-30-146B open on starting of associated fan and close when the fan stops.

Table 6.2.3-3 Failure Modes and Effects Analysis for the ABGTS (Continued)

ITEM NO.	COMPONENT	FUNCTION	FAILURE MODE	POTENTIAL CAUSE	METHOD OF DETECTION	EFFECT ON SYSTEM	EFFECT ON PLANT	REMARKS
7	ABGTS Fan B-B Inlet Damper 2-FCO-30-157B	Provides flowpath for ABGTS Exhaust Fan B-B.	Fails to open or stuck closed.	Mechanical failure.		Loss of redundancy in ABGTS.	None. ABGTS Fan A-A can perform the functions of maintaining the ABSCE at a negative pressure and removing contaminants.	ABGTS Fan B-B Inlet and Outlet Dampers 2-FCO-30-157A and 2-FCO-30-157B open on starting of associated fan and close when the fan stops. Spurious opening of Dampers 2-FCO-30-157A and 2-FCO-30-157B when Fan B-B is not running is possible due to a short circuit in control wiring. However, it is not listed as a failure mode since the exhaust ducting of the two fans is not directly connected, making it very unlikely that a non-running fan would rotate in reverse due to spurious opening of its dampers.
8	ABGTS Fan B-B Outlet Damper 2-FCO-30-157A	Provides flowpath for ABGTS Exhaust Fan B-B.	Fails to open or stuck closed.	Mechanical failure.		Loss of redundancy in ABGTS.	None. ABGTS Fan A-A can perform the functions of maintaining the ABSCE at a negative pressure and removing contaminants.	ABGTS Fan B-B Inlet and Outlet Dampers 2-FCO-30-157A and 2-FCO-30-157B open on starting of associated fan and close when the fan stops.

Table 6.2.3-3 Failure Modes and Effects Analysis for the ABGTS (Continued)

ITEM NO.	COMPONENT	FUNCTION	FAILURE MODE	POTENTIAL CAUSE	METHOD OF DETECTION	EFFECT ON SYSTEM	EFFECT ON PLANT	REMARKS
9	Isolation Damper 0-FCO-30-137 Train A	Closes on ABI or high rad in refueling area signal to isolate Fuel Handling Area Exhaust Fan A-A and to establish boundary for ABGTS.	Stuck open, fails to close, or spuriously opens.	Mechanical failure; hot short in control wiring; Train A ABI or high rad in refueling area signal failure; HS failure to spring return from open to A-Auto.	Status monitor light and indicating light in MCR.	Loss of redundancy in isolation of Fuel Handling Area Exhaust Fan A-A.	None. Train B Damper 0-FCO-30-138 provides isolation and maintains the ABSCE.	Damper fails closed on loss of Train A 125 Vdc power. Train A (0-FCO-30-137) and Train B (0-FCO-30-138) dampers, in series, are provided with non-safety control air and both dampers fail closed on loss of control air. Independence of Train A and Train B isolation signals is discussed in "Remarks" under Items 1 and 2 of this table. Damper failure to open is not listed since the damper has no safety function to open for DBE mitigation.
10	Isolation Damper 0-FCO-30-138 Train B	Closes on ABI or high rad in refueling area signal to isolate Fuel Handling Area Exhaust Fan A-A and to establish boundary for ABGTS.	Stuck open, fails to close, or spuriously opens.	Mechanical failure; hot short in control wiring; Train B ABI or high rad in refueling area signal failure; HS failure to spring return from open to A-Auto.	Status monitor light and indicating light in MCR.	Loss of redundancy in isolation of Fuel Handling Area Exhaust Fan A-A.	None. Train A Damper 0-FCO-30-137 provides isolation and maintains the ABSCE.	Damper fails closed on loss of Train A 125 Vdc power. Train A (0-FCO-30-137) and Train B (0-FCO-30-138) dampers, in series, are provided with non-safety control air and both dampers fail closed on loss of control air. Independence of Train A and Train B isolation signals is discussed in "Remarks" under Items 1 and 2 of this table. Damper failure to open is not listed since the damper has no safety function to open for DBE mitigation.

Table 6.2.3-3 Failure Modes and Effects Analysis for the ABGTS (Continued)

ITEM NO.	COMPONENT	FUNCTION	FAILURE MODE	POTENTIAL CAUSE	METHOD OF DETECTION	EFFECT ON SYSTEM	EFFECT ON PLANT	REMARKS
11	Isolation Damper 0-FCO-30-140 Train A	Closes on ABI or high rad in refueling area signal to isolate Fuel Handling Area Exhaust Fan B-B and to establish boundary for ABGTS.	Stuck open, fails to close, or spuriously opens.	Mechanical failure; hot short in control wiring; Train A ABI or high rad in refueling area signal failure; HS failure to spring return from open to A-Auto.	Status monitor light and indicating light in MCR.	Loss of redundancy in isolation of Fuel Handling Area Exhaust Fan B-B.	None. Train B Damper 0-FCO-30-141 provides isolation and maintains the ABSCE.	Damper fails closed on loss of Train A 125 Vdc power. Train A (0-FCO-30-140) and Train B (0-FCO-30-141) dampers, in series, are provided with non-safety control air and both dampers fail closed on loss of control air. Independence of Train A and Train B isolation signals is discussed in "Remarks" under Items 1 and 2 of this table. Damper failure to open is not listed since the damper has no safety function to open for DBE mitigation.
12	Isolation Damper 0-FCO-30-141 Train B	Closes on ABI or high rad in refueling area signal to isolate Fuel Handling Area Exhaust Fan B-B and to establish boundary for ABGTS.	Stuck open, fails to close, or spuriously opens.	Mechanical failure; hot short in control wiring; Train B ABI or high rad in refueling area signal failure; HS failure to spring return from open to A-Auto.	Status monitor light and indicating light in MCR.	Loss of redundancy in isolation of Fuel Handling Area Exhaust Fan B-B.	None. Train A Damper 0-FCO-30-140 provides isolation and maintains the ABSCE.	Damper fails closed on loss of Train B 125 Vdc power. Train A (0-FCO-30-140) and Train B (0-FCO-30-141) dampers, in series, are provided with non-safety control air and both dampers fail closed on loss of control air. Independence of Train A and Train B isolation signals is discussed in "Remarks" under Items 1 and 2 of this table. Damper failure to open is not listed since the damper has no safety function to open for DBE mitigation.

Table 6.2.3-3 Failure Modes and Effects Analysis for the ABGTS (Continued)

ITEM NO.	COMPONENT	FUNCTION	FAILURE MODE	POTENTIAL CAUSE	METHOD OF DETECTION	EFFECT ON SYSTEM	EFFECT ON PLANT	REMARKS
13	Isolation Damper 2-FCO-30-21 Train A	Closes on ABI or high rad in refueling area signal to isolate AB Gen Supply Fans 2A-A and 2B-B and to establish boundary for ABGTS.	Stuck open, fails to close, or spuriously opens.	Mechanical failure; hot short in control wiring; Train A ABI or high rad in refueling area signal failure; HS failure to spring return from open to A-Auto.	Status monitor light and indicating light in MCR.	Loss of redundancy in isolation of part of ductwork on Unit 2 side of AB.	None. Train B Damper 2-FCO-30-22 provides isolation and maintains the ABSCE.	Damper fails closed on loss of Train A 125 Vdc power. Train A (2-FCO-30-21) and Train B (2-FCO-30-22) dampers, in series, are provided with non-safety control air and both dampers fail closed on loss of control air. Independence of Train A and Train B isolation signals is discussed in "Remarks" under Items 1 and 2 of this table. Damper failure to open is not listed since the damper has no safety function to open for DBE mitigation.
14	Isolation Damper 2-FCO-30-22 Train B	Closes on ABI or high rad in refueling area signal to isolate AB Gen Supply Fans 2A-A and 2B-B and to establish boundary for ABGTS.	Stuck open, fails to close, or spuriously opens.	Mechanical failure; hot short in control wiring; Train B ABI or high rad in refueling area signal failure; HS failure to spring return from open to A-Auto.	Status monitor light and indicating light in MCR.	Loss of redundancy in isolation of part of ductwork on Unit 2 side of AB.	None. Train A Damper 2-FCO-30-21 provides isolation and maintains the ABSCE.	Damper fails closed on loss of Train B 125 Vdc power. Train A (2-FCO-30-21) and Train B (2-FCO-30-22) dampers, in series, are provided with non-safety control air and both dampers fail closed on loss of control air. Independence of Train A and Train B isolation signals is discussed in "Remarks" under Items 1 and 2 of this table. Damper failure to open is not listed since the damper has no safety function to open for DBE mitigation.

Table 6.2.3-3 Failure Modes and Effects Analysis for the ABGTS (Continued)

ITEM NO.	COMPONENT	FUNCTION	FAILURE MODE	POTENTIAL CAUSE	METHOD OF DETECTION	EFFECT ON SYSTEM	EFFECT ON PLANT	REMARKS
15	Isolation Damper 1-FCO-30-86 Train A	Closes on ABI or high rad in refueling area signal to isolate AB Gen Supply Fans 1A-A and 1B-B and to establish boundary for ABGTS.	Stuck open, fails to close, or spuriously opens.	Mechanical failure; hot short in control wiring; Train A ABI or high rad in refueling area signal failure; HS failure to spring return from open to A-Auto.	Status monitor light and indicating light in MCR.	Loss of redundancy in isolation of part of ductwork on Unit 1 side of AB.	None. Train B Damper 1-FCO-30-87 provides isolation and maintains the ABSCE.	Damper fails closed on loss of Train A 125 Vdc power. Train A (1-FCO-30-86) and Train B (1-FCO-30-87) dampers, in series, are provided with non-safety control air and both dampers fail closed on loss of control air. Independence of Train A and Train B isolation signals is discussed in "Remarks" under Items 1 and 2 of this table. Damper failure to open is not listed since the damper has no safety function to open for DBE mitigation.
16	Isolation Damper 1-FCO-30-87 Train B	Closes on ABI or high rad in refueling area signal to isolate AB Gen Supply Fans 1A-A and 1B-B and to establish boundary for ABGTS.	Stuck open, fails to close, or spuriously opens.	Mechanical failure; hot short in control wiring; Train B ABI or high rad in refueling area signal failure; HS failure to spring return from open to A-Auto.	Status monitor light and indicating light in MCR.	Loss of redundancy in isolation of part of ductwork on Unit 1 side of AB.	None. Train A Damper 1-FCO-30-86 provides isolation and maintains the ABSCE.	Damper fails closed on loss of Train B 125 Vdc power. Train A (1-FCO-30-86) and Train B (1-FCO-30-87) dampers, in series, are provided with non-safety control air and both dampers fail closed on loss of control air. Independence of Train A and Train B isolation signals is discussed in "Remarks" under Items 1 and 2 of this table. Damper failure to open is not listed since the damper has no safety function to open for DBE mitigation.

Table 6.2.3-3 Failure Modes and Effects Analysis for the ABGTS (Continued)

ITEM NO.	COMPONENT	FUNCTION	FAILURE MODE	POTENTIAL CAUSE	METHOD OF DETECTION	EFFECT ON SYSTEM	EFFECT ON PLANT	REMARKS
17	Isolation Damper 1-FCO-30-106 Train A	Closes on ABI or high rad in refueling area signal to isolate AB Gen Supply Fans 1A-A and 1B-B and to establish boundary for ABGTS.	Stuck open, fails to close, or spuriously opens.	Mechanical failure; hot short in control wiring; Train A ABI or high rad in refueling area signal failure; HS failure to spring return from open to A-Auto.	Status monitor light and indicating light in MCR.	Loss of redundancy in isolation of part of ductwork on Unit 1 side of AB.	None. Train B Damper 1-FCO-30-107 provides isolation and maintains the ABSCE.	Damper fails closed on loss of Train A 125 Vdc power. Train A (1-FCO-30-106) and Train B (1-FCO-30-107) dampers, in series, are provided with non-safety control air and both dampers fail closed on loss of control air. Independence of Train A and Train B isolation signals is discussed in "Remarks" under Items 1 and 2 of this table. Damper failure to open is not listed since the damper has no safety function to open for DBE mitigation.
18	Isolation Damper 1-FCO-30-107 Train B	Closes on ABI or high rad in refueling area signal to isolate AB Gen Supply Fans 1A-A and 1B-B and to establish boundary for ABGTS.	Stuck open, fails to close, or spuriously opens.	Mechanical failure; hot short in control wiring; Train B ABI or high rad in refueling area signal failure; HS failure to spring return from open to A-Auto.	Status monitor light and indicating light in MCR.	Loss of redundancy in isolation of part of ductwork on Unit 1 side of AB.	None. Train A Damper 1-FCO-30-106 provides isolation and maintains the ABSCE.	Damper fails closed on loss of Train B 125 Vdc power. Train A (1-FCO-30-106) and Train B (1-FCO-30-107) dampers, in series, are provided with non-safety control air and both dampers fail closed on loss of control air. Independence of Train A and Train B isolation signals is discussed in "Remarks" under Items 1 and 2 of this table. Damper failure to open is not listed since the damper has no safety function to open for DBE mitigation.

Table 6.2.3-3 Failure Modes and Effects Analysis for the ABGTS (Continued)

ITEM NO.	COMPONENT	FUNCTION	FAILURE MODE	POTENTIAL CAUSE	METHOD OF DETECTION	EFFECT ON SYSTEM	EFFECT ON PLANT	REMARKS
19	Isolation Damper 2-FCO-30-108 Train A	Closes on ABI or high rad in refueling area signal to isolate AB Gen Supply Fans 2A-A and 2B-B and to establish boundary for ABGTS.	Stuck open, fails to close, or spuriously opens.	Mechanical failure; hot short in control wiring; Train A ABI or high rad in refueling area signal failure; HS failure to spring return from open to A-Auto.	Status monitor light and indicating light in MCR.	Loss of redundancy in isolation of part of ductwork on Unit 2 side of AB.	None. Train B Damper 2-FCO-30-109 provides isolation and maintains the ABSCE.	Damper fails closed on loss of Train A 125 Vdc power. Train A (2-FCO-30-108) and Train B (2-FCO-30-109) dampers, in series, are provided with non-safety control air and both dampers fail closed on loss of control air. Independence of Train A and Train B isolation signals is discussed in "Remarks" under Items 1 and 2 of this table. Damper failure to open is not listed since the damper has no safety function to open for DBE mitigation.
20	Isolation Damper 2-FCO-30-109 Train B	Closes on ABI or high rad in refueling area signal to isolate AB Gen Supply Fans 2A-A and 2B-B and to establish boundary for ABGTS.	Stuck open, fails to close, or spuriously opens.	Mechanical failure; hot short in control wiring; Train B ABI or high rad in refueling area signal failure; HS failure to spring return from open to A-Auto.	Status monitor light and indicating light in MCR.	Loss of redundancy in isolation of part of ductwork on Unit 2 side of AB.	None. Train A Damper 2-FCO-30-108 provides isolation and maintains the ABSCE.	Damper fails closed on loss of Train B 125 Vdc power. Train A (2-FCO-30-108) and Train B (2-FCO-30-109) dampers, in series, are provided with non-safety control air and both dampers fail closed on loss of control air. Independence of Train A and Train B isolation signals is discussed in "Remarks" under Items 1 and 2 of this table. Damper failure to open is not listed since the damper has no safety function to open for DBE mitigation.

Table 6.2.3-3 Failure Modes and Effects Analysis for the ABGTS (Continued)

ITEM NO.	COMPONENT	FUNCTION	FAILURE MODE	POTENTIAL CAUSE	METHOD OF DETECTION	EFFECT ON SYSTEM	EFFECT ON PLANT	REMARKS
21	Isolation Damper 1-FCO-30-160 Train A	Closes on ABI or high rad in refueling area signal to isolate AB Gen Exhaust Fan 1A-A suction and to establish boundary for ABGTS.	Stuck open, fails to close, or spuriously opens.	Mechanical failure; hot short in control wiring; Train A ABI or high rad in refueling area signal failure; HS failure to spring return from open to A-Auto.	Status monitor light and indicating light in MCR.	Loss of redundancy in isolation of AB Gen Exhaust Fan 1A-A.	None. Train B Damper 1-FCO-30-161 provides isolation and maintains the ABSCE.	Damper fails closed on loss of Train A 125 Vdc power. Train A (1-FCO-30-160) and Train B (1-FCO-30-161) dampers, in series, are provided with non-safety control air and both dampers fail closed on loss of control air. Independence of Train A and Train B isolation signals is discussed in "Remarks" under Items 1 and 2 of this table. Damper failure to open is not listed since the damper has no safety function to open for DBE mitigation.
22	Isolation Damper 1-FCO-30-161 Train B	Closes on ABI or high rad in refueling area signal to isolate AB Gen Exhaust Fan 1A-A suction and to establish boundary for ABGTS.	Stuck open, fails to close, or spuriously opens.	Mechanical failure; hot short in control wiring; Train B ABI or high rad in refueling area signal failure; HS failure to spring return from open to A-Auto.	Status monitor light and indicating light in MCR.	Loss of redundancy in isolation of AB Gen Exhaust Fan 1A-A.	None. Train A Damper 1-FCO-30-160 provides isolation and maintains the ABSCE.	Damper fails closed on loss of Train B 125 Vdc power. Train B (1-FCO-30-160) and Train B (1-FCO-30-161) dampers, in series, are provided with non-safety control air and both dampers fail closed on loss of control air. Independence of Train A and Train B isolation signals is discussed in "Remarks" under Items 1 and 2 of this table. Damper failure to open is not listed since the damper has no safety function to open for DBE mitigation.

Table 6.2.3-3 Failure Modes and Effects Analysis for the ABGTS (Continued)

ITEM NO.	COMPONENT	FUNCTION	FAILURE MODE	POTENTIAL CAUSE	METHOD OF DETECTION	EFFECT ON SYSTEM	EFFECT ON PLANT	REMARKS
23	Isolation Damper 1-FCO-30-166 Train A	Closes on ABI or high rad in refueling area signal to isolate AB Gen Exhaust Fan 1B-B suction and to establish boundary for ABGTS.	Stuck open, fails to close, or spuriously opens.	Mechanical failure; hot short in control wiring; Train A ABI or high rad in refueling area signal failure; HS failure to spring return from open to A-Auto.	Status monitor light and indicating light in MCR.	Loss of redundancy in isolation of AB Gen Exhaust Fan 1B-B.	None. Train B Damper 1-FCO-30-167 provides isolation and maintains the ABSCE.	Damper fails closed on loss of Train A 125 Vdc power. Train A (1-FCO-30-166) and Train B (1-FCO-30-167) dampers, in series, are provided with non-safety control air and both dampers fail closed on loss of control air. Independence of Train A and Train B isolation signals is discussed in "Remarks" under Items 1 and 2 of this table. Damper failure to open is not listed since the damper has no safety function to open for DBE mitigation.
24	Isolation Damper 1-FCO-30-167 Train B	Closes on ABI or high rad in refueling area signal to isolate AB Gen Exhaust Fan 1B-B suction and to establish boundary for ABGTS.	Stuck open, fails to close, or spuriously opens.	Mechanical failure; hot short in control wiring; Train B ABI or high rad in refueling area signal failure; HS failure to spring return from open to A-Auto.	Status monitor light and indicating light in MCR.	Loss of redundancy in isolation of AB Gen Exhaust Fan 1B-B.	None. Train A Damper 1-FCO-30-166 provides isolation and maintains the ABSCE.	Damper fails closed on loss of Train B 125 Vdc power. Train B (1-FCO-30-166) and Train B (1-FCO-30-167) dampers, in series, are provided with non-safety control air and both dampers fail closed on loss of control air. Independence of Train A and Train B isolation signals is discussed in "Remarks" under Items 1 and 2 of this table. Damper failure to open is not listed since the damper has no safety function to open for DBE mitigation.

Table 6.2.3-3 Failure Modes and Effects Analysis for the ABGTS (Continued)

ITEM NO.	COMPONENT	FUNCTION	FAILURE MODE	POTENTIAL CAUSE	METHOD OF DETECTION	EFFECT ON SYSTEM	EFFECT ON PLANT	REMARKS
25	Isolation Damper 2-FCO-30-271 Train A	Closes on ABI or high rad in refueling area signal to isolate AB Gen Exhaust Fan 2A-A suction and to establish boundary for ABGTS.	Stuck open, fails to close, or spuriously opens.	Mechanical failure; hot short in control wiring; Train A ABI or high rad in refueling area signal failure; HS failure to spring return from open to A-Auto.	Status monitor light and indicating light in MCR.	Loss of redundancy in isolation of AB Gen Exhaust Fan 2A-A.	None. Train B Damper 2-FCO-30-272 provides isolation and maintains the ABSCE.	Damper fails closed on loss of Train A 125 Vdc power. Train A (2-FCO-30-271) and Train B (2-FCO-30-272) dampers, in series, are provided with non-safety control air and both dampers fail closed on loss of control air. Independence of Train A and Train B isolation signals is discussed in "Remarks" under Items 1 and 2 of this table. Damper failure to open is not listed since the damper has no safety function to open for DBE mitigation.
26	Isolation Damper 2-FCO-30-272 Train B	Closes on ABI or high rad in refueling area signal to isolate AB Gen Exhaust Fan 2A-A suction and to establish boundary for ABGTS.	Stuck open, fails to close, or spuriously opens.	Mechanical failure; hot short in control wiring; Train B ABI or high rad in refueling area signal failure; HS failure to spring return from open to A-Auto.	Status monitor light and indicating light in MCR.	Loss of redundancy in isolation of AB Gen Exhaust Fan 2A-A.	None. Train A Damper 2-FCO-30-271 provides isolation and maintains the ABSCE.	Damper fails closed on loss of Train B 125 Vdc power. Train A (2-FCO-30-271) and Train B (2-FCO-30-272) dampers, in series, are provided with non-safety control air and both dampers fail closed on loss of control air. Independence of Train A and Train B isolation signals is discussed in "Remarks" under Items 1 and 2 of this table. Damper failure to open is not listed since the damper has no safety function to open for DBE mitigation.

Table 6.2.3-3 Failure Modes and Effects Analysis for the ABGTS (Continued)

ITEM NO.	COMPONENT	FUNCTION	FAILURE MODE	POTENTIAL CAUSE	METHOD OF DETECTION	EFFECT ON SYSTEM	EFFECT ON PLANT	REMARKS
27	Isolation Damper 2-FCO-30-275 Train A	Closes on ABI or high rad in refueling area signal to isolate AB Gen Exhaust Fan 2B-B suction and Exhaust Fan B-B and to establish boundary for ABGTS.	Stuck open, fails to close, or spuriously opens.	Mechanical failure; hot short in control wiring; Train A ABI or high rad in refueling area signal failure; HS failure to spring return from open to A-Auto.	Status monitor light and indicating light in MCR.	Loss of redundancy in isolation of AB Gen Exhaust Fan 2B-B.	None. Train B Damper 2-FCO-30-276 provides isolation and maintains the ABSCE.	Damper fails closed on loss of Train A 125 Vdc power. Train A (2-FCV-30-275) and Train B (2-FCV-30-276) dampers, in series, are provided with non-safety control air and both dampers fail closed on loss of control air. Independence of Train A and Train B isolation signals is discussed in "Remarks" under Items 1 and 2 of this table. Damper failure to open is not listed since the damper has no safety function to open for DBE mitigation.
28	Isolation Damper 2-FCO-30-276 Train B	Closes on ABI or high rad in refueling area signal to isolate AB Gen Exhaust Fan 2B-B suction area and to establish boundary for ABGTS.	Stuck open, fails to close, or spuriously opens.	Mechanical failure; hot short in control wiring; Train B ABI or high rad in refueling area signal failure; HS failure to spring return from open to A-Auto.	Status monitor light and indicating light in MCR.	Loss of redundancy in isolation of AB Gen Exhaust Fan 2B-B.	None. Train A Damper 2-FCO-30-275 provides isolation and maintains the ABSCE.	Damper fails closed on loss of Train B 125 Vdc power. Train A (2-FCV-30-275) and Train B (2-FCV-30-276) dampers, in series, are provided with non-safety control air and both dampers fail closed on loss of control air. Independence of Train A and Train B isolation signals is discussed in "Remarks" under Items 1 and 2 of this table. Damper failure to open is not listed since the damper has no safety function to open for DBE mitigation.

Table 6.2.3-3 Failure Modes and Effects Analysis for the ABGTS (Continued)

ITEM NO.	COMPONENT	FUNCTION	FAILURE MODE	POTENTIAL CAUSE	METHOD OF DETECTION	EFFECT ON SYSTEM	EFFECT ON PLANT	REMARKS
29	Isolation Damper 1-FCO-30-294 Train A	Closes on ABI or high rad in refueling area signal to isolate Purge Air Supply Fan inlet duct and to establish boundary for ABGTS.	Stuck open, fails to close, or spuriously opens.	Mechanical failure; hot short in control wiring; Train A ABI or high rad in refueling area signal failure; HS failure to spring return from open to A-Auto.	Status monitor light and indicating light in MCR.	Loss of redundancy in isolation of Purge Air Supply Fan inlet duct.	None. Train B Damper 1-FCO-30-295 provides isolation and maintains the ABSCE.	Damper fails closed on loss of Train A 125 Vdc power. Train A (1-FCV-30-294) and Train B (1-FCV-30-295) dampers, in series, are provided with non-safety control air and both dampers fail closed on loss of control air. Independence of Train A and Train B isolation signals is discussed in "Remarks" under Items 1 and 2 of this table. Damper failure to open is not listed since the damper has no safety function to open for DBE mitigation.
30	Isolation Damper 1-FCO-30-295 Train B	Closes on ABI or high rad in refueling area signal to isolate Purge Air Supply Fan inlet duct and to establish boundary for ABGTS.	Stuck open, fails to close, or spuriously opens.	Mechanical failure; hot short in control wiring; Train B ABI or high rad in refueling area signal failure; HS failure to spring return from open to A-Auto.	Status monitor light and indicating light in MCR.	Loss of redundancy in isolation of Purge Air Supply Fan inlet duct.	None. Train A Damper 1-FCO-30-294 provides isolation and maintains the ABSCE.	Damper fails closed on loss of Train B 125 Vdc power. Train A (1-FCV-30-294) and Train B (1-FCV-30-295) dampers, in series, are provided with non-safety control air and both dampers fail closed on loss of control air. Independence of Train A and Train B isolation signals is discussed in "Remarks" under Items 1 and 2 of this table. Damper failure to open is not listed since the damper has no safety function to open for DBE mitigation.

Table 6.2.3-3 Failure Modes and Effects Analysis for the ABGTS (Continued)

ITEM NO.	COMPONENT	FUNCTION	FAILURE MODE	POTENTIAL CAUSE	METHOD OF DETECTION	EFFECT ON SYSTEM	EFFECT ON PLANT	REMARKS
31	Isolation Damper 0-FCO-30-122 Train A	Closes on ABI or high rad in refueling area signal to isolate the cask loading area exhaust and to establish boundary for ABGTS.	Stuck open, fails to close, or spuriously opens.	Mechanical failure; hot short in control wiring; Train A ABI or high rad in refueling area signal failure; HS failure to spring return from open to A-Auto.	Status monitor light and indicating light in MCR.	Loss of redundancy in isolation of cask loading area exhaust.	None. Train B Damper 0-FCO-30-123 provides isolation and maintains the ABSCE.	Damper fails closed on loss of Train A 125 Vdc power. Train A (0-FCO-30-122) and Train B (0-FCO-30-123) dampers, in series, are provided with non-safety control air and both dampers fail closed on loss of control air. Independence of Train A and Train B isolation signals is discussed in "Remarks" under Items 1 and 2 of this table. Damper failure to open is not listed since the damper has no safety function to open for DBE mitigation.
32	Isolation Damper 0-FCO-30-123 Train B	Closes on ABI or high rad in refueling area signal to isolate the cask loading area exhaust and to establish boundary for ABGTS.	Stuck open, fails to close, or spuriously opens.	Mechanical failure; hot short in control wiring; Train B ABI or high rad in refueling area signal failure; HS failure to spring return from open to A-Auto.	Status monitor light and indicating light in MCR.	Loss of redundancy in isolation of cask loading area exhaust.	None. Train A Damper 0-FCO-30-122 provides isolation and maintains the ABSCE.	Damper fails closed on loss of Train B 125 Vdc power. Train A (0-FCO-30-122) and Train B (0-FCO-30-123) dampers, in series, are provided with non-safety control air and both dampers fail closed on loss of control air. Independence of Train A and Train B isolation signals is discussed in "Remarks" under Items 1 and 2 of this table. Damper failure to open is not listed since the damper has no safety function to open for DBE mitigation.

Table 6.2.3-3 Failure Modes and Effects Analysis for the ABGTS (Continued)

ITEM NO.	COMPONENT	FUNCTION	FAILURE MODE	POTENTIAL CAUSE	METHOD OF DETECTION	EFFECT ON SYSTEM	EFFECT ON PLANT	REMARKS
33	Isolation Damper 0-FCO-30-129 Train A	Closes on ABI or high rad in refueling area signal to isolate the cask loading area supply and to establish boundary for ABGTS.	Stuck open, fails to close, or spuriously opens.	Mechanical failure; hot short in control wiring; Train A ABI or high rad in refueling area signal failure; HS failure to spring return from open to A-Auto.	Status monitor light and indicating light in MCR.	Loss of redundancy in isolation of cask loading area supply.	None. Train B Damper 0-FCO-30-130 provides isolation and maintains the ABSCE.	Damper fails closed on loss of Train A 125 Vdc power. Train A (0-FCO-30-129) and Train B (0-FCO-30-130) dampers, in series, are provided with non-safety control air and both dampers fail closed on loss of control air. Independence of Train A and Train B isolation signals is discussed in "Remarks" under Items 1 and 2 of this table. Damper failure to open is not listed since the damper has no safety function to open for DBE mitigation.
34	Isolation Damper 0-FCO-30-130 Train B	Closes on ABI or high rad in refueling area signal to isolate the cask loading area supply and to establish boundary for ABGTS.	Stuck open, fails to close, or spuriously opens.	Mechanical failure; hot short in control wiring; Train B ABI or high rad in refueling area signal failure; HS failure to spring return from open to A-Auto.	Status monitor light and indicating light in MCR.	Loss of redundancy in isolation of cask loading area supply.	None. Train A Damper 0-FCO-30-129 provides isolation and maintains the ABSCE.	Damper fails closed on loss of Train B 125 Vdc power. Train A (0-FCO-30-129) and Train B (0-FCO-30-130) dampers, in series, are provided with non-safety control air and both dampers fail closed on loss of control air. Independence of Train A and Train B isolation signals is discussed in "Remarks" under Items 1 and 2 of this table. Damper failure to open is not listed since the damper has no safety function to open for DBE mitigation.

Table 6.2.3-3 Failure Modes and Effects Analysis for the ABGTS (Continued)

ITEM NO.	COMPONENT	FUNCTION	FAILURE MODE	POTENTIAL CAUSE	METHOD OF DETECTION	EFFECT ON SYSTEM	EFFECT ON PLANT	REMARKS
35	Isolation Damper 0-FCO-31-350 Train A	Closes on ABI or high rad in refueling area signal to isolate PASF outside air intake and to establish boundary for ABGTS.	Stuck open, fails to close, or spuriously opens.	Mechanical failure; hot short in control wiring; Train A ABI or high rad in refueling area signal failure; HS failure to spring return from open to A-Auto.	Status monitor light and indicating light in MCR.	Loss of redundancy in isolation of PASF outside air intake.	None. Train B Damper 0-FCO-31-365 provides isolation and maintains the ABSCE.	Damper fails closed on loss of Train A 125 Vdc power. Train A (0-FCO-31-350) and Train B (0-FCO-31-365) dampers are in series. Independence of Train A and Train B isolation signals is discussed in "Remarks" under Items 1 and 2 of this table. Damper failure to open is not listed since the damper has no safety function to open for DBE mitigation.
36	Isolation Damper 0-FCO-31-365 Train B	Closes on ABI or high rad in refueling area signal to isolate PASF outside air intake and to establish boundary for ABGTS.	Stuck open, fails to close, or spuriously opens.	Mechanical failure; hot short in control wiring; Train B ABI or high rad in refueling area signal failure; HS failure to spring return from open to A-Auto.	Status monitor light and indicating light in MCR.	Loss of redundancy in isolation of PASF outside air intake.	None. Train A Damper 0-FCO-31-350 provides isolation and maintains the ABSCE.	Damper fails closed on loss of Train B 125 Vdc power. Train A (0-FCV-31-350) and Train B (0-FCV-31-365) dampers are in series. Independence of Train A and Train B isolation signals is discussed in "Remarks" under Items 1 and 2 of this table. Damper failure to open is not listed since the damper has no safety function to open for DBE mitigation.
37	Isolation Damper 1-FCO-31-342 Train A	Closes on ABI or high rad in refueling area signal to isolate PASF Room No. 1 exhaust and to establish boundary for ABGTS.	Stuck open, fails to close, or spuriously opens.	Mechanical failure; hot short in control wiring; Train A ABI or high rad in refueling area signal failure; HS failure to spring return from open to A-Auto.	Status monitor light and indicating light in MCR.	Loss of redundancy in isolation of PASF Room No. 1 exhaust.	None. Train B Damper 1-FCO-31-343 provides isolation and maintains the ABSCE.	Damper fails closed on loss of Train A 125 Vdc power. Train A (1-FCO-31-342) and Train B (1-FCO-31-343) dampers are in series. Independence of Train A and Train B isolation signals is discussed in "Remarks" under Items 1 and 2 of this table. Damper failure to open is not listed since the damper has no safety function to open for DBE mitigation.

Table 6.2.3-3 Failure Modes and Effects Analysis for the ABGTS (Continued)

ITEM NO.	COMPONENT	FUNCTION	FAILURE MODE	POTENTIAL CAUSE	METHOD OF DETECTION	EFFECT ON SYSTEM	EFFECT ON PLANT	REMARKS
38	Isolation Damper 1-FCO-31-343 Train B	Closes on ABI or high rad in refueling area signal to isolate PASF Room No. 1 exhaust and to establish boundary for ABGTS.	Stuck open, fails to close, or spuriously opens.	Mechanical failure; hot short in control wiring; Train B ABI or high rad in refueling area signal failure; HS failure to spring return from open to A-Auto.	Status monitor light and indicating light in MCR.	Loss of redundancy in isolation of PASF Room No. 1 exhaust.	None. Train A Damper 1-FCO-31-342 provides isolation and maintains the ABSCE.	Damper fails closed on loss of Train B 125 Vdc power. Train A (1-FCO-31-342) and Train B (1-FCO-31-343) dampers are in series. Independence of Train A and Train B isolation signals is discussed in "Remarks" under Items 1 and 2 of this table. Damper failure to open is not listed since the damper has no safety function to open for DBE mitigation.

Table 6.2.3-3 Failure Modes and Effects Analysis for the ABGTS (Continued)

ITEM NO.	COMPONENT	FUNCTION	FAILURE MODE	POTENTIAL CAUSE	METHOD OF DETECTION	EFFECT ON SYSTEM	EFFECT ON PLANT	REMARKS
39	Modulating Damper 0-FCO-30-149 Train A	Regulates the amount of outside air to maintain ABSCE at negative pressure.	Allows more outside air than required (stuck open or spuriously excessive opening).	Train A vital ac power failure; Train A aux. control air failure; spurious high dP signal; failure of E/I or I/P converter; positioner mechanical failure.	"Hi Press. in Aux. Bldg." alarm.	See "Remarks" column.	None. See "Remarks" column.	ABI signal stops AB gen supply fans automatically. The Aux. Bldg. is designed for minimum leakage and, with at least one ABGTS exhaust fan running, failure of the modulating damper can cause pressure in the Aux. Bldg. to approach outside pressure, but the AB pressure cannot become positive with respect to the outside. The DPIS used for alarm in the control room is separate and independent from the DPIS used for modulating control of the damper. If the (non-safety) alarm functions, the operator can either close the associated Isolation Damper 0-FCO-30-280 or, if only one ABGTS exhaust fan is in operation, can start the redundant fan to maintain negative pressure.
			Does not allow the required amount of outside air (stuck closed or spurious inadequate opening).	Train A vital ac power failure; Train A aux. control air failure; spurious low dP signal from 0-FCO-30-149; failure of E/I or I/P converter; positioner mechanical failure.		None. Train B Modulating Damper 0-FCO-30-148 will open to allow sufficient outside air to control the negative pressure.	None.	Modulating Dampers 0-FCO-30-148 and 0-FCO-30-149 are provided with train-separated, safety-grade auxiliary control air.

Table 6.2.3-3 Failure Modes and Effects Analysis for the ABGTS (Continued)

ITEM NO.	COMPONENT	FUNCTION	FAILURE MODE	POTENTIAL CAUSE	METHOD OF DETECTION	EFFECT ON SYSTEM	EFFECT ON PLANT	REMARKS
40	Modulating Damper 0-FCO-30-148 Train B	Regulates the amount of outside air to maintain ABSCE at negative pressure.	Allows more outside air than required (stuck open or spuriously excessive opening).	Train B vital ac power failure; Train B aux. control air failure; spurious high dP signal; failure of E/I or I/P converter; positioner mechanical failure.	"Hi Press. in Aux. Bldg." alarm.	See "Remarks" column.	None. See "Remarks" column.	ABI signal stops AB gen supply fans automatically. The Aux. Bldg. is designed for minimum leakage and, with no air coming in and with at least one ABGTS exhaust fan running, failure of the modulating damper can cause pressure in the Aux. Bldg. to approach outside pressure, but the AB pressure cannot become positive with respect to the outside. The DPIS used for alarm in the control room is separate and independent from the DPIS used for modulating control of the damper. If the (non-safety) alarm functions, the operator can either close the associated Isolation Damper 0-FCO-30-279 or, if only one ABGTS exhaust fan is in operation, can start the redundant fan to maintain negative pressure.
			Does not allow the required amount of outside air (stuck closed or spurious inadequate opening).	Train B vital ac power failure; Train B aux. control air failure; spurious low dP signal from 0-FCO-30-149; failure of E/I or I/P converter; positioner mechanical failure.		None. Train A Modulating Damper 0-FCO-30-149 will open to allow sufficient outside air to control the negative pressure.	None.	Modulating Dampers 0-FCO-30-148 and 0-FCO-30-149 are provided with train-separated, safety-grade auxiliary control air.

Table 6.2.3-3 Failure Modes and Effects Analysis for the ABGTS (Continued)

ITEM NO.	COMPONENT	FUNCTION	FAILURE MODE	POTENTIAL CAUSE	METHOD OF DETECTION	EFFECT ON SYSTEM	EFFECT ON PLANT	REMARKS
41	ABGTS Vacuum Relief Line Isolation Damper 0-FCO-30-280 Train A	Provides flow path for outside air.	Fails to open, stuck closed, or spuriously closes.	Mechanical failure; Train A power failure; Train A aux. control air failure; operator error (HS in wrong position).	Indicating light in MCR.	Aux. Bldg. at more negative pressure (lower absolute pressure) than required to prevent leakage from outside.	None. See "Remarks" column.	Dampers 0-FCO-30-279 and 0-FCO-30-280 are provided with train-separated, safety-grade auxiliary control air. In addition, there are two vacuum breaker dampers, 0-DMP-30-1128 and 0-DMP-30-1129 in series which will admit outside air into the Bldg in case of increasing vacuum.
			Fails to close, stuck open, or spuriously opens.	Mechanical failure; operator error (HS in wrong position).	Indicating light in MCR.	None. Modulating Damper 0-FCO-30-149 can independently control amount of outside air.	None.	
42	ABGTS Vacuum Relief Line Isolation Damper 0-FCO-30-279 Train B	Provides flow path for outside air.	Fails to open, stuck closed, or spuriously closes.	Mechanical failure; Train B power failure; Train B aux. control air failure; operator error (HS in wrong position).	Ind. light in MCR.	Aux. Bldg. at more negative pressure (lower absolute pressure) than required to prevent leakage from outside.	None. See "Remarks" column.	Dampers 0-FCO-30-279 and 0-FCO-30-280 are provided with train-separated, safety-grade auxiliary control air. In addition, there are two vacuum breaker dampers, 0-DMP-30-1128 and 0-DMP-30-1129 in series which will admit outside air into the Bldg in case of increasing vacuum.
			Fails to close, stuck open, or spuriously opens.	Mechanical failure; operator error (HS in wrong position).	Indicating light in MCR.	None. Modulating Damper 0-FCO-30-148 can independently control amount of outside air.	None.	

Table 6.2.3-3 Failure Modes and Effects Analysis for the ABGTS (Continued)

ITEM NO.	COMPONENT	FUNCTION	FAILURE MODE	POTENTIAL CAUSE	METHOD OF DETECTION	EFFECT ON SYSTEM	EFFECT ON PLANT	REMARKS
43	Train A Emergency Power	Provides Class 1E diesel-backed power supply to active components of Train A of ABGTS.	Loss of or inadequate voltage.	Diesel generator failure; bus fault (Train A); operator error.	Alarm and indication in MCR.	Loss of redundancy in ABGTS exhaust flow paths.	None. Redundant Train B exhaust fan can maintain required negative pressure.	Train A isolation dampers are not directly affected since damper solenoids and control circuits are supplied either battery power or battery-backed vital ac power. Loss of power to the damper control circuits does not result in loss of redundancy since circuits are such that isolation dampers fail closed.
44	Train B Emergency Power	Provides Class 1E diesel-backed power supply to active components of Train B of ABGTS.	Loss of or inadequate voltage.	Diesel generator failure; bus fault (Train B); operator error.	Alarm and indication in MCR.	Loss of redundancy in ABGTS exhaust flow paths.	None. Redundant Train A exhaust fan can maintain required negative pressure.	Train B isolation dampers are not directly affected since damper solenoids and control circuits are supplied either battery power or battery-backed vital ac power. Loss of power to the damper control circuits does not result in loss of redundancy since circuits are such that isolation dampers fail closed.
45	Fire Dampers 0-ISV-31-3834 and 0-ISV-31-3845	Provide air flow path for common duct between ABGTS fans.	Spurious closure.	Failure of fusible link.	Low flow alarm.	Loss of redundancy in ABGTS. Low flow on 2-FS-30-157 will automatically start ABGTS Fan A-A if not running.	None.	Spurious closure of either or both has the same effect.
46	Deluge System	Floods the carbon adsorbers in event of fire.	Spurious actuation.	Failure of fusible link.		Loss of redundancy in ABGTS. Opposite train ABGTS fan is independent and remains available.	None.	

Table 6.2.3-3 Failure Modes and Effects Analysis for the ABGTS (Continued)

ITEM NO.	COMPONENT	FUNCTION	FAILURE MODE	POTENTIAL CAUSE	METHOD OF DETECTION	EFFECT ON SYSTEM	EFFECT ON PLANT	REMARKS
47	Ductwork in the ABSCE	Provides containment for air flow path.	Leakage.	Cracks.		Minimal localized reduction of negative pressure.	None.	Only small cracks are postulated due to seismic qualification. Minimal localized reduction of negative pressure will not affect the ABSCE. Loss of fluid (air) is not a concern since the system is submerged in the same fluid.
48	ABGTS Air Cleanup Unit A Heater	Controls humidity of exhaust air.	Fails to turn on or fails to operate.	Train A power failure; temperature sensing error.	Hi rad alarm in MCR for air to Shield Bldg. vent.	Loss of redundancy in ABGTS. Failure of heater will allow humid air into carbon filter reducing its efficiency (see "Remark #2").	None.	1. Failure to cutout is not considered in this table since this is the safe position for controlling air humidity. 2. Heater operation is tested every 31 days per procedure.
49	ABGTS Air Cleanup Unit B Heater	Controls humidity of exhaust air.	Fails to turn on or fails to operate.	Train B power failure; temperature sensing error.	Hi rad alarm in MCR for air to Shield Bldg. vent.	Loss of redundancy in ABGTS. Failure of heater will allow humid air into carbon filter reducing its efficiency (see "Remark #2").	None.	1. Failure to cutout is not considered in this table since this is the safe position for controlling air humidity. 2. Heater operation is tested every 31 days per procedure.

Table 6.2.3-3 Failure Modes and Effects Analysis for the ABGTS (Continued)

ITEM NO.	COMPONENT	FUNCTION	FAILURE MODE	POTENTIAL CAUSE	METHOD OF DETECTION	EFFECT ON SYSTEM	EFFECT ON PLANT	REMARKS
50	Aux. Bldg. vacuum relief damper 0-DMP-30-1128	Provides flow path for outside air.	Fails to open; stuck closed.	Mechanical Failure	Visual	Aux. Bldg at more negative press. (lower absolute press.) than req'd to prevent leakage to outside.	None.	This damper will only be used in the event that isolation damper 0-DMP-30-279 and 0-DMP-30-280 fail close. Therefore, for this damper to fail close, and one of the isolation dampers to fail close at the same time would consititute a double failure.
			Fails to close; stuck open.	Mechanical Failure	Visual	None. Vacuum relief damper 0-DMP-30-1129 can close independently and eliminate flow path from outside air.	None. See Remarks.	Vacuum relief dampers 0-DMP-30-1128 and 0-DMP-30-1129 are installed in series.
51	Aux. Bldg. vacuum relief damper 0-DMP-30-1129	Provides flow path for outside air.	Fails to open; stuck closed.	Mechanical Failure	Visual	Aux. Bldg. at more negative press. (lower absolute press.) than req'd to prevent leakage to outside.	None.	This damper will only be used in the event that isolation damper 0-DMP-30-279 and 0-DMP-30-280 fail close. Therefore, for this damper to fail close, and one of the isolation dampers to fail close at the same time would consititute a double failure.
			Fails to close; stuck open.	Mechanical Failure	Visual	None. Vacuum relief damper 0-DMP-30-1128 can close independently and eliminate flow path from outside air.	None. See Remarks.	Vacuum relief damper 0-DMP-30-1128 and 0-DMP-30-1129 are installed in series.

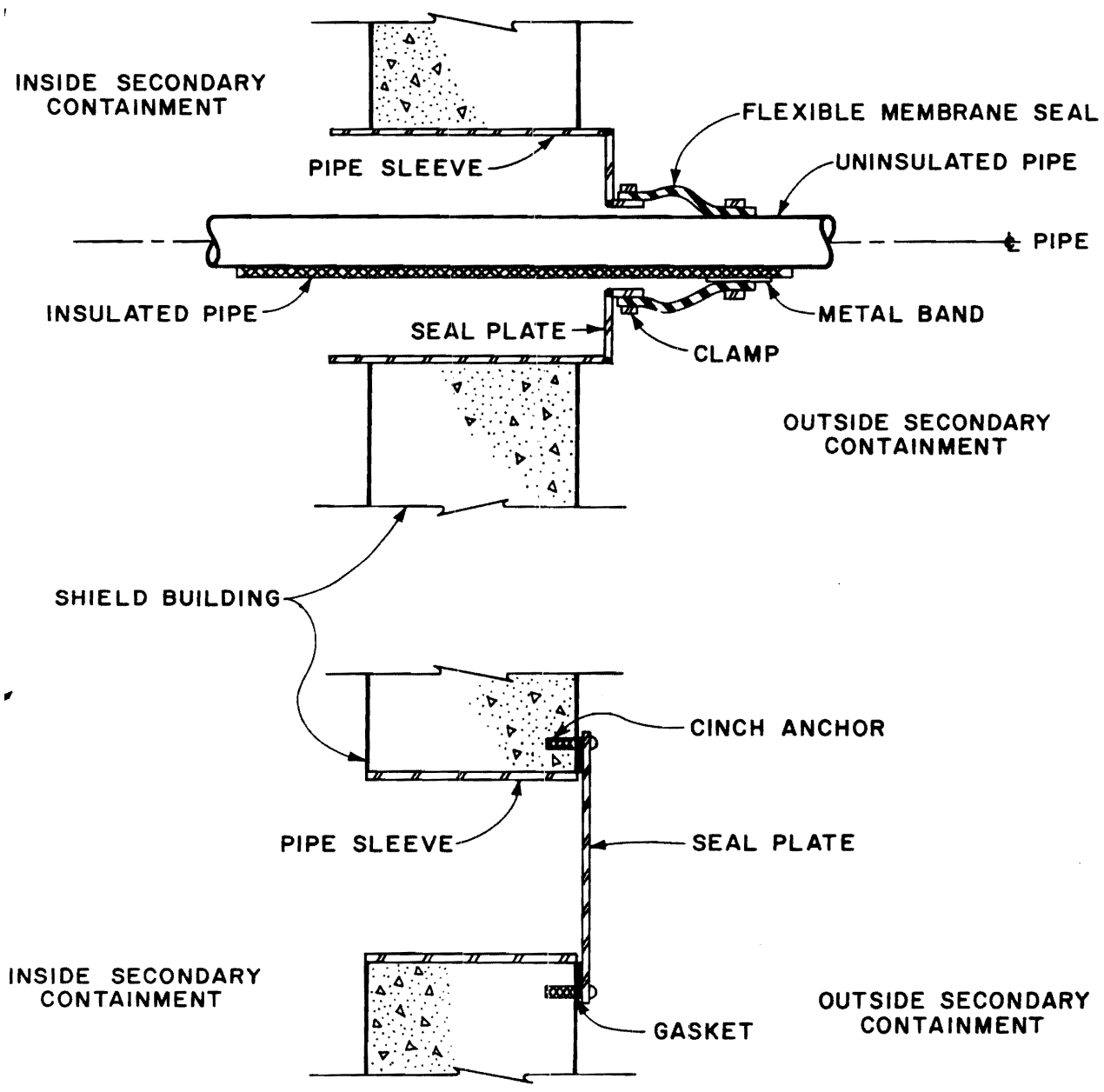

Figure 6.2.3-1 Typical Mechanical Penetration Seaks

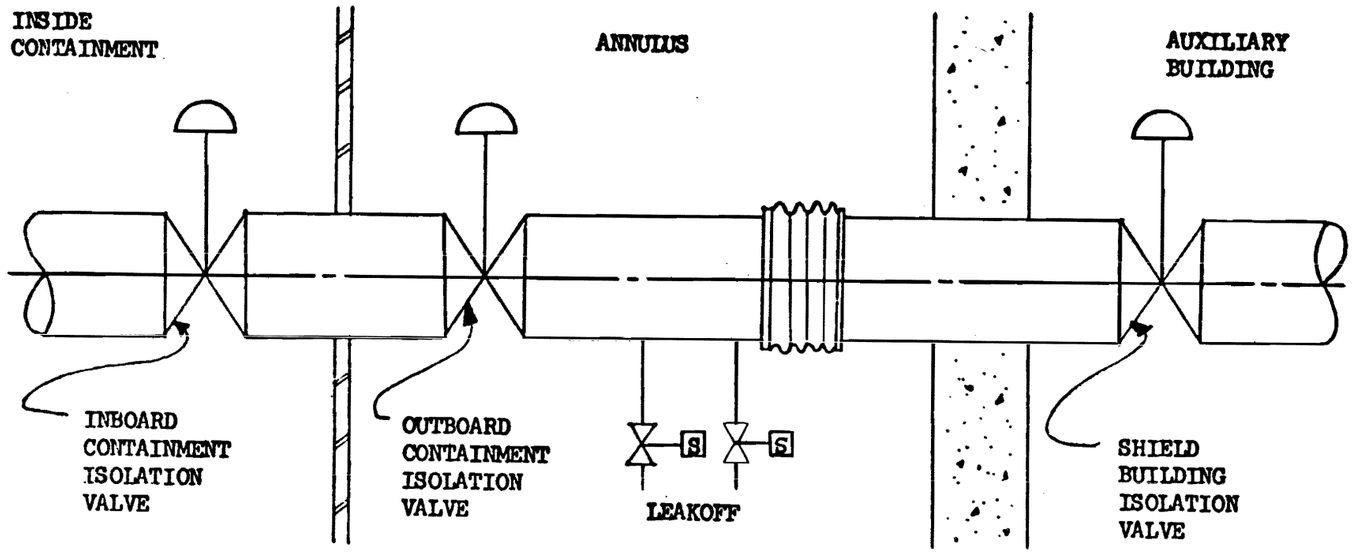

Figure 6.2.3-2 Typical Purge Penetration Arrangement

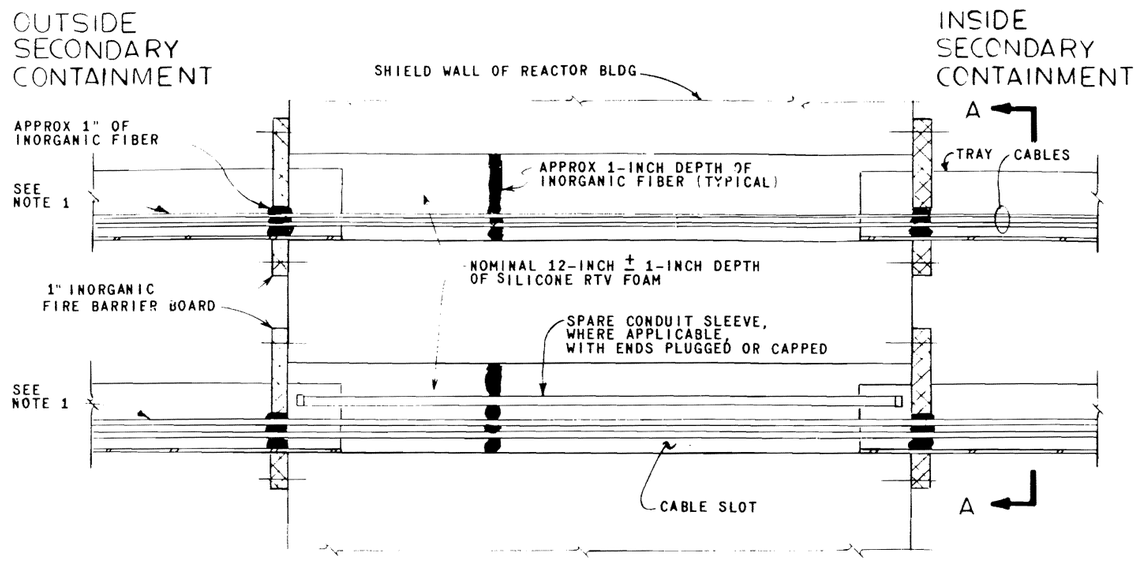

CABLE TRAY PENETRATION

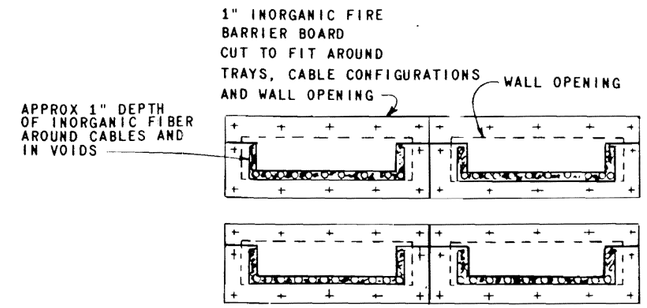

SECTION A-A

NOTES:

1. AFTER FIRE BARRIER BOARD IS IN PLACE, COAT EXPOSED SURFACES OF CABLES FOR A MINIMUM DISTANCE OF 5 FEET FROM FIRE BARRIER BOARD OR TO NEAREST ELECTRICAL PANEL OR ENCLOSURE WITH A 3/16" ± 1/16" (WET DEPTH) OF ABLATIVE MATERIAL (BOTH SIDES OF WALL).

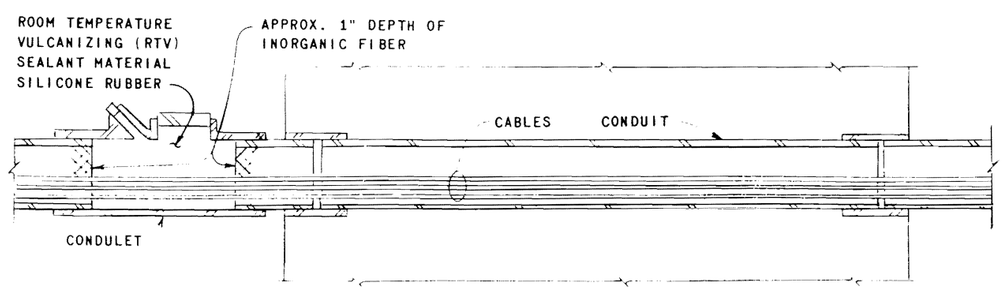

CONDUIT PENETRATION

Revised by Amendment 28

NOT TO SCALE

WATTS BAR NUCLEAR PLANT FINAL SAFETY ANALYSIS REPORT
TYPICAL ELECTRICAL PENETRATIONS FIGURE 6.2.3-3

Figure 6.2.3-3 Typical Electrical Penetrations

Security Information Withheld under 10CFR 2.390(d)(1)

[s5]

[redacted]

SECURITY SENSITIVE

Figure 6.2.3-4 Auxiliary Building Isolation Barrier

[e5]

Security Information Withheld under 10CFR 2.390(d)(1)

[s5]

[redacted]

SECURITY SENSITIVE

Figure 6.2.3-5 Auxiliary Building Isolation Barrier

[e5]

Security Information Withheld under 10CFR 2.390(d)(1)

[s5]

[redacted]

SECURITY SENSITIVE

Figure 6.2.3-6 Auxiliary Building Isolation Barrier

[e5]

Security Information Withheld under 10CFR 2.390(d)(1)

[s5]

[redacted]

SECURITY SENSITIVE

Figure 6.2.3-7 Auxiliary Building Isolation Barrier

[e5]

[s5]

[redacted]

SECURITY SENSITIVE

Figure 6.2.3-8 Auxiliary Building Isolation Barrier

[e5]

Security Information Withheld under 10CFR 2.390(d)(1)

[s5]

[redacted]

SECURITY SENSITIVE

Figure 6.2.3-9 Auxiliary Building Isolation Barrier

[e5]

Security Information Withheld under 10CFR 2.390(d)(1)

Security Information Withheld under 10CFR 2.390(d)(1)

[s5]

[redacted]

SECURITY SENSITIVE

Figure 6.2.3-10 Auxiliary Building Isolation Barrier

[e5]

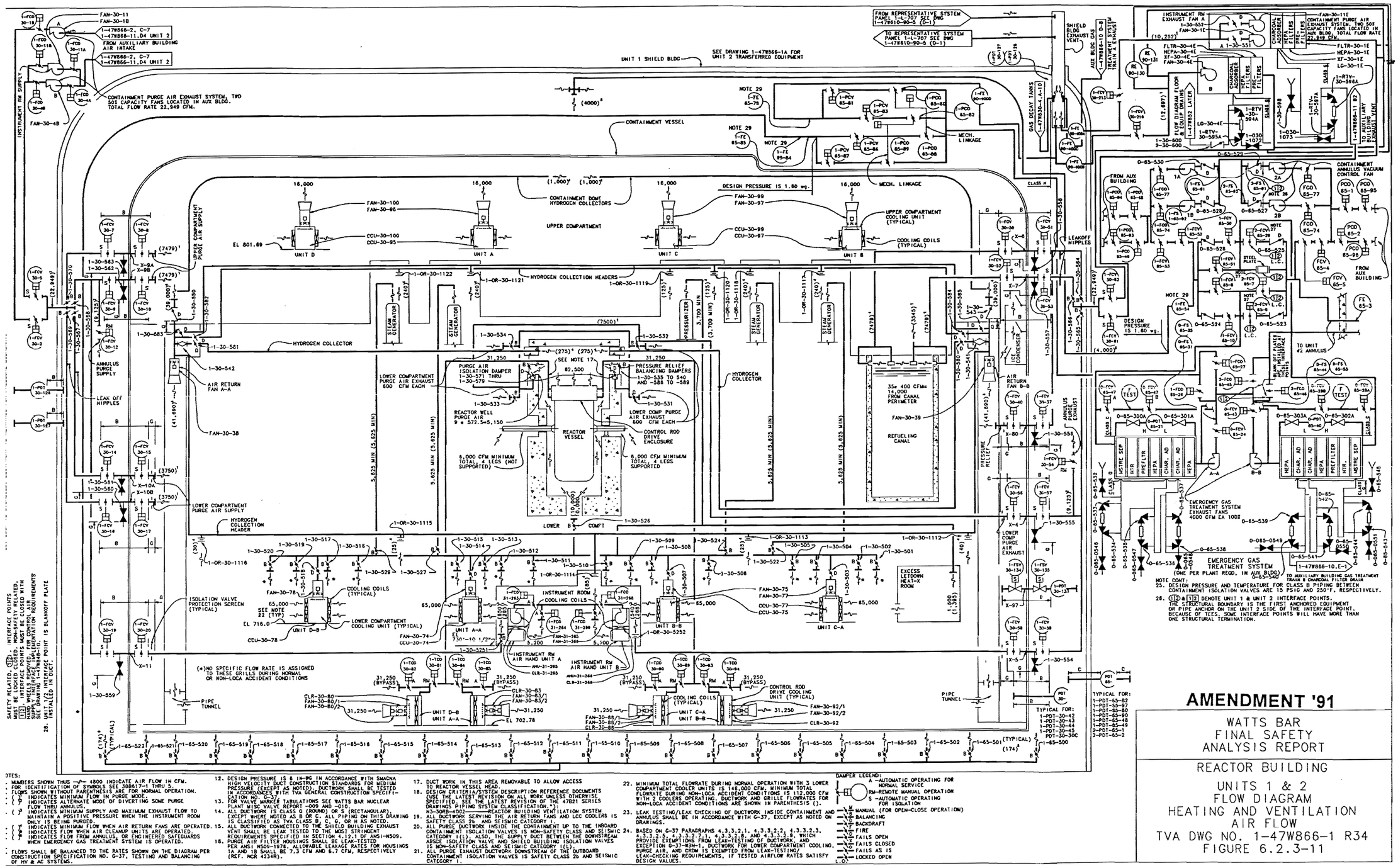

Figure 6.2.3-11 Reactor Building - Units 1 & 2 Flow Diagram - Heating and Ventilation Air Flow

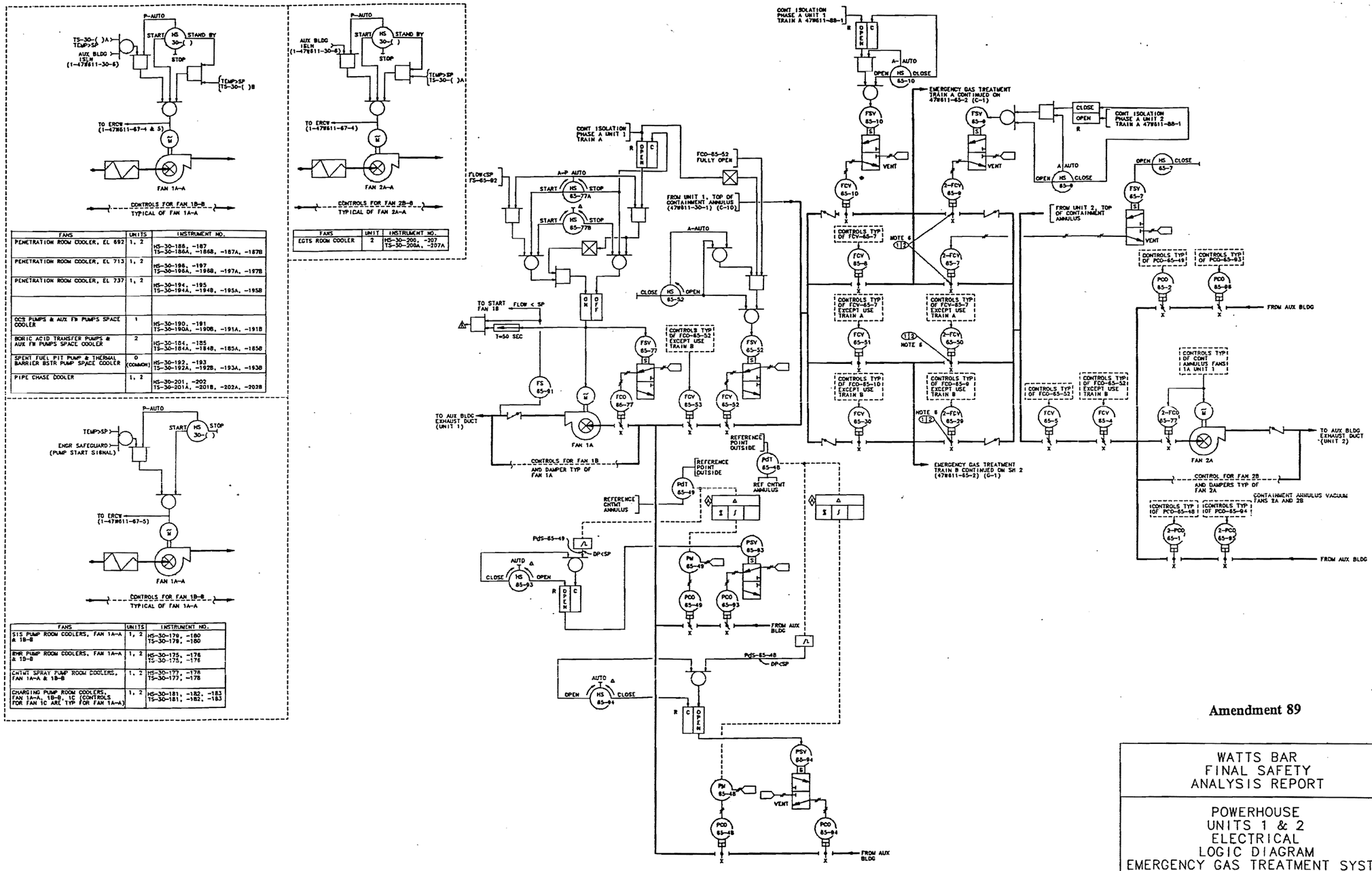

FANS	UNITS	INSTRUMENT NO.
PENETRATION ROOM COOLER, EL 692	1, 2	HS-30-188, -187 TS-30-188A, -188B, -187A, -187B
PENETRATION ROOM COOLER, EL 713	1, 2	HS-30-196, -197 TS-30-196A, -196B, -197A, -197B
PENETRATION ROOM COOLER, EL 737	1, 2	HS-30-194, -195 TS-30-194A, -194B, -195A, -195B
CCS PUMPS & AUX FW PUMPS SPACE COOLER	1	HS-30-190, -191 TS-30-190A, -190B, -191A, -191B
BORIC ACID TRANSFER PUMPS & AUX FW PUMPS SPACE COOLER	2	HS-30-184, -185 TS-30-184A, -184B, -185A, -185B
SPENT FUEL PIT PUMP & THERMAL BARRIER BSTR PUMP SPACE COOLER	0 (COMMON)	HS-30-192, -193 TS-30-192A, -192B, -193A, -193B
PIPE CHASE COOLER	1, 2	HS-30-201, -202 TS-30-201A, -201B, -202A, -202B

FANS	UNIT	INSTRUMENT NO.
EGTS ROOM COOLER	2	HS-30-206, -207 TS-30-206A, -207A

FANS	UNITS	INSTRUMENT NO.
SIS PUMP ROOM COOLERS, FAN 1A-A & 1B-B	1, 2	HS-30-179, -180 TS-30-179, -180
RHR PUMP ROOM COOLERS, FAN 1A-A & 1B-B	1, 2	HS-30-175, -176 TS-30-175, -176
CNTMT SPRAY PUMP ROOM COOLERS, FAN 1A-A & 1B-B	1, 2	HS-30-177, -178 TS-30-177, -178
CHARGING PUMP ROOM COOLERS, FAN 1A-A, 1B-B, 1C (CONTROLS FOR FAN 1C ARE TYP FOR FAN 1A-A)	1, 2	HS-30-181, -182, -183 TS-30-181, -182, -183

Figure 6.2.3-12 Powerhouse Units 1 & 2 Electrical Logic Diagram - Emergency Gas Treatment System

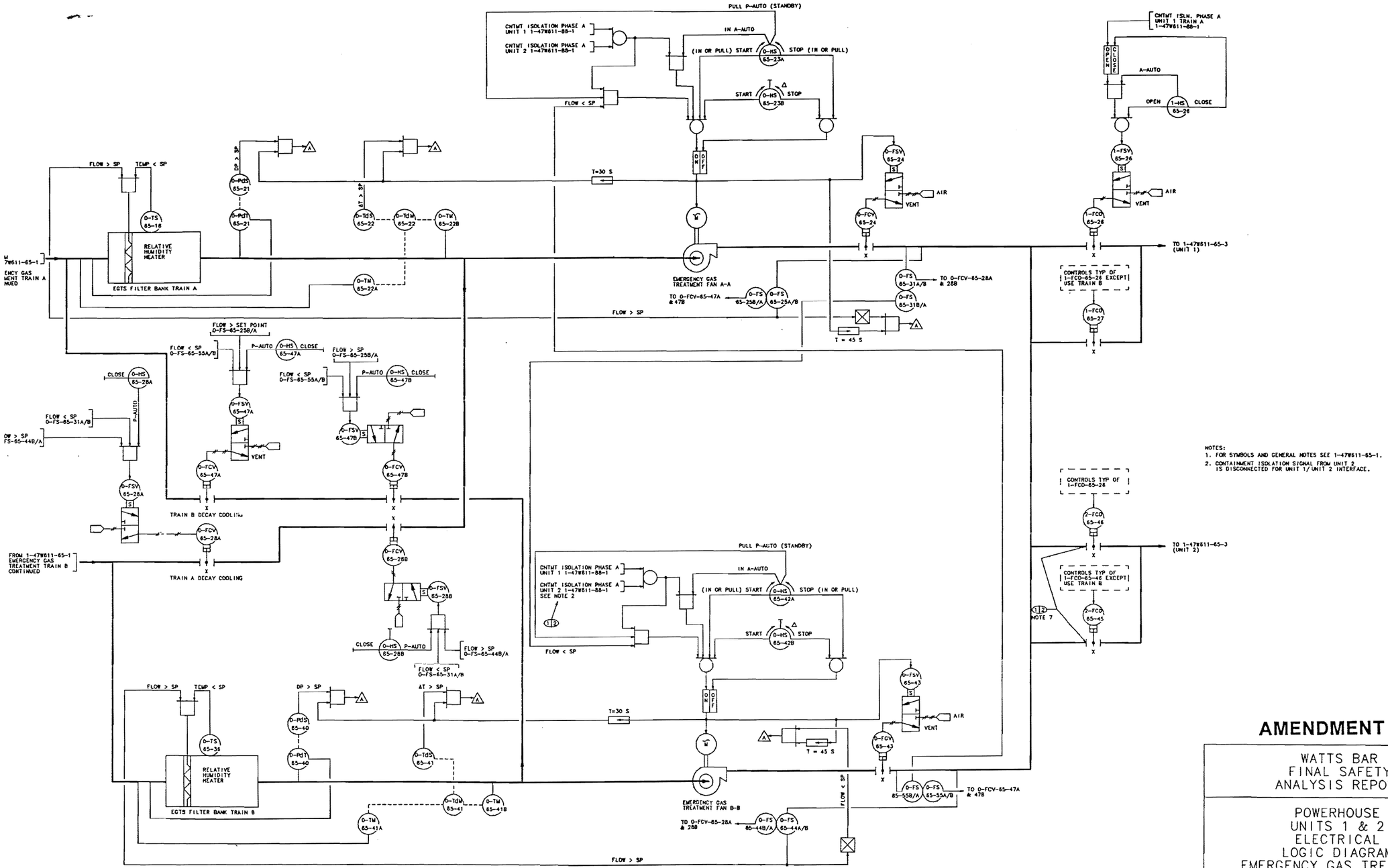

NOTES:
1. FOR SYMBOLS AND GENERAL NOTES SEE 1-47W611-65-1.
2. CONTAINMENT ISOLATION SIGNAL FROM UNIT 2 IS DISCONNECTED FOR UNIT 1/UNIT 2 INTERFACE.

AMENDMENT '91

WATTS BAR
FINAL SAFETY
ANALYSIS REPORT

POWERHOUSE
UNITS 1 & 2
ELECTRICAL
LOGIC DIAGRAM
EMERGENCY GAS TREATMENT
TVA DWG NO. 1-47W611-65-2 R4
FIGURE 6.2.3-13

Figure 6.2.3-13 Powerhouse Units 1 & 2 Electrical Logic Diagram - Emergency Gas Treatment

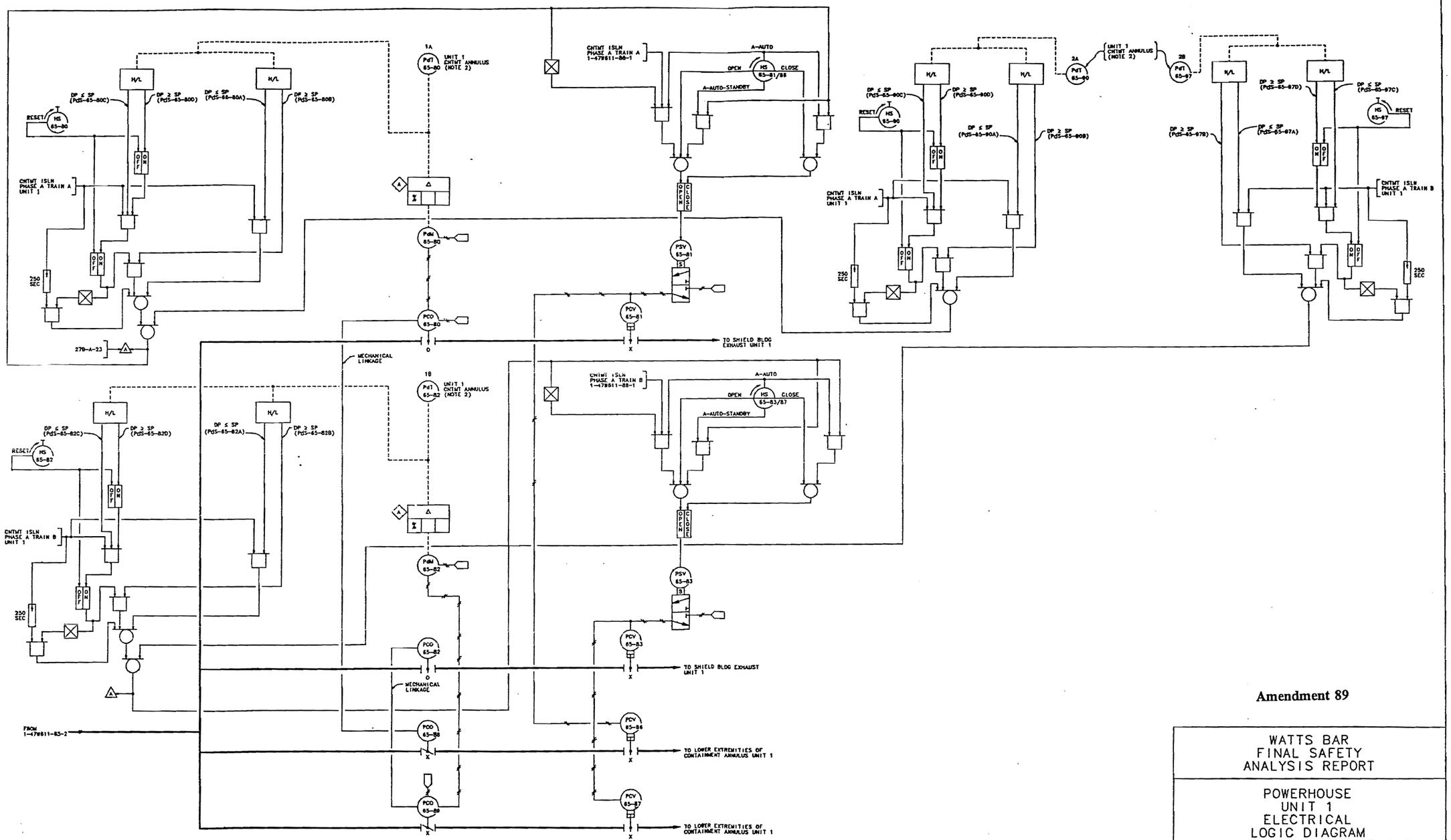

Figure 6.2.3-14 Powerhouse Unit 1 Electrical Logic Diagram -Emergency Gas Treatment

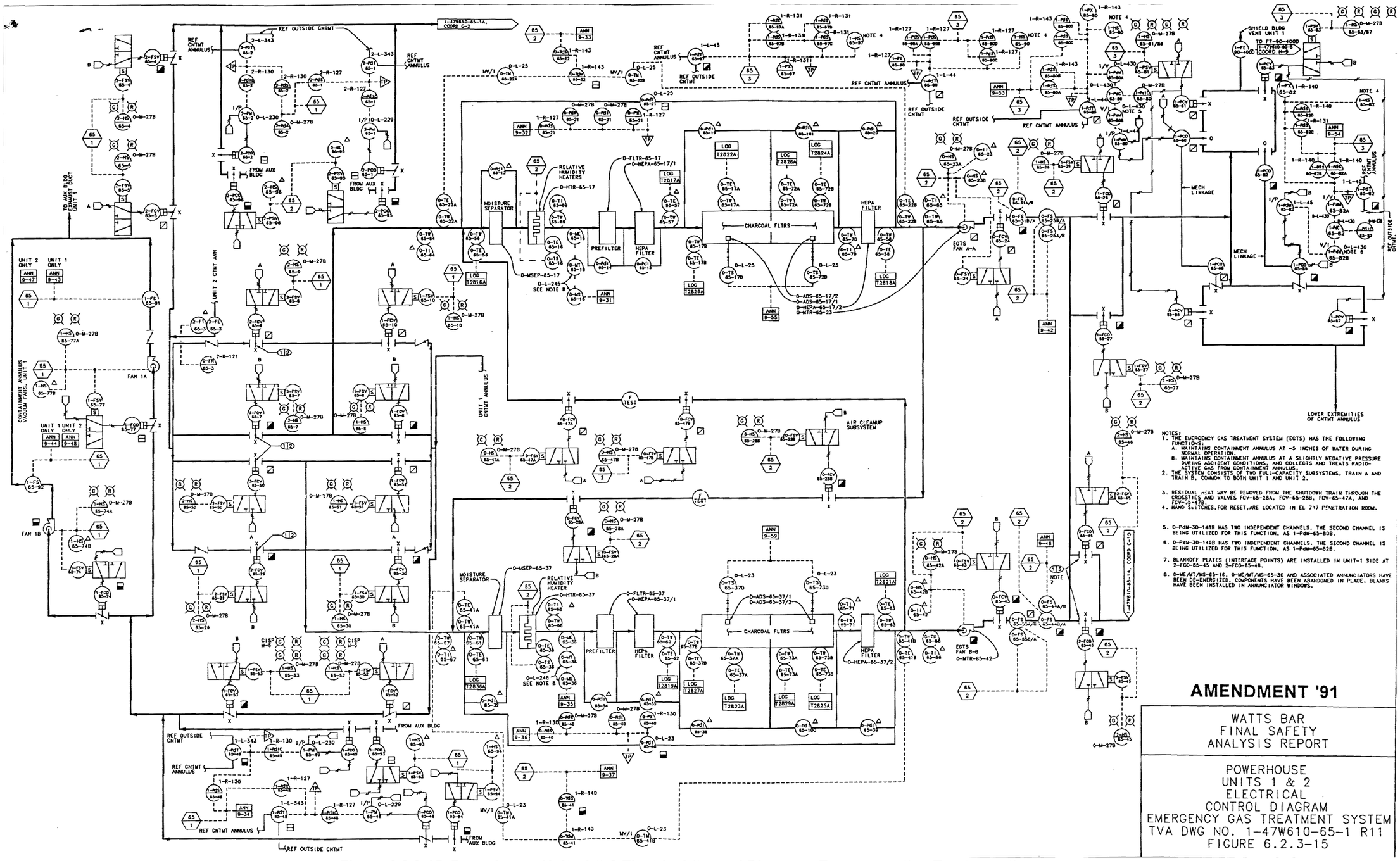

Figure 6.2.3-15 Powerhouse Units 1 & 2 Electrical Control Diagram - Emergency Gas Treatment System

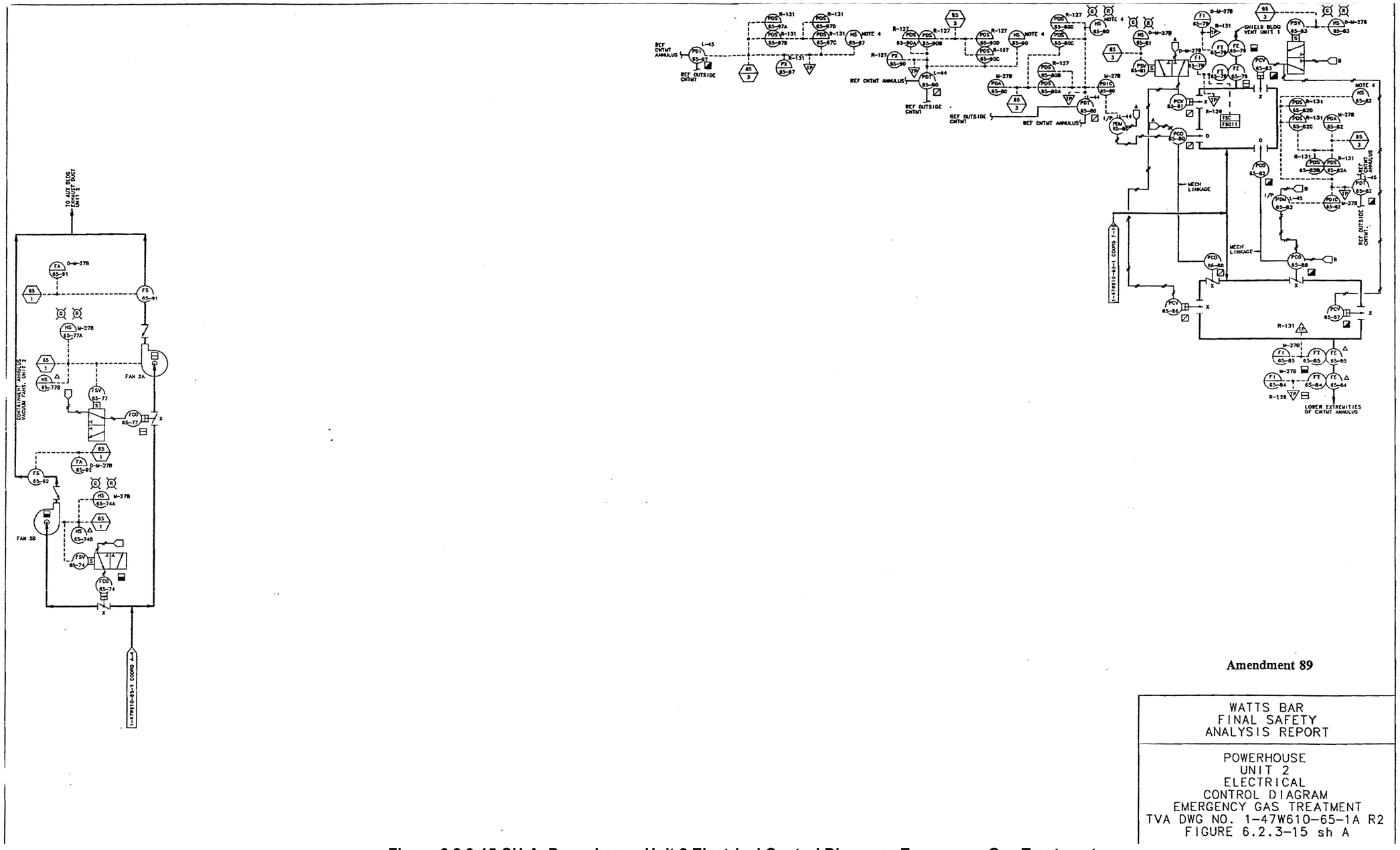

Figure 6.2.3-15-SH-A Powerhouse Unit 2 Electrical Control Diagram - Emergency Gas Treatment

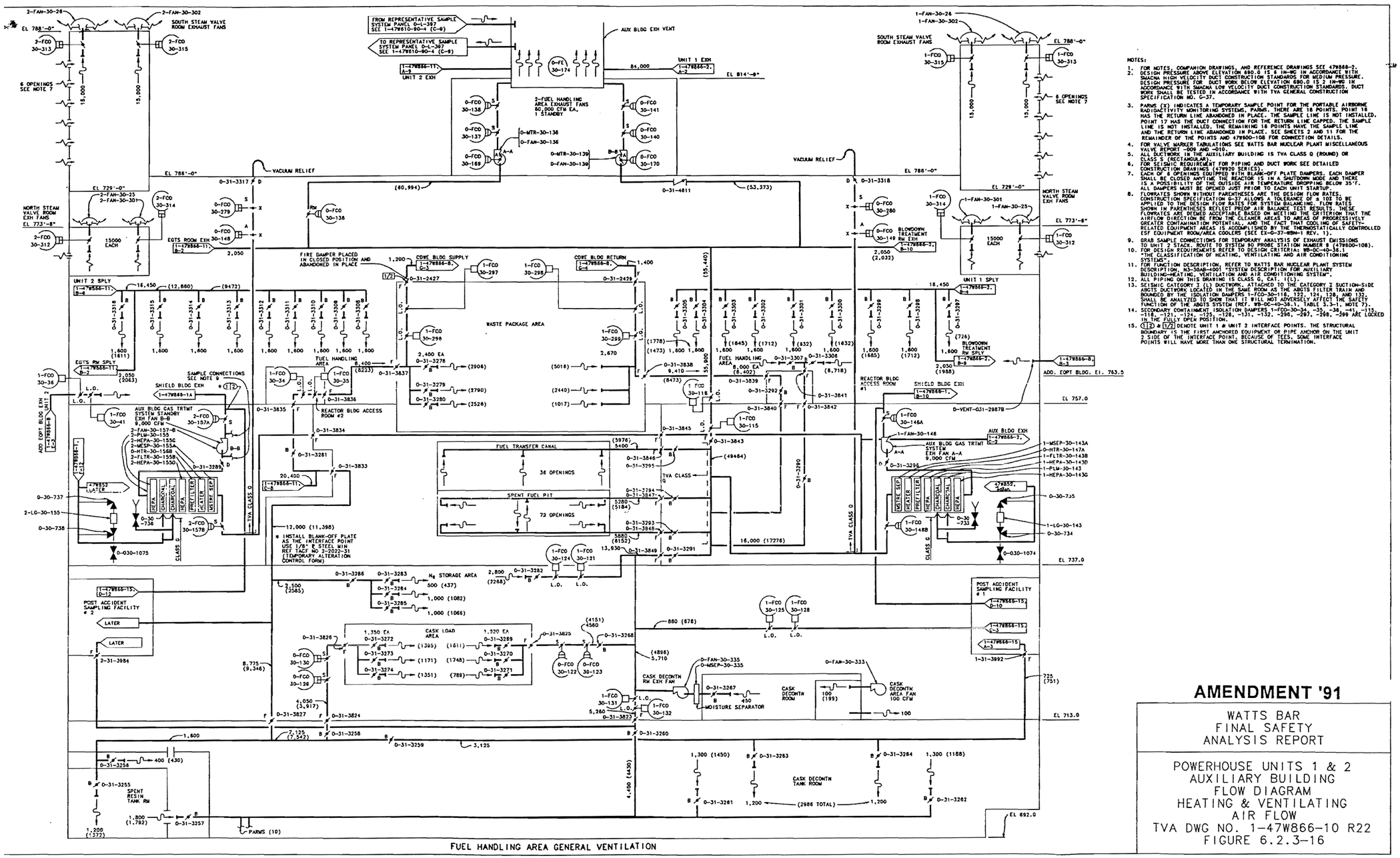

Figure 6.2.3-16 Powerhouse Units 1 & 2 Auxiliary Building -Flow Diagram -Heating &Ventilating Air Flow

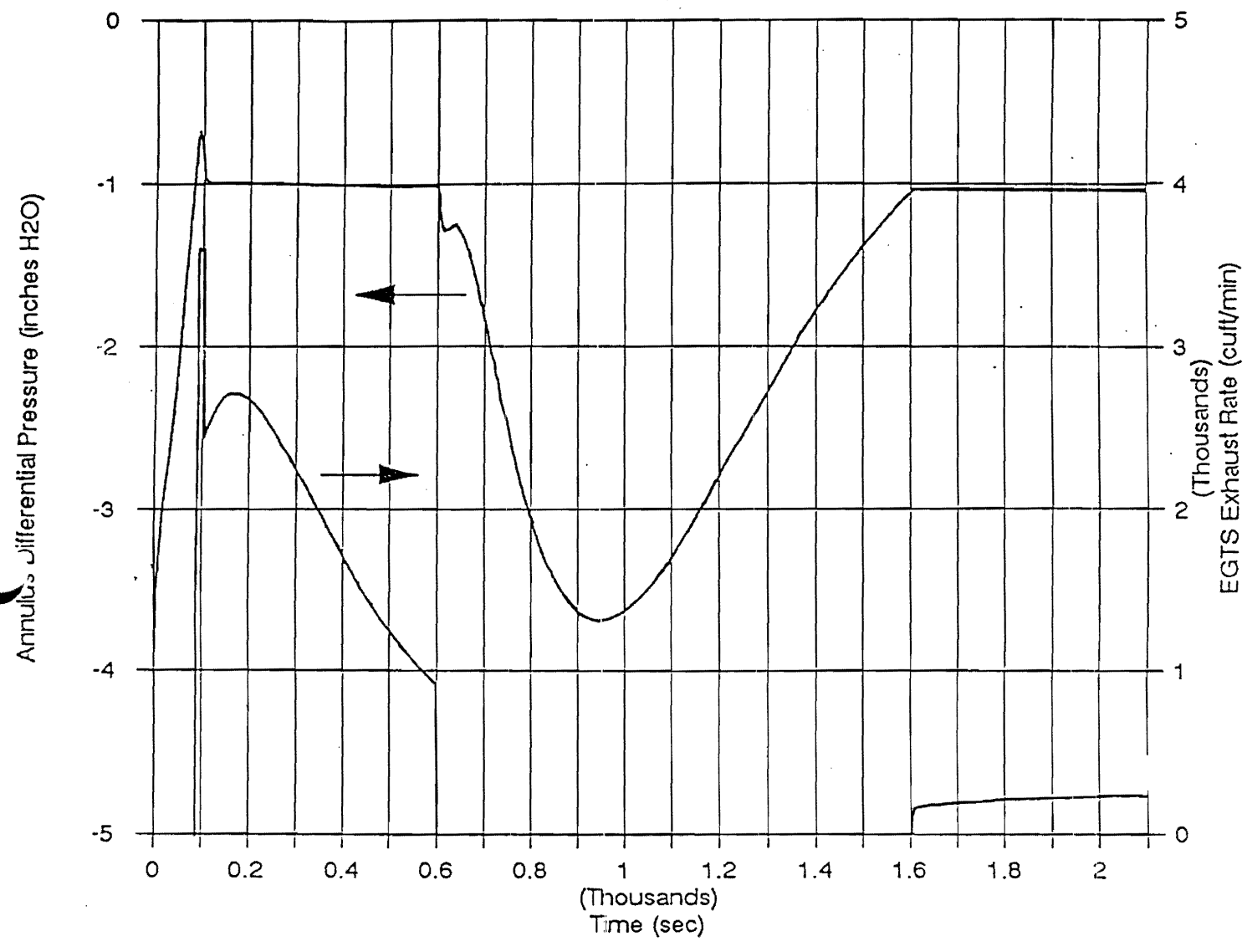

AMENDMENT 85

Figure 6.2.3-17 Post-Accident Annulus Pressure and Reactor Unit Vent Flow Rate Transients

Security Information Withheld under 10CFR 2.390(d)(1)

[s5]

[redacted]

SECURITY SENSITIVE

Figure 6.2.3-18 Reactor Building Units 1 & 2 Mechanical Heating and Ventilating

[e5]

Security Information Withheld under 10CFR 2.390(d)(1)

[s5]

[redacted]

SECURITY SENSITIVE

Figure 6.2.3-19 Reactor Building Units 1 & 2 Mechanical Heating and Ventilating

[e5]

6.2.4 Containment Isolation Systems

The containment isolation systems provide the means of isolating fluid systems that pass through containment penetrations so as to confine to the containment any radioactivity that may be released in the containment following a design basis event. The containment isolation systems are required to function following any design basis event that initiates a Phase A or Phase B containment isolation signal or releases radioactive materials into containment to isolate non-safety-related fluid systems penetrating the containment. The Watts Bar Nuclear Plant does not have a particular system for containment isolation, but isolation design is achieved by applying common criteria to penetrations in many different fluid systems and by using ESF signals to actuate appropriate valves.

6.2.4.1 Design Bases

The main function of the containment isolation system is to provide containment integrity when needed. Containment integrity is defined to exist when:

(1) The nonautomatic containment isolation valves and blind flanges are closed as required.

(2) The containment equipment hatch is properly closed.

(3) At least one door in each containment personnel air lock is properly closed.

(4) All automatic containment isolation valves are operable or are deactivated in the closed position or at least one valve in each line having an inoperable valve is closed.

(5) All requirements of the Technical Specification with regard to containment leakage and test frequency are satisfied.

Containment integrity is required if there is fuel in the reactor which has been used for power operation, except when the reactor is in the cold shutdown condition with the reactor vessel head installed, or when the reactor is in the refueling shutdown condition with the reactor vessel head removed. Containment isolation is not essential for design basis events, such as HELBs, outside containment which do not release radioactive materials into containment. The failure of containment isolation valves for such an event would not result in the release of radioactive fluids from inside containment.

In general, the containment isolation system is designed to the requirements of General Design Criteria 54, 55, 56, and 57 of 10 CFR 50, Appendix A. The following are alternate containment isolation provisions for certain classes of lines:

(1) Fluid instrument lines penetrating the containment are designed to meet the referenced General Design Criteria except for the pressure sensor and reactor vessel level instrumentation system lines. Instrument lines which penetrate containment are listed in Table 6.2.4-4.

(2) Remote-manual valves are used for isolation provisions on certain lines associated with engineered safety features (such as the ECCS) instead of automatic isolation valves.

(3) A closed system outside the containment is acceptable as one of the two isolation barriers if designed to the following criteria:

(a) Does not communicate with the outside environment

(b) Meets Safety Class 2 design requirements

(c) Withstands the internal temperatures and pressures which occur as a result of the containment design basis events

(d) Withstands loss-of-coolant accident transients and environment

(e) Meets Seismic Category I design requirements

(f) Protected against missiles, pipe whip, and jet impingement.

(4) The isolation function of an engineered safety feature or system required to test an engineered safety feature requires one barrier to remain functional after the occurrence of a single active failure. Normally, this is accomplished by providing two isolation valves in series. If it can be shown that a single active failure can be accommodated with only one valve in the line and that fluid system reliability is enhanced by having one valve rather than two valves in series, then one valve and a closed system both located outside of the containment are acceptable. The single valve and piping between the containment and the valve are enclosed in a protective leaktight housing to prevent leakage to the atmosphere in the event of external leakage.

(5) Relief valves may be used as isolation valves in the backflow direction.

The criteria for the number and location of containment isolation valves in each fluid system depend on the valves functions and whether they are open or closed to the containment atmosphere or reactor coolant system. Four isolation classes of fluid system penetrations are defined as follows:

(1) Isolation Class I - Fluid lines which are open to the atmosphere outside the containment and are connected to the reactor coolant system or are open to the containment atmosphere. Each isolation Class I system has a minimum of two isolation valves in series. Where system design permits, one valve is located inside and one valve is located outside containment.

(2) Isolation Class II - Fluid lines which are connected to a closed system outside the containment and are connected to the reactor coolant system or are open to the containment atmosphere. Also included in isolation Class II are fluid lines which are open to the atmosphere outside the containment and are

separated from the reactor coolant system and the containment atmosphere by a closed system inside the containment. Each isolation Class II system has, as a minimum, one isolation valve.

(3) Isolation Class III - Fluid lines which are connected to a closed system both inside and outside the containment. Isolation Class III systems have, as a minimum, one isolation valve.

(4) Isolation Class IV - Fluid lines which must remain in service subsequent to a design basis event, such as lines serving ESF systems. Isolation valves on these lines are not automatically closed by the containment isolation signal. Each isolation Class IV system has, as a minimum, one isolation valve (remote-manual operation).

The following design requirements for containment isolation barriers apply:

(1) The design pressure of all piping and connected equipment comprising the isolation boundary is equal to or greater than the design pressure of the containment.

(2) All valves and equipment which are considered to be isolation barriers and designed in accordance with Seismic Category I criteria shall be protected against missiles and jet impingement, both inside and outside the containment.

(3) All valves and equipment which are considered to be isolation barriers are designed, as a minimum, to ASME Section III Class 2 requirements except as noted in Item 1 of Section 6.2.4.2.1.

(4) A system is closed inside the containment if it meets all of the following:

(a) It does not communicate with either the reactor coolant system or the reactor containment atmosphere.

(b) It will withstand external pressure and temperature equal to containment design pressure and temperature.

(c) It will withstand accident temperature, pressure, and fluid velocity transients, and the resulting environment, including internal thermal expansion.

(d) It is protected against missiles, pipe whip, and jet impingement.

(5) A check valve inside the containment on the incoming line is considered an automatic isolation valve.

(6) A pressure relief valve that relieves toward the inside of the containment is considered an automatic isolation valve.

(7) A locked closed valve is considered an automatic isolation valve.

(8) To qualify as an automatic isolation valve, an air-operated valve must fail closed on loss of air, power, etc.

(9) All valves used for containment isolation will be capable of tight shutoff against gas leakage at containment design pressure.

The design bases for the containment isolation system include provision for the following:

(1) A double barrier at the containment penetration in those fluid systems that are not required to function following a design basis event.

(2) Automatic, fast, efficient closure of those valves required to close for containment integrity following a design bases event to minimize release of any radioactive material.

(3) A means of leak testing barriers in fluid systems that serve as containment isolation.

(4) The capability to periodically test the operability of containment isolation valves.

6.2.4.2 System Design

The containment isolation system meets the design bases presented in Section 6.2.4.1 with the exception of those cases which are discussed in detail in Section 6.2.4.3.

Containment isolation can be initiated by either Phase A or Phase B signals.

A Phase A signal is generated by either of the following:

(1) Manual - either of two momentary controls

(2) A safety injection signal, generated by one or more of the following:

(a) Low steamline pressure in any steamline

(b) Low pressurizer pressure

(c) High containment pressure

(d) Manual - either of two momentary controls.

A Phase B signal is generated by either of the following:

(1) Manual - two sets (two switches per set) - actuation of both switches is necessary in either set for spray initiation

(2) High-high containment pressure.

Containment isolation Phase A always exists if containment isolation Phase B exists, when the Phase B signal is initiated by automatic instrumentation. Phase A containment isolation does not occur when the Phase B signal is initiated manually. The instrumentation circuits that generate both Phase A and Phase B signals are described in Chapter 7.

The containment isolation system provides for automatic, fast, and efficient closure of those valves required to close for containment integrity following a design basis event to minimize the release of any radioactive material. Closure times for isolation valves are included in Table 6.2.4-1.

6.2.4.2.1 Design Requirements

Containment isolation barrier design includes the following requirements:

(1) As a minimum, containment barriers are designed to ASME Section III Class 2 requirements. This design meets the requirements of Regulatory Guide 1.26 for the containment isolation systems, except that the four auxiliary feedwater lines incorporate safety-grade Quality Group C (ASME Section III, Class 3) valves outside containment for isolation. This has been documented in NUREG 0847 as acceptable to the NRC. All valves and equipment which are considered to be isolation barriers are designed to Seismic Category I requirements which is the intent of Regulatory Guide 1.29.

(2) All isolation barriers either inside or outside of the containment are protected against missiles, pipe whip, and jet impingement during a LOCA.

(3) All power operated isolation valves are tested for operability by the manufacturer and preoperationally after installation. Those automatic isolation valves with air or motor operators that do not restrict normal plant operation are periodically tested to ensure operability.

Additional design information is included in Table 6.2.4-1.

6.2.4.2.2 Containment Isolation Operation

A containment isolation signal initiates closing of automatic isolation valves in those lines which must be isolated immediately following a design basis event. The containment isolation valves will close within the time specified in Table 6.2.4-1. However, on loss of ac power, the diesel will have to be started prior to closure. It is estimated that the time required to start the diesel is 10 seconds. The logic diagram for this system is shown in Figure 6.2.4-21.

Check valves are used under conditions where differential pressure will close the valves to maintain containment integrity. Lines which, for safety reasons, must remain in service subsequent to a design basis event are provided with at least one isolation valve.

Each automatic isolation valve required to operate subsequent to an accident is additionally provided with a manual control switch for operation. The position of these automatic isolation valves is indicated by status lights in the main control room. Primary and secondary modes of valve actuation are shown in Table 6.2.4-1.

Redundant isolation barriers are used to prevent any single failure from causing an open path from the containment. If two power operated valves are used in series in a line for isolation purposes, one valve is supplied with one train of control and power and the other valve is supplied by the other train. Redundancy in power, signals, and barriers is provided to assume isolation.

Provisions for detecting leakage from remote manually controlled systems (such an the ECCS) include the use of pressure and flow meters, and inspection of the systems during normal plant operation. Details for leak detection are given in the appropriate system descriptions. Piping systems penetrating the containment have been provided with test vents and test connections or have other provisions to allow periodic leak testing (see Section 6.2.6).

The manufacturers of isolation system components perform tests to demonstrate the ability of mechanical and electrical components located inside the containment to perform as required in the containment environment following the design basis accident. Accident conditions which are considered in the design of isolation components are pressure, humidity, radiation, and temperature. Section 3.11 gives information concerning the environmental conditions used in the design of the containment isolation system including more detail on qualification testing of ESF components.

The description and design requirements for the instrumentation and control portions of the containment isolation system are discussed in Chapter 7.

6.2.4.2.3 Penetration Design

The penetrations are classified into 24 different types. These are shown in Figures 6.2.4-1 through 6.2.4-17E.

The locations of these penetrations through the steel containment and the Shield Building are shown in Figures 6.2.4-18 and 6.2.4-19, respectively. The penetrations are tabulated in Table 6.2.4-1. The different types of penetrations are discussed below and the various possible leakage paths, as tabulated in Table 6.2.4-1 and shown in Figure 6.2.4-20, are also described below.

Penetration Types I and II - Main Steam and Feedwater

The main steam and feedwater line penetrations, shown in Figures 6.2.4-1 and 6.2.4-2, are the "hot" type in which the penetrations must accommodate thermal movement. Each "hot" process line where it passes through the containment penetration is enclosed in a guard pipe that is attached to the process line through a multiple fluid fitting. The guard pipe protects the bellows should the process line fail within the annulus between the containment vessel and the Shield Building, thereby precluding the discharge of fluids into the annulus. The inner end of the guard pipe is

fitted with an impingement ring which protects the bellows from jets originating from pipe breaks inside containment. In addition, the guard pipe for this type of penetration extends through and is supported by the crane wall. This avoids transmitting, loads to the containment vessel. Also, in the event of a pipe rupture it discharges fluid into the reactor compartment rather than smaller rooms outside the crane wall, thus preventing, overpressurization of these smaller rooms.

For each of these penetrations the penetration sleeve is welded to the containment vessel. The process line which passes through the penetration is allowed to move both axially and laterally. A two-ply bellows expansion joint is provided to accommodate any movement between the containment vessel and the Shield Building, under any conditions. The bellows is designed to withstand containment design pressure. When an embedded anchor is not utilized, a low-pressure flexible closure will seal the process line to the sleeve in the Shield Building, which will not impose significant stress on the penetration.

The flexible closure described above is located outdoors and serves to contain any leakage from the fluid head so that the leakage is routed back to the annulus, and to seal the annulus from the outdoors.

Guides and anchors limit movement of pipes such that design limits on the containment penetration and bellows are not exceeded during all conditions of plant operation, test, or postulated accidents.

Penetration Type III - Residual Heat Removal Pump Supply and Return

The RHR pump supply and return penetrations, shown in Figure 6.2.4-3, are also the "hot" type. For these penetrations, the guard pipe does not penetrate the crane wall. This type of penetration is anchored at the Shield Building wall in addition to being supported from the internal concrete structure to minimize loads transmitted to the steel containment vessel.

The Shield Building sleeves have embedded anchors and the fluid heads are in the Auxiliary Building. There is no need for low-pressure flexible closures as used in penetrations types I and II, since any leakage from the fluid head will be processed by the auxiliary building gas treatment system.

Penetration Types IV and V

Types IV and V penetrations are also thermally "hot" with insulation and bellows, as shown in Figure 6.2.4-4. Any leakage through the fluid heads or through the bellow will be into the annulus and thereby processed by the emergency gas treatment system. The two types differ by only the weld ends.

Penetration Types VI, VII, and VIII

Penetrations types VI through X and XIII through XVIII are "cold" penetrations.

For "cold" piping penetrations, a low-pressure flexible closure will seal the cold pipe to the sleeve penetrating the Shield Building. The piping configuration and supports on

either side of the penetration will be designed to preclude overstressing the containment vessel at the penetration under any conditions, including postulated accidents.

Relatively small thermal movement or stress is expected for the "cold" penetrations. The clearance space provided for the pipe going through the Shield Building wall is computed by the summation of the relative movements of the pipe and the Shield Building for all design conditions. Ample clearance space is provided so that the pipe will not be in contact with the Shield Building sleeve under any condition.

Penetration types VI and VII have provisions for dissimilar metal welding. The two types differ in their weld ends only. Penetration types VI and VII are illustrated in Figure 6.2.4-5. The fluid heads of both types are located in the annulus.

Penetration type VIII is similar to that of penetrations types VI and VII, except that there is no dissimilar metal weld. Penetration type VIII is illustrated in Figure 6.2.4-6.

Penetration Type IX Containment Spray and RHR Spray Headers

There is no difference between penetration types VIII and IX except that penetration type IX is located at the dome. Penetration type IX is illustrated in Figure 6.2.4-7. The flued heads are located in the annulus.

Penetration Type X - Multiple Line Sleeves

Type X penetrations are primarily for instrumentation lines such as sampling and monitor lines. Typical multiple line sleeves are shown in Figure 6.2.4-8.

Penetration Types XI and XII - Emergency Sump

During long-term post-accident conditions, containment sump water is recirculated through the RHR system and the containment spray system. The water collects on the floor of the containment and flows to the emergency sump. The water flows out of the containment through type III penetrations (two per unit) shown in Figure 6.2.4-9. Each line contains an isolation valve. The valves are enclosed in a valve compartment (two per plant unit). The valve compartments are designed for the same conditions as the containment except for leaktightness. The penetration between the valve compartments and the Auxiliary Building is a type XI penetration (two per plant unit) illustrated in Figure 6.2.4-10.

The type XII penetration has a flued head located in the containment sump. The outer sleeve (guard pipe) of the flued head is welded directly to the containment liner which is completely embedded in the concrete.

The type XI penetration has the flued head located in the Auxiliary Building. The penetration is insulated because of the hot sump water which would pass through it in the event of a design bases event.

Penetration Type XIII - Ventilation

Heating and ventilation ducts utilize penetration type XIII, as shown in Figure 6.2.4-11. Process lines are welded directly to these penetrations. Additional information on ventilation duct penetrations is given in Section 6.2.4.3.1 on possible leakage paths.

Penetration Type XIV - Equipment Hatch

An equipment hatch fabricated from welded steel and furnished with a double-gasketed flange and bolted dished door is provided. A test connection to the space between the gaskets is provided to pressurize the space for leak rate testing, as shown in Figure 6.2.4-12.

Penetration Type XV - Personnel Access

Two personnel air locks are provided. Each personnel air lock, as shown in Figure 6.2.4-13, is a double door welded steel assembly. Quick-acting type equalizing valves are provided to equalize pressure in the air lock when personnel enter or leave the containment vessel. The doors are sealed with double gaskets. A test connection to the space between the gaskets is provided to pressurize the space for leak rate testing. The emergency air supply connection to the space between the double doors serves as a test connection to pressurize this space for leak rate testing. A special hold-down device is provided to secure the inner door in a sealed position during leak rate testing of the space between the doors.

The two doors in each personnel air lock are interlocked to prevent both being opened simultaneously and to ensure that one door and its equalizing valve are completely closed before the opposite door can be opened. Remote indicating lights and annunciators located in the main control room indicate the door is in operational status. Provision is made to permit bypassing the door interlocking, system with a special tool to allow doors to be left, open during plant cold shutdown. Each lock door hinge is designed to be capable of adjustment to assure proper seating. A lighting and communication system capable of being operated from an external emergency supply is provided in the lock interior.

Penetration Type XVI - Fuel Transfer Tube

A 20-inch OD fuel transfer tube penetration is provided for fuel movement between the refueling canal in the containment and the spent fuel pool. The penetration consists of 20-in stainless steel pipe installed inside a 24-inch carbon steel pipe, as shown on Figure 6.2.4-14. The inner pipe acts as the transfer tube and is fitted with a double gasketed blind flange in the refueling canal and a standard gate valve in the spent fuel pool. The inner pipe is welded to the containment penetration sleeve. Bellows expansion joints are provided on the pipes to compensate for any differential movement between the two pipes or other structures.

Penetration Type XVII - Thimble Renewal

Incore instrumentation thimble renewal requires penetrations in both the steel containment and the Shield Building at the same elevation and azimuth. These are separate penetrations and are not connected in the annulus. The containment

penetration is illustrated in Figure 6.2.4-15. A similar seal is used on the Shield Building. Double O-ring gaskets and leak rate test connectors are provided for both the containment penetration and the Shield Building penetration.

Penetration Type - XVIII - Ice Blowing

The ice blowing line penetration has a blind flange with an O-ring gasket inside and outside of the containment as shown in Figure 6.2.4-16. Sealing between the Auxiliary Building and the annulus is provided by a blind flange fitted with a gasket.

Penetration Type XIX - Electrical

The electrical penetration assemblies provide a means for the continuity of power, control, and signal circuits through the primary containment structure.

Each assembly consists of redundant pressure barriers through which the electrical conductors are passed, as shown in Figure 6.2.4-17.

Each penetration assembly is sized such that it may be inserted into and be compatible with the penetration nozzles which are furnished as a part of the containment structure. Unless otherwise specified, the assembly is designed to be inserted from the outboard-end of the primary containment nozzle.

The criteria and requirements for the design, construction, and installation of the modular type electrical penetrations conform to IEEE Standard 317-1976, "IEEE Standard for Electrical Penetration Assemblies in Containment Structures for Nuclear Fueled Power Generating Stations."

Penetration Type XX

The feedwater bypass line penetrations, shown in Figure 6.2.4-17A are the 'hot' type in which the penetrations must accommodate thermal movement. Each 'hot' process line where it passes through the containment penetration is enclosed in a guard pipe that is attached to the process line through a multiple fluid fitting. The guard pipe protects the bellows should the process line fail within the annulus between the containment vessel, thereby precluding the discharge of fluids into the annulus. The inner end of the guard pipe is fitted with an impingement ring which protects the bellows from jets originating from pipe breaks inside containment. In addition, the guard-pipe for this type of penetration extends through and is supported by the crane wall. This avoids transmitting loads to the containment vessel. Also, in the event of a pipe rupture it discharges fluid into the reactor compartment rather than smaller rooms outside the crane wall, thus preventing overpressurization of these smaller rooms.

For each of these penetrations, the penetration sleeve is welded to the containment vessel. The process line which passes through the penetration is allowed to move both axially and laterally. A two-ply bellows expansion joint is provided to accommodate any movement between the containment vessel and the Shield Building, under any conditions. The bellows is designed to withstand containment design pressure. When an embedded anchor is not utilized, a low-pressure flexible closure will seal the

process line to the sleeve in the Shield Building, which will not impose significant stress on the penetration.

The flexible closure described above is located outdoors and serves to contain any leakage from the fluid head so that the leakage is routed back to the annulus, and to seal the annulus from the outdoors.

Guides and anchors limit movement of pipes such that design limits on the containment penetration and bellows are not exceeded during all conditions of plant operation, test, or postulated accidents.

Penetration Type XXI

The ERCW lines and several component cooling water lines employ penetration type XXI, as shown in Figure 6.2.4-17B. Process lines are welded directly to these penetrations.

Penetration Type XXII

The type XXII penetration is used for the multiple line nitrogen penetration. This penetration is shown in Figure 6.2.4-17C.

Penetration Type XXIII

This type of penetration is used for the chilled water lines and each penetration contains a single chilled water line. The penetration is illustrated in Figure 6.2.4-17D.

Penetration Type XXIV

Type XXIV penetrations are used for maintenance ports. These penetrations employ bellows as shown in Figure 6.2.4-17E. Any leakage through the flued heads or through the bellows will be into the annulus and thereby processed by the emergency gas treatment system.

The following codes, standards, and guides were applied in the design of the containment isolation system.

(1) 10 CFR Part 50

(2) ASME Boiler and Pressure Vessel Code Section III

(3) Regulatory Guide 1.26

(4) Regulatory Guide 1.29

(5) ANSI N18.2-1973

(6) IEEE Standard 317-1976

6.2.4.3 Design Evaluation

The containment isolation systems are designed to present a double barrier to any flow path from the inside to the outside of the containment using the double-barrier approach to meet the single-failure criterion.

When permitted by fluid system design, diverse modes of actuation are used for automatic isolation valves. In addition to diverse modes of operation, channel separation is also maintained. This also ensures that the single-failure criterion is met.

Adequate protection is provided for piping, valves, and vessels against dynamic effects and missiles which might result from plant equipment failures, including a LOCA.

Isolation valves inside the containment are located between the crane wall and the inside containment wall. The crane wall serves as the main missile barrier. Other missile barriers are discussed in Section 3.5.

The requirements and intent of NRC General Design Criteria 54, 55, 56, and 57 have been met with four exceptions.

(a) Primary containment monitoring instrument systems shall be designed to maintain the integrity of the containment isolation boundary in the event of a DBE. The instrument systems consist of pressure sensors (e.g., transmitters) located outside containment and associated sense lines that connect to the containment penetration nozzles. The sensors should be located as close as practical to the associated penetration nozzle. Any drain or test line used shall meet the double isolation barrier by use of two normally closed manual valves in series.

The instrument system shall be designed to Seismic Category I requirements and evaluated for effects of possible missiles, pipe whip, and jet impingement. Refer to Section 7.4 for exceptions to requirements concerning the use of remote-manual or automatic isolation valves.

(b.1) The reactor vessel level indication system (RVLIS) is required post accident for continual indication of the water level in the reactor vessel. The capillary sensing lines which transmit pressure from the reactor vessel to instruments in the Auxiliary Building are armored and designed to withstand DBE conditions. Any containment isolation valves installed in the RVLIS capillary lines will jeopardize the performance of the system. For this reason, isolation of these capillary lines is accomplished by a sealed sensor located inside containment and an isolator located outside containment. These devices utilize a type of bellows which transmits pressure while preventing mixing of the fluids on either side of the isolation devices. The capillary line is armored 3/16-inch O.D. stainless steel tubing and is filled with demineralized water and sealed. A postulated shear of this capillary

line on either side of the containment would not allow a leak to develop through the containment boundary.

(b.2) The RCS wide range pressure transmitter (PT-68-70) is required post accident for continual indication of the pressure in the reactor vessel. The capillary sensing lines which transmit pressure from the reactor vessel to instruments in the Auxiliary Building are armored and designed to withstand DBE conditions. Any containment isolation valves installed in the RCS wide range pressure transmitter capillary lines will jeopardize the performance of the system. For this reason, isolation of these capillary lines is accomplished by a sealed sensor located inside containment and an isolator located outside containment. These devices utilize a type of bellows which transmits pressure while preventing mixing of the fluids on either side of the steel tubing and is filled and sealed. A postulated shear of this capillary line on either side of the containment would not allow a leak to develop through the containment boundary.

(c) Containment isolation for each RHR sump line penetration consists of:

(a) A closed system outside containment.

(b) A containment isolation valve outside containment in each of the two lines after the penetrating line branches in the RHR sump valve room. Both of these valves are remotely controlled from the main control room.

An enclosure of the RHR sump lines and isolation valves is provided from the containment out to and including the isolation valves. However, this enclosure is not designed to be leaktight after an accident for the following reasons:

(1) The maximum pressure which will be experienced inside the RHR sump line will only be about 25 psig.

(2) One of the isolation valves, the containment sump valve, is qualified to 600 psig. The other isolation valve, the containment spray valve, is qualified to 200 psig.

(3) This portion of the system only operates post accident and, therefore, only a limited leak passive failure need be postulated (and this would be at the valve). However, based on the above two statements and the fact that deadweight loading (i.e., normal operation) should not exceed the MELB criteria, the over-design should preclude any problem.

Thus, the penetration has such overconservatism in its design that an external leaktight enclosure around the valves is not necessary.

(d) The pressure boundary valve leak rate test line containment isolation valves (63-158, 63-112, 63-111, 63-167, 63-174, 63-21, and 63-121) are remote manually actuated from the main control room and do not receive a containment isolation signal. These valves are open for short periods of time during normal operation for the performance of SIS and RHR system venting. Thus, these valves do not automatically close when the containment isolation or safety injection signal is initiated during the venting of the SIS and RHR system. This exception is acceptable because administrative controls exist in the test document to assure valve closure after testing and containment integrity is not compromised during pump operation (i.e., during testing at accident conditions) since flow is being maintained into containment.

6.2.4.3.1 Possible Leakage Paths

Possible leakage paths from the containment are defined below. The leakage paths are defined on the basis that the annulus pressure is always less than outdoor ambient, the Auxiliary Building, and the containment pressures. Therefore, whenever containment is required, leakage is into the annulus. The possible leakage paths considered do not include containment leakage through the steel plates or through the full penetration welds in the containment vessels. The possible leakage paths also do not include shield building embedments. This is acceptable, as any leakage through any of these paths will be into the annulus and the leakage will be processed by the EGTS.

The more probable sources of containment and Shield Building leakage, such as elastomer seals, bellows, and through lines are considered as possible leak path types. Each penetration that contains elastomer seals or a bellows has at least one leakage path defined in Table 6.2.4-1. All penetrations not open to the annulus are considered as possible paths for through-line containment leakage and have one or more isolation valves. Thus every pipe penetration has at least one type of leak path listed in Table 6.2.4-1. The five different types of possible leakage paths are shown in Figure 6.2.4-20, tabulated in Table 6.2.4-1 and are discussed separately below.

Type A - Leakage Path

Type A leakage is leakage from the Auxiliary Building into the annulus. Type A penetration leakage includes the following:

(1) Equipment hatch Shield Building sleeve leak (see Figure 6.2.4-12).

(2) Annulus access door leak.

(3) Ice blowing line Shield Building blind flange leak (see Figure 6.2.4-16).

(4) Containment purge supply and exhaust isolation valves outside Shield Building leak. The possible leakage is through the valves and the leakoff (see Figure 6.2.3-2) into the annulus.

(5) Shield Building penetration seal leakage.

Type B - Leakage Path

Type B leakage paths are from the containment to the annulus. Type B leakage includes the following:

(1) Equipment hatch double O-ring through-line leak (see Figure 6.2.4-12).

(2) Ice blowing line O-ring and blind flange through line leak (see Figure 6.2.4-16).

(3) Penetration bellows leak.

(4) Containment purge supply and exhaust inboard and outboard valves through line leak. The leakage will pass through the leak off (see Figure 6.2.3-2) into the annulus.

(5) Containment thimble renewal line double O-ring through-line leak (see Figure 6.2.4-15).

Type C - Leakage Path

Type C leakage is leakage from the out-of-doors into the annulus and includes the following:

(1) Shield Building thimble renewal line double O-ring through-line leak.

(2) Main steam and feedwater lines annulus seal leak.

Type D - Leakage Path

Type D leakage path covers the through-line leakage from the containment to the Auxiliary Building (see Table 6.2.4-2). Included in this type of leakage are the lines associated with the safety systems required for post-LOCA operation, such as containment spray, RHR spray, high-head SIS, low-head SIS, SIS pump discharge, charging pump discharge, and containment emergency sump. For "closed" systems inside the Auxiliary Building, the through line leakage will stay within the closed system. The component cooling water system is basically a closed system, except for the vent header at the surge tank. Any through line leakage into the Auxiliary Building through this vent will be processed by the auxiliary building gas treatment system. Radiation monitoring is provided as a signal to initiate the closing of the vent. The nitrogen supply lines to the pressurizer relief tank and to the accumulators are normally closed. The high pressure outside of the isolation valves serves to minimize through line leakage outward. The personnel lock is yet another possible source for through line leakage, but the leakage through the double O-ring (assuming one door open) is small, if any, and will be processed by the auxiliary building gas treatment system.

Type E - Leakage Path

Type E leakage paths are paths from the containment that bypass the annulus and leak directly past a cleanup system. These leakage paths were considered during the design of the Watts Bar Nuclear Plant. The design features utilized at Watts Bar eliminates all type E leakage paths. This is done by the following methods:

(1) Portions of the Auxiliary Building are maintained at a negative pressure relative to the outside atmosphere for the duration of an accident. Section 6.2.3 describes the implementing system and its operation.

(2) Leakoff lines to the secondary containment and a third outboard valve receiving an isolation signal are used in certain lines (such as the containment purge lines) to prevent bypass leakage.

(3) A water seal at greater than peak containment accident pressure is used to prevent bypass leakage in certain lines (such as the safety injection pump discharge). The seals are available for at least 30 days after a design basis event (see Table 6.2.6-2b).

(4) The secondary side of the steam generator is kept at a higher pressure than the primary side soon after the LOCA occurs (see Section 10.4.9). Any leakage between the primary and secondary sides of the steam generator is thus directed inward to the containment.

Table 6.2.4-3 lists potential bypass leakage paths to the atmosphere and the methods chosen to eliminate such leakage.

6.2.4.4 Tests and Inspections

All components of the containment isolation systems were designed, fabricated, and tested under quality assurance requirements in accordance with 10 CFR 50, Appendix B, as further described in Chapter 17. An alternative to visual examination during ASME Section III hydrostatic pressure testing was approved by Reference [1] for Unit 1 penetrations having inaccessible vender welds.

Nondestructive examination was performed on the components of the system in accordance with the applicable codes described in Section 3.2.

Subsequent to initial plant operation, containment isolation systems will be periodically tested under conditions of normal operation to determine that all systems are in constant readiness to perform the desired function.

Automatic isolation valves that receive a containment isolation signal to close, where closure of the valve will not limit or restrict normal plant operation, are periodically functionally tested by the on-line testing capability described in Section 7.3. All other valves are periodically tested for CIS circuit electrical continuity. Other testing information is provided in Section 6.2.6.

REFERENCES

(1) NRC Inspection Report Nos. 50-390/90-04 and 50-391/90-04, dated May 17, 1990.

Table 6.2.4-1 WATTS Bar Nuclear Plant Primary Containment and Shield Building Penetration Isolation System Data Sorted by: Containment Penetration Number

PENETRATION IDENTIF.			-------PRIMARY CONTAINMENT PENETRATION------						------SHIELD BUILDING PENETRATION------					
PRIM CONT	PENETRATING SHIELD BLDG	EQUIPMENT NAME	ELEVATION (FT)	ELEVATION (IN)	AZIMUTH (DEG)	AZIMUTH (MIN)	SLEEVE DIA (IN) (MIN)	PIPE DIA (IN) (FT) (IN)	ELEVATION (IN)	ELEVATION (DEG) (IN)	AZIMUTH	AZIMUTH	SLEEVE DIA	SLEEVE DIA
X001	*****	EQUIPMENT HATCH	764	7.50	285	0	240.00	******	764	9.50	285	0	240.50	******
X002A	*****	PERSONNEL AIR LOCK	719	3.63	62	0	103.75	103.75	719	3.63	62	0	111.50	103.75
X002B	*****	PERSONNEL AIR LOCK	760	3.63	255	0	103.75	103.75	760	3.63	255	0	111.50	103.75
X003	MK062	FUEL TRANSFER TUBE	711	2.75	261	50	24.00	20.00	711	2.75	262	30	24.00	20.00
X004	F005	LOWR COMPT PURGE AIR EXH	735	0.0	36	30	24.00	24.00	722	8.00	21	0	54.16	54.16
X005	F005	INST ROOM PURGE AIR EXH	739	8.00	116	0	12.00	12.00	722	8.00	21	0	54.16	54.16
X006	F005	UPPER COMPT PURGE AIR EXH	749	3.00	293	0	24.00	24.00	722	8.00	21	0	54.16	54.16
X007	F005	UPPER COMPT PURGE AIR EXH	751	4.00	249	30	24.00	24.00	722	8.00	21	0	54.16	54.16
X008	*****	SPARE	790	0.0	266	0	24.00	*****	***	****	**	**	*****	*****
X008A	MK112	FEEDWATER BYPASS	737	0.0	8	36	20.00	6.00	737	0.0	7	31	30.00	6.00
X008B	MK113	FEEDWATER BYPASS	737	0.0	171	24	20.00	6.00	737	0.0	112	29	30.00	6.00
X008C	MK114	FEEDWATER BYPASS	737	0.0	188	36	20.00	6.00	737	0.0	187	31	30.00	6.00
X008D	MK115	FEEDWATER BYPASS	737	0.0	351	24	20.00	6.00	737	0.0	352	29	30.00	6.00
X009A	F002	UPPER COMPT PURGE AIR SUP	798	11.00	289	0	24.00	24.00	749	3.00	333	30	54.16	54.16
X009B	F002	UPPER COMPT PURGE AIR SUP	798	11.00	261	0	24.00	24.00	749	3.00	333	30	54.16	54.16
X010A	F002	LOWER COMPT PURGE AIR SUP	737	0.0	301	0	24.00	24.00	749	3.00	333	30	54.16	54.16
X010B	F002	LOWER COMPT PURGE AIR SUP	737	0.0	236	30	24.00	24.00	749	3.00	333	30	54.16	54.16
X011	F002	INST ROOM PURGE AIR SUP	728	6.00	57	0	12.00	12.00	749	3.00	333	30	54.16	54.16
X012A	MK067	FEEDWATER	731	0.0	7	40	30.00	16.00	731	0.0	7	40	40.00	16.00
X012B	MK068	FEEDWATER	731	0.0	172	20	30.00	16.00	731	0.0	172	20	40.00	16.00
X012C	MK069	FEEDWATER	731	0.0	187	40	30.00	16.00	731	0.0	187	40	40.00	16.00
X012D	MK070	FEEDWATER	731	0.0	352	20	30.00	16.00	731	0.0	352	20	40.00	16.00
X013A	MK063	MAIN STEAM	737	0.0	4	31	52.00	32.00	737	0.0	4	31	66.00	32.00
X013B	MK064	MAIN STEAM	737	0.0	175	29	52.00	32.00	737	0.0	175	29	66.00	32.00
revised by amendment 52														
X013C	MK065	MAIN STEAM	737	0.0	184	8	52.00	32.00	737	0.0	184	8	66.00	32.00
X013D	MK066	MAIN STEAM	737	0.0	355	52	52.00	32.00	737	0.0	355	52	66.00	32.00
X014A	AS014A	STEAM GENERATOR BLOW DOWN	739	6.00	9	30	16.00	2.00	739	6.00	9	30	16.00	2.00
X014B	AS014B	STEAM GENERATOR BLOW DOWN	739	6.00	350	30	16.00	2.00	739	6.00	350	30	16.00	2.00
X014C	AS014C	STEAM GENERATOR BLOW DOWN	734	5.00	9	30	16.00	2.00	734	5.00	9	30	16.00	2.00
X014D	AS014D	STEAM GENERATOR BLOW DOWN	734	5.00	350	30	16.00	2.00	734	5.00	350	30	16.00	2.00
X015	AS015	CHEM AND VOL SYS LETDN	733	0.0	301	0	18.00	2.00	733	0.0	301	0	18.00	2 .00
X016	MK019	NORMAL CHARGE	730	6.00	299	30	6.00	3.00	730	6.00	299	30	6.00	3.00
X017	MK027	RHR HOT LEG INJECTION	732	0.0	281	30	28.00	12.00	732	0.0	281	30	28.00	12.00
X018	*****	SPARE	740	0.0	145	0	2.00	*****	***	***	***	**	*****	*****
X019A	*****	SUMP SUCT TO RHR PUMP	689	0.0	***	**	24.00	18.00	***	***	***	**	*****	*****
X019B	*****	SUMP SUCT TO RHR PUMP	689	0.0	***	**	24.00	18.00	***	***	***	**	*****	*****

PENETRATION IDENTIF. PRIM CONT	PENETRATING SHIELD BLDG	EQUIPMENT NAME	-------PRIMARY CONTAINMENT PENETRATION------ ELEVATION (FT)	(IN)	AZIMUTH (DEG)	(MIN)	SLEEVE DIA (IN) (IN) (MIN)	PIPE DIA (FT) (IN)	------SHIELD BUILDING PENETRATION------ ELEVATION (IN) (DEG) (IN)		AZIMUTH		SLEEVE DIA	
X020A	AS020A	LOW HD SIS	732	0.0	291	30	24.00	8.00	732	0.0	291	30	24.00	8.00
X020B	AS020B	LOW HD SIS	732	0.0	287	30	24.00	8.00	732	0.0	287	30	24.00	8.00
X021	AS021	SI TO HOT LEG	728	6.00	289	30	20.00	4.00	728	6.00	289	30	20.00	4.00
X022	AS022	BIT CHARGING PUMP DISCH	730	3.00	294	45	20.00	3.00	730	3.00	294	45	20.00	3.00
X023	MK061	PAS CONT AIR INTK TR-B	729	0.0	283	0	3.00	0.38	734	9.0	250	0	3.00	0.38
X024	AS024	SIS RELIEF VALVE DISCH	727	6.00	301	0	20.00	4.00	727	6.00	301	0	20.00	4.00
X025A	MK044M	PRESSURIZER LIQUID SAMPLE	723	6.00	294	0	6.00	0.38	723	6.00	294	0	8.00	0.38
X025B	******	dP SENSOR	723	6.00	294	0	6.00	0.50	***	****	***	**	*****	*****
X025C	******	dP SENSOR	723	6.00	294	0	6.00	0.50	***	****	***	**	*****	*****
X025D	MK044M	PRESSURIZER STEAM SAMPLE	723	6.00	294	0	6.00	0.38	723	6.00	294	0	8.00	0.38
X026A	MK045M	ILRT SENSOR LINE	723	6.00	293	0	6.00	1.00	***	****	***	**	*****	*****
X026B	MK045M	ILRT SENSOR LINE	723	6.00	293	0	6.00	1.00	***	****	***	**	*****	*****
X026C	******	dP SENSOR	723	6.00	293	0	6.00	0.50	***	****	***	**	*****	*****
X027A	MK046M	STM GEN NO. 1 SAMPLE	723	6.00	292	0	6.00	0.38	723	6.00	292	0	8.00	0.38
X027B	MK046M	STM GEN NO. 2 SAMPLE	723	6.00	292	0	6.00	0.38	723	6.00	292	0	8.00	0.38
X027C	MK046M	STM GEN NO. 3 SAMPLE	723	6.00	292	0	6.00	0.38	723	6.00	292	0	8.00	0.38
X027D	MK046M	STM GEN NO. 4 SAMPLE	723	6.00	292	0	6.00	0.38	723	6.00	292	0	8.00	0.38
X028	MK034	PAS CONT SUMP RTRN TR-B	721	0.0	287	30	3.00	0.38	735	3.0	257	0	3.00	0.38
X029	MK050	CCS FROM HC PUMP COOLERS	720	0.0	288	30	6.00	6.00	720	0.0	288	30	10.00	6.00
X030	AS030	ACCUMMULATORS TO HOLDUP TR	720	6.00	291	30	16.00	0.75	720	6.00	291	30	16.00	0.75
X031	MK049	FIRE PROTECTION	722	0.0	289	30	6.00	4.00	722	0.0	289	30	10.00	4.00
X032	AS032	SI TO HOT LEGS	720	6.00	282	30	20.00	4.00	720	6.00	282	30	20.00	4.00
X033	AS033	SI TO LOW HEAD SI	720	6.00	277	30	20.00	4.00	720	6.00	277	30	20.00	4.00
X034	MK043	CONTROL AIR I AND C	720	6.00	299	30	8.00	2.00	720	6.00	299	30	8.00	2.00
X035	MK042	CCS FROM EXCESS LETDN HX	720	6.00	301	30	6.00	6.00	720	6.00	301	30	10.00	6.00
X036	MK020	SG CHEM CLEANING	742	6.00	280	0	24.00	24.00	742	6.00	280	0	24.00	*****
X037	MK014	MAINTENANCE PORT	771	6.00	265	0	12.00	12.00	771	6.00	265	0	12.00	12.00
X038	MK013	SPARE	771	6.00	268	0	12.00	*****	771	6.00	268	0	12.00	*****
Revised by Amendment 56														
X039A	MK055M	N2 TO ACCUMMULATORS	720	6.00	280	0	10.00	1.00	720	6.00	280	0	10.00	1.00
X039B	MK055M	N2 TO PRESS RELIEF TANK	720	6.00	280	0	10.00	0.75	720	6.00	280	0	10.00	0.75
X039C	MK055M	SPARE	720	6.00	280	0	10.00	*****	720	6.00	280	0	10.00	*****
X039D	MK055M	SPARE	720	6.00	280	0	10.00	*****	720	6.00	280	0	10.00	*****
X040A	MK009	AUXILIARY FEEDWATER	750	3.00	301	30	6.00	4.00	750	3.00	301	30	10.00	4.00
X040B	MK011	AUXILIARY FEEDWATER	748	3.00	301	30	6.00	4.00	748	3.00	301	30	10.00	4.00
X040C	MK010	SPARE	750	3.00	299	30	6.00	*****	750	3.00	299	30	8.00	*****
X040D	MK012	H2 PURGE	748	3.00	299	30	6.00	3.00	748	3.00	299	30	8.00	3.00
X041	MK047	FLOOR SUMP PUMP DISCH	719	6.00	294	0	6.00	2.00	719	6.00	294	0	6.00	2.00
X042	MK039	PRESS REL TANK MAKE-UP	723	6.00	301	0	6.00	3.00	723	6.00	301	0	6.00	3.00
X043A	MK031	TO RC PUMP SEALS	727	0.00	292	30	6.00	2.00	727	0.00	292	0	6.00	2.00

PENETRATION IDENTIF. PRIM CONT	PENETRATING SHIELD BLDG	EQUIPMENT NAME	-------PRIMARY CONTAINMENT PENETRATION------ ELEVATION (FT)	(IN)	AZIMUTH (DEG)	(MIN)	SLEEVE DIA (IN) (IN) (MIN)	PIPE DIA (FT) (IN)	------SHIELD BUILDING PENETRATION------ ELEVATION (IN) (DEG) (IN)		AZIMUTH		SLEEVE DIA	
X043B	MK029	TO RC PUMP SEALS	728	6.00	292	0	6.00	2.00	728	6.00	292	0	6.00	2.00
X043C	MK028	TO RC PUMP SEALS	728	6.00	293	30	6.00	2.00	728	6.00	293	30	6.00	2.00
X043D	MK030	TO RC PUMP SEALS	727	0.00	293	30	6.00	2.00	727	0.00	293	30	6.00	2.00
X044	MK037	FROM RC PUMP SEALS	727	6.00	281	30	8.00	4.00	727	6.00	281	30	12.00	4.00
X045	AS045	RC DRAIN TK AND PRT TO VH	723	0.00	281	30	16.00	1.00	723	0.0	281	30	16.00	1.00
X046	AS046	RC DRAIN TK PUMP DISCH	728	0.00	278	0	18.00	3.00	723	0.0	278	0	18.00	3.00
X047A	MK025	GLYCOL SUPPLY	808	6.00	293	0	20.00	6.00	796	0.0	293	0	12.00	6.00
X047B	MK026	GLYCOL RETURN	808	6.00	296	30	20.00	6.00	796	0.0	295	0	12.00	6.00
X048A	MK004	CONTAINMENT SPRAY	855	8.00	301	30	14.00	10.00	752	0.0	301	30	16.00	10.00
X048B	MK003	CONTAINMENT SPRAY	853	8.00	304	0	14.00	10.00	752	0.0	304	0	16.00	10.00
X049A	MK002	RHR SPRAY	855	8.00	306	0	12.00	8.00	752	0.0	306	0	12.0	8.00
X049B	MK001	RHR SPRAY	853	8.00	308	0	12.00	8.00	752	0.0	308	30	12.00	8.00
X050A	MK016	RCP THERM BARRIER RETURN	734	6.00	300	30	3.00	3.00	734	6.00	300	30	6.00	3.00
X050B	MK017	RCP THERM BARRIER SUPPLY	734	6.00	299	30	3.00	3.00	734	6.00	299	30	6.00	3.00
X051	MK0035	SPARE	728	6.00	286	30	6.00	*****	728	6.00	286	30	10.00	*****
X052	MK040	CCS TO RC PUMP COOLERS	722	6.00	299	30	6.00	6.00	722	6.00	299	30	10.00	6.00
X053	MK041	CCS TO EXCESS LETDN HX	721	6.00	301	0	6.00	6.00	721	6.00	301	0	10.00	6.00
X054	MK072	THIMBLE RENEWAL	740	0.0	90	0	8.00	8.00	740	0.0	90	0	8.00	8.00
X055	MK015	SPARE	771	6.00	262	0	12.00	*****	771	6.0	262	0	12.00	*****
X056A	MK080	LOWER CONT ERCW SUPPLY	720	0.0	353	0	6.00	6.00	708	0.0	348	0	10.00	8.00
X056B	MK127	SPARE	720	0.0	355	30	3.00	*****	720	0.0	355	30	6.00	*****
X057A	MK081	LOWER CONT ERCW RETURN	720	0.0	351	30	6.00	6.00	706	6.00	339	0	10.00	8.00
X057B	MK128	SPARE	720	0.0	354	15	3.00	*****	720	0.0	354	15	6.00	*****
X058A	MK079	LOWER CONT ERCW SUPPLY	720	0.0	7	0	6.00	6.00	706	6.00	349	30	10.00	8.00
X058B	MK126	SPARE	720	0.0	13	0	3.00	*****	720	0.0	13	0	6.00	*****
X059A	MK078	LOWER CONT ERCW RETURN	720	0.0	8	30	6.00	6.00	708	0.00	351	0	10.00	8.00
X059B	MK125	SPARE	720	0.0	14	30	3.00	*****	720	0.0	14	30	6.00	*****
4260A	MK077	LOWER CONT ERCW SUPPLY	720	0.0	173	0	6.00	6.00	706	6.00	11	0	10.00	8.00
X060B	MK132	SPARE	720	0.0	174	15	3.00	*****	720	0.0	174	15	6.00	*****
Revised by Amendment 56														
X061A	MK076	LOWER CONT ERCW RETURN	720	0.0	171	30	6.00	6.00	706	6.00	9	0	10.00	8.00
X061B	MK131	SPARE	720	0.0	175	30	3.00	*****	720	0.0	175	30	6.00	*****
X062A	MK074	LOWER CONT ERCW SUPPLY	720	0.0	187	0	6.00	6.00	706	6.00	7	0	10.00	8.00
X062B	MK130	SPARE	720	0.0	193	0	3.00	*****	720	0.0	195	0	6.00	*****
X063A	MK075	LOWER CONT ERCW RETURN	720	0.0	189	30	6.00	6.00	706	6.00	5	0	10.00	8.00
X063B	MK129	SPARE	720	0.0	194	30	3.00	*****	720	0.0	194	30	6.00	*****
X064	MK092	INST ROOM CHILLED H_2O RET	737	0.0	65	0	6.00	2.00	708	0.0	357	0	6.00	2.00
X065	MK090	INST ROOM CHILLED H_2O SUP	738	0.0	65	0	6.00	2.00	706	6.00	352	30	6.00	2.00
X066	MK093	INST ROOM CHILLED H_2O RET	737	0.0	104	0	6.00	2.00	706	0.0	355	30	6.00	2.00

PENETRATION IDENTIF. PRIM CONT	PENETRATING SHIELD BLDG	EQUIPMENT NAME	-------PRIMARY CONTAINMENT PENETRATION------ ELEVATION (FT)	(IN)	AZIMUTH (DEG)	(MIN)	SLEEVE DIA (IN) (IN) (MIN)	PIPE DIA (FT) (IN)	------SHIELD BUILDING PENETRATION------ ELEVATION (IN) (IN)	(DEG)	AZIMUTH		SLEEVE DIA	
X067	MK091	INST ROOM CHILLED H_2O SUP	738	0.0	104	0	6.00	2.00	708	0.0	354	0	6.00	2.00
X068	MK088	UPPER CONT ERCW SUPPLY	794	6.00	301	15	2.00	2.00	730	0.0	319	0	4.00	2.00
X069	MK086	UPPER CONT ERCW SUPPLY	796	6.00	301	15	2.00	2.00	730	0.0	321	0	4.00	2.00
X070	MK084	UPPER CONT ERCW RETURN	798	6.00	301	15	2.00	2.00	730	0.0	323	0	4.00	2.00
X071	MK082	UPPER CONT ERCW RETURN	800	6.00	301	15	2.00	2.00	730	0.0	325	0	4.00	2.00
X072	MK089	UPPER CONT ERCW RETURN	793	6.00	301	15	2.00	2.00	731	0.0	318	0	4.00	2.00
X073	MK087	UPPER CONT ERCW RETURN	795	6.00	301	15	2.00	2.00	731	0.0	320	0	4.00	2.00
X074	MK085	UPPER CONT ERCW SUPPLY	797	6.00	301	15	2.00	2.00	731	0.0	322	0	4.00	2.00
X075	MK083	UPPER CONT ERCW SUPPLY	799	6.00	301	15	2.00	2.00	731	0.0	324	0	4.00	2.00
X076	MK097	SERVICE AIR	711	0.0	300	0	2.00	2.00	708	9.00	300	0	6.00	2.00
X077	MK096	DEMINERALIZED WATER	710	6.00	299	0	6.00	2.00	708	9.00	299	0	6.00	2.00
X078	MK098	FIRE PROTECTION	798	9.00	301	0	6.00	4.00	708	9.00	301	0	6.00	4.00
X079A	MK023	ICE BLOWING	808	0.0	289	0	10.00	4.00	808	0.00	289	0	10.00	4.00
X079B	MK024	NEGATIVE RETURN	809	0.0	290	0	12.00	6.00	798	0.0	291	0	10.00	6.00
X080	MK071	LOWER COMP PRESS RELIEF	720	0.0	286	30	8.00	8.00	720	0.0	286	30	8.00	54.16
X081	AS081	RC DR TK TO GAS ANALYZER	718	0.0	287	0	12.00	0.75	718	0.0	287	0	12.00	0.75
X082	MK094	REFUEL CAV PRFCN PUMP SUCT	18	0.0	282	30	10.00	6.00	718	0.0	282	30	10.00	6.00
X083	MK095	REFUEL CAV PRFCN PUMP SUCT	733	0.0	294	0	8.00	4.00	733	0.0	294	0	8.00	4.00
X084A	MK099M	P.R.T. TO GAS ANALYZER	723	0.0	307	30	6.00	0.38	723	0.0	307	30	6.00	0.38
X084B	MK101	RVLIS	723	0.0	307	30	6.00	0.25	721	6.0	307	30	6.00	0.19
X084C	MK101	RVLIS	723	0.0	307	30	6.00	0.25	721	6.0	307	30	6.00	0.19
X084D	MK101	RVLIS	723	0.0	307	30	6.00	0.25	721	6.0	307	30	6.00	0.19
X085A	MK100M	EX LT DM HX TO BORON ANAL	723	0.0	306	0	6.00	0.38	723	0.0	306	0	6.00	0.38
X085B	MK100M	HOT LEG SAMPLE LOOPS 1 & 3	723	0.0	306	0	6.00	0.38	723	0.0	306	0	6.00	0.38
X085C	******	dP SENSOR	723	0.0	306	0	6.00	0.50	***	****	***	**	*****	****
X085D	MK100M	SPARE	723	0.0	306	0	6.00	****	723	0.0	306	0	6.00	****
X086A	MK061	PAS CONT AIR INTK TR-A	721	6.00	307	30	6.00	0.38	721	6.00	307	30	3.00	0.38
X086B	MK033	PAS CONT AIR RTRN TR-A	721	6.00	307	30	6.00	0.38	733	6.00	253	30	3.00	0.38
X086C	MK054	PAS CONT SUMP RTRN TR-A	721	6.00	307	30	6.00	0.38	721	6.00	307	30	4.00	0.38
X086D	MK101M	SPARE	721	6.00	307	30	6.00	****	721	6.00	307	30	6.00	****
X087A	MK102	SPARE	721	6.00	306	0	6.00	****	733	9.00	258	0	3.00	****
Revised by Amendment 56														
X087B	MK102	RVLIS	721	6.00	306	0	6.00	0.25	721	6.00	306	0	6.00	0.19
X087C	MK102	RVLIS	721	6.00	306	0	6.00	0.25	721	6.00	306	0	6.00	0.19
X087D	MK102	RVLIS	721	6.00	306	0	6.00	0.25	721	6.00	306	0	6.00	0.19
X088	MK103	SPARE	733	0.0	277	30	8.00	****	733	0.0	277	30	8.00	****
X089	MK104	SPARE	732	0.0	278	30	8.00	****	732	0.0	278	30	8.00	****
X090	MK105	CONTROL AIR TR-B	729	6.00	280	30	4.00	.00	729	6.00	280	30	4.00	2.00
X091	MK056	CONTROL AIR TR-A	723	6.00	291	0	4.00	2.00	723	6.00	291	0	6.00	2.00

PENETRATION IDENTIF. PRIM CONT	PENETRATING SHIELD BLDG	EQUIPMENT NAME	-------PRIMARY CONTAINMENT PENETRATION------ ELEVATION (FT)	(IN)	AZIMUTH (DEG)	(MIN)	SLEEVE DIA (IN) (IN) (MIN)	PIPE DIA (FT) (IN)	------SHIELD BUILDING PENETRATION------ ELEVATION (IN) (IN)	(DEG)	AZIMUTH		SLEEVE DIA	
X092A	*****	HYDROGEN ANALYZER TR-B	723	6.00	290	0	6.00	0.38	***	****	***	**	****	****
X092B	*****	HYDROGEN ANALYZER TR-B	723	6.00	290	0	6.00	0.38	***	****	***	**	****	****
X092C	MK034	PAS HOT LEG 1 TR-A	723	6.00	290	0	6.00	0.38	735	3.00	257	0	3.00	0.38
X092D	*****	SPARE	723	6.00	290	0	6.00	****	***	****	***	**	****	****
X093	MK058	ACCUM SAMPLE	723	6.00	289	0	3.00	0.38	723	6.00	289	0	3.00	0.38
X094A	*****	Spare	741	0.0	294	0	6.00	****	741	0.0	294	0	6.00	****
X094B	MK059M	LOWER COMP AIR MON INTAKE	741	0.0	294	0	6.00	1.50	741	0.0	294	0	6.00	1.50
X094C	MK059M	LOWER COMP AIR MON RETURN	741	0.0	294	0	6.00	1.50	741	0.0	294	0	6.00	1.50
X095A	*****	SPARE	741	0.0	293	0	6.00	****	741	0.0	293	0	6.00	****
X095B	MK060M	UPPER COMP AIR MON INTAKE	741	0.0	293	0	6.00	1.50	741	0.0	293	0	6.00	1.50
X095C	MK060M	UPPER COMP AIR MON RETURN	741	0.0	293	0	6.00	1.50	741	0.0	293	0	6.00	1.50
X096A	******	dP SENSOR	741	0.0	292	0	6.00	0.50	***	****	***	**	****	****
X096B	MK106M	ILRT SENSOR LINE	741	0.0	292	0	6.00	****	***	****	***	**	****	****
X096C	MK106M	ILRT SENSOR LINE	741	0.0	292	0	6.00	****	***	****	***	**	****	****
X097	******	dP SENSOR	741	0.0	291	0	3.00	0.50	***	****	***	**	****	****
X098	MK108	SPARE	741	0.0	290	0	3.00	****	741	0.0	290	0	3.00	****
X099	*****	HYDROGEN ANALYER TR-A	740	0.0	236	0	3.00	0.38	***	****	***	**	****	****
X100	*****	HYDROGEN ANALYZER TR-A	740	0.0	237	0	3.00	0.38	***	****	***	**	****	****
X101	MK054	SPARE	723	6.00	288	0	3.00	****	707	0.0	067	0	4.00	****
X102	*****	SPARE	728	0.0	236	0	3.00	****	***	****	***	**	****	****
X103	*****	SPARE	723	6.00	287	0	0.75	****	***	****	***	**	****	****
X104	*****	SPARE	728	0.0	237	0	0.75	****	***	****	***	**	****	****
X105	MK033	PAS CONT AIR RTRN TR-B	722	6.00	288	0	2.00	0.38	734	3.0	257	0	3.00	0.38
X106	MK048	PAS HOT LEG 3 TR-B	727	0.0	236	0	2.00	0.38	733	9.00	258	0	3.00	0.38
X107	MK038	RHR SUPPLY TO PUMPS	717	11.50	300	30	30.00	14.00	717	11.50	300	30	30.00	14.00
X108	AS108	MAINTENANCE PORT	711	6.00	218	0	24.00	12.00	711	6.00	218	0	18.00	12.00
X109	AS109	MAINTENANCE PORT	711	6.00	222	0	24.00	12.00	711	6.00	222	0	18.00	12.00
X110	MK032	SPARE	711	6.0	209	0	6.00	****	711	6.00	216	0	6.00	****
X111	*****	SPARE	845	9.00	90	0	8.00	****	***	****	***	**	****	****
X112	*****	SPARE	845	9.00	270	0	8.00	****	***	****	***	**	****	****
X113	*****	SPARE	740	0.00	216	0	2.00	****	***	****	***	**	****	****
X114	MK110	GLYCOL FLOOR COOLING (FR)	75	0.0	300	0	20.00	2.00	775	0.0	300	0	6.00	2.00
X115	MK111	GLYCOL FLOOR COOLING (TO)	771	6.00	300	0	20.00	2.00	771	6.00	300	0	6.00	2.00
X116	MK007	SPARE	760	0.0	300	0	16.00	*****	760	0.0	300	0	16.00	****
X117	MK008	MAINTENANCE PORT	758	0.0	300	0	16.00	*****	758	0.0	300	0	16.00	16.00
X118	MK018	LAYUP WATER TREATMENT	708	6.00	209	0	8.00	4.00	708	6.00	216	0	8.00	4.00
X119	*****	SPARE	844	5.00	90		0	4.00	****	****	***	**	*****	****
X120	*****	SPARE	844	5.00	270	0	4.00	*****	***	****	***	**	*****	****

Revised by Amendment 52

PENETRATION IDENTIF. PRIM	SHIELD	EQUIPMENT	POSSIBLE LEAK PATHS	10CFR CRITERIA CONFORM-ANCE		LINE STATUS DURING OERATIONAL NORMAL	PHASE SHTDN	----------ISOLATION VALVE IN PRIMARY CONTAINMENT---------- PRIMARY OPER VALVE MODE OF ACTUATING MODE OF ACCID. TYPE ACTUATION (SEC) ACTUATION	SECONDARY VALVE TIME OPER SIGNAL				
CONT	BLDG	NAME											
X001	*****	EQUIPMENT HATCH	AB	***	***	CLOSED	VARIES	CLOSED MAN. ******	DOOR LCL.MAN. **** *******				
X002A	******	PERSONNEL AIR LOCK	A D	***	***	CLOSED	OPEN	CLOSED MAN. ******	DOOR LCL.MAN. **** *******				
X002B	******	PERSONNEL AIR LOCK	A D	***	***	CLOSED	OPEN	CLOSED MAN. ******	DOOR LCL.MAN. **** *******				
X003	MK062	FUEL TRANSFER TUBE	AB D	***	***	CLOSED	VARIES	CLOSED MAN. ******	BLDFL LCL.MAN. **** *******				
X004	F005	LOWER COMPT PURGE AIR EXH	ABC E	54	56	VARIES	OPEN	CLOSED	BTFLY	AIR	AUTOTRIP	CONTVENT	4.00	REM.MAN.
X005	F005	INST ROOM PURGE AIR EXH	ABC E	54	56	VARIES	OPEN	CLOSED	BTFLY	AIR	AUTOTRIP	CONTVENT	4.00	REM.MAN.
X006	F005	UPPER COMPT PURGE AIR EXH	ABC E	54	56	VARIES	OPEN	CLOSED	BTFLY	AIR	AUTOTRIP	CONTVENT	4.00	REM.MAN.
X007	F005	UPPER COMPT PURGE AIR EXH	ABC E	54	56	VARIES	OPEN	CLOSED	BTFLY	AIR	AUTOTRIP	CONTVENT	4.00	REM.MAN.
X008	******	SPARE	*****	***	***	******	******	******	*****	***	********	******	****	*******
X008A	MK112	FEEDWATER BYPASS	BC E	54	57	CLOSED	CLOSED	CLOSED	*****	***	********	******	****	*******
X008B	MK113	FEEDWATER BYPASS	BC E	54	57	CLOSED	CLOSED	CLOSED	*****	***	********	******	****	*******
X008C	MK114	FEEDWATER BYPASS	BC E	54	57	CLOSED	CLOSED	CLOSED	*****	***	********	******	****	*******
X008D	MK115	FEEDWATER BYPASS	BC E	54	57	CLOSED	CLOSED	CLOSED	*****	***	********	******	****	*******
X009A	F002	UPPER COMPT PURGE AIR SUP	ABC E	54	56	VARIES	OPEN	CLOSED	BTFLY	AIR	AUTOTRIP	CONTVENT	4.00	REM.MAN.
X009B	F002	UPPER COMPT PURGE AIR SUP	ABC E	54	56	VARIES	OPEN	CLOSED	BTFLY	AIR	AUTOTRIP	CONTVENT	4.00	REM.MAN.
X010A	F002	LOWER COMPT PURGE AIR SUP	ABC E	54	56	VARIES	OPEN	CLOSED	BTFLY	AIR	AUTOTRIP	CONTVENT	4.00	REM.MAN.
X010B	F002	LOWER COMPT PURGE AIR SUP	ABC E	54	56	VARIES	OPEN	CLOSED	BTFLY	AIR	AUTOTRIP	CONTVENT	4.00	REM.MAN.
X011	F002	INST ROOM PURGE AIR SUP	ABC E	54	56	VARIES	OPEN	CLOSED	BTFLY	AIR	AUTOTRIP	CONTVENT	4.00	REM.MAN.
X012A	MK067	FEEDWATER	BC E	54	57	OPEN	CLOSED	CLOSED	*****	***	********	********	****	*******
X012B	MK068	FEEDWATER	BC E	54	57	OPEN	CLOSED	CLOSED	*****	***	********	********	****	*******
X012C	MK069	FEEDWATER	BC E	54	57	OPEN	CLOSED	CLOSED	*****	***	********	********	****	*******
X012D	MK070	FEEDWATER	BC E	54	57	OPEN	CLOSED	CLOSED	*****	***	********	********	****	*******
X013A	MK063	MAIN STEAM	BC E	54	57	OPEN	CLOSED	CLOSED	*****	***	********	********	****	*******
X013B	MK064	MAIN STEAM	BC E	54	57	OPEN	CLOSED	CLOSED	*****	***	********	********	****	*******
X013C	MK065	MAIN STEAM	BC E	54	57	OPEN	CLOSED	CLOSED	*****	***	********	********	****	*******
X013D	MK066	MAIN STEAM	BC E	54	57	OPEN	CLOSED	CLOSED	*****	***	********	********	****	*******
X014A	AS014A	STEAM GENERATOR BLOW DOWN	B E	54	56	OPEN	CLOSED	CLOSED	GLOBE	AIR	AUTOTRIP	PHASE A	10.00	REM.MAN.
X014B	AS014B	STEAM GENERATOR BLOW DOWN	B E	54	56	OPEN	CLOSED	CLOSED	GLOBE	AIR	AUTOTRIP	PHASE A	10.00	REM.MAN.

X014C	AS014C	STEAM GENERATOR BLOW DOWN	B E	54	56	OPEN	CLOSED	CLOSED	GLOBE	AIR	AUTOTRIP	PHASE A	10.00	REM.MAN.
X014D	AS014D	STEAM GENERATOR BLOW DOWN	B E	54	56	OPEN	CLOSED	CLOSED	GLOBE	AIR	AUTOTRIP	PHASE A	10.00	REM.MAN.
X015	ASO15	CHEM AND VOL SYS LETDN	B D	54	55	OPEN	VARIES	CLOSED	GLOBE	AIR	AUTOTRIP	PHASE A	10.00	REM.MAN.
X016	MK019	NORMAL CHARGE	A D	54	55	OPEN	VARIES	CLOSED	CHECK	***	SELF ACT	*******	****	REM.MAN.
X017	MK027	RHR HOT-LEG INJECTION	B D	54	55	CLOSED	CLOSED	VARIES	CHECK	***	SELF ACT	*******	****	*******
X018	******	SPARE	*****	***	***	******	******	******	*****	***	********	*******	****	*******
X019A	******	SUMP SUCTION TO RHR PUMP	D	54	56	CLOSED	CLOSED	VARIES	*****	***	********	*******	****	*******
X019B	******	SUMP SUCTION TO RHR PUMP	D	54	56	CLOSED	CLOSED	VARIES	*****	***	********	*******	****	*******
X020A	AS020A	LOW HD SIS	B D	54	55	CLOSED	CLOSED	VARIES	CHECK	***	SELF ACT	*******	****	*******
X020B	AS020B	LOW HD SIS	B D	54	55	CLOSED	CLOSED	VARIES	CHECK	***	SELF ACT	*******	****	*******
X021	AS021	SI TO HOT LEGS	B D	54	55	CLOSED	CLOSED	VARIES	CHECK	***	SELF ACT	*******	****	*******
X022	AS022	BIT CHARGING PUMP DISCH	B D	54	55	CLOSED	CLOSED	VARIES	CHECK	***	SELF ACT	*******	****	*******
Revised by Amendment 52														
X023	MK061	PAS CONT AIR INTR LC TR-B	AB D	54	56	CLOSED	CLOSED	VARIES	GLOBE	SOLND	REM.MAN.	*******	5.00	LCL.MAN.
X024	ASO24	SIS RELIEF VALVE DISCH	B D	54	56	CLOSED	CLOSED	CLOSED	CHECK	***	SELF ACT	*******	****	*******
X025A	MK044M	PRESSURIZER LIQUID SAMPLE	A D	54	56	VARIES	VARIES	CLOSED	GLOBE	AIR	AUTOTRIP	PHASE A	5.00	REM.MAN.
X025B	******	dP SENSOR	B	54	***	OPEN	OPEN	OPEN	*****	***	********	*******	****	*******
X025C	******	dP SENSOR	B	54	***	OPEN	OPEN	OPEN	*****	***	********	*******	****	*******
X025D	MK044M	PRESSURIZER STEAM SAMPLE	A D	54	56	VARIES	VARIES	CLOSED	GLOBE	AIR	AUTOTRIP	PHASE A	5.00	REM.MAN.
X026A	MK045M	ILRT SENSOR LINE	B	54	56	CLOSED	VARIES	CLOSED	GLOBE	MAN.	LCL.MAN.	*******	****	*******
X026B	MK045M	ILRT SENSOR LINE	B	54	56	CLOSED	VARIES	CLOSED	GLOBE	MAN.	LCL.MAN.	*******	****	*******
X026C	******	dP SENSOR	B	54	***	OPEN	OPEN	OPEN	*****	***	********	*******	****	*******
X027A	MK046M	STM GEN #1 SAMPLE	AB D	54	56	VARIES	VARIES	CLOSED	GLOBE	AIR	AUTOTRIP	PHASE A	10.00	REM.MAN.
X027B	MK046M	STM GEN #2 SAMPLE	AB D	54	56	VARIES	VARIES	CLOSED	GLOBE	AIR	AUTOTRIP	PHASE A	10.00	REM.MAN.
X027C	MK046M	STM GEN #3 SAMPLE	AB D	54	56	VARIES	VARIES	CLOSED	GLOBE	AIR	AUTOTRIP	PHASE A	10.00	REM.MAN.
X027D	MK046M	STM GEN #4 SAMPLE	AB D	54	56	VARIES	VARIES	CLOSED	GLOBE	AIR	AUTOTRIP	PHASE A	10.00	REM.MAN.
X028	MK034	PAS CONT SUMP RTRN TR-B	AB D	54	56	CLOSED	CLOSED	VARIES	CHECK	***	SELF ACT	*******	****	*******
X029	MK050	CCS FROM RC PUMP COOLERS	A D	54	56	OPEN	OPEN	CLOSED	BTFLY	MOTOR	AUTOTRIP	PHASE B	60.00	REM.MAN.
X030	AS030	ACCUMULATORS TO HOLDUP TK	B D	54	56	VARIES	VARIES	CLOSED	GLOBE	AIR	AUTOTRIP	PHASE A	10.00	REM.MAN.
X031	MK049	FIRE PROTECTION	AB D	54	56	OPEN	OPEN	CLOSED	CHECK	***	SELF ACT	*******	****	*******
X032	AS032	SI TO HOT LEGS	B D	54	55	CLOSED	CLOSED	VARIES	CHECK	***	SELF ACT	*******	****	*******
X033	AS033	SI TO HOT LEGS	B D	54	55	CLOSED	CLOSED	VARIES	CHECK	***	SELF ACT	*******	****	*******
X034	MK043	CONTROL AIR I AND C	AB D	54	56	OPEN	OPEN	CLOSED	CHECK	***	SELF ACT	*******	****	*******
X035	MK042	CCS FROM EXCESS LETDN HX	A D	54	56	VARIES	CLOSED	CLOSED	*****	***	********	*******	****	*******
X036	MK020	SG CHEMICAL CLEANING	AB	***	***	CLOSED	VARIES	CLOSED	*****	***	********	*******	****	*******
X037	MK014	MAINTENANCE PORT	AB	***	***	CLOSED	VARIES	CLOSED	*****	***	********	*******	****	*******
X038	MK013	SPARE	*****	***	***	*******	******	******	*****	***	********	*******	****	*******
X039A	MK055M	N2 TO ACCUMULATORS	A D	54	56	OPEN	OPEN	CLOSED	CHECK	***	SELF ACT	*******	****	*******
X039B	MK055M	N2 TO PRESS. RELIEF TANK	A D	54	56	OPEN	OPEN	CLOSED	CHECK	***	SELF ACT	*******	****	*******
X039C	MK055M	SPARE	*****	***	***	*****	******	******	*****	***	********	*******	****	*******
X039D	MK055M	SPARE	*****	***	***	*****	******	******	*****	***	********	*******	****	*******
X040A	MK009	AUXILIARY FEEDWATER	BC E	54	57	CLOSED	CLOSED	VARIES	*****	***	********	*******	****	*******
X040B	MK011	AUXILIARY FEEDWATER	BC E	54	57	CLOSED	CLOSED	VARIES	*****	***	********	*******	****	*******
X040C	MK010	SPARE	*****	***	***	*****	******	******	*****	***	********	*******	****	*******
X040D	MK012	H2 PURGE	A D	***	***	CLOSED	CLOSED	VARIES	*****	***	********	*******	****	*******
X041	MK047	FLOOR SUMP PUMP DISCH	A D	54	56	OPEN	OPEN	CLOSED	BALL	AIR	AUTOTRIP	PHASE A	10.00	REM.MAN.
X042	MK039	PRESS REL TANK MAKEUP	AB D	54	56	VARIES	CLOSED	CLOSED	CHECK	***	SELF ACT	*******	****	*******
X043A	MK031	TO RC PUMP SEALS	A D	54	56	OPEN	CLOSED	CLOSED	CHECK	***	SELF ACT	*******	****	*******
X043B	MK029	TO RC PUMP SEALS	A D	54	56	OPEN	CLOSED	CLOSED	CHECK	***	SELF ACT	*******	****	*******
X043C	MK028	TO RC PUMP SEALS	A D	54	56	OPEN	CLOSED	CLOSED	CHECK	***	SELF ACT	*******	****	*******
X043D	MK030	TO RC PUMP SEALS	A D	54	56	OPEN	CLOSED	CLOSED	CHECK	***	SELF ACT	*******	****	*******
X044	MK037	FROM RC PUMP SEALS	A D	54	56	OPEN	VARIES	CLOSED	GATE	MOTOR	AUTOTRIP	PHASE A	10.00	REM.MAN.
X045	AS045	RC DRAIN TK AND PRT TO VH	B D	54	56	OPEN	OPEN	CLOSED	DIAPH	AIR	AUTOTRIP	PHASE A	10.00	REM.MAN.
Revised by Amendment 56														
X046	AS046	RC DRAIN TK PUMP DISCHARGE	B D	54	56	OPEN	OPEN	CLOSED	DIAPH	AIR	AUTOTRIP	PHASE A	10.00	REM.MAN.
X047A	MK025	GLYCOL SUPPLY	B D	54	56	OPEN	OPEN	CLOSED	DIAPH	AIR	AUTOTRIP	PHASE A	30.00	REM.MAN.
X047B	MK026	GLYCOL RETURN	B D	54	56	OPEN	OPEN	CLOSED	DIAPH	AIR	AUTOTRIP	PHASE A	30.00	REM.MAN.
X048A	MK004	CONTAINMENT SPRAY	A D	54	56	CLOSED	CLOSED	VARIES	CHECK	***	SELF ACT	*******	****	*******

X048B	MK003	CONTAINMENT SPRAY	A D	54	56	CLOSED	CLOSED	VARIES	CHECK	***	SELF ACT	*******	****	*******
X049A	MK002	RHR SPRAY	A D	54	56	CLOSED	CLOSED	VARIES	CHECK	***	SELF ACT	*******	****	*******
X049B	MK001	RHR SPRAY	A D	54	56	CLOSED	CLOSED	VARIES	CHECK	***	SELF ACT	*******	****	*******
X050A	MK016	RCP THERM BARRIER RETURN	A D	54	56	OPEN	OPEN	CLOSED	GATE	MOTOR	AUTOTRIP	PHASE B	60.00	REM.MAN.
X050B	MK017	RCP THERM BARRIER SUPPLY	A D	54	56	OPEN	OPEN	CLOSED	CHECK	***	SELF ACT	*******	****	*******
X051	MK035	SPARE	*****	***	***	*****	******	******	*****	***	********	*******	****	*******
X052	MK040	CCS TO RC PUMP COOLERS	A D	54	56	OPEN	OPEN	CLOSED	CHECK	***	SELF ACT	*******	****	*******
X053	MK041	CCS TO EXCESS LETDN HX	A D	54	57	VARIES	CLOSED	CLOSED	*****	***	********	*******	****	*******
X054	MK072	THIMBLE RENEWAL	BC	***	***	CLOSED	VARIES	CLOSED	*****	***	********	*******	****	*******
X055	MK015	SPARE	*****	***	***	*****	******	******	*****	***	********	*******	****	*******
X056A	MK080	LOWER CONT ERCW SUPPLY	AB DE	54	56	OPEN	OPEN	CLOSED	CHECK	***	SELF ACT	*******	****	*******
X056B	MK127	SPARE	*****	***	***	*****	******	******	*****	***	********	*******	****	*******
X057A	MK081	LOWER CONT ERCW RETURN	AB DE	54	56	OPEN	OPEN	CLOSED	BTFLY	MOTOR	AUTOTRIP	PHASE B	60.00	REM.MAN.
X057B	MK128	SPARE	*****	***	***	*****	******	******	*****	***	********	*******	****	*******
X058A	MK079	LOWER CONT ERCW SUPPLY	AB DE	54	56	OPEN	OPEN	CLOSED	CHECK	***	SELF ACT	PHASE B	60.00	REM.MAN.
X058B	MK126	SPARE	*****	***	***	*****	******	******	*****	***	********	*******	****	*******
X059A	MK078	LOWER CONT ERCW RETURN	AB DE	54	56	OPEN	OPEN	CLOSED	BTFLY	MOTOR	AUTOTRIP	PHASE B	60.00	REM.MAN.
X059B	MK125	SPARE	*****	***	***	*****	******	******	*****	***	********	*******	****	*******
X060A	MK077	LOWER CONT ERCW SUPPLY	AB DE	54	56	OPEN	OPEN	CLOSED	CHECK	*****	SELF ACT	*******	****	*******
X060B	MK132	SPARE	*****	***	***	*****	******	******	*****	***	********	*******	****	*******
X061A	MK076	LOWER CONT ERCW RETURN	AB DE	54	56	OPEN	OPEN	CLOSED	BTFLY	MOTOR	AUTOTRIP	PHASE B	60.00	REM.MAN.
X061B	MK131	SPARE	*****	***	***	*****	******	******	*****	***	********	*******	****	*******
X062A	MK074	LOWER CONT ERCW SUPPLY	AB DE	54	56	OPEN	OPEN	CLOSED	CHECK	***	SELF ACT	*******	****	*******
X062B	MK130	SPARE	*****	***	***	*****	******	******	*****	***	********	*******	****	*******
X063A	MK075	LOWER CONT ERCW RETURN	AB DE	54	56	OPEN	OPEN	CLOSED	BTFLY	MOTOR	AUTOTRIP	PHASE B	60.00	REM.MAN.
X063B	MK129	SPARE	*****	***	***	*****	******	******	*****	***	********	*******	****	*******
X064	MK092	INST ROOM CHILLED H_20 RET	AB D	54	56	OPEN	OPEN	CLOSED	PLUG	AIR	AUTOTRIP	PHASE A	10.00	REM.MAN.
X065	MK090	INST ROOM CHILLED H_20 SUP	AB D	54	56	OPEN	OPEN	CLOSED	PLUG	AIR	AUTOTRIP	PHASE A	10.00	REM.MAN.
X066	MK093	INST ROOM CHILLED H_20 RET	AB D	54	56	OPEN	OPEN	CLOSED	PLUG	AIR	AUTOTRIP	PHASE A	10.00	REM.MAN.
X067	MK094	INST ROOM CHILLED H_20 SUP	AB D	54	56	OPEN	OPEN	CLOSED	PLUG	AIR	AUTOTRIP	PHASE A	10.00	REM.MAN.
X068	MK088	UPPER CONT ERCW SUPPLY	AB DE	54	56	OPEN	OPEN	CLOSED	CHECK	***	SELF ACT	*******	****	*******
X069	MK086	UPPER CONT ERCW SUPPLY	AB DE	54	56	OPEN	OPEN	CLOSED	CHECK	***	SELF ACT	*******	****	*******
X070	MK084	UPPER CONT ERCW RETURN	AB DE	54	56	OPEN	OPEN	CLOSED	PLUG	MOTOR	AUTOTRIP	PHASE B	60.00	REM.MAN.
X071	MK082	UPPER CONT ERCW RETURN	AB DE	54	56	OPEN	OPEN	CLOSED	PLUG	MOTOR	AUTOTRIP	PHASE B	60.00	REM.MAN.
X072	MK089	UPPER CONT ERCW RETURN	AB DE	54	56	OPEN	OPEN	CLOSED	PLUG	MOTOR	AUTOTRIP	PHASE B	60.00	REM.MAN.
X073	MK087	UPPER CONT ERCW RETURN	AB DE	54	56	OPEN	OPEN	CLOSED	PLUG	MOTOR	AUTOTRIP	PHASE B	60.00	REM.MAN.
Revised by Amendment 56														
X074	MK085	UPPER CONT ERCW SUPPLY	AB DE	54	56	OPEN	OPEN	CLOSED	CHECK	***	SELF ACT	*******	****	*******
X075	MK083	UPPER CONT ERCW SUPPLY	AB DE	54	56	OPEN	OPEN	CLOSED	CHECK	***	SELF ACT	*******	****	*******
X076	MK097	SERVICE AIR	A D	54	56	CLOSED	OPEN	CLOSED	DIAPH	MAN.	LCL.MAN.	*******	****	*******
X077	MK096	DEMINERALIZED WATER	A D	54	56	CLOSED	OPEN	CLOSED	DIAPH	MAN.	LCL.MAN.	*******	****	*******
X078	MK098	FIRE PROTECTION	AB D	54	56	OPEN	OPEN	CLOSED	CHECK	****	SELF ACT	*******	****	*******
X079A	MK023	ICE BLOWING	AB	54	56	CLOSED	VARIES	CLOSED	BLDFL	MAN.	LCL.MAN.	*******	****	*******
X079B	MK024	NEGATIVE RETURN	AB	54	56	CLOSED	VARIES	CLOSED	BLDFL	MAN.	LCL.MAN.	*******	****	*******
X080	MK071	LOWER COMP PRESS RELIEF	AB CE	54	56	VARIES	CLOSED	CLOSED	BTFLY	AIR	AUTOTRIP	CONTVENT	4.00	REM.MAN.
X081	AS081	RC DR. TK. TO GAS ANALYZER	A D	54	56	VARIES	OPEN	CLOSED	DIAPH	AIR	AUTOTRIP	PHASE A	10.00	REM.MAN.
X082	MK094	REFUEL CAV PRFCN PUMP SUCT	AB D	54	56	CLOSED	VARIES	CLOSED	DIAPH	MAN.	LCL.MAN.	*******	****	*******
X083	MK095	REFUEL CAV PRFCN PUMP DISCHAB	D54	56	CLOSED	VARIES	CLOSED	DIAPH	MAN.	LCL.MAN.	*******	****	*******	
X084A	MK099M	P.R.T. TO GAS ANALYZER	A D	54	56	VARIES	OPEN	CLOSED	GLOBE	AIR	AUTOTRIP	PHASE A	10.00	REM.MAN.
X084B	MK101	RVLIS	B D	54	***	OPEN	OPEN	OPEN	*****	***	********	*******	****	*******
X084C	MK101	RVLIS	B D	54	***	OPEN	OPEN	OPEN	*****	***	********	*******	****	*******
X084D	MK101	RVLIS	B D	54	***	OPEN	OPEN	OPEN	*****	***	********	*******	****	*******
X085A	MK100M	EX.LT.DH.HX TO BORON ANAL	AB D	54	56	VARIES	CLOSED	CLOSED	GLOBE	AIR	AUTOTRIP	PHASE A	5.00	REM.MAN.
X085B	MK100M	HOT LEG SAMPLE - LOOPS 1&3	AB D	54	55	VARIES	CLOSED	CLOSED	GLOBE	AIR	AUTOTRIP	PHASE A	10.00	REM.MAN.
X085C	******	dP SENSOR	B	54	***	OPEN	OPEN	OPEN	*****	***	********	*******	****	*******
X085D	MK100M	SPARE	****	***	***	******	******	******	*****	***	********	*******	****	*******
X086A	MK061	PAS CONT AIR INTK UC TR-A	AB D	54	56	CLOSED	CLOSED	VARIES	GLOBE	SOLND	REM.MAN.	*******	5.00	LCL.MAN.

X086B	MK033	PAS CONT AIR RTRN TR-A	AB D	54	56	CLOSED	CLOSED	VARIES	CHECK	***	SELF ACT	*******	****	*******
X086C	MK054	PAS CONT SUMP RTRN TR-A	AB D	54	56	CLOSED	CLOSED	VARIES	CHECK	***	SELF ACT	*******	****	*******
X086D	MK101M	SPARE	****	***	***	******	******	******	*****	***	********	*******	****	*******
X087A	MK102	SPARE	****	***	***	******	******	******	*****	***	********	*******	****	*******
X087B	MK102	RVLIS	B D	54	***	OPEN	OPEN	OPEN	*****	***	********	*******	****	*******
X087C	MK102	RVLIS	B D	54	***	OPEN	OPEN	OPEN	*****	***	********	*******	****	*******
X087D	MK102	RVLIS	B D	54	***	OPEN	OPEN	OPEN	*****	***	********	*******	****	*******
X088	MK103	SPARE	****	***	***	******	******	******	*****	***	********	*******	****	*******
X089	MK104	SPARE	****	***	***	******	******	******	*****	***	********	*******	****	*******
X090	MK105	CONTROL AIR TR-B	AB D	54	56	OPEN	OPEN	CLOSED	CHECK	***	SELF ACT	*******	****	*******
X091	MK105	CONTROL AIR TR-A	AB D	54	56	OPEN	OPEN	CLOSED	CHECK	***	SELF ACT	*******	****	*******
X092A	*****	HYDROGEN ANALYZER TR-B	B	54	56	CLOSED	CLOSED	OPEN	GLOBE	AIR	REM.MAN.	*******	5.00	LCL.MAN.
X092B	*****	HYDROGEN ANALYZER TR-B	B	54	56	CLOSED	CLOSED	OPEN	GLOBE	AIR	REM.MAN.	*******	5.00	LCL.MAN.
X092C	MK034	PAS HOT LEG 1 TR-B	AB D	54	55	CLOSED	CLOSED	VARIES	GLOBE	SOLND	REM.MAN.	*******	5.00	LCL.MAN.
X092D	*****	SPARE	****	***	***	******	******	******	*****	****	********	*******	****	*******
X093	MK058	ACCUM SAMPLE	AB D	54	56	VARIES	CLOSED	CLOSED	GLOBE	AIR	AUTOTRIP	PHASE A	5.00	REM.MAN.
X094A	MK059A	SPARE	****	***	***	******	******	******	*****	****	********	*******	****	*******
X094B	MK059A	UPPER COMP AIR MON INTAKE	AB D	54	56	OPEN	OPEN	CLOSED	GLOBE	AIR	AUTOTRIP	CONTVENT	5.00	REM.MAN.
X094C	MK059A	UPPER COMP AIR MON RETURN	AB D	54	56	OPEN	OPEN	CLOSED	GLOBE	AIR	AUTOTRIP	CONTVENT	5.00	REM.MAN.
X095A	MK060M	SPARE	****	***	***	******	******	******	*****	****	********	*******	****	*******
X095B	MK060M	UPPER COMP AIR MON INTAKE	AB D	54	56	OPEN	OPEN	CLOSED	GLOBE	AIR	AUTOTRIP	CONTVENT	5.00	REM.MAN.
X095C	MK060M	UPPER COMP AIR MON INTAKE	AB D	54	56	OPEN	OPEN	CLOSED	GLOBE	AIR	AUTOTRIP	CONTVENT	5.00	REM.MAN.
X096A	******	dP SENSOR	B	54	***	OPEN	OPEN	OPEN	*****	***	********	********	****	*******
X096B	MK106M	ILRT SENSOR LINE	B	54	56	CLOSED	VARIES	CLOSED	GLOBE	MAN	LCL.MAN.	********	****	*******
X096C	MK106M	ILRT SENSOR LINE	B	54	56	CLOSED	VARIES	CLOSED	GLOBE	MAN	LCL.MAN.	********	****	*******
X097	******	dP SENSOR	B	54	56	OPEN	OPEN	CLOSED	SOLND	AIR	AUTOTRIP	PHASE A	5.00	LCL.MAN.
X098	MK108	SPARE	****	***	***	******	******	******	*****	***	********	********	****	*******
X099	******	H2 ANALYZER TR-A	B	54	56	CLOSED	CLOSED	OPEN	GLOBE	AIR	REM.MAN.	********	5.00	LCL.MAN.
X100	******	H2 ANALYZER TR-A	B	54	56	CLOSED	CLOSED	OPEN	GLOBE	AIR	REM.MAN.	********	5.00	LCL.MAN.
X101	MK054	SPARE	****	***	***	******	******	******	*****	***	********	********	****	*******
X102	******	SPARE	****	***	***	******	******	******	*****	***	********	********	****	*******
X103	******	SPARE	****	***	***	******	******	******	*****	***	********	********	****	*******
X104	******	SPARE	****	***	***	******	******	******	*****	***	********	********	****	*******
X105	MK033	PAS CONT AIR RTRN TR-B	AB D	54	56	CLOSED	CLOSED	VARIES	CHECK	***	SELF ACT	********	****	*******
X106	MK048	PAS HOT LEG 3 TR-B	AB D	54	56	CLOSED	CLOSED	VARIES	GLOBE	SOLND	REM.MAN.	********	5.00	LCL.MAN.
X107	MK038	RHR SUPPLY TO PUMPS	B D	54	55	CLOSED	VARIES	VARIES	GATE	MOTOR	REM.MAN.	********	15.00	LCL.MAN.
X108	AS108	MAINTENANCE PORT	B D	54	56	CLOSED	VARIES	CLOSED	*****	***	********	********	****	*******
X109	AS109	MAINTENANCE PORT	B D	54	56	CLOSED	VARIES	CLOSED	*****	***	********	********	****	*******
X110	MK032	SPARE	****	***	***	******	******	******	*****	***	********	********	****	*******
X111	******	SPARE	****	***	***	******	******	******	*****	***	********	********	****	*******
X112	******	SPARE	****	***	***	******	******	******	*****	***	********	********	****	*******
X113	******	SPARE	****	***	***	******	******	******	*****	***	********	********	****	*******
X114	MK110	GLYCOL FLOOR COOLING (FROM)	AB D	54	56	OPEN	OPEN	CLOSED	DIAPH	AIR	AUTOTRIP	PHASE A	30.00	REM.MAN.
X115	MK111	GLYCOL FLOOR COOLING (TO)	AB D	54	56	OPEN	OPEN	CLOSED	DIAPH	AIR	AUTOTRIP	PHASE A	30.00	REM.MAN.
X116	MK007	SPARE	****	***	***	******	******	******	*****	***	********	********	****	*******
X117	MK008	MAINTENANCE PORT	AB	***	***	CLOSED	VARIES	CLOSED	*****	***	********	********	****	*******
X118	MK018	LAYUP WATER TREATMENT	ABC	***	***	CLOSED	OPEN	CLOSED	BLDFL	MAN.	LCL.MAN.	********	****	*******
X119	******	SPARE	****	***	***	******	******	******	*****	***	********	********	****	*******
X120	******	SPARE	****	***	***	******	******	******	*****	***	********	********	****	*******

**********CLEANUP STARTS WITH NEXT PAGE**********

PENETRATION SHIELD	ISOLATION VALVE DATA VALVE	ESF	POS	FAIL	VALVE	ESF	POS	FAIL IND	POS.	REQUIREMENT NO.	TRAIN	IND	POS.	NO.	ACCIDENT PENETRATION DETAILS IDENTIF.	IN PRIMARY CONTAINMENT	IN ANNULUS	OUTSIDE SHIELD BLDG	OPERATIONAL	INSUL- ATION	FLUED	NO. OF PRIM. TRAIN	HEAD (HR)	ANNULUS USED	CONT. LOCATION	BLDG. BELLOWS	NO.	TRAIN
X001		******			******	******	*****	***	******		******			*****	***		******	******		******		***	**********		NO	********	0	
X002A	******		******		*****	***	******		******		*****	***		******	******		******	******		******		***	******	*******	NO	********	0	
X002B	******		******		*****	***	******		******		*****	***		******	******		******	******		******		***	******	*******	NO	********	0	
X003	MK062		******		*****	***	******		******		*****	***		******	78-600		******	NO	AS IS	*******	NO	********	1					
X004	F005		30-056		A	YES	CLOSED		30-057		B	YES		CLOSED	30-061		A	YES	CLOSED	0.0833	NO	********	0					
X005	F005		30-058		B	YES	CLOSED		30-059		A	YES		CLOSED	30-061		A	YES	CLOSED	0.0833	NO	********	0					
X006	F005		30-050		B	YES	CLOSED		30-051		A	YES		CLOSED	30-061		A	YES	CLOSED	0.0833	NO	********	0					
X007	F005		30-052		A	YES	CLOSED		30-053		B	YES		CLOSED	30-061		A	YES	CLOSED	0.0833	NO	********	0					
X008	******		******		*****	***	******		******		*****	***		******	******		******	***	******	*********								
X008A	MK112		******		*****	***	******		******		*****	***		******	3-236		A B	YES	CLOSED	0.0833	YES	OUTDOORS	2					
X008B	MK113		******		*****	***	******		******		*****	***		******	3-239		A B	YES	CLOSED	0.0833	YES	OUTDOORS	2					
X008C	MK114		******		*****	***	******		******		*****	***		******	3-242		A B	YES	CLOSED	0.0833	YES	OUTDOORS	2					
X008D	MK115		******		*****	***	******		******		*****	***		******	3-245		A B	YES	CLOSED	0.0833	YES	OUTDOORS	2					
X009A	F002		30-008		B	YES	CLOSED		30-007		A	YES		CLOSED	30-002		A	YES	CLOSED	0.0833	NO	********	0					
X009B	F002		30-010		A	YES	CLOSED		30-009		B	YES		CLOSED	30-002		A	YES	CLOSED	0.0833	NO	********	0					
X010A	F002		30-015 B	YES CLOSED	30-014	A	YES	CLOSED	30-002	A	YES	CLOSED	0.0833	NO	********	0												
X010B	F002		30-017A	YES CLOSED	30-016		B	YES	CLOSED	30-002	A	YES	CLOSED	0.0833	NO	********	0											
X011	F002		30-020A	YES CLOSED	30-019		B	YES	CLOSED	30-002	A	YES	CLOSED	0.0833	NO	********	0											
X012A	MK067		******		*****	***	******		******		*****	***		******	3-33		A	YES	AS IS	0.0833	YES	OUTDOORS	2					
X012B	MK068	******	*****		***	******	******		*****		***	******		3-47	B	YES	AS IS	0.0833	YES	OUTDOORS	2							
X012C	MK069	******	*****		***	******	******		*****		***	******		3-87	A	YES	AS IS	0.0833	YES	OUTDOORS	2							
X012D	MK070	******	*****		***	******	******		*****		***	******		3-100	B	YES	AS IS	0.0833	YES									

```
                                                                                OUTDOORS   2
X013A MK063****** *****                    ***     ******  ******  *****     ***     ******  1-4      AB     YES  CLOSED  0.0833
                                                                                YES OUTDOORS   2
X013B MK064****** *****                    ***     ******  ******  *****     ***     ******  1-11   AB  YES  CLOSED  0.0833YES
                                                                                OUTDOORS   2
X013C MK065****** *****                    ***     ******  ******  *****     ***     ******  1-22   AB  YES  CLOSED  0.0833YES
                                                                                OUTDOORS   2
X013D MK066****** *****                    ***     ******  ******  *****     ***     ******  1-29   AB  YES  CLOSED  0.0833YES
                                                                                OUTDOORS   2
X014A AS014A 01-182 B     YES CLOSED******  *****   ***     ******  1-014  A    YES  CLOSED  0.0833YES   ANNULUS   1
X014B AS014B 01-184A      YES CLOSED******  *****   ***     ******  1-032  A    YES  CLOSED  0.0833YES   ANNULUS   1
X014C AS014C 01-183A      YES CLOSED******  *****   ***     ******  1-025  B    YES  CLOSED  0.0833YES   ANNULUS   1
X014D AS014D 01-181A      YES CLOSED******  *****   ***     ******  1-007  B    YES  CLOSED  0.0833YES   ANNULUS   1
X015  AS015  62-073A     YES CLOSED******   *****   ***     ******  62-077  B   YES  CLOSED  0.0833YES   ANNULUS   1
X016  MK019  62-543*****   NO ************  *****   ***     ******  ******  *****   ***     ******  2400.00 NO     ANNULUS   0
X017  MK027  63-640*****   NO ************  *****   ***     ******  ******  *****   ***     ******  2400.00 YES    AUX BLDG  1
X018     *****          ******             *****   ***     ******  ******  *****   ***     ******  ******  *****  ***  ****** **********
                                                                                ******** *
X019A ***********     *****                ***     ******  ******  *****     ***     ******  63-072  A  YES   AS IS   2400.00YES
                                                                                CONT.   0
X019B ***********     *****                ***     ******  ******  *****     ***     ******  63-073  B  YES   AS IS   2400.00YES
                                                                                CONT.   0
X020A AS020A 63-633*****   NO ************  *****   ***     ******  ******  *****   ***     ******  2400.00 YES    ANNULUS   1
X020B AS020B 63-632*****   NO ************  *****   ***     ******  ******  *****   ***     ******  2400.00 YES    ANNULUS   1
X021  AS021  63-547*****   NO ************  *****   ***     ******  ******  *****   ***     ******  2400.00 YES    ANNULUS   1
X022  AS022  63-581*****   NO ************  *****   ***     ******  ******  *****   ***     ******  2400.00 YES    ANNULUS   1
revised by amendment 56
X023  MK061  43-319 B    YES CLOSED  43-318B  YES  CLOSED***********  ***     ******  2400.00   NO     *******  0
X024  AS024  68-559*****   NO ************  *****   ***     ******  ******  *****   ***     ******  2400.00 YES    ANNULUS   1
X025A MK044  43-011 B     NO CLOSED  43-012  A NO  CLOSED  ******  *****  ***     ******  0.0833   NO     *******  0
X025B ***********     *****                ***     ******  ******  *****     ***     ******  ******  *****  ***  ****** 2400.00   ***
                                                                                *******  0
X025C ***********     *****                ***     ******  ******  *****     ***     ******  ******  *****  ***  ****** 2400.00   ***
                                                                                *******  0
X025D MK044M 43-002 B     NO CLOSED  43-003  A NO  CLOSED  ******  *****  ***     ******  0.0833   NO     *******  0
X026A MK045M 52-504*****   NO ******  52-500*****  NO  ******  ******  *****  ***     ******  *******  NO     *******  0
X026B MK045M 52-505*****   NO ******  52-501*****  NO  ******  ******  *****  ***     ******  *******  NO     *******  0
X026C ************    *****                ***     ******  ******  *****     ***     ******  ******  *****  ***  ****** 2400.00   ***
                                                                                *******  0
X027A MK046M 43-54D B     NO CLOSED  43-55   A NO  CLOSED  ******  *****  ***     ******  0.0833   ***    *******  0
X027B MK046M 43-56D B     NO CLOSED  43-58   A NO  CLOSED  ******  *****  ***     ******  0.0833   ***    *******  0
X027C MK046M 43-59D B     NO CLOSED  43-61   A NO  CLOSED  ******  *****  ***     ******  0.0833   ***    *******  0
X027D MK046M 43-63D B     NO CLOSED  43-64   A NO  CLOSED  ******  *****  ***     ******  0.0833   ***    *******  0
X028  MK034  43-N0030 *****  NO CLOSED  43-341BYES  CLOSED  ******  *****  ***     ******  2400.00   ***    *******  0
X029  MK050  70-089 B    YES  AS IS******  *****   ***     ******  70-092  A   YES     AS IS    0.0833 NO     *******  0
X030  AS030  63-071A     YES CLOSED******   *****   ***     ******  63-084  B   YES  CLOSED  0.0833YES   ANNULUS   1
X031  MK049  26-1296*****   NO ************  *****   ***     ******  26-243  A    NO  CLOSED  0.0833***     *******  0
```

```
X032  AS032  63-545*****   NO ************   *****   ***   ******   ******   *****   ***   ******   2400.00 YES   ANNULUS   1
X033  AS033  63-553*****   NO ************   *****   ***   ******   ******   *****   ***   ******   2400.00 YES   ANNULUS   1
X034  MK043  32-293*****   NO ******  32-110  AYES  CLOSED   ******   *****   ***   ******   0.0833   NO   ANNULUS   0
X035  MK042******  *****   ***   ******   ******   *****   ***   ******   70-085  B  YES  CLOSED  0.0833NO*******
                                                    0
X036  MK020******  *****   ***   ******   ******   *****   ***   ******   ******   *****   ***   ****** *******   NO
                                                    *******   0
X037  MK014******  *****   ***   ******   ******   *****   ***   ******   ******   *****   ***   ****** *******   NO
                                                    *******   0
X038  MK013******  *****   ***   ******   ******   *****   ***   ******   ******   *****   ***   ****** *******   ***
                                                    ******* *
X039A MK055M 77-868*****   NO ************   *****   ***   ******   63-064  A   YES  CLOSED  0.0833NO   *******   0
X039B MK055M 77-849*****   NO ************   *****   ***   ******   68-305  A   YES  CLOSED  0.0833NO   *******   0
X039C MK055M **************   ******   ******   *****   ***   ******   ******   *****   ***   ******   ********** *******   0
X039D MK055M **************   ******   ******   *****   ***   ******   ******   *****   ***   ******   ********** *******   0
X040A MK009****** *****   ***   ******   ******   *****   ***   ******   3-156  A  YES   OPEN   2400.00NO
                                                    ANNULUS   0
X040B MK011****** *****   ***   ******   ******   *****   ***   ******   3-148  B  YES   OPEN   2400.00NO
                                                    ANNULUS   0
X040C MK010****** *****   ***   ******   ******   *****   ***   ******   ******   *****   ***   ****** *******   ***
                                                    ******* *
X040D MK012****** *****   ***   ******   ******   *****   ***   ******   ******   *****   ***   ****** 2400.00   ***
                                                    *******   0
X041  MK047  77-127 B    YES CLOSED******   *****   ***   ******   77-128  A   YES  CLOSED  0.0833NO   ANNULUS   0
X042  MK039  81-502*****   NO ************   *****   ***   ******   81-012  A   YES  CLOSED  0.0833NO   ANNULUS   0
X043A MK031  62-562*****   NO ************   *****   ***   ******   ******   *****   ***   ******   0.0833  NO   ANNULUS   0
X043B MK029  62-561*****   NO ************   *****   ***   ******   ******   *****   ***   ******   0.0833  NO   ANNULUS   0
X043C MK028  62-563*****   NO ************   *****   ***   ******   ******   *****   ***   ******   0.0833  NO   ANNULUS   0
X043D MK030  62-560*****   NO ************   *****   ***   ******   ******   *****   ***   ******   0.0833  NO   ANNULUS   0
5644  MK037  62-061 B    YES  AS IS******   *****   ***   ******   62-063  A   YES   AS IS   0.0833 NO   ANNULUS   0
X045  AS045  77-018 B    YES CLOSED******   *****   ***   ******   77-019  A   YES  CLOSED  0.0833YES   ANNULUS   1
revised by amendment 56
X046  AS046  77-009 B    YES CLOSED******   *****   ***   ******   77-010  A   YES  CLOSED  0.0833YES   ANNULUS   1
X047A MK025  61-192 B    YES CLOSED******   *****   ***   ******   61-191  A   YES  CLOSED  0.0833YES   ANNULUS   1
X047B MK026  61-194 B    YES CLOSED******   *****   ***   ******   61-193  A   YES  CLOSED  0.0833YES   ANNULUS   1
X048A MK004  72-548*****   NO ************   *****   ***   ******   ******   *****   ***   ******   2400.00 NO   ANNULUS   0
X048B MK003  72-549*****   NO ************   *****   ***   ******   ******   *****   ***   ******   2400.00 NO   ANNULUS   0
X049A MK002  72-562*****   NO ************   *****   ***   ******   ******   *****   ***   ******   2400.00 NO   ANNULUS   0
X049B MK001  72-563*****   NO ************   *****   ***   ******   ******   *****   ***   ******   2400.00 NO   ANNULUS   0
X050A MK016  70-087 B    YES  AS IS******   *****   ***   ******   70-090  A   YES   AS IS   0.0833 NO   *******   0
X050B MK017  70-679*****   NO ************   *****   ***   ******   70-134  B   YES   AS IS   0.0833 NO   *******   0
X051  MK035******  *****   ***   ******   ******   *****   ***   ******   ******   *****   ***   ****** *******   ***
                                                    ******* *
X052  MK040  70-692*****   NO ************   *****   ***   ******   70-140  B   YES   AS IS   0.0833 NO   *******   0
X053  MK041******  *****   ***   ******   ******   *****   ***   ******   70-143  A  YES   AS IS   0.0833NO   *******
                                                    0
X054  MK072******  *****   ***   ******   ******   *****   ***   ******   ******   *****   ***   ****** *******   NO
```

```
                                                                                  ******* 0
X055  MK015****** *****                          ***     ******  ******    *****     ***     ******    ******  *****   ***    ****** *******   ***
                                                                                  ******* *
X056A MK080  67-562D*****   NO ******  67-107B  YES     AS IS   ******    *****     ***     ******     0.0833 NO      *******  0
X056B MK127****** *****                          ***     ******  ******    *****     ***     ******    ******  *****   ***    ****** *******   ***
                                                                                  ******* *
X057A MK081  67-111 B    YES  AS IS   67-112A    YES     AS IS   ******    *****     ***     ******     0.0833 NO      *******  0
X057B MK128****** *****                          ***     ******  ******    *****     ***     ******    ******  *****   ***    ****** *******   ***
                                                                                  ******* *
X058A MK079  67-562A*****   NO ******  67-083  AYES  AS IS   ******  *****     ***     ******     0.0833  NO     *******  0
X058B MK126****** *****                          ***     ******  ******    *****     ***     ******    ******  *****   ***    ****** *******   ***
                                                                                  ******* *
X059A MK078  67-087 A    YES  AS IS   67-088 B   YES     AS IS   ******    *****     ***     ******     0.0833 NO      *******  0
X059B MK125****** *****                          ***     ******  ******    *****     ***     ******    ******  *****   ***    ****** *******   ***
                                                                                  ******* *
X060A MK077  67-562B*****   NO ******  67-099B  YES     AS IS   ******    *****     ***     ******     0.0833 NO      *******  0
X060B MK132****** *****                          ***     ******  ******    *****     ***     ******    ******  *****   ***    ****** *******   ***
                                                                                  ******* *
X061A MK076  67-103 B    YES  AS IS   67-104A    YES     AS IS   ******    *****     ***     ******     0.0833 NO      *******  0
X061B MK131****** *****                          ***     ******  ******    *****     ***     ******    ******  *****   ***    ****** *******   ***
                                                                                  ******* *
X062A MK074  67-562C*****   NO ******  67-091  AYES  AS IS   ******  *****     ***     ******     0.0833  NO     *******  0
X062B MK130****** *****                          ***     ******  ******    *****     ***     ******    ******  *****   ***    ****** *******   ***
                                                                                  ******* *
X063A MK075  67-095 A    YES  AS IS   67-096 B   YES     AS IS   ******    *****     ***     ******     0.0833 NO      *******  0
X063B MK129****** *****                          ***     ******  ******    *****     ***     ******    ******  *****   ***    ****** *******   ***
                                                                                  ******* *
X064  MK092  31-306 A    YES CLOSED  31-305B     YES  CLOSED**********     ***     ******     0.0833  YES    *******  0
X065  MK090  31-308 A    YES CLOSED  31-309B     YES  CLOSED**********     ***     ******     0.0833  YES    *******  0
X066  MK093  31-327  B   YES CLOSED  31-326  AYES  CLOSED  ******  *****  ***     ******     0.0833  YES    *******  0
X067  MK091  31-329  B   YES CLOSED  31-330  AYES  CLOSED  ******  *****  ***     ******     0.0833  YES    *******  0
X068  MK088  67-580D*****   NO ******  67-141B  YES     AS IS   ******    *****     ***     ******     0.0833 NO      *******  0
X069  MK086  67-580A*****   NO ******  67-130  AYES  AS IS   ******  *****     ***     ******     0.0833  NO     *******  0
X070  MK084  67-297  B   YES  AS IS  67-139  AYES  AS IS   ******  *****     ***     ******     0.0833  NO     *******  0
X071  MK082  67-296 A    YES  AS IS  67-134B     YES     AS IS   ******    *****     ***     ******     0.0833 NO      *******  0
X072  MK089  67-298  B   YES  AS IS  67-142  AYES  AS IS   ******  *****     ***     ******     0.0833  NO     *******  0
X073  MK087  67-295 A    YES  AS IS  67-131B     YES     AS IS   ******    *****     ***     ******     0.0833 NO      *******  0
revised by amendment 56
X074    MK085       PLUGMOTORAUTOTRIPPHASE B60.00REM MAN.**************************************NO***
X075  MK083  PLUGMOTORAUTOTRIPPHASE B60.00REM MAN.**************************************NO***
X076  MK097  ************************************ DIAPH MAN. LCL MAN.********************NO***
X077  MK096  ************************************ DIAPH MAN. LCL MAN.********************NO***
X078  MK098  ************************************ GATE  MOTORAUTOTRIPPHASE A 20.00LCL MAN.NO***
X079A MK023  BLDFLMAN.LCL MAN.******************* BLDFL MAN. LCL MAN.*********************NO***
X079B MK024  BLDFLMAN.LCL MAN.******************* BLDFL MAN. LCL MAN.*********************NO***
X080  MK071  BTFLYAIR.AUTOTRIPCONVENT 4.00REM MAN.BTFLY AIR. AUTOTRIPCONTVNET 4.00REM MAN.YES3,7,22
X081  AS081  ************************************ DIAPH AIR. AUTOTRIPPHASE A 10.00REM MAN.NO***
```

```
X082  MK094  ************************************ DIAPH MAN. LCL MAN.******************* NO***
X083  MK095  ************************************ DIAPH MAN. LCL MAN.******************* NO***
X084A MK099M GLOBEAIR  AUTOTRIPPHASE A10.00REM MAN.****************************************NO***
X084B MK101 ***************************************************************  ***************** 32
X084C MK101 ***************************************************************  ***************** 32
X084D MK101 ***************************************************************  ***************** 32
X085A MK100MGLOBEAIR  AUTOTRIPPHASE A 5.00REM MAN.**************************************NO 23
X085B MK100MGLOBEAIR  AUTOTRIPPHASE A10.00REM MAN.**************************************NO 23
X085C ***************************************************************  ***************** 18
X085D MK100M***************************************************************  *******************
X086A MK061 GLOBESOLNDREM MAN******* 5.00LCL MAN.**************************************NO 28
X086B MK033 GLOBESOLNDREM MAN******* 5.00LCL MAN.**************************************NO 28
X086C MK054 GLOBESOLNDREM MAN******* 5.00LCL MAN.**************************************NO 28
X086D MK101M***************************************************************  *******************
X087A MK102 ***************************************************************  *******************
X087B MK102 ***************************************************************  ***************** 32
X087C MK102 ***************************************************************  ***************** 32
X087D MK102 ***************************************************************  ***************** 32
X088  MK103 ***************************************************************  *******************
X089  MK104 ***************************************************************  *******************
X090  MK105 GLOBEAIR  AUTOTRIPPHASE A10.00REM MAN.**************************************YES 11
X091  MK056 GLOBEAIR  AUTOTRIPPHASE A10.00REM MAN.**************************************YES 11
X092A ***** ***************************************************************  *************NO  23
X092B ***** ***************************************************************  *************NO  23
X092C MK034 GLOBESOLNDREM MAN.******* 5.00LCL MAN.**************************************NO ***
X092D ***************************************************************************************NO  28
X093  MK058 GLOBEAIR  AUTOTRIPPHASE A 5.00LCL MAN.**************************************NO ***
X094A MK059M***************************************************************************************
X094B MK059MGLOBEAIR  AUTOTRIPCONTVENT 5.00REM MAN.**************************************NO ***
X094C MK059MGLOBEAIR  AUTOTRIPCONTVENT 5.00REM MAN.**************************************NO ***
X095A MK060M***************************************************************************************
```

```
Penetration
Identif. ---------------ISOLATION VALVE IN ANNULUS---------------   -------------ISOLATION VALVE OUTSIDE SHIELD BUILDING----------
                    PRIMARY            OPER   SECONDARY                PRIMARY            OPER   SECONDARY  OTHER  NOTE FOR MORE
PRIM  SHIELD  VALVE  VALVE   MODE OF   ACTUATING   TIME   MODE OF    VALVE   VALVE    MODE OF   ACTUATING   TIME   MODE OF   ISOL   DATA ON OTHER
CONT  BLDG   TYPE   OPER   ACTUATION   SIGNAL    (SEC)  ACTUATION   TYPE   OPER    ACTUATION   SIGNAL    (SEC)  ACTUATION  VALVES   VALVES

X095B  MK060M    GLOBEAIR AUTOTRIPCONTVENT 5.00REM MAN.**************************************NO***
X095CMK060M GLOBEAIR AUTOTRIP   CONTVENT   5.00   REM MAN.  ***********  *******   ********   *****       ********  NO     ***
X096A****** *****************  *******                                  *****     *******   ******     ****        ********   ********    *****    ********  **      18
X096BMK106M GLOBEMAN. LCL MAN.  *******                                 *****     *******   ******     ****        ********   ********    *****    ********  NO     ***
X096CMK106M GLOBEMAN. LCL MAN.  *******                                 *****     *******   ******     ****        ********   ********    *****    ********  NO     ***
X097 ****** SOLNDAIR AUTOTRIP   PHASE A    5.00   REM MAN.  ******  ****      ********  ********   *****       ********  NO     ***
X098 MK108  *****************  *******                                  *****     *******   ******     ****        ********   ********    *****    ********  ***     ***
X099 ****** *****************  *******                                  *****     *******   ******     ****        ********   ********    *****    ********  YES     23
X100 ****** *****************  *******                                  *****     *******   ******     ****        ********   ********    *****    ********  YES     23
X101 MK054  *****************  *******                                  *****     *******   ******     ****        ********   *******     *****    *******   ***     ***
X102 ****** *****************  *******                                  *****     *******   ******     ****        ********   *******     *****    *******   ***     ***
X103    *****         ************************************                          ********************************************
X104    *****         ************************************                          ********************************************
X105  MK033 GLODESOLNDREM MAN.******* 5.00LCL MAN.**************************************NO  28
X106  MK048 GLOBESOLNDREM MAN.******* 5.00LCL MAN.**************************************NO  28
X107  MK038 ************************************************************          *************YES 20
X108  AS108 ************************************** BLDFL  MANLCL MAN**************************
X109  AS109 ************************************** BLDFL  MANLCL MAN **************************
X110  MK032 ************************************************************          *******************
X111    *****         ************************************                          ********************************************
X112    *****         ************************************                          ********************************************
X113    *****         ************************************                          ********************************************
X114  MK110 ************************************** DIAPH AIR  AUTOTRIPPHASE A 30.00REM MAN.YES  9
X115  MK111 ************************************** DIAPH AIR  AUTOTRIPPHASE A 30.00REM MAN.YES  9
X116  MK007 ************************************************************          *******************
X117  MK008 BLDFLMAN. LCL MAN.********************************************* *************NO ***
X118  MK018 BLDFLMAN. LCL MAN.********************************************* *************NO ***
X119    *****         ************************************                          ********************************************
X120    *****         ************************************                          ********************************************
```

```
Penetration     ------------------------------ISOLATION VALVE DATA------------------------------        ACCIDENT   -----PENETRATION DETAILS-----
Identif.        ---IN PRIMARY CONTAINMENT---                                                  OPERATIONAL   INSUL-    FLUED    NO. OF
PRIM   SHIELD   VAIVE   ESF   POS  FAIL    VAIVE   ESF   POS  FAIL  VAIVE   ESF   POS  FAIL   REQUIREMENT  ATION    HEAD    ANNULUS
CONT   BLDG     NO.     TRAIN IND  POS.    NO.     TRAIN IND  POS.  NO.     TRAIN IND  POS.     (HR)      USED     LOCARION  BELLOWS

X074  MK085  67-580B*****   NO ******  67-138B                      YES     AS IS   ******   *****    ***     ******    0.0833 NO     *******   0
X075  MK083  67-580C*****   NO ******  67-133 AYES                  AS IS   ******   *****    ***     ******    0.0833   NO    *******  0
X076  MK097  33-714*****   NO ************                          *****   ***     ******   33-713   *****  NO ******   *******  NO     *******   0
X077  MK096  56-698*****   NO ************                          *****   ***     ******   59-522   *****  NO ******   *******  NO     ANNULUS   0
X078  MK098  26-1260*****   NO ************                         *****   ***     ******   26-240 A  NO     AS IS    0.0833 ***     *******   0
X079A MK023****** *****                                             ***     ******  ******   *****    ***     ******   ******  *****  ***   ******  *******   NO
                                                                                        *******  0
X079B MK024****** *****                                             ***     ******  ******   *****    ***     ******   ******  *****  ***   ******  *******   NO
                                                                                        *******  0
X080  MK071  30-040  B   YES CLOSED  30-037B                        YES  CLOSED30-061  AYES  CLOSED  0.0833NO  *******  0
X081  AS081  77-016  B   YES CLOSED******                           *****   ***     ******   77-017 A  YES  CLOSED  0.0833NO    ANNULUS   1
X082  MK094  78-560*****   NO  AS IS******                          *****   ***     ******   78-561   *****  NO AS IS   *******  NO     ANNULUS   0
X083  MK095  78-558*****   NO  AS IS******                          *****   ***     ******   78-557   *****  NO AS IS   *******  NO     ANNULUS   0
X084A MK099M 68-308  B   YES CLOSED  68-307 AYES  CLOSED            ******  *****   ***     ******    0.0833   NO     *******  0
X084B MK101****** *****                                             ***     ******  ******   *****    ***     ******   ******  *****  ***   ******  2400.00   NO
                                                                                        *******  0
X084C MK101****** *****                                             ***     ******  ******   *****    ***     ******   ******  *****  ***   ******  2400.00   NO
                                                                                        *******  0
X084D MK101****** *****                                             ***     ******  ******   *****    ***     ******   ******  *****  ***   ******  2400.00   NO
                                                                                        *******  0
X085A MK100M 43-075  B    NO CLOSED  43-077 A NO  CLOSED            ******  *****   ***     ******    0.0833   NO     *******  0
X085B MK100M 43-022  B    NO CLOSED  43-023 A NO  CLOSED            ******  *****   ***     ******    0.0833   NO     *******  0
X085C ************   *****                                          ***     ******  ******   *****    ***     ******   ******  *****  ***   ******  2400.00    ***
                                                                                        *******  0
X085D MK100M **************                                         ******  ******  *****    ***     ******   ******  *****  ***   ******  **********  *******  *
X086A MK061  43-288  A   YES CLOSED  43-287 AYES  CLOSED            ******  *****   ***     ******    2400.00  NO     *******  0
X086B MK033  43-N0001*****   NO ******  43-307    AYES  CLOSED****** *****   ***     ******    2400.00  NO     *******  0
X086C MK054  43-N00026****   NO ******  43-342    AYES  CLOSED****** *****   ***     ******    2400.00  NO     *******  0
X086D MK101M **************                                         ******  ******  *****    ***     ******   ******  *****  ***   ******  **********  *******  *
X087A MK102****** *****                                             ***     ******  ******   *****    YES  CLOSED******  *****  ***   ******  **********  *******  *
X087B MK102****** *****                                             ***     ******  ******   *****    ***     ******   ******  *****  ***   ******  2400.00   NO
                                                                                        *******  0
X087C MK102****** *****                                             ***     ******  ******   *****    ***     ******   ******  *****  ***   ******  2400.00   NO
                                                                                        *******  0
X087D MK102****** *****                                             ***     ******  ******   *****    ***     ******   ******  *****  ***   ******  2400.00   NO
                                                                                        *******  0
X088  MK103******  *****                                            ***     ******  ******   *****    ***     ******   ******  *****  ***   ******  *******    ***
                                                                                        *******  *
X089  MK104******  *****                                            ***     ******  ******   *****    ***     ******   ******  *****  ***   ******  *******    ***
                                                                                        *******  *
X090  MK105  32-313*****   NO ******  32-102B                       YES  CLOSED**********   ***     ******    0.0833   NO     ANNULUS   0
```

```
X091  MK056  32-303*****   NO ******  32-80  AYES  CLOSED          ******     *****     ***        ******        0.0833   NO          *******   0
X092A *****  43-207  B    YES   OPEN******                         *****      ***       ******     ******        *****    ***         ******    2400.00 NO      *******   0
X092B *****  43-208  B    YES   OPEN******                         *****      ***       ******     ******        *****    ***         ******    2400.00 NO      *******   0
X092C MK034  43-251*****  YES CLOSED  43-250*****                 YES  CLOSED***********      ***        ******        2400.00   NO          *******   0
X092D ***********     *****                                       ***        ******    ******     *****         ***      ***         ******    *******       ***
                                                                                        *******  *
X093  MK058  43-034  B     NO CLOSED  43-035 A NO  CLOSED          ******     *****     ***        ******        0.0833   NO          *******   0
X094A MK059M **************                                        ******     ******    *          ***         ******    ************  *****    ***        ******        ****** **********
                                                                                        *
X094B MK059M 90-110  B    YES CLOSED  90-111 AYES  CLOSED         ******     *****     ***        ******        0.0833   NO          *******   0
X094C MK059M 90-108/109  B    YES CLOSED  90-107 AYES  CLOSED     ******     *****     ***        ******        0.0833   NO          *******   0
X095A MK060M ****** ********                                       ******     ******    *          ***         ******    ************  *****    ***        ******        ****** **********
                                                                                        *
WBNP-65
X095BMK060M 90-116 B  YESCLOSED 90-117AYES CLOSED***********      ***        ******0.0833NO*******   0
X095CMK060M 90-114/115 B   YESCLOSED 90-113AYES CLOSED*********************0.0833NO*******   0
X096A ************    *****                                       ***        ******    ***************************  *****        ***          *************NO*******   0
X096B MK106M 52-507***** NO******  52-503*****NO                   *****************    ***        *************NO*******   0
X096C MK106M 52-506***** NO******  52-502*****NO                   *****************    ***        *************NO*******   0
X097    ****** 30-134*****                                         ***        ******  30-135***************************      *************NOANNULUS   0
X098    ******        ******                                       *****      ***       ******     ***************************  *****        ***       *************NOANNULUS   0
X099    ****** 43-202 A    YES OPEN                                ******************************   ***            ******2400.00NO*******   0
X100    ****** 43-201 A    YES OPEN                                ******************************   ***            ******2400.00NO*******   0
X101  MK054******  *****                                           ***        ******    ***************************  *****        ***          ************************ *
X102    ******        ******                                       *****      ***       ******     ***************************  *****        ***       ************************ *
X103    ******        ******                                       *****      ***       ******     ***************************  *****        ***       ************************ *
X104    ******        ******                                       *****      ***       ******     ***************************  *****        ***       ************************ *
X105  MK033  43-N0002***** NO******  43-325B    YES CLOSED******   *****      ***       ******2400.00NO*******   0
X106  MK048  43-310 B    YES CLOSED  43-309B    YES CLOSED********** ***      ******2400.00NO*******   0
X107  MK038  74-002 B    YES AS IS *************                   *****************    ***        ******2400.00YES*******   1
X108  AS108******   *****                                          ***        ******    ***************************  *****        ***          ****************ANNULUS   1
X109  AS109******   *****                                          ***        ******    ***************************  *****        ***          ****************ANNULUS   1
X110  MK032******  *****                                           ***        ******    ***************************  *****        ***          ************************ *
X111    ******        ******                                       *****      ***       ******     ***************************  *****        ***       ************************ *
X112    ******        ******                                       *****      ***       ******     ***************************  *****        ***       ************************ *
X113    ******        ******                                       *****      ***       ******     ***************************  *****        ***       ************************ *
X114  MK110  61-122 B    YES CLOSED**************                  ******61-110 A     YES CLOSED0.0833 YESAUX BLDG  0
X115  MK111  61-097   B    YES  CLOSED**************               ******61-096 A     YES CLOSED0.0833 YESAUX BLDG  0
X116  MK007******  *****                                           ***        ******    ***************************  *****        ***          ************************
X117  MK008******  *****                                           ***        ******    ***************************  *****        ***          *************NO *******   0
X118  MK018******  *****                                           ***        ******    ***************************  *****        ***          *************NO********   0
X119    *****         ******                                       *****      ***       ******     ***************************  *****        ***       ************************ *
X120    *****         ******                                       ***** YES ****************************************        ************************ *
X095B MK060M 90-109  B    YES CLOSED  90-107  AYES  CLOSED        ******     *****     ***        ******        0.0833   NO          *******   0
X090C MK060M 90-110  B    YES CLOSED  90-111  AYES  CLOSED        ******     *****     ***        ******        0.0833   NO          *******   0
X096A ************    *****                                       ***        ******    ******     *****         ***      ***         ******    *******       NO
                                                                                        *******   0
```

```
X096B MK106M 52-507*****   NO ******  52-503*****                NO      ******   ******      *****       ***        ******        *******  NO       *******   0
X096C MK106M 52-506*****   NO ******  52-502*****                NO      ******   ******      *****       ***        ******        *******  NO       *******   0
X097    ****** 30-134*****                                        ***     ******  30-135*****  ***         ******     ******      *****    ***      ******   *******NO
                                                                                   ANNULUS   0
X098    ******        ******                                      *****   ***      ******     ******      *****      ***        ******   ******   *****    ***  ******    *******
                                                                                   NO ANNULUS   0
X099    ****** 43-202 A    YES   OPEN                            ******  *****    ***        ******      ******     *****      ***      ******    2400.00NO *******   0
X100    ****** 43-201 A    YES   OPEN                            ******  *****    ***        ******      ******     *****      ***      ******    2400.00NO *******   0
X101  MK054******  *****                                         ***     ******   ******     *****       ***        ******     ******   *****    ***      ****** *******      ***
                                                                                   ******* *
X102    *****         ******                                      *****   ***      ******     ******      *****      ***        ******   ******   *****    ***  ****** **********
                                                                                   ******* *
X103    *****         ******                                      *****   ***      ******     ******      *****      ***        ******   ******   *****    ***  ****** **********
                                                                                   ******* *
X104    *****         ******                                      *****   ***      ******     ******      *****      ***        ******   ******   *****    ***  ****** **********
                                                                                   ******* *
X105  MK033  43-N0002 *****   NO ******  43-325BYES  CLOSED       ******  *****    ***        ******       2400.00   NO         *******  0
X106  MK048  43-310  B    YES CLOSED  43-309B                     YES  CLOSED**********      ***         ******       2400.00   NO       *******  0
X107  MK038  74-002  B    YES  AS IS******                        *****   ***      ******     ******      *****      ***        ******   2400.00 YES     *******   1
X108  AS108  87-562*****   NO ************                        *****   ***      ******     ******      *****      ***        ******     0.50   NO      ANNULUS   1
X109  AS109  87-563*****   NO ************                        *****   ***      ******     ******      *****      ***        ******     0.50   NO      ANNULUS   1
X110  MK032  87-7 A    YES CLOSED******                          *****   ***      ******     87-9    B    YES  CLOSED  0.0833NO     *******  0
X111    *****         ******                                      *****   ***      ******     ******      *****      ***        ******   ******   *****    ***  ****** **********
                                                                                   ******* *
X112    *****         ******                                      *****   ***      ******     ******      *****      ***        ******   ******   *****    ***  ****** **********
                                                                                   ******* *
X113    *****         ******                                      *****   ***      ******     ******      *****      ***        ******   ******   *****    ***  ****** **********
                                                                                   ******* *
X114  MK110  61-122  B    YES CLOSED******                        *****   ***      ******     61-110  A    YES  CLOSED  0.0833YES    AUX BLDG  0
X115  MK111  61-097  B    YES CLOSED******                        *****   ***      ******     61-096  A    YES  CLOSED  0.0833YES    AUX BLDG  0
X116  MK007******  *****                                         ***     ******   ******     *****       ***        ******     ******   *****    ***      ****** *******      ***
                                                                                   ******* *
X117  MK008******  *****                                         ***     ******   ******     *****       ***        ******     ******   *****    ***      ****** *******      NO
                                                                                   *******   0
X118  MK018******  *****                                         ***     ******   ******     *****       ***        ******     ******   *****    ***      ****** *******      NO
                                                                                   *******   0
X119    *****         ******                                      *****   ***      ******     ******      *****      ***        ******   ******   *****    ***  ****** **********
                                                                                   ******* *
X120    *****         ******                                      *****   ***      ******     ******      *****      ***        ******   ******   *****    ***  ****** **********
                                                                                   ******* *

revised by amendment 56
X095B   MK060M 90-109B   YESCLOSED 90-107AYES CLOSED******        *****   ***      ******0.0833NO*******   0
X095CMK060M 90-110B   YESCLOSED 90-111AYES CLOSED**********      ***     ******0.0833NO*******   0
X096A ************   *****                                       ***     ******   ************************ *****      ***        *************NO*******   0
X096B MK106M 52-507***** NO******  52-503*****NO                 ****************   ***        *************NO*******   0
X096C MK106M 52-506***** NO******  52-502*****NO                 ****************   ***        *************NO*******   0
X097    ****** 30-134*****                                        ***     ******  30-135***************************     *************NOANNULUS   0
```

```
X098    ******        ******                                          *****      ***      ******      ************************** *****        ***      *************NOANNULUS   0
X099    ****** 43-202A    YES OPEN                                   ******************************** ***           ******2400.00NO*******   0
X100    ****** 43-201A    YES OPEN                                   ******************************** ***           ******2400.00NO*******   0
X101  MK054******  *****                                             ***        ******   ************************* *****        ***          ********************** *
X102    ******        ******                                          *****      ***      ******      ************************** *****        ***      ********************** *
X103    ******        ******                                          *****      ***      ******      ************************** *****        ***      ********************** *
X104    ******        ******                                          *****      ***      ******      ************************** *****        ***      ********************** *
X105  MK033  43-N0002        ***** NO******  43-325B    YES CLOSED****** *****      ***      ******2400.00NO*******   0
X106  MK048  43-310B    YES CLOSED  43-309B    YES CLOSED********** ***        ******2400.00NO*******   0
X107  MK038  74-002B    YES AS IS ********                           ***        ****************     ***           ******2400.00YES*******   1
X108  AS108******  *****                                             ***        ******   *********   ***           ************ *****        ***      ***************ANNULUS   1
X109  AS109******  *****                                             ***        ******   *********   ***           ************ *****        ***      ***************ANNULUS   1
X110  MK032******  *****                                             ***        ******   ************************** *****        ***          ********************** *
X111    ******        ******                                          *****      ***      ******      ************************** *****        ***      ********************** *
X112    ******        ******                                          *****      ***      ******      ************************** *****        ***      ********************** *
X113    ******        ******                                          *****      ***      ******      ************************** *****        ***      ********************** *
X114  MK110  61-122B    YES CLOSED*************                      ******61-110 A    YES CLOSED0.0833 YESAUX BLDG  0
X115  MK111  61-097B    YES  CLOSED*************                     ******61-096 A    YES CLOSED0.0833 YESAUX BLDG  0
X116  MK007******  *****                                             ***        ******   ************************** *****        ***          ***********************
X117  MK008******  *****                                             ***        ******   ************************** *****        ***          *************NO *******   0
X118  MK018******  *****                                             ***        ******   ************************** *****        ***          *************NO********   0
X119    *****         ******                                          *****      ***      ******      ************************** *****        ***      ********************** *
X120    *****         ******                                          ***** YES ***************************************        ********************** *
```

```
                                TVA      POSSI-   APPENDIX
                     PROCESS    TVA      CONT     BLE      J TYPE C  IN PRIM      IN       OUTSIDE
PRIM   SHIELD        PROCESS    FLUID    PENE     ISOL     LEAK      TEST       CONT     ANNULUS    SHIELD BLDG.
CONT   BLDG.         FLUID      STATE    TYPE     CLASS    PATHS     FLUID      (PIPE DIA)  (PIPE DIA)  (PIPE DIA)

X074 MK085WATERCOLD      21       I       AB DE    AIR      978.0       84.0    *****
X075 MK083WATERCOLD      21       I       AB DE    AIR      624.0       48.0    *****
X076 MK097   AIR  COLD      21       I       A  D     AIR       34.0    ******      137.0
X077MK096   WATERCOLD      21       I       A  D     AIR       35.0    ******      145.0
X078 MK098    WATERCOLD    **       *       AB D     AIR                         ******      ******    *****
X079AMK023   ICE  COLD      18       I       AB       *****     1.0     ******      17.0
X079BMK024   ICE  COLD      18       I       AB       *****     1.0     ******      17.0
X080 MK071   AIR  COLD      13       I       ABC E    AIR       0.5         0.8     *****
X081 AS081   AIR  COLD      4        I       A  D     AIR       0.0     ******      0.0
X082 MK094   WATERCOLD      7        I       AB D     AIR       0.0     ******      17.2
X083 MK095   WATERCOLD      7        I       AB D     AIR       0.0     ******      22.8
X084AMK099M  N2   COLD      10       I       AB D     AIR       0.0         0.0     *****
X084BMK101   WATERCOLD      10       *       B D      *****                         ******      ******    *****
X084CMK101   WATERCOLD      10       *       B D      *****                         ******      ******    *****
X084DMK101   WATERCOLD      10       *       B D      *****                         ******      ******    *****
X085AMK100M  WATERHOT       10       I       AB D     AIR       0.0         0.0     *****
X085BMK100M  WATERHOT       10       I       AB D     AIR       0.0         0.0     *****
X085C******  AIR  COLD      10       *       B        *****                         ******      ******    *****
X085DMK100M*********        10       *                                              *****       *****     ******      ******      *****
```

X086AMK061	AIR	COLD	10	IV	AB D	AIR	******	******	*****								
X086BMK033	AIR	COLD	10	IV	AB D	AIR	******	******	*****								
X086CMK054	WATERCOLD	10	IV	AB D	AIR	******	******	*****									
X086DMK101M	*********	10	*						*****	*****	******	******	*****				
X087AMK102	*********	10	*						*****	*****	******	******	*****				
X087BMK102	WATERCOLD	10	*	B D	AIR	******			******	*****							
X087CMK102	WATERCOLD	10	*	B D	AIR	******			******	*****							
X087DMK102	WATERCOLD	10	*	B D	AIR	******			******	*****							
X088 MK103	*********	**							*	*****	*****	******	******	*****			
X089 MK104	*********	**							*	*****	*****	******	******	*****			
X090 MK105	AIR	COLD	6	I	AB D	AIR	0.0	0.0	*****								
X091 MK056	AIR	COLD	6	I	AB D	AIR	0.0	0.0	*****								
X092A*****	AIR	COLD	10	IV	B	AIR	******	******	*****								
X092B*****	AIR	COLD	10	IV	B	AIR	******	******	*****								
X092CMK034	WATERHOT	10	IV	AB D	AIR	******	******	*****									
X092D*****	*********	10	*						*****	*****	******	******	*****				
X093 MK058	WATERCOLD	10	I	AB D	AIR	0.0	0.0	*****									
X094AMK059M	*********	**							*	*****	*****	******	******	*****			
X094BMK059M	AIR	COLD	10	I	AB D	AIR	0.0	0.0	*****								
X094CMK059M	AIR	COLD	10	I	AB D	AIR	0.0	0.0	*****								
X095AMK060M	*********	**							*	*****	*****	******	******	*****			
X095B	MK060M	AIR							COLD	10	I AB D	AIR	0.0	0.0	*****		
X095C	MK060M	AIR							COLD	10	I	AB D	AIR	0.0	0.0	*****	
X096A	*****	AIR							COLD	10	*	B	*****	*****	*****	*****	
X096B	MK106M	AIR							COLD	10	I	B	AIR	16.0	29.0	*****	
X096C	MK106M	AIR							COLD	10	I	B	AIR	16.0	29.0	*****	
X097	*****	AIR							COLD	6 II	B	AIR	*****	*****	*****		
X098	MK108	*****							****	6	*	****	*****	*****	*****	*****	
X099	*****	AIR							COLD	6	IV	B	AIR	*****	*****	*****	
X100	*****	AIR							****	10	*	B	******	*****	*****	*****	
X101	MK054	*****							****	**	*	****	*****	*****	*****	*****	
X102	*****	*****							****	**	*	****	*****	*****	*****	*****	
X103	*****	*****							****	**	*	****	*****	*****	*****	*****	
X104	*****	*****							****	**	*	****	*****	*****	*****	*****	
X105	MK033	AIR							COLD	10	IV	AB D	AIR	*****	*****	*****	
X106	MK048	WATER							HOT	10	IV	AB D	AIR	*****	*****	*****	
X107	MK038	WATER							HOT	3	IV	AB D	****	91.0	*****	*****	
X108	AS108	AIR							COLD	17	I	B D	AIR	*****	*****	*****	
X109	AS109	AIR							COLD	17	I	B D	AIR	*****	*****	*****	
X110	MK032	*****							****	**	*	****	*****	*****	*****	*****	
X111	*****	****							****	**	*	****	*****	*****	*****	*****	
X112	*****	****							****	**	*	****	*****	*****	*****	*****	
X113	*****	****							****	**	*	****	*****	*****	*****	*****	
X114	MK110	GLYCOL							COLD	23	I	AB D	AIR	51.0	*****	56.0	
X115	MK111	GLYCOL							COLD	23	I	AB D	AIR	51.0	*****	56.0	
X116	MK007	****							****	**	*	****	****	*****	*****	*****	
X117	MK008	AIR							COLD	18	I	BC	****	*****	*****	*****	

X118	MK018	WATER	COLD	18	I	ABC	******	*****	0.0	0.0
X119	*****	*****	****	**	*	****	*****	*****	*****	*****
X120	*****	*****	****	**	*	****	*****	*****	*****	*****

PENETRATION IDENTIFICATION PRIM. CONT.	SHIELD BLDG.	SYSTEM NO(S).	CONTAINMENT ISOLATION VALVE ARRANGE. FIGURE NO.	ESSENTIAL NONESSEN	TVA ORDRAWING
X001	******	**	********	N	49N250
X002A	******	**	********	N	49N240
X002B	******	**	********	N	49N240
X003	MK062	**	********	N	45W455-1
X004	F005	30	6.2.4-22	WN	47W866-1
X005	F005	30	6.2.4-22	WN	47W866-1
X006	F005	30	6.2.4-22	WN	47W866-1
X007	F005	30	6.2.4-22	WN	47W866-1
X008	******	**	********	*	********
X008A	MK112	3	6.2.4-22	FFN	47W803-1,2
X008B	MK113	3	6.2.4-22	FFN	47W803-1,2
X008C	MK114	3	6.2.4-22	FFN	47W803-1,2
X008D	MK115	3	6.2.4-22	FFN	47W803-1,2
X009A	F002	30	6.2.4-22	WN	47W866-1
X009B	F002	30	6.2.4-22	WN	47W866-1
X010A	F002	30	6.2.4-22	WN	47W866-1
X010B	F002	30	6.2.4-22	WN	47W866-1
X011	F002	30	6.2.4-22	WN	47W866-1
X012A	MK067	3	6.2.4-22	I N	47W803-1,2
X012B	MK068	3	6.2.4-22	I N	47W803-1,2
X012C	MK069	3	6.2.4-22	I N	47W803-1,2
X012D	MK070	3	6.2.4-22	I N	47W803-1,2
X013A	MK063	1	6.2.4-22	FN	47W801-1, 47W803-2
X013B	MK064	1	6.2.4-22	FN	47W801-1
X013C	MK065	1	6.2.4-22	FN	47W801-1
X013D	MK066	1	6.2.4-22	FN	47W801-1, 47W803-2
X014A	AS014A	1	6.2.4-22	EN	47W801-2
X014B	AS014B	1	6.2.4-22	EN	47W801-2
X014C	AS014C	1	6.2.4-22	EN	47W801-2
X014D	AS014D	1	6.2.4-22	EN	47W801-2
X015	AS015	62	6.2.4-22	KN	47W809-1
4516	MK019	62	6.2.4-22	KN	47W809-1
X017	MK027	63/74	6.2.4-22	PE	47W811-1
X018	******	**	*********	*	********
X019A	******	63	6.2.4-22	EE	47W811-1
X019B	******	63	6.2.4-22	EE	47W811-1
X020A	AS020A	74/63	6.2.4-22	BBE	47W811-1
X020B	AS020B	74/63	6.2.4-22	BBE	47W811-1
X021	AS021	63	6.2.4-22	J E	47W811-1
X022	AS022	63	6.2.4-22	QE	47W811-1

X023	MK061	43			6.2.4-22HHE	47W625-15	
X024	AS024	68/63/79	6.2.4-220	E	47W813-1		
X025A	MK044M	43	6.2.4-22AA	N	47W625-1		
X025B	******	30	6.2.4-22CC	E		47W600-89	
X025C	******	30	6.2.4-22CC	E		47W600-89	
X025D	MK044M	43	6.2.4-22AA	N	47W625-1		
X026A	MK045M	52	6.2.4-22R	N	47W331-3		
X026B	MK045M	52	6.2.4-22R	N	47W331-3		
X026C	******	30	6.2.4-22CC	E		47W600-89	
X027A	MK046M	43	6.2.4-22W	N	47W625-2		
X027B	MK046M	43	6.2.4-22W	N	47W625-2		
X027C	MK046M	43	6.2.4-22W	N	47W625-2		
X027D	MK046M	43	6.2.4-22W	N	47W625-2		
X028	MK034	43	6.2.4-22GG	E	47W625-15		
X029	MK050	80/79/70	6.2.4-22X	N	47W859-3		
X030	AS030	63	6.2.4-22J	N	47W811-1		
X031	MK049	26	6.2.4-22C	N	47W850-9		
X032	AS032	63	6.2.4-22P	E	47W811-1		
X033	AS033	63	6.2.4-22Q	E	47W811-1		
X034	MK043	32	6.2.4-22I	N	47W848-1		
revised by amendment 52							
X047B	MK026	61	6.2.4-22S	N	47W814-2		
X048A	MK004	72	6.2.4-22F	E	47W812-1		
X048B	MK003	72	6.2.4-22F	E	47W812-1		
X049A	MK002	72	6.2.4-22F	E	47W812-1		
X049B	MK001	72	6.2.4-22F	E	47W812-1		
X050A	MK016	70	6.2.4-22S	N	47W859-3		
X050B	MK017	70	6.2.4-22C	N	47W859-3		
X051	MK035	**	*********		*		********
X052	MK040	70	6.2.4-22T	N	47W859-3		
X053	MK041	70	6.2.4-22C	N	47W859-3		
X054	MK072	**	6.2.4-22EE	N		72-4333-315	
X055	MK015	**	*********		*		*********
X056A	MK080	67	6.2.4-22G	N	47W845-3		
X056B	MK127	**	*********		*		********
X057A	MK081	67	6.2.4-22G	N	47W845-3		
X057B	MK128	**	*********		*		********
X058A	MK079	67	6.2.4-22G	N	47W845-3		
X058B	MK126	**	*********		*		********
X059A	MK078	67	6.2.4-22G	N	47W845-3		
X059B	MK125	**	*********		*		********
X060A	MK077	67	6.2.4-22G	N	47W845-3		
X060B	MK132	**	*********		*		********
X061A	MK076	67	6.2.4-22G	N	47W845-3		
X061B	MK131	**	*********		*		********
X062A	MK074	67	6.2.4-22G	N	47W845-3		
X062B	MK130	**	*********		*		********

X063A	MK075	67	6.2.4-22G	N	47W845-3	
X063B	MK129	**	*********		*	********
X064	MK092	31	6.2.4-22V	N	47W865-5	
X065	MK090	31	6.2.4-22V	N	47W865-5	
X066	MK093	31	6.2.4-22V	N	47W865-5	
X067	MK091	31	6.2.4-22V	N	47W865-5	
X068	MK088	67	6.2.4-22H	N	47W845-3	
X069	MK086	67	6.2.4-22H	N	47W845-3	
X070	MK084	67	6.2.4-22H	N	47W845-3	
X071	MK082	67	6.2.4-22H	N	47W845-3	
X072	MK089	67	6.2.4-22H	N	47W845-3	
X073	MK087	67	6.2.4-22H	N	47W845-3	
X074	MK085	67	6.2.4-22H	N	47W845-3	

revised by amendment 52

PENETRATION IDENTIFICATION PRIM. CONT.	SHIELD BLDG.	CONTAINMENT ISOLATION SYSTEM NO(S).	VALVE FIGURE NO.	ESSENTIALTVA ARRANGE. NONESSENTIAL	OR	DRAWING NO(S).
X075	MK083	67	6.2.4-22H	N	47W845-3	
X076	MK097	33	6.2.4-22D	N	47W846-2	
X077	MK096	59	6.2.4-22U	N	47W856-1	
X078	MK098	26	6.2.4-22C	N	47W850-9	
X079A	MK023	61	6.2.4-22BB,23	N	47W814-1	
X079B	MK024	61	6.2.4-22BB,23	N	47W814-1	
X080	MK071	30	6.2.4-22W	N	47W866-1	
X081	AS081	77	6.2.4-22L	N	47W830-1	
X082	MK094	78	6.2.4-22T	N	47W855-1	
X083	MK095	78	6.2.4-22T	N	47W855-1	
X084A	MK099M	43	6.2.4-22AA	N	47W625-8	
X084B	******	30	6.2.4-22II	E	47W600-89	
X084C	MK101	68	6.2.4-22II	E	47W600-292	
X084D	MK101	68	6.2.4-22II	E	47W600-292	
X085A	MK100M	43	6.2.4-22BB	N	47W625-7	
X085B	MK100M	43	6.2.4-22AA	N	47W625-1	
X085C	******	30	6.2.4-22CC	E	47W600-89	
X085D	MK100M	**	**********		*	*********
X086A	MK061	43	6.2.4-22HH	E	47W625-15	
X086B	MK033	43	6.2.4-22HH	E	47W625-15	
X086C	MK054	43	6.2.4-22GG	E	47W625-15	
X086D	MK100M	**	**********		*	*********
X087A	MK102	**	**********		*	*********
X087B	MK102	68	6.2.4-22II	E	47W600-292	
X087C	MK102	68	6.2.4-22II	E	47W600-292	
X087D	MK102	68	6.2.4-22II	E	47W600-292	
X088	MK103	**	**********		*	*********
X089	MK104	**	**********		*	*********

X090	MK105	32	6.2.4-22I	N	47W848-1				
X091	MK056	32	6.2.4-22I	N	47W848-1				
X092A	******	43	6.2.4-22DD	E		47W625-11			
X092B	******	43	6.2.4-22DD	E		47W625-11			
X092C	MK034	43	6.2.4-22GG	E	47W625-15				
X092D	******	**			**********	*			*********
X093	MK058	43	6.2.4-22CC	N	47W625-2				
X094A	MK059M	**	*********			*		**********	
X094B	MK059M	90	6.2.4-220	N	47W600-105				
X094C	MK059M	90	6.2.4-220	N	47W600-105				
X095A	MK060M	**	*********			*		**********	
X095B	MK060M	90	6.2.4-220	N	47W600-105				

PENETRATION		CONTAINMENT							
IDENTIFICATION		ISOLATION	ESSENTIALTVA						
PRIM.	SHIELD	SYSTEM	VALVE ARRANGE.	OR	DRAWING				
CONT.	BLDG.	NO(S).	FIGURE NO.	NONESSENTIAL	NO(S).				
X095C	MK060M	90	6.2.4-220	N	47W600-105				
X096A	******	30	6.2.4-22CC	E		47W600-89			
X096B	MK106M	52	6.2.4-22R	N	47W331-3				
X096C	MK106M	52	6.2.4-22R	N	47W331-3				
X097	******	30	6.2.4-22EE	N		47W866-1			
X098	MK108	**	*********			*		*********	
X099	******	43	6.2.4-22DD	E		47W625-11			
X100	******	43	6.2.4-22DD	E		47W625-11			
X101	MK054	**	**********			*		*********	
X102	******	**			*********	*			*********
X103	******	**			*********	*			*********
X104	******	**			*********	*			*********
X105	MK033	43	6.2.4-22HH	E	47W625-15				
X106	MK048	43	6.2.4-22GG	E	47W625-15				
X107	MK038	74	6.2.4-22X	E	47W810-1				
X108	AS108	**	6.2.4-22FF	N		47W311-1			
X109	AS109	**	6.2.4-22FF	N		47W311-1			
X110	MK032	**	*********			*		*********	
X111	******	**			*********	*			*********
X112	******	**			*********	*			*********
X113	******	**			*********	*			*********
X114	MK110	61	6.2.4-22Y	N	47W814-2				
X115	MK111	61	6.2.4-22Y	N	47W814-2				
X116	MK007	**	*********			*		*********	
X117	MK008	**	6.2.4-22FF	N		47W301-1			
X118	MK018	41	6.2.4-22EE	N	72-4333-318				
X119	******	**			*********	*			*********
X120	******	**			*********	*			*********

1. A series of astericks are printed in data spaces that do not apply to the penetration being described.
2. An M at the end of a containment or shield building penetration number indicates the penetration has more than one line going through it.
3. Piping systems isolated by a 'CONTVENT' signal are also isolated by a phase A signal.
4. The piping outside the shield building is jointed by a sampling line. This line is isolated by an air operated gate valve with phase A isolation.
5. Piping inside the containment vessel has five branches. Identical isolation valves are installed in each branch. The valve which has it's characteristics tabulated in the program listed is normally open. The other three valves are normally closed and also receive phase A signal. The fifth valve is a relief valve which relieves into containment.
6. The piping is joined by a line leading to the nitrogen supply outside of the shield building. This line is isolated by an air operated gate valve with phase A isolation.
7. Ducting outside the shield building has two branches. Identical isolation valves are installed in each branch. The characteristics of one of the valves are tabulated in the program listed.
8. Piping outside of the shield building has nine branches. Each line is isolated by a relief valve.
9. Inside the containment vessel a line is provided for pressure relief of the volume between the isolation valves. This line is isolated by a check valve.
10. The piping is joined by a line used for S.I.S. testing outside of the shield building. This line is isolated by an air operated globe valve with remote manual actuation from the main control room.
11. The piping has a bypass line attached to it inside the annulus. This bypass line is isolated by a locked closed gate valve with local manual operation.
12. The piping in the annulus has two isolation valves in series. One is tabulated in the table. The other is a check valve.
13. Inside the containment the line branches into two lines. Each line is isolated by an air operated globe valve with remote manual actuation from the main control room. One of which is tabulated in the program.
14. The pipe diameter given for the shield building penetration is an equivalent diameter. These penetrations through the shield building are rectangular ducts with a cross sectional area which is equal to the area of a pipe with the given diameter.
15. Inside primary containment the line has two branches. Identical isolation valves are installed in each branch. The characeristics of one of the valves are tabulated in the program listing.
16. Inside primary containment, the line has four branches. Identical isolation check valves are installed in two of the branches. The characteristics of one of these valves are tabulted in the program listing. The third line employs an air operated globe valve which has remote manual actuation from the main control room. The fourth branch has a relief valve as the isolation valve.
17. Inside primary containment, the line has two branches. One of these valves is an isolation check valve. The characteristics of this valve are tabulated in the program listing. The remaining valve is an air operated globe valve which has remote manual actuation from the main control room.
18. The dp sensors are closed systems outside of containment that are attached directly to the containment. No isolation valves are employed for these sensors as they use a double diaphragm system for dp measurement. The diaphragms are qualified for the post-LOCA use.
19. Inside primary containment, the line has five branches. Identical isolation check valves are installed in four of those branches. The characteristics of one of these valves are tabulated in the program listing. The remaining branch incorporates an air operated globe valve which isolates on the containment isolation signal.
20. Inside the containment, the line branches into two branches. Each line is isolated by a motor operated gate valve, one of which is tabulated in the program listing.
21. Post accident monitoring system (PAMS) wide range pressure sensors also monitor pressure through this penetration.
22. The isolation valve(s) which represent an additional boundary outside containment in HVAC systems are used to prevent bypass leakage from the annulus.
23. Isolation valves can be manually actuated electrically or pneumatically.
24. Two blind flanges are employed in the annulus, one acts as a primary containment isolation barrier and the other as a secondary containment isolation barrier. The primary and secondary containment penetrations are not connected except for the type A test pressurization.
25. Outside containment, relief valves release into this line in the event of SIS overpressure, thus the system is almost always closed, but could open for pressure relief anytime SIS is on.
26. Outside containment, a 1 inch line ties is between the outer isolation valve and primary containment. This line is isolated by a manually locked closed containment isolation valve.
27. Deleted.
28. The containment isolation valves in this line require simultaneous open signals from two separate switches in order to open one switch is located in the main control room and the other is located in the remote sampling station.
29. This penetration contains both the intake and return line for a hydrogen analyzer. These lines form a closed system outside containment and each has a containment isolation valve inside containment. One of the isolation valves is listed in the table. The other valve is identical.
30. The containment isolation valves in this line require simultaneous open signals from two seperate switches in order to open.

One switch is located in the main control room and the other in the remote sampling station.

31. Inside primary containment, the line has three branches. Identical isolation check valves are installed in two of the branches. The characteristics of one of these valves are tabulated in the program listing. The third line employs an air operated glove valve which has remote manual operation in the main control room.
32. This line transmits pressure from the primary system to pressure instrumentation for determining the reactor vessel fluid level. The line is fluid filled and double diaphramed to prevent communications between the primary system fluid and the auxiliary building. No primary system fluid travels through the penetration since the inner diaphragm is located near the reactor vessel. Since double diaphragms are employed for containment isolation, no containment isolation valves are used.
33. This line joins the secondary side of the steam genertor(s) inside containment and is therefore considered a closed system inside containment. The isolation valves which exist outboard of containment are not leakrate tested due to flooding of the steam generators post LOCA.
34. Outside primary containment, this line branches into two lines. Identical inline isolation valves are installed in each line. The characteristics of one of these valves is tabulated in the program listing. Additionally, one of the inline isolation valves has a bypass line which is isolated by normally closed remote manual isolation valve.
35. The isolation valve in this line (MSIV) has a bypass line which is isolated by a normally closed remote manual isolation valve. This line also has safety steam dump valves located between primary containment and the MSIV.
36. Between primary containment and the outer isolation valve in this line, an auxiliary feedwater line adjoins. The auxiliary feedwater line has isolation valves which are located in the same manner as the auxiliary feedwater isolation valves listed for X-40A and X-40B.
37. Outside primary containment, this line branches into two lines. Similar inline isolation valves are installed in each line. The characteristics of one of these valves is tabulated in the program listing.
38. One wet layup line ties into this line inboard of the outer isolation valve. The layup is isolated with a manual containment isolation valve which is locked closed prior to criticality.

Table 6.2.4-2 POSSIBLE BYPASS LEAKAGE PATHS TO THE AUXILIARY BUILDING (Page 1 of 6)

Penetration Number	Penetrating Line Name	Description
X-2 A, B	Personnel Access Hatch	Any leakage would be treated by the ABGTS.
X-3	Fuel Transfer Tube	Any leakage would be treated by the ABGTS.
X-15	Chemical and Volume Letdown Line	Any leakage would be treated by the ABGTS.
X-16*	Normal Charging Line	High water pressure maintained on outboard valve, even in the event of a single failure.
X-17	RHR Return Line	System is in operation after an accident. Cross ties between pumps maintain flows in the event of a single failure.
X-19 A&B*	RHR Sump Suction line	Line is always filled with water. No atmospheric bypass leakage to the Auxiliary Building can occur after a LOCA.
X-20 A&B*	SIS RHR Pump Discharge	System is in operation after a LOCA. Cross ties between pumps maintain flows and pressure in the event of a single failure.
X-21*	Safety Injection Pump Discharge	Line in use during a LOCA which will be pressurized even in the event of a single failure due to cross ties between pumps.
X-22*	Charging Pump Discharge	Same as for Penetration No. 21.
X-23	PAS Containment Air Sample	Any leakage would be treated by the ABGTS.
X-24*	SIS Relief Valve Discharge	Any leakage through the relief valve is prevented as the valves are pressurized outside containment by the SIS system. Any leakage would be into containment.
X-25A	Pressurizer Liquid Sample	Any leakage would be treated by the ABGTS.
X-25D	Pressurizer Gas Sample	Any leakage would be treated by the ABGTS.
X-27 A, B, C, D	Steam Generator Sample Lines	Any leakage would be treated by the ABGTS.
X-28	PAS Containment Air Sample	Any leakage would be treated by the ABGTS.

Table 6.2.4-2 POSSIBLE BYPASS LEAKAGE PATHS TO THE AUXILIARY BUILDING (Continued) (Page 2 of 6)

Penetration Number	Penetrating Line Name	Description
X-29	CCS from RC Pump Coolers	Any leakage would be treated by the ABGTS.
X-30	Accumulator to Holdup Tank	Any leakage would be treated by the ABGTS.
X-31	Fire Protection	Any leakage would be treated by the ABGTS.
X-32*	Safety Injection Pump Discharge	Same as for Penetration No. 21.
X-33*	Safety Injection Pump Discharge	Same as for Penetration No. 21.
X-34	Control Air I&C	Any leakage would be treated by the ABGTS.
X-35	CCS from Excess Letdown Heat Exchanger	Same as for Penetration No. 29.
X-39A	N_2 to Accumulators	Any leakage would be treated by the ABGTS.
X-39B	N_2 to Pressurizer Relief Tank	Any leakage would be treated by the ABGTS.
X-40D	Hydrogen Purge	Any leakage would be treated by the ABGTS.
X-41	Floor Sump Pump Discharge	Any leakage would be treated by the ABGTS.
X-42	Pressurizer Relief Tank Makeup	Any leakage would be treated by the ABGTS.
X-43 A*,B*,C*,D*	To RC Pump Seals	The line is pressurized during a LOCA even in the event of a single failure. If there was any leakage it would be treated by the ABGTS.
X-44	From RC Pump Seals	Any leakage would be treated by the ABGTS.
X-45	RC Drain Tank and PRT to Vent Header	Any leakage would be treated by the ABGTS.
X-46	RC Drain Tank Pump Discharge	Any leakage would be treated by the ABGTS.
X-47A	Glycol Line to Ice Condenser	Any leakage would be treated by the ABGTS.
X-47B	Glycol Line from Ice Condenser	Any leakage would be treated by the ABGTS.

Table 6.2.4-2 POSSIBLE BYPASS LEAKAGE PATHS TO THE AUXILIARY BUILDING (Continued) (Page 3 of 6)

Penetration Number	Penetrating Line Name	Description
X-48 A&B*	Containment Spray	System in operation after a LOCA. A 30-day water leg seal is maintained in this line.
X-49 A&B	RHR Spray	System in operation after a LOCA. System pressure maintained even in the event of a single failure due to pump cross ties.
X-50A	RCP Thermal Barrier Return	Same as for Penetration No. 29.
X-50B	RCP Thermal Barrier Supply	Any leakage would be treated by the ABGTS.
X-52*	CCS to RC Pump Coolers	Same as for Penetration No. 43.
X-53*	CCS to Excess Letdown Heat Exchanger	Same as for Penetration No. 43.
X-56A*	Lower Containment ERCW Supply	High water pressure maintained on outboard valve, even in the event of a single failure.
X-57A*	Lower Containment ERCW Return	High water pressure maintained on outboard valve, even in the event of a single failure.
X-58A*	Lower Containment ERCW Supply	High water pressure maintained on outboard valve, even in the event of a single failure.
X-58B	RCS Pressure Sensor	Any leakage would be treated by the ABGTS.
X-59A*	Lower Containment ERCW Return	High water pressure maintained on outboard valve, even in the event of a single failure.
X-60A*	Lower Containment ERCW Supply	High water pressure maintained on outboard valve, even in the event of a single failure.
X-61A*	Lower Containment ERCW Return	High water pressure maintained on outboard valve, even in the event of a single failure.
X-62A*	Lower Containment ERCW Supply	High water pressure maintained on outboard valve, even in the event of a single failure.
X-63A*	Lower Containment ERCW Return	High water pressure maintained on outboard valve, even in the event of a single failure.

Table 6.2.4-2 POSSIBLE BYPASS LEAKAGE PATHS TO THE AUXILIARY BUILDING (Continued) (Page 4 of 6)

Penetration Number	Penetrating Line Name	Description
X-64	AC Chilled Water (ERCW)	Any leakage would be treated by the ABGTS.
X-65	AC Chilled Water (ERCW)	Any leakage would be treated by the ABGTS.
X-66	AC Chilled Water (ERCW)	Any leakage would be treated by the ABGTS.
X-67	AC Chilled Water (ERCW)	Any leakage would be treated by the ABGTS.
X-68*	Upper Containment ERCW Supply	High water pressure maintained on outboard valve, even in the event of a single failure.
X-69*	Upper Containment ERCW Supply	High water pressure maintained on outboard valve, even in the event of a single failure.
X-70*	Upper Containment ERCW Supply	High water pressure maintained on outboard valve, even in the event of a single failure.
X-71*	Upper Containment ERCW Supply	High water pressure maintained on outboard valve, even in the event of a single failure.
X-72*	Upper Containment ERCW Supply	High water pressure maintained on outboard valve, even in the event of a single failure.
X-73*	Upper Containment ERCW Supply	High water pressure maintained on outboard valve, even in the event of a single failure.
X-74*	Upper Containment ERCW Supply	High water pressure maintained on outboard valve, even in the event of a single failure.
X-75*	Upper Containment ERCW Supply	High water pressure maintained on outboard valve, even in the event of a single failure.
X-76	Service Air	Any leakage would be treated by the ABGTS.
X-77	Demineralized Water	Any leakage would be treated by the ABGTS.
X-78	Fire Protection	Any leakage would be treated by the ABGTS.

Table 6.2.4-2 POSSIBLE BYPASS LEAKAGE PATHS TO THE AUXILIARY BUILDING (Continued) (Page 5 of 6)

Penetration Number	Penetrating Line Name	Description
X-81	RC Drain Tank to Gas Analyzer	Any leakage would be treated by the ABGTS.
X-82	Refueling Cavity C-U Pump Suction	Any leakage would be treated by the ABGTS.
X-83	Refueling Cavity C-U Pump Discharge	Any leakage would be treated by the ABGTS.
X-84A	Pressurizer Relief Tank to Gas Analyzer	Any leakage would be treated by the ABGTS.
X-84B	Reactor Vessel Level Indicating System	Any leakage would be treated by the ABGTS.
X-84C	Reactor Vessel Level Indicating System	Any leakage would be treated by the ABGTS.
X-84D	Reactor Vessel Level Indicating System	Any leakage would be treated by the ABGTS.
X-85A	Excess Letdown Heat Exchanger to Boron Analyzer	Any leakage would be treated by the ABGTS.
X-85B	Hot Leg Sample	Any leakage would be treated by the ABGTS.
X-86A	PAS Containment Air Sample	Any leakage would be treated by the ABGTS.
X-86B	PAS Containment Air Sample	Any leakage would be treated by the ABGTS.
X-86C	PAS Containment Sump Sample	Any leakage would be treated by the ABGTS.
X-87B	Reactor Vessel Level Indicating System	Any leakage would be treated by the ABGTS.
X-87C	Reactor Vessel Level Indicating System	Any leakage would be treated by the ABGTS.
X-87D	Reactor Vessel Level Indicating System	Any leakage would be treated by the ABGTS.
X-90	Control Air	Any leakage would be treated by the ABGTS.
X-91	Control Air	Any leakage would be treated by the ABGTS.
X-92 A, B	H_2 Analyzers	Any leakage would be treated by the ABGTS.
X-92C	PAS Hot Leg Sample	Any leakage would be treated by the ABGTS.

Table 6.2.4-2 POSSIBLE BYPASS LEAKAGE PATHS TO THE AUXILIARY BUILDING (Continued) (Page 6 of 6)

Penetration Number	Penetrating Line Name	Description
X-93	Accumulator Sample	Any leakage would be treated by the ABGTS.
X-94 B, C	Containment Atmosphere Radiation Monitor	Any leakage would be treated by the ABGTS.
X-95 B, C	Containment Atmosphere Radiation Monitor	Any leakage would be treated by the ABGTS.
X-99	H_2 Analyzers	Any leakage would be treated by the ABGTS.
X-100	H_2 Analyzers	Any leakage would be treated by the ABGTS.
X-105	PAS Containment Air Sample	Any leakage would be treated by the ABGTS.
X-106	PAS Hot Leg Sample	Any leakage would be treated by the ABGTS.
X-107	RHR Supply	Any leakage would be treated by the ABGTS.
X-108	Maintenance Port	Any leakage would be treated by the ABGTS.
X-109	Maintenance Port	Any leakage would be treated by the ABGTS.
X-114	Ice Condenser (to Glycol Cool FL Pumps)	Any leakage would be treated by the ABGTS.
X-115	Ice Condenser (from Glycol Cool FL Pumps)	Any leakage would be treated by the ABGTS.

* Not a bypass leakage path to the Auxiliary Building.

Table 6.2.4-3 PREVENTION OF BYPASS LEAKAGE TO THE ATMOSPHERE (Page 1 of 2)

Penetration Number	Penetration Line Name	Description
X-4	Lower Compartment Purge Air Exhaust	Leakoff lines to the annulus
X-5	Instrument Room Purge Air Exhaust	Leakoff lines to the annulus
X-6	Upper Compartment Purge Air Exhaust	Leakoff lines to the annulus
X-7	Upper Compartment Purge Air Exhaust	Leakoff lines to the annulus
X-8A	Feedwater Bypass	Secondary side of the steam generator is pressurized above containment pressure
X-8B	Feedwater Bypass	Same as for Penetration X-8A
X-8C	Feedwater Bypass	Same as for Penetration X-8A
X-8D	Feedwater Bypass	Same as for Penetration X-8A
X-9A	Upper Compartment Purge Air Supply	Leakoff lines to the annulus
X-9B	Upper Compartment Purge Air Supply	Leakoff lines to the annulus
X-10A	Lower Compartment Purge Air Supply	Leakoff lines to the annulus
X-10B	Lower Compartment Purge Air Supply	Leakoff lines to the annulus
X-11	Instrument Room Purge Air Exhaust	Leakoff lines to the annulus
X-12A	Feedwater	Same as for Penetration X-8A
X-12B	Feedwater	Same as for Penetration X-8A
X-12C	Feedwater	Same as for Penetration X-8A
X-12D	Feedwater	Same as for Penetration X-8A
X-13A	Main Steam Line	Same as for Penetration X-8A
X-13B	Main Steam Line	Same as for Penetration X-8A

Table 6.2.4-3 PREVENTION OF BYPASS LEAKAGE TO THE ATMOSPHERE (Continued) (Page 2 of 2)

Penetration Number	Penetration Line Name	Description
X-13C	Main Stem Line	Same as for Penetration X-8A
X-13D	Main Steam Line	Same as for Penetration X-8A
X-14A, B, C, D	Steam Generator Blowdown Lines	Same as for Penetration X-8A
X-40A	Auxiliary Feedwater	Same as for Penetration X-8A
X-40B	Auxiliary Feedwater	Same as for Penetration X-8A
X-56A	Lower Compartment ERCW Supply	Leakage prevented by combination of water seal and piping traps.
X-57A	Lower Compartment ERCW Supply	Same as for Penetration X-56A
X-58A	Lower Compartment ERCW Supply	Same as for Penetration X-56A
X-59A	Lower Compartment ERCW Supply	Same as for Penetration X-56A
X-60A	Lower Compartment ERCW Supply	Same as for Penetration X-56A
X-61A	Lower Compartment ERCW Supply	Same as for Penetration X-56A
X-62A	Lower Compartment ERCW Supply	Same as for Penetration X-56A
X-63A	Lower Compartment ERCW Supply	Same as for Penetration X-56A
X-68	Upper Compartment ERCW Supply	Same as for Penetration X-56A
X-69	Upper Compartment ERCW Supply	Same as for Penetration X-56A
X-70	Upper Compartment ERCW Supply	Same as for Penetration X-56A
X-71	Upper Compartment ERCW Supply	Same as for Penetration X-56A
X-72	Upper Compartment ERCW Supply	Same as for Penetration X-56A
X-73	Upper Compartment ERCW Supply	Same as for Penetration X-56A
X-74	Upper Compartment ERCW Supply	Same as for Penetration X-56A
X-75	Upper Compartment ERCW Supply	Same as for Penetration X-56A
X-80	Lower Compartment Purge Air Supply	Leakoff lines to the annulus

Table 6.2.4-4 INSTRUMENT LINES PENETRATING PRIMARY CONTAINMENT (Page 1 of 4)

Line Identification	No.	Penetration Number	Line Size Inches	Orifice	Inner Isolation Valve Number	Valve Type	Valve Location	Outer Isolation Valve Number	Valve Type	Valve Location
PAS Containment Air INTK LC Train B	1	X-23	3/8	No	43-319	Globe	Inside Prim Containment	43-318	Globe	Annulus
Pressurizer Liquid Sample	2	X-25A	3/8	No	43-11	Globe	Inside Prim Containment	43-12	Globe	Annulus
Containment Annulus ΔP Sensor[1]	3	X-25B	1/2	No	-	-	-	-	-	-
Containment Annulus ΔP Sensor[1]	4	X-25C	1/2	No	-	-	-	-	-	-
Pressurizer Steam Sample	5	X-25D	3/8	No	43-2	Globe	Inside Prim Containment	43-3	Globe	Annulus
Containment Annulus ΔP Sensor[1]	6	X-26C	1/2	No	-	-	-	-	-	-
Steam Generator No. 1 Sample	7	X-27A	3/8	No	43-54D	Globe	Inside Prim Containment	43-55	Globe	Annulus
Steam Generator No. 2 Sample	8	X-27B	3/8	No	43-56D	Globe	Inside Prim Containment	43-58	Globe	Annulus
Steam Generator No. 3 Sample	9	X-27C	3/8	No	43-59D	Globe	Inside Prim Containment	43-61	Globe	Annulus
Steam Generator No. 4 Sample	10	X-27D	3/8	No	3-63D	Globe	Inside Prim Containment	43-64	Globe	Annulus
PAS Containment Return Train B	11	X-28	3/8	No	43-N0030	Check	Inside Prim Containment	43-341	Globe	Annulus

Table 6.2.4-4 INSTRUMENT LINES PENETRATING PRIMARY CONTAINMENT (Continued) (Page 2 of 4)

Line Identification	No.	Penetration Number	Line Size Inches	Orifice	Inner Isolation Valve Number	Valve Type	Valve Location	Outer Isolation Valve Number	Valve Type	Valve Location
Accum. to Holdup Tank	12	X-30	3/4	No	63-071	Globe	Inside Prim Containment	63-084	Globe	Outside Shield Building
Pressurizer Relief Tank to Gas Analyzer	14	X-84A	3/8	No	68-308	Globe	Inside Prim Containment	68-307	Globe	Annulus
Reactor Vessel Level Ind Sys	15	X-84B	3/16	No	-	-	-	-	-	-
Reactor Vessel Level Ind Sys	16	X-84C	3/16	No	-	-	-	-	-	-
Reactor Vessel Level Ind Sys	17	X-84D	3/16	No	-	-	-	-	-	-
Excess Letdown Heat Exchanger to Boron Analyzer	18	X-85A	3/8	No	43-75	Globe	Inside Prim Containment	43-77	Globe	Annulus
Hot Leg Sample - Loops 1 and 3	19	X-85B	3/8	No	43-22	Globe	Inside Prim Containment	43-23	Globe	Annulus
Containment Annulus ΔP Sensor[1]	20	X-85C	1/2	No	-	-	-	-	-	-
PAS Containment Air INTK UC Train A	21	X-86A	3/8	No	43-288	Globe	Inside Prim Containment	43-287	Globe	Annulus
PAS Containment Air RTRN Train A	22	X-86B	3/8	No	-	Check	-	43-307	Globe	Annulus
PAS Containment Sump RTRN Train A	23	X-86C	3/8	No	-	Check	Inside Prim Containment	43-342	Globe	Annulus
Reactor Vessel Level Ind Sys	25	X-87B	3/16	No	-	-	-	-	-	-

Table 6.2.4-4 INSTRUMENT LINES PENETRATING PRIMARY CONTAINMENT (Continued) (Page 3 of 4)

Line Identification	No.	Penetration Number	Line Size Inches	Orifice	Inner Isolation Valve Number	Valve Type	Valve Location	Outer Isolation Valve Number	Valve Type	Valve Location
Reactor Vessel Level Ind Sys	26	X-87C	3/16	No	-	-	-	-	-	-
Reactor Vessel Level Ind Sys	27	X-87D	3/16	No	-	-	-	-	-	-
Hydrogen Analyzer Train B	30	X-92A	3/8	No	43-207	Globe	Inside Prim Containment	43-435	Globe	Annulus
Hydrogen Analyzer Train B	31	X-92B	3/8	No	43-208	Globe	Inside Prim Containment	43-436	Globe	Annulus
PAS Hot Leg 1 - Train A	32	X-92C	3/8	No	43-251	Globe	Inside Prim Containment	43-250	Globe	Annulus
Accumulator Sample	33	X-93	3/8	No	43-34	Globe	Inside Prim Containment	43-35	Globe	Annulus
Upper Compartment Air Monitor	35	X-95C	1-1/2	No	90-114 90-115	Globe	Inside Prim Containment	90-113	Globe	Annulus
Upper Compartment Air Monitor	36	X-95B	1-1/2	No	90-116	Globe	Inside Prim Containment	90-117	Globe	Annulus
Lower Compartment Air Monitor	38	X-94C	1-1/2	No	90-108 90-109	Globe	Inside Prim Containment	90-107	Globe	Annulus
Lower Compartment Air Monitor	39	X-94B	1-1/2	No	90-110	Globe	Inside Prim Containment	90-111	Globe	Annulus

Table 6.2.4-4 INSTRUMENT LINES PENETRATING PRIMARY CONTAINMENT (Continued) (Page 4 of 4)

Line Identification	No.	Penetration Number	Line Size Inches	Orifice	Inner Isolation Valve Number	Valve Type	Valve Location	Outer Isolation Valve Number	Valve Type	Valve Location
Containment Annulus [a]P Sensor[1]	40	X-96C	1/2	No	-	-	-	-	-	-
Containment Annulus [a]P Sensor	41	X-97	1/2	No	30-134	Globe	Containment	30-135	Globe	Annulus
Hydrogen Analyzer - Train A	42	X-99	3/8	No	43-202	Globe	Containment	43-434	Globe	Annulus
Hydrogen Analyzer - Train A	43	X-100	3/8	No	43-201	Globe	Containment	43-433	Globe	Annulus
PAS Containment Air RTRN Train B	45	X-105	3/8	No	-	Check	-	43-325	Globe	Annulus
PAS Hot Leg 3 - Train B	46	X-106	3/8	No	43-310	Globe	-	43-309	Globe	Annulus

[1]These have no in-line containment isolation valves - see Section 6.2.4.3 and Table 6.2.4-1.

THIS PAGE INTENTIONALLY BLANK

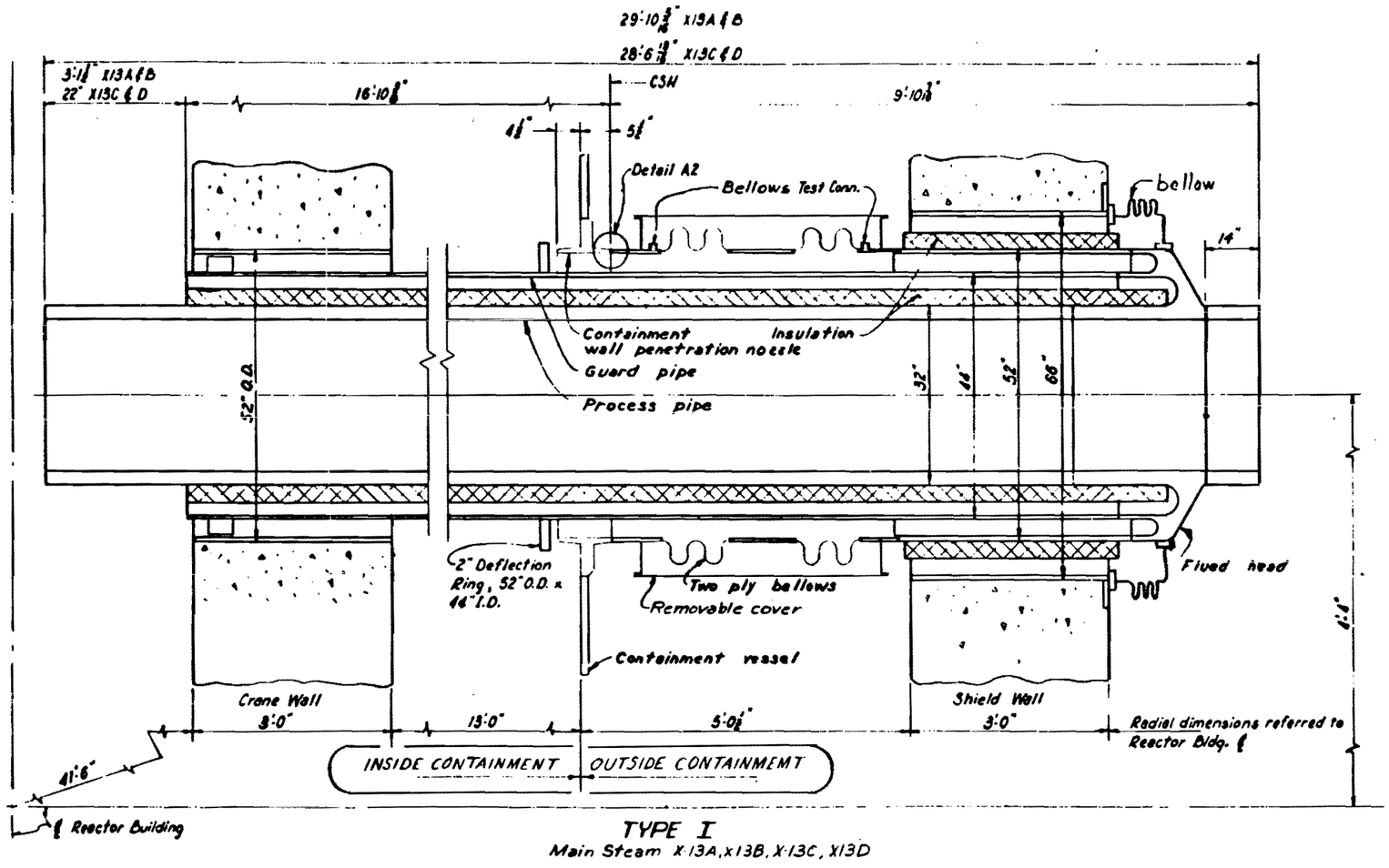

Figure 6.2.4-1 Type 1, Main Stearn X-I3A, X-I3B, X-I3C, X-13D

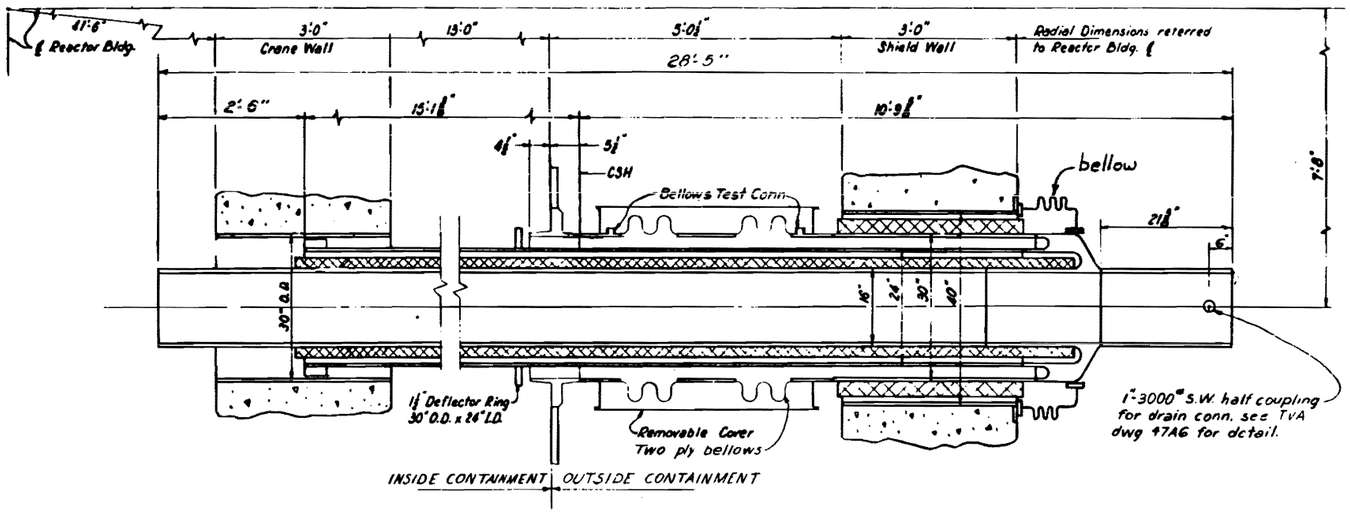

Figure 6.2.4-2 Type II, Feedwater X-12A, X-l2B, X-12C, X-12D

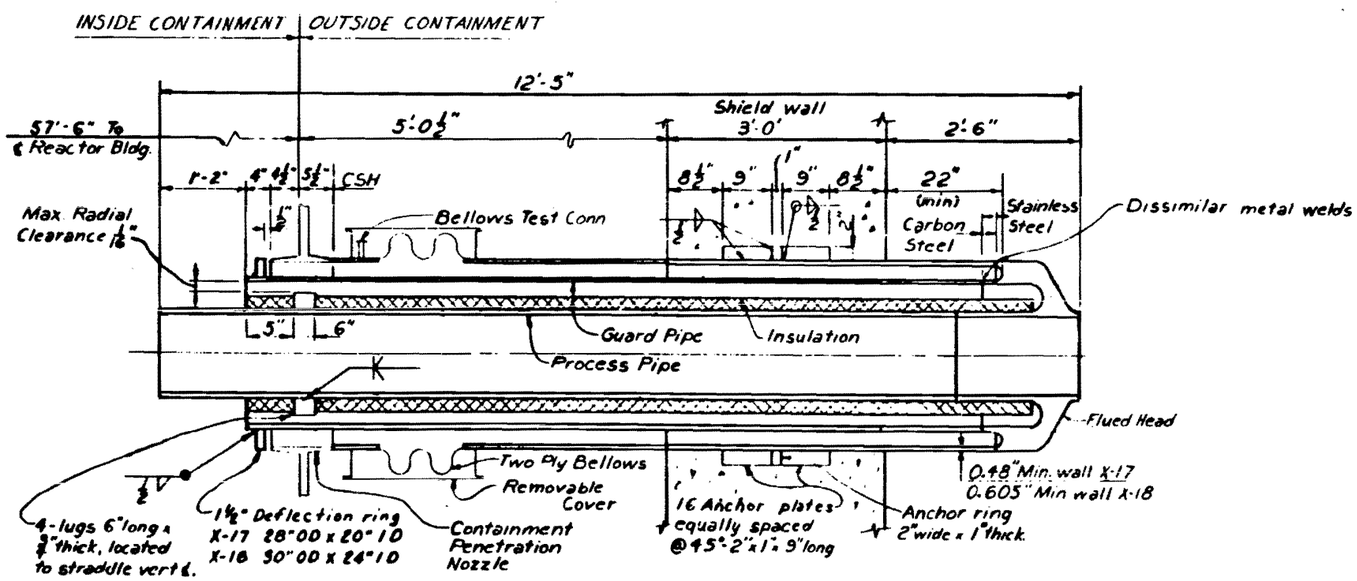

Figure 6.2.4-3 Type III, Residual Heat Removal Pump Return X-17, Pump Supply X-I07

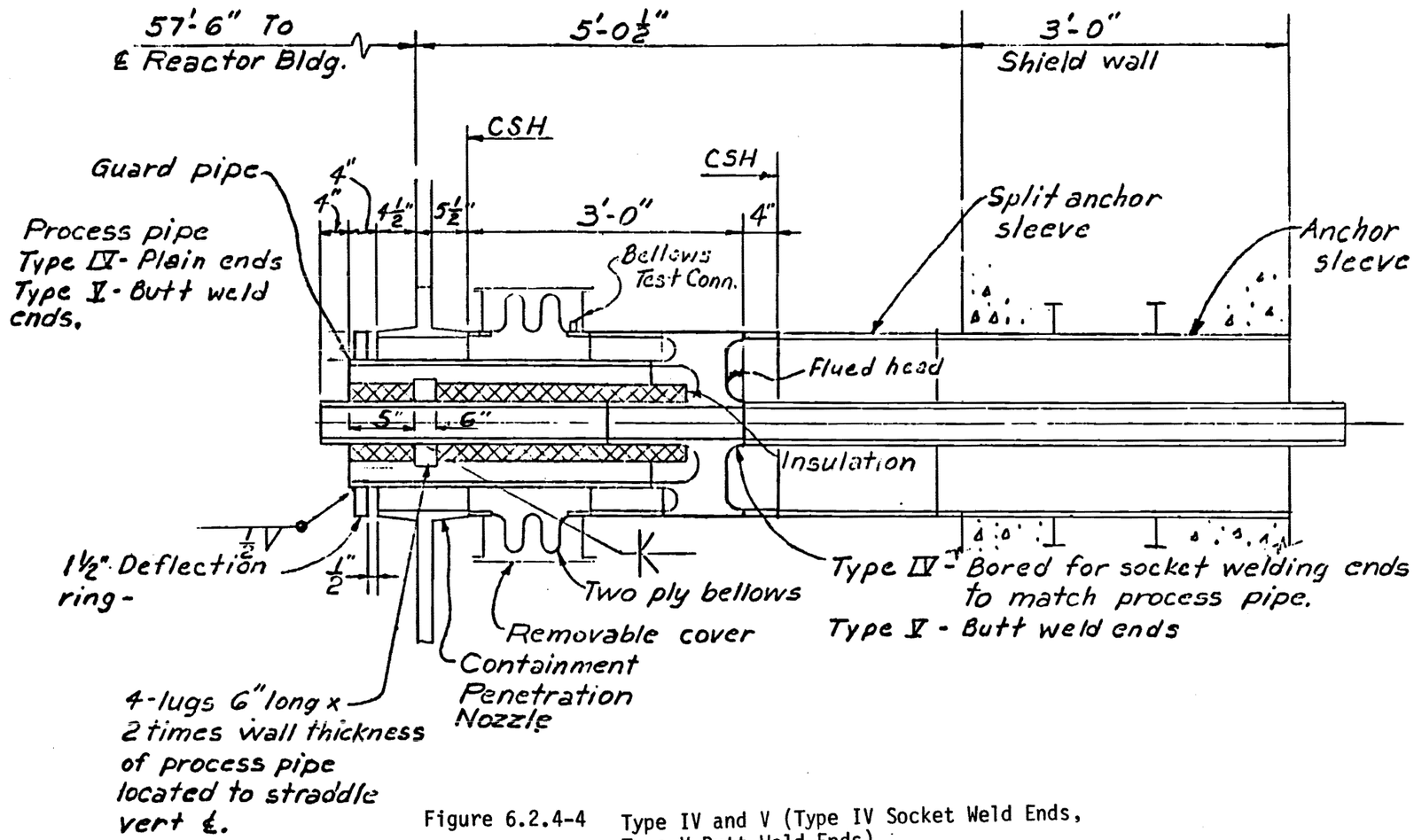

Figure 6.2.4-4 Type IV and V (Type IV Socket Weld Ends, Type V Butt Weld Ends)

Figure 6.2.4-4 Type IV and V (Type IV Socket Weld Ends, Type V Butt Weld Ends)

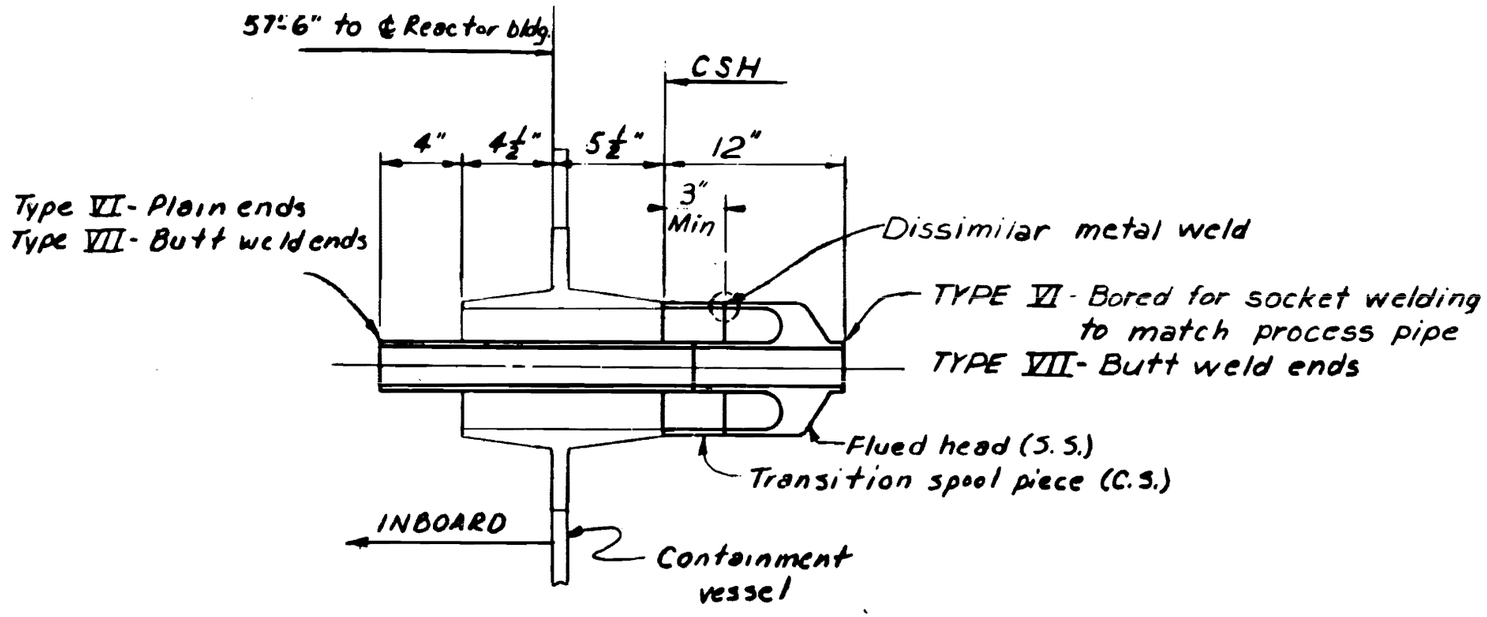

Figure 6.2.4-5 Type VI and VII (Type VI for Socket Weld SS Process Lines, Type VII for Butt Weld SS Process Lines

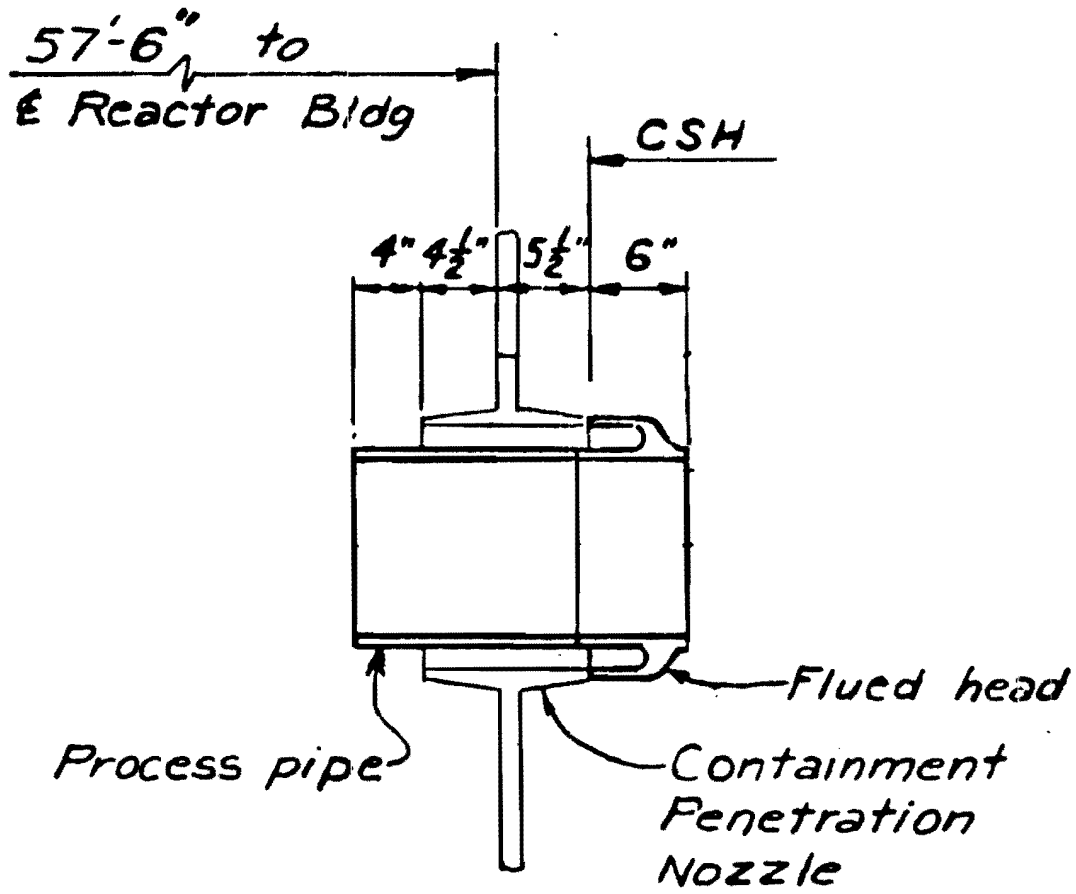

Figure 6.2.4-6 Type VIII, for Butt Weld C.S. Process Lines

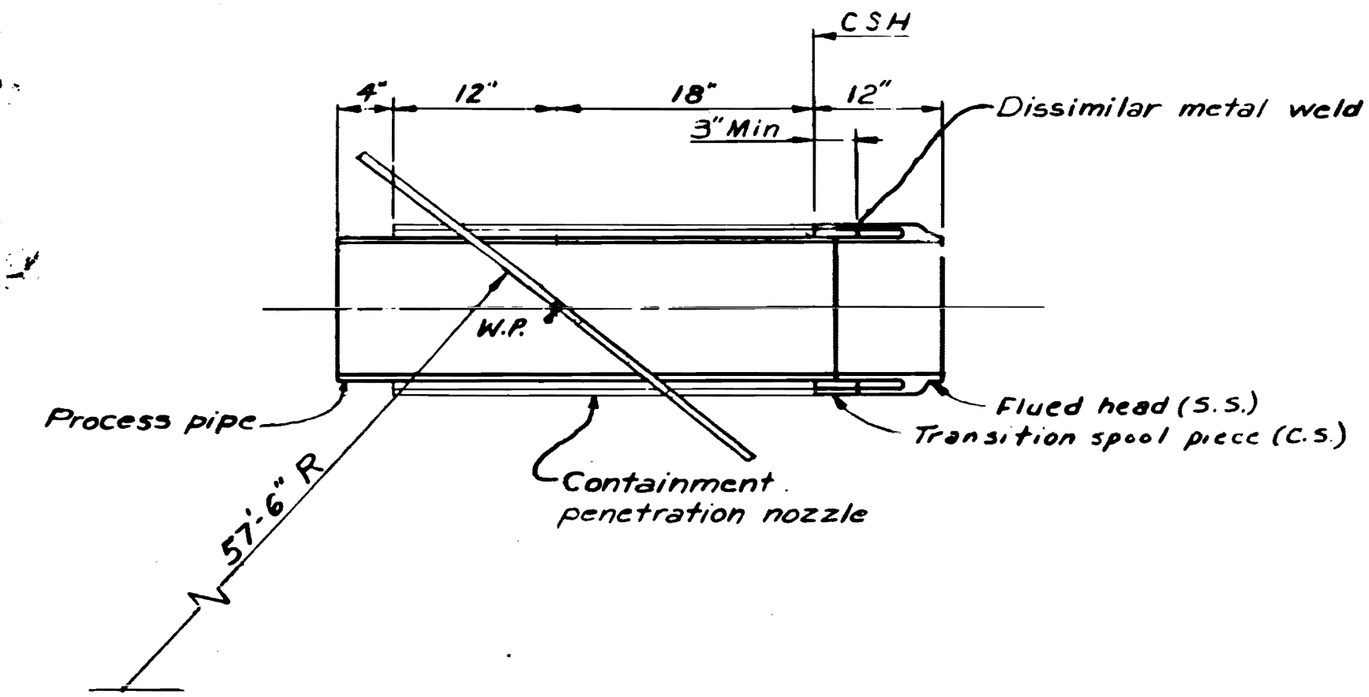

Figure 6.2.4-7 Type IX, for SS Process Lines

Figure 6.2.4-7 Type IX, for SS Process Lines

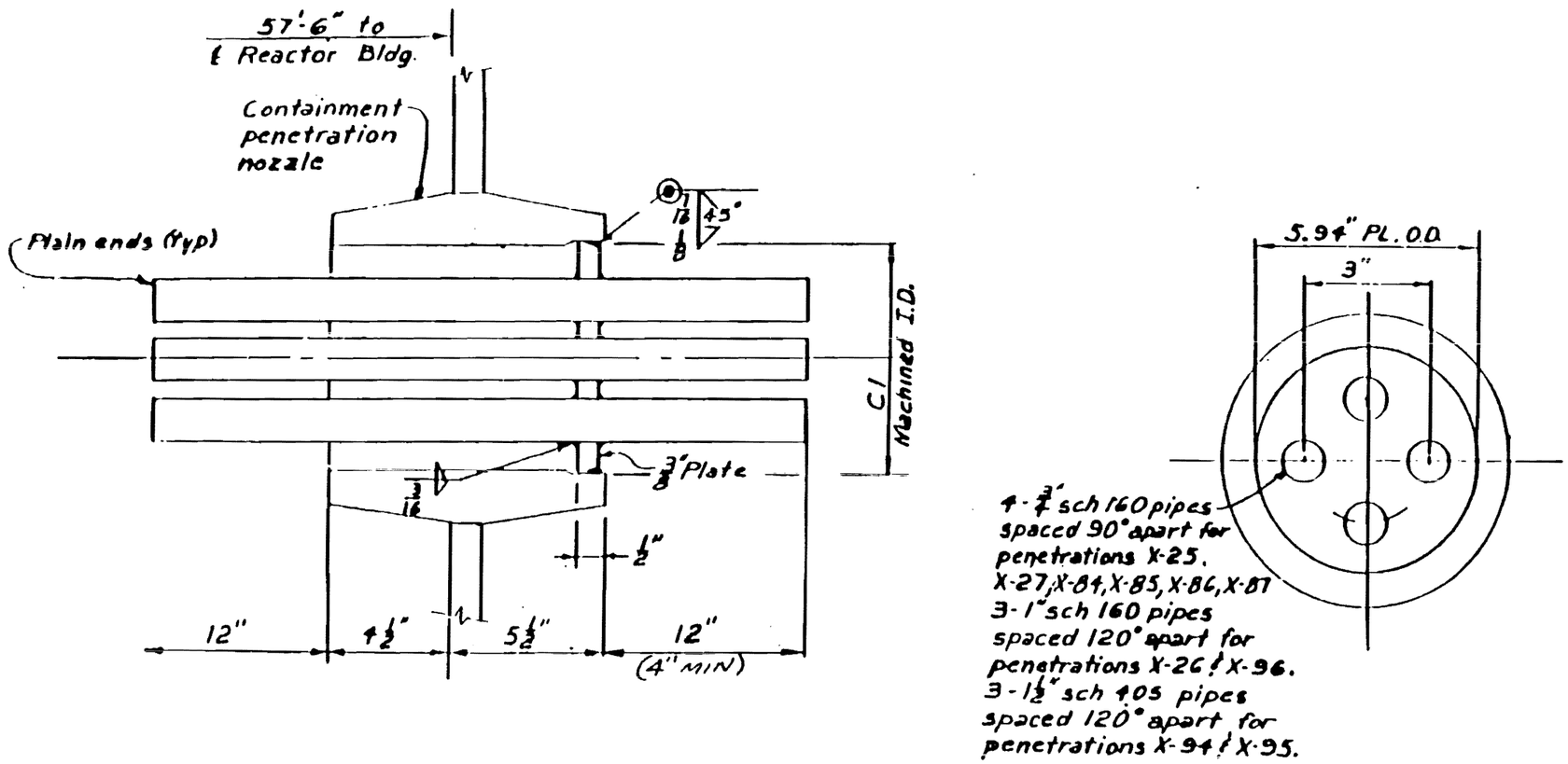

Figure 6.2.4-8 Type X, Instrument Penetrations

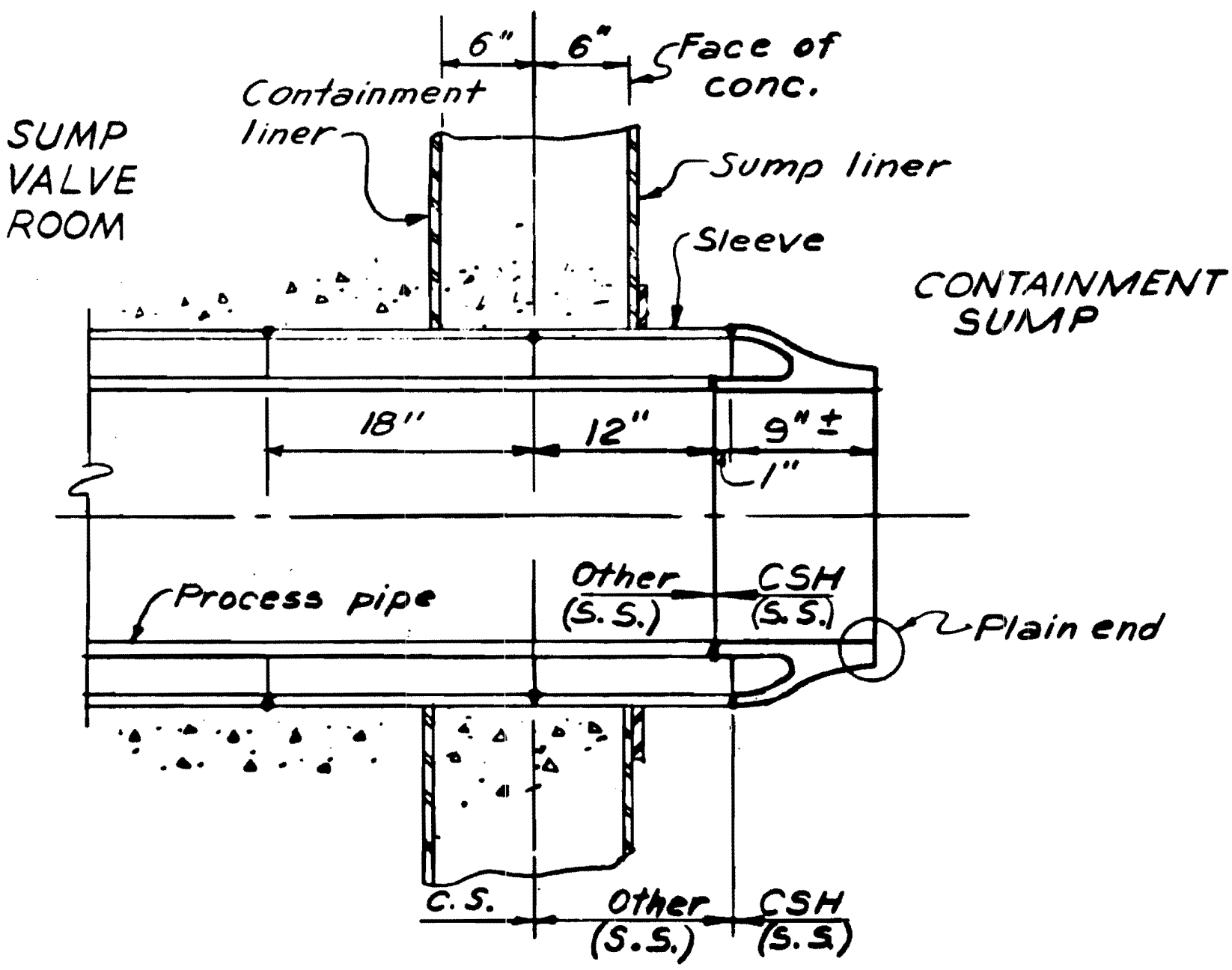

Figure 6.2.4-9 Type XII, Emergency Sump

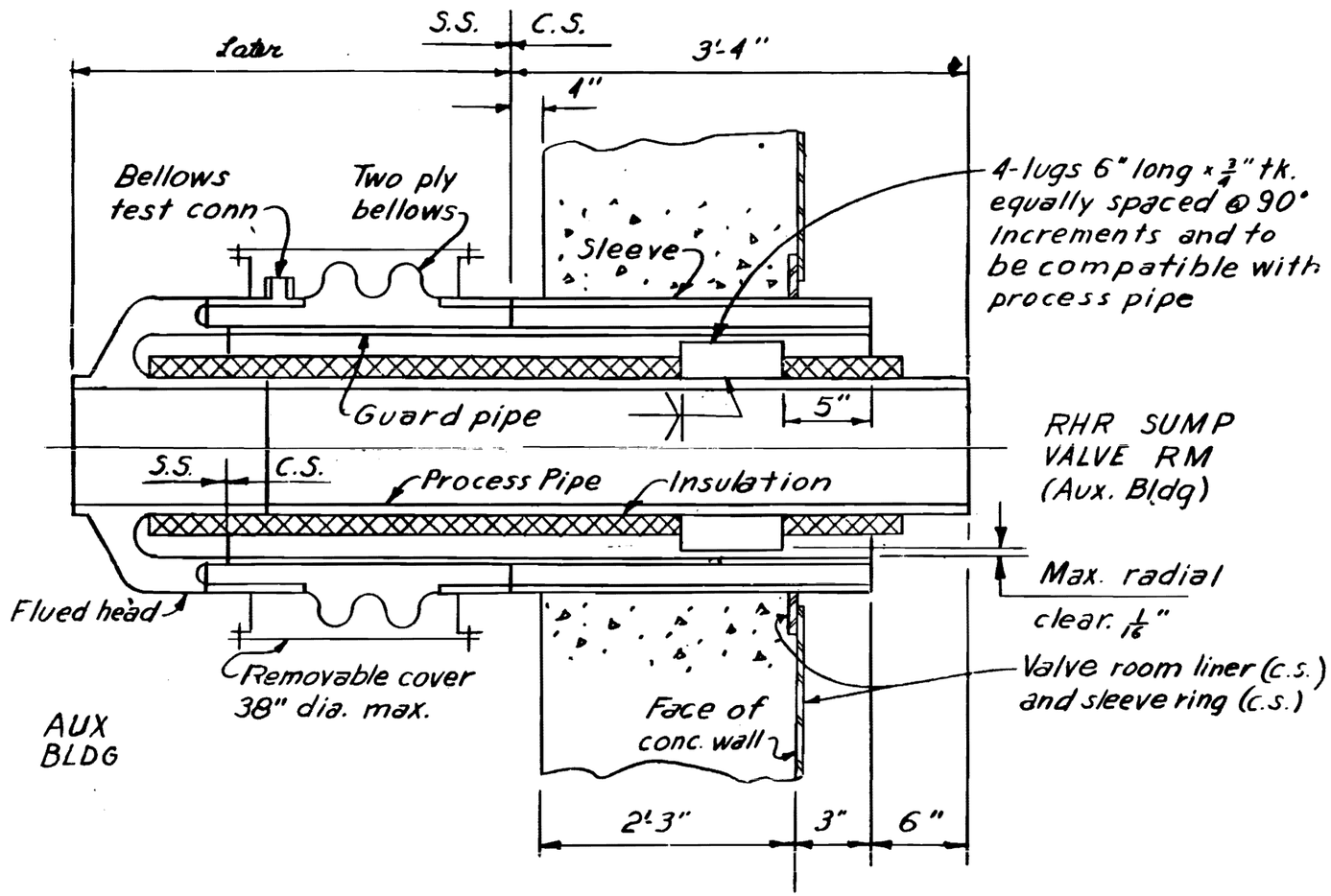

Figure 6.2.4-10 Type XI, Emergency Sump

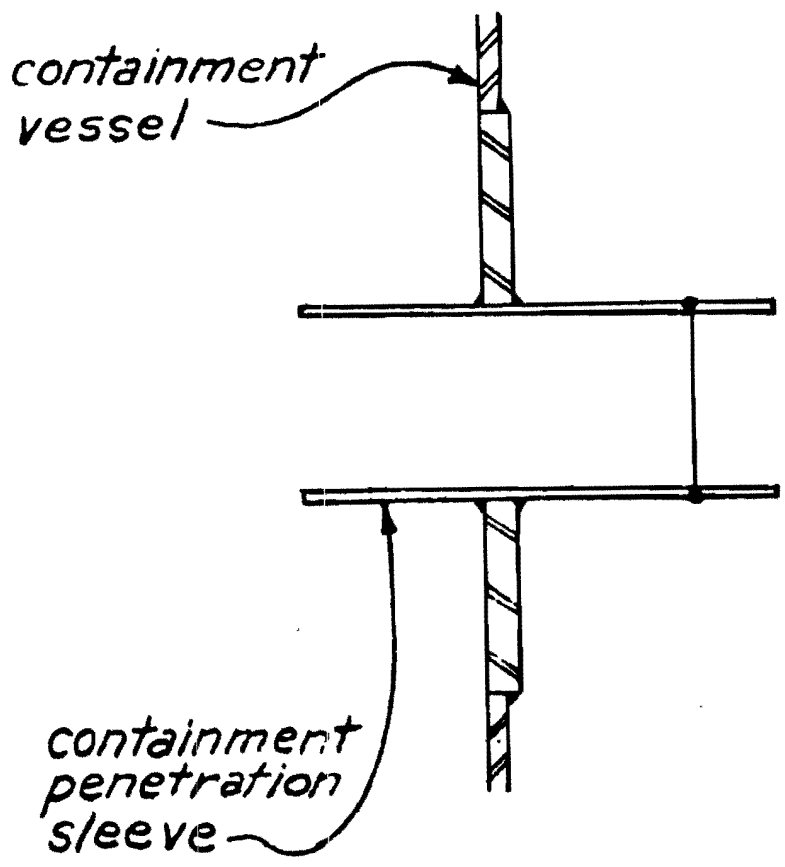

Figure 6.2.4-11 Type XIII, Ventilation Duct Penetration

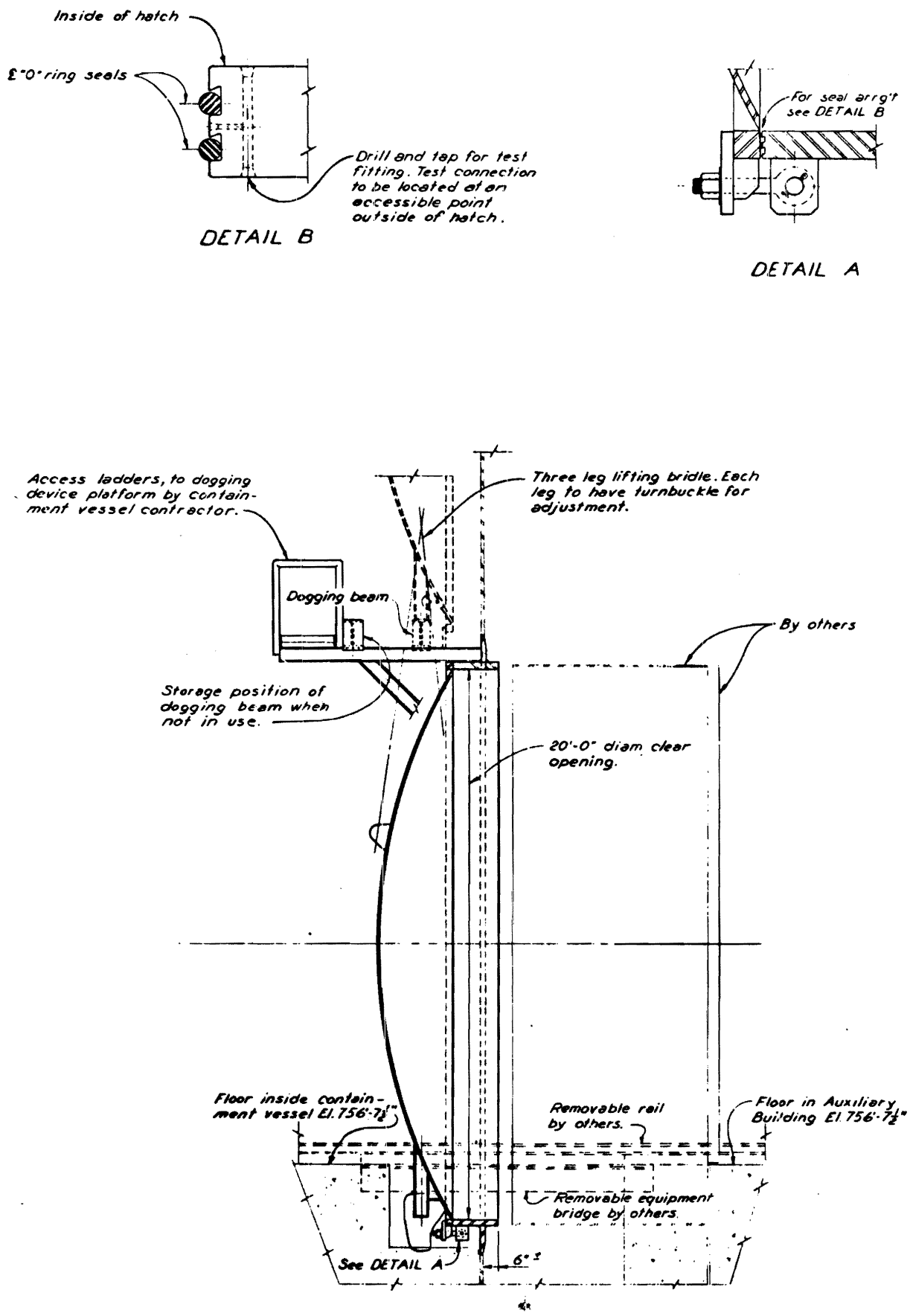

Figure 6.2.4-12 Type XIV, Equipment Hatch

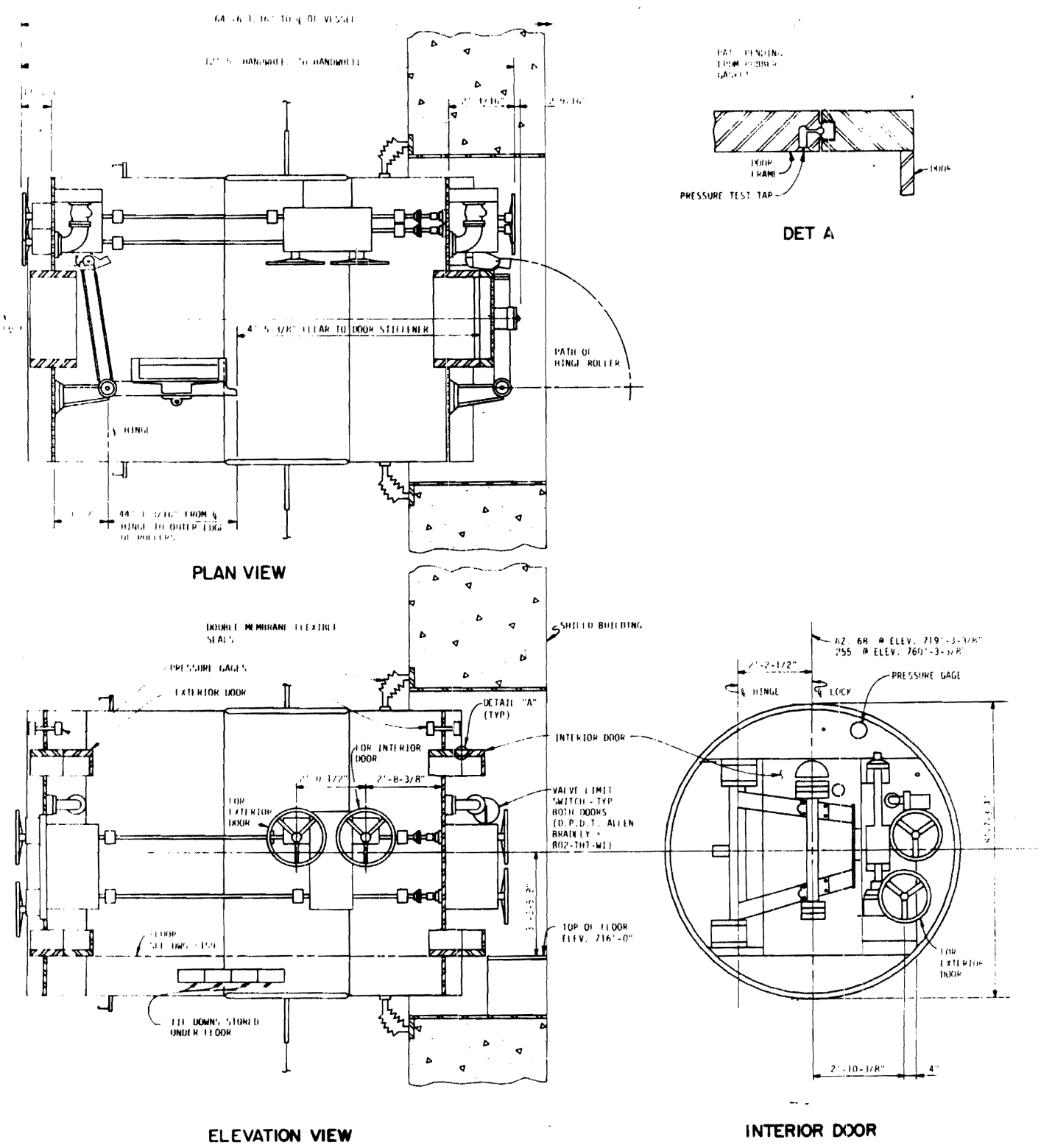

Figure 6.2.4-13 Type XV, Personnel Access

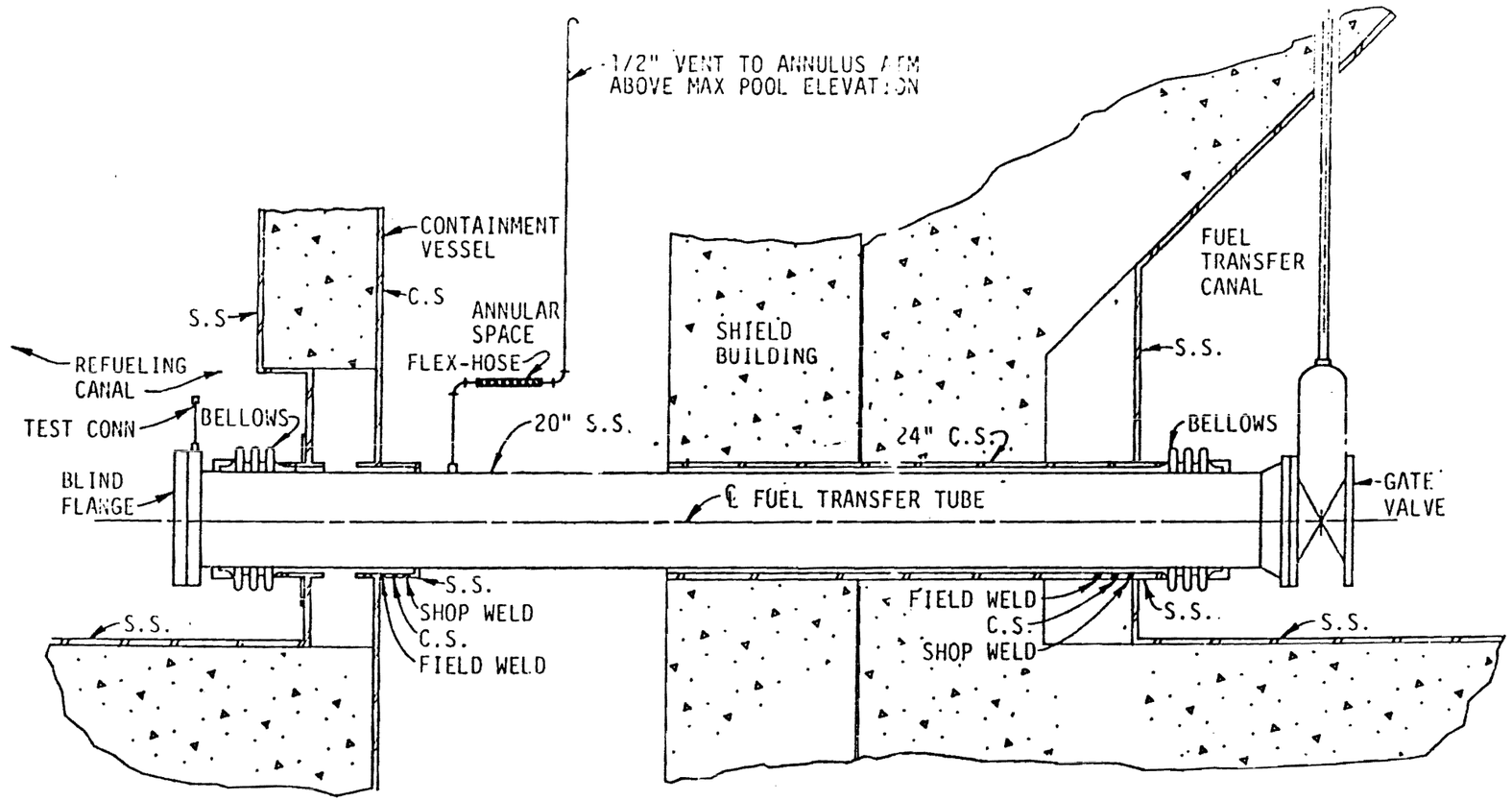

Figure 6.2.4-14 Type XVI, Fuel Transfer Tube

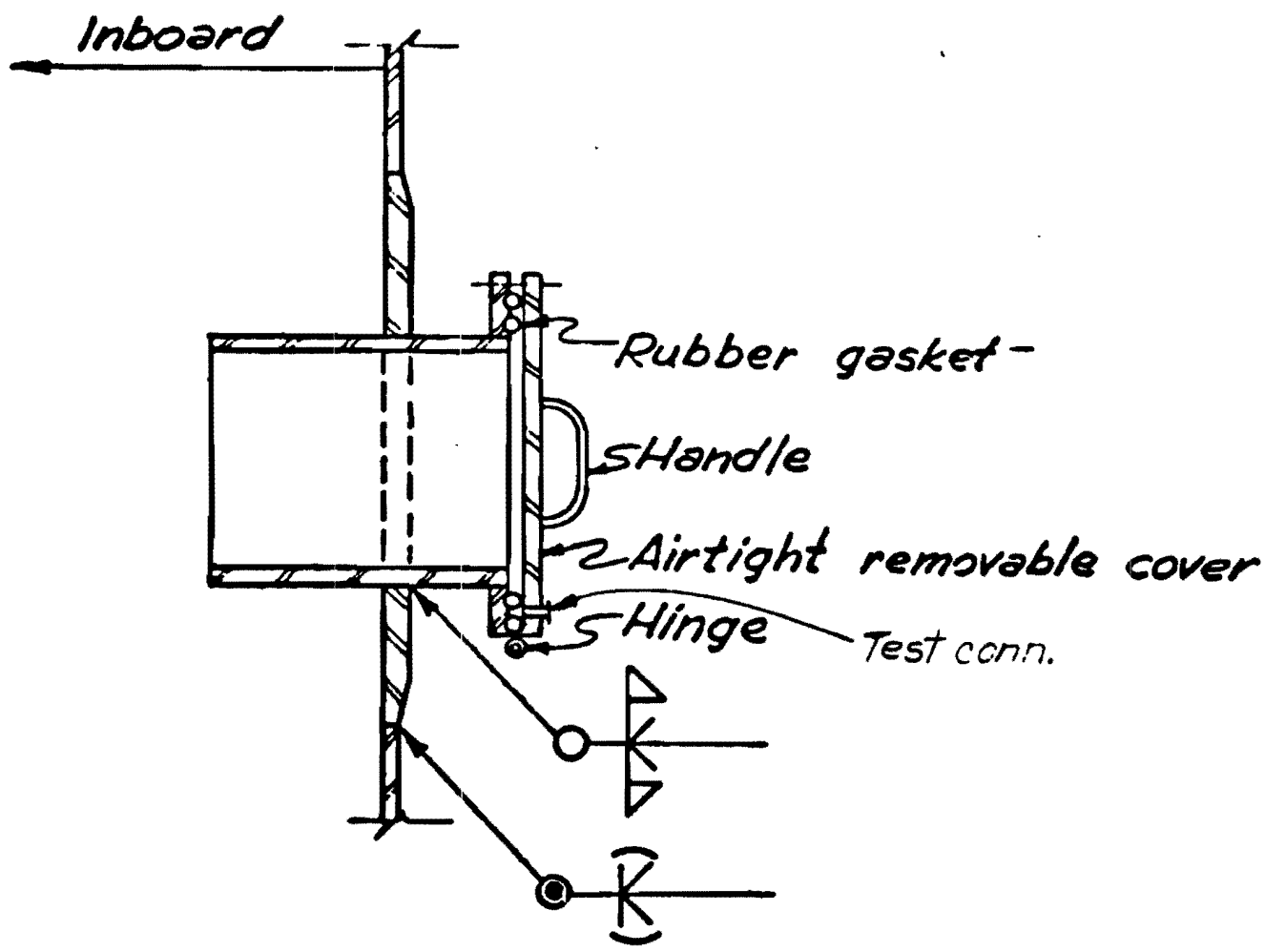

Figure 6.2.4-15 Type XVII, Thimble Renewal Line

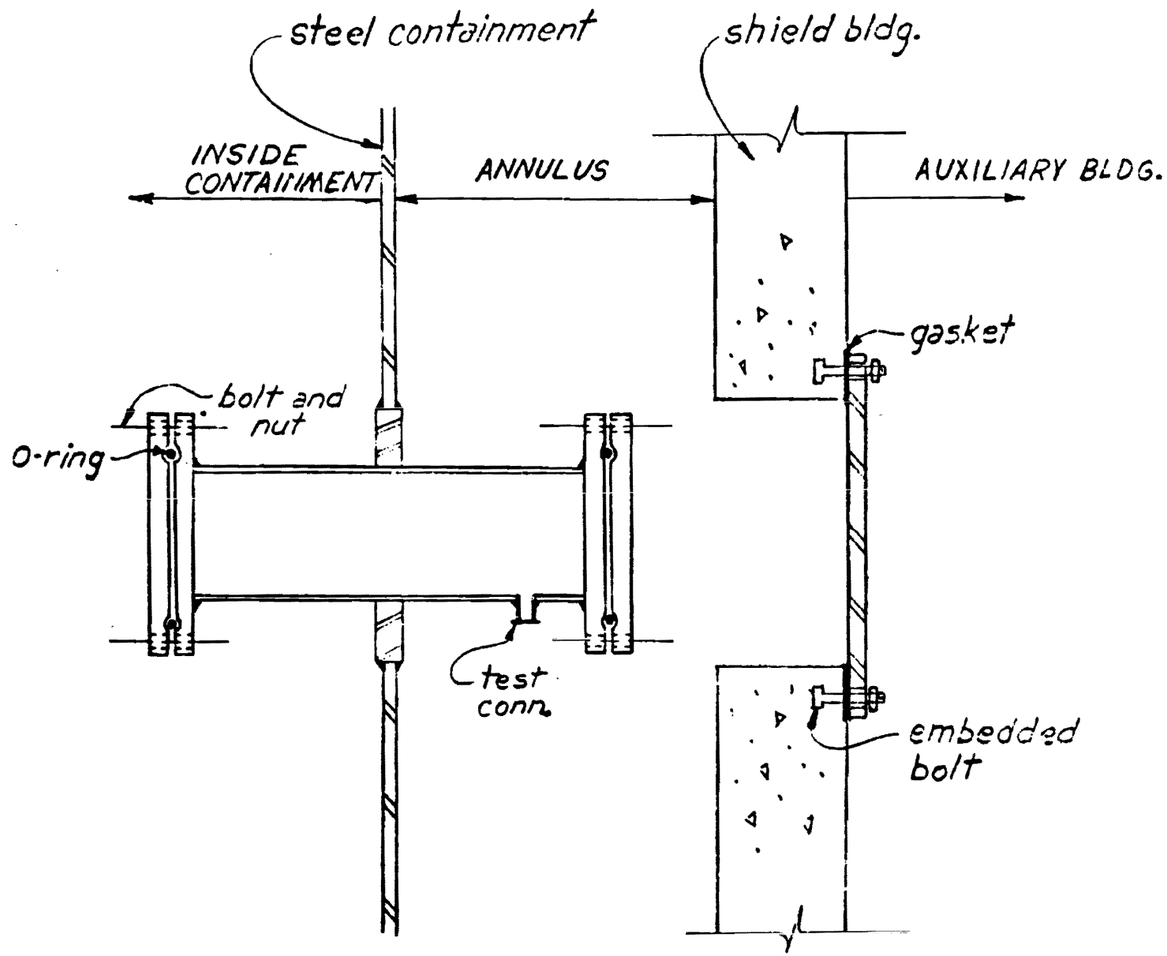

Figure 6.2.4-16 Type XVIII, Ice Blowing Line

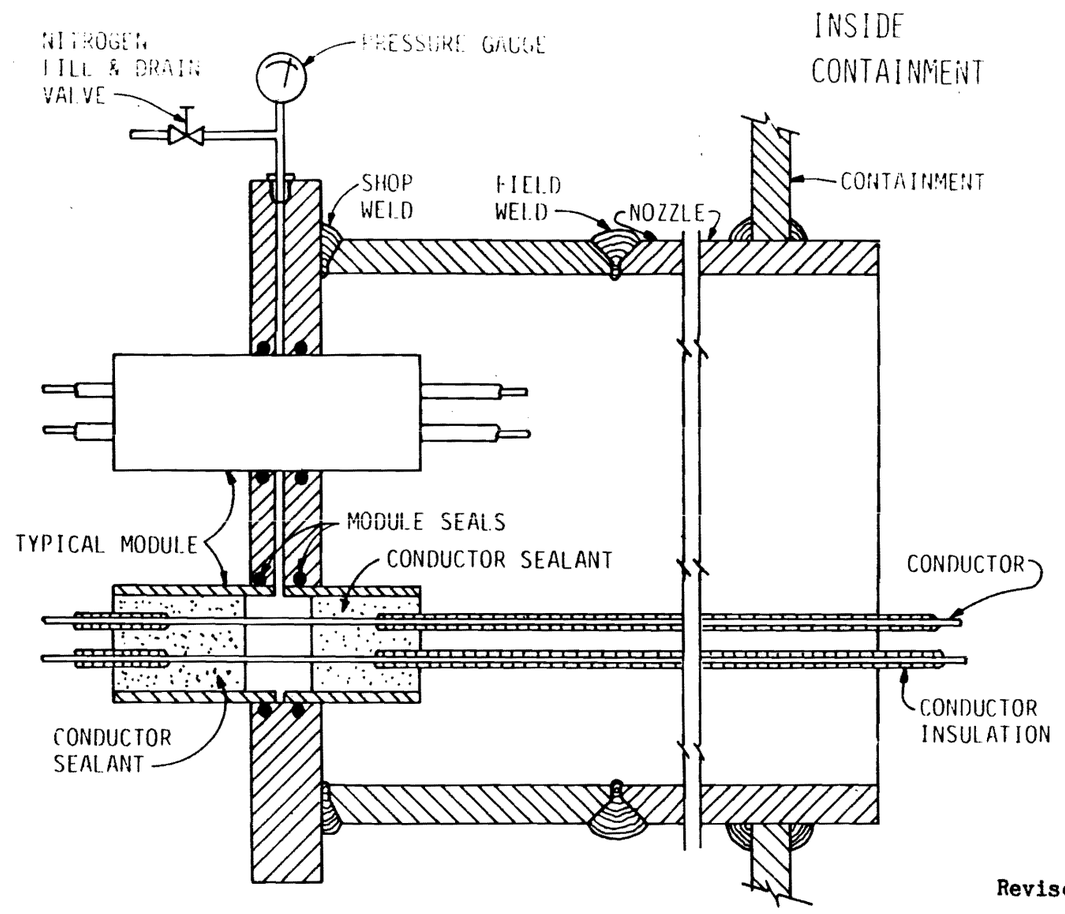

Revised by Amendment 52

WATTS BAR NUCLEAR PLANT
FINAL SAFETY
ANALYSIS REPORT

TYPE XIX
ELECTRICAL PENETRATION
FIGURE 6.2.4-17

Figure 6.2.4-17 Type XIX, Electrical Penetration

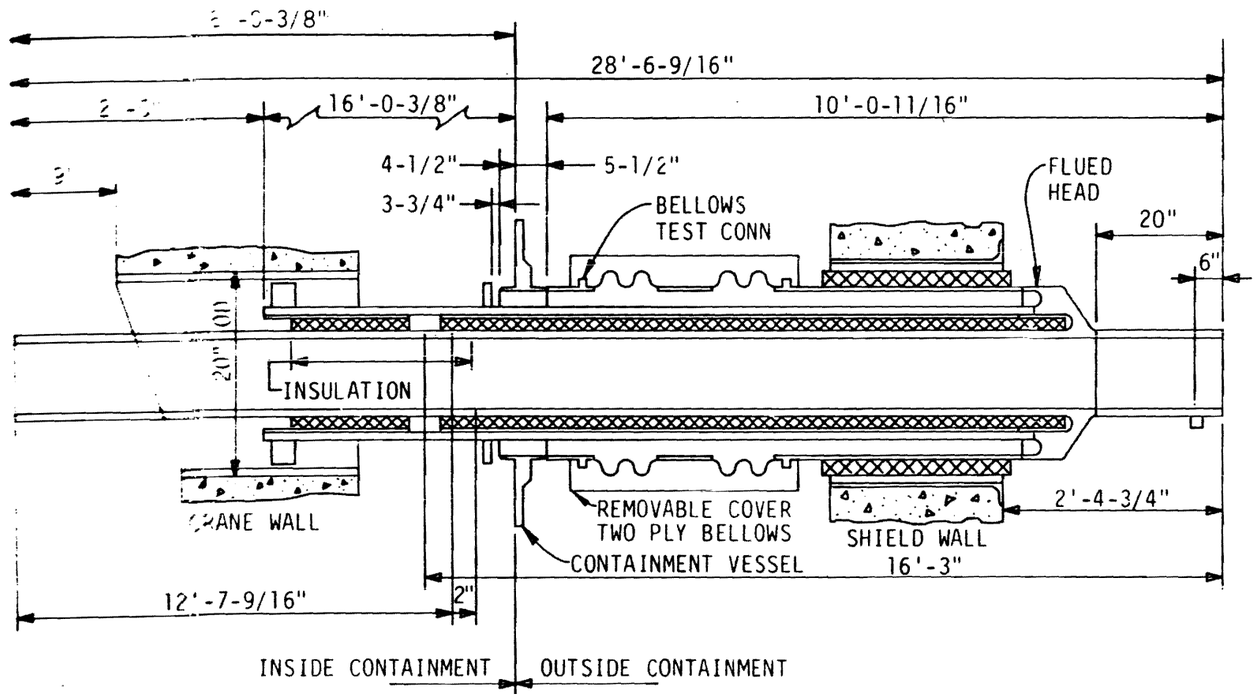

Figure 6.2.4-17A Type XX Feedwater Bypass Penetrations X-8A, X-8B, X-8C, X-8D

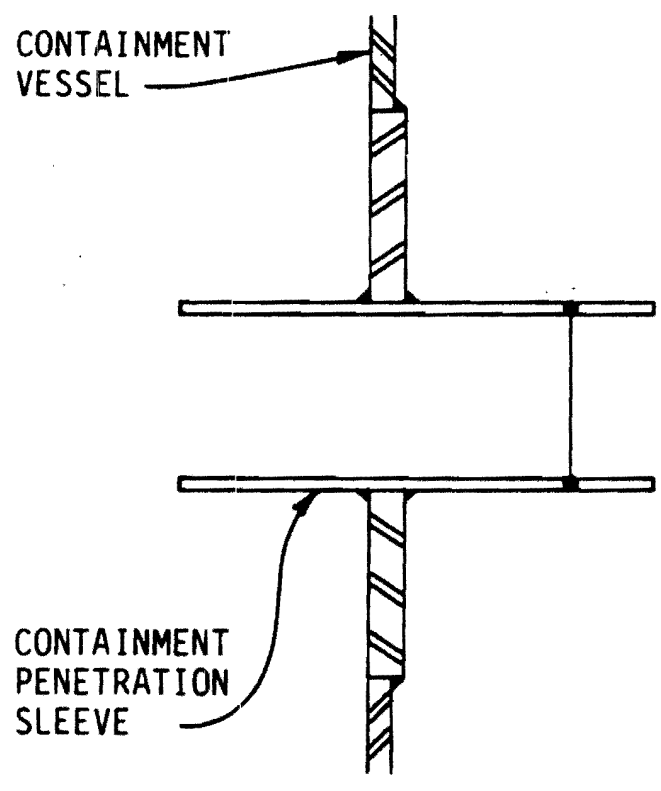

Added by Amendment 52

Figure 6.2.4-17B Type XXI, Upper And Lower Cont ERCW Supply And Return CCW From Excess Letdown Heat Exchanger and from Pump Odolers

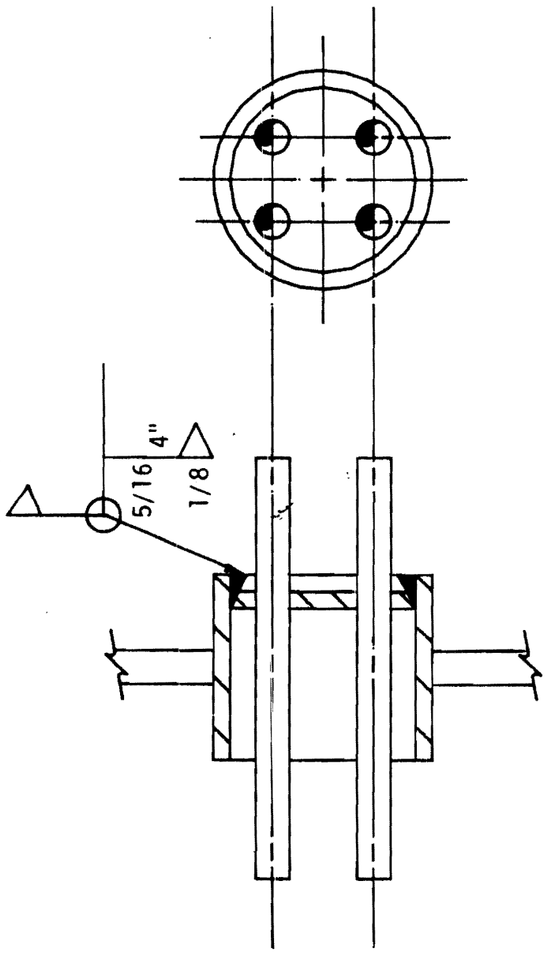

Figure 6.2.4-17C Type XXII Multi Line Penetration X-39

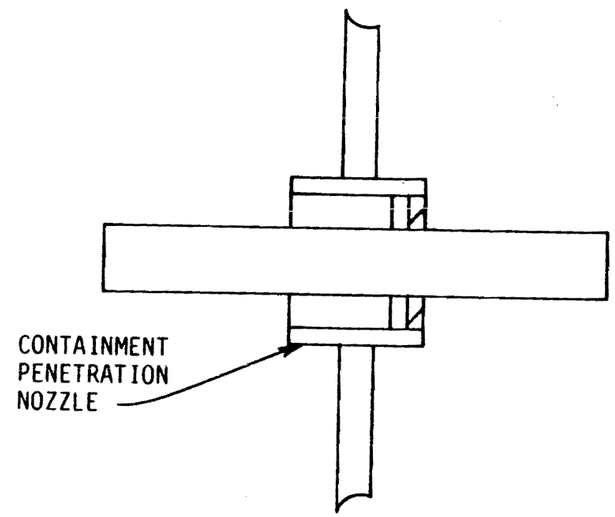

Added by Amendment 52

Figure 6.2.4-17D Type XXIII Instrument Room Chilled H20 Supply and Return

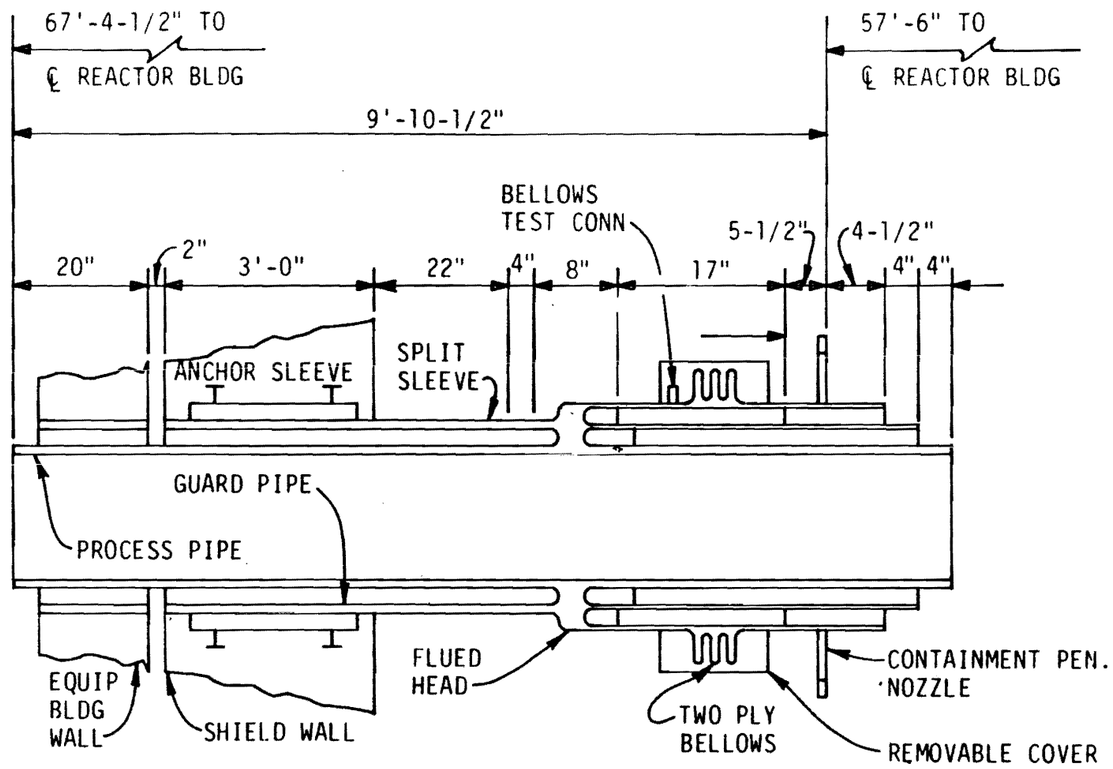

Added by Amendment 52

Figure 6.2.4-17E Type XXIV UHI X-I08, X-109

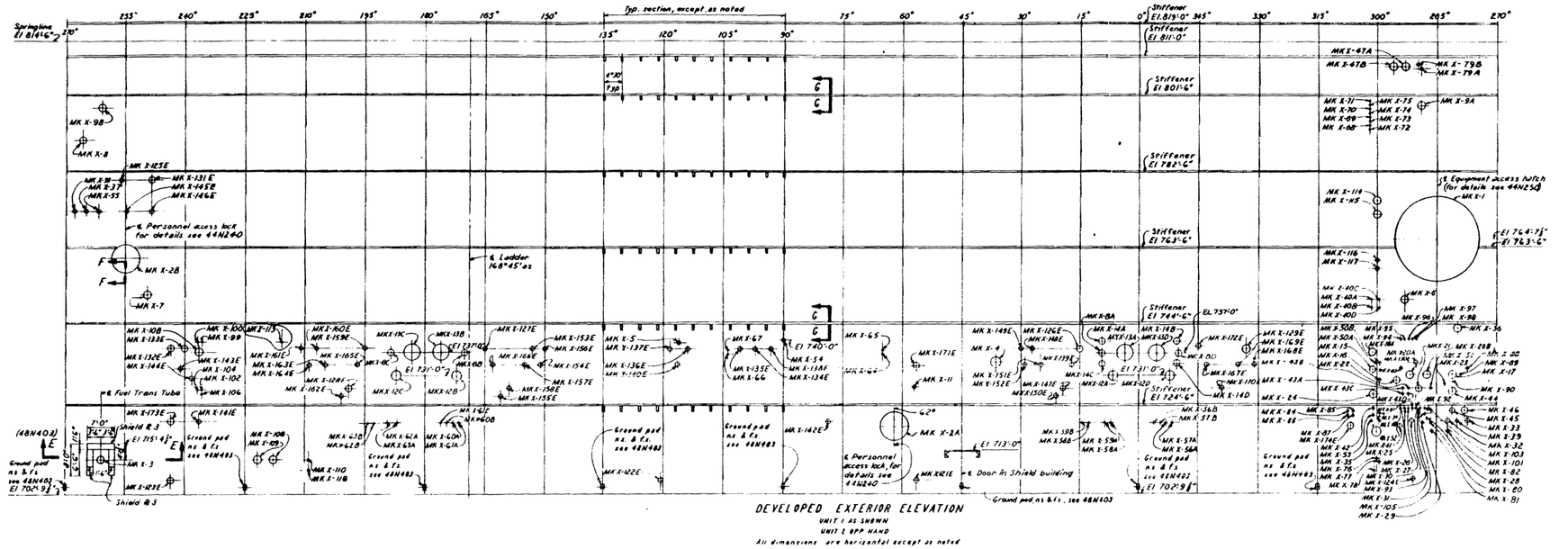

Revised by Amendment 52

Figure 6.2.4-18 Mechanical Containment Penetrations

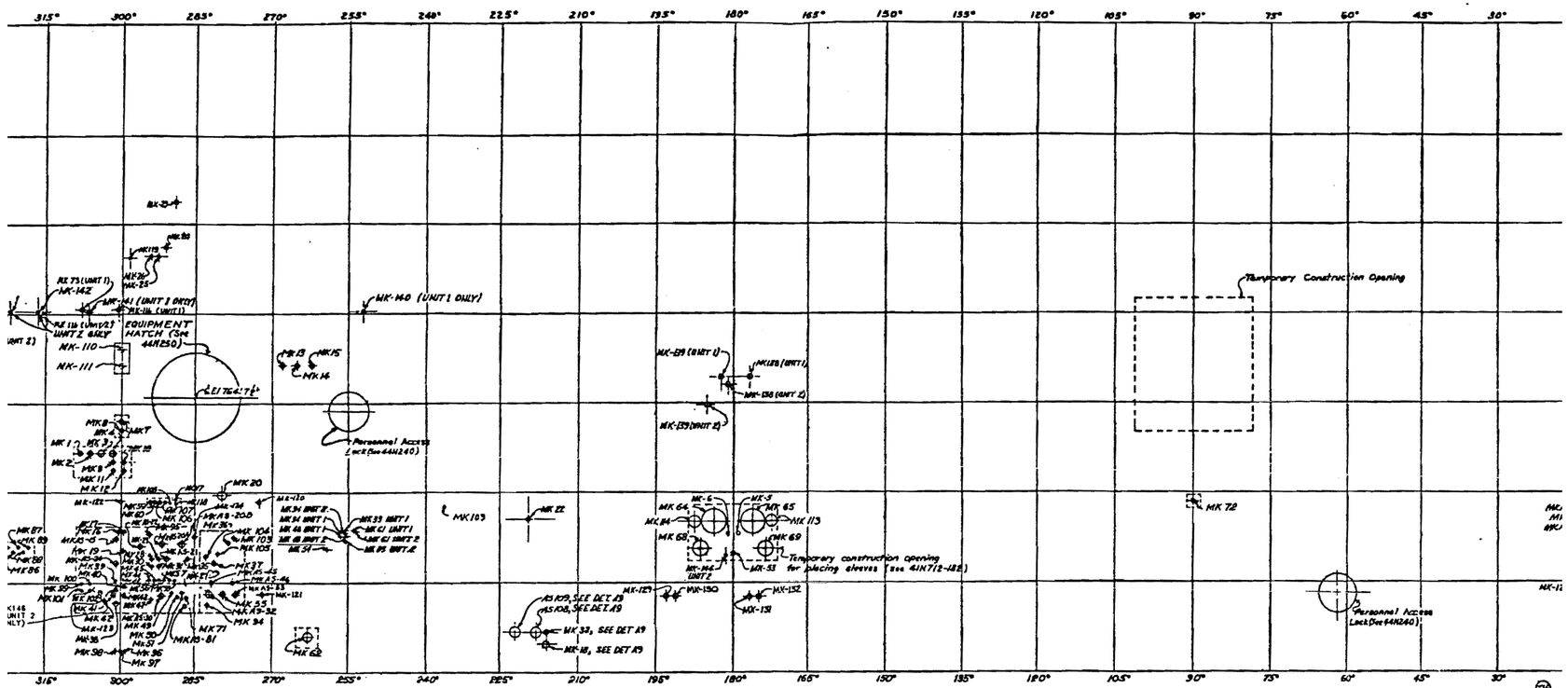

DEVELOPED EXTERIOR ELEVATION
UNIT 1 AS SHOWN
UNIT 2 OPP HAND
(About & between Units)

SLEEVE DATA

Sleeve Mk. No.	Penetration No.	Pipe Size	Sleeve Size	Length	Azimuth	Elevation	Qty Unit 1	Qty Unit 2	System	R.M. Mk. No.
[illegible]	[illegible]	[illegible]	[illegible]	[illegible]	315°-30'	752'-0"	1	1	RHR SPRAY	65
[illegible]	[illegible]	[illegible]	[illegible]	[illegible]	315°-0'	752'-0"	1	1	RHR SPRAY	65
[illegible]	[illegible]	[illegible]	[illegible]	[illegible]	315°-0'	752'-0"	1	1	CONTAINMENT SPRAY	45
[illegible]	[illegible]	[illegible]	[illegible]	[illegible]	315°-30'	752'-0"	1	1	CONTAINMENT SPRAY	45
[illegible]	[illegible]	[illegible]	[illegible]	[illegible]	315°-0'	731'-6"	1	1	CONTROL AIR	75
[illegible]	[illegible]	[illegible]	[illegible]	[illegible]	315°-0'	731'-6"	1	1	CONTROL AIR	75
[illegible]	[illegible]	[illegible]	[illegible]	[illegible]	315°-0'	760'-0"	1	1	SPARE	45
[illegible]	[illegible]	[illegible]	[illegible]	[illegible]	315°-0'	750'-0"	1	1	MAINTENANCE PART BET CD	45
[illegible]	[illegible]	[illegible]	[illegible]	[illegible]	315°-30'	750'-3"	1	1	AUX. FEEDWATER	60
[illegible]	[illegible]	[illegible]	[illegible]	[illegible]	315°-30'	750'-3"	1	1	SPARE	65
[illegible]	[illegible]	[illegible]	[illegible]	[illegible]	315°-30'	748'-3"	1	1	AUX FEEDWATER	60
[illegible]	[illegible]	[illegible]	[illegible]	[illegible]	315°-30'	740'-3"	1	1	SERVICE AIR	65
[illegible]	[illegible]	[illegible]	[illegible]	[illegible]	315°-0'	771'-6"	1	1	SPARE	65
[illegible]	[illegible]	[illegible]	[illegible]	[illegible]	315°-0'	771'-6"	1	1	MAINTENANCE PARTS BET CD	65
[illegible]	[illegible]	[illegible]	[illegible]	[illegible]	315°-0'	771'-6"	1	1	SPARE	65
[illegible]	[illegible]	[illegible]	[illegible]	[illegible]	315°-30'	734'-6"	1	1	COMPONENT COOLING SYS	70
[illegible]	[illegible]	[illegible]	[illegible]	[illegible]	315°-30'	734'-6"	1	1	COMPONENT COOLING SYS	70
[illegible]	[illegible]	[illegible]	[illegible]	[illegible]	315°-0'	706'-6"	1	1	WET LAYUP H2O TREATMENT	BET 61 & 62
[illegible]	[illegible]	[illegible]	[illegible]	[illegible]	315°-30'	730'-6"	1	1	NOR. CHRG.	70
[illegible]	[illegible]	[illegible]	[illegible]	[illegible]	315°-0'	742'-6"	1	1	SPARE	60
[illegible]	[illegible]	[illegible]	[illegible]	[illegible]	315°-0'	731'-6"	1	1	SPARE (BET L3)	75
[illegible]	[illegible]	[illegible]	[illegible]	[illegible]	[illegible]	[illegible]	[illegible]	[illegible]	IGNITION MONITOR	65
[illegible]	[illegible]	[illegible]	[illegible]	[illegible]	315°-0'	802'-0"	1	1	ICE BLOWING (BET F3)	60
[illegible]	[illegible]	[illegible]	[illegible]	[illegible]	315°-0'	798'-0"	1	1	MAIL RETURN (BET F3)	60
[illegible]	[illegible]	[illegible]	[illegible]	[illegible]	315°-0'	796'-0"	1	1	GLYCOL IN	55
[illegible]	[illegible]	[illegible]	[illegible]	[illegible]	315°-0'	796'-0"	1	1	GLYCOL OUT	55
[illegible]	[illegible]	[illegible]	[illegible]	[illegible]	315°-30'	752'-0"			RHR RETURN	
[illegible]	[illegible]	[illegible]	[illegible]	[illegible]	315°-30'	728'-6"	1	1	TO RC PUMP SEALS	70
[illegible]	[illegible]	[illegible]	[illegible]	[illegible]	315°-0'	728'-6"	1	1	TO RC PUMP SEALS	70
[illegible]	[illegible]	[illegible]	[illegible]	[illegible]	315°-30'	727'-0"	1	1	TO RC PUMP SEALS	70

SLEEVE DATA

Sleeve Mk. No.	Penetration No.	Pipe Size	Sleeve Size	Length	Azimuth	Elevation	Qty Unit 1	Qty Unit 2	System	R.M. Mk. No.
31	H434	2"	6"	3'-0"	292°-0'	727'-0"	1	1	TO RC PUMP SEALS	70
32	X110		6"	3'-0"	216°-0'	711'-6"			SPARE	-
33		**	3"	3'-0"	[illegible]	[illegible]			I & C (47N425-16)	80
34	X-REC	**	3"	3'-0"	[illegible]	734'-6"			I & C (47N425-16)	80
35	X51		10"	3'-0"	284°-30'	728'-6"	1	1	SPARE	60
36	X28	3/4"	3"	3'-0"	238°-0'	729'-0"	1	1	POST ACCIDENT SAMPLING	80
37	X44	4"	12"	3'-0"	287°-30'	727'-6"	1	1	OBIL WATER OUT	55
38	X107	SEE 47N838-1			300°-30'	717'-11½"			RWR SUPPLY	
39	X42	3"	6"	3'-0"	307°-0'	723'-6"	1	1	PRIM WTR TO PRT	70
40	X52	6"	10"	3'-0"	299°-30'	722'-6"	1	1	COMPONENT COOLING SYS	60
41	X53	6"	10"	3'-0"	301°-0'	721'-6"	1	1	COMPONENT COOLING SYS	60
42	X35	6"	10"	3'-0"	301°-30'	720'-6"	1	1	COMPONENT COOLING SYS	60
43	X34	2"	6"	3'-0"	299°-30'	720'-6"	1	1	CONTROL AIR	65
44	X26	**	6"	3'-0"	294°-0'	723'-6"	1	1	I & C	65
45	X26		8"	3'-0"	293°-0'	723'-6"	1	1	SPARE	65
46	X27	**	8"	3'-0"	292°-0'	723'-6"	1	1	I & C	65
47	X41	2"	6"	3'-0"	294°-0'	719'-6"	1	1	FLOOR SUMP PMP DISCH	70
48		**	3"	3'-0"	[illegible]	739'-3"			I & C (47N425-16)	80
49	X31	6"	10"	3'-0"	289°-30'	722'-0"	1	1	FIRE PROTECTION	60
50	X29	6"	10"	3'-0"	288°-30'	720'-0"	1	1	COMPONENT COOLING SYS	60
51			3"	3'-0"	287°-30'	727'-0"	1	1	SPARE (BET L3)	80
52	NONE		8"	3'-0"	0°-0'	729'-6"	1	1	SPARE	65
53	NONE		8"	3'-0"	180°-0'	729'-6"	1	1	SPARE	65
54	X28	**	4"	3'-0"	259°-0'	730'-8"	1	1	I & C (47N425-16)	75
55	X39	**	10"	3'-0"	280°-0'	720'-6"	1	1	I & C	60
56	X41	2"	6"	3'-0"	294°-6"	723'-6"	1	1	CONTROL AIR	70
57	X92		10"	3'-0"	290°-0'	725'-6"	1	1	SPARE	60
58	X93	3/8"	3"	3'-0"	209°-0'	723'-6"	1	1	I & C	80
59	X96	**	6"	3'-0"	294°-0'	741'-0"	1	1	CONT SAMPLE	70
60	X95	**	6"	3'-0"	295°-0'	741'-0"	1	1	CONT SAMPLE RETURN	70

SLEEVE DATA

Sleeve Mk. No.	Penetration No.	Pipe Size	Sleeve Size	Length	Azimuth	Elevation	Qty Unit 1	Qty Unit 2	System	R.M. Mk. No.
61		**	3"	3'-0"	[illegible]	[illegible]			I & C (47N425-16)	80
62	X8	20"	24"		315°-0'	711'-2½"	1	1	FUEL TRANSFER - DET A3	65
63	X130	32"	66" BY OTHERS (See Unit 2)		315°-0'	737'-0"	1	1	MAIN STEAM - DETAIL C3	
64	X131	32"	66" BY OTHERS (See Unit 2)		315°-0'	737'-0"	1	1	MAIN STEAM - DETAIL C3	
65	X132	32"	66" BY OTHERS (See Unit 2)		315°-0'	737'-0"	1	1	MAIN STEAM - DETAIL C3	
66	X134	32"	66" BY OTHERS (See Unit 2)		315°-0'	737'-0"	1	1	MAIN STEAM - DETAIL C3	
67	X129	16"	40" BY OTHERS (See Unit 2)		315°-0'	731'-0"	1	1	FEEDWATER - DETAIL C3	
68	X127	16"	40" BY OTHERS (See Unit 2)		315°-0'	731'-0"	1	1	FEEDWATER - DETAIL C3	
69	X128	16"	40" BY OTHERS (See Unit 2)		315°-0'	731'-0"	1	1	FEEDWATER - DETAIL C3	
70	X126	16"	40" BY OTHERS (See Unit 2)		315°-0'	731'-0"	1	1	FEEDWATER - DETAIL C3	
71	X80		8"	3'-0"	286°-30'	720'-0"	1	1	SPARE	65
72	X54		8"	3'-6"	90°-0'	740'-0"	1	1	TO HOLD TANK (See Detail B3)	88
73	NONE	[illegible]	4"	3'-0"	[illegible]	[illegible]			I & C - ECTS SENSOR	75
74	X62A	8"	10"	3'-0"	7°-0'	706'-6"	1	1	LOWER CONT ERCW SUPPLY	60
75	X63A	8"	10"	3'-0"	5°-0'	706'-6"	1	1	LOWER CONT ERCW RETURN	60
76	X64A	8"	10"	3'-0"	9°-0'	706'-6"	1	1	LOWER CONT ERCW RETURN	60
77	X60A	8"	10"	3'-0"	11°-0'	706'-6"	1	1	LOWER CONT ERCW SUPPLY	60
78	X59A	6"	10"	3'-0"	354°-0'	708'-0"	1	1	LOWER CONT ERCW RETURN	60
79	X58A	6"	10"	3'-0"	349°-30'	708'-6"	1	1	LOWER CONT ERCW SUPPLY	60
80	X56A	6	10"	3'-0"	348°-0'	708'-0"	1	1	LOWER CONT ERCW SUPPLY	60
81	X57A	6"	10"	3'-0"	339°-0'	706'-6"	1	1	LOWER CONT ERCW RETURN	60
82	X71	2"	6"	3'-0"	225°-0'	730'-0"	1	1	UPPER CONT ERCW RETURN	75
83	X76	2"	6"	3'-0"	324°-0'	731'-0"	1	1	UPPER CONT ERCW SUPPLY	75
84	X70	2"	6"	3'-0"	323°-0'	730'-0"	1	1	UPPER CONT ERCW RETURN	75
85	X75	2"	6"	3'-0"	322°-6"	731'-0"	1	1	UPPER CONT ERCW SUPPLY	75
86	X69	2"	6"	3'-0"	321°-0'	730'-0"	1	1	UPPER CONT ERCW SUPPLY	75
87	X73	2"	6"	3'-0"	320°-0'	730'-0"	1	1	UPPER CONT ERCW RETURN	75
88	X68	2"	6"	3'-0"	319°-0'	730'-0"	1	1	UPPER CONT ERCW SUPPLY	75
89	X72	2"	6"	3'-0"	318°-0'	731'-0"	1	1	UPPER CONT ERCW RETURN	75
90	X66	2"	6"	3'-0"	252°30'	706'-6"	1	1	INST RM CH WATER RETURN	70

SLEEVE DATA

Sleeve Mk. No.	Penetration No.	Pipe Size	Sleeve Size	Length	Azimuth	Elevation	Qty Unit 1	Qty Unit 2	System	R.M. Mk. No.
91	X67	2"	6"	3'-0"	256°-0'	708'-0"	1	1	INST RM CH WATER SUPPLY	70
92	X64	2"	6"	3'-0"	257°-0'	708'-0"	1	1	INST RM CH WATER RETURN	70
93	X65	2"	6"	3'-0"	255°30'	706'-6"	1	1	INST RM CH WATER SUPPLY	70
94	X82	6"	10"	3'-0"	262°30'	718'-0"	1	1	[illegible]	60
95	X83	6"	8"	3'-0"	294°-0'	783'-0"	1	1	[illegible]	65
96	X77	2"	6"	3'-0"	299°-0'	708'-9"	1	1	DEMIN WATER	70
97	X76	2"	6"	3'-0"	300°-0'	708'-9"	1	1	SERVICE AIR	70
98	X78	6"	8"	3'-0"	301°-0'	708'-9"	1	1	FIRE PROTECTION	70
99	X84	**	6"	3'-0"	307°-30'	723'-0"	1	1	GAS ANALYZER	70
100	X86	**	6"	3'-0"	306°-0'	723'-0"	1	1	I & C SAMPLE	70
101	X86	**	6"	3'-0"	307°30'	721'-6"	1	1	I & C SAMPLE	70
102	X87	**	6"	3'-0"	306°-0'	721'-6"	1	1	I & C SAMPLE	70
103	X88	4"	8"	3'-0"	277°-30'	733'-0"	1	1	FIRE PROTECTION	65
104	X89	4"	8"	3'-0"	278°-30'	732'-0"	1	1	FIRE PROTECTION	65
105	X90	2"	4"	3'-0"	280°-30'	729'-6"	1	1	CONTROL AIR	75
106	X96		6"	3'-0"	292°-0'	747'-6"	—	1	SPARE	70
107	X97		8"	3'-0"	294°-0'	747'-6"	1	1	SPARE	80
108	X98	[illegible]	3"	3'-0"	290°-0'	747'-6"	1	1	SPARE	80
109	X99	[illegible]	3"	3'-0"	236°-0'	740'-0"	1	1	SPARE	80
110	X114	2"	6"	3'-0"	300°-0'	773'-0"	1	1	GLYCOL FLOOR COOLING	70
111	X115	2"	6"	3'-0"	300°-0'	771'-6"	1	1	GLYCOL FLOOR COOLING	70
112	X84	6"	30"	3'-0"	—	737'-0"	1	1	FEEDWATER - DETAIL C3	88
113	X83	6"	30"	3'-0"	—	737'-0"	1	1	FEEDWATER - DETAIL C3	88
114	X80	6"	30"	3'-0"	—	737'-0"	1	1	FEEDWATER - DETAIL C3	88
115	X83	6"	30"	3'-0"	—	737'-0"	1	1	FEEDWATER - DETAIL C3	88
116	NONE	[illegible]	4"	3'-0"	[illegible]	[illegible]			I & C - ECTS SENSOR	75
					(CONT ON SHEET 7)					

UNIT 1 ONLY

Amendment 89

Figure 6.2.4-19 Powerhouse Reactor Unit 1 & 2 Mechanical Sleeves-Shield Building

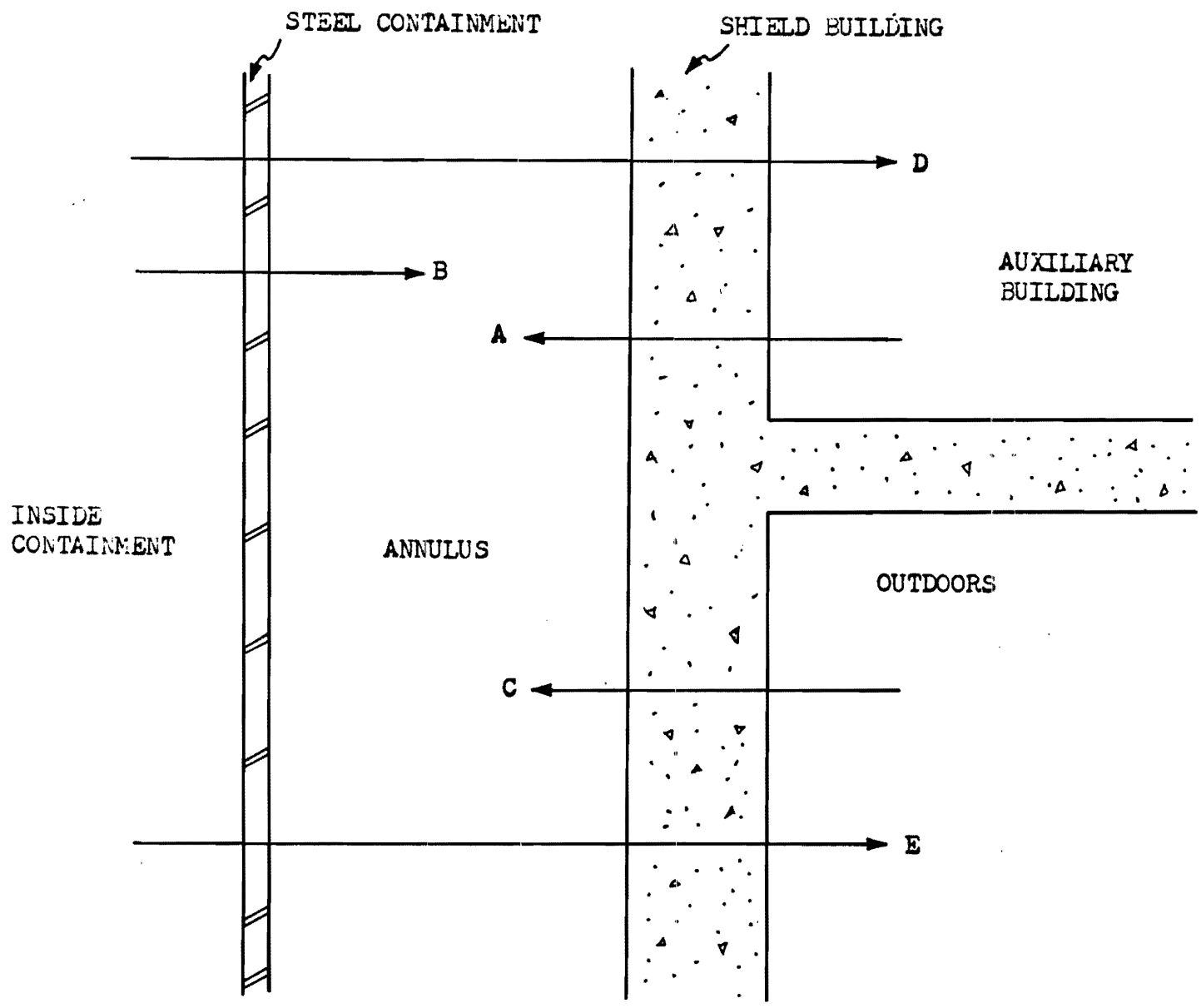

Figure 6.2.4-20 Schematic Diagram of Leakage Paths

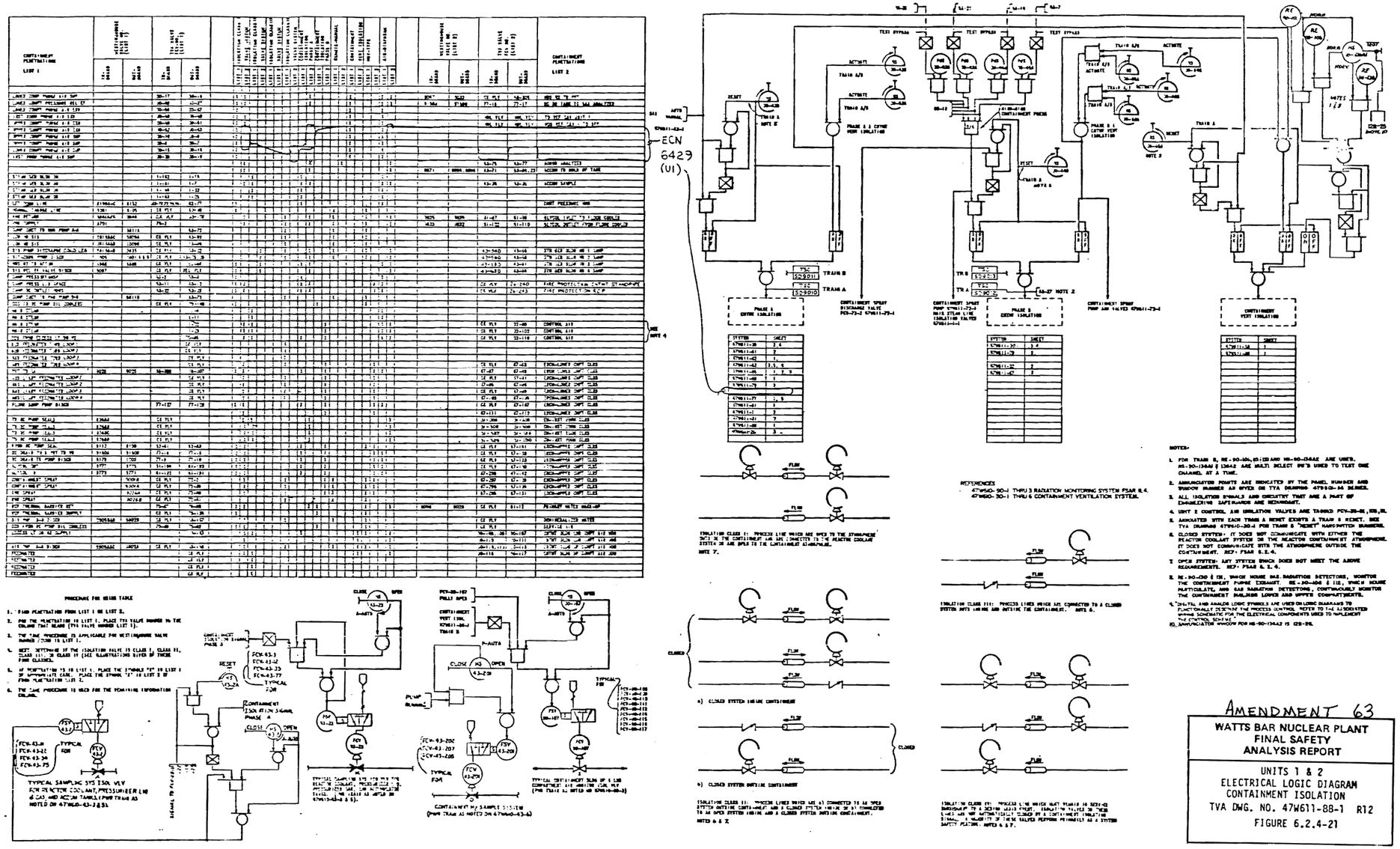

AMENDMENT 63

WATTS BAR NUCLEAR PLANT
FINAL SAFETY
ANALYSIS REPORT

UNITS 1 & 2
ELECTRICAL LOGIC DIAGRAM
CONTAINMENT ISOLATION
TVA DWG. NO. 47W611-88-1 R12
FIGURE 6.2.4-21

Figure 6.2.4-21 Electrical Logic Diagram Containment Isolation

Figure 6.2.4-22A through 6.2.4-22II
Deleted by Amendment 65

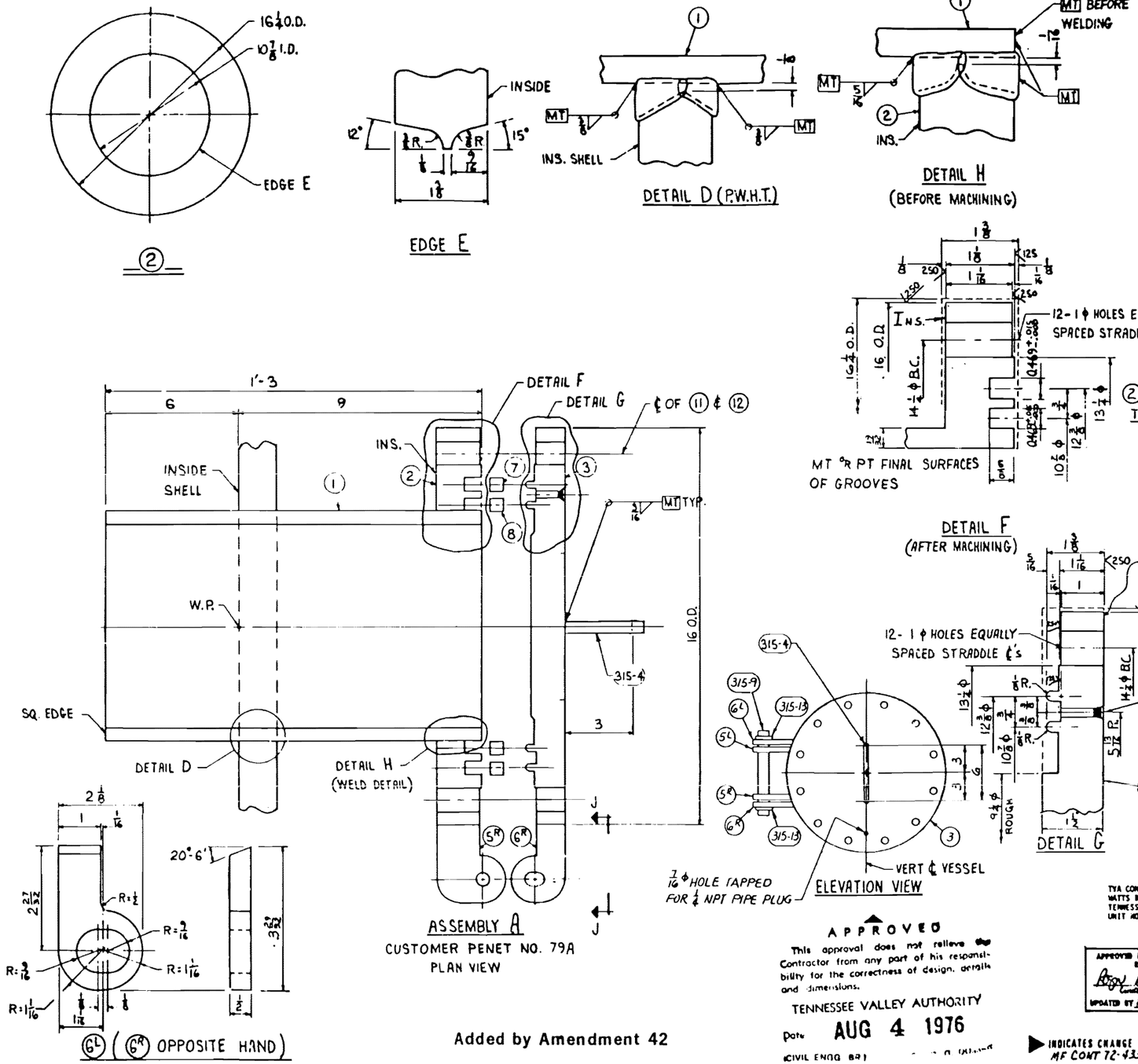

	317-A		(1) PENET. ASSY (TO BE INSTALLED BY SHOP IN SHELL ASSY 270-A)					226
	317-1	1	Pc. 10 ϕ SCH 80 S_{M_L} S_{T_L} P_{D_E} P_{B_E}	1	3⅛	MS 821	A	82
	317-2	1	PL 16 O.D. X 1¼ (P_{B_N}) X 10⅞ I.D. (S_{N} 43-1 ⅙)			MS 821	A	41
	317-3	1	PL 16 ϕ X 1¼ (P_{B_N}) (S_{N} 322-1 ⅙)			MS 821	A	86
	315-4	1	PL ½ ϕ L_{N_T} (S_{N} L.O.)	1	0	MS 822	C	1
	317-5R	2	PL SK X ½ (S_{N} L.O.)			MS 822	C	2
	317-6R	2	PL SK X ½ (S_{N} L.O.)			MS 822	C	3
	317-7	1	GASKET ⅛ ϕ IN ONE CONTINUOUS LENGTH OF 3'-2 ⅞			*	D	1
	317-8	1	GASKET ⅛ ϕ IN ONE CONTINUOUS LENGTH OF 2'-10 ⅞			*	D	1
	315-9	1	1 ϕ ROD W/ HOLES	0	7⅛	A36	—	2
	315-10	2	¼ ϕ COTTER PIN	0	2	C.S.	—	1
	317-11	12	⅞ ϕ STUD BOLT (TFL) UNC-2A	0	4¼	MS 821	A	4
	317-12	24	⅞ ϕ HVY SEMI FIN HEX NUT UNC-2B			MS 822	A	4
	315-13	2	PLAIN WASHERS FOR 1 ϕ BOLT			C.S.	—	—

MS 732 (SA 333 GR 6) * EPDM (PRESRAY COMPOUND 603)
MS 6003 (SA 516 GR 70)
MS 821 (SA 193 GR B7)
MS 822 (SA 194 GR 7)

Added by Amendment 42

APPROVED
This approval does not relieve the Contractor from any part of his responsibility for the correctness of design, details and dimensions.
TENNESSEE VALLEY AUTHORITY
Date AUG 4 1976
(CIVIL ENGG BR)

TVA CONTRACT NO. 73C61-75320
WATTS BAR NUCLEAR PLANT
TENNESSEE VALLEY AUTHORITY
UNIT NO. 2 SPRING CITY, TENNESSEE

APPROVED PER NUCLEAR G.A. MANUAL RELEASED FOR USE
Approved by 3-7-79 Date
UPDATED BY 86 REV. 2 DATE 7-21-76

▶ INDICATES CHANGE FROM PREVIOUS ISSUE
MF CONT 72-4333, REV 1

WATTS BAR NUCLEAR PLANT
FINAL SAFETY
ANALYSIS REPORT

ICE BLOWING AND NEGATIVE
RETURN LINES - BLIND FLANGE
DETAILS
FIGURE 6.2.4-23

Figure 6.2.4-23 Ice Blowing and Negative Return Lines - Blind Flange Details

6.2.5 Combustible Gas Control in Containment

Following a design basis accident, hydrogen may be generated within the containment as a result of:

(1) Zirconium-water reaction involving the fuel cladding and the reactor coolant.

(2) Radiolytic decomposition of water in the core.

(3) Radiolytic decomposition of water in the containment sump.

(4) Corrosion of materials within the containment.

Hydrogen generation following the design basis accident is described in Section 15.4.1.2.

Two independent monitoring systems are provided to measure hydrogen in the containment atmosphere.

Two electric hydrogen recombiners are provided to remove hydrogen from the containment atmosphere and prevent the formation of combustible gas mixtures. A hydrogen mitigation system, provided to accommodate hydrogen released from a degraded core accident, is described in Section 6.2.5A.

6.2.5.1 Design Bases

(1) The generation and accumulation of combustible gases determined for design of containment combustible gas control equipment are based on the NRC-TID release model, described in NRC Regulatory Guide 1.7.

(2) Each hydrogen recombiner has a flow rate of 100 scfm. At least one recombiner should be started in a timely manner following a loss-of-coolant accident.

(3) Mixing of containment atmosphere following a loss-of-coolant accident (LOCA) is provided by the air return fan system described in Section 6.8.

(4) The combustible gas control system is designed to preclude loss of capability through a single failure in the system.

(5) The combustible gas control system is designed to sustain all normal loads as well as accident loads, including seismic loads, and temperature and pressure transients from a loss-of-coolant accident.

(6) The combustible gas control system is protected from damage by missiles or jet impingement from broken pipes.

(7) The combustible gas control system is located away from high velocity airstreams or is protected from direct impingement of high velocity air streams by suitable barriers.

(8) The combustible gas control system is designed for a lifetime consistent with that of the reactor plant.

(9) All materials used in the fabrication of the hydrogen recombiners were selected to be compatible with the conditions inside the reactor containment during normal operation and during accident conditions.

(10) The combustible gas control system is designed for periodic testing and inspection.

(11) A redundant hydrogen sampling system is designed to detect and give indication in the main control room (MCR) of the presence and concentration of hydrogen in the primary containment atmosphere subsequent to a LOCA.

6.2.5.2 System Design

The sampling system for the hydrogen analyzer consists of a 3/8-inch sampling line taking samples from the upper and lower compartments and penetrating primary containment to connect to the hydrogen analyzer system. This line is equipped with two normally closed, solenoid operated, remote manually controlled, isolation valves. Upon actuation of the system the containment atmosphere is drawn through a series of sample conditioners including a trap, moisture separator, and filter prior to entering the analyzer. The sample is returned to primary containment via a 3/8-inch line. The return line is also equipped with two remote manually controlled isolation valves, normally closed. The analyzer is designed to operate under the conditions of pressure, temperature, humidity and radiation associated with a LOCA. The analyzer is calibrated to measure hydrogen concentrations between zero and ten percent with an indicated accuracy in the MCR of ∀ 1.4% hydrogen concentration by volume. Remote indication and control are provided in the MCR. The sampling system including lines is completely redundant and independent. A functional block diagram of the containment gas monitor subsystem is shown on Figure 6.2.5-6.

The design of the sampling system for the hydrogen analyzer is Seismic Category I, and conforms to ASME Section III, Class 2, and Section IX requirements, except the oxygen supply bottles, associated manifolds, and vacuum trap assemblies (see Table 3.2-2a); ANSI B16.5, B16.11, B31.1, and N45.2 requirements; and the applicable requirements of the ASTM and IEEE. The hydrogen analyzer panels and all internal components are classified as Class 1E instruments qualified to IEEE 323-1971.

The combustible gas control system consists of two electric hydrogen recombiner units, located in the upper containment compartment. Each recombiner is provided with a separate power panel, control panel, and each is powered from a separate safeguard bus. The power panels are located in the Auxiliary Building. Each panel is in an area that is accessible following a loss-of-coolant accident. The control panel for each unit is located in the MCR.

Figure 6.2.5-1 is a sketch of the recombiner unit. The recombiner unit consists of a preheater section, a heater-recombination section, and an exhaust section.

Containnment air is drawn into the unit by natural convection, passing first through the preheater section. This section consists of the annular space between the heater-recombination section duct and the external housing. The temperature of the incoming air is increased by heat transferred from the heater-recombination section. This results in a reduction of heat losses from the unit. The preheated air passes through an orifice plate and enters the heater-recombination section. This section consists of a thermally insulated vertical metal duct enclosing five assemblies of metal-sheathed electrical heaters. Each heater assembly contains individual heating elements, and the operation of the unit is virtually unaffected by the failure of a few individual heating elements. The incoming air is heated to a temperature in the range of 1150 to 1400EF, where recombination of hydrogen and oxygen occurs.

Finally, the air from the heater-recombination section enters the exhaust section where it is mixed with cooler containment air and discharged from the unit.

The unit is manufactured of corrosion resistant, high temperature material except for the base which is carbon steel. The electric hydrogen recombiner uses commercial type electric resistance heaters sheathed with Incoloy-800 which is an excellent corrosion resistant material for this service. These recombiner heaters operate at significantly lower power densities than in commercial practice.

The external metal housing of the recombiner prevents the entry of containment spray water into the electrical sections of the unit.

The electric hydrogen recombiner is a natural convection, flameless, thermal reactor-type hydrogen/oxygen recombiner. It heats a continuous stream of air/hydrogen mixture to a temperature sufficient for spontaneous recombination of the hydrogen with the oxygen in the air to form water vapor. The process is not the result of a catalytic surface effect but occurs as a result of the increased temperature of the process gases. The performance of the unit is, therefore, unaffected by fission products or other impurities which might poison a catalyst.

The power panel for each recombiner unit is located outside the reactor containment in an area accessible after a loss-of-coolant accident. The panel contains an isolation transformer plus a controller to regulate power input to the recombiner. For equipment test and periodic checkout, a thermocouple readout instrument is also provided in the MCR control panel for monitoring temperatures in the recombiner. To control the recombination process, the correct power input to bring the recombiner above the threshold temperature for recombination is set on the controller. The controller setting is accomplished at the control panel, and power input is monitored by a wattmeter. This predetermined power setting covers variation in containment temperature, pressure, and hydrogen concentration in the post-loss-of-coolant accident environment.

The applicable codes used in the design of the combustible gas control system and its components are given in Sections 3.2 and 3.11.

Results of testing a prototype of the electric hydrogen recombiner are given in Reference [1].

The basic design parameters for the electric hydrogen recombiners are given in Table 6.2.5-1.

A failure mode and effects analysis of the combustible gas control system is given in Table 6.2.5-2.

The electric hydrogen recombiners are manually operated from the MCR (no special plant protection system signals are required to actuate the system). The operating range of the hydrogen recombiner system is 0 to 4.0% hydrogen by volume. The recombiner system shall be manually activated within 24 hours to preclude hydrogen concentration exceeding the lower flammability limit of 4.0% by volume.

The air return fan system starts automatically 9 + 1 minutes after the receipt of a Phase B isolation signal. In addition, the fans may be started manually.

The Westinghouse hydrogen recombiners have undergone extensive testing in a range of environmental conditions similar to conditions which would be found in the post-LOCA containment. There are essentially no differences between the recombiners that were tested and the ones that have been supplied for use in the Watts Bar Nuclear Plant. These tests are described in Reference [1]. No additional system equipment other than qualified piping and valves are exposed to accident conditions.

Mixing of the containment atmosphere is accomplished by the containment air return fan system. The associated ductwork, which must remain intact following a LOCA to assure that no localized hydrogen concentration exceeds 4%, consists of: (1) two 12-inch ducts (one associated with each air return fan intake) which draw air from the containment dome region, (2) one 8-inch duct which circles the containment removing air from accumulator rooms and other dead-ended spaces and terminates at each air return fan housing, (3) two 12-inch ducts which circle the crane wall, removing air from the steam generator and pressurizer compartments and terminate through two 8-inch ducts at each air return fan housing, (4) two 8-inch pipes (one connected to each air return fan housing) which remove air from above the refueling canal, and (5) the main duct between the upper and lower compartment through the divider deck, including the non-return dampers.

The ductwork described above is embedded in concrete, where possible, to prevent damage from buildup of pressure during a LOCA. Ductwork not protected by embedment is designed to withstand the LOCA environment. Rapid pressure buildup in ductwork in the upper containment compartment is prevented by non-return dampers which prevent the high pressure LOCA effluent flowing from lower to upper compartment without going through the ice condenser. Large pressure differentials on the return fan, housing and duct joints are prevented. Figures 6.2.5-3, 6.2.5-4, and 6.2.5-5 are provided to show the routing of the recirculation ducts.

6.2.5.3 Design Evaluation

The prediction of hydrogen following the loss-of-coolant accident shows that although the hydrogen production rate decreases with time after the accident, total hydrogen accumulation can exceed the lower flammability limit of 4 volume percent unless the recombiners are turned on in a timely manner.

For the purpose of showing that the electric recombiner is capable of maintaining safe hydrogen concentrations, analysis was performed using the Regulatory Guide 1.7 model. The Regulatory Guide 1.7 model is based upon assuming a fission product activity release specified in TID-14844 and the values for post-accident hydrogen generation specified in the guide.

Figure 6.2.5-7 shows the post-LOCA containment hydrogen concentration versus time with one recombiner unit started 24 hours after the accident. Figure 6.2.5-7a shows the hydrogen concentration with the recombiner started at 3.0 volume percent containment hydrogen concentration per Regulatory Guide 1.7.

Each electric recombiner is capable of continually processing a minimum of 100 scfm of containment atmosphere. Substantially all of the hydrogen contained in the processed atmosphere is converted to steam, thus reducing the overall containment hydrogen concentration. The hydrogen concentration in the containment was calculated for the model described above based on a recombiner capability of 100 scfm of containment atmosphere. This calculation shows that the maximum hydrogen concentration is less than the lower flammability limit of 4 volume percent if the recombiner is started at a containment hydrogen concentration of 3 volume percent following the accident. Therefore, one of these units meets the design criterion of maintaining a safe hydrogen concentration with considerable margin, and the second unit provides the redundance of a system of equal capability on a redundant power supply.

6.2.5.4 Testing and Inspections

The combustible gas control system is subjected to periodic testing and inspection to demonstrate its availability. The preoperational performance test is conducted after the system has been installed and prior to the initial fuel loading. This test includes functional checks of all components. The objective of the preoperational performance test is to demonstrate the capability of each recombiner to operate at a minimum flow rate of 100 scfm with the containment atmosphere at the normal ambient conditions.

6.2.5.5 Instrumentation Application

This recombiner does not require any instrumentation inside the containment for proper operation after a loss-of-coolant accident. Thermocouples are provided for convenience in testing and periodic checkout of the recombiners, but are not necessary to assure proper operation of the recombiners. Proper recombiner operation after an accident is assured by measuring the amount of electric power to the recombiner from a control panel outside the containment. The proper amount of airflow through the recombiner is fixed by the orifice plate built into the recombiner.

6.2.5.6 Materials

The outer structure of the hydrogen recombiner is constructed of 300-series stainless steel. The inner structure is constructed of Inconel-600. The heating elements are tubular type consisting of a magnesium oxide insulated nichrome wire encased in an Inconel-800 jacket. All exposed surfaces are corrosion resistant to the constituents of the post LOCA containment atmosphere. Since the recombination reaction is a thermal effect only, catalytic poisoning is not a consideration. A prototype of the recombiner has been successfully tested under simulated post LOCA containment atmosphere conditions as described in Reference [1]. The total weight of the recombiner unit is approximately 6200 lbs.

6.2.5A Hydrogen Mitigation System

6.2.5A.1 Design Basis

The hydrogen mitigation system (HMS) is designed to increase the containment capability to accommodate hydrogen that could be released during a degraded core accident. This system which is based on the concept of controlled ignition using thermal igniters has been designed to be redundant, capable of functioning in a postaccident environment, seismically supported, and capable of actuation from the main control room. In addition, the system is designed to have an ample number of igniters distributed throughout the containment to mitigate the effects of hydrogen releases in containment.

6.2.5A.2 System Description

To assure that any hydrogen released would be ignited at any containment location as soon as the concentration exceeded the lower flammability limit, durable thermal igniters capable of maintaining an adequate surface temperature are used. An igniter developed by Tayco Engineering, operating at a nominal plant voltage of 120V ac, is used. The igniter has been shown by experiment to be capable of maintaining surface temperatures in excess of the required minimum for extended periods, initiating combustion, and continuing to operate in various combustion environments.

The igniters in the HMS are equally divided into two redundant groups, each with independent and separate controls, power supplies, and locations, to ensure adequate coverage even in the event of a single failure. Manual control of each group of igniters is provided in the main control room and the status (on-off) of each group is indicated there. A separate train of Class 1E 480V ac auxiliary power is provided for each group of igniters and is backed by automatic loading onto the diesel generators upon loss of offsite power. Each individual circuit powers two igniters.

To assure adequate spatial coverage, 68 igniters are distributed throughout the various regions of the containment in which hydrogen could be released or to which it could flow in significant quantities (see Figure 6.2.5A-1 through 6.2.5A-5). There are at least two igniters, controlled and powered redundantly located in each of these regions. Following a degraded core accident, any hydrogen which is produced is released into the lower compartment inside the crane wall. To cover this region, 22 igniters (equally divided between trains) are provided. Eight of these are distributed on

the reactor cavity wall exterior and crane wall interior at an intermediate elevation to ensure the partial burning that accompanies upward flame propagation. Two igniters are located at the lower edge of each of the five enclosures for the four steam generators and the pressurizer, two in the top of the pressurizer enclosure, and another pair above the reactor vessel in the cavity. These 22 lower compartment igniters prevent flammable mixtures from entering the ice condenser. Any hydrogen not burned in the lower compartment is carried up through the ice condenser and into its upper plenum. Since steam is removed from the mixture as it is passed through the ice bed, mixtures that were nonflammable in the lower compartment tend to be flammable in the ice condenser upper plenum. This phenomenon is supported by the CLASIX containment analysis code which predicts more sequential burns to occur in the upper plenum than in any other region. Therefore, the system is designed to take advantage of the favorable combustion characteristics of the upper plenum by the provision of 16 igniters equally spaced around it. Four igniters are located around the upper compartment dome, four at intermediate elevations on the outside of the steam generator enclosures, four more around the top inside of the crane wall, and one above each of the two air return fans. The air return fans provide recirculation flow from the upper compartment through several dead-ended compartments (see Section 6.2.1.3.3) back into the main part of the lower compartment. To cover this region, there are pairs of igniters in each of the eight rooms (a total of 16 igniters) through which the recirculation flow passes. The location of the HMS igniters is shown in Figures 6.2.5A-1 through 6.2.5A-5.

The components of the HMS inside containment are seismically supported and will maintain functional capability under postaccident conditions.

6.2.5A.3 Operation

The HMS is energized manually from the main control room following any accident upon the occurrence of any condition which indicates inadequate core cooling. This is done without waiting for a potential hydrogen buildup.

6.2.5A.4 Safety Evaluation

The HMS due to its igniter type and locations, redundancy, capability of functioning in a post-accident environment, seismic support, main control room actuation, and remote surveillance, performs its intended function in a manner that provides adequate safety margins. The containment structures can survive the effects of credible degraded core accidents when hydrogen hazards are mitigated by HMS.

6.2.5A.5 Testing

Surveillance testing for the HMS consists of energizing the system from the main control room and taking voltage and current readings from each circuit at the distribution panels located in the Auxiliary Building. These readings are then compared to acceptance criteria developed from testing at Watts Bar Nuclear Plant and TVA's central laboratory facility to determine whether or not both igniters on each circuit are operational. This form of testing does not require containment entry. The operability of at least 33 of the 34 igniters per train would conservatively guarantee an effective coverage throughout the containment.

REFERENCES

(1) WCAP-7820, Supplement 1, "Electrical Hydrogen Recombiner for Water Reactor Containments," dated May 1972.

Table 6.2.5-1 Electric Hydrogen Recombiner Typical Parameters

Power (Maximum)	75 kW*	
Capacity (Minimum)	100 scfm	
Heaters		
	Number	5
	Heater Surface Area/Heater	35 ft^2
	Maximum Heat Flux	2850 Btu/hr-ft^2
		or 5.8 Watts/in^2
Gas Temperature		
	Inlet	80 to 155 EF
	In Heater Section	1150 to 1400 EF
Materials		
	Outer Structure	300-Series Stainless Steel
	Inner Structure	Inconel-600
	Heater Element Sheath	Incoloy-800
Dimensions		
	Height	9 ft
	Width	4.5 ft
	Depth	5.5 ft
Weight	6200 lb	

* Power is controlled by a semiconductor controlled rectifier.

Table 6.2.5-2 Combustible Gas Control System Failure Mode and Effects Analysis (Page 1 of 12)

No.	Component Identification	Function	Failure Mode	Potential Cause	Method of Failure Detection	Effect on System	Effect on Plant	Remarks
1.	Emergency power to Train A	Provide power to hydrogen analyzer	Power Train A fails	Loss of power at 480V Reactor MOV Board 1A2-A	Power indicating light locally or annunciation	Loss of monitoring capability	None-redundant subsystem	Only one train is required to monitor hydrogen concentration
2.	Hydrogen analyzer system 1-H_2AN-43-200 (Train A)	To detect and provide remote continuous indication of presence and concentration of H_2 in the primary containment atmosphere within 30 minutes after a DBA	Fails	See analyzer internal component analyses (Item Nos. 6-14 in this table)				
3.	Emergency power to Train B	Provide power to hydrogen analyzer	Power Train B fails	Loss of power at 480V Reactor MOV Board 1B2-B	Power indicating light locally or annunciation	Loss of monitoring capability	None-redundant subsystem	Only one train is required to monitor hydrogen concentration
4.	Hydrogen analyzer system 1-H_2AN-43-210 (Train B)	To detect and provide remote continuous indication of presence and concentration of H_2 in the primary containment atmosphere within 30 minutes after a DBA	Fails	See analyzer internal component analyses (Item Nos. 6-14 in this table)				
5.	Shut-off valves (inlet and outlet)	Manually isolates hydrogen analyzer subsystem from containment	Closed	Left closed during maintenance	Low cell flow indication in MCR	Loss of monitoring capability	None-redundant system	Manual valve used during maintenance

Table 6.2.5-2 Combustible Gas Control System Failure Mode and Effects Analysis (Page 2 of 12)

No.	Component Identification	Function	Failure Mode	Potential Cause	Method of Failure Detection	Effect on System	Effect on Plant	Remarks
6.	Sample cooler	Cools sample gas to approximately 150°F	Plugged		Low cell flow indication in MCR	Loss of monitoring capability	None-redundant subsystem	
7.	Pressure regulator (R_1)	Maintains downstream vacuum to provide a constant sample gas pressure for the hydrogen analyzer	Closed	Plugged	Low cell flow indication in MCR	Loss of monitoring capability	None-redundant subsystem	
			Open	Mechanical failure	Conflicting hydrogen concentration indications in MCR	Incorrect hydrogen concentration indications	None-redundant subsystem	Operator action would be required to determine which train was indicating correctly
8.	Sample pump	Draws a gas sample from containment and returns sample gas to containment	Broken diaphragm	Mechanical failure or sample cooler failure	Low cell flow indication in MCR	Loss of monitoring capability	None-redundant subsystem	

Table 6.2.5-2 Combustible Gas Control System Failure Mode and Effects Analysis (Page 3 of 12)

No.	Component Identification	Function	Failure Mode	Potential Cause	Method of Failure Detection	Effect on System	Effect on Plant	Remarks
9.	Pump motor	Drives sample pump	Shorted stator	Fuse blow	Low cell flow indication in MCR	Loss of monitoring capability	None-redundant subsystem	
			Broken shaft	Mechanical failure	Low cell flow indication in MCR	Loss of monitoring capability	None-redundant subsystem	
10.	Moisture separator	Provide a dry gas sample to the hydrogen analyzer	Plugged inlet	Mechanical failure	Low cell flow indication in MCR	Loss of monitoring capability	None-redundant subsystem	
			Plugged gas outlet	Mechanical failure	Low cell flow indication in MCR	Loss of monitoring capability	None-redundant subsystem	
			Plugged moisture outlet	Mechanical failure	Low cell flow indication in MCR	Loss of monitoring capability	None-redundant subsystem	Analyzer would be flooded

Table 6.2.5-2 Combustible Gas Control System Failure Mode and Effects Analysis (Page 4 of 12)

No.	Component Identification	Function	Failure Mode	Potential Cause	Method of Failure Detection	Effect on System	Effect on Plant	Remarks
11.	Pressure regulator (R_3)	Regulates cell flow in conjunction with fixed orifice	Closed	Plugged	Low cell flow indication in MCR	Loss of monitoring capability	None-redundant subsystem	
			Open	Mechanical failure	Conflicting hydrogen concentration indications in MCR	Incorrect hydrogen concentration indications	None-redundant subsystem	Operator action would be required to determine which train was indicating correctly
12.	Fixed orifice	Regulates cell in conjunction with fixed orifice	Closed	Plugged	Low cell flow indication in MCR	Loss of monitoring capability	None-redundant subsystem	
13.	Hydrogen analyzer	Determines percent of hydrogen in the sample gas	Closed	Plugged	Low cell flow indication in MCR	Loss of monitoring capability	None-redundant subsystem	
14.	Pressure regulator (R_2)	Maintains moisture separator condensate downstream vacuum	Closed	Plugged	Low cell flow indication in MCR	Loss of monitoring capability	None-redundant subsystem	Analyzer would be flooded
			Open	Mechanical failure	Low cell flow indication in MCR	Loss of monitoring capability	None-redundant subsystem	

Table 6.2.5-2 Combustible Gas Control System Failure Mode and Effects Analysis (Page 5 of 12)

No.	Component Identification	Function	Failure Mode	Potential Cause	Method of Failure Detection	Effect on System	Effect on Plant	Remarks
15.	FCV-43-201-A	Hydrogen sample line inboard containment isolation valve	Closed	Mechanical failure or loss of DC power or loss of hydrogen analyzer pump	Valve position indication via switch HS-43-201A HS-43-201B	Loss of monitoring capability	None-redundant subsystem	
16.	FCV-43-433-A	Hydrogen sample line outboard containment isolation valve	Closed	Mechanical failure or loss of DC power or loss of hydrogen analyzer pump	Valve position indication via switch HS-43-201A HS-43-201B	Loss of monitoring capability	None-redundant subsystem	
17.	FCV-43-202-A	Hydrogen sample line inboard containment isolation valve	Closed	Mechanical failure or loss of DC power or loss of hydrogen analyzer pump	Valve position indication via switch HS-43-202A HS-43-202B	Loss of monitoring capability	None-redundant subsystem	
18.	FCV-43-434-A	Hydrogen sample line outboard containment isolation valve	Closed	Mechanical failure or loss of DC power or loss of hydrogen analyzer pump	Valve position indication via switch HS-43-202A HS-43-202B	Loss of monitoring capability	None-redundant subsystem	
19.	Simple line Train A heat tracing	To maintain sample line temperature outside containment	Fails	Loss of power	Indicating light "Heat Trace On"	Loss of monitoring capability	None-redundant subsystem	

Table 6.2.5-2 Combustible Gas Control System Failure Mode and Effects Analysis (Page 6 of 12)

No.	Component Identification	Function	Failure Mode	Potential Cause	Method of Failure Detection	Effect on System	Effect on Plant	Remarks
20.	FCV-43-207-B	Hydrogen sample line inboard containment isolation valve	Closed	Mechanical failure or loss of DC power or loss of hydrogen analyzer pump	Valve position indication via switch HS-43-207A HS-43-207B	Loss of monitoring capability	None-redundant subsystem	
21.	FCV-43-435-B	Hydrogen sample line outboard containment isolation valve	Closed	Mechanical failure or loss of DC power or loss of hydrogen analyzer pump	Valve position indication via switch HS-43-207A HS-43-207B	Loss of monitoring capability	None-redundant subsystem	
22.	FCV-43-436-B	Hydrogen sample line outboard containment isolation valve	Closed	Mechanical failure or loss of DC power or loss of hydrogen analyzer pump	Valve position indication via switch HS-43-208A HS-43-208B	Loss of monitoring capability	None-redundant subsystem	
23.	FCV-43-208-B	Hydrogen sample line inboard containment isolation valve	Closed	Mechanical failure or loss of DC power or loss of hydrogen analyzer pump	Valve position indication via switch HS-43-208A HS-43-208B	Loss of monitoring capability	None-redundant subsystem	
24.	Sample line Train B heat tracing	To maintain sample line temperature outside containment	Fails	Loss of power	Indicating light "Heat Trace On"	Loss of monitoring capability	None-redundant subsystem	

Table 6.2.5-2 Combustible Gas Control System Failure Mode and Effects Analysis (Page 7 of 12)

No.	Component Identification	Function	Failure Mode	Potential Cause	Method of Failure Detection	Effect on System	Effect on Plant	Remarks
25.	Emergency power to Train A	Provide power to HRCS Train A	Fails	Loss of power at 480V Reactor Vent Board 1A-A	Control Room power available indicating light	HRCS Train A lost	None-redundant subsystem	Only one train is required to maintain hydrogen concentration. System is not required immediately after DBA, manually started within 24 hrs.
26.	Emergency power to Train B	Provide power to HRCS Train B	Fails	Loss of power at 480V Reactor Vent Board 1B-B	Control Room power available indicating light	HRCS Train B lost	None-redundant subsystem	Only one train is required to maintain hydrogen concentration. System is not required immediately after DBA, manually started within 24 hrs.

Table 6.2.5-2 Combustible Gas Control System Failure Mode and Effects Analysis (Page 8 of 12)

No.	Component Identification	Function	Failure Mode	Potential Cause	Method of Failure Detection	Effect on System	Effect on Plant	Remarks
27.	Hydrogen recombiner Train A	To limit hydrogen concentration within primary containment to below four volume percent (4%)	Fails	Fuse blow in power supply panel	Control Room power available indicating light	HRCS Train A lost	None-redundant subsystem	Only one train is required to maintain hydrogen concentration. System is not required immediately after DBA, manually started within 24 hrs.
				On-off MS switch thermal overload cutout	None. However HCRS failure can be verified by the wattmeter	HRCS Train A lost	None-redundant subsystem	
				Heater Assembly	Measurement of power supplied to unit	HRCS Train A lost	None-redundant subsystem	Only one train is required to maintain hydrogen concentration. System is not required immediately after DBA, manually started within 24 hrs.

Table 6.2.5-2 Combustible Gas Control System Failure Mode and Effects Analysis (Page 9 of 12)

No.	Component Identification	Function	Failure Mode	Potential Cause	Method of Failure Detection	Effect on System	Effect on Plant	Remarks
27								Only one train is required to maintain hydrogen concentration. System is not required immediately after DBA, manually started within 24 hrs.

Table 6.2.5-2 Combustible Gas Control System Failure Mode and Effects Analysis (Page 10 of 12)

No.	Component Identification	Function	Failure Mode	Potential Cause	Method of Failure Detection	Effect on System	Effect on Plant	Remarks
28.	Hydrogen recombiner Train B	To limit hydrogen concentration within primary containment to below 4% by volume	Fails	Fuse blow in power supply panel	Control Room power available indicating light	HRCS Train B lost	None-redundant subsystem	Only one train is required to maintain hydrogen concentration. System is not required immediately after DBA, manually started within 24 hrs.
				On-off MS switch thermal overload cutout	None. However, HCRS failure can be verified by the wattmeter	HRCS Train B lost	None-redundant subsystem	
				Heater Assembly	Measurement of power supplied to unit	HRCS Train B lost	None-redundant subsystem	

Table 6.2.5-2 Combustible Gas Control System Failure Mode and Effects Analysis (Page 11 of 12)

No.	Component Identification	Function	Failure Mode	Potential Cause	Method of Failure Detection	Effect on System	Effect on Plant	Remarks
28.								Only one train is required to maintain hydrogen concentration. System is not required immediately after DBA, manually started within 24 hrs.
29.	Emergency power to Train A igniters	Provide power to HMS Train A	Fails	Loss of power at 480V Cont and Aux Bldg Vent Board 1A-A	Indicating light in control room	HMS function to mitigate hydrogen lost	None-redundant subsystem	Only one train is required to mitagate hydrogen if degrated core condition occurs. System is not required immediately and activated manually by the operator

Table 6.2.5-2 Combustible Gas Control System Failure Mode and Effects Analysis (Page 12 of 12)

No.	Component Identification	Function	Failure Mode	Potential Cause	Method of Failure Detection	Effect on System	Effect on Plant	Remarks
30.	Igniters Train A (each train is made up of 34 igniters)	To ignite hydrogen concentration level of 5% to 8% by volume	Fails	Fuse blow	Indicating light Annunciator	HMS function to mitigate hydrogen lost	None-redundant subsystem	
				Distribution panel breaker trips		HMS function to mitigate hydrogen lost	None-redundant subsystem	
31.	Emergency power to Train B igniters	Provide power to HMS Train B	Fails	Loss of power at 480V Cont and Aux Bldg Vent Board 1B-B	Indicating light in control room	HMS function to mitigate hydrogen lost	None-redundant subsystem	Only one train is required to mitigate hydrogen if degraded core condition occurs. System is not required immediately and activated manually by the operator
32	Igniters Train B (each train is made up of 34 igniters)	To ignite hydrogen concentration level of 5% to 8% by volume	Fails	Fuse blow	Indicating light Annunciator	HMS function to mitigate hydrogen lost	None-redundant subsystem	
				Distribution panel breaker trips		HMS function to mitigate hydrogen lost	None-redundant subsystem	

THIS PAGE INTENTIONALLY BLANK

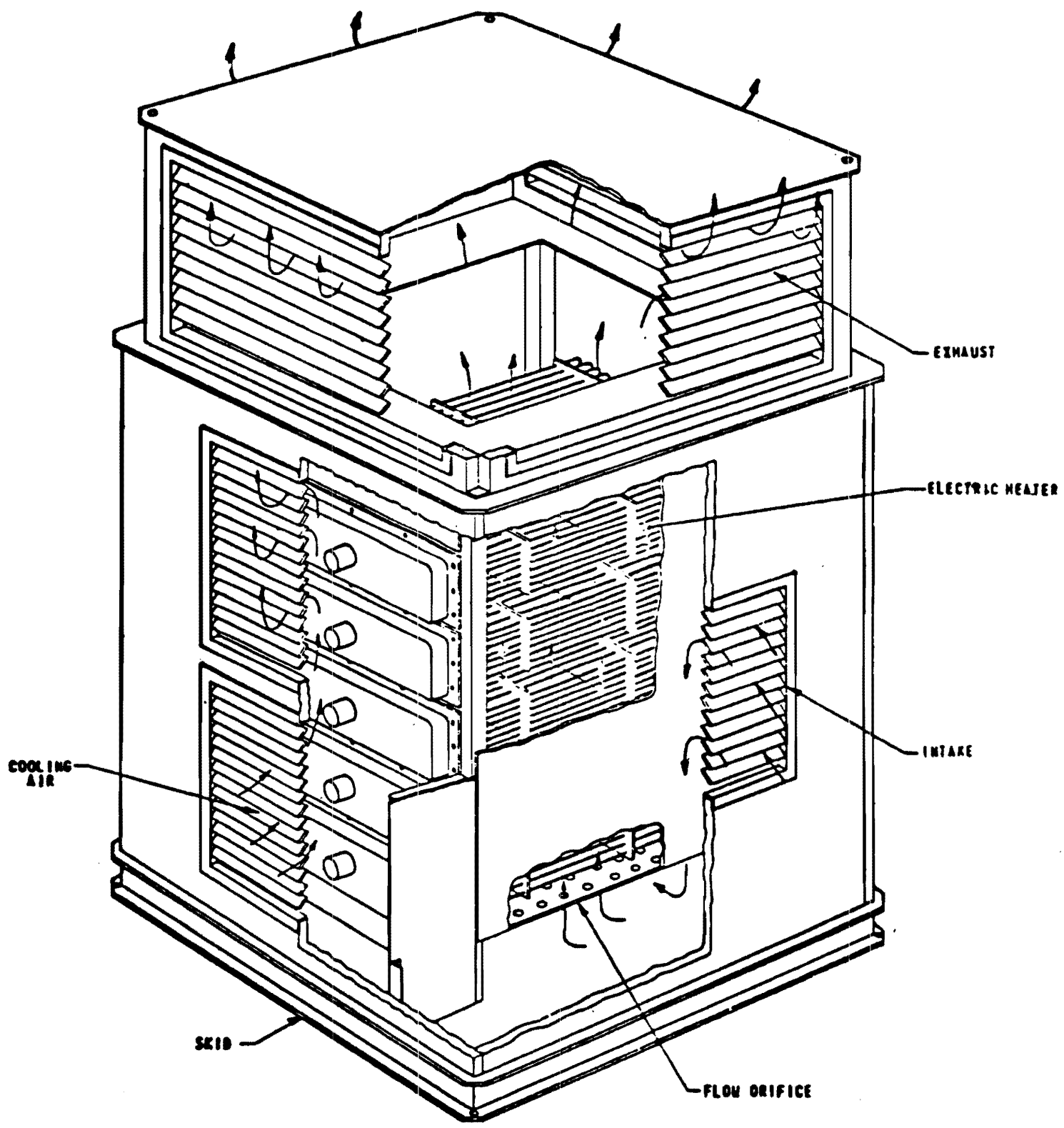

Figure 6.2.5-1 Electric Hydrogen Recombiner

Figure 6.2.5-2 De1eted By Amendment 62

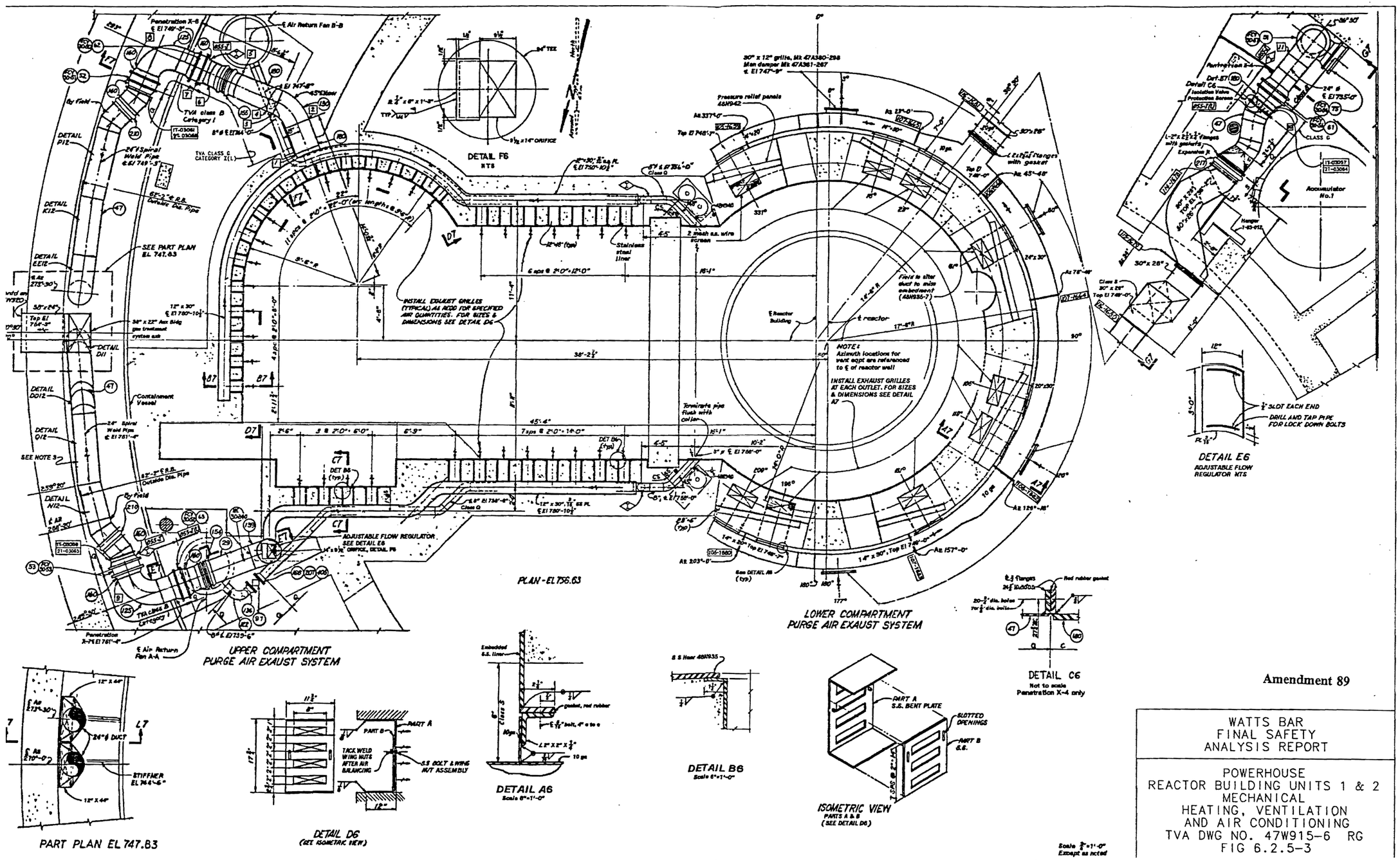

Figure 6.2.5-3 Powerhouse Reactor Building Units 1 & 2 - Mechanical Heating, Ventilating and Air Conditioning

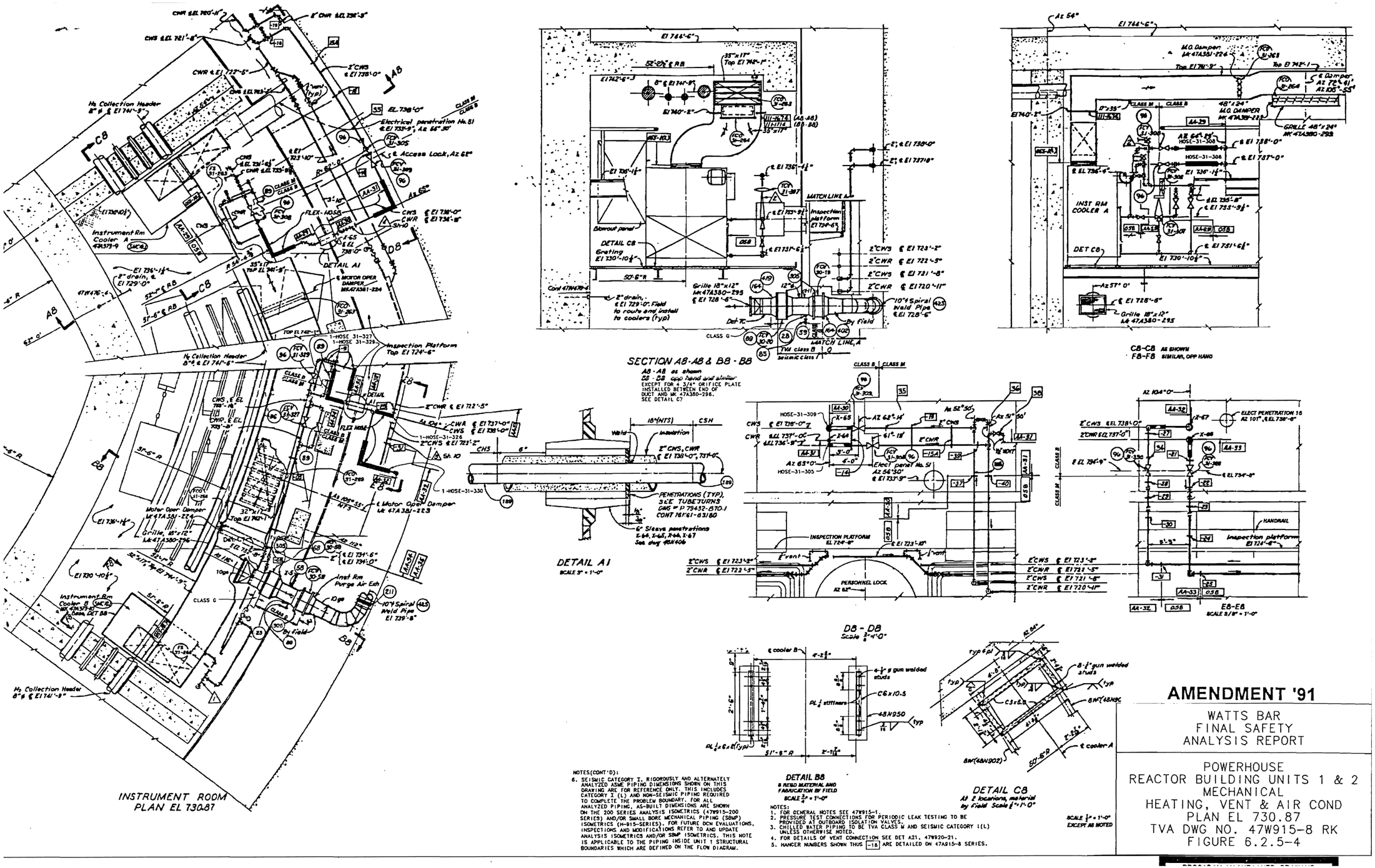

Figure 6.2.5-4 Powerhouse Reactor Building Units 1 & 2 Reactor Building - Mechanical Heating, Ventilating and Air Conditioning

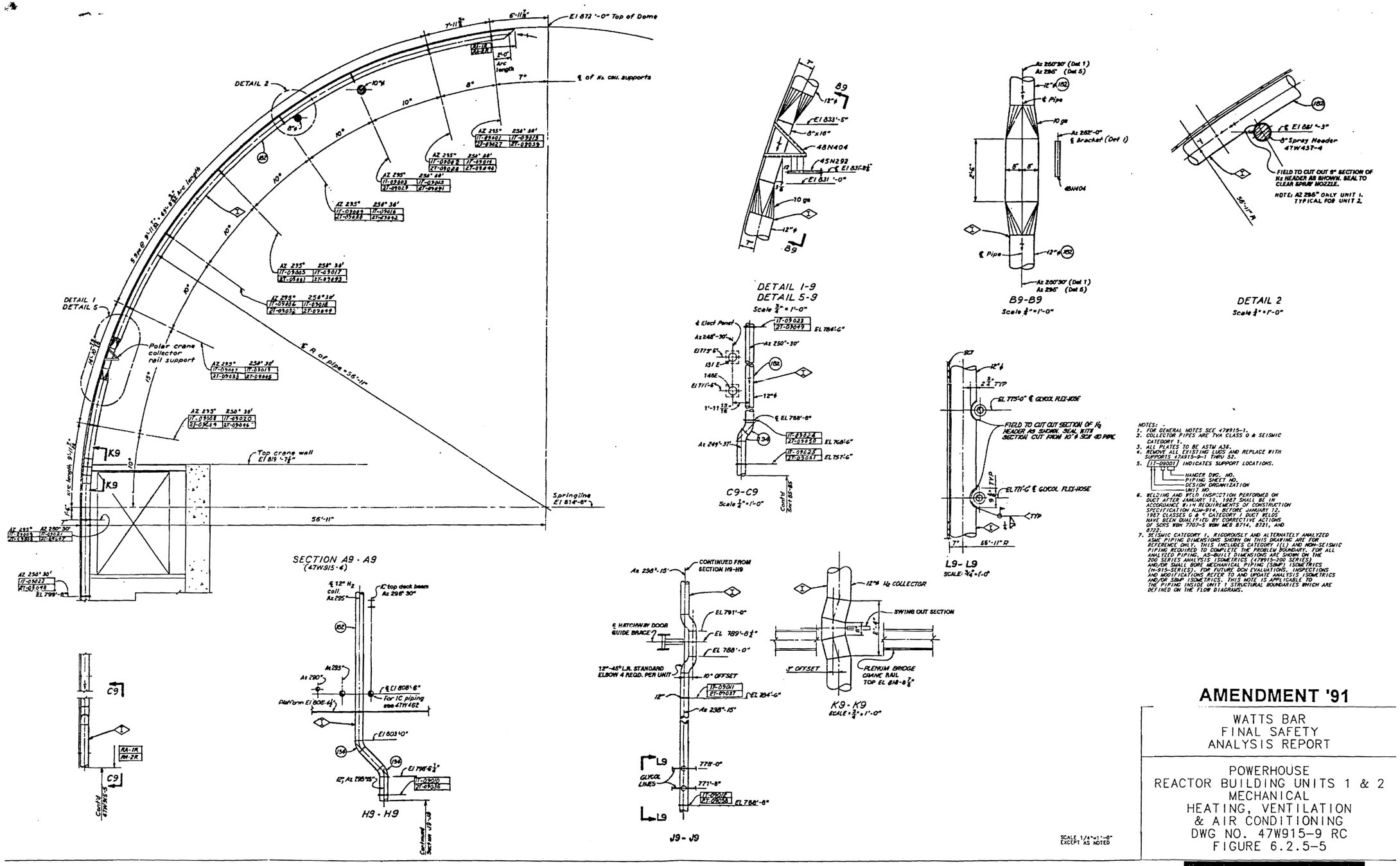

Figure 6.2.5-5 Powerhouse Reactor Building Units 1 & 2 - Mechanical Heating, Ventilating and Air Conditioning

FUNCTION FLOW BLOCK DIAGRAM-CONTAINMENT GAS MONITOR SUBSYSTEM

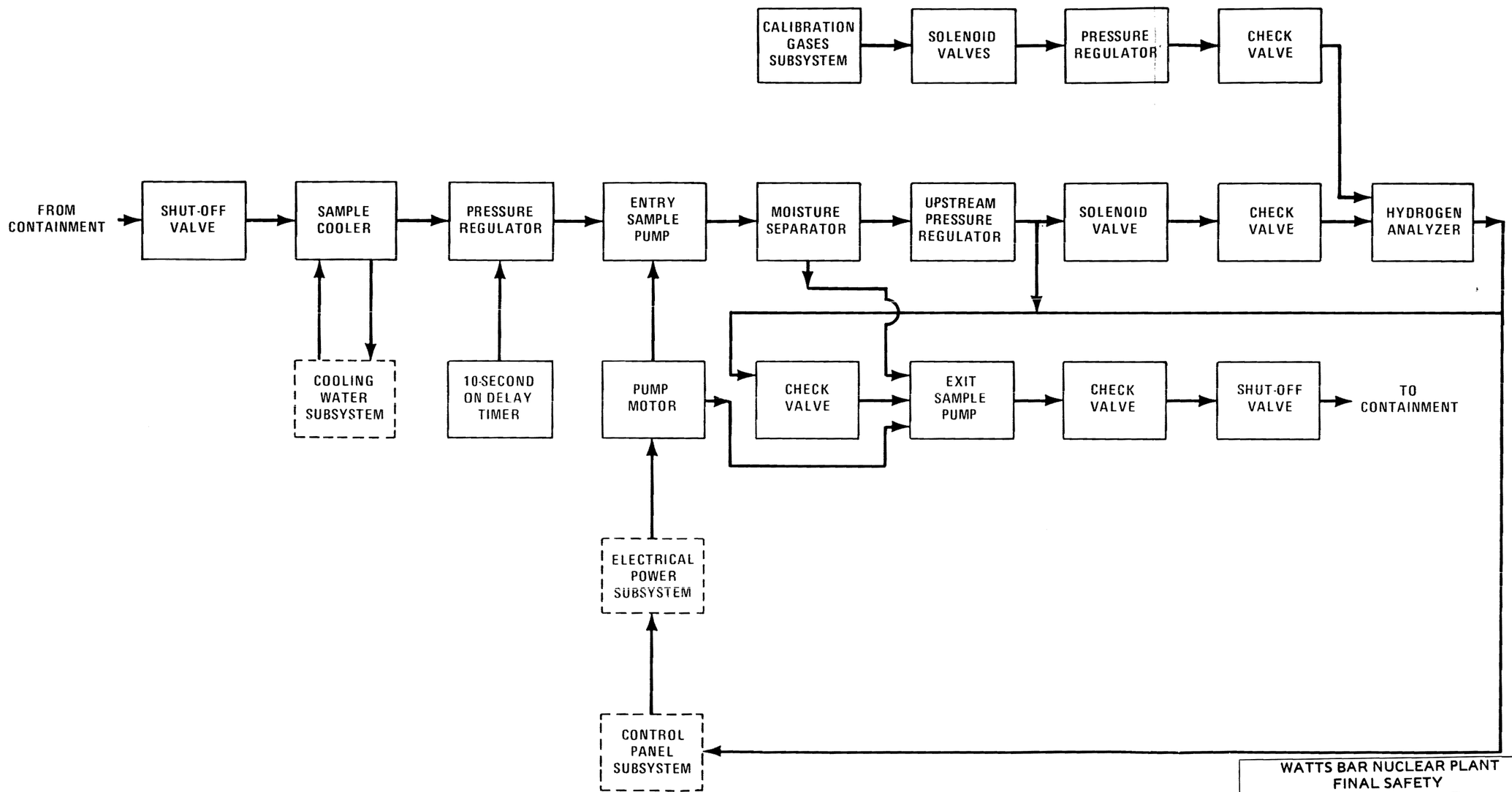

Figure 6.2.5-6 Function Flow Block Diagram - Containment Gas Monitor Subsystem

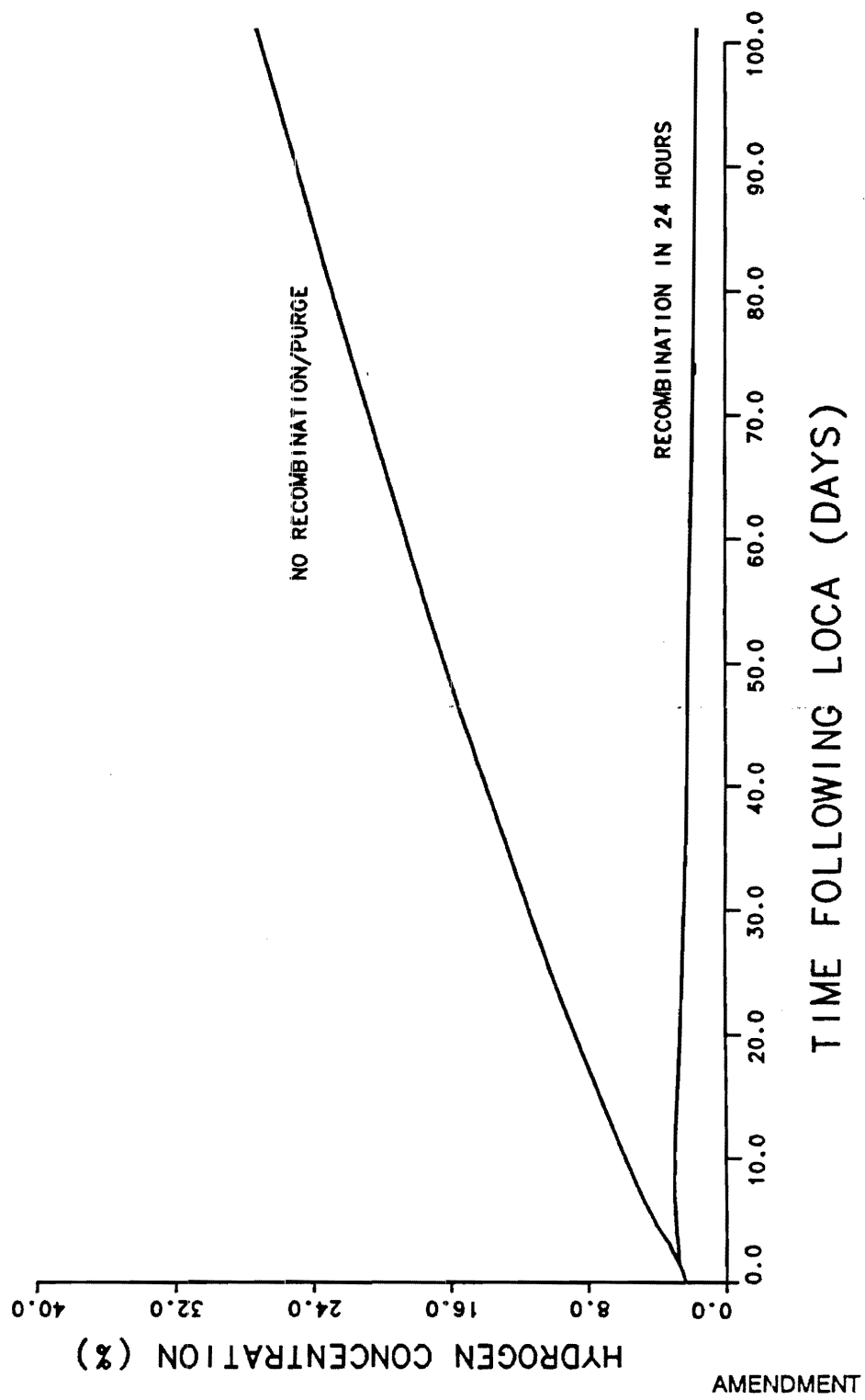

AMENDMENT 85

Figure 6.2.5-7 Hydrogen Volume Percent in Containment - NRC Basis - No Recombiner - Recombiner Start at 24 Hrs.

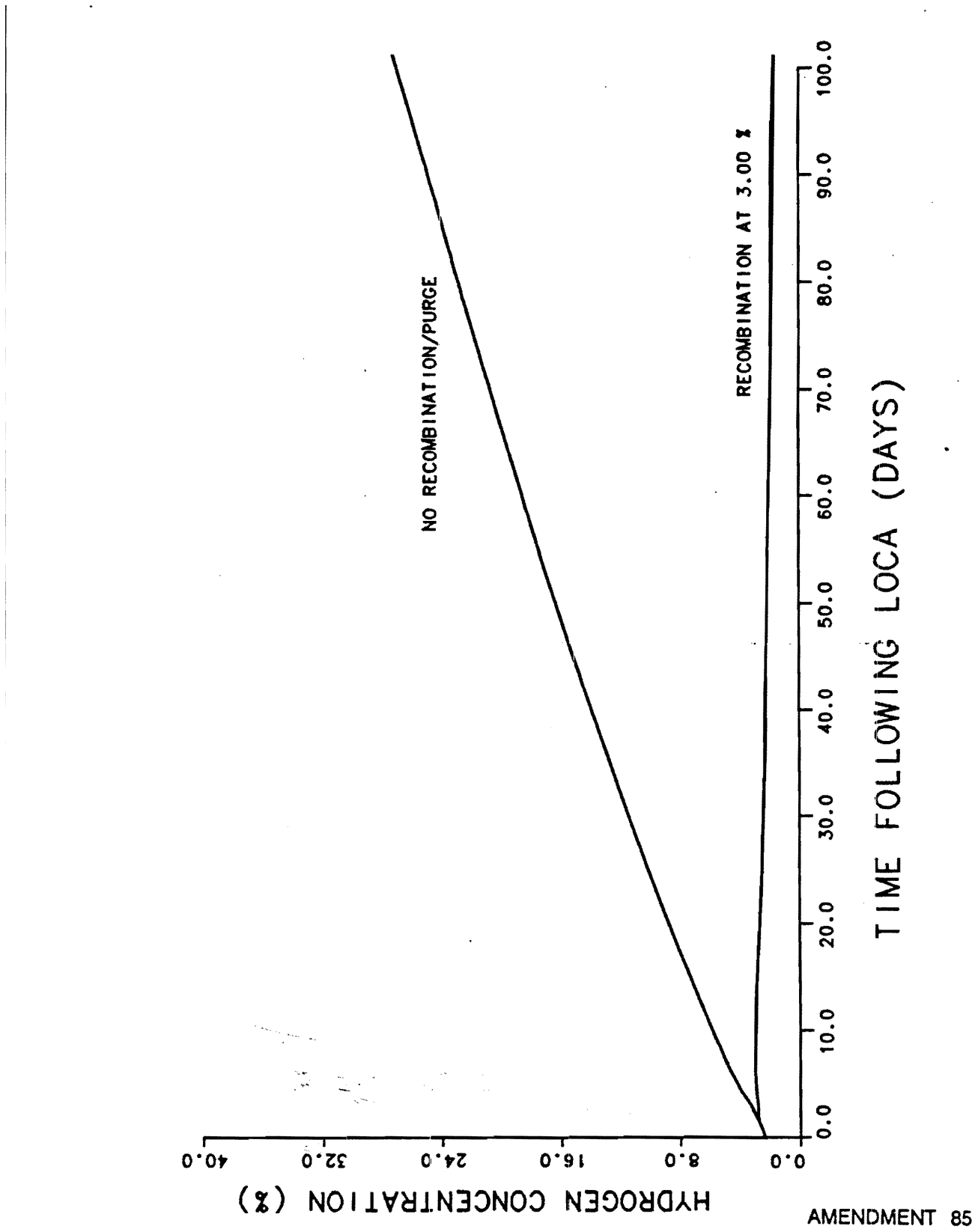

AMENDMENT 85

Figure 6.2.5-7a Hydrogen Volume Percent in Conntainment - NRC Basis - No Recombiner - Recombiner Start at 3 Volume Percent

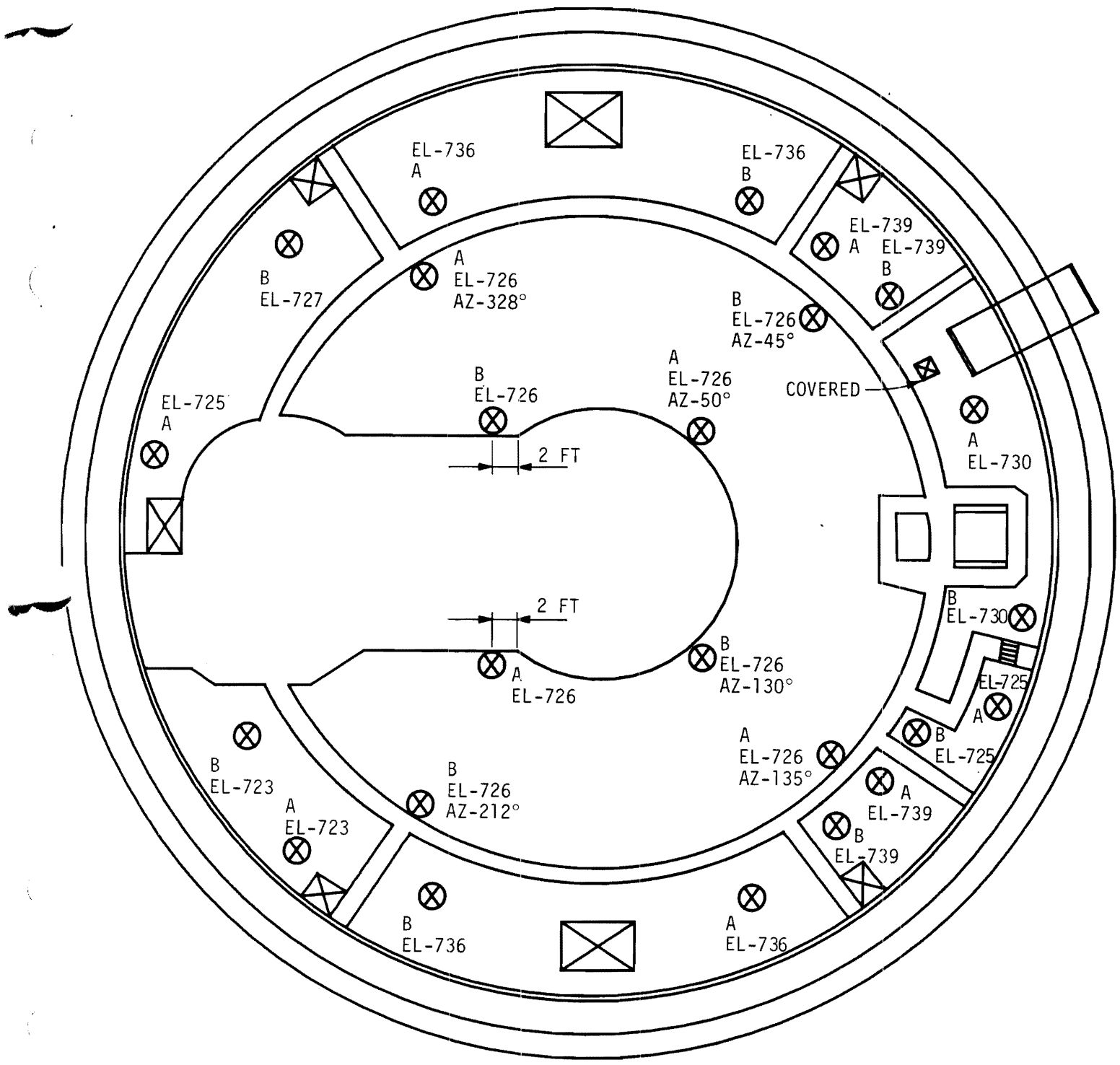

Figure 6.2.5-A-1 Igniter Locations - Lower Compartment and Dead Ended Compartments

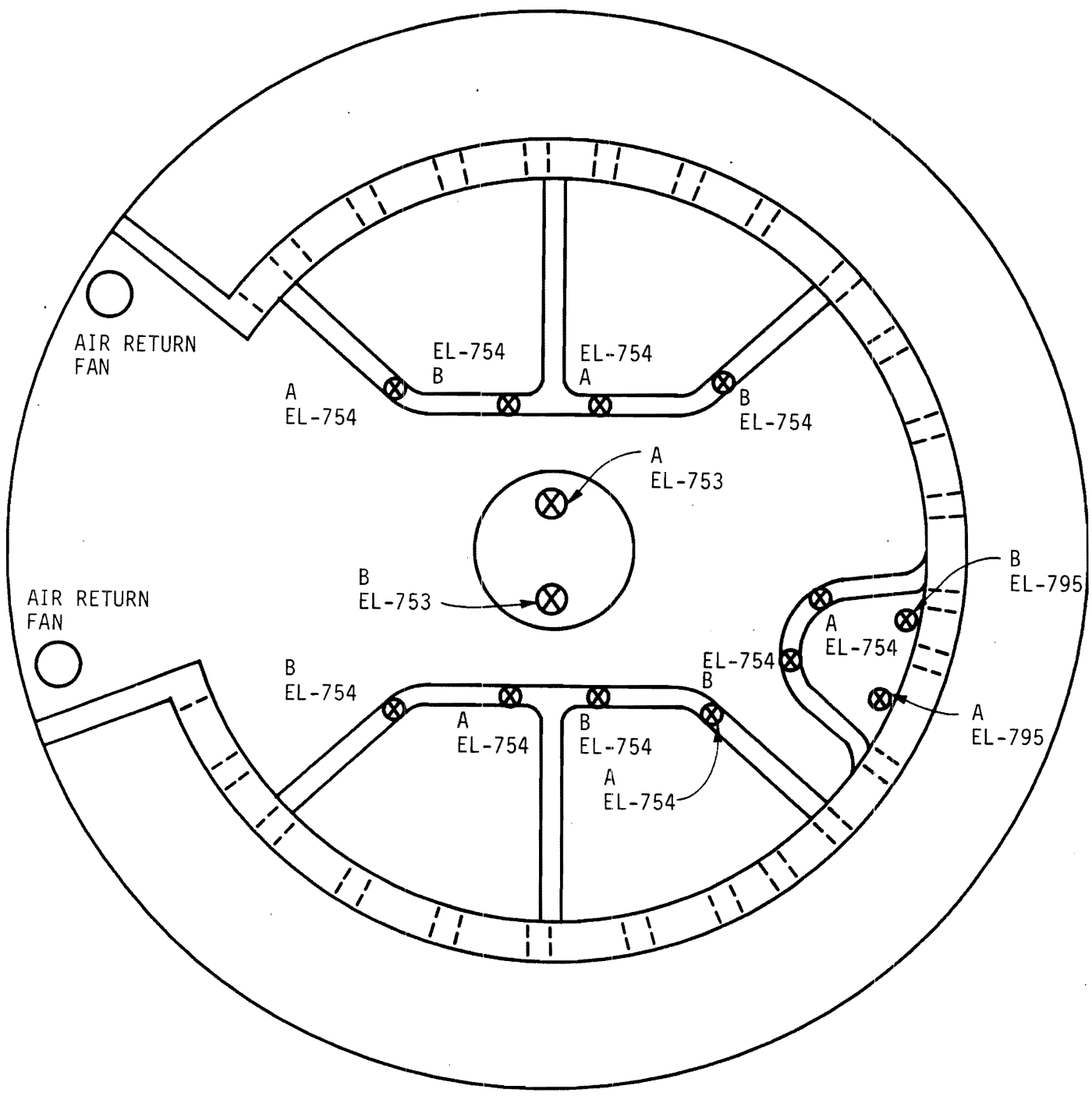

Figure 6.2.5-A-2 Igniter Locations - Lower Compartments

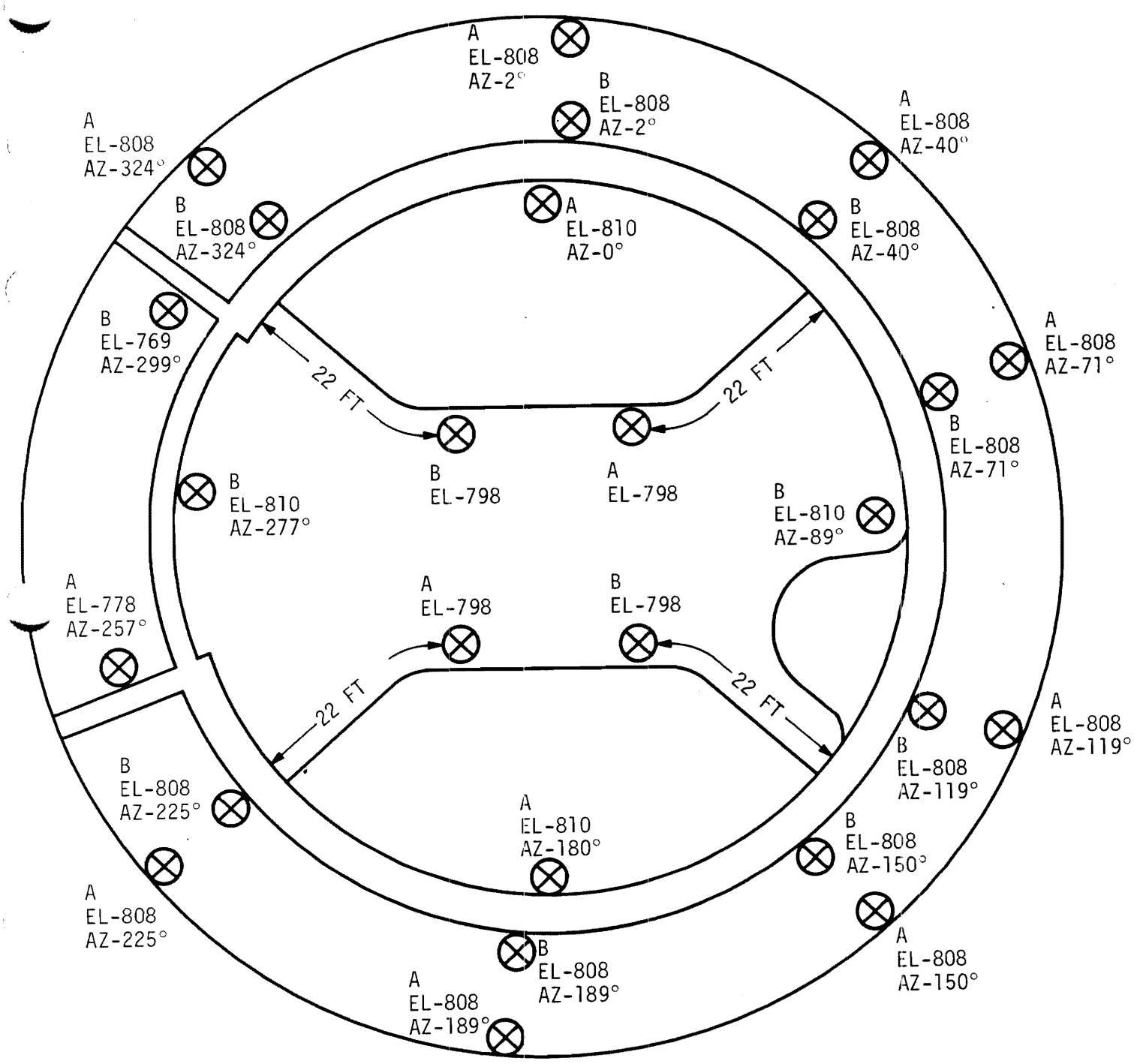

Figure 6.2.5-A-3 Igniter Locations - Upper Plenum and Upper Compartments

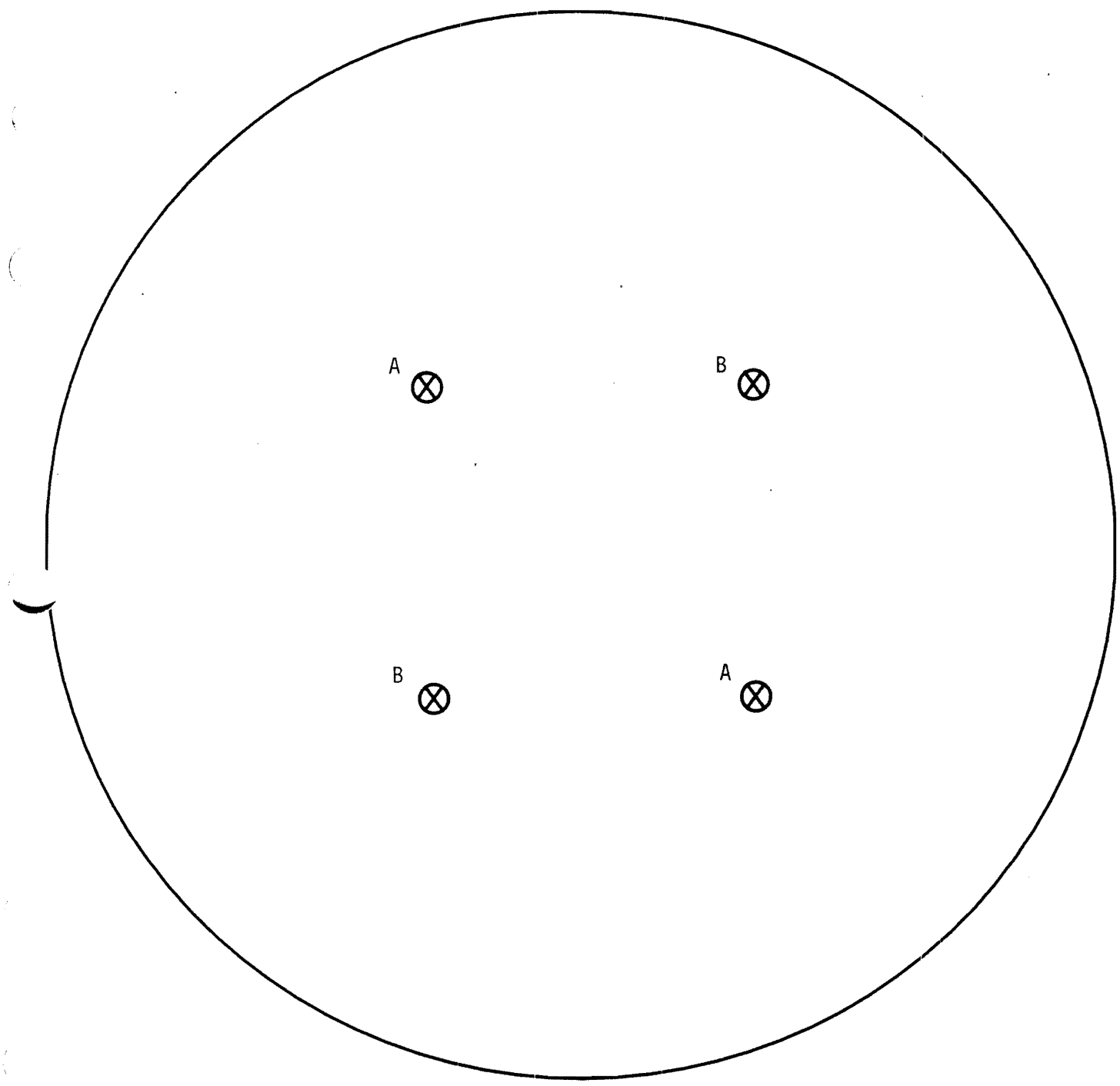

Figure 6.2.5-A-4 Igniter Locations - Dome

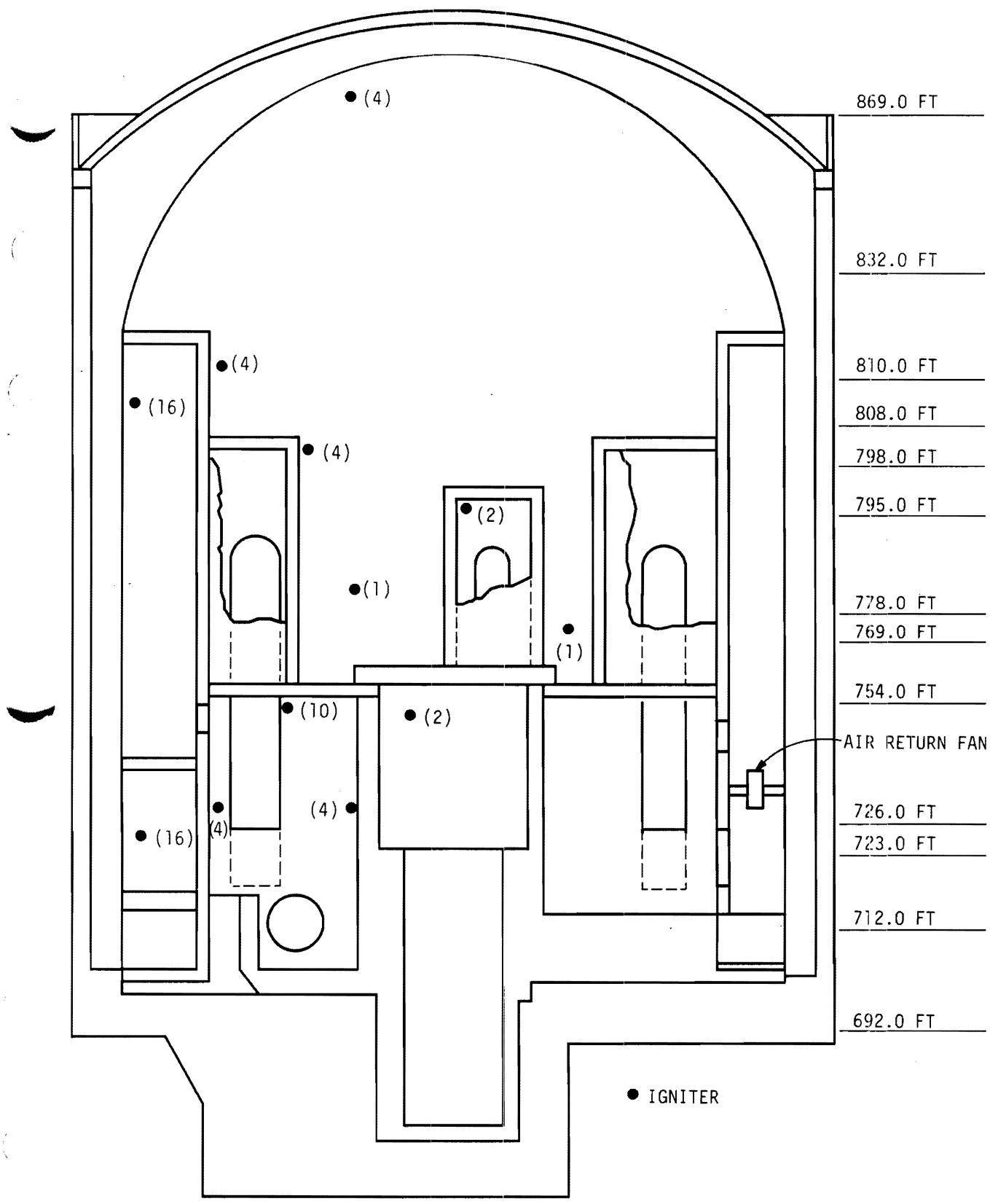

Figure 6.2.5-A-5 Igniter Locations - Elevation

THIS PAGE INTENTIONALLY BLANK

6.2.6 Containment Leakage Testing

Primary containment leakage tests and containment isolation system valve operability tests will be performed periodically to verify that leakage from the containment is maintained within acceptable limits set forth in the Technical Specifications. The types of leakage tests are as follows:

(1) Test Type A

Tests to measure the reactor primary containment overall integrated leakage rate. The containment leak rate test will be conducted in accordance with 10 CFR 50, Appendix J.

(2) Test Type B

Tests to detect and measure local leaks of containment penetrations, hatches, and personnel locks as required by 10 CFR 50, Appendix J.

(3) Test Type C

Test to detect and measure containment isolation valve leakage as described by 10 CFR 50, Appendix J.

The leakage rate testing pressure for the above tests, P_a (as defined in 10CFR50 Appendix J), ha a nominal value of 15.0 psig with allowance for instrument error. Exceptions to this test pressure are noted elsewhere in this section.

6.2.6.1 Containment Integrated Leak Rate Test

The maximum allowable containment leakage rate for the Watts Bar Nuclear Plant is 0.25 weight percent per day as specified in the Technical Specifications. The preoperational testing will be conducted in full compliance with 10CFR50, Appendix J as shown in Table 14.2-1. Subsequent periodic testing will also be performed in accordance with Appendix J. Periodic testing durations of less than 24 hours may be conducted when performed in accordance with Bechtel Topical Report BN-TOP-1, Revision 1, "Testing Criteria for Integrated Leakage Rate Testing of Primary Containment Structures for Nuclear Power Plants."

Prior to conducting the integrated leak rate test, those lines which penetrate primary containment are aligned as shown in Table 6.2.6-3.

The containment is then pressurized in accordance with 10 CFR 50, Appendix J, and the Technical Specification requirements. When test pressure is reached, the containment is isolated from its pressure source and the following parameters are recorded at periodic intervals:

(1) Containment absolute pressure

(2) Dry bulb temperatures

(3) Water vapor pressures

(4) Outside containment pressure and temperature conditions

During the test, ventilation inside the containment is operated as necessary to enhance an even air temperature distribution. The test data are processed at periodic intervals during the test to determine test status and leakage conditions. If it appears that the leakage is excessive, the pressure plateau is either maintained on the test or aborted to perform repairs. The test is run for a prescribed time period to obtain assurance of the leak test rate.

Following the leak rate test, a second leak rate is performed to verify the information obtained in the first test. This verification test consists of slowly bleeding off pressure from containment at a known rate and measuring the total containment leak rate. The superimposed, measured flow is adjusted to a value which causes a change in the weight of air in the containment that is in the same order of magnitude as the allowable leakage rate.

The total time equations or the mass point equations are used to determine the integrated leak rate. The mass point equations will be used for preoperational testing as discussed in Table 14.2-1.

6.2.6.2 Containment Penetration Leakage Rate Test

Table 6.2.4-1 lists penetrations in the primary containment. The Type B test is performed on all operational electrical equipment and personnel hatch, fuel transfer tube, thimble renewal, and ice blowing penetrations, and penetration bellows in accordance with 10 CFR 50, Appendix J. The dual-ply bellows on containment penetration will be tested at P_a by applying the pressure between the plies. Airlock door seals are tested at 6.0 psig per Technical Specification requirements. Experience has shown that pressurizing the space between the seals to greater than 6.5 psig on personnel airlock doors of the design used at Watts Bar will lift the door and induce gross leakage unless strongbacks are used. Since the door seal test is intended to prove integrity of the seals, it is our position that a test conducted at 6.0 psig will conservatively demonstrate that seal integrity is maintained.

Table 6.2.6-1 lists all penetrations subjected to type B testing. Spare electrical penetrations will be subjected to Type B testing as they become operational. Tables 6.2.4-1 through 6.2.4-4 and Figures 8.3-44 and 8.3-45 give details on these penetrations. The test is performed in full compliance with 10 CFR 50, Appendix J. The acceptance criteria as required by Appendix J are specified in the Technical Specifications.

Table 6.2.4-1 lists containment isolation valves. Table 6.2.6-2a identifies those valves that are tested during a Type C test.

Isolation valves that are part of closed systems that are in use after a design basis event and valves that are water sealed for at least 30 days after a design basis event are not tested in the Type C test program. Table 6.2.6-2b lists the valves exempted

from type C leak testing. Bases for exemptions and exceptions from type C leakage rate testing on a penetration by penetration basis are as follows:

(I) Exemptions

(1) Feedwater Bypass - X-8A, X-8B, X-8C, X-8D

Feedwater - X-12A, X-12B, X-12C, X-12D

Main Steam - X-13A, X-13B, X-13C, X-13D

Steam Generator Blowdown - X-14A, X-14B, X-14C, X-14D

Steam Generator Blowdown - X-27A, X-27B, X-27C, X-27D

Auxiliary Feedwater, X-40A, X-40B

These penetrations are directly connected to the secondary side of the steam generator. The main steam and feedwater lines of PWR containments are not required to be Type C tested (see definition of Type C test in 10 CFR 50, Appendix J). These lines are assumed not to rupture as a result of an accident (missile protected). Any leakage through these lines would be identified during operation by the leakage detection program. In addition, during a design basis accident, the secondary side of the steam generator is filled with water and would be at a higher pressure than the containment atmosphere thus preventing outleakage from containment. The integrity of the inside piping is also verified during the Type A test.

(2) CVCS Normal Charging Line, X-16

This penetration uses an inboard check valve and a closed loop outside containment (CLOC) as the means of containment isolation. Type C testing for this path is not required due to the seal pressure greater than 1.1 P_a and the 30-day water seal inventory as specified in 10 CFR 50, Appendix J. A positive pressure preventing air outleakage is assured by the pressure applied against FCV-62-90 and FCV-62-91 (both of which receive a Phase A signal) by the high head SI pumps. Water testing for piping integrity is performed in accordance with ASME XI, IWV.

(3) RHR Hot Leg Injection, X-17

This penetration uses inboard containment isolation valves and a CLOC for containment boundaries. Type C testing for this penetration is not required since a continuous water seal will be provided at a pressure greater than 1.1 P_a and a 30-day water seal is provided, as specified in 10 CFR 50, Appendix J. Testing is performed in accordance with ASME XI, IWV.

(4) RHR Cold Leg Injection, X-20A, X-20B

Same as for X-17.

(5) SIS Hot Leg Injection, X-21, X-32

These lines make use of inboard containment isolation valves and a CLOC for containment boundaries. These lines are postulated to be in-service post accident and the high head pumps will maintain a pressure seal greater than 1.1 P_a for greater than 30 days, as specified in 10 CFR 50, Appendix J.

(6) Charging Pump Discharge, X-22

This line makes use of inboard containment isolation valves and a CLOC for containment boundaries. Type C testing is not required for the same reasons as X-21 and X-32. Water seal is provided by the high head pumps.

(7) SIS Cold Leg Injection, X-33

Same as X-21 and X-32

(8) RCP Seal Injection, X-43A, X-43B, X-43C, X-43D

These lines made use of an inboard containment isolation valve and a CLOC for containment boundaries. Type C test is not required for the same reason as given for X-16.

(II) Exceptions

(1) Sump Suction to RHR, X-19A, X-19B

These lines make use of a containment isolation valve located outside of containment and a CLOC for containment isolation boundaries. During a design basis accident, these lines would be submerged under water which would preclude air outleakage. In addition, these valves are exposed to P_a during each Type A test.

(2) SI Relief Valve Discharge to PRT, X-24

The line uses an inboard containment isolation valve and a CLOC for containment boundaries. The maximum calculated containment accident pressure per 10 CFR 50 Appendix J (P_a) during the design basis accident would not create a substantial outleakage driving force and, in any case, tends to cause the relief valves to seat rather than lift. The systems feeding this line are ECCS and, due either to operating pressure or static head, outleakage would be prevented. Therefore, no Type C testing will be performed for this line. However, this line is exposed to the P_a test pressure during the Type A test.

(3) Containment Spray, X-48A, X-48B and RHR Spray, X-49A, X-49B

These lines make use of an inboard containment isolation check valve and a CLOC for containment boundaries of each line. Additionally, a water leg seal exists against a system valve outside containment in each line. This seal

prevents the outleakage of containment atmosphere. An inventory test is performed to ensure a 30-day seal water inventory at a pressure greater than 1.1 P_a, should one spray system shut down. The seal water inventory leakage rate test is performed in lieu of a Type C air leakage rate test of the containment isolation check valves.

(4) RHR Pump Supply, X-107

This line makes use of inboard containment isolation valves and a CLOC for containment boundaries. This penetration satisfies ANSI-N271-1976. In addition, an ASME Section XI water leakage test is performed to verify system integrity. Thus, no Type C test is required for this line.

Test connections and pressurizing means are provided to test isolation valves or barriers for leaktightness. Either air, nitrogen or water is used as the pressurizing medium, depending on the physical location and service of each line. Leak testing of individual valves and penetrations is accomplished by one of the following methods:

(1) Method 1, Pressure Decay

The test volume is established by closing the appropriate isolation valves. The volume to be tested is established by either direct measurement of liquid drained from the system or by computation. The test volume is pressurized to 1 psig. With the test volume pressure recorded at intervals dependent on magnitude of test volume, the leakage rate is computed using the following equation:

$$L_i = \frac{TV}{t}\left[\frac{P_1}{T_1} - \frac{P_2}{T_2}\right]\frac{T_{stp}}{P_{stp}}$$

Where:

L_i = Local leak rate, cfm

TV = Test volume, ft^3

P_1 = Initial pressure, psia

P_2 = Final pressure, psia

T_1 = Initial temperature, ER

T_2 = Final temperature, ER

T_{stp} = 520ER

P_{stp} = 14.696 psia

t = Test duration, min.

(2) Method 2, Airflow (Mass Flowmeter)

The test volume is established by closing the appropriate isolation valves. This method does not require the determination of the volume to be tested. The test volume is pressurized and maintained at or slightly above 15 psig. Pressure and airflow are recorded after stabilization of temperature, pressure and air flow.

(3) Method 3, Waterflow

The test volume is established by closing the appropriate isolation valves. The test volume is filled with water and vented by using the test vents and test connections provided on the containment penetrations. The test volume is pressurized and the leakage flow is measured from each valve.

The acceptance criteria for the Type C test are given in the Technical Specification which complies with Appendix J to 10 CFR 50.

6.2.6.3 Scheduling and Reporting of Periodic Tests

Type A integrated containment leakage tests are performed prior to operation of the plant and at three approximately equal intervals during each 10 years of operation with the last test occurring at the end of each 10-year period.

Type B and Type C leakage rate tests are performed at each refueling interval, not to exceed 24 months.

Test reports are made in accordance with Appendix J of 10 CFR 50 and as specified in the Technical Specifications.

6.2.6.4 Special Testing Requirements

Inleakage from the Shield Building to the Reactor Building annulus is checked preoperationally, and the exhaust flow rate to maintain the annulus at the specified negative pressure is continuously monitored when containment integrity is required except during abnormal or accident conditions. During accident conditions the Shield Building inleakage is not continuously monitored. Additional discussions on the engineered safety feature portion of the secondary containment air cleanup system are given in Section 6.2.3.

The effectiveness of fluid filled systems is verified by use of the systems during normal operation or periodic testing to show operability and the ability to develop required pressures.

Table 6.2.6-1 Penetrations Subjected To Type B Testing (Page 1 of 3)

Penetration	Description
X-121E	RCP No. 1 - Non-Div.
X-122E	RCP No. 2 - Non-Div.
X-123E	RCP No. 3 - Non-Div.
X-124E	RCP No. 4 - Non-Div.
X-125E	480V Power - Non-Div.
X-126E	480V Power A
X-127E	480V Power B
X-128E	480V Power A
X-129E	480V Power B
X-130E	Control - Non-Div.
X-131E	480V Power - Non-Div.
X-132E	Control Rod Drive Power
X-133E	Control Rod Drive Power
X-134E	480V Power A
X-135E	480V Power A
X-136E	480V Power B
X-137E	480V Power B
X-138E	Low Level - Non-Div.
X-139E	Process Instr. Protection
X-140E	Incore Instrumentation
X-141E	480V Power A
X-142E	Incore Instrumentation
X-143E	NIS Channel III
X-144E	480V Power - Non-Div.
X-145E	Control Rod Pos. Detection
X-146E	Control Rod Drive Power
X-147E	Control A
X-148E	Process Inst. Control
X-149E	Low Level - Non-Div.
X-150E	Annunciation and Communication
X-151E	NIS Channel IV
X-152E	480V Power - Non-Div.
X-153E	Low Level - Non-Div.
X-154E	Process Inst. Control
X-155E	480V Power - Non-Div.
X-156E	Control B
X-157E	Annunciation
X-158E	Process Inst. Protection
X-159E	Process Inst. Control

Table 6.2.6-1 Penetrations Subjected To Type B Testing (Page 2 of 3)

Penetration	Description
X-160E	Annunciation and Communication
X-161E	480V Power - Non-Div.
X-163E	NIS Channel I
X-164E	Control A
X-165E	Process Inst. Protection
X-166E	Control - Non-Div.
X-167E	480V Power - Non-Div.
X-168E	Control - Non-Div.
X-169E	Process Inst. Protection
X-170E	Process Inst. Control
X-171E	Control - Non-Div.
X-172E	Control B
X-173E	Control - Non-Div.
X-174E	NIS Channel II
X-1	Equipment Hatch (Resilient Seal)
X-2A	Personnel Hatch (Resilient Seal)
X-2B	Personnel Hatch (Resilient Seal)
X-3	Fuel Transfer Tube (Resilient Seal)
X-54	Thimble Renewal (Resilient Seal)
X-79A	Ice Blowing (Resilient Seal)
X-13A	Main Steam Line (Bellows)
X-13B	Main Steam Line (Bellows)
X-13C	Main Steam Line (Bellows)
X-13D	Main Steam Line (Bellows)
X-12A	Main Feedwater Line (Bellows)
X-12B	Main Feedwater Line (Bellows)
X-12C	Main Feedwater Line (Bellows)
X-12D	Main Feedwater Line (Bellows)
X-17	RHR Pump Return Line (Bellows)
X-107	RHR Pump Supply Line (Bellows)
X-14A	Steam Generator Blowdown (Bellows)
X-14B	Steam Generator Blowdown (Bellows)
X-14C	Steam Generator Blowdown (Bellows)
X-14D	Steam Generator Blowdown (Bellows)
X-15	Chemical and Volume Control System (Bellows)
X-20A	Low Head Safety Injection System (Bellows)
X-20B	Low Head Safety Injection System (Bellows)
X-21	Safety Injection Hot Legs (Bellows)
X-22	BIT Charging Pump Discharge (Bellows)
X-24	SIS Relief Valve Discharge (Bellows)
X-40D	Hydrogen Purge (Resilient Seal)
X-79B	Ice Blowing (Resilient Seal)
X-8A	Feedwater Bypass (Bellows)
X-8B	Feedwater Bypass (Bellows)
X-8C	Feedwater Bypass (Bellows)
X-8D	Feedwater Bypass (Bellows)
X-30	Accum. To Holdup Tank (Bellows)
X-32	High Head Safety Injection System (Bellows)
X-33	High Head Safety Injection System (Bellows)

Table 6.2.6-1 Penetrations Subjected To Type B Testing (Page 3 of 3)

Penetration	Description
X-45	RC Drain Tank (Bellows)
X-46	RC Drain Tank (Bellows)
X-47A	Glycol (Bellows)
X-47B	Glycol (Bellows)
X-81	RC Drain Tank to Anal. (Bellows)
X-108	Testable Spare (Resilient Seal)
X-108	Maintenance Port (Bellows)
X-109	Testable Spare (Resilient Seal)
X-109	Maintenance Port (Bellows)
X-36	Steam Generator Cleanup (Resilient Seal)
X-37	Maintenance Port (Resilient Seal)
X-117	Maintenance Port (Resilient Seal)
X-118	Layup Water (Resilient Seal)

Table 6.2.6-2a Containment Isolation Valves Subjected to Type C Testing (Page 1 of 6)

Penetration No.	Isolation Valve No.	Description
X-4	30-56(1) 30-57	Lower Compt Purge Air Exhaust
X-5	30-58(1) 30-59	Inst Room Purge Air Exhaust
X-6	30-50(1) 30-51	Upper Compt Purge Air Exhaust
X-7	30-52(1) 30-53	Upper Compt Purge Air Exhaust
X-9A	30-7 30-8(1)	Upper Compt Purge Air Supply
X-9B	30-9 30-10(1)	Upper Compt Purge Air Supply
X-10A	30-14 30-15(1)	Lower Compt Purge Air Supply
X-10B	30-16 30-17(1)	Lower Compt Purge Air Supply
X-11	30-19 30-20(1)	Inst Room Purge Air Supply
X-15	62-72 62-73 62-74 62-76 62-77 62-662(1)	Chem and Vol System Letdown
X-23	43-318 43-319	PAS Cont Air Intk TR-B
X-25A	43-11 43-12	Pressurizer Liquid Sample
X-25D	43-2 43-3	Pressurizer Steam Sample
X-26B	52-500 52-504	ILRT Sensor Line
X-26A	52-501 52-505	ILRT Sensor Line
X-28	43-341 43-834	PAS Cont Sump Rtrn TR-B

Table 6.2.6-2a Containment Isolation Valves Subjected to Type C Testing (Page 2 of 6)

Penetration No.	Isolation Valve No.	Description
X-29	70-89 70-92 70-698	CCS from RC Pump Coolers
X-30	63-71 63-84 63-23	Accum to Holdup Tank
X-31	26-243 26-1296	Fire Protection
X-34	32-110 32-288 32-293	Control Air
X-35	70-85 70-703(1)	CCS from Excess Letdn HX CCS to Excess Letdn HX
X-39A	63-64 77-868	N_2 to Accumulators
X-39B	68-305 77-849	N_2 to Press Relief Tank
X-41	77-127 77-128 77-2875	Floor Sump Pump Disch
X-42	81-12 81-502	Press Rel Tank Makeup
X-44	62-61 62-63 62-639	From RC Pump Seals
X-45	77-18 77-19 77-20	RC Drain Tank and Prt to VH
X-46	77-9 77-10 84-530	RC Drain Tank Pump Disch
X-47A	61-191 61-192 61-533 (Unit 1) 61-788 (Unit 2)	Glycol Supply

Table 6.2.6-2a Containment Isolation Valves Subjected to Type C Testing (Page 3 of 6)

Penetration No.	Isolation Valve No.	Description
X-47B	61-193 61-194 61-680 (Unit 1) 61-935 (Unit 2)	Glycol Return
X-50A	70-87 70-90 70-687	RCP Therm Barrier Return
X-50B	70-679 70-134	RCP Therm Barrier Supply
X-52	70-140 1-70-100 1-70-790	CCS to RC Pump Coolers
X-53	70-143	CCS to Excess Letdown HX
X-56A	67-107 1-67-113 1-67-1054D	Lower Cont ERCW Supply
X-57A	67-111 67-112 67-575D	Lower Cont ERCW Return
X-58A	67-83 67-89 67-1054A	Lower Cont ERCW Supply
X-59A	67-87 67-88 67-575A	Lower Cont ERCW Return
X-60A	67-99 67-105 67-1054B	Lower Cont ERCW Supply
X-61A	67-103 67-104 67-575B	Lower Cont ERCW Return
X-62A	67-91 67-97 67-1054C	Lower Cont ERCW Supply
X-63A	67-95 67-96 67-575C	Lower Cont ERCW Return

Table 6.2.6-2a Containment Isolation Valves Subjected to Type C Testing (Page 4 of 6)

Penetration No.	Isolation Valve No.	Description
X-64	31-305 31-306 31-3421	Inst Room Chilled H_2O Return
X-65	31-309 31-308 31-3407	Inst Room Chilled H_2O Supply
X-66	31-326 31-327 31-3392	Inst Room Chilled H_2O Return
X-67	31-330 31-329 31-3378	Inst Room Chilled H_2O Supply
X-68	67-141 67-580D	Upper Cont ERCW Supply
X-69	67-130 67-580A	Upper Cont ERCW Supply
X-70	67-139 67-297 67-585B	Upper Cont ERCW Return
X-71	67-134 67-296 67-585C	Upper Cont ERCW Return
X-72	67-142 67-298 67-585D	Upper Cont ERCW Return
X-73	67-131 67-295 67-585A	Upper Cont ERCW Return
X-74	67-138 67-580B	Upper Cont ERCW Supply
X-75	67-133 67-580C	Upper Cont ERCW Supply
X-76	33-713 (Unit 1) 33-714 (Unit 1) 33-732 (Unit 2) 33-733 (Unit 2)	Service Air
X-77	59-522 59-698	Demineralized Water

Table 6.2.6-2a Containment Isolation Valves Subjected to Type C Testing (Page 5 of 6)

Penetration No.	Isolation Valve No.	Description
X-78	26-240 26-1260	Fire Protection
X-80	30-37 30-40	Lower Comp Press Relief
X-81	77-16 77-17	RC Drain Tk to Gas Analyzer
X-82	78-560 78-561	Refuel Cav Purification Pump Suction
X-83	78-557 78-558	Refuel Cav Purification Pump Discharge
X-84A	68-307 68-308	Prt to Gas Analyzer
X-85A	43-75 43-77	Ex Lt Dn Hx to Boron Anal
X-85B	43-22 43-23	Hot Leg Sample - Loops 1 & 3
X-86A	43-288 43-287	PAS Cont Air Intk TR-A
X-86B	43-883 43-307	PAS Cont Air Rtrn TR-A
X-86C	43-342 43-841	PAS Cont Sump Rtrn TR-A
X-90	32-102 32-308 32-313	Control Air TR-B
X-91	32-80 32-298 32-303	Control Air TR-A
X-92A	43-207 43-435	Hydrogen Analyzer TR-B
X-92B	43-208 43-436	Hydrogen Analyzer TR-B
X-92C	43-250 43-251	PAS Hot Leg 1 TR-A
X-93	43-34 43-35	Accum Sample

Table 6.2.6-2a Containment Isolation Valves Subjected to Type C Testing (Page 6 of 6)

Penetration No.	Isolation Valve No.	Description
X-94B	90-110 90-111	Upper Comp Air Mon Intake
X-94C	90-107 90-108 90-109	Upper Comp Air Mon Return
X-95B	90-116 90-117	Lower Comp Air Mon Intake
X-95C	90-113 90-114 90-115	Lower Comp Air Mon Return
X-96A	52-506 52-502	ILRT Sensor Line
X-96B	52-507 52-503	ILRT Sensor Line
X-97	30-134 30-135	Containment ΔP Sensor
X-99	43-202 43-434	Hydrogen Analyzer TR-A
X-100	43-201 43-433	Hydrogen Analyzer TR-A
X-105	43-325 43-884	PAS Cont Air Rtrn TR-B
X-106	43-310 43-309	PAS Hot Leg 3 TR-B
X-114	61-110 61-122 61-745	Glycol Floor Cooling (From)
X-115	61-96 61-97 61-692	Glycol Floor Cooling (To)

Notes:

(1) These isolation valves are leakage rate tested in the reverse direction. This is acceptable since the results are equivalent or more conservative.

Table 6.2.6-2b Valves Exempted From Type C Leak Testing (Page 1 of 4)

Penetration No.	Valve No.	System	Justification
X-8A	FCV 3-236	Feedwater Bypass	Note 1
	LCV 3-164	Auxiliary Feedwater	Note 1
	LCV 3-174	Auxiliary Feedwater	Note 1
	FCV 3-164A	Auxiliary Feedwater	Note 1
X-8B	FCV 3-239	Feedwater Bypass	Note 1
X-8C	FCV 3-242	Feedwater Bypass	Note 1
X-8D	FCV 3-245	Feedwater Bypass	Note 1
	LCV 3-171	Auxiliary Feedwater	Note 1
	LCV 3-175	Auxiliary Feedwater	Note 1
	FCV 3-171A	Auxiliary Feedwater	Note 1
X-12A	FCV 3-33	Main Feedwater	Note 1
	ISV 41-586	S. G. Layup	Note 1
X-12B	FCV 3-47	Main Feedwater	Note 1
	ISV 41-589	S. G. Layup	Note 1
X-12C	FCV 3-87	Main Feedwater	Note 1
	ISV 41-592	S. G. Layup	Note 1
X-12D	FCV 3-100	Main Feedwater	Note 1
	ISV 41-595	S. G. Layup	Note 1
X-13A	FCV 1-4	Main Steam	Note 1
	FCV 1-147	Main Steam	Note 1
	FCV 1-15	Main Steam	Note 1
	DRV 1-536	Main Steam	Note 1
	PCV 1-5	Main Steam	Note 1
	SFV 1-522	Main Steam	Note 1
	SFV 1-523	Main Steam	Note 1
	SFV 1-524	Main Steam	Note 1
	SFV 1-525	Main Steam	Note 1
	SFV 1-526	Main Steam	Note 1
X-13B	FCV 1-11	Main Steam	Note 1
	FCV 1-148	Main Steam	Note 1
	PCV 1-12	Main Steam	Note 1
	DRV 1-534	Main Steam	Note 1
	SFV 1-517	Main Steam	Note 1
	SFV 1-518	Main Steam	Note 1
	SFV 1-519	Main Steam	Note 1
	SFV 1-520	Main Steam	Note 1
	SFV 1-521	Main Steam	Note 1

Table 6.2.6-2b Valves Exempted From Type C Leak Testing (Page 2 of 4)

Penetration No.	Valve No.	System	Justification
X-13C	FCV 1-22	Main Steam	Note 1
	FCV 1-23	Main Steam	Note 1
	FCV 1-149	Main Steam	Note 1
	DRV 1-532	Main Steam	Note 1
	SFV 1-512	Main Steam	Note 1
	SFV 1-513	Main Steam	Note 1
	SFV 1-514	Main Steam	Note 1
	SFV 1-515	Main Steam	Note 1
	SFV 1-516	Main Steam	Note 1
X-13D	FCV 1-29	Main Steam	Note 1
	FCV 1-150	Main Steam	Note 1
	PCV 1-30	Main Steam	Note 1
	DRV 1-538	Main Steam	Note 1
	FCV 1-16	Main Steam	Note 1
	SFV 1-527	Main Steam	Note 1
	SFV 1-528	Main Steam	Note 1
	SFV 1-529	Main Steam	Note 1
	FCV 1-530	Main Steam	Note 1
	SFV 1-531	Main Steam	Note 1
X-14A	FCV 1-14	Steam Generator Blowdown	Note 1
X-14B	FCV 1-32	Steam Generator Blowdown	Note 1
X-14C	FCV 1-25	Steam Generator Blowdown	Note 1
X-14D	FCV 1-7	Steam Generator Blowdown	Note 1
X-16	62-543*	Normal Charging	Note 3
X-17	63-640*	RHR (Low HD SIS)	Note 2
	63-643*	RHR (Low HD SIS)	Note 2
	FCV 63-158	RHR (Low HD SIS)	Note 2
X-19A	FCV 63-072	SIS (Sump Suction)	Note 5
	FCV 72-044	CS (Sump Suction)	Note 5
X-19B	FCV 63-073	SIS (Sump Suction)	Note 5
	FCV 72-045	CS (Sump Suction)	Note 5
X-20A	FCV 63-112	RHR (Low HD SIS)	Note 2
	63-633*	RHR (Low HD SIS)	Note 2
	63-635*	RHR (Low HD SIS)	Note 2
X-20B	FCV 63-111	RHR (Low HD SIS)	Note 2
	63-632*	RHR (Low HD SIS)	Note 2
	63-634*	RHR (Low HD SIS)	Note 2
X-21	FCV 63-167	SIS (Safety Injection)	Note 6
	63-547*		Note 6
	63-549*		Note 6

Table 6.2.6-2b Valves Exempted From Type C Leak Testing (Page 3 of 4)

Penetration No.	Valve No.	System	Justification
X-22	FCV 63-174	SIS (Charging)	Note 7
	63-581*	SIS (Charging)	Note 7
X-24	68-559*	Reactor Coolant	Note 8
X-25B	30-42C1	Containment ΔP Sensor	Note 11
	30-42C2		
X-25C	30-30CC1	Containment ΔP Sensor	Note 11
	30-30CC2		
X-26C	30-43C1	Containment ΔP Sensor	Note 11
	30-43C2		
	30-310C1		
	30-310C2		
X-27A	FCV 43-55	SG Blowdown Sample Line	Note 1
X-27B	FCV 43-58	SG Blowdown Sample Line	Note 1
X-27C	FCV 43-61	SG Blowdown Sample Line	Note 1
X-27D	FCV 43-64	SG Blowdown Sample Line	Note 1
X-32	FCV 63-21	SIS (Safety Injection)	Note 6
	63-543*	SIS (Safety Injection)	Note 6
	63-545*	SIS (Safety Injection)	Note 6

Table 6.2.6-2b Valves Exempted From Type C Leak Testing (Page 4 of 4)

Penetration No.	Valve No.	System	Justification
X-33	FCV 63-121	SIS (Safety Injection)	Note 6
	63-551		Note 6
	63-553		Note 6
	63-555		Note 6
	63-557		Note 6
X-40A	LCV 3-156	Auxiliary Feedwater	Note 1
	LCV 3-173	Auxiliary Feedwater	Note 1
	LCV 3-156A	Auxiliary Feedwater	Note 1
X-40B	LCV 3-148	Auxiliary Feedwater	Note 1
	LCV 3-172	Auxiliary Feedwater	Note 1
	LXC 3-148A	Auxiliary Feedwater	Note 1
X-43A	62-562*	CVCS (Pump Seal Injection)	Note 9
X-43B	62-561*	CVCS (Pump Seal Injection)	Note 9
X-43C	62-563*	CVCS (Pump Seal Injection)	Note 9
X-43D	62-560*	CVCS (Pump Seal Injection)	Note 9
X-48A	72-548*	Containment Spray	Note 10
X-48B	72-549*	Containment Spray	Note 10
X-49A	72-562*	RHR (RHR Spray)	Note 10
X-49B	72-563*	RHR (RHR Spray)	Note 10
X-85C	30-45C1	Containment ΔP Sensor	Note 11
	30-45C2		
X-96C	30-44C1	Containment ΔP Sensor	Note 11
	30-44C2		
	30-311C1		
	30-311C2		
X-107	FCV 74-2	RHR	Note 4
	FCV 74-8	RHR	Note 4
	RFV 74-505	RHR	Note 4
	FCV 63-185	SIS	Note 4

*Check Valve

Note 1.This penetration is directly connected to the secondary side of the steam generator. The main steam, feedwater, and steam generator blowdown lines of PWR containments are not required to be tested (see definition of Type C test in 10 CFR 50, Appendix J). These lines are assumed not to rupture as a result of an accident (missile Protected). Any leakage through these lines would be identified during operation by the leakage detection program. In addition, during a design basis accident, the secondary side would be at a higher pressure than the

containment atmosphere, thus preventing outleakage from containment. The integrity of the inside piping is also verified during the Type A test.

Note 2.This penetration uses inboard containment isolation valves and a CLOC for containment boundaries. Type C testing for this penetration is not required since a continuous water seal will be provided at a pressure greater than 1.1 P_a and a guaranteed 30-day water inventory. Testing will be performed in accordance with ASME XI, IWV.

Note 3.This penetration uses an inboard check valve and a closed loop outside containment (CLOC) as the means of containment isolation. Type C testing for this path is not required due to the presence of a 1.1 P_a pressure and a 30-day inventory criteria as specified in 10 CFR 50, Appendix J. A positive pressure preventing air outleakage is assured by the pressure applied against FCV-62-90 and FCV-62-91 (both of which receive a phase A signal) by the high-head SI pumps. Water testing for piping integrity is performed in accordance with ASME XI, IWV.

Note 4.This line makes use of inboard containment isolation valves an a CLOC for containment boundaries. This penetration satisfies ANSI-N271-1976. In addition, an ASME Section XI water leakage test will be performed to verify system integrity.

Note 5.This line makes use of a containment isolation valve located outside of containment and a CLOC for containment isolation boundaries. During a design basis accident, this line would be submerged under water which would preclude air outleakage. In addition, these valves are exposed to P_a during each Type A test.

Note 6.This line makes use of inboard containment isolation valves and a CLOC for containment boundaries. These lines are postulated to be inservice post-accident and when not in use, the pumps maintain a pressure seal greater than 1.1 P_a.

Note 7.This line makes use of inboard containment isolation valves and a CLOC for containment boundaries. Type C testing is not required for the same reasons as X-21 and X-32 as stated in Note 6. Water seal is provided by the high-head pumps.

Note 8.This line uses an inboard containment isolation valve and a CLOC for containment boundaries. P_a during the design basis accident would not create a substantial outleakage driving force and, in any case, tend to cause the relief valves in the CLOC to seat rather than lift. The systems feeding this line are ECCS and, due either to operating pressure or static head outleakage would be prevented. This line is exposed to the P_a test pressure during the Type A test.

Note 9.This line makes use of an inboard containment isolation valve and a CLOC for containment boundaries. Type C testing is not required for the same reason as given for X-16 in Note 3.

Note 10.This line makes use of an inboard containment isolation valve and a CLOC for containment boundaries. An inventory test is performed to ensure a 30-day inventory at a pressure greater than 1.1 P_a exists, should one spray system shut down. This will prevent outleakage of containment atmosphere.

Note 11.This instrument line has a CLOC for containment boundary. This design is required as discussed in Section 6.2.4. This instrument is tested at P_a during the Type A test.

Table 6.2.6-3 Containment Vessel Pressure And Leak Test Reactor Building Containment Penetration Status (Page 1 of 7)

Penetration	Description	Status
A. PENETRATION STATUS DURING TEST PERFORMANCE		
X-1	Equipment Hatch	Closed
X-2A	Elevation 719'- 4" Air Lock	Closed
X-2B	Elevation 760'- 4" Air Lock	Closed
X-3	Fuel Transfer Tube	Closed
X-4	Heating and Ventilating Air Flow	Vented
X-5	Heating and Ventilating Air Flow	Vented
X-6	Heating and Ventilating Air Flow	Vented
X-7	Heating and Ventilating Air Flow	Vented
X-8	Seal Welded Spare	Vented (see Note 1)
X-8A	Feedwater Bypass	Normal Lineup
X-8B	Feedwater Bypass	Normal Lineup
X-8C	Feedwater Bypass	Normal Lineup
X-8D	Feedwater Bypass	Normal Lineup
X-9A	Heating and Ventilating Air Flow	Vented
X-9B	Heating and Ventilating Air Flow	Vented
X-10A	Heating and Ventilating Air Flow	Vented
X-10B	Heating and Ventilating Air Flow	Vented
X-11	Heating and Ventilating Air Flow	Vented
X-12A	Feedwater System	Normal Lineup
X-12B	Feedwater System	Normal Lineup
X-12C	Feedwater System	Normal Lineup
X-12D	Feedwater System	Normal Lineup
X-13A	Main and Reheat Steam System	Normal Lineup
X-13B	Main and Reheat Steam System	Normal Lineup
X-13C	Main and Reheat Steam System	Normal Lineup
X-13D	Main and Reheat Steam System	Normal Lineup
X-14A	Steam Generator Blowdown System	Normal Lineup
X-14B	Steam Generator Blowdown System	Normal Lineup
X-14C	Steam Generator Blowdown System	Normal Lineup
X-14D	Steam Generator Blowdown System	Normal Lineup
X-15	Chemical and Volume Control System	Drained & Vented
X-16	Chemical and Volume Control System	Normal Lineup
X-17	Residual Heat Removal System	Normal Lineup
X-18	Seal Welded Spare	Vented (see Note 1)
X-19A	Safety Injection System	Normal Lineup
X-19B	Safety Injection System	Normal Lineup
X-20A	Safety Injection System	Normal Lineup

Table 6.2.6-3 Containment Vessel Pressure And Leak Test Reactor Building Containment Penetration Status (Page 2 of 7)

Penetration	Description	Status
X-20B	Safety Injection System	Normal Lineup
X-21	Safety Injection System	Normal Lineup
X-22	Safety Injection System	Normal Lineup
X-23	PAS Cont. Air Intk LC Tr-B	Vented
X-24	Reactor Coolant System	Normal Lineup
X-25A	Radiation System	Drained & Vented
X-25B	Containment ΔP Sensor (PdT30-42)	Vented
X-25C	Containment ΔP Sensor (PdT30-30c)	Vented
X-25D	Radiation Sampling System	Drained & Vented
X-26A	ILRT Sensor Line	In Use (see Note 2)
X-26B	ILRT Sensor Line	In Use (see Note 2)
X-26C	Containment ΔP Sensor (PdT30-43)	Vented
X-27A	Radiation Sampling System	Normal Lineup
X-27B	Radiation Sampling System	Normal Lineup
X-27C	Radiation Sampling System	Normal Lineup
X-27D	Radiation Sampling System	Normal Lineup
X-28	PAS Cont. Sump Return Tr-B	Drained & Vented
X-29	Component Cooling System	Drained & Vented
X-30	Safety Injection System	Drained & Vented
X-31	Fire Protection	Drained & Vented
X-32	Safety Injection System	Normal Lineup
X-33	Safety Injection System	Normal Lineup
X-34	Control Air System	Vented
X-35	Component Cooling Water System	Drained & Vented
X-36	SG Chem. Cleaning	Vented (see Note 1)
X-37	Maintenance Port	Vented (see Note 1)
X-38	Seal Welded Spare	Vented (see Note 1)
X-39A	Waste Disposal System	Vented
X-39B	Waste Disposal System	Vented
X-39C	Seal Welded Spare	Vented (see Note 1)
X-39D	Seal Welded Spare	Vented (see Note 1)
X-40A	Auxiliary Feedwater System	Normal Lineup
X-40B	Auxiliary Feedwater System	Normal Lineup
X-40C	Seal Welded Spare	Vented (see Note 1)
X-40D	Hydrogen Purge	Vented
X-41	Waste Disposal System	Drained & Vented
X-42	Primary Water System	Drained & Vented
X-43A	Chemical and Volume Control System	Normal Lineup
X-43B	Chemical and Volume Control System	Normal Lineup
X-43C	Chemical and Volume Control System	Normal Lineup
X-43D	Chemical and Volume Control System	Normal Lineup
X-44	Chemical and Volume Control System	Drained & Vented
X-45	Waste Disposal System	Vented
X-46	Waste Disposal System	Drained and Vented

Table 6.2.6-3 Containment Vessel Pressure And Leak Test Reactor Building Containment Penetration Status (Page 3 of 7)

Penetration	Description	Status
X-47A	Ice Condenser System	In Use
X-47B	Ice Condenser System	In Use
X-48A	Containment Spray System	Normal Lineup
X-48B	Containment Spray System	Normal Lineup
X-49A	Containment Spray System	Normal Lineup
X-49B	Containment Spray System	Normal Lineup
X-50A	Component Cooling System	Drained & Vented
X-50B	Component Cooling System	Drained & Vented
X-51	Seal Welded Spare	Vented (see Note 1)
X-52	Component Cooling System	Drained & Vented
X-53	Component Cooling System	Drained & Vented
X-54	Thimble Renewal	In Use
X-55	Seal Welded Spare	Vented (see Note 1)
X-56A	Essential Raw Cooling Water	Drained & Vented
X-56B	Seal Welded Spare	Vented (see Note 1)
X-57A	Essential Raw Cooling Water	Drained & Vented
X-57B	Seal Welded Spare	Vented (see Note 1)
X-58A	Essential Raw Cooling Water	Drained & Vented
X-58B	RCS Pressure Sensor	Normal Lineup
X-59A	Essential Raw Cooling Water	Drained & Vented
X-59B	Seal Welded Spare	Vented (see Note 1)
X-60A	Essential Raw Cooling Water	Drained & Vented
X-60B	Seal Welded Spare	Vented (see Note 1)
X-61A	Essential Raw Cooling Water	Drained & Vented
X-61B	Seal Welded Spare	Vented (see Note 1)
X-62A	Essential Raw Cooling Water	Drained & Vented
X-62B	Seal Welded Spare	Vented (see Note 1)
X-63A	Essential Raw Cooling Water	Drained & Vented
X-63B	Seal Welded Spare	Vented (see Note 1)
X-64	Air Conditioning System	Drained & Vented
X-65	Air Conditioning System	Drained & Vented
X-66	Air Conditioning System	Drained & Vented
X-67	Air Conditioning System	Drained & Vented
X-68	Essential Raw Cooling Water	Drained & Vented
X-69	Essential Raw Cooling Water	Drained & Vented
X-70	Essential Raw Cooling Water	Drained & Vented
X-71	Essential Raw Cooling Water	Drained & Vented
X-72	Essential Raw Cooling Water	Drained & Vented
X-73	Essential Raw Cooling Water	Drained & Vented
X-74	Essential Raw Cooling Water	Drained & Vented
X-75	Essential Raw Cooling Water	Drained & Vented
X-76	Control and Service Air System	Vented
X-77	Demineralized Water and Cask Decon	Drained & Vented

Table 6.2.6-3 Containment Vessel Pressure And Leak Test Reactor Building Containment Penetration Status (Page 4 of 7)

Penetration	Description	Status
X-78	Fire Protection	Drained & Vented
X-79A	Ice Blowing	Vented
X-79B	Negative Return	Vented
X-80	Heating and Ventilating Air Flow	Vented
X-81	Waste Disposal System	Drained & Vented
X-82	Fuel Pool Cooling and Cleaning System	Drained & Vented
X-83	Fuel Pool Cooling and Cleaning System	Drained & Vented
X-84A	Radiation Sampling System	Drained & Vented
X-84B	RVLIS	Normal Lineup
X-84C	RVLIS	Normal Lineup
X-84D	RVLIS	Normal Lineup
X-85A	Radiation Sampling System	Drained & Vented
X-85B	Radiation Sampling System	Drained & Vented
X-85C	Containment ΔP Sensor (PdT30-45)	Vented
X-85D	Seal Welded Spare	Vented (see Note 1)
X-86A	PAS Cont. Air Intk UC Tr-A	Vented
X-86B	PAS Cont. Air Rtrn Tr-A	Vented
X-86C	PAS Cont. Sump Rtrn Tr-A	Drained & Vented
X-86D	Seal Welded Spare	Vented (see Note 1)
X-87A	Seal Welded Spare	Vented (see Note 1)
X-87B	RVLIS	Normal Lineup
X-87C	RVLIS	Normal Lineup
X-87D	RVLIS	Normal Lineup
X-88	Seal Welded Spare	Vented (see Note 1)
X-89	Seal Welded Spare	Vented (see Note 1)
X-90	Control Air System Tr-B	Vented
X-91	Control Air System Tr-A	Vented
X-92A	Hydrogen Analyzer Tr-B	Vented
X-92B	Hydrogen Analyzer Tr-B	Vented
X-92C	PAS Hot Leg 1 Tr-A	Drained & Vented
X-92D	Seal Welded Spare	Vented (see Note 1)
X-93	Radiation Sampling System	Drained & Vented
X-94A	Seal Welded Spare	Vented (see Note 1)
X-94B	Radiation Monitoring System	Vented
X-94C	Radiation Monitoring System	Vented
X-95A	Seal Welded Spare	Vented (see Note 1)
X-95B	Radiation Monitoring System	Vented
X-95C	Radiation Monitoring System	Vented
X-96A	ILRT Sensor Line	In Use (see Note 2)
X-96B	ILRT Sensor Line	In Use (see Note 2)
X-96C	Containment ΔP Sensor (Pdt 30-44)	Vented
X-97	Containment ΔP Sensor (PdT30-133)	Vented
X-98	Seal Welded Spare	Vented (see Note 1)

Table 6.2.6-3 Containment Vessel Pressure And Leak Test Reactor Building Containment Penetration Status (Page 5 of 7)

Penetration	Description	Status
X-99	Hydrogen Analyzer Tr-A	Vented
X-100	Hydrogen Analyzer Tr-A	Vented
X-101	Seal Welded Spare	Vented (see Note 1)
X-102	Seal Welded Spare	Vented (see Note 1)
X-103	Seal Welded Spare	Vented (see Note 1)
X-104	Seal Welded Spare	Vented (see Note 1)
X-105	PAS Cont. Air Rtrn Tr-B	Vented
X-106	PAS Hot Leg 3 Tr-B	Drained & Vented
X-107	Residual Heat Removal System	Normal Lineup
X-108	Maintenance Port	Vented (see Note 1)
X-109	Maintenance Port	Vented (see Note 1)
X-110	Seal Welded Spare	Vented (see Note 1)
X-111	Seal Welded Spare	Vented (see Note 1)
X-112	Seal Welded Spare	Vented (see Note 1)
X-113	Seal Welded Spare	Vented (see Note 1)
X-114	Ice Condenser System	In Use
X-115	Ice Condenser System	In Use
X-116	Seal Welded Spare	Vented (see Note 1)
X-117	Maintenance Port	Vented (see Note 1)
X-118	Layup Water Treatment	In Use
X-119	Seal Welded Spare	Vented (see Note 1)
X-120	Seal Welded Spare	Vented (see Note 1)
X-121E	Electrical Penetration	Vented (see Note 1)
X-122E	Electrical Penetration	Vented (see Note 1)
X-123E	Electrical Penetration	Vented (see Note 1)
X-124E	Electrical Penetration	Vented (see Note 1)
X-125E	Electrical Penetration	Vented (see Note 1)
X-126E	Electrical Penetration	Vented (see Note 1)
X-127E	Electrical Penetration	Vented (see Note 1)
X-128E	Electrical Penetration	Vented (see Note 1)
X-129E	Electrical Penetration	Vented (see Note 1)
X-130E	Electrical Penetration	Vented (see Note 1)
X-131E	Electrical Penetration	Vented (see Note 1)
X-132E	Electrical Penetration	Vented (see Note 1)
X-133E	Electrical Penetration	Vented (see Note 1)
X-134E	Electrical Penetration	Vented (see Note 1)
X-135E	Electrical Penetration	Vented (see Note 1)
X-136E	Electrical Penetration	Vented (see Note 1)
X-137E	Electrical Penetration	Vented (see Note 1)
X-138E	Electrical Penetration	Vented (see Note 1)
X-139E	Electrical Penetration	Vented (see Note 1)
X-140E	Electrical Penetration	Vented (see Note 1)
X-141E	Electrical Penetration	Vented (see Note 1)
X-142E	Electrical Penetration	Vented (see Note 1)

Table 6.2.6-3 Containment Vessel Pressure And Leak Test Reactor Building Containment Penetration Status (Page 6 of 7)

Penetration	Description	Status
X-143E	Electrical Penetration	Vented (see Note 1)
X-144E	Electrical Penetration	Vented (see Note 1)
X-145E	Electrical Penetration	Vented (see Note 1)
X-146E	Electrical Penetration	Vented (see Note 1)
X-147E	Electrical Penetration	Vented (see Note 1)
X-148E	Electrical Penetration	Vented (see Note 1)
X-149E	Electrical Penetration	Vented (see Note 1)
X-150E	Electrical Penetration	Vented (see Note 1)
X-151E	Electrical Penetration	Vented (see Note 1)
X-152E	Electrical Penetration	Vented (see Note 1)
X-153E	Electrical Penetration	Vented (see Note 1)
X-154E	Electrical Penetration	Vented (see Note 1)
X-155E	Electrical Penetration	Vented (see Note 1)
X-156E	Electrical Penetration	Vented (see Note 1)
X-157E	Electrical Penetration	Vented (see Note 1)
X-158E	Electrical Penetration	Vented (see Note 1)
X-159E	Electrical Penetration	Vented (see Note 1)
X-160E	Electrical Penetration	Vented (see Note 1)
X-161E	Electrical Penetration	Vented (see Note 1)
X-162E	Seal Welded Spare	Vented (see Note 1)
X-163E	Electrical Penetration	Vented (see Note 1)
X-164E	Electrical Penetration	Vented (see Note 1)
X-165E	Electrical Penetration	Vented (see Note 1)
X-166E	Electrical Penetration	Vented (see Note 1)
X-167E	Electrical Penetration	Vented (see Note 1)
X-168E	Electrical Penetration	Vented (see Note 1)
X-169E	Electrical Penetration	Vented (see Note 1)
X-170E	Electrical Penetration	Vented (see Note 1)
X-171F	Electrical Penetration	Vented (see Note 1)
X-172E	Electrical Penetration	Vented (see Note 1)
X-173E	Electrical Penetration	Vented (see Note 1)
X-174E	Electrical Penetration	Vented (see Note 1)

Table 6.2.6-3 Containment Vessel Pressure And Leak Test Reactor Building Containment Penetration Status (Page 7 of 7)

Penetration	Description	Status
B.TESTABLE PENETRATIONS REQUIRED TO BE INSERVICE DURING TEST PERFORMANCE		
X-26A X-26B	Integrated Leak Rate Test	Isolation valves required to be open to monitor containment pressure (see Note 2)
X-47A	Ice Condenser System	Glycol cooling supply to air handling units in ice condenser required to ensure ice condition is maintained
		Same as X-47A
		Used as pressuriza-tion point for air compressors
X-47B	Ice Condenser System	Isolation valves required to be open to monitor containment pressure (see Note 2)
X-54	Thimble Renewal	
X-96A X-96B	Integrated Leak Rate Test	
X-107	Residual Heat Removal System	Residual heat removal system required inservice to remove decay heat from fuel
X-114	Ice Condenser System	Glycol return from air handling units required to ensure ice condition is maintained
		Same as X-114
X-115	Ice Condenser System	Used as source for verification flow and post-test depressurization; opened during DBF event to drain water from annulus to Reactor Building floor and equipment drain sump
X-118	Hatch	

Notes:

1. These penetrations are closed. Venting is provided by the design of the penetration such that any leakage is detectable by the integrated leak rate test.

2. These penetrations are designed to facilitate ILRT performance. It may not be necessary to utilize all of the penetrations. If not in use, the penetration is vented.