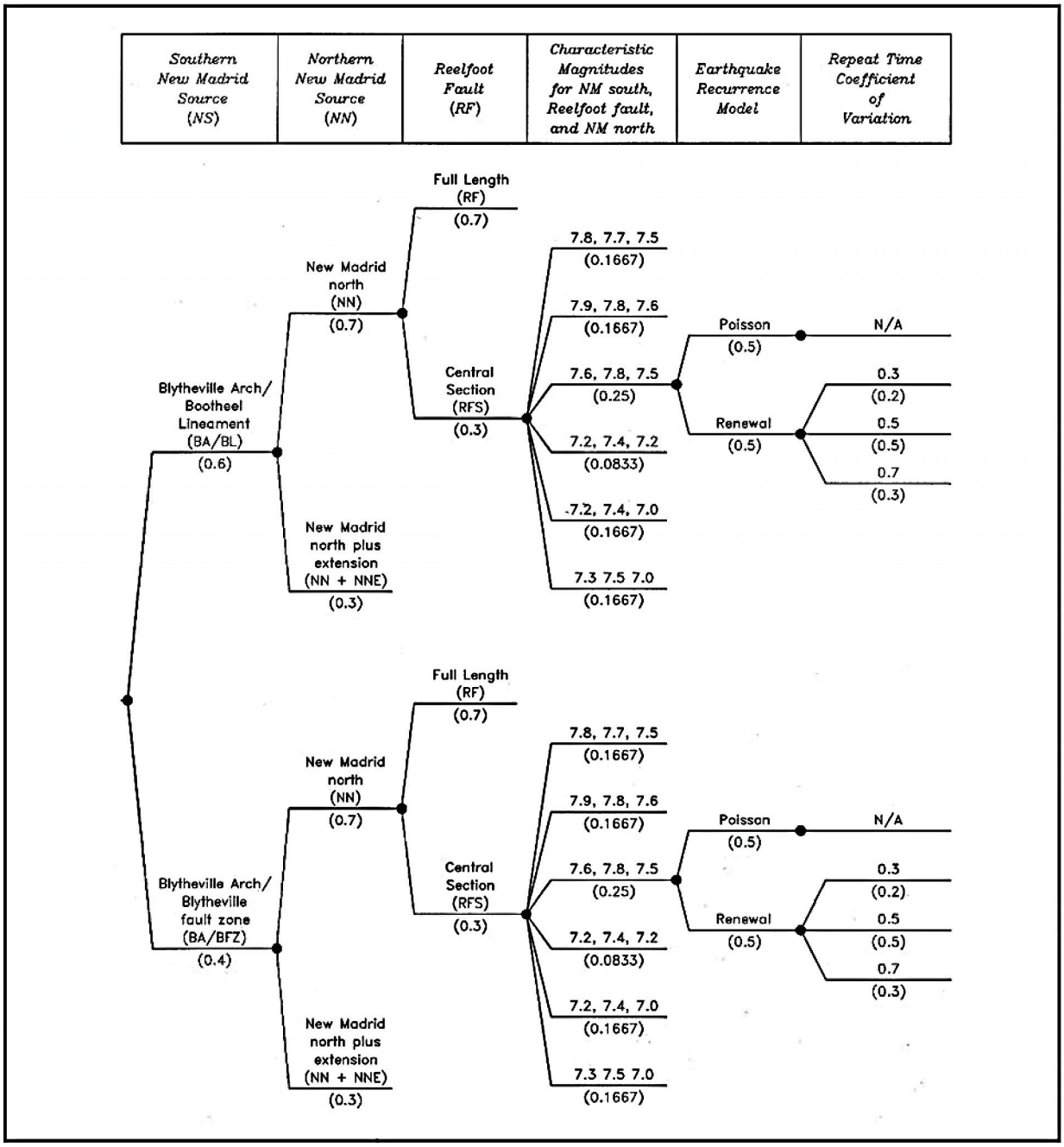


**FIGURE 2.5-263**
**Source Characterization Logic Tree for Repeating Large Magnitude New Madrid Earthquakes**