Final Submittal
(Blue Paper)

FINAL JPMS

1. ADMINISTRATIVE JPMs
2. IN-PLANT JPMs
3. SIMULATOR JPMs (CONTROL ROOM)

PROGRESS ENERGY CAROLINAS
BRUNSWICK TRAINING SECTION

JOB PERFORMANCE MEASURE
ADMINISTRATIVE

A-1A-R

LESSON TITLE: Determine SRM/IRM Overlap Per GP-02.

LESSON NUMBER: LOT-OJT-JP-307-A03

REVISION NO: 0

SAFETY CONSIDERATIONS:

None.

EVALUATOR NOTES: (Do not read to trainee)

1. The applicable procedure section **WILL NOT** be provided to the trainee.
2. If this is the first JPM of the JPM set, read the JPM briefing contained NUREG 1021, Appendix E, or similar to the trainee.
3. Task standards (i.e. pass/fail criteria) for each JPM step are *ITALICIZED* below that step.

Read the following to trainee.

TASK CONDITIONS:

1. Unit One (1) startup is being performed per 0GP-02.
2. Initial (pre-startup) SRM and IRM readings were recorded as follows:

SRM Channel	Reading	IRM Channel	Reading*
A	100 CPS	A	3%
B	150 CPS	B	2%
C	150 CPS	C	4%
D	100 CPS	D	5%
		E	8%
		F	6%
		G	3%
		H	5%

3. Current SRM and IRM readings are as follows:

SRM Channel	Reading	IRM Channel	Reading*
A	2 X 10^5 CPS	A	11%
B	9 X 10^4 CPS	B	14%
C	4 X 10^5 CPS	C	16%
D	3 X 10^5 CPS	D	10%
		E	15%
		F	18%
		G	14%
		H	17%

*** All IRM Readings taken on Range One From the Bar Graph Recorder (0-125%)**

INITIATING CUE:

You are directed to determine if proper SRM/IRM overlap exists in accordance with GP-02.

It is NOT desired to use the highest reading IRM (pre-startup) for overlap criteria for all IRMs.

PERFORMANCE CHECKLIST

NOTE: Sequence is assumed unless denoted in the **Comments**.

Step 1 - Obtain a current revision of 0GP-02.

Current Revision of 0GP-02 obtained and verified, if applicable.

SAT/UNSAT*

Step 2 – Determine SRM/IRM overlap criteria is not met for IRM A and D based on not reading 10% of scale.

Determined that SRM/IRM overlap criteria is not met for IRM A and D based on not reading 10% of scale.

**** CRITICAL STEP**** **SAT/UNSAT***

Step 3 – Determine SRM/IRM overlap criteria is not met for IRM E based on not reading double the initial reading.

Determined that SRM/IRM overlap criteria is not met for IRM E based on not reading double the initial reading.

**** CRITICAL STEP ** SAT/UNSAT***

Step 4 – Determine GP-02 requires the Reactor Engineer be notified and Technical Specification LCO 3.3.1.1 be referenced.

Determined that GP-02 requires the Reactor Engineer be notified and Technical Specification 3.3.1.1 be referenced.

SAT/UNSAT*

TERMINATING CUE: When SRM/IRM overlap determination has been made, this JPM is complete.

*** Comments required for any step evaluated as UNSAT.**

Determine SRM/IRM Overlap Per GP-02.

Time Required for Completion: 10 Minutes (approximate).

APPLICABLE METHOD OF TESTING

Performance: Simulate X Actual ___ Unit: ____

Setting: Control Room ___ Simulator____ (Not applicable to In-Plant JPMs)

Time Critical: Yes ___ No X Time Limit N/A

Alternate Path: Yes ___ No X

EVALUATION

Trainee:_____ SSN: _____

JPM: Pass _____ Fail _____

Remedial Training Required: Yes _____ No _____

Did Trainee Verify Procedure as Authorized Copy?: Yes _____ No _____
(Each Student should verify one JPM per evaluation set.)

Comments: _____

_____

_____

_____

_____

Comments reviewed with Student

Evaluator Signature: _____ Date:_____

TASK CONDITIONS:

1. Unit One startup is being performed per 0GP-02.
2. Initial (pre-startup) SRM and IRM readings were recorded as follows:

SRM Channel	Reading	IRM Channel	Reading*
A	100 CPS	A	3%
B	150 CPS	B	2%
C	150 CPS	C	4%
D	100 CPS	D	5%
		E	8%
		F	6%
		G	3%
		H	5%

3. Current SRM and IRM readings are as follows:

SRM Channel	Reading	IRM Channel	Reading*
A	2×10^5 CPS	A	11%
B	9×10^4 CPS	B	14%
C	4×10^5 CPS	C	16%
D	3×10^5 CPS	D	10%
		E	15%
		F	18%
		G	14%
		H	17%

*** All IRM Readings taken on Range One From the Bar Graph Recorder (0-125%)**

INITIATING CUE:

You are directed to determine if proper SRM/IRM overlap exists in accordance with GP-02.

It is NOT desired to use the highest reading IRM (pre-startup) for overlap criteria for all IRMs.

PROGRESS ENERGY CAROLINAS
BRUNSWICK TRAINING SECTION

JOB PERFORMANCE MEASURE

ADMINISTRATIVE

A-1A-S

LESSON TITLE: Evaluate Core Spray System Operability Test Data

LESSON NUMBER: LOT-ADM-JP-018-A01

REVISION NO: 0

SAFETY CONSIDERATIONS:

None

EVALUATOR NOTES: (Do not read to trainee)

1. The applicable procedure section **WILL** be provided to the trainee.
2. This is an administrative JPM designed to be administered in any setting and may be administered to multiple candidates simultaneously in a classroom setting.
3. If this is the first JPM of the JPM set, read the JPM briefing contained NUREG 1021, Appendix E, or similar to the trainee.
4. Obtain copy of 0PT-07.2.4a and fill out Attachment 1 up to Unit SCO review. Under General Comments, Exceptions, and Corrective Actions fill in None.
5. Fill out Attachment 2 for Core Spray Pump 1A Test Information. Data should be within acceptance range with exception of:

   Incorrectly determine pump DP and record that value. Use numbers that when correctly subtracted place pump DP below the acceptance and required action range value.

   Fill out one vibration (1W A) as greater than maximum acceptance value but less than required action – in alert range.
6. Fill out Attachment 3 for Unit 1 Core Spray Loop A Valve Test Information Sheet. All data filled out should fall within acceptance range with the exception of:

   1-E21-F005A stoke open time should be filled out as greater than maximum value, but less than limiting value.

   1-E21-F031A stroke close time should be filled out as less than minimum value.
7. Provide filled out Attachments 1, 2, & 3 and Acceptance Criteria from 0PT-07.2.4a to examinee. Provide examinee an entire copy of 0PT-07.2.4a if requested (examiner should have available copy for each examinee).
8. Task standards (i.e. pass/fail criteria) for each JPM step are *ITALICIZED* below the step.

Read the following to trainee.

TASK CONDITIONS:

1. 0PT-07.2.4a, Core Spray System Operability Test – Loop A, has just been completed on Unit One for Core Spray Loop 1A by an operator.
2. The test was performed to satisfy the QUARTERLY frequency requirement.
3. Stem verifications and Leakage walkdown were not performed.
4. The operator who completed the test has determined all acceptance criteria are met with no exceptions as certified on Attachment 1.
5. The operator who completed the test has requested a peer check of the data that was recorded on Attachments 2 and 3 to ensure all acceptance criteria are met.
6. Another operator is checking the remainder of the procedure, other than Attachments 2 and 3 for satisfactory completion.

INITIATING CUE:

You are directed to evaluate the data recorded in 0PT-07.2.4a, Attachments 2 and 3, against the acceptance criteria of the test. Report any exceptions to satisfactory performance, and if required, any corrective action required by 0PT-07.2.4a.

PERFORMANCE CHECKLIST

NOTE: Sequence is assumed unless denoted in the **Comments**.

Step 1 - Obtain a current revision of 0PT-02.4.7a.
Current Revision of 0PT-02.7.4a obtained.

SAT/UNSAT*

NOTE: If requested, provide copy of entire procedure 0PT-07.2.4a.

Step 2 – Evaluate data in the completed Attachments 2 and 3 and identify the following DEFICIENCIES and CORRECTIVE ACTIONS.

a. Identify that Pump DP is incorrectly calculated and that actual DP is outside acceptance range and in required action range.
   - *Identified that Pump DP psid is outside acceptance range and in required action range*
   - *Declared Core Spray pump 1A INOPERABLE per the guidance of Acceptance Criteria step 6.1.5*

** **CRITICAL STEP** ** **SAT/UNSAT***

b. Identify that Pump vibration position 1W A is in the alert range.
   - *Identified that Pump vibration position 1W A is in the alert range*
   - *Determine testing frequency shall be doubled per the guidance of Acceptance Criteria step 6.1.4*

** **CRITICAL STEP** ** **SAT/UNSAT***

c. Identify that Valve 1-E21-F005A is outside acceptance range but within limiting time for opening.
   - *Identified that Valve 1-E21-F005A is outside acceptance range but within limiting time for opening.*
   - *Immediately retest or Declare 1-E21-F005A INOPERABLE per the guidance of Acceptance Criteria step 6.2.1.2*

**** CRITICAL STEP ** SAT/UNSAT***

d. Identify that Valve 1-E21-F031A is outside (less than) minimum acceptance range for closing.
   - *Identify that Valve 1-E21-F031A is outside (less than) minimum acceptance range for closing.*
   - *Declare 1-E21-F031A INOPERABLE per the guidance of Acceptance Criteria step 6.2.1.3*

**** CRITICAL STEP ** SAT/UNSAT***

TERMINATING CUE: When the examinee has reviewed Attachments 2 & 3 of PT 07.4.2a and recommended corrective actions, this JPM is complete.

*** Comments required for any step evaluated as UNSAT.**

RELATED TASKS:

209003B201, Perform Core Spray System Operability Test Per PT-07.2.4a (07.2.4b)

K/A REFERENCE AND IMPORTANCE RATING:

GEN 2.1.32 3.8/4.0

Ability to explain and apply system limits and precautions.

REFERENCES:

0PT-07.2.4a

TOOLS AND EQUIPMENT:

None.

ADMINISTRATIVE CATEGORY (from NUREG 1123):

Admin – Equipment Control

Evaluate Core Spray System Operability Test Data.

Validation Time: 15 Minutes

APPLICABLE METHOD OF TESTING

Performance: Simulate ___ Actual X Unit: 1

Setting: Control Room ___ Simulator____ (N/A for Admin or In-Plant JPMs)

Time Critical: Yes ___ No X Time Limit N/A

Alternate Path: Yes ___ No X

EVALUATION

Trainee:_____

JPM: Pass _____ Fail _____

Remedial Training Required: Yes _____ No _____

Did Trainee Verify Procedure as Authorized Copy?: Yes _____ No _____

Comments: _____

_____

_____

_____

_____

Comments reviewed with Student

Evaluator Signature: _____ Date:_____

TASK CONDITIONS:

1. 0PT-07.2.4a, Core Spray System Operability Test – Loop A, has just been completed on Unit One for Core Spray Loop 1A by an operator.

2. The test was performed to satisfy the QUARTERLY frequency requirement.

3. Stem verifications and Leakage walkdown were not performed.

4. The operator who completed the test has determined all acceptance criteria are met with no exceptions as certified on Attachment 1.

5. The operator who completed the test has requested a peer check of the data that was recorded on Attachments 2 and 3 to ensure all acceptance criteria are met.

6. Another operator is checking the remainder of the procedure, other than Attachments 2 and 3 for satisfactory completion.

INITIATING CUE:

You are directed to evaluate the data recorded in 0PT-07.2.4a, Attachments 2 and 3, against the acceptance criteria of the test. Report any exceptions to satisfactory performance, and if required, any corrective action required by 0PT-07.2.4a.

Progress Energy

BRUNSWICK NUCLEAR PLANT

C
Continuous Use

DATE COMPLETED Today
UNIT 1 % PWR 100 GMWE 922
SUPERVISOR J. Doe
REASON FOR TEST (check one or more):
✓ Routine surveillance
____ W/O # ____
____ Other (explain) ____

FREQUENCY:
A. Once every 92 days
B. Stem verification - each refueling NOT to exceed two years
C. Leakage walkdown – at least once per 24 months
D. Stroking/timing E21-F015A- each refueling outage
E. Comprehensive Pump Test (CPT) every 2 years

PLANT OPERATING MANUAL

VOLUME X

PERIODIC TEST

UNIT
0

0PT-07.2.4a

CORE SPRAY SYSTEM OPERABILITY TEST - LOOP A

REVISION 58

1.0 PURPOSE

1.1 This test is performed to determine the operability of the Core Spray System A Loop. The test conforms to the requirements specified in Technical Specifications 5.5.6 to perform testing in accordance with ASME OM-Code. This test satisfies Technical Specification surveillance's SR 3.5.1.6 and 3.5.2.5 (for the Core Spray Pump). Performance of Valve Remote Position indicator Verification satisfies the requirements of SR 3.3.3.1.3. This test satisfies a portion of SRs 3.5.1.12 and 3.5.2.7 related to response time testing for Core Spray Pump A and E21-F005A.

1.2 This test also satisfies Technical Specification 5.5.2 for leak tightness inspection every 24 months.

1.3 The following test quantities shall be measured, calculated, or observed and recorded as applicable:

1.3.1 Valve stem travel or disk movement

1.3.2 Proper operation of the valve remote position indicator (RPI)

1.3.3 Time required for valve stroke

1.3.4 Pump inlet pressure

1.3.5 Pump discharge pressure

1.3.6 Pump vibration velocity

1.3.7 Pump flow rate

1.3.8 Pump lubricant level

1.3.9 Pump differential pressure (calculated)

2.0 REFERENCES

2.1 Technical Specifications

2.2 FSAR, Section 6.3

2.3 1(2)OP-18, Core Spray System Operating Procedure

2.4 1(2)OP-51, DC Electrical System Operating Procedure

2.5 0OI-01.08, Control of Equipment and System Status

2.6 Technical Requirements Manual (TRM)

2.7 0SD-18, Core Spray System Description

2.8 NUREG-1482, Revision 1, Guidelines for Inservice Testing at Nuclear Power Plants

2.9 ASME OM Code-2001, Code for Operation and Maintenance of Nuclear Power Plants through ASME OMb Code-2003 Addenda

2.10 NRC Generic Letter 89-04, Guidance on Developing Acceptable Inservice Testing Programs

2.11 0ENP-17, Pump and Valve Inservice Testing (IST)

2.12 0ENP-16.1, IST Pump and Valve Data

R13 2.13 EC 46949, 2-E21-F004A/B and F005A/B Motor Pinion Gear Ratio Change & Compiling Core Spray Surveillance Requirements

2.14 EER 90-0315, Vibration Program for 1A and 2A Core Spray Pumps

R15 2.15 Response to NRC Bulletin 88-04, Potential Safety Related Pump Loss

2.16 D-25024, Sheet 2, Core Spray System, Unit 1

2.17 D-02524, Sheet 2, Core Spray System, Unit 2

2.0 REFERENCES

2.18 ESR 97-00508, ECCS Response Time Testing Methods

2.19 10 CFR 50.67, Accident Source Term

R20 2.20 Second Request for Additional Information, Brunswick Steam Electric Plant, Units 1 and 2 Response to Generic Letter 95-07, "Pressure Locking and Thermal Binding of Safety-Related Power Operated Gate Valves"

2.21 EGR-NGGC-0010, System and Component Trending Program and System Libraries

2.22 0ENP-23, Predictive Maintenance Program

2.23 RFJ-14, Refueling Justification for Stroking E21-F015A/B.

2.24 0AP-54, Plant Leak Management

R25 2.25 Brunswick Steam Electric Plant Units 1 and 2, Issuance of Amendment RE: Alternative Source Term (License Amendments 221 and 246, dated May 30, 2002)

3.0 PRECAUTIONS AND LIMITATIONS

3.1 Attachments 2 and 3 must be reviewed by the IST group.

3.2 Water from the suppression pool should not be injected into the reactor vessel during the performance of this test.

3.3 The following annunciators may alarm during the performance of this test:

3.3.1 *CORE SPRAY OR RHR PUMPS RUNNING* (A-03 2-1).

3.3.2 *CORE SPRAY LOOP A SYS PRESS LOW* (A-01 2-10).

3.4 Vibration velocity testing is required only during Comprehensive Pump Tests (CPT). When required, vibration velocity readings shall be taken at the test positions specified on the data sheet. Since there are multiple test points, ensure that the probe is located on the correct bearing (see Attachment 5) and in the correct direction as specified in the test position number.

3.0 PRECAUTIONS AND LIMITATIONS

3.5 For taking vibration readings, the probe shall be securely mounted at each test position. The probe must be in firm contact with the bearing housing when taking data.

3.6 When taking readings to be recorded on Attachment 2, the indicator/pointer fluctuation should be reduced to a minimum. A valve upstream of the gauge may be throttled to reduce fluctuation. Care should be taken to ensure proper communication between the gauge and main flow path.

3.7 Suitable test gauges may be used in place of any installed instrument. If used, the full-scale range of each analog instrument should be three times the reference value or less, with adequate range to prevent damage during use. Use of alternate test gauges requires recording the test gauge identification number, test gauge calibration date, and test gauge calibration due date.

3.8 Some steps of this test require independent verification.

3.9 An Operator should be stationed to monitor system piping for excessive motion and/or water hammer when a Core Spray Pump is started. The susceptible piping includes Core Spray discharge piping located in the overhead of the 50' elevation of the Reactor Building.

3.10 When opening system drain/vent valves, proper radiological control procedures shall be observed.

3.11 Core Spray Loop A shall be declared inoperable from the beginning of Valve Testing, Section 7.7, to when valve stroking is complete **AND** the *CORE SPRAY LOOP A SYS PRESS LOW* (A-01 2-10) is cleared.

3.12 During system venting, air is not expected in the system. Should air be found, initiate a W/O and notify the System Engineer. Presence of air in the system does not make the system inoperable but does imply component degradation at some point that must be addressed. The test may continue provided air can be removed from the system via the normal venting process.

3.13 The Comprehensive Pump Test (CPT) Acceptance Criteria is only applicable when performing a Comprehensive Pump Test. The Quarterly pump test Acceptance Criteria is only applicable when performing a Quarterly Test.

4.0 PREREQUISITES

4.1 No other testing or maintenance is in progress that will adversely affect the performance of this test.

4.2 The Core Spray System (Loop A) is in standby per 1(2)OP-18.

4.3 The station battery chargers are in operation per 1(2)OP-51.

4.4 **IF** a leakage walkdown is required, **THEN** 0AP-054 Alternative Source Term (AST) Combined Leakage Log value has been recorded on Attachment 4.

4.5 If Comprehensive Pump Testing is required, a temporary 0-30 psig digital pressure gauge, with an accuracy within 0.1%, is installed at A Core Spray Pump suction at *E21-PI-R001A INSTRUMENT DRAIN VALVE, E21-PI-R001A-6.*

5.0 SPECIAL TOOLS AND EQUIPMENT

5.1 Confirm that no active corrective maintenance W/O exists on the following installed instruments. If any active W/O exists, operability of the instrument must be resolved and recorded in the General Comments and Recommendations section before the instrument may be used.

	Instrument	W/R-W/O	W/R-W/O #
5.1.1	E21-PT-N001A	yes / no	_____
5.1.2	E21-FT-N003A	yes / no	_____
5.1.3	E21-PI-R600A	yes / no	_____
5.1.4	E21-FI-R601A	yes / no	_____
5.1.5	E21-PI-2651	yes / no	_____
5.1.6	E21-PI-7119A	yes / no	_____
5.1.7	E21-PI-R001A	yes / no	_____

5.0 SPECIAL TOOLS AND EQUIPMENT

5.2 If CPT is required, a digital 0-30 psig pressure gauge, with an accuracy within 0.1%, is installed at *E21-PI-R001A INSTRUMENT DRAIN VALVE, E21-PI-R001A-6.* If used, note:

5.2.1 ID number n/a

5.2.2 Calibration date n/a

5.2.3 Calibration due date n/a

5.3 Suitable test gauges may be used to obtain data in place of any installed instrument. If used, note:

5.3.1 ID number n/a

5.3.2 Range of instrument n/a

5.3.3 Calibration date n/a

5.3.4 Calibration due date n/a

5.3.5 Parameter measured n/a

5.4 A stopwatch with the following data recorded below:

5.4.1 Stopwatch identification number. SW147

5.4.2 Stopwatch calibration date. 10/1/08

5.4.3 Stopwatch calibration due date. 10/1/09

5.5 If a CPT is performed, Predictive Maintenance personnel will provide the vibration monitoring instrument used for data collection. Record the required data below:

5.5.1 Vibration monitor identification number. n/a

5.5.2 Transducer identification number. n/a

5.5.3 Vibration monitor/transducer calibration date. n/a

5.5.4 Vibration monitor/transducer calibration due date. n/a

5.6 Vent and drain rig

5.7 Tubing, valves, and fittings to install test gauges (as required).

5.8 Ladder for vibration readings, if required

6.0 ACCEPTANCE CRITERIA

This test may be considered satisfactory when the following criteria are met:

6.1 Pump Tests

NOTE:	Acceptance Criteria 6.1.1 includes allowances for a number of items (such as flow diversion through the minimum flow valve, cracks, and the vent hole). Meeting the values shown assure that CS can provide 4100 gpm to the vessel with 113 psid between the Suppression Pool and the vessel as required by Technical Specifications.

R13

6.1.1 *CORE SPRAY PUMP A* operation develops a recirculation flow rate of 4700 gpm or greater against a system head of greater than or equal to 260 psig. (SR 3.5.1.6, SR 3.5.2.5)

6.1.2 *CORE SPRAY PUMP A* discharge pressure increases to greater than or equal to 300 psig within 5 seconds of control switch operation. (SR 3.5.1.12, SR 3.5.2.7)

6.1.3 The pump test data shall be compared to the allowable ranges identified in Test Information Attachment 2.

6.1.4 If deviations fall within the ALERT RANGE of Attachment 2, the frequency of testing shall be doubled until the cause of the deviation is determined and corrected and either the existing reference values reverified or a new set of reference values established per ISTB-6200.

6.1.5 If the deviations fall within the REQUIRED ACTION RANGE of Attachment 2, the pump shall be declared inoperable and not returned to service until the condition has been corrected.

6.1.6 When completed test results show deviations greater than the allowable ACCEPTANCE VALUE RANGE, the instruments involved may be recalibrated and the test rerun. However, this shall not preclude declaring the pump inoperable as required.

6.0 ACCEPTANCE CRITERIA

6.2 Valve Tests

NOTE:	Stroke time shall be measured from the time the control switch is repositioned to the time the valve is fully stroked by light indication. Deviations from this standard method of testing will be specified in the procedure.

6.2.1 Valve Stroke Time

1. Measured stroke times shall be within the ACCEPTABLE RANGE as specified by the minimum and maximum stroke times shown on Attachment 3.

2. For tests where the measured stroke time of a valve exceeds the maximum ACCEPTABLE stroke time but **does not** exceed the LIMITING stroke time, the valve shall be immediately retested or declared INOPERABLE.

   a. If a valve is retested, and the measured stroke time is within the ACCEPTABLE RANGE, the valve may be declared OPERABLE. A Condition Report (CR) shall be generated to ensure the OM Code requirement associated with the evaluation is completed by Engineering.

   b. If a valve is retested and the measured stroke time falls outside the ACCEPTABLE RANGE, a Tracking LCO shall be generated to track the time agreed upon by the Shift Superintendent and BESS in accordance with 0OI-01.08. Otherwise, declare the valve INOPERABLE and meet the requirements of all applicable Technical Specifications.

3. For tests where the measured stroke time of the valve is less than the minimum ACCEPTABLE stroke time, exceeds the LIMITING stroke time or the valve disc or stem fail to exhibit the required change of position, the valve shall immediately be declared INOPERABLE.

4. For Core Spray Injection Valves, E21-F004A and E21-F005A, the measured opening stroke time shall be less than or equal to 23.8 seconds to satisfy Core Spray Loop A response time requirements. (SR 3.5.1.12, SR 3.5.2.7).

6.0 ACCEPTANCE CRITERIA

6.2.2 Valve Full-Stroke Exercise

Full-stroke exercise requirements shall be satisfied by completely cycling a valve from the closed position to the open position and back to the closed position or from the open position to the closed position and back to the open position.

6.2.3 Valve Remote Position Indicator (RPI) Verification

At a refueling frequency (not to exceed 2 years), each RPI Verification identified on Attachment 3 shall be observed to verify that the valve position is accurately indicated in both the open and closed positions by the indicating lights on the RTGB when the valve stem or mechanical position indicator has stopped moving. RPI verification satisfies the requirements of SR 3.3.3.1.3.

6.2.4 Check Valve Exercising

1. Check valve exercising to the full open position shall be satisfied by demonstrating the ability to pass maximum accident condition flow.

2. Check valve exercising to the partial open position shall be satisfied by demonstrating the ability to pass sustained flow.

3. Check valve exercising to the closed position shall be considered satisfactory by demonstrating the ability to establish a differential pressure across the valve seat, or by verifying the absence of flow under pressure while venting the upstream side of the valve seat with pressure on the downstream side.

6.3 Leak Tightness Examination

6.3.1 Identified leakage is recorded on Attachment 4, Leak Identification Data Sheet, and a Work Request (WR) is initiated for any leakage with the exception of packing and gasket leakage less than 5 drops per minute (dpm). The WR shall state that identified leakage is required to be corrected or minimized as required by TS 5.5.2.

6.3.2 For 'through-wall' or 'through-weld' leakage, a Nuclear Condition Report (NCR) is initiated to assess structural integrity of the affected component.

6.0 ACCEPTANCE CRITERIA

R25

6.3.3 The following applicable actions are taken when the combined leakage total (AST Combined Leakage Log value plus leakage from components shown on Attachment 6) is greater than 0 gpm:

1. If the combined leakage is determined to be less than or equal to 1 gallon per minute (gpm), the normal work management process (PRI 3) for correcting leakage is implemented.

2. If the combined leakage is determined to be greater than 1 gpm and less than or equal to 20 gpm, the initiated WR should be identified as PRI 2 to expedite corrective actions to eliminate or reduce identified leakage as soon as plant conditions allow.

3. If the combined leakage is greater than 20 gpm, the initiated WR should be identified as PRI 2 to expedite corrective actions to eliminate or reduce identified leakage as soon as plant conditions allow. A Nuclear Condition Report (NCR) is initiated to have Engineering assess the impact to the AST (10CFR50.67) analysis.

7.0 PROCEDURAL STEPS

Initials

7.1 **OBTAIN** permission from the Unit SCO to perform this test, **AND ENSURE** LCO requirements have been reviewed in accordance with 0OI-01.08. — JD Unit SCO

7.2 **ENSURE** all prerequisites listed in Section 4.0 are met. — JS

7.3 **CONFIRM** required data has been recorded in Section 5.0. — JS

7.4 **NOTIFY** Maintenance the pumps are being tested so they can observe the pump run, if desired. — JS

NOTE:	A leakage walkdown is required to be performed each 24 months per TS 5.5.2.b.

7.5 **IF** a leakage walkdown is required of *CORE SPRAY LOOP A* during the performance of this procedure, **THEN PREPARE** to perform a system walkdown to identify system leaks. — n/a

7.6 **IF** CPT is required, **THEN ENSURE** a 0-30 psig digital pressure gauge is installed at *E21-PI-R001A INSTRUMENT DRAIN VALVE, E21-PI-R001A-6.* — n/a

7.0 PROCEDURAL STEPS

Initials

7.7 Valve Testing

NOTE: Those steps associated with valve remote position indicator (RPI) verification are performed each refueling, not to exceed 2 years, or after maintenance which affects RPI performance. **IF** RPI verification is **NOT** required for this test, **THEN** N/A may be entered in the Initials.

NOTE: Steps 7.7.1 through 7.7.3.2 are required to be performed only during refueling outages in an effort to prevent voiding Core Spray piping during power operations. **IF** these steps are **NOT** required for this test, **THEN** NA may be entered where appropriate.

R20

CAUTION

Core Spray Loop A shall be declared inoperable from the beginning of Valve Testing to when valve stroking is complete **AND** the *CORE SPRAY LOOP A SYS PRESS LOW* (A-01 2-10) is cleared.

7.7.1 **IF** performing during a refueling outage, **THEN ENSURE** Core Spray *FULL FLOW TEST BYP VLV, E21-F015A,* is closed. n/a

7.7.2 **IF** performing during a refueling outage**, THEN OPEN** Core Spray *FULL FLOW TEST BYP VLV, E21-F015A.* n/a

1. **CONFIRM** Core Spray *FULL FLOW TEST BYP VLV, E21-F015A,* valve stem travels to the open position when indicating lights indicate open, **AND RECORD** remote position indicator results on Attachment 3. n/a

7.7.3 **IF** performing during a refueling outage**, THEN CLOSE** Core Spray *FULL FLOW TEST BYP VLV, E21-F015A,* **AND RECORD** valve stroke time and full-stroke exercise on Attachment 3. n/a

1. **CONFIRM** Core Spray *FULL FLOW TEST BYP VLV, E21-F015A*, valve stem travels to the closed position when indicating lights indicate closed, **AND RECORD** remote position indicator results on Attachment 3. n/a

7.0 PROCEDURAL STEPS

Initials

2. **IF** entrance into this procedure was necessary only to perform stroking and timing of *E21-F015A*, **THEN GO TO AND PERFORM** Section 7.8 **AND** applicable steps of Section 7.10. n/a

7.7.4 **ENSURE** Core Spray *OUTBOARD INJECTION VLV, E21-F004A,* is open. JS

7.7.5 **CLOSE** Core Spray *OUTBOARD INJECTION VLV, E21-F004A,* **AND RECORD** valve stroke time on Attachment 3. JS

1. **CONFIRM** Core Spray *OUTBOARD INJECTION VLV, E21-F004A*, valve stem travels to the closed position when indicating lights indicate closed, **AND RECORD** remote position indicator results on Attachment 3. JS

7.7.6 **ENSURE** Core Spray *INBOARD INJECTION VLV, E21-F005A,* is closed. JS

7.7.7 **OPEN** Core Spray *INBOARD INJECTION VLV, E21-F005A,* **AND RECORD** valve stroke time on Attachment 3. JS

1. **CONFIRM** Core Spray *INBOARD INJECTION VLV, E21-F005A,* valve stem travels to the open position when indicating lights indicate open, **AND RECORD** remote position indicator results on Attachment 3. JS

7.7.8 **CLOSE** Core Spray *INBOARD INJECTION VLV, E21-F005A,* **AND RECORD** valve stroke time and full-stroke exercise on Attachment 3. JS

1. **CONFIRM** Core Spray *INBOARD INJECTION VLV, E21-F005A,* valve stem travels to the closed position when indicating lights indicate closed, **AND RECORD** remote position indicator results on Attachment 3. JS

7.0 PROCEDURAL STEPS

Initials

7.7.9 **OPEN** Core Spray *OUTBOARD INJECTION VLV, E21-F004A,* **AND RECORD** valve stroke time and full-stroke exercise on Attachment 3. JS

1. **CONFIRM** Core Spray *OUTBOARD INJECTION VLV, E21-F004A,* valve stem travels to the open position when indicating lights indicate open, **AND RECORD** remote position indicator results on Attachment 3. JS

7.7.10 **ENSURE** Core Spray *TORUS SUCTION VLV, E21-F001A,* is open. JS

7.7.11 **CLOSE** Core Spray *TORUS SUCTION VLV, E21-F001A,* **AND RECORD** valve stroke time on Attachment 3. JS

1. **CONFIRM** Core Spray *TORUS SUCTION VLV, E21-F001A,* valve stem travels to the closed position when indicating lights indicate closed, **AND RECORD** remote position indicator results on Attachment 3. JS

7.7.12 **OPEN** Core Spray *TORUS SUCTION VLV, E21-F001A,* **AND RECORD** the valve stroke time and full-stroke exercise on Attachment 3. JS

1. **CONFIRM** Core Spray *TORUS SUCTION VLV, E21-F001A,* valve stem travels to the open position when indicating lights indicate open, **AND RECORD** remote position indicator results on Attachment 3. JS

7.7.13 **ENSURE** Core Spray *MIN FLOW BYPASS VLV, E21-F031A,* is open. JS

7.7.14 **CLOSE** Core Spray *MIN FLOW BYPASS VLV, E21-F031A,* **AND RECORD** valve stroke time on Attachment 3. JS

1. **CONFIRM** Core Spray *MIN FLOW BYPASS VLV, E21-F031A,* valve stem travels to the closed position when indicating lights indicate closed, **AND RECORD** remote position indicator results on Attachment 3. JS

7.0 PROCEDURAL STEPS

Initials

7.7.15 **OPEN** Core Spray *MIN FLOW BYPASS VLV, E21-F031A,* **AND RECORD** valve stroke time and full-stroke exercise on Attachment 3. JS

1. **CONFIRM** Core Spray *MIN FLOW BYPASS VLV, E21-F031A,* valve stem travels to the open position when indicating lights indicate open, **AND RECORD** remote position indicator results on Attachment 3. JS

NOTE:	A higher pressure indication on *E21-PI-R600A* than on *E21-PI-R001A* confirms *CORE SPRAY PUMP DISCHARGE CHECK VALVE, E21-F003A*, is in the closed position.

7.7.16 **CONFIRM** *CORE SPRAY PUMP DISCHARGE CHECK VALVE, E21-F003A,* is in the closed position **AND RECORD** position on Attachment 3. JS

7.8 Filling and Venting Core Spray Loop A

NOTE:	**IF** air is observed in the discharge piping, a W/R should be prepared to correct any problems.

7.8.1 **IF** the keepfill station for *CORE SPRAY LOOP A* is available, **THEN PERFORM** the following:

1. **ENSURE** that a vent and drain rig is attached to *CORE SPRAY DIVISION I LINE VENT VALVE, E21-V23.* AB

2. **THROTTLE OPEN** *CORE SPRAY DIVISION I LINE VENT VALVE, E21-V23,* until a solid stream of water issues from the vent line, **THEN CLOSE** *E21-V23.* AB

NOTE:	Observation of a solid stream of water from *CORE SPRAY DIVISION I LINE VENT VALVE, E21-V23,* confirms *KEEPFILL STATION CHECK VALVES, E21-F029A* and *E21-F030A* go to the partial open position.

3. **CONFIRM** *KEEPFILL STATION CHECK VALVES, E21-F029A* and *E21-F030A*, go to the partial open position **AND RECORD** position on Attachment 3. AB

7.0 PROCEDURAL STEPS

Initials

CAUTION

Failure to follow Steps 7.8.2.1 through 7.8.2.8 in the order specified may cause the *KEEPFILL RELIEF VALVE, E21-F024A*, to lift and damage the seat of *KEEPFILL STATION PRESSURE CONTROL VALVE, E21-PCV-F026A*.

7.8.2 **IF** it is desired to use the *KEEPFILL STATION E21-PCV-F026A BYPASS VALVE, E21-F028A*, **OR** the valve is already open, **THEN PERFORM** the following:

1. **ENSURE** that a vent and drain rig is attached to *CORE SPRAY DIVISION I LINE VENT VALVE, E21-V23*. AB

2. **ENSURE** *KEEPFILL STATION E21-PCV-F026A DOWNSTREAM ISOLATION VALVE, E21-F027A,* is closed. AB

3. **IF** necessary, **THROTTLE OPEN** *KEEPFILL STATION E21-PCV-F026A BYPASS VALVE, E21-F028A.* AB

4. **THROTTLE OPEN** *CORE SPRAY DIVISION I LINE VENT VALVE, E21-V23*, until a solid stream of water issues from the vent line, **THEN CLOSE** *E21-V23*. AB

NOTE: Observation of a solid stream of water from *CORE SPRAY DIVISION I LINE VENT VALVE, E21-V23,* confirms *KEEPFILL STATION CHECK VALVES, E21-F029A* and *E21-F030A* go to the partial open position.

5. **CONFIRM** *KEEPFILL STATION CHECK VALVES, E21-F029A* and *E21-F030A*, go to the partial open position **AND RECORD** position on Attachment 3. AB

6. **CLOSE** *KEEPFILL STATION E21-PCV-F026A BYPASS VALVE, E21-F028A.* AB/CO
Ind.Ver.

7.0 PROCEDURAL STEPS

Initials

7. **THROTTLE OPEN** *CORE SPRAY DIVISION I LINE VENT VALVE, E21-V23,* until *CORE SPRAY PUMP A DISCHARGE PRESSURE INDICATOR, E21-PI-R600A* (Panel H12-P601), indicates 40 to 70 psig, **THEN CLOSE** *E21-V23.* — AB

8. **SLOWLY OPEN** *KEEPFILL STATION E21-PCV-F026A DOWNSTREAM ISOLATION VALVE, E21-F027A.* — AB/CO Ind.Ver.

7.8.3 **IF** required, **REMOVE** the vent and drain rig from the *CORE SPRAY DIVISION I LINE VENT VALVE, E21-V23.* — AB

7.8.4 **CONFIRM** *CORE SPRAY LOOP A SYS PRESS LOW* (A-01 2-10) is cleared. — AB

7.9 Pump Testing

7.9.1 **IF** Quarterly testing is to be performed, **THEN OBSERVE** *CORE SPRAY PUMP A* suction pressure (stopped), as indicated on *E21-PI-R001A,* **AND RECORD** on Attachment 2. — JS

7.9.2 **IF** Comprehensive Pump Testing is to be performed, **THEN PERFORM** the following:

1. **OPEN** *E21-PI-R001A INSTRUMENT DRAIN VALVE, E21-PI-R001A-6.* — n/a

2. **OBSERVE** *CORE SPRAY PUMP A* suction pressure (stopped), as indicated on temporary gauge, **AND RECORD** on Attachment 2. — n/a

7.0 PROCEDURAL STEPS

Initials

CAUTION

Do **NOT** cross-connect the Nuclear and Conventional Service Water headers by simultaneously opening *NUC SW TO VITAL HEADER VLV, SW-V117*, and *CONV SW TO VITAL HEADER VLV, SW-V111*.

7.9.3 **ENSURE** one of the following valves is open:

1. *NUC SW TO VITAL HEADER VLV, SW-V117* JS

OR

2. *CONV SW TO VITAL HEADER VLV, SW-V111.* n/a

7.9.4 **ENSURE** *VITAL HEADER XTIE VLV, SW-V118*, is open. JS

7.9.5 **ENSURE** *WELL WATER TO VITAL HEADER VALVE, SW-V141,* is closed. JS

7.9.6 **STATION** an operator to monitor system piping for excessive motion and water hammer when a Core Spray pump is started. JS

7.9.7 **ENSURE** proper *CORE SPRAY PUMP A* lubricant level. JS

7.0 PROCEDURAL STEPS

Initials

NOTE: The following step requires that the time interval from pump start to discharge pressure at 300 psig be measured with a stopwatch. It may be advisable to place a temporary non-destructive mark on the pressure indicator at 300 psig to assist in timing.

R15

CAUTION

Operation of the Core Spray Pump in the minimum flow mode should be minimized.

7.9.8 **START** *CORE SPRAY PUMP A* while monitoring pump discharge pressure on *E21-PI-R600A*, **AND CONFIRM** pressure increases to greater than or equal to 300 psig in less than or equal to 5.0 seconds. JS

Response Time 4.0 sec.

7.9.9 **RECORD** the time that *CORE SPRAY PUMP A* was started. JS

Time 1200

7.9.10 **ENSURE** the following:

1. *CORE SPRAY DIVISION I ROOM COOLER FAN* has started. JS
2. *SERVICE WATER OUTLET VALVE, SW-V128*, is open. JS

7.9.11 **THROTTLE OPEN** Core Spray *FULL FLOW TEST BYP VLV, E21-F015A,* to obtain greater than or equal to 4700 gpm as indicated on *E21-FI-R601A.* JS

7.9.12 **WHEN** flow is greater than 603 gpm, **CONFIRM** that the Core Spray *MIN FLOW BYPASS VLV, E21-F031A,* closes. JS

R13

7.9.13 **CONFIRM** *CORE SPRAY PUMP A* discharge pressure is greater than or equal to 260 psig, as indicated on *E21-PI-R600A.* JS

7.0 PROCEDURAL STEPS

Initials

NOTE: A higher pressure indication on *E21-PI-R600A* than on *E21-PI-2651* confirms *KEEPFILL STATION CHECK VALVES, E21-F030A* or *E21-F029A*, goes to the closed position. If indication on *E21-PI-2651* is "pegged", then proceed to Step 7.9.15. If test is satisfactory, then N/A Step 7.9.15.

NOTE: Operability of the keep-fill check valves is performed as a pair. If the check valves cannot be determined to be closed, then a W/R shall be written to repair or replace both *E21-F030A* and *E21-F029A*.

7.9.14 **CONFIRM** *KEEPFILL STATION CHECK VALVES, E21-F030A* or *E21-F029A*, goes to the closed position, **AND RECORD** on Attachment 3. JS

NOTE: Confirming the absence of flow under pressure while venting at *E21-PI-2651 INSTRUMENT DRAIN VALVE, E21-IV-786*, satisfies reverse exercising requirements for *KEEPFILL STATION CHECK VALVES, E21-F030A* and/or *E21-F029A*. This does **NOT** imply that drainage will not be present.

R15 7.9.15 **IF** test conditions in Step 7.9.14 cannot be met, **THEN PERFORM** the following steps to satisfy exercising *KEEPFILL STATION CHECK VALVES, E21-F030A* and/or *E21-F029A*, to the closed position:

1. **CONNECT** hose at *E21-PI-2651 INSTRUMENT DRAIN VALVE, E21-IV-786*, **AND ROUTE** to floor drain. n/a
2. **CLOSE** *KEEPFILL STATION E21-PCV-F026A UPSTREAM ISOLATION VALVE, E21-F025A.* n/a
3. **ENSURE** *CORE SPRAY LOOP A KEEPFILL ISOLATION VALVE, TD-V13,* is closed. n/a
4. **OPEN** *E21-PI-2651 INSTRUMENT DRAIN VALVE, E21-IV-786,* **AND ALLOW** piping to drain for a minimum of 3 minutes. n/a
5. **CONFIRM** the absence of pressurized flow from drain hose **AND RECORD** *KEEPFILL STATION CHECK VALVES, E21-F030A* and/or *E21-F029A* go to the closed position on Attachment 3. n/a

7.0 PROCEDURAL STEPS

Initials

6. **CLOSE** *E21-PI-2651 INSTRUMENT DRAIN VALVE, E21-IV-786.* ___/N/a___ Ind.Ver.

> **CAUTION**
>
> Damage to the *KEEPFILL STATION PRESSURE CONTROL VALVE, E21-PCV-F026A*, may occur if it is placed in service too rapidly.

7. **SLOWLY OPEN** *KEEPFILL STATION E21-PCV-F026A UPSTREAM ISOLATION VALVE, E21-F025A.* ___/N/a___ Ind.Ver.

7.9.16 **SLOWLY OPEN** *E21-PI-7119A INSTRUMENT ISOLATION VALVE, E21-V5000.* ___AB___

> **NOTE:** The Core Spray Pump shall be operated under conditions as stable as the system permits prior to recording test data.

7.9.17 **THROTTLE** Core Spray *FULL FLOW TEST BYP VLV, E21-F015A,* to obtain 4700 gpm as indicated on *E21-FI-R601A*. ___JS___

7.9.18 **IF** the Quarterly test is being performed, **THEN PERFORM** the following:

1. **OBSERVE** *CORE SPRAY PUMP A* suction pressure (running), as indicated on *E21-PI-R001A,* **AND RECORD** on Attachment 2. ___JS___

2. **OBSERVE** *CORE SPRAY PUMP A* discharge pressure, as indicated on *E21-PI-7119A,* **AND RECORD** on Attachment 2. ___JS___

3. **CALCULATE** Core Spray Pump differential pressure, **AND RECORD** in Quarterly Pump DP on Attachment 2. ___JS___

4. **RECORD** *CORE SPRAY PUMP A* System flow, as indicated on *FLOW INDICATOR E21-FI-R601A,* on Attachment 2. ___JS___

7.0 PROCEDURAL STEPS

Initials

7.9.19 **IF** Comprehensive Pump Testing is being performed, **THEN PERFORM** the following:

1. **OBSERVE** *CORE SPRAY PUMP A* suction pressure (running), as indicated on temporary gauge, **AND RECORD** on Attachment 2. n/a

2. **OBSERVE** *CORE SPRAY PUMP A* discharge pressure, as indicated on *E21-PI-7119A,* **AND RECORD** on Attachment 2. n/a

3. **CALCULATE** Core Spray Pump differential pressure, **AND RECORD** in CPT Pump DP on Attachment 2. n/a

4. **OBSERVE** *CORE SPRAY PUMP A* System flow, as indicated on *FLOW INDICATOR E21-FI-R601A,* **AND RECORD** on Attachment 2. n/a

5. **MEASURE** *CORE SPRAY PUMP A* vibration velocity (in/sec peak) at the test positions indicated, **AND RECORD** on Attachment 2. n/a

7.9.20 **ENSURE** proper lubricant level **AND RECORD** on Attachment 2. AB

NOTE: Flow indication of at least 5000 gpm on *FLOW INDICATOR E21-FI-R601A* confirms *CORE SPRAY PUMP A DISCHARGE CHECK VALVE, E21-F003A,* goes to the full open position.

7.9.21 **THROTTLE** Core Spray *FULL FLOW TEST BYP VLV, E21-F015A,* to obtain 5000 gpm as indicated on *E21-FI-R601A.* JS

7.9.22 **CONFIRM** *CORE SPRAY PUMP A DISCHARGE CHECK VALVE, E21-F003A,* fully opens **AND RECORD** on Attachment 3. JS

NOTE: A leakage walkdown is required to be performed at least once per 24 months per TS 5.5.2.

7.9.23 **IF** required, **PERFORM** a leakage walkdown of the components identified on Attachment 6, **AND RECORD** leakage on Attachment 4, Leak Identification Data Sheet. n/a

7.0 PROCEDURAL STEPS

Initials

7.9.24 **CLOSE** *E21-PI-7119A INSTRUMENT ISOLATION VALVE, E21-V5000.* AB / CO
Ind.Ver.

7.9.25 **IF** CPT was performed, **THEN CLOSE** *E21-PI-R001A INSTRUMENT DRAIN VALVE, E21-PI-R001A-6.* / N/a
Ind.Ver.

7.9.26 **CLOSE** Core Spray *FULL FLOW TEST BYP VLV, E21-F015A.* JS

7.9.27 **WHEN** *CORE SPRAY LOOP A* flow is less than 603 gpm, **ENSURE** that Core Spray *MIN FLOW BYPASS VLV, E21-F031A,* opens. JS

7.9.28 **STOP** *CORE SPRAY PUMP A* **AND RECORD** the time. JS

Time 1225

7.9.29 **CONFIRM** the following:

1. *CORE SPRAY DIVISION I ROOM COOLER FAN* is off. JS

2. *SERVICE WATER OUTLET VALVE, SW-V128,* is closed. JS

7.9.30 **IF** required, **ENSURE** the following valves are closed:

1. *NUC SW TO VITAL HEADER VLV, SW-V117* JS / AB
Ind.Ver.

2. *CONV SW TO VITAL HEADER VLV, SW-V111* JS / AB
Ind.Ver.

7.9.31 **CALCULATE** *CORE SPRAY PUMP A* run time. JS

1225 - 1200 = 25
7.9.28 7.9.9

7.0 PROCEDURAL STEPS

Initials

7.9.32 **IF** required to relieve high system pressure condition or ensure the system is filled and vented, **THEN PERFORM** the following

1. **ENSURE** a vent and drain rig is attached to *CORE SPRAY DIVISION I LINE VENT VALVE, E21-V23.* n/a

2. **THROTTLE OPEN** *CORE SPRAY DIVISION I LINE VENT VALVE, E21-V23,* until a solid stream of water issues from the vent line, **THEN CLOSE** *E21-V23.* n/a

3. **IF** required, **REMOVE** the vent and drain rig from *CORE SPRAY DIVISION I LINE VENT VALVE, E21-V23.* n/a

7.10 System Restoration

7.10.1 **ALIGN** valves as specified in Table 1. JS

NOTE:	Independent verification is required for valve lineup.

TABLE 1
SYSTEM VERIFICATION LINEUP SHEET

VALVE NO.	DESCRIPTION	REQUIRED POSITION	INITIALS IND. VER.
E21-F001A	Core Spray Pump A Suppression Pool Suction Valve	OPEN	JS / AB
E21-F004A	Core Spray Outboard Injection Valve	OPEN	JS / AB
E21-F005A	Core Spray Inboard Injection Valve	CLOSED	JS / AB
E21-F031A	Core Spray Minimum Flow Bypass Valve	OPEN	JS / AB
E21-F015A	Core Spray Test Bypass Valve	CLOSED	JS / AB
E21-V23	Core Spray Division I Line Vent Valve	CLOSED	JS / AB

7.10.2 **IF** installed, **REMOVE** drain hose installed at *E21-PI-2651, INSTRUMENT DRAIN VALVE, E21-IV-786.* JS

7.10.3 **IF** CPT was performed, **THEN REMOVE** the temporary gauge at *E21-PI-R001A INSTRUMENT DRAIN VALVE, E21-PI-R001A-6.* n/a

7.0 PROCEDURAL STEPS

Initials

7.10.4 **IF** necessary, **REMOVE** the temporary mark on pressure indicator *E21-PI-R600A*. N/A

7.10.5 **ENSURE** the required information has been recorded on the cover page. JS

7.10.6 **NOTIFY** the Unit SCO when this test is complete or found to be unsatisfactory. JS

ATTACHMENT 1
Page 1 of 1
Certification and Review Form

General Comments and Recommendations none

	Initials	Name (Print)
Performed by:	JS	John Smith
	AB	Anne Bode
	CO	Charles Down

Exceptions to satisfactory performance none

Corrective action required none

NOTE: Pump test data shall be analyzed within 96 hours after completion of this PT. SCO review/approval of the PT satisfies this ASME Code requirement.

Test procedure has been satisfactorily completed:

Unit SCO: _____ _____
Signature Date

Test procedure has **NOT** been satisfactorily completed:

Unit SCO: _____ _____
Signature Date

Test has been reviewed by:

Shift Superintendent _____ _____
Signature Date

ATTACHMENT 2
Page 1 of 2
Unit 1 Core Spray Pump A Test Information Data Sheet

1. The lubricant level (pump running) is normal. JS

2. Calculate pump dP as follows:

Pump discharge pressure - suction pressure (run) = pump dP

265.0 - 5.0 = 270.0

NOTE: Pump vibration measurement is required only during CPT. Vibration is measured at the test point marked on the pump for the correct bearing number and direction as indicated by the Test Position number as follows:

- the number indicates the bearing number from Attachment 5
- for position, N=North, S=South, E=East, W=West
- for direction, A=Axial, H=Horizontal, V=Vertical

NOTE: Reference values for pump suction and discharge pressures are provided for determining the suitability of alternate test gauges, if used.

UNIT 1 CORE SPRAY PUMP A TEST DATA							
TEST PARAMETER	ACTUAL VALUE	REFERENCE VALUE	ACCEPTANCE VALUE RANGE	ALERT RANGE		REQUIRED ACTION RANGE	
				LOW	HIGH	LOW	HIGH
Suction Press. (Stopped) psig	6.0	6.0	4 to 8	N/A	N/A	< 4	> 8
Suction Press. (Running) psig	5.0	4.0	N/A	N/A	N/A	N/A	N/A
Discharge Press. Psig	265.0	290.0	N/A	N/A	N/A	N/A	N/A
Quarterly Pump DP psid	270.0	290.9	261.9 to 319.9	N/A	N/A	< 261.9	> 319.9
CPT Pump DP psid	n/a	290.9	270.6 to 299.6	261.9 to <270.6	N/A	< 261.9	> 299.6
Flow Rate gpm	4700	4,700	N/A	N/A	N/A	N/A	N/A
Vibration-vel (in/s peak) Position 1S H	.170	0.133	0 to 0.325	N/A	> 0.325 to 0.700	N/A	> 0.700
Vibration-vel (in/s peak) Position 1W A	.395	0.195	0 to 0.325	N/A	> 0.325 to 0.700	N/A	> 0.700
Vibration-vel (in/s peak) Position 1W H	.165	0.144	0 to 0.325	N/A	> 0.325 to 0.700	N/A	> 0.700

Performed By (Signature) John Smith Date Today Time now

Reviewed, IST Group (Signature) _____ Date _____

ATTACHMENT 2
Page 2 of 2

Unit 2 Core Spray Pump A Test Information Data Sheet

1. The lubricant level (pump running) is normal. _____

2. Calculate pump dP as follows:

   Pump discharge pressure - suction pressure (run) = pump dP

   _____ - _____ = _____

NOTE: Pump vibration measurement is required only during CPT. Vibration is measured at the test point marked on the pump for the correct bearing number and direction as indicated by the Test Position number as follows:

- the number indicates the bearing number from Attachment 5
- for position, N=North, S=South, E=East, W=West
- for direction, A=Axial, H=Horizontal, V=Vertical

NOTE: Reference values for pump suction and discharge pressures are provided for determining the suitability of alternate test gauges, if used.

UNIT 2 CORE SPRAY PUMP A TEST DATA							
TEST PARAMETER	ACTUAL VALUE	REFERENCE VALUE	ACCEPTANCE VALUE RANGE	ALERT RANGE		REQUIRED ACTION RANGE	
				LOW	HIGH	LOW	HIGH
Suction Press. (Stopped) psig		6.0	4 to 8	N/A	N/A	< 4	> 8
Suction Press. (Running) psig		4.0	N/A	N/A	N/A	N/A	N/A
Discharge Press. Psig		290.0	N/A	N/A	N/A	N/A	N/A
Quarterly Pump DP psid		283.1	260.0 to 311.4	N/A	N/A	< 260.0	> 311.4
CPT Pump DP psid		283.1	263.3 to 291.5	260.0 to <263.3	N/A	< 260.0	> 291.5
Flow Rate gpm		4,700	N/A	N/A	N/A	N/A	N/A
Vibration-vel (in/s peak) Position 1S H		0.230	0 to 0.325	N/A	> 0.325 to 0.700	N/A	> 0.700
Vibration-vel (in/s peak) Position 1W A		0.212	0 to 0.325	N/A	> 0.325 to 0.700	N/A	> 0.700
Vibration-vel (in/s peak) Position 1W H		0.156	0 to 0.325	N/A	> 0.325 to 0.700	N/A	> 0.700

Performed By (Signature) _____ Date _____ Time _____

Reviewed, IST Group (Signature) _____ Date _____

Unit 1 Core Spray System (Loop A) Valve Test Information Sheet

Valve Number	Stroke Direction	Remote Position Indication (Initials)		Stroke Time Test (sec)	Stroke Time Acceptance Criteria (Seconds)				Fail-Safe Test (Initials)	Full-Stroke Exercise (Initials)	Check Valve Exercise (Initials)	Valve SAT/ UNSAT
		Stem	Ind. Lights		Acceptable Range							
					Minimum (≥)	Maximum (≤)	Limiting (≤)	Ref. Stroke Time				
1-E21-F015A	OPEN	n/a	n/a	N/A	N/A	N/A	N/A	N/A	N/A	N/A	N/A	SAT
1-E21-F015A	CLOSED			37.05	35.90	48.50	52.70	42.20	N/A	JS	N/A	SAT
1-E21-F004A	CLOSED			10.40	9.85	13.33	14.49	11.59	N/A	N/A	N/A	SAT
1-E21-F005A	OPEN			14.01	10.01	13.55	14.73	11.78	N/A	N/A	N/A	SAT
1-E21-F005A	CLOSED			10.11	9.88	13.36	14.53	11.62	N/A	JS	N/A	SAT
1-E21-F004A	OPEN			11.45	9.99	13.51	14.69	11.75	N/A	JS	N/A	SAT
1-E21-F001A	CLOSED			75.05	68.51	92.69	100.75	80.60	N/A	N/A	N/A	SAT
1-E21-F001A	OPEN			80.10	72.73	98.39	106.95	85.56	N/A	JS	N/A	SAT
1-E21-F031A	CLOSED			10.70	11.00	14.80	16.10	12.90	N/A	N/A	N/A	SAT
1-E21-F031A	OPEN			13.00	12.30	16.50	18.00	14.40	N/A	JS	N/A	SAT
1-E21-F003A	CLOSED	N/A	N/A	N/A	N/A	N/A	N/A	N/A	N/A	N/A	JS	SAT
1-E21-F029A	PART OPEN	N/A	N/A	N/A	N/A	N/A	N/A	N/A	N/A	N/A	JS	SAT
1-E21-F030A	PART OPEN	N/A	N/A	N/A	N/A	N/A	N/A	N/A	N/A	N/A	JS	SAT
1-E21-F029A	CLOSED	N/A	N/A	N/A	N/A	N/A	N/A	N/A	N/A	N/A	JS	SAT
1-E21-F030A	CLOSED	N/A	N/A	N/A	N/A	N/A	N/A	N/A	N/A	N/A	JS	SAT
1-E21-F003A	OPEN	N/A	N/A	N/A	N/A	N/A	N/A	N/A	N/A	N/A	JS	SAT

NOTE: Spaces next to valve numbers shall be filled in with an appropriate entry, initials, or N/A.

Performed by (signature) _____ Date _____

Performed by (signature) _____ Date _____

Reviewed, IST Group (signature) _____ Date _____

Unit 2 Core Spray System (Loop A) Valve Test Information Sheet

Valve Number	Stroke Direction	Remote Position Indication (Initials)		Stroke Time Test (sec)	Stroke Time Acceptance Criteria (Seconds)				Fail-Safe Test (Initials)	Full-Stroke Exercise (Initials)	Check Valve Exercise (Initials)	Valve SAT/ UNSAT
		Stem	Ind. Lights		Acceptable Range			Ref. Stroke Time				
					Minimum (≥)	Maximum (≤)	Limiting (≤)					
2-E21-F015A	OPEN			N/A	N/A	N/A	N/A	N/A	N/A	N/A	N/A	
2-E21-F015A	CLOSED				36.30	49.10	53.30	42.70	N/A		N/A	
2-E21-F004A	CLOSED				9.38	12.70	13.80	11.04	N/A	N/A	N/A	
2-E21-F005A	OPEN				10.20	13.80	15.00	12.00	N/A	N/A	N/A	
2-E21-F005A	CLOSED				10.30	13.94	15.15	12.12	N/A		N/A	
2-E21-F004A	OPEN				9.61	13.01	14.14	11.31	N/A		N/A	
2-E21-F001A	CLOSED				70.00	94.60	102.90	82.34	N/A	N/A	N/A	
2-E21-F001A	OPEN				67.20	90.80	98.70	79.03	N/A		N/A	
2-E21-F031A	CLOSED				12.20	16.40	17.90	14.33	N/A	N/A	N/A	
2-E21-F031A	OPEN				13.10	17.70	19.20	15.41	N/A		N/A	
2-E21-F003A	CLOSED	N/A	N/A	N/A	N/A	N/A	N/A	N/A	N/A	N/A		
2-E21-F029A	PART OPEN	N/A	N/A	N/A	N/A	N/A	N/A	N/A	N/A	N/A		
2-E21-F030A	PART OPEN	N/A	N/A	N/A	N/A	N/A	N/A	N/A	N/A	N/A		
2-E21-F029A	CLOSED	N/A	N/A	N/A	N/A	N/A	N/A	N/A	N/A	N/A		
2-E21-F030A	CLOSED	N/A	N/A	N/A	N/A	N/A	N/A	N/A	N/A	N/A		
2-E21-F003A	OPEN	N/A	N/A	N/A	N/A	N/A	N/A	N/A	N/A	N/A		

NOTE: Spaces next to valve numbers shall be filled in with an appropriate entry, initials, or N/A.

Performed by (signature) _____ Date _____

Performed by (signature) _____ Date _____

Reviewed, IST Group (signature) _____ Date _____

R25

Leak Identification Data Sheet

NOTE:	For packing and gaskets, a WR is required to be initiated and documented if leakage exceeds 5 dpm.
NOTE:	Each WR/WO listed is required to state that identified leakage is to be corrected or minimized as required by TS 5.5.2.

SYSTEM: Core Spray System A Loop Unit _____

Component	Nature of Leak	Leakage Rate[1]	WR/WO#
	Sum of Identified Leakage:		
	AST Combined Leakage Log value from 0AP-054:	+	
	Total:	=	

[1] Conversion Factor: (dpm x 1.6 x 10^{-3}) ÷ 60 = gpm

Examination Performed by: _____/_____ Date _____
(Signature) (Print Name)

Examination Performed by: _____/_____ Date _____
(Signature) (Print Name)

ATTACHMENT 5
Page 1 of 1

Core Spray Pump
Pump Vibration Test Position Numbers (Bearing Numbers)

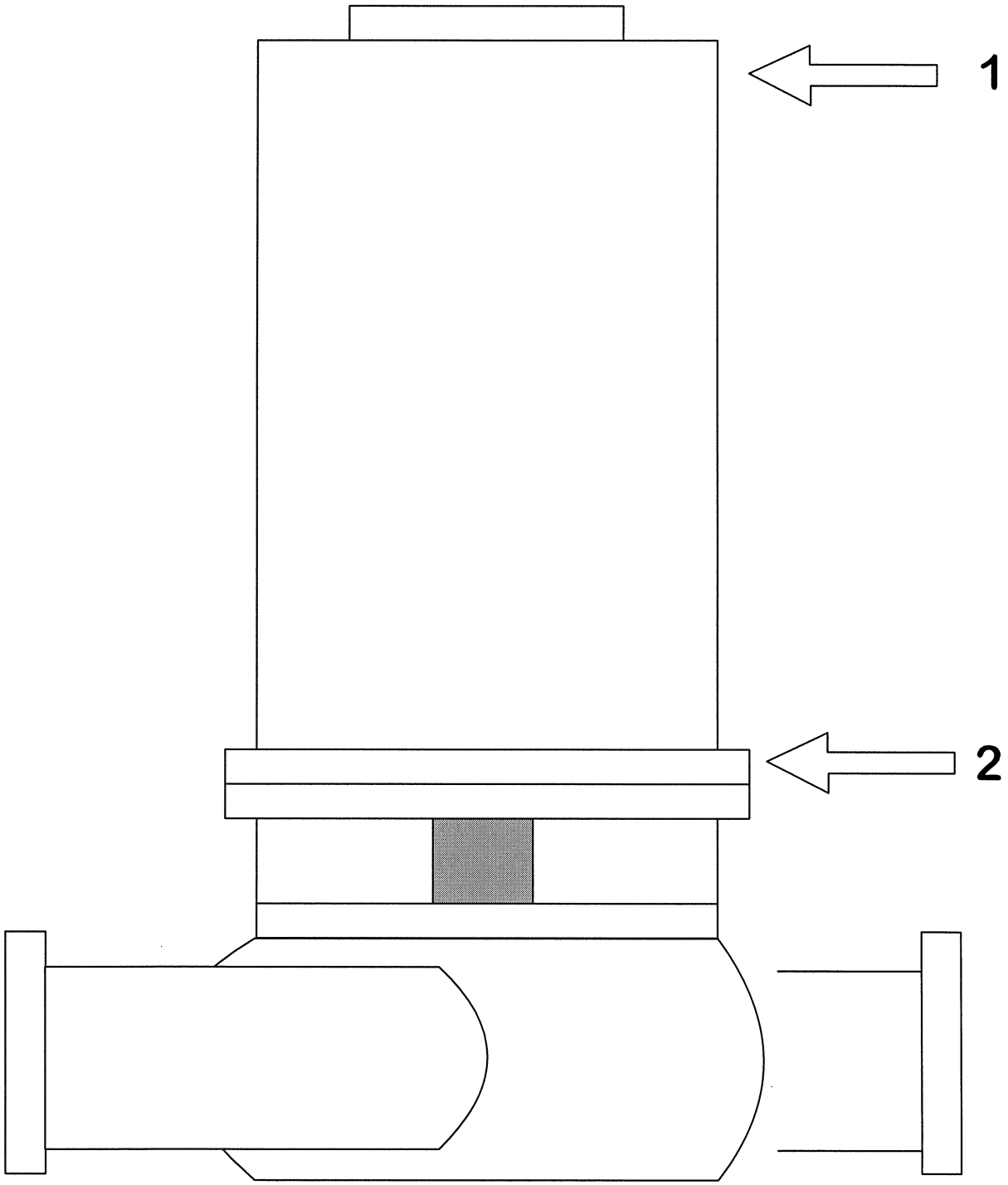

Leakage Inspection Boundary

NOTE:	Because of drawing limitations, instrumentation lines connected to boundaries are not shown. The leakage inspection boundary for instrumentation lines extends to and includes the last instrument root valve before the instrument.
NOTE:	The Suppression Chamber is **NOT** required to be examined. It is shown for clarification only

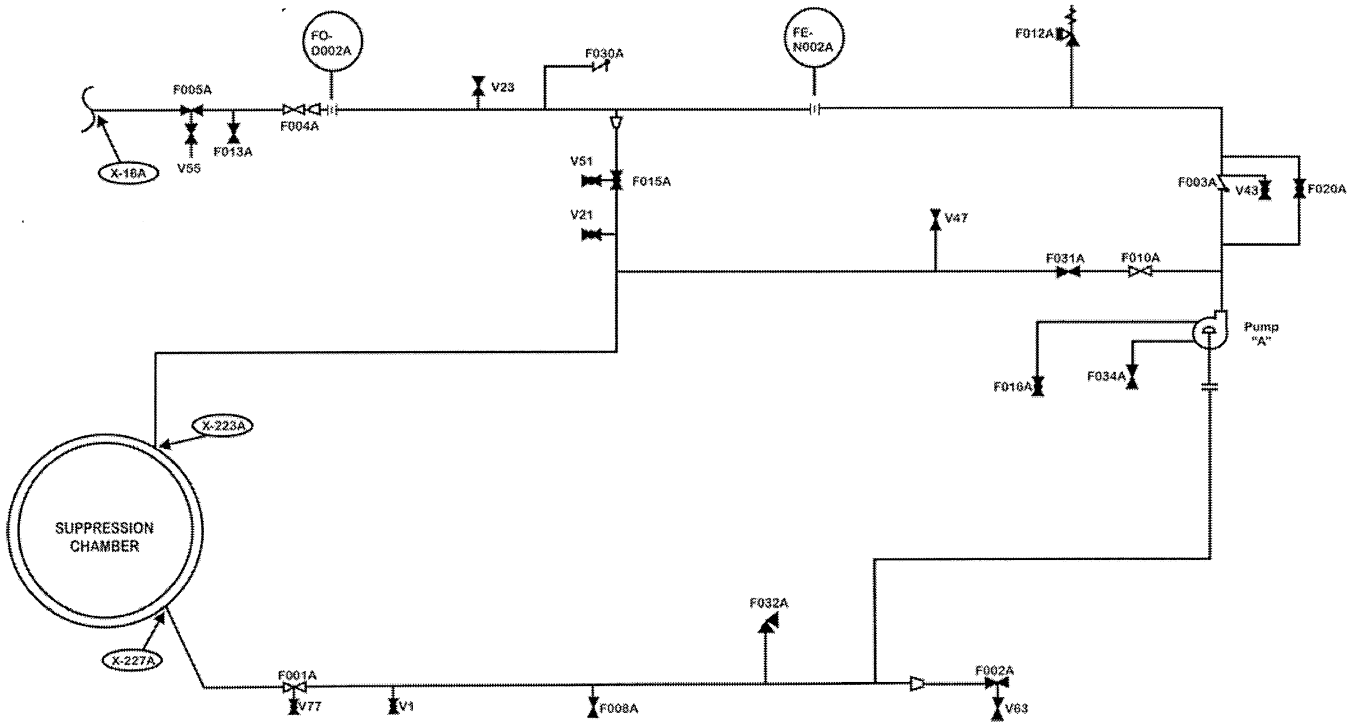

Leakage Inspection Guidance

When performing leakage inspections for TS 5.5.2, the following guidance should be followed to the extent practical.

1. The leakage inspection should be conducted by examining the accessible exposed surfaces for evidence of leakage.

2. For insulated components or components whose external surfaces are inaccessible for direct inspection, the leakage inspection should be performed on surrounding areas (i.e. floors or equipment surfaces located under the component) for evidence of leakage or other areas to which leakage may be channeled.

3. For vertical surfaces, the inspection of the lowest elevation where leakage may be detected should be performed.

4. For ALARA, a leakage inspection using remote visual equipment or the use of an installed leakage detection system to identify leakage is acceptable.

REVISION SUMMARY

Revision 58 incorporates upgrade of ASME OM Code to 2001 with 2003 Addenda; incorporates Comprehensive Pump Test criteria; incorporates check valve testing of E21-F003A close and E21-F029A/30A part open.

Revision 57 incorporates PRR214582 (CORR 207570-14) and PRR20653 (CORR 207575-16) program changes to perform a Leakage Walkdown in accordance with TS 5.5.2. Changes include documenting leakage as required for Alternate Source Term (License Amendments 221 and 246 dated May 30, 2002).

Revision 56 adds Step 7.8.33 to vent system as required.

Revision 55 incorporated EC63657 by changing pump flow rate from 4626 to 4700 gpm (steps 6.1.1 and 7.8.10), adding a new step (7.8.23) to increase flow to 5000 gpm, changing Note prior to new step (7.8.23) to 5000 gpm, remove the statement inside the "( )" in Step 2.13, and changed the IST pump psid value to 260.

Revision 54 makes an editorial correction to add the Tech Spec reference to Section 6.3 per NAS Observation 69604 (This reference is already listed in the Purpose Section).

Revision 53 revises the stroke time acceptance criteria for 1-E21-F004A and 1-E21-F005A to reflect the gear ratio change incorporated IAW EC 51210/54126.

Revision 52 makes editorial corrections to update the cover page and word processing format and makes changes to reflect EC 46949, Rev 2, re-evaluation of CS injection valve and pump performance requirements.

Revision 51 revises the stroke time acceptance criteria for 2-E21-F004A and 2-E21-F005A to reflect the gear ratio change incorporated IAW EC 46949/EC 50010.

Revision 50 adds "if performing during a refueling outage" to clarify required testing associated with stroking E21-F015A.

Revision 49 updates stroke time data for 2-E21-F005A iaw the IST program; added frequency of each refueling outage for stroking/timing E21-F015A; added NOTES/step informing operators E21-F015A is required to be stroked/timed during refuel outages only and routes procedure users to applicable sections if test is being performed only to test E21-F015A

Revision 48 removes reference to specific vibration instrument, IRD Model 890, and replaces with generic reference; Add P&L and caution identifying Core Spray Loop A is inop during valve stroking and until the Loop A low pressure alarm clears.

Revision 47 revises purpose to include Tech Spec Section 5.5.2.a and adds Precaution and Limitations regarding actions if air is found in the system during testing.

PROGRESS ENERGY CAROLINAS
BRUNSWICK TRAINING SECTION

JOB PERFORMANCE MEASURE
ADMINISTRATIVE

A-1B-R/S

LESSON TITLE: Evaluate Reactor Water Level Instruments using Caution 1

LESSON NUMBER:

REVISION NO: 0

SAFETY CONSIDERATIONS:

None.

EVALUATOR NOTES: (Do not read to trainee)

1. The applicable procedure section **WILL** be provided to the trainee.
2. If this is the first JPM of the JPM set, read the JPM briefing contained NUREG 1021, Appendix E, or similar to the trainee.
3. Task standards (i.e. pass/fail criteria) for each JPM step are *ITALICIZED* below the step.

Read the following to trainee.

TASK CONDITIONS:

Condition 1

Instrument	Reading	Available/Unavailable
Reactor Water Level (N004A)	153 inches	
Reactor Water Level (N004B)	154 inches	
Reactor Water Level (N004C)	151 inches	
Reactor Pressure	100 psig	
1258-1	340F	
1258-3	360F	
1258-2	330F	
1258-4	350F	

Condition 2

Instrument	Reading	Available/Unavailable
Reactor Water Level (N026A)	5 inches	
Reactor Water Level (N026B)	15 inches	
Reactor Pressure	950 psig	
1258-1	210F	
1258-3	225F	
1258-2	215F	
1258-2	207F	
Reactor Bldg 50ft Temperature	150F	

Condition 3

Instrument	Reading	Available/Unavailable
Reactor Water Level (N036)	-125 inches	
Reactor Water Level (N037)	-135 inches	
Reactor Pressure	300 psig	
1258-1	420F	
1258-3	435F	
1258-2	430F	
1258-4	445F	
Recirc. Pumps	OFF	

Condition 4

Instrument	Reading	Above TAF / Below TAF
Reactor Water Level N036/37	-40 inches	
Reactor Pressure	600 psig	
Reference Leg Area Temperature	220F	
Recirc. Pumps	OFF	

Condition 5

Instrument	Reading	Above LL-4 / Below LL-4
Reactor Water Level N036/37	-65 inches	
Reactor Pressure	800 psig	
Reference Leg Area Temperature	180F	
Recirc. Pumps	OFF	

INITIATING CUE:

Using CAUTION 1 (Unit Two) and the indications provided in:

- Condition 1, determine if level instruments N004A/B/C are available or unavailable for use in determining reactor water level.
- Condition 2, determine if level instruments N026A/B are available or unavailable for use in determining reactor water level.
- Condition 3, determine if level instruments N036/N037 are available or unavailable for use in determining reactor water level.
- Condition 4, determine if reactor water level is currently above or below TAF.
- Condition 5, determine if reactor water level is currently above or below LL-4.

Provide answer sheet to the examiner upon completion of tasks.

PERFORMANCE CHECKLIST

NOTE: Sequence is assumed unless denoted in the **Comments**.

Step 1 – Using the Narrow Range Level Instruments section of CAUTION 1, plot the given parameters of Condition 1 to determine availability of N004A/B/C.

Plot and determine that Condition 1 parameters plot in the UNSAFE region of the Reactor Saturation Limit Curve; plot and determine that N004A/B are AVAILABLE; plot and determine that N004C is UNAVAILABLE.

**** CRITICAL STEP** SAT/UNSAT***

Step 2 - Using the Wide Range Level Instruments section of CAUTION 1, plot the given parameters of Condition 2 to determine availability of N026A/B.

Identify that RB 50ft Temperature is above 140F, therefore N026A/B are UNAVAILABLE.

**** CRITICAL STEP** SAT/UNSAT***

Step 3 - Using the Fuel Zone Level Instruments section of CAUTION 1, plot the given parameters of Condition 3 to determine availability of N036/37.

Plot and determine that Condition 3 parameters plot in the UNSAFE region of the Reactor Saturation Limit Curve; determine that N036 is AVAILABLE since it is reading above -130 inches, determine that N037 is UNAVAILABLE since it is reading below -130 inches.

**** CRITICAL STEP** SAT/UNSAT***

Step 4 - Using the TAF Determination section of CAUTION 1, plot the given parameters of Condition 4 to determine if reactor water level is above or below TAF.

Plot the parameters of Condition 4 and determine that reactor water level is below TAF

**** CRITICAL STEP** SAT/UNSAT***

Step 5 - Using the LL-4 Determination section of CAUTION 1, plot the given parameters of Condition 5 to determine if reactor water level is above or below LL-4.

Plot the parameters of Condition 5 and determine that reactor water level is above LL-4

**** CRITICAL STEP** SAT/UNSAT***

TERMINATING CUE: When examinee has completed the requested information for each condition, the JPM may be terminated.

*** Comments required for any step evaluated as UNSAT.**

RELATED TASKS:

K/A REFERENCE AND IMPORTANCE RATING:

GEN 2.1.25 3.9/4.2

Ability to interpret reference materials, such as graphs, curves, tables, etc.

REFERENCES:

Unit 2 CAUTION 1

TOOLS AND EQUIPMENT:

None.

ADMINISTRATIVE CATEGORY (from NUREG 1123, Rev 2, Supp. 1.):

Admin – Conduct of Operations

Time Required for Completion: _15_ Minutes (approximate).

APPLICABLE METHOD OF TESTING

Performance: Simulate _X_ Actual ___ Unit: ____

Setting: Control Room ___ Simulator____ (Not applicable to In-Plant JPMs)

Time Critical: Yes ___ No _X_ Time Limit _N/A__

Alternate Path: Yes ___ No _X__

EVALUATION

Trainee:_____ SSN: _____

JPM: Pass _____ Fail _____

Remedial Training Required: Yes _____ No _____

Did Trainee Verify Procedure Current?: Yes _____ No _____

Comments: _____

_____

_____

_____

_____

Comments reviewed with Student

Evaluator Signature: _____ Date:_____

TASK CONDITIONS:

Condition 1

Instrument	Reading	Available/Unavailable
Reactor Water Level (N004A)	153 inches	
Reactor Water Level (N004B)	154 inches	
Reactor Water Level (N004C)	151 inches	
Reactor Pressure	100 psig	
1258-1	340F	
1258-3	360F	
1258-2	330F	
1258-4	350F	

Condition 2

Instrument	Reading	Available/Unavailable
Reactor Water Level (N026A)	5 inches	
Reactor Water Level (N026B)	15 inches	
Reactor Pressure	950 psig	
1258-1	210F	
1258-3	225F	
1258-2	215F	
1258-2	207F	
Reactor Bldg 50ft Temperature	150F	

Condition 3

Instrument	Reading	Available/Unavailable
Reactor Water Level (N036)	-125 inches	
Reactor Water Level (N037)	-135 inches	
Reactor Pressure	300 psig	
1258-1	420F	
1258-3	435F	
1258-2	430F	
1258-4	445F	
Recirc. Pumps	OFF	

Condition 4

Instrument	Reading	Above TAF / Below TAF
Reactor Water Level N036/37	-40 inches	
Reactor Pressure	600 psig	
Reference Leg Area Temperature	220F	
Recirc. Pumps	OFF	

Condition 5

Instrument	Reading	Above LL-4 / Below LL-4
Reactor Water Level N036/37	-65 inches	
Reactor Pressure	800 psig	
Reference Leg Area Temperature	180F	
Recirc. Pumps	OFF	

INITIATING CUE:

Using CAUTION 1 (Unit Two) and the indications provided in:

- Condition 1, determine if level instruments N004A/B/C are available or unavailable for use in determining reactor water level.
- Condition 2, determine if level instruments N026A/B are available or unavailable for use in determining reactor water level.
- Condition 3, determine if level instruments N036/N037 are available or unavailable for use in determining reactor water level.
- Condition 4, determine if reactor water level is currently above or below TAF.
- Condition 5, determine if reactor water level is currently above or below LL-4.

PROGRESS ENERGY CAROLINAS
BRUNSWICK TRAINING SECTION

JOB PERFORMANCE MEASURE
ADMINISTRATIVE

A-2-R

LESSON TITLE: Determination of Drywell Volumetric Average Temperature Per 0PT-16.2

LESSON NUMBER: LOT-OJT-JP-201-D09

REVISION NO: 2

SAFETY CONSIDERATIONS:

None

EVALUATOR NOTES: (Do not read to trainee)

1. This JPM is performed in the simulator.
2. Ensure all simulator computer screens are OFF prior to commencing JPM
3. Reset the simulator to IC-11.
4. Input the following point values into CAC-TR-4426-1A/1B/2A/2B
   - Div 2A (Channel 3) -5823 40.0
   - Div 2A (Channel 4) -5824 185.5
   - Div 1A (Channel 4) -5822 185.5
   - Div 2B (Channel 1) -5802 174.1
   - Div 1B (Channel 2) -5803 168.3
   - Div 2B (Channel 2) -5804 162.6
   - Div 1B (Channel 3) -5805 139.3
   - Div 2B (Channel 3) -5806 136.8
   - Div 1B (Channel 4) -5807 133.5
   - Div 2B (Channel 4) -5808 40.0
   - Div 1B (Channel 5) -5808 124.5
   - Div 1A (Channel 4) -5808 121.6
   - Div 2B (Channel 6) -5808 119.2
   - Div 1A (Channel 5) -5817 88.7
   - Div 1A (Channel 6) -5818 40.0
   - Div 2A (Channel 5) -5819 88.7
   - Div 2A (Channel 6) -5820 88.7
5. If this is the first JPM of the JPM set, read the JPM briefing contained NUREG 1021, Appendix E, or similar to the trainee.
6. The trainee will need a calculator to perform this JPM.
7. The trainee will be given a copy of 0PT-16.2.
8. Task standards (i.e. pass/fail criteria) for each JPM step are *ITALICIZED* below the step.

Read the following to trainee.

TASK CONDITIONS:

1. Drywell air RTDs CAC-TE-1258-8, CAC-TE-1258-18 and CAC-TE-1258-23 are inoperable due to erratic indication.
2. An LCO has been established that requires the performance of 0PT-16.2, Drywell Volumetric Average Temperature, once per 24 hours.
3. The CAC-TY-4426-1 and 2 Microprocessors could not be physically accessed due to work in the back panel area.
4. The Process Computer is not available due to maintenance activities.
5. ERFIS is temporarily off-line.
6. This is the 15th day of the month.
7. You have been granted permission by the Unit SCO to perform this test.

INITIATING CUE:

You have been directed by the Unit SCO to perform 0PT-16.2, Drywell Volumetric Average Temperature.

When the test is complete, determine if the test acceptance criteria has been met.

Report the test results to the examiner.

PERFORMANCE CHECKLIST

NOTE: Sequence is assumed unless denoted in the **Comments**.

Step 1 – Obtain drywell temperature readings for the locations listed in step 7.2.1

Records the following readings:
4426-2A Channel 3 – INOP
4426-2A Channel 4 – 185.5 (+0.1)
4426-1A Channel 4 – 185.5 (+0.1)

SAT/UNSAT*

Step 2 – Add step 7.2.1 recorded temperatures and record in step 7.2.2

185.5 (+0.1) and 185.5 (+0.1) added totaling 371.0 (+0.2) and documented in step 7.2.2

SAT/UNSAT*

Step 3 – Divide total obtained in step 7.2.2 by the number of temperatures used

371.0 (+0.2) divided by 2 equaling 185.5 (±0.1) and documented in step 7.2.3

****CRITICAL STEP**** **SAT/UNSAT***

Step 4 – Obtain drywell temperature readings for the locations listed in step 7.3.1

Records the following readings:
4426-2B Channel 1 – 174.1 (+0.1)
4426-1B Channel 2 – 168.3 (+0.1)
4426-2B Channel 2 – 162.6 (+0.1)

SAT/UNSAT*

Step 5 – Add step 7.3.1 recorded temperatures and record in step 7.3.2

174.1 (+0.1), 168.3 (+0.1) and 162.6 (+0.1) added totaling 505.0 (+0.3) and documented in step 7.3.2

SAT/UNSAT*

Step 6 – Divide total obtained in step 7.3.2 by the number of temperatures used

505.0 (+0.3) divided by 3 equaling 168.3 (±0.1) and documented in step 7.3.3

****CRITICAL STEP**** **SAT/UNSAT***

Step 7 – Obtain drywell temperature readings for the locations listed in step 7.4.1

Records the following readings:
4426-1B Channel 3 – 139.3 (+0.1)
4426-2B Channel 3 – 136.8 (+0.1)
4426-1B Channel 4 – 133.5 (+0.1)
4426-2B Channel 4 – INOP

SAT/UNSAT*

Step 8 – Add step 7.4.1 recorded temperatures and record in step 7.4.2

139.3 (+0.1), 136.8 (+0.1) and 133.5 (+0.1) added totaling 409.6 (+0.3) and documented in step 7.4.2

SAT/UNSAT*

Step 9 – Divide total obtained in step 7.4.2 by the number of temperatures used

409.6 (+0.3) divided by 3 equaling 136.5 (±0.1) and documented in step 7.4.3

****CRITICAL STEP**** **SAT/UNSAT***

Step 10 – Obtain drywell temperature readings for the locations listed in step 7.5.1

Records the following readings:
4426-1B Channel 5 – 124.5 (+0.1)
4426-1A Channel 3 – 121.6 (+0.1)
4426-2B Channel 6 – 119.2 (+0.1)

SAT/UNSAT*

Step 11 – Add step 7.5.1 recorded temperatures and record in step 7.5.2

124.5 (+0.1), 121.6 (+0.1) and 119.2 (+0.1) added totaling 365.3 (+0.3) and documented in step 7.5.2

SAT/UNSAT*

Step 12 – Divide total obtained in step 7.5.2 by the number of temperatures used

365.3 (+0.3) divided by 3 equaling 121.8 (±0.1) and documented in step 7.5.3

****CRITICAL STEP**** **SAT/UNSAT***

Step 13 – Obtain drywell temperature readings for the locations listed in step 7.6.1

Records the following readings:
4426-1A Channel 5 – 88.7 (+0.1)
4426-1A Channel 6 – INOP
4426-2A Channel 5 – 88.7 (+0.1)
4426-2A Channel 6 – 88.7 (+0.1)

SAT/UNSAT*

Step 14 – Add step 7.6.1 recorded temperatures and record in step 7.6.2

88.7 (+0.1), 88.7 (+0.1) and 88.7 (+0.1) added totaling 266.1 (+0.3) and documented in step 7.6.2

SAT/UNSAT*

Step 15 – Divide total obtained in step 7.6.2 by the number of temperatures used
266.1 (+0.3) divided by 3 equaling 88.7 (±0.1) and documented in step 7.6.3

****CRITICAL STEP** SAT/UNSAT***

Step 16 – Transfer average readings documented in steps 7.2.3, 7.3.3, 7.4.3, 7.5.3 and 7.6.3 into step 7.7.1
188.5 (+0.1), 168.3 (+0.1), 136.5 (+0.1), 121.8 (+0.1), and 88.7 (+0.1) transferred into step 7.7.1

SAT/UNSAT*

Step 17 – Multiply each reading in 7.7.1 by the designated factor and document in step 7.7.1
9.3 (+0.1), 15.1 (+0.1), 54.6 (+0.1), 46.3 (+0.1), and 7.1 (+0.1) documented in step 7.7.1

****CRITICAL STEP** SAT/UNSAT***

Step 18 – Add weighted averages in step 7.7.1 and document as TOTAL in step 7.7.1.6
9.3 (+0.1), 15.1 (+0.1), 54.6 (+0.1), 46.3 (+0.1), and 7.1 (+0.1) added totaling 132.5 (±0.5) and documented in step 7.7.1

****CRITICAL STEP** SAT/UNSAT***

PROMPT: If asked the status of computer point C074, report it is unavailable.

Step 19 – Record computer point C074 value in step 7.7.2
Step 7.7.2 marked N/A due to unavailability

SAT/UNSAT*

Step 20 – Perform steps 7.7.3 and 7.7.4
Step 7.7.3 and 7.7.4 marked N/A (not required)

SAT/UNSAT*

Step 21 – Perform step 7.7.5
Cover page information verified complete

SAT/UNSAT*

Step 22 – Determine whether the test is SAT or UNSAT based on the cue sheet instructions
Applicant determines the test is SAT because calculated Drywell Avg Air Temp (132.5 ±0.5) is less than 150F (acceptance criteria)

**** CRITICAL STEP** SAT/UNSAT***

Step 23 – Perform step 7.7.6
Unit SCO notified test is complete

SAT/UNSAT*

TERMINATING CUE: When SCO is informed of test results, this JPM can be terminated.

*** Comments required for any step evaluated as UNSAT.**

LIST OF REFERENCES

RELATED TASKS:

223*206*B1*01

K/A REFERENCE AND IMPORTANCE RATING:

GEN 2.2.12 3.7 / 4.1

Knowledge of Surveillance Procedures

REFERENCES:

0PT-16.2 Drywell Volumetric Average Temperature

TOOLS AND EQUIPMENT:

Calculator

ADMINISTRATIVE CATEGORY (from NUREG 1123, Rev 2. Supplement 1):

Admin – Equipment Control

Time Required for Completion: 20 Minutes (approximate).

APPLICABLE METHOD OF TESTING

Performance: Simulate X Actual ___ Unit: 2

Setting: Control Room ___ Simulator____ (Not applicable to In-Plant JPMs)

Time Critical: Yes ___ No X Time Limit N/A

Alternate Path: Yes ___ No X

EVALUATION

Trainee:_____

JPM: Pass _____ Fail _____

Remedial Training Required: Yes _____ No _____

Did Trainee Verify Procedure as Authorized Copy?: Yes _____ No _____
(Each Student should verify one JPM per evaluation set.)

Comments: _____

_____

_____

_____

_____

Comments reviewed with Student

Evaluator Signature: _____ Date:_____

TASK CONDITIONS:

1. Drywell air RTDs CAC-TE-1258-8, CAC-TE-1258-18 and CAC-TE-1258-23 are inoperable due to erratic indication.
2. An LCO has been established that requires the performance of 0PT-16.2, Drywell Volumetric Average Temperature, once per 24 hours.
3. The CAC-TY-4426-1 and 2 Microprocessors could not be physically accessed due to work in the back panel area.
4. The Process Computer is not available due to maintenance activities.
5. ERFIS is temporarily off-line.
6. This is the 15th day of the month.
7. You have been granted permission by the Unit SCO to perform this test.

INITIATING CUE:

You have been directed by the Unit SCO to perform 0PT-16.2, Drywell Volumetric Average Temperature.

When the test is complete, determine if the test acceptance criteria has been met.

Report the test results to the examiner.

Progress Energy

BRUNSWICK NUCLEAR PLANT

C
Continuous Use

DATE COMPLETED Today
UNIT 2 % PWR 100 GMWE 922
SUPERVISOR J. Doe
REASON FOR TEST (check one or more):
____ Routine surveillance
____ WO # _____
✓ Other (explain) LCO 3.6

FREQUENCY:

Once every 24 hours when at least one SPTMS air RTD is inoperable in each division of SPTMS and the unit is in Mode 1, 2, or 3.

PLANT OPERATING MANUAL

VOLUME X

PERIODIC TEST

UNIT
0

0PT-16.2

DRYWELL VOLUMETRIC AVERAGE TEMPERATURE

REVISION 34

1.0 PURPOSE

1.1 This test is performed to determine the operability of the drywell in conformance with the requirements specified in Technical Specification SR 3.6.1.4.1.

1.2 This test involves averaging air temperatures within the drywell.

2.0 REFERENCES

2.1 Technical Specifications

2.2 FSAR, Section 6.2

2.3 System Description SD-24, Containment Atmosphere Control System

2.4 EER 93-578 (SPTMS Air RTD Divisions/Channels Defined)

2.5 2SP-95-208, Temperature Measurement for SPTMS RTD

2.6 ESR 98-00387, Rev. 0, TS Change to Containment/Drywell Air Temperature Requirements

3.0 PREREQUISITES

None Applicable

4.0 PRECAUTIONS AND LIMITATIONS

None Applicable

5.0 SPECIAL TOOLS AND EQUIPMENT

Calculator

6.0 ACCEPTANCE CRITERIA

This test may be considered satisfactory when the drywell volumetric average temperature is less than or equal to 150°F.

7.0 PROCEDURAL STEPS

Initials

7.1 **OBTAIN** permission from Unit Senior Control Operator (SCO) to perform this test. _____

NOTE: Figure 1 may be used as a worksheet but is **NOT** required to be retained with this PT.

NOTE: All temperatures used in this procedure should be rounded off to the nearest tenth of a degree.

NOTE: Primary containment temperatures may be obtained from the CAC-TY-4426-1(2) microprocessor per OP-24, Operator Interface With The SPTMS Microprocessors, from the recorders in the Control Room, from ERFIS display screens 740 and 745 of the Validation Menu; or as a backup method, the designated process computer points may be used. Microprocessor point values may also be obtained by I&C manually taking temperature measurements of SPTMS RTDs.

NOTE: Technical Specifications requires at least one operable temperature detector in each channel for each location.

7.0 PROCEDURAL STEPS

Initials

7.2 90' Elevation And Above

7.2.1 **OBTAIN** drywell temperature for the locations listed below **AND RECORD** in the spaces provided. _____

Recorder/ERFIS Display	SPTMS	CHAN	PPC
4426-2A Channel 3 _____	(5823) _____	II	N/A
4426-2A Channel 4 _____	(5824) _____	II	N/A
4426-1A Channel 4 _____	(5822) _____	I	N/A

7.2.2 **ADD** the recorded temperatures **AND RECORD** the total in the following space: _____

_____ - Recorder/ERFIS display total
_____ - SPTMS total

7.2.3 **DIVIDE** the total by the number of temperatures used to obtain the average temperature for the 90' elevation and above in the following space: _____

_____ ÷ _____ = _____
total no. of temperatures average

7.0 PROCEDURAL STEPS

Initials

7.3 Between 70' And 80' Elevation

7.3.1 **OBTAIN** drywell temperatures for the locations listed below **AND RECORD** in the spaces provided. _____

Recorder/ERFIS Display	SPTMS	CHAN	PPC
4426-2B Channel 1 _____	(5802)_____	II	W109 _____
4426-1B Channel 2 _____	(5803) _____	I	F148 _____
4426-2B Channel 2 _____	(5804) _____	II	W110 _____

NOTE: Notify BESS duty manager if any temperatures between 70' and 80' elevation exceed 240°F.

7.3.2 **ADD** the recorded temperatures **AND RECORD** the total in the following spaces: _____

_____ - Recorder/ERFIS display total
_____ - SPTMS total
_____ - PPC total

7.3.3 **DIVIDE** the total by the number of temperatures used to obtain the average temperature for the 70' - 80' elevation in the following space: _____

_____ ÷ _____ = _____
total no. of temperatures average

7.0 PROCEDURAL STEPS

Initials

7.4 Between 28' And 45' Elevation

7.4.1 **OBTAIN** drywell temperatures for the locations listed below **AND RECORD** in the spaces provided. _____

Recorder/ERFIS Display	SPTMS	CHAN	PPC
4426-1B Channel 3 _____	(5805)_____	I	F149 _____
4426-2B Channel 3 _____	(5806) _____	II	W085 _____
4426-1B Channel 4 _____	(5807) _____	I	F150 _____
4426-2B Channel 4 _____	(5808) _____	II	W086 _____

7.4.2 **ADD** the recorded temperatures **AND RECORD** the total in the following spaces: _____

_____ - Recorder/ERFIS display total
_____ - SPTMS total
_____ - PPC total

7.4.3 **DIVIDE** the total by the number of temperatures used to obtain the average temperature for the 28' - 45' elevation in the following space: _____

_____ ÷ _____ = _____
total no. of temperatures average

7.5 Between 10' And 23' Elevation

7.5.1 **OBTAIN** drywell temperatures for the locations listed below **AND RECORD** in the spaces provided. _____

Recorder/ERFIS Display	SPTMS	CHAN	PPC
4426-1B Channel 5 _____	(5809) _____	I	F151 _____
4426-1A Channel 3 _____	(5812) _____	I	W105 _____
4426-2B Channel 6 _____	(5813) _____	II	W088 _____

7.0 PROCEDURAL STEPS

Initials

7.5.2 **ADD** the recorded temperatures **AND RECORD** the total in the following spaces: _____

_____ - Recorder/ERFIS display total
_____ - SPTMS total
_____ - PPC total

7.5.3 **DIVIDE** the total by the number of temperatures used to obtain the average temperature for the 10' - 23' elevation in the following space: _____

_____ ÷ _____ = _____
total no. of temperatures average

7.6 Below 5' Elevation

7.6.1 **OBTAIN** primary containment temperatures for the locations listed below **AND RECORD** in the spaces provided. _____

Recorder/ERFIS Display	SPTMS	CHAN	PPC
4426-1A Channel 5 _____	(5817)_____	I	W106 _____
4426-1A Channel 6 _____	(5818) _____	I	W107 _____
4426-2A Channel 5 _____	(5819) _____	II	W115 _____
4426-2A Channel 6 _____	(5820) _____	II	W116 _____

CAUTION

If microprocessor is used to obtain data, failure to restore mode selector switch to the ERFIS (NORMAL) position will cause loss of SPTMS indications on the ERFIS Control Room displays.

7.6.2 **ADD** the recorded temperatures **AND RECORD** the total in the following spaces: _____

_____ - Recorder/ERFIS display total
_____ - SPTMS total
_____ - PPC total

7.0 PROCEDURAL STEPS

Initials

7.6.3 **DIVIDE** the total by the number of temperatures used to obtain the average temperature for the below 5' elevation in the following space: _____

_____ ÷ _____ = _____
total no. of temperatures average

NOTE:	The total in Step 7.7.1.6 is the volumetric average temperature for the drywell. If this temperature is greater than 150°F, actions should be taken as required by Technical Specification SR 3.6.1.4.1.

7.7 Volumetric Average

7.7.1 **DETERMINE** the volumetric average temperature by performing the following calculations: _____

1. Average above 90' elevation _____ x 0.05 =_____
   Step 7.2.3

2. Average 70' - 80' elevation _____ x 0.09 =_____
   Step 7.3.3

3. Average 28' - 45' elevation _____ x 0.40 =_____
   Step 7.4.3

4. Average 10' - 23' elevation _____ x 0.38 =_____
   Step 7.5.3

5. Average below 5' elevation _____ x 0.08 =_____
   Step 7.6.3

6. Total_____
   Steps 7.7.1.1 through 7.7.1.5

7.0 PROCEDURAL STEPS

Initials

NOTE:	Computer point C074 may only be used to satisfy EOP concerns and may **NOT** be used to satisfy Technical Specifications.

7.7.2 **RECORD** computer point C074 value (for information). _____

C074 _____

NOTE:	Performance of Steps 7.7.3 and 7.7.4 is only required once a month (perform on the first day of the month).

7.7.3 **SUBTRACT** the value obtained in Step 7.7.2 from the value obtained in Step 7.7.1.6. _____

_____	-	_____	=	_____
Step 7.7.1.6		Step 7.7.2		Difference

7.7.4 **IF** the absolute value of the difference obtained in Step 7.7.3 is greater than 10°F, **THEN ENSURE** that Unit SCO is informed of the discrepancies in the computer point reading (EOP concern). _____

7.7.5 **ENSURE** required information has been recorded on the cover page. _____

7.7.6 **NOTIFY** Unit SCO when this test is complete or found to be unsatisfactory. _____

ATTACHMENT 1
Page 1 of 1
Certification and Review Form

General Comments and Recommendations _____

_____

_____

	Initials	Name (Print)
Performed by:	_____	_____
	_____	_____
	_____	_____
	_____	_____

Exceptions to satisfactory performance _____

_____

Corrective action required _____

_____

Test procedure has been satisfactorily completed:

Unit SCO: _____ _____
Signature Date

Test procedure has **NOT** been satisfactorily completed:

Unit SCO: _____ _____
Signature Date

Test has been reviewed by:

Shift Superintendent: _____ _____
Signature Date

FIGURE 1
Page 1 of 1
Containment Temperature Worksheet

TIME	_____	_____	_____	_____	_____	_____	_____	
4426-2A (Channel 3)-5823	_____	_____	_____	_____	_____	_____	_____	0.05
4426-2A (Channel 4)-5824	_____	_____	_____	_____	_____	_____	_____	
4426-1A (Channel 4)-5822	_____	_____	_____	_____	_____	_____	_____	
4426-2B (Channel 1)-5802	_____	_____	_____	_____	_____	_____	_____	
4426-1B (Channel 2)-5803	_____	_____	_____	_____	_____	_____	_____	0.09
4426-2B (Channel 2)-5804	_____	_____	_____	_____	_____	_____	_____	
4426-1B (Channel 3)-5805	_____	_____	_____	_____	_____	_____	_____	
4426-2B (Channel 3)-5806	_____	_____	_____	_____	_____	_____	_____	
4426-1B (Channel 4)-5807	_____	_____	_____	_____	_____	_____	_____	0.40
4426-2B (Channel 4)-5808	_____	_____	_____	_____	_____	_____	_____	
4426-1B (Channel 5)-5809	_____	_____	_____	_____	_____	_____	_____	
4426-1A (Channel 3)-5812	_____	_____	_____	_____	_____	_____	_____	0.38
4426-2B (Channel 6)-5813	_____	_____	_____	_____	_____	_____	_____	
4426-1A (Channel 5)-5817	_____	_____	_____	_____	_____	_____	_____	
4426-1A (Channel 6)-5818	_____	_____	_____	_____	_____	_____	_____	0.08
4426-2A (Channel 5)-5819	_____	_____	_____	_____	_____	_____	_____	
4426-2A (Channel 6)-5820	_____	_____	_____	_____	_____	_____	_____	
AVERAGE TEMPERATURE	_____	_____	_____	_____	_____	_____	_____	

REVISION SUMMARY

Revision 34 restores 2CAC-TE-1258-20 (4426-2A [channel 6]-5820) that was temporarily removed IAW EC 63061.

Revision 33 incorporates temporary change EC 63061 which temporarily disables temperature indication 2CAC-TE-1258-20 (4426-2A [channel 6]-5820).

Revision 32- Removes the Unit Specific items and associated notes that were added per Temporary Plant Modification ESR 99-00485. Temperature Sensor 2-CAC-TE-1258-22 has been repaired during the refuel outage. This revision also revises terminology for PassPort Implementation.

Revision 31 - This revision removes the notes that specified equivalencies during implementation of ESRs 97-00125 and 97-00051, and changed points A, B, C, D, E, & F to channel 1, 2, 3, 4, 5, & 6.

PROGRESS ENERGY CAROLINAS
BRUNSWICK TRAINING SECTION

JOB PERFORMANCE MEASURE

ADMINISTRATIVE

A-2-S

LESSON TITLE: Evaluate a Clearance Request - CRD Pump 2A.

LESSON NUMBER: LOT-OJT-JP-201-E01

REVISION NO: 01

SAFETY CONSIDERATIONS:

None

EVALUATOR NOTES: (Do not read to trainee)

1. The applicable prints D-02516 SH1A & 1B, D-02538 SH2, LL-09113 SH32, and Attachments 2 & 4 of OPS-NGGC-1301 **WILL** be provided to the trainee.
2. If this is the first JPM of the JPM set, read the JPM briefing contained NUREG 1021, Appendix E, or similar to the trainee.
3. The attached forms from OPS-NGGC-1301 are intended to provide a guide to the evaluator and are **NOT** to be given to the examinee. Attachments 2 & 4 of OPS-NGGC-1301 should be filled out using actual copies of forms from OPS-NGGC-1301 and given to the examinee.
4. The evaluator should have available copies of valve lineups from 2OP-08 & 21 to support performance of JPM if the examinee asks for them.
5. Task standards (i.e. pass/fail criteria) for each JPM step are *ITALICIZED* below the step.

Read the following to trainee.

TASK CONDITIONS:

1. You are an operator in the Work Control Center. Passport is not available for use.
2. Maintenance has prepared a Clearance Request to place CRD Pump 2A under clearance for scheduled work. CRD Pump 2B will be running.
3. This clearance is to allow maintenance to perform two WOs.
   a. The first WO is to allow maintenance to sample lube oil on CRD Pump 2A motor bearings and speed changer, and to inspect the seal cooling water lines (requires breaking flanges on cooling water lines at the pump).
   b. The second WO is to lift the pump so the pump feet can be honed due to high vibration (requires breaking flanges at the pump).

INITIATING CUE:

The WCC SRO directs you to evaluate the attached Clearance Request Form (Attachment 2 of OPS-NGGC-1301) and proposed Clearance Checklist (Attachment 4 of OPS-NGGC-1301) and determine the adequacy of the clearance boundary, and inform him if the proposed clearance is adequate.

ATTACHMENT 2
Sheet 1 of 1
Clearance Request Form

To be completed by the Requestor. (Please print.)

A. Name Mechanic Supervisor Ext. No. 0000

Work Group Z73 (Mechanical Maintenance) Date: Yesterday

B. (1) Unit # 2

(2) System # 2-C12

(3) Equipment to be cleared 2-C12-C001A, CRD Pump 2A

C. Clearance Specifications

- Fluid Boundary
- System Depressurized and Drained
- Power Supply breaker racked out/off
-
-
-
-

D. Reference drawings and procedures (attach list if necessary)

- D-02516 SH1A & 1B, D-02538 SH2, LL-09113 SH32, 2OP-08, 2OP-21

E. Special requests, precautions, and prerequisites

Need SS Waiver of 2 isolation valve requirement

F. Date/Time Needed Today / ASAP or Event

ATTACHMENT 4
Sheet 1 of 1
Operations Clearance Checklist

Clearance No. Admin JPM

Page 1 of 1

Checklist Type: Hang

INT	NAME (PRINT)	INT	NAME (PRINT)

* Independent Verification Required? YES If NO, N/A the Blocks

Seq	Action	Type	Tag Id	Position	Equipment/Component	Completed. By	Verified By *
1	Hang	CIT	1	INFTAH	RTGB Control Switch 2-C12-CS-Z4A		
2	Hang	Red	2	RACOR	Motor Feeder 2-E3-AI2		
3	Hang	Red	3	CLOLOC	Discharge Valve 2-C12-F014A		
4	Hang	Red	4	CLOLOC	Recirc Valve 2-C12-F015A		
5	Hang	Red	5	CLOLOC	Suction Valve 2-C12-F013A		
6	Hang	Red	6	Closed	Cooling Inlet Valve 2-RCC-V295		
7	Hang	Red	7	Closed	Cooling Outlet Valve 2-RCC-V7		
8	Hang	CIT	8	Closed	Pump Drain Valve 2-C12-V45		
9	Hang	Red	9	Open	Casing Vent Valve 2-C12-F109A		

PERFORMANCE CHECKLIST

NOTE: Steps are listed in a logical order, but may be performed in any order.

Step 1 – May obtain a current revision of OPS-NGGC-1301.
Current Revision of OPS-NGGC-1301 obtained.

SAT/UNSAT*

Step 2 – Evaluates CIT INFTAH Tag for the RTGB Control Switch 2-C12-CS-Z4A.
Determines no deficiencies for the info tag.

SAT/UNSAT*

Step 3 – Evaluates Red RACOR Tag for the Motor Feeder 2-E3-AI2.
Identifies deficiency for the breaker number, which should be 2-E3-AJ2.

**** CRITICAL STEP ** SAT/UNSAT***

Step 4 – Evaluates Red CLOLOC Tag for the Discharge Valve 2-C12-F014A.
Determines no deficiencies for the locked closed tag.

SAT/UNSAT*

Step 5 – Evaluates Red CLOLOC Tag for the Recirc Valve 2-C12-F015A.
Determines no deficiencies for the locked closed tag.

SAT/UNSAT*

Step 6 – Evaluates Red CLOLOC Tag for the Suction Valve 2-C12-F013A.
Determines no deficiencies for the locked closed tag.

SAT/UNSAT*

Step 7 – Evaluates Red Closed Tag for the Cooling Inlet Valve 2-RCC-V295.
Identifies wrong valve listed, Valve should be 2-RCC-V294.

**** CRITICAL STEP ** SAT/UNSAT***

Step 8 – Evaluates Red Closed Tag for the Cooling Outlet Valve 2-RCC-V7.
Identifies wrong valve listed, Valve should be 2-RCC-V8.

**** CRITICAL STEP ** SAT/UNSAT***

Step 9 – Evaluates CIT Closed Tag for the Pump Drain Valve 2-C12-V45.
Determines the tag should be a RED tag and the valve position should be OPEN.

**** CRITICAL STEP ** SAT/UNSAT***

Step 10 – Evaluates Red Open Tag for the Casing Vent Valve 2-C12-F109A.
Determines no deficiencies for the open tag.

SAT/UNSAT*

Step 11 – Identify the positive seal line isolation valve not included in boundary request.
Determine positive seal pressure valve (2-C12-F017) should be added.
(Red Closed Tag sequenced anywhere after the breaker but before the Drain Valve).

**** CRITICAL STEP ** SAT/UNSAT***

Step 12 – Evaluates Sequence of the steps of the clearance.
Determines no deficiencies for the sequence.

SAT/UNSAT*

Step 13 - Inform WCC SRO of results.
WCC SRO informed that the clearance is UNSAT as written for the following reasons:

- *Feed breaker ID#*
- *Incorrect RCC inlet valve listed*
- *Incorrect outlet valve listed*
- *Incorrect drain valve tag type and position*
- *Positive seal pressure valve not listed*

SAT/UNSAT*

TERMINATING CUE: When the clearance request has been evaluated for adequacy of the proposed boundary, this JPM is complete.

Corrected Clearance (DO NOT GIVE TO STUDENTS)

Seq	Action	Type	Tag Id	Position	Equipment/Component	Completed. By	Verified By *
1	Hang	CIT	1	INFTAH	RTGB Control Switch 2-C12-CS-Z4A		
2	Hang	Red	2	RACOR	Motor Feeder 2-E3-AI2 *Motor Feeder 2-E3-AJ2.*		
3	Hang	Red	3	CLOLOC	Discharge Valve 2-C12-F014A		
4	Hang	Red	4	CLOLOC	Recirc Valve 2-C12-F015A		
5	Hang	Red	5	CLOLOC	Suction Valve 2-C12-F013A		
6	Hang	Red	6	Closed	Cooling Inlet Valve 2-RCC-V295 *Cooling Inlet Valve 2-RCC-V294*		
7	Hang	Red	7	Closed	Cooling Outlet Valve 2-RCC-V7 *Cooling Outlet Valve 2-RCC-V8.*		
8	Hang	Red	8	Closed	*Positive seal pressure valve (2-C12-F017)*		
9	Hang	CIT Red	9	Closed Open	Pump Drain Valve 2-C12-V45		
10	Hang	Red	10	Open	Casing Vent Valve 2-C12-F109A		

RELATED TASKS:

299020B301, Develop A Clearance Per OPS-NGGC-1301

K/A REFERENCE AND IMPORTANCE RATING:

Generic 2.2.13 4.1/4.3

Knowledge of tagging and clearance procedures

REFERENCES:

OPS-NGGC-1301

TOOLS AND EQUIPMENT:

Referenced prints and OP lineups.

ADMINISTRATIVE CATEGORY (from NUREG 1123, Rev 2. Supp. 1):

Admin - Equipment Control

Time Required for Completion: _35_ Minutes (approximate).

APPLICABLE METHOD OF TESTING

Performance: Simulate _X_ Actual ___ Unit: _2_

Setting: Control Room _X_ Simulator____ (Not applicable to In-Plant JPMs)

Time Critical: Yes ___ No _X_ Time Limit _N/A_

Alternate Path: Yes ___ No _X_

EVALUATION

Trainee:_____

JPM: Pass _____ Fail _____

Remedial Training Required: Yes _____ No _____

Did Trainee Verify Procedure Revision?: Yes _____ No _____
(Each Student should verify one JPM per evaluation set.)

Comments: _____

_____

_____

_____

_____

_____

_____

_____

Comments reviewed with Student

Evaluator Signature: _____ Date:_____

TASK CONDITIONS:

1) You are an operator in the Work Control Center. Passport is not available for use.

2) Maintenance has prepared a Clearance Request to place CRD Pump 2A under clearance for scheduled work. CRD Pump 2B will be running.

3) This clearance is to allow maintenance to perform two WOs.

   a) The first WO is to allow maintenance to sample lube oil on CRD Pump 2A motor bearings and speed changer, and to inspect the seal cooling water lines (requires breaking flanges on cooling water lines at the pump).

   b) The second WO is to lift the pump so the pump feet can be honed due to high vibration (requires breaking flanges at the pump).

INITIATING CUE:

The WCC SRO directs you to evaluate the attached Clearance Request Form (Attachment 2 of OPS-NGGC-1301) and proposed Clearance Checklist (Attachment 4 of OPS-NGGC-1301) and determine the adequacy of the clearance boundary, and inform him if the proposed clearance is adequate.

ATTACHMENT 2
Sheet 1 of 1
Clearance Request Form

To be completed by the Requestor. (Please print.)

A. Name Mechanic Supervisor Ext. No. 0000

Work Group Z73 (Mechanical Maintenance) Date: Yesterday

B. (1) Unit # 2

(4) System # 2-C12

(5) Equipment to be cleared 2-C12-C001A, CRD Pump 2A

C. Clearance Specifications

- Fluid Boundary
- System Depressurized and Drained
- Power Supply breaker racked out/off
-
-
-
-

D. Reference drawings and procedures (attach list if necessary)

- D-02516 SH1A & 1B, D-02538 SH2, LL-09113 SH32, 2OP-08, 2OP-21

E. Special requests, precautions, and prerequisites

Need SS Waiver of 2 isolation valve requirement

F. Date/Time Needed Today / ASAP or Event

ATTACHMENT 4
Sheet 1 of 1
Operations Clearance Checklist

Clearance No. Admin JPM

Checklist Type: Hang

INT	NAME (PRINT)	INT	NAME (PRINT)

* Independent Verification Required? YES If NO, N/A the Blocks

Seq	Action	Type	Tag Id	Position	Equipment/Component	Completed. By	Verified By *
1	Hang	CIT	1	INFTAH	RTGB Control Switch 2-C12-CS-Z4A		
2	Hang	Red	2	RACOR	Motor Feeder 2-E3-AI2		
3	Hang	Red	3	CLOLOC	Discharge Valve 2-C12-F014A		
4	Hang	Red	4	CLOLOC	Recirc Valve 2-C12-F015A		
5	Hang	Red	5	CLOLOC	Suction Valve 2-C12-F013A		
6	Hang	Red	6	Closed	Cooling Inlet Valve 2-RCC-V295		
7	Hang	Red	7	Closed	Cooling Outlet Valve 2-RCC-V7		
8	Hang	CIT	8	Closed	Pump Drain Valve 2-C12-V45		
9	Hang	Red	9	Open	Casing Vent Valve 2-C12-F109A		

PROGRESS ENERGY CAROLINAS
BRUNSWICK TRAINING SECTION

JOB PERFORMANCE MEASURE
ADMINISTRATIVE

A-3-R/S

LESSON TITLE: Determine Stay Time limitations for performing work in a High Radiation Area

LESSON NUMBER:

REVISION NO: 01

SAFETY CONSIDERATIONS:

None.

EVALUATOR NOTES: (Do not read to trainee)

1. The applicable procedure section **WILL** be provided to the trainee.
2. Task standards (i.e. pass/fail criteria) for each JPM step are *ITALICIZED* below each step.

TASK CONDITIONS:

Two workers will be performing a lube check and coupling alignment on the Unit Two (2) RWCU Pump 2A.

Worker #1 has accumulated 600 mrem this year.

Worker #2 has accumulated 670 mrem this year.

The elevator is out of service

The following times for each worker have been estimated for performance of the job.

1. Traversing Southeast stairwell 20' – 50' Rx Bldg	6 minutes
2. Staging time in access area directly outside the RWCU room	15 minutes
3. Staging time in area directly inside room access door	15 minutes
4. Work time at the "A" RWCU pump	1.5 hours

5. Following completion of the job, an additional 25 mrem per worker will be received during de-staging activities and transit back to the maintenance shop.

INITIATING CUE:

Using the information above and the provided radiological survey using best ALARA practices:

1. Determine the total dose accumulated for both workers. (assume the same task times for both workers)
2. Determine if any Brunswick Administrative dose limitations will be exceeded.

PERFORMANCE CHECKLIST

NOTE: Provide the examinee the attached survey map. Each substep is a CRITICAL STEP.

Step 1 - Determines dose for each worker as follows:

a. *Traversing SE stairwell 20' – 50' Rx Bldg (SE is the lowest dose stairwell)*

(6 min) 0.1 Hr X 5 mr/hr = ***.5 mrem***

Estimate 0.5 mrem dose accumulation ****CRITICAL TASK****

SAT/UNSAT

b. *Staging time in access area directly outside the RWCU room*

(15 min) 0.25 Hr X 20 mr/hr = ***5 mrem***

Estimate 5 mrem dose accumulation. ****CRITICAL TASK****

SAT/UNSAT

c. *Staging time in area directly inside room access door*

(15 min) 0.25 Hr X 80 mr/hr = ***20 mrem***

Estimate 5 mrem dose accumulation. ****CRITICAL TASK****

SAT/UNSAT

d. *Work time at the "A" RWCU pump*

1.5 Hrs X 200 mr/hr = ***300 mrem***

Estimate 300 millirem dose accumulation.

STEP

****CRITICAL ~~TASK~~****
SAT/UNSAT

e. *An additional* ***25*** *mr will be accumulated once the job is done for de-staging activities.*

Total = 0.5 + 5 + 20 + 300 + 25 = 350.5 ***mrem***

325.5

**** CRITICAL STEP****
SAT/UNSAT

Step 2 – Determines that neither worker would exceed the Brunswick administrative limit of 2 REM per calendar year if the estimated dose were accumulated.

Worker #1	600 mr + 350.5 mr	=	950.5 mr (< 2R limit)
Worker #2	670 mr + 350.5 mr	=	1020.5 mr (< 2R limit)

**** CRITICAL STEP****

SAT/UNSAT

TERMINATING CUE: When the total dose for each worker has been determined and the administrative limits addressed, the JPM is complete.

Comments

K/A REFERENCE AND IMPORTANCE RATING:

2.3.7 Ability to comply with radiation work permit requirements during normal and abnormal conditions

REFERENCES:

TOOLS AND EQUIPMENT:

Calculator.

SAFETY FUNCTION (from NUREG 1123):

A.3 Radiation Control

Validation Time: 15 Minutes

APPLICABLE METHOD OF TESTING

Performance: Simulate ___ Actual X Unit: 1

Setting: Control Room ___ Simulator____ (N/A for Admin or In-Plant JPMs)

Time Critical: Yes ___ No X Time Limit N/A

Alternate Path: Yes ___ No X

EVALUATION

JPM: Pass _____ Fail _____

_____

_____

_____

TASK CONDITIONS:

Two workers will be performing a lube check and coupling alignment on the Unit Two (2) RWCU Pump 2A.

Worker #1 has accumulated 600 mrem this year.

Worker #2 has accumulated 670 mrem this year.

The elevator is out of service

The following times for each worker have been estimated for performance of the job.

1. Traversing Southeast stairwell 20' – 50' Rx Bldg — 6 minutes
2. Staging time in access area directly outside the RWCU room — 15 minutes
3. Staging time in area directly inside room access door — 15 minutes
4. Work time at the "A" RWCU pump — 1.5 hours
5. Following completion of the job, an additional 25 mrem per worker will be received during de-staging activities and transit back to the maintenance shop.

INITIATING CUE:

Using the information above and the provided radiological survey using best ALARA practices:

Determine the total dose accumulated for both workers. (assume the same task times for both workers)

Determine if any Brunswick Administrative dose limitations will be exceeded.

BRUNSWICK NUCLEAR PLANT
RADIOLOGICAL SURVEY

SURVEY NO. 08 - 175R

		DOSE RATE		CONTAMINATION	
DATE: Today	TIME: 0800	INST. TYPE	Telefactor	β ☐ α ☐	β ☐ α ☐
SURVEYOR	Bill Jones	SERIAL NO.	T117B	INST/SN	
SIGNATURE	Bill Jones	β FACTOR		EFF.	
REVIEWED	Mike Murray	RX POWER	100	BKGD. CPM	CPM
		H2 SCFM	38		

UNIT 2 BLDG RB EL 50' AREA 2A/B RWCU Pp/HX RWP NO. 11425-08

COMPONENT OR TAG NO. WR/JO

WORK PERFORMED Pump Lube check + coupling alignment

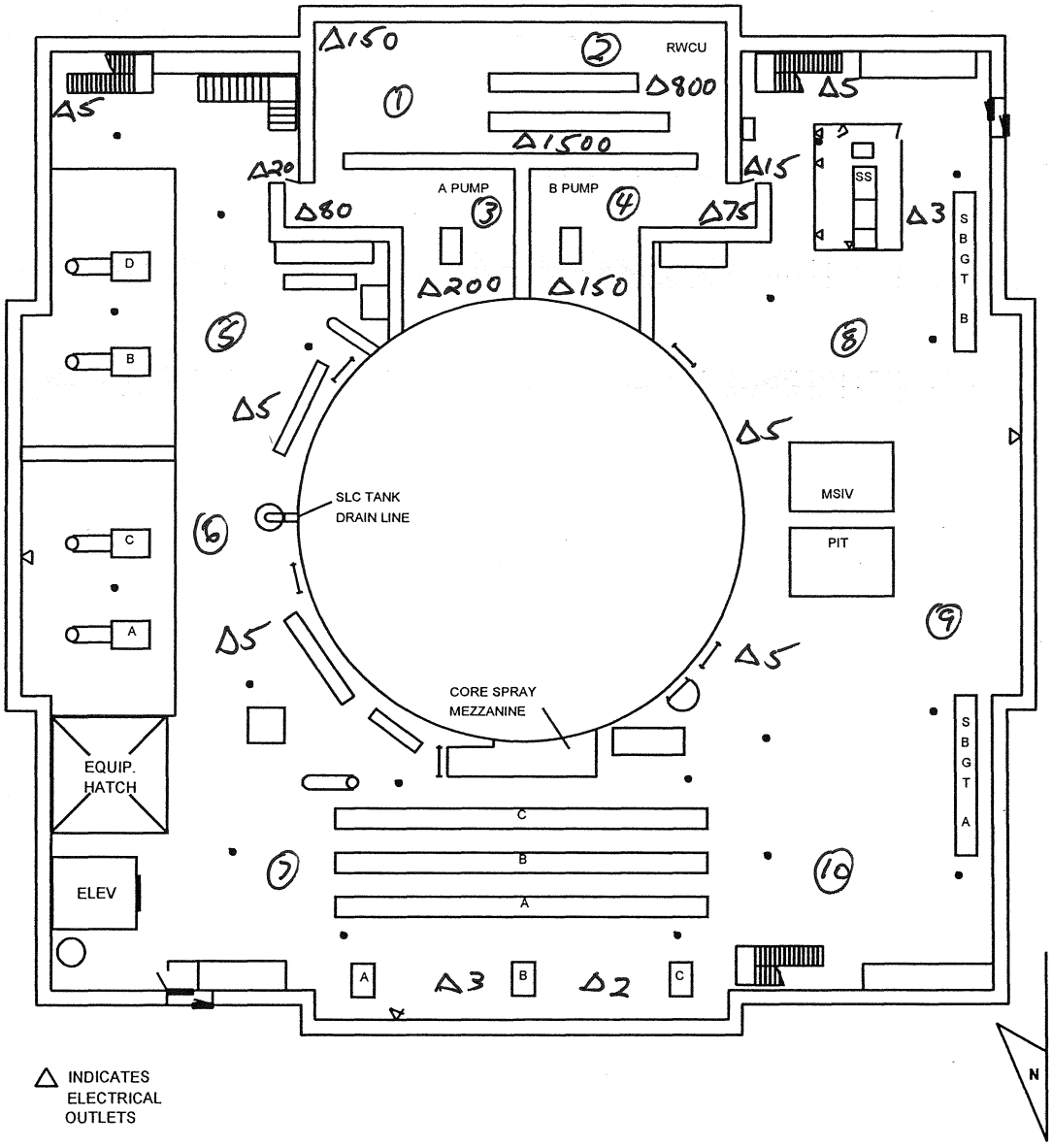

△ INDICATES ELECTRICAL OUTLETS

SMEAR RESULTS IN DPM/100 CM² B=BETA IN mRAD/HR/100CM² M=CPM/MASLIN	
NO.	RESULTS
1	25K
2	50K
3	50K
4	20K
5	<1K
6	<1K
7	<1K
8	<1K
9	<1K
10	<1K

RA -RADIATION AREA
HRA -HIGH RADIATION AREA
LHRA -LOCKED HIGH RADIATION AREA
RCA -RADIATION CONTROL AREA

CA -CONTAMINATION AREA
HCA -HIGH CONTAMINATION AREA
AA -AIRBORNE AREA
—×××— ROPE BOUNDARY

DOSE RATES IN mR/HR
n° -NEUTRON (mRem/Hr)

PROGRESS ENERGY CAROLINAS
BRUNSWICK TRAINING SECTION

JOB PERFORMANCE MEASURE
ADMINISTRATIVE

A-4-S

LESSON TITLE: Classify An Emergency Per PEP-02.1.

LESSON NUMBER: SOT-OJT-JP-301-A15

REVISION NO: 0

SAFETY CONSIDERATIONS:

None.

EVALUATOR NOTES: (Do not read to trainee)

1. The applicable procedure section **WILL** be provided to the trainee.
2. If this is the first JPM of the JPM set, read the JPM briefing contained NUREG 1021, Appendix E, or similar to the trainee.
3. The evaluator may provide the examinee with a copy of PEP-02.1 (including flowchart) if desired.
4. Task standards (i.e. pass/fail criteria) for each JPM step are *ITALICIZED* below the step.

Read the following to trainee.

TASK CONDITIONS:

1. Unit Two was operating at 100% power with DG4 under clearance. SJAE monitors were slowly rising and E&RC was notified to obtain a reactor coolant sample.

2. The following sequence of events occurs (ASSUME all automatic actions that should occur have occurred unless otherwise specified):

Time	Event Description	Exceeded Classification(s)	EAL Number Exeeded	Highest Current Classification and EAL number
1200	E&RC reports results of reactor coolant sample at 5.2 μCi/gm I-131 dose equivalent			
1230	Seismic event occurs and is verified to be at a magnitude of 0.12g on seismic instrumentation			
1245	Off-site power is lost. DG3 fails to start automatically or manually			
1255	DG3 is successfully started and tied to E3			
1305	HPCI steam line break occurs in the HPCI room as indicated by high room temperature and radiation level and high steam line flow. Attempts to isolate the HPCI system are unsuccessful – Assume any E-bus crosstie actions are unsuccessful			
1320	E&RC reports results of reactor coolant sample at 330 μCi/gm I-131 dose equivalent.			

INITIATING CUE:

You are directed to classify the event per PEP-02.1.

For each time listed state the following:

- Exceeded Classification(s)
- Associated EAL number(s)
- Current Highest EAL Classification and associated EAL number(s)

PERFORMANCE CHECKLIST

NOTE: Sequence is assumed unless denoted in the **Comments**.

Step 1 - Obtain a current revision of PEP-02.1.
Current Revision of PEP-02.1 obtained.

SAT/UNSAT*

Step 2 - (Time 1200).
- Determine Exceeded Classification and associated EAL number
  - *Unusual Event - 03.01.01*
- Determine Highest Current Classification and EAL Number(s)
  - *Unusual Event - 03.01.01*

** **CRITICAL STEP** ** **SAT/UNSAT***

Step 3 - (Time 1230).
- Determine Exceeded Classification and associated EAL number
  - *Alert – 14.02.01*
- Determine Highest Current Classification and EAL Number(s)
  - *Alert – 14.02.01*

** **CRITICAL STEP** ** **SAT/UNSAT***

Step 4 - (Time 1245).
- Determine Exceeded Classification and associated EAL number
  - *Alert – 06.02.02*
- Determine Highest Current Classification and EAL Number(s)
  - *Alert – 06.02.02 and 14.02.01*

** **CRITICAL STEP** ** **SAT/UNSAT***

Step 5 – (Time 1255)

- Determine Exceeded Classification and associated EAL number
  - *Unusual Event – 06.01.01*
- Determine Highest Current Classification and EAL Number(s)
  - *Alert – 14.02.01*

**** CRITICAL STEP ** SAT/UNSAT***

Step 6 – (Time 1305)

- Determine Exceeded Classification and associated EAL number
  - *Site Area Emergency – 02.03.01 and 12.03.01*
  - *General (Possible) – 12.04.01 (not a required call at this time)*
- Determine Highest Current Classification and EAL Number(s)
  - *Site Area Emergency – 02.03.01 and 12.03.01*
  - *General (Possible) – 12.04.01 (not a required call at this time)*

**** CRITICAL STEP ** SAT/UNSAT***

Step 7 – (Time 1320)

- Determine Exceeded Classification and associated EAL number
  - *General Emergency – 12.04.01*
  - *Alert – 03.02.01*
- Determine Highest Current Classification and EAL Number(s)
  - *General Emergency – 12.04.01*

**** CRITICAL STEP ** SAT/UNSAT***

TERMINATING CUE: When it is determined a General Emergency should be declared based on Abnormal Core Conditions and Core Damage, this JPM is complete.

*** Comments required for any step evaluated as UNSAT.**

Answer Key

Time	Event Description	Exceeded Classification(s)	EAL Number(s) Exeeded	Highest Current Classification and EAL number(s)
1200	E&RC reports results of reactor coolant sample at 5.2 μCi/gm I-131 dose equivalent	Unusual Event	03.01.01	Unusual Event 03.01.01
1230	Seismic event occurs and is verified to be at a magnitude of 0.12g on seismic instrumentation	Alert	14.02.01	Alert 14.02.01
1245	Off-site power is lost. DG3 fails to start automatically or manually	Alert	06.02.02	Alert 14.02.01 06.02.02
1255	DG3 is successfully started and tied to E3	Unusual Event	06.01.01	Alert 14.02.01
1305	HPCI steam line break occurs in the HPCI room as indicated by high room temperature and radiation level and high steam line flow. Attempts to isolate the HPCI system are unsuccessful – Assume any E-bus crosstie actions are unsuccessful	Site Area Emergency Possible General	02.03.01 12.03.01 12.04.01	Site Area 02.03.01 12.03.01 Possible General 12.04.01
1320	E&RC reports results of reactor coolant sample at 330 μCi/gm I-131 dose equivalent.	General Emergency Alert	12.04.01 03.02.01	General 12.04.01

RELATED TASKS:

Perform actions of Site Emergency Coordinator following declaration of a General Emergency

K/A REFERENCE AND IMPORTANCE RATING:

GEN 2.4.29 3.1/4.4

Knowledge of the Emergency Plan

REFERENCES:

0PEP-02.1, Rev 50

TOOLS AND EQUIPMENT:

None.

ADMINISTRATIVE CATEGORY (from NUREG 1123, Rev 2., Supp.1):

Admin – Emergency Procedures / Plan

Classify An Emergency Per PEP-02.1.

Time Required for Completion: _15_ Minutes (approximate).

APPLICABLE METHOD OF TESTING

Performance: Simulate _X_ Actual ___ Unit: ____

Setting: Control Room ___ Simulator____ (Not applicable to In-Plant JPMs)

Time Critical: Yes ___ No _X_ Time Limit _N/A__

Alternate Path: Yes ___ No _X__

EVALUATION

Trainee:_____ SSN: _____

JPM: Pass _____ Fail _____

Remedial Training Required: Yes _____ No _____

Did Trainee Verify Procedure Current?: Yes _____ No _____

Comments: _____

_____

_____

_____

_____

Comments reviewed with Student

Evaluator Signature: _____ Date:_____

TASK CONDITIONS:

1. Unit Two was operating at 100% power with DG4 under clearance. SJAE monitors were slowly rising and E&RC was notified to obtain a reactor coolant sample.

2. The following sequence of events occurs (ASSUME all automatic actions that should occur have occurred unless otherwise specified):

Time	Event Description	Exceeded Classification(s)	EAL Number Exeeded	Highest Current Classification and EAL number
1200	E&RC reports results of reactor coolant sample at 5.2 μCi/gm I-131 dose equivalent			
1230	Seismic event occurs and is verified to be at a magnitude of 0.12g on seismic instrumentation			
1245	Off-site power is lost. DG3 fails to start automatically or manually			
1255	DG3 is successfully sarted and tied to E3			
1305	HPCI steam line break occurs in the HPCI room as indicated by high room temperature and radiation level and high steam line flow. Attempts to isolate the HPCI system are unsuccessful – Assume any E-bus crosstie actions are unsuccessful			
1320	E&RC reports results of reactor coolant sample at 330 μCi/gm I-131 dose equivalent.			

INITIATING CUE:

You are directed to classify the event per PEP-02.1.

For each time listed state the following:

- Exceeded Classification(s)
- Associated EAL number(s)
- Current Highest EAL Classification and associated EAL number

PROGRESS ENERGY – CAROLINAS
BRUNSWICK TRAINING SECTION

JOB PERFORMANCE MEASURE
IN-PLANT

P-1

LESSON TITLE: Alternate Coolant Injection - EOP-LEP-01 - Coolant Injection with SLC Pumps Aligned To Demineralized Water

LESSON NUMBER: AOT-OJT-JP-300-J10

REVISION NO: 04

SAFETY CONSIDERATIONS:

1. Radiological hazards.
2. Operating equipment hazards.

EVALUATOR NOTES: (Do not read to trainee)

1. The applicable procedure section **WILL** be supplied to the trainee.
2. If this is the first JPM of the JPM set, read the JPM briefing contained in NUREG 1021, Appendix E, or similar to the trainee.
3. The task standard (i.e. pass fail criteria) is italicized.
4. This JPM may be performed on either Unit, as selected by the evaluator.

Read the following to the trainee

TASK CONDITIONS:

1. This JPM will be performed on Unit ____. (Designated by the evaluator)
2. The SLC system and the Demineralized Water system are operable and accessible.
3. Reactor pressure is below the upper range of the SLC pump discharge pressure (0-1380 psig).
4. EOP-01 has directed control operators to enter LEP-01 to restore and/or maintain RPV level above TAF.
5. All control rods are fully inserted.

INITIATING CUE:

You are the Reactor Building AO. You are directed by the Control Operator (with SCO approval) to perform the Auxiliary Operator actions associated with aligning Unit _____ SLC using Demineralized Water per LEP-01, Section 1 and inform the control room when you have completed the actions.

PERFORMANCE CHECKLIST

NOTE: Sequence is assumed unless denoted in the **Comments**.

Step 1 - Determines that EOP-01-LEP-01, Section 1, Step 4 is the starting point and proceed to the Reactor Building 80' elevation.
Procedure is obtained.

SAT/UNSAT*

Start Time: _____

NOTE: All actions are performed locally in the reactor building on the 80'.

PROMPT: If another operator is requested to assist report no other operators are available to help at this time.

Step 2 - Unlock and close SLC storage tank outlet isolation valve, C41-F001.
C41-F001 unlocked and manually closed (Step 4a).

****CRITICAL STEP** SAT/UNSAT***

NOTE: Valve is locked with a locking tab.

Step 3 – Obtain pipe wrench and Demin water to SLC Jumper hose from 80' LEP Toolbox.
Jumper and pipe wrench is obtained.

****CRITICAL STEP** SAT/UNSAT***

NOTE: The student should not remove items from or open the LEP Toolbox, but they should state where the equipment is located.

NOTE: The LEP toolbox key is issued to the reactor building AO at turnover. Alternate method would be to obtain the key from the key locker in the control room.

NOTE: LEP Toolbox is located on the RB 80' elevation next to the South stairs.

Step 4 – Connect one end of the demin water to SLC jumper hose to the threaded connection at the SLC Demineralized Water Supply Isolation Valve, C41-V5000.

Jumper is connected to threaded connection at V5000 (Step 4b).

****CRITICAL STEP** SAT/UNSAT***

NOTE: Picture provided of the SLC Jumper to help with explanation of connections.

NOTE: The examinee should indicate that a pipe cap will have to be removed to install the threaded connection.

Step 5 – Connect the other end of the demin water to SLC jumper hose to the threaded connection upstream of the SLC Test Tank Outlet Demineralized Water Supply Isolation Valve, C41-F014.

Jumper is connected to threaded connection at F014 (Step 4c).

****CRITICAL STEP** SAT/UNSAT***

NOTE: The examinee should indicate that a pipe cap will have to be removed to install the threaded connection.

Step 6 – Open the SLC Demin Water Supply Isolation Valve, C41-V5000.

C41-V5000 manually opened, at 80' Rx Bldg (Step 4d).

****CRITICAL STEP** SAT/UNSAT***

Step 7 - Unlock and open SLC Test Tank Outlet Demineralized Water Supply Isolation Valve, C41-F014.

C41-F014 unlocked and manually opened, at 80' Rx Bldg above SLC test tank. (Step 4e)

****CRITICAL STEP** SAT/UNSAT***

NOTE: Valve is locked with a locking tab.

NOTE: Steps 5a-e of the procedure are N/A (Fire protection water is not being used).

PROMPT: If asked, as the Reactor Operator, report that air sparging of the SLC tank is not in progress. (Step 6)

Step 8 - Contact the control room to start the SLC pumps.

Control room informed that SLC is aligned to demineralized water and that the pumps can be started. (Step 7)

SAT/UNSAT*

TERMINATING CUE: All Auxiliary Operator actions necessary for Alternate Coolant Injection with the SLC system are complete.

TIME STOP:_____

***Comments required for any step evaluated as UNSAT.**

RELATED TASKS:

200 071 B5 04
Perform Alternate Coolant Injection With SLC Pumps Per EOP-LEP-01.

K/A REFERENCE AND IMPORTANCE RATING:

295031 EA1.08 3.8/3.9
Ability to operate alternate injection systems.

REFERENCES:

1. EOP-01-LEP-01, Alternate Coolant Injection, Section 1.

TOOLS AND EQUIPMENT:

1. 1 LEP Toolbox Key
2. Pipe wrench
3. Demineralized water to SLC jumper hose

SAFETY FUNCTION (from NUREG 1123, Rev. 2)

Safety Function 2, Reactor Water Inventory Control

REASON FOR REVISION:

SLC modification is now common to both Units.

Alternate Coolant Injection - EOP-LEP-01
Coolant Injection with SLC Pumps Aligned To Demineralized Water

Validation Time: 12 Minutes (approximate).

APPLICABLE METHOD OF TESTING

Performance:	Simulate	✓	Actual			Unit:	
Setting:	Control Room		Simulator			In-Plant	✓
Time Critical:	Yes		No	✓		Time Limit	N/A
Alternate Path:	Yes		No	✓			

EVALUATION

Trainee:_____

JPM: Pass _____ Fail _____

Remedial Training Required: Yes _____ No _____

Did Trainee Verify Procedure?: Yes _____ No _____
(Each Student should verify one JPM per evaluation set)

Comments:

Comments Reviewed With Trainee

Evaluator Signature: _____ Date:_____

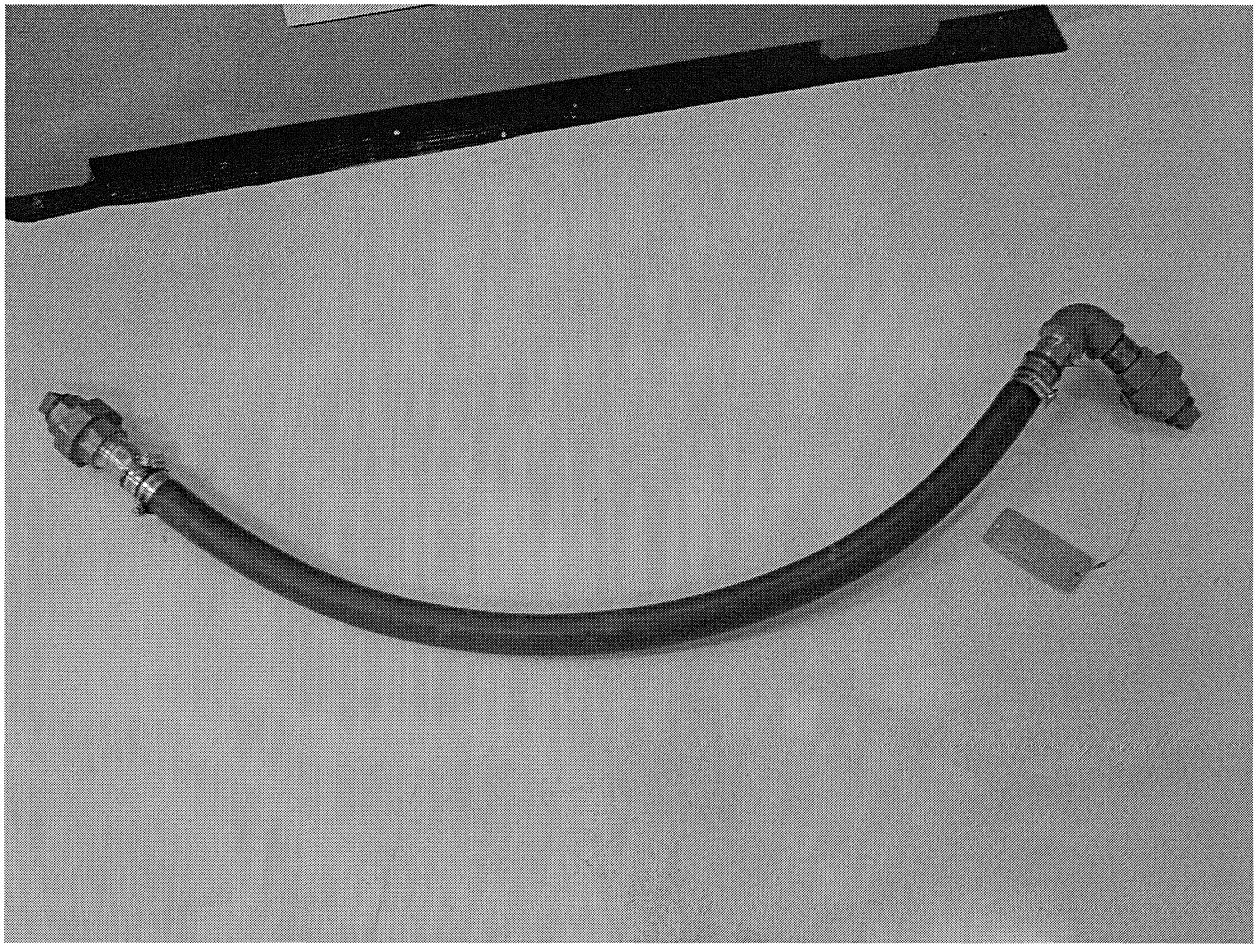

TASK CONDITIONS:

1. This JPM will be performed on Unit ____. (Designated by the evaluator)

2. The SLC system and the Demineralized Water system are operable and accessible.

3. Reactor pressure is below the upper range of the SLC pump discharge pressure (0-1380 psig).

4. EOP-01 has directed control operators to enter LEP-01 to restore and/or maintain RPV level above TAF.

5. All control rods are fully inserted.

INITIATING CUE:

You are the Reactor Building AO. You are directed by the Control Operator (with SCO approval) to perform the Auxiliary Operator actions associated with aligning Unit _____ SLC using Demineralized Water per LEP-01, Section 1 and inform the control room when you have completed the actions.

PROGRESS ENERGY CAROLINAS
BRUNSWICK TRAINING SECTION

JOB PERFORMANCE MEASURE
IN PLANT

P-2A

LESSON TITLE:	STOP AND PREPARE DG4 FOR START PER 0ASSD-02 with failed breaker (DG OPERATOR ACTIONS)
LESSON NUMBER:	AOT-OJT-JP-304-24
REVISION NO:	0

SAFETY CONSIDERATIONS:

1. Hearing protection, hardhat, and safety glasses.
2. Simulate all actions including communications.
3. Practice ALARA at all times while simulating actions.
4. Standard electrical precautions when working around energized electrical equipment.

EVALUATOR NOTES: (Do not read to performer)

1. If this is the first JPM of the JPM set, read the JPM briefing contained in NUREG 1021, Appendix E, or similar to the performer.
2. The task standard (i.e. pass fail criteria) is italicized.
3. **START LOCATION:** Begin this JPM at the DG4 Control Panel H57. Access/Egress is NOT evaluated because this JPM starts at and is performed at the DG4 Control Panel H57.
4. **PROVIDE A COPY:** 0ASSD-02, Section E, is to be provided to the student (marked up to the starting location).
5. **Location of the ASSD Bag**: 23' Elevation (between the cable spread room and the breezeway), opposite wall (South wall) from the elevator to the control room.
6. **TIME CRITICAL – BASIS FOR TIME:** This JPM is a time critical JPM. The critical time is a fraction of the analysis time to establish Suppression Pool Cooling within 1.5 hours. Based on all the other actions that are required to be performed within this time frame, the critical time established for this JPM is 15 minutes.

Read the following to the JPM performer.

TASK CONDITIONS:

1. This is a time critical JPM.
2. A Control Room fire has resulted in Control Room Evacuation.
3. 0ASSD-02 has been entered and is being performed.
4. You are the Diesel Generator Operator.
5. ASSD equipment is distributed and ASSD communications are established.
6. You have your ASSD equipment bag and the following keys:
   Fifteen (15) T112 keys, one (1) CO key, thirty-four (34) GE-75 keys
7. You have completed 0ASSD-02, Section E, up through and including step 1.14.

INITIATING CUE:

You are directed to remove DG4 from service and prepare DG4 for a start per 0ASSD-02, Section E, step 1.15 through step 1.17.

PERFORMANCE CHECKLIST

NOTE: Sequence is assumed unless denoted in the **Comments**.
Comments required for any step evaluated UNSAT.

START TIME: _____

PROMPT:	Provide indications as necessary to the examinee: Initial conditions will show the DG4 output breaker closed; GREEN LIGHT OFF, RED LIGHT ON.

Step 1 – Trip the generator circuit breaker.
Places the Generator Circuit Breaker to open. (Step 1.15.1)

****CRITICAL STEP**SAT/UNSAT***

PROMPT:	After the generator circuit breaker is tripped report DG4 output breaker open; GREEN LIGHT ON, RED LIGHT OFF.

Step 2 – Stop DG4 using the EMERGENCY STOP pushbutton.
Depresses DG4 EMERGENCY STOP pushbutton. (Step 1.15.2)

****CRITICAL STEP**SAT/UNSAT***

PROMPT:	When DG4 EMERGENCY STOP pushbutton is pressed, indicate DG is off by showing UNIT AVAILABLE white light off. Equipment noise goes away.

Step 3 – Place six (6) keylock NORMAL/LOCAL switches in LOCAL.

Inserts key into switch and rotates switch to LOCAL position. (Step 1.15.3)
Accomplished for each of six (6) switches in the same row.
Separate key is used for each switch.

****CRITICAL STEP**SAT/UNSAT***

PROMPT:	When a keylock switch has a GE75 key inserted (simulated) and is rotated to the LOCAL position, indicate the keylock switch in LOCAL. If the key is not simulated to be inserted the keylock switch remains in the NORMAL position (won't move).
NOTE:	A different GE75 key is to be used for each switch. If a switch is placed in LOCAL and the performer indicates they would remove the key to operate the next switch, indicate they are unable to remove the key from the switch while in the LOCAL position.

Step 4 – Place seventh (7th) keylock NORMAL/LOCAL switch in LOCAL, located in the row above the six keylock switches just operated.

Inserts key into switch and rotates switch to LOCAL position. (Step 1.15.4)
Separate key is used for switch.

****CRITICAL STEP**SAT/UNSAT***

NOTE:	There are seven keylock *NORMAL/LOCAL* switches located on Diesel Generator 4 control panel. Six of these are located in a row. The seventh switch is located in the row above the six switches. The six switches in a row must be placed in *LOCAL* before placing the seventh switch in *LOCAL*

Step 5 – Inform Emergency Switchgear Operator DG Bldg that DG4 is removed from service.
Informs Emergency Switchgear Operator DG Bldg that DG4 is removed from service. (Step 1.15.5)

****CRITICAL STEP**SAT/UNSAT***

PROMPT: Role play communications as Emergency Switchgear Operator DG Bldg.

Step 6 – At MCC DGD Compt D59 (Row G3), place NORMAL/LOCAL switch in LOCAL.
At MCC DGD Compt D59: *Inserts key into NORMAL/LOCAL switch and rotates switch to LOCAL position (Step 1.16.1.1)*

****CRITICAL STEP**SAT/UNSAT***

PROMPT: When key inserted (T112) and NORMAL/LOCAL switch is rotated to the LOCAL position, indicate the switch in LOCAL.

Step 7 – At MCC DGD Compt D59 (Row G3), place START/STOP control switch in START for DG CELL 4 EXHAUST FAN 2-VA-H-EF-DG.
At MCC DGD Compt D59: *Rotates START/LOCAL switch to START. (Step 1.16.1.2)*

****CRITICAL STEP**SAT/UNSAT***

PROMPT: When the START/STOP control switch is rotated to START, indicate switch in START. Indicate green light off, red light on.

Step 8 – At MCC DGD Compt EF7 (Row G2), place SW TO JKT WTR CLR SPLY ISOL VLV, 1-SW-V682 in OFF.
At MCC DGD Compt EF7: *Breaker placed in OFF. (Step 1.16.1.3)*

SAT/UNSAT*

PROMPT: When asked inform the examinee the breaker is in OFF.

Step 9 – At 480V Substation E8 trip the following breakers:

Row	Compt	Breaker	Open
B3	AZ6	MCC 2XH	
D2	AO3	MCC 1XK	
E2	AO7	MCC 2XM	
E4	AO9	MCC 2CB	
F3	A12	Emerg. 120/208V AC Distr Pnl 2E8-HG3	

(Step 1.16.2)

****CRITICAL STEP**SAT/UNSAT***

PROMPT: When each breaker is tripped; indicate to the examinee that there is a green open indicating flag on the breaker.

Step 10 - At 480V Substation E8 Compt FN2 (Row A1): Places NORMAL/LOCAL keylock switch to LOCAL.

E8 Compt FN2 (Row A1): *NORMAL/LOCAL switch in LOCAL. (Step 1.16.3.1)*

****CRITICAL STEP**SAT/UNSAT***

PROMPT: When key is inserted and NORMAL/LOCAL switch is rotated to the LOCAL position, indicate the switch in LOCAL.

Step 11 - At 480V Substation E8 Compt AZ5 (Row B2): Verifies E8 480V SUB MAIN BREAKER.

E8 Compt AZ5 (Row B2): *E8 480V SUB MAIN BREAKER open flag verified.*

SAT/UNSAT*

PROMPT: Indicate breaker is OPEN by indicating that there is a green open indicating flag.

NOTE: This starts the alternate path portion of having to close the breaker locally.

Step 12 - At 480V Substation E8 Compt FN2 (Row A1): Places local ASSD control switch to close.

E8 Compt FN2 (Row A1): *local ASSD control switch is closed. (Step 1.16.3.2)*

SAT/UNSAT*

PROMPT: ASSD control switch on Compt. FN2 is placed in close indicate that the breaker green open flag is still evident.

Step 13 - At 480V Substation E8 Compt AZ5 (Row B2): Close the breaker by pulling down the manual close lever.

E8 Compt FN2 (Row B2): *Breaker closed by pulling down on the manual close lever. (Step 1.16.3.3)*

****CRITICAL STEP**SAT/UNSAT***

PROMPT:	Indicate breaker closed after pulling down the manual close lever; red closed indicating flag.

Step 14 - Inform Emergency Switchgear Operator DG Bldg that DG4 is ready to be started.

Emergency Switchgear operator DG Bldg Operator informed DG4 is ready to be started. (Step 1.17)

SAT/UNSAT*

PROMPT:	Role play communications as Emergency Switchgear Operator DG Bldg.

TERMINATING CUE:	When DG4 is ready to be started and the Emergency Switchgear Operator DG Bldg is informed this JPM is complete.

STOP TIME: _____

Time Critical Time – 15 minutes.

RELATED TASKS:

200611B504, Perform actions associated with Alternate Safe Shutdown as the Unit 1(2) DG Operator per 0ASSD-02.

K/A REFERENCE AND IMPORTANCE RATING:

295003 AA1.02 Ability to operate and/or monitor the following as they apply to Partial or Complete Loss of AC Power: Emergency Generators (4.2/4.3)

REFERENCES:

0ASSD-02, Section E.

TOOLS AND EQUIPMENT:

None

SAFETY FUNCTION (from NUREG 1123, Rev 2.):

6 (Electrical)

REASON FOR REVISION:

Modified JPM to add alternate path.
Formatted to have Prompts after steps they apply to

STOP AND PREPARE DG4 FOR START PER 0ASSD-02 with breaker failure

Time Required for Completion: **15 Minutes** (approximate).

Time Taken: ____ Minutes

APPLICABLE METHOD OF TESTING

Performance: Simulate x Actual __ Unit: 2

Setting: Control Room __ Simulator __ (Not applicable to In-Plant JPMs)

Time Critical: Yes x No __ Time Limit **15 Minutes**

Alternate Path: Yes x No __

EVALUATION

Performer:_____

JPM: Pass _____ Fail _____

Remedial Training Required: Yes _____ No _____

Did Performer Verify Procedure? Yes _____ No _____
(Each Student should verify one JPM per evaluation set)

Comments:_____

_____

_____

_____

_____

_____

_____
Comments reviewed with Student

Evaluator Signature: _____ Date:_____

TASK CONDITIONS:

1. This is a time critical JPM.
2. A Control Room fire has resulted in Control Room Evacuation.
3. 0ASSD-02 has been entered and is being performed.
4. You are the Diesel Generator Operator.
5. ASSD equipment is distributed and ASSD communications are established.
6. You have your ASSD equipment bag and the following keys:
   Fifteen (15) T112 keys, one (1) CO key, thirty-four (34) GE-75 keys
7. You have completed 0ASSD-02, Section E, up through and including step 1.14.

INITIATING CUE:

You are directed to remove DG4 from service and prepare DG4 for a start per 0ASSD-02, Section E, step 1.15 through step 1.17.

PROGRESS ENERGY – CAROLINAS
BRUNSWICK TRAINING SECTION

JOB PERFORMANCE MEASURE
IN-PLANT

P-3

LESSON TITLE: Control Room Evacuation IAW AOP-32, Placing the RHR Service Water System in Operation

LESSON NUMBER: LOT-OJT-JP-302-E07

REVISION NO: 04

SAFETY CONSIDERATIONS:

1. Operating equipment and energized electrical equipment hazards.
2. Hearing protection is required in this area when equipment is operating.
3. Safety Glasses, Hard Hat, and approved footwear must be worn while in the area of this JPM.

EVALUATOR NOTES: (Do not read to performer)

1. The applicable procedure section **WILL** be provided to the performer, once it is demonstrated he/she knows the correct procedure.
2. The task standard (i.e. pass fail criteria) is italicized.
3. If this is the first JPM of the JPM set, read the JPM briefing contained in NUREG 1021, Appendix E, or similar to the performer.

Read the following to the JPM performer.

TASK CONDITIONS:

1. The Shift Superintendent has made the determination that Control Room evacuation is required.
2. All immediate actions associated with AOP-32, Plant Shutdown from Outside Control Room, are complete.
3. Remote shutdown equipment has been distributed and communication between the Remote Shutdown Stations is established.
4. All NORMAL/LOCAL switches have been placed in LOCAL in accordance with Attachments 1 through 4, Remote Shutdown Panel Initial Switch Alignment.
5. The RHRSW System is accessible and in standby IAW OP-43.
6. Station 4 (Diesel Building Operator) is available for actions required by this procedure.
7. This JPM will be performed on Unit _____.

INITIATING CUE:

You are directed by the Unit SCO to perform Station 2 (Reactor Building Operator) actions, including Remote Shutdown Panel (Station 1) actions, associated with placing the 'B' Loop RHRSW System in operation per 0AOP-32, Step 3.2.11.2.
Inform the Unit SCO when all required actions have been completed.

PERFORMANCE CHECKLIST

NOTE: Sequence is assumed unless denoted in the **Comments**.

Step 1 – Obtains copy of AOP-32 and determines starting point of Step 3.2.11.2
Obtains copy of AOP-32.

SAT/UNSAT*

TIME START _____

NOTE: Provide MCC Valve light indications commensurate with Performer actions.

Step 2 – OPEN SW-V105, NUCLEAR SERVICE WATER SUPPLY VALVE, at MCC 1(2) XB Compartment DM1, Row H3.
SW-V105 is opened. (Step 2a)

****CRITICAL STEP**SAT/UNSAT***

PROMPT: SW-V105 is normally closed. After placing local control switch to open inform examinee, Green light is off, red light is on.

Step 3 – CLOSE SW-V141, WELL WATER SUPPLY VALVE, at the Remote Shutdown Panel.
SW-V141 is verified closed. (Step 2b)

SAT/UNSAT*

PROMPT: SW-V141 will be closed during the panel lineup. Inform examinee, Green light is on, red light is off.

Step 4 – CLOSE SW-V143, WELL WATER SUPPLY VALVE, at the Remote Shutdown Panel.
SW-V143 is verified closed. (Step 2b)

SAT/UNSAT*

PROMPT: SW-V143 will be closed during the panel lineup. Inform examinee, Green light is on, red light is off.

Step 5 – OPEN or VERIFY OPEN E11-F002B, RHR HEAT EXCHANGER 'B' SERVICE WATER DISCHARGE VALVE, at MCC 1(2) XB Compartment DN9, Row G4.
E11-F002B is verified opened. (Step 2c)

SAT/UNSAT*

PROMPT: E11-F002B is normally open. Inform examinee, Red light is on, green light is off.

Step 6 – Contact Station 4 (Diesel Generator Operator) and direct starting both unit NSW pumps.
Both affected unit NSW pumps are started. (Step 2d)

****CRITICAL STEP**SAT/UNSAT***

PROMPT: Respond as the Station 4 (Diesel Generator Operator), acknowledge the request and then report that both unit NSW Pumps have been started.

Step 7 – Contact the Station 4 (Diesel Generator Operator) and direct starting the 'B' or 'D' RHR Service Water Booster Pump.
The B or D RHR SW Booster Pump is started. (Step 2e)

****CRITICAL STEP**SAT/UNSAT***

PROMPT: Respond as the Station 4 (Diesel Generator Operator), acknowledge the request and then report that either the B or D RHR Service Water Booster Pump has been started.

Step 8 – THROTTLE OPEN E11-F068B, RHR HEAT EXCHANGER 'B' SERVICE WATER DISCHARGE VALVE, at MCC 1(2) XB Compartment DN1, Row K4, until amperage on the running RHR Service Water Booster Pump reaches 80 amps.

E11-F068B is throttled open until pump amperage reaches 80 amps. (Step 2g)

****CRITICAL STEP**SAT/UNSAT***

PROMPT: **ONLY IF DIRECTED**, THEN respond as the Station 4 Operator that you are monitoring RHR Service Water Booster Pump amperage. *(Step 2f)*

PROMPT: Step 8 will require the Performer to throttle open E11-F068B until amperage on the running Service Water Booster Pump reaches 80 amps. As the Station 4 Operator, provide cues of rising pump current as the valve is throttled open. Data from the simulator is that the amps for the pump after it is started should be around 60 amps and raise 1 amp per second the valve is open. The Performer should secure throttling the valve when pump amperage reaches 80 amps.

PROMPT: E11-F068B is normally closed. Initially inform examinee that the Green light is on, Red light is off (as shown). After the valve is throttled, inform examinee that the Green light is on, Red light is on.

Step 9 – OPEN SW-V117, NUCLEAR SERVICE WATER TO VITAL HEADER VALVE, at MCC 1(2) XB Compartment DP2, Row G2.

SW-V117 is opened. (Step 2h)

****CRITICAL STEP**SAT/UNSAT***

PROMPT: SW-V117 is normally closed. After placing local control switch to open, inform examinee Green light is off, red light is on.

Step 10 –Notify the Unit SCO that the RHR Service Water System is in operation.

The Unit SCO is notified.

SAT/UNSAT*

PROMPT: If contacted, report as the Station 3 Operator that the supply of Service Water to running equipment is adequate. *(Step 2i)*

TERMINATING CUE: When the RHR Service Water System is in operation and the Unit SCO is notified, this JPM is complete.

TIME COMPLETED _____

LIST OF REFERENCES

RELATED TASKS:

200604B504

Perform MCC Operator Actions For Placing Suppression Pool Cooling In Service Per ASSD-02 or AOP-32.

K/A REFERENCE AND IMPORTANCE RATING:

295026 EA1.01 4.1/4.1
Ability to operate and/or monitor the following as they apply to Suppression Pool High Water Temperature: Suppression Pool Cooling

REFERENCES:

AOP-32, Plant Shutdown from Outside Control Room - Rev 45

TOOLS AND EQUIPMENT:

Equipment from the Remote Shutdown Equipment Locker.

SAFETY FUNCTION (from NUREG 1123, Rev 2.):

Safety Function 5 – Containment Integrity

REASON FOR REVISION:
Procedure changes.

Validated Time: 20 Minutes (approximate).

APPLICABLE METHOD OF TESTING

Performance: Simulate √ Actual ___ Unit: ____

Setting: Control Room ___ Simulator ___ (Not applicable to In-Plant JPMs)

Time Critical: Yes ___ No √ Time Limit N/A

Alternate Path: Yes ___ No √

EVALUATION

Performer:_____

JPM: Pass _____ Fail _____

Remedial Training Required: Yes _____ No _____

Did Performer Verify Procedure? Yes _____ No _____
(Each Student should verify one JPM per evaluation set)

Comments: _____

Comments reviewed with Student

Evaluator Signature: _____ Date:_____

TASK CONDITIONS:

1. The Shift Superintendent has made the determination that Control Room evacuation is required.
2. All immediate actions associated with AOP-32, Plant Shutdown from Outside Control Room, are complete.
3. Remote shutdown equipment has been distributed and communication between the Remote Shutdown Stations is established.
4. All NORMAL/LOCAL switches have been placed in LOCAL in accordance with Attachments 1 through 4, Remote Shutdown Panel Initial Switch Alignment.
5. The RHRSW System is accessible and in standby IAW OP-43.
6. Station 4 (Diesel Building Operator) is available for actions required by this procedure.
7. This JPM will be performed on Unit _____.

INITIATING CUE:

You are directed by the Unit SCO to perform Station 2 (Reactor Building Operator) actions, including Remote Shutdown Panel (Station 1) actions, associated with placing the 'B' Loop RHRSW System in operation per 0AOP-32, Step 3.2.11.2.
Inform the Unit SCO when all required actions have been completed.

PROGRESS ENERGY – CAROLINAS
BRUNSWICK TRAINING SECTION

JOB PERFORMANCE MEASURE
SIMULATOR

S-1

LESSON TITLE: **Emergency Equalization Around MSIV's - using the Hard Card.**

LESSON NUMBER: **LOT-SIM-JP-025-A01**

REVISION NO: **2**

SIMULATOR SETUP:

Recommended Initial Conditions
IC-11, 100% Power, BOC

Required Plant Conditions
Perform a MANUAL Scram carry out EOP-01-RSP initial operator actions. Close the MSIVs, Trip the SJAEs, RFPs and OPEN the condenser vacuum breakers to reduce vacuum to <10". After this is done place the MSIV control switches to OPEN.

Triggers

Malfunctions

Overrides

Remotes
MS_VMS5005D MVD-V5005 MN STM DRN HDR Isolation Open
MS_IAGP1BYP LO COND VACUUM GP1 TRIP BYP

SAFETY CONSIDERATIONS:

None

EVALUATOR NOTES: (Do not read to performer)

1. The applicable procedure section **WILL NOT** be provided to the performer.
2. If this is the first JPM of the JPM set, read the JPM briefing contained in NUREG 1021, Appendix E, or similar to the performer.

Read the following to the JPM performer.

TASK CONDITIONS:

1. A scram and Group 1 Isolation have occurred.
2. No fuel failure or steam line breaks have occurred.
3. The Main Condenser is available as a heat sink.
4. The Unit SCO has anticipated that Emergency Depressurization may be required.

INITIATING CUE:

You are directed to perform the control operator actions associated with emergency equalization around the MSIVs, and open MSIVs when pressure is $\leq$ 200 psid, using the Hard Card.
You are to inform the Unit SCO when the actions to equalize and open the MSIVs per the Hard Card are complete.

PERFORMANCE CHECKLIST

NOTE: Sequence is assumed unless denoted in the **Comments**.

Step 1 - Obtain "Hard Card" for MSIV equalization.
"Hard Card" obtained for MSIV equalization.

SAT/UNSAT*

TIME START _____

SIM OP:	When requested, place the low condenser vacuum bypass switches to Bypass using Remote Function **MS_IAGP1BYP**

Step 2 – Ensure the condenser vacuum bypass switches in bypass position.
Vacuum bypass switches placed in bypass.

. **SAT/UNSAT***

Step 3 – Place all MSIV control switches in the CLOSE position.
All MSIV control switches, B21-F022A, B, C & D, B21-F028A, B, C & D, placed in CLOSE position.

. **SAT/UNSAT***

Step 4 – Reset Group 1 Isolation.
Group 1 Isolation reset switches, A72-S32 and S33, on P601, are depressed and White lights are ON.

SAT/UNSAT*

Step 5 – Open Outboard MSIVs.
Outboard MSIV control switches, B21-F028A, B21-F028B, B21-F028C, B21-F028D, placed in OPEN and MSIVs are OPEN.

** **CRITICAL STEP** ** **SAT/UNSAT***

Step 6 – Open MS-F020.
Verify MSL Drain Isolation Valve, MS-F020, is open.

SAT/UNSAT*

Step 7 – Open B21-F019.
MSL Outboard Drain Isolation Valve, B21-F019, is open.

** **CRITICAL STEP** ** **SAT/UNSAT***

Step 8 – Close MS-V28.
Steam Supply to MSR's, SJAE's, RFP's, MS-V28, indicates full closed.

** **CRITICAL STEP** ** **SAT/UNSAT***

Step 9 – Close MVD-F021.
Verify Common drain line orifice Bypass Valve to Condenser, MVD-F021, closed.

SAT/UNSAT*

Step 10 – Open B21-F016.
MSL Inboard Drain Isolation Valve, B21-F016, open.

** **CRITICAL STEP** ** **SAT/UNSAT***

Step 11 – Open MS-F038 A, B, C, D.
MSL Orifice Bypass Valve, MS-F038A, B, C, and D, open to increase steam line pressure.

** **CRITICAL STEP** ** **SAT/UNSAT***

Step 12 – Ensure steam line pressure is increasing downstream of Outboard MSIVs.
Steam line pressure rising as indicated on Main Steam Pressure A/B indications on XU-1.

SAT/UNSAT*

Step 13 – Close MS-V46, V47, V48, V49 and V35.
Verify MSL drain valves, MS-V46, MS-V47, MS-V48, & MS-V49 and V35, are closed.

SAT/UNSAT*

Step 14 – When ≤ 200 psid across the valves, open Inboard MSIVs.
Inboard MSIVs B21-F022A, B, C & D are open after ≤ 200 psid.

** **CRITICAL STEP** ** **SAT/UNSAT***

Step 15 – Open MVD-F021.
MVD-F021 indicates open.

SAT/UNSAT*

SIM OP: When directed as the AO, to open MVD-V5005 acknowledge the request.

Step 16 – Direct AO to open MVD-V5005.
MVD-V5005 is open.

SAT/UNSAT*

PROMPT: When the AO is directed to open the MVD-V5005, inform the trainee that another operator will complete the remainder of the hard card actions.

TERMINATING CUE: When the AO has been directed to open the MVD-V5005 and the MSIVs are open the JPM is complete.

Time completed:_____

LIST OF REFERENCES

RELATED TASKS:

239 201 B4 01
Equalize Around And Open Main Steam Isolation Valves Per Hot Startup OP-25.

K/A REFERENCE AND IMPORTANCE RATING:

239001 A4.01 4.2/4.0
Ability to manually operate and or monitor in the Control Room: MSIVs

REFERENCES:

EOP-01-RVCP, Reactor Vessel Control Procedure
Hard Card for Emergency MSIV equalization and reopening (S/1032)

TOOLS AND EQUIPMENT:

None

SAFETY FUNCTION (from NUREG 1123, Rev .2)

4 – Heat Removal from the Reactor Core (Main and Reheat Steam System)

REASON FOR REVISION:

Formatting and comment incorporation

Validation Time: 12 Minutes (approximate).

APPLICABLE METHOD OF TESTING

Performance:	Simulate	___	Actual	X		Unit:	2
Setting:	Control Room	___	Simulator	X		In-Plant:	___
Time Critical:	Yes	___	No	X		Time Limit	___
Alternate Path:	Yes	___	No	X			

EVALUATION

Performer:_____

JPM: Pass _____ Fail _____

Remedial Training Required: Yes _____ No _____

Did Performer Verify Procedure? Yes _____ No _____
(Each Student should verify one JPM per evaluation set)

Comments: _____

_____

_____

_____

_____

_____

_____

_____

Comments reviewed with Student

Evaluator Signature: _____ Date:_____

TASK CONDITIONS:

1. A scram and Group 1 Isolation have occurred.
2. No fuel failure or steam line breaks have occurred.
3. The Main Condenser is available as a heat sink.
4. The Unit SCO has anticipated that Emergency Depressurization may be required.

INITIATING CUE:

You are directed to perform the control operator actions associated with emergency equalization around the MSIVs, and open MSIVs when pressure is $\leq$ 200 psid, using the Hard Card.
You are to inform the Unit SCO when the actions to equalize and open the MSIVs per the Hard Card are complete.

PROGRESS ENERGY CAROLINAS
BRUNSWICK TRAINING SECTION

JOB PERFORMANCE MEASURE
SIMULATOR

S-2

LESSON TITLE: Vent the Drywell per OP-10 w/ Stack Rad Monitor Increase >50%

LESSON NUMBER: LOT-SIM-JP-010-A02

REVISION NO: 3

SIMULATOR SETUP:

A. Initial Conditions:

1. Recommended Initial Conditions

IC 11
Rx. Pwr. 100%
Core Age BOC

2. Required Plant Conditions

Drywell Pressure above 0.5 psig SLOWLY rising or stable, AND below 1.7 psig.

B. Malfunctions

None required

C. Overrides

Meters

Event	Pane l	Tag	Title	Value (ramp rate)	Activate Time (sec)	Deactivate Time (sec)
E1	XU-3	G5B02G15	Main Stack Radiation	13 / 5 min	0 SEC	N/A

Trigger 1 Q6225LGT CAC-V23 Green Lamp = False

D. Special Instructions

Secure Drywell Coolers 2C and 2D Fans 1 and 2 and allow drywell pressure to rise to ≥0.6 psig as indicated on CAC-PI-2685-1 on XU-51, then restart Drywell Coolers 2D Fan 2 and allow Drywell pressure to stabilize. Override Drywell Cooler 2C Fans 1 and 2 and Drywell Cooler 2D Fan 1 control switches OFF.

SAFETY CONSIDERATIONS:

NONE

EVALUATOR NOTES: (Do not read to trainee)

1. The applicable procedure section **WILL** be provided to the trainee, once it is demonstrated he/she knows the correct procedure.

2. If this is the first JPM of the JPM set, read the JPM briefing contained in NUREG 1021, Appendix E, or similar to the trainee.

Read the following to trainee.

TASK CONDITIONS:

1. The Unit is operating at full power.

2. Drywell pressure is above normal due to a partial loss of Drywell Cooling.

3. AOP-14.0 has been entered.

4. Standby Gas Treatment System is in the Standby Alignment.

5. The plant stack radiation monitor is in service and CAC-CS-5519, CAC Purge Vent Isolation Override is in OFF.

6. Temporary suppression chamber to drywell vacuum breaker monitoring is in service.

7. Immediate Drywell venting is required.

INITIATING CUE:

The Unit SCO directs you to vent the Drywell via Standby Gas Treatment, and to inform him when drywell pressure has been reduced below 0.5 psig.

PERFORMANCE CHECKLIST

NOTE: Sequence is assumed unless denoted in the **Comments**.

Step 1 - Obtain current revision of OP-10, Section 8.2.

Current revision of OP-10, Section 8.2 is obtained.

SAT/UNSAT*

Time Started: _____

Step 2 - Record D12-RR-R600B, STACK RAD MONITOR, digital point display.

Value for D12-RR-R600B recorded in OP-10. (Step 8.2.2.1)

SAT/UNSAT*

Step 3 - Add 0.17 to the value to obtain the logarithmic equivalent of a 50% increase in stack radiation monitor reading and record result.

Value recorded in OP-10 of initial reading + 0.17 (1.06 + 0.17 = 1.23)

(Step 8.2.2.2 and 8.2.2.4)

SAT/UNSAT*

NOTE:	The value will be greater than 1 so step 8.2.2.3 can be N/A'd.

Step 4 - Monitor Stack Rad Monitor, D12-RM-R600B, for increase in activity during venting.

D12-RM-R600B periodically monitored. (Step 8.2.2.5).

SAT/UNSAT*

PROMPT:	If asked the condition of the monitoring equipment inform the examinee that all Torus Vacuum breaker green indicating lights are lit. *(Step 8.2.2.6)*
NOTE:	Examinee should note that if radiation increases above the value determined then they need to proceed to step 8.2.2.14., notify E&RC to sample primary containment, and refer to 0E&RC-2020. *(Step 8.2.2.7)*

Step 5 - CLOSE REACTOR BUILDING SBGT TRAIN 2A INLET VALVE, VA-2D-BFV-RB.
VA-2D-BFV-RB indicates fully closed. (Step 8.2.2.8)

**** CRITICAL STEP ** SAT/UNSAT***

Step 6 - CLOSE REACTOR BUILDING SBGT 2B INLET VALVE, VA-2H-BFV-RB.
VA-2H-BFV-RB indicates fully closed. (Step 8.2.2.9)

**** CRITICAL STEP ** SAT/UNSAT***

Step 7 - OPEN SBGT DW SUCT DAMPER, VA-2F-BFV-RB.
VA-2F-BFV-RB, indicates open. (Step 8.2.2.10)

**** CRITICAL STEP ** SAT/UNSAT***

NOTE:	Examinee should recognize that procedure steps 8.2.2.11 and 8.2.2.12 can be N/A'd,. although they may chose to perform the steps anyway.

Step 8 - OPEN *SUPP POOL PURGE EXH VLV, CAC-V172*
CAC-V172 indicates full open. (Step 8.2.2.11a)

NA/SAT/UNSAT*

Step 9 – OPEN *TORUS PURGE EXHAUST VLV, CAC-V22.*
CAC-V22 indicates full open. (Step 8.2.2.11b)

NA/SAT/UNSAT*

PROMPT:	If Examinee chose to perform steps 8.2.2.11 inform the examinee that the required time for venting the suppression chamber has elapsed.

Step 10 – CLOSE *SUPP POOL PURGE EXH VLV, CAC-V172*.
CAC-V172 indicates full closed (Step 8.2.2.12a)

NA/SAT/UNSAT*

Step 11 – Close *TORUS PURGE EXHAUST VLV, CAC-V22*.
CAC-V22 indicates full closed (Step 8.2.2.12b)

NA/SAT/UNSAT*

Step 12 - OPEN DW PURGE EXH VALVE, CAC-V9.
CAC-V9 indicates full open. (Step 8.2.2.13a)

**** CRITICAL STEP ** SAT/UNSAT***

Step 13 - OPEN DW PURGE EXH VALVE, CAC-V23.
CAC-V23 indicates full open. (Step 8.2.2.13b)

**** CRITICAL STEP ** SAT/UNSAT***

SIM OP:	When CAC-V23 is opened, verify Event Trigger E1 initiates to ramp Main Stack Rad Monitor value.
PROMPT:	If requested, inform examinee as Unit SCO that it is desired to vent from the drywell head.

Step 14 - OPEN DW HEAD PURGE EXH VLV, CAC-V49.
CAC-V49 indicates full open. (Step 8.2.2.13c)

SAT/UNSAT*

Step 15 - OPEN DW HEAD PURGE EXH VLV, CAC-V50.

CAC-V50 indicates full open. (Step 8.2.2.13d)

SAT/UNSAT*

NOTE:	This starts the alternate path, recognizing and taking the appropriate actions due to the increase in main stack monitor radiation levels.

Step 16 - Monitor Main Stack Rad Monitor and determine reading has risen by >50%.

Determines Main Stack Rad Monitor reading has risen by >.17 (50%).

**** CRITICAL STEP ** SAT/UNSAT***

NOTE:	It is critical for at least one valve to be closed in each vent path that is open, i.e., CAC-V23 or CAC-V9, **AND**, CAC-V49 or CAC-V50, or that the primary containment suction valve VA-2F-BFV-RB is closed to isolate the release path.
SIM OP:	When the vent path has been isolated, delete the meter override on the Main Stack Rad Monitor.
PROMPT:	If the examinee informs the Unit SCO that the Main Stack has risen by >50%, direct examinee as Unit SCO to perform required actions for the increase.

Step 17 - CLOSE DW PURGE EXH VLV, CAC-V23.

CAC-V23 indicates full closed. (Step 8.2.2.14a)

**** CRITICAL STEP ** SAT/UNSAT***

Step 18 - CLOSE DRYWELL PURGE EXH VALVE, CAC-V9.

CAC-V9 indicates full closed. (Step 8.2.2.14b)

**** CRITICAL STEP ** SAT/UNSAT***

Step 19 - ENSURE DW HEAD PURGE EXH VLV, CAC-V49, IS CLOSED.

CAC-V49 indicates full closed. (Step 8.2.2.14c)

**** CRITICAL STEP ** SAT/UNSAT***

Step 20 - ENSURE DW HEAD PURGE EXH VLV, CAC-V50, IS CLOSED.
CAC-V50 indicates full closed. (Step 8.2.2.14d)

**** CRITICAL STEP ** SAT/UNSAT***

NOTE:	Step 17 is not critical if either step 13 or 14 **AND** either 15 or 16 was completed SAT. Release path may be isolated by closing 1 valve in each vent path OR by closing the common isolation in Step 17.

Step 21 - CLOSE SBGT DW SUCT DAMPER, VA-2F-BFV-RB.
VA-2F-BFV-RB indicates full closed. (Step 8.2.2.15)

**** CRITICAL STEP ** SAT/UNSAT***

NOTE:	The following valves would auto open on SBGT Initiation therefore Steps 18 and 19 are NOT critical.

Step 22 - OPEN SBGT TRAIN 2B REACTOR BUILDING SUCTION VALVE, VA-2H-BFV-RB.
VA-2H-BFV-RB indicates full open. (Step 8.2.2.16)

. **SAT/UNSAT***

Step 23 - OPEN SBGT TRAIN 2A REACTOR BUILDING SUCTION VALVE, VA-2D-BFV-RB.
VA-2D-BFV-RB indicates full open. (Step 8.2.2.17)

. **SAT/UNSAT***

PROMPT:	If asked the condition of the monitoring equipment inform the examinee that all Torus Vacuum breaker green indicating lights are lit.

Step 24 - Confirm all suppression chamber to drywell vacuum breakers are closed.
All Suppression Chamber to Drywell vacuum breakers verified closed. (Step 8.2.2.18)

. **SAT/UNSAT***

PROMPT:	If asked, inform examinee as Unit SCO that E&RC has been notified to sample containment.

Step 25 – Notify E&RC to sample containment.
E&RC notified. . (Step 8.2.2.7b)

. **SAT/UNSAT***

PROMPT:	If asked, inform examinee as Unit SCO that E&RC has been notified to perform E&RC 2020, Noble Gas Instantaneous Release Rate Determination.

Step 26 – Notify E&RC to perform E&RC 2020, Noble Gas Instantaneous Release Rate Determination..
E&RC notified. (Step 8.2.2.7c)

. **SAT/UNSAT***

Step 27 - Inform Unit SCO venting is secured due to increase of 50% in Main Stack Rad Monitor reading.

Unit SCO is informed venting is secured due to increase of 50% in Main Stack Rad Monitor reading.

. **SAT/UNSAT***

TERMINATING CUE:	Primary containment Venting has been isolated due to the high radiation reading and the Unit SCO has been notified then this JPM is complete.

*** Comments required for any step evaluated as UNSAT.**

Time completed: _____

LIST OF REFERENCES

RELATED TASKS:

261 008 B1 01, Perform Normal Primary Containment Venting.

K/A REFERENCE AND IMPORTANCE RATING:

261000 A4.04 3.3/3.4,
Ability to manually operate and monitor Primary Containment Pressure.

REFERENCES:

2OP-10, Sect. 8.2 Rev 65

TOOLS AND EQUIPMENT:

None

SAFETY FUNCTION (from NUREG 1123, Rev 2):

Safety Function 9, Radioactivity Release

REASON FOR REVISION:

Formatting and incorporation of comments

Vent the Drywell per OP-10 w/ Stack Rad Monitor Increase >50%

Time Required for Completion: 12 Minutes (approximate).

APPLICABLE METHOD OF TESTING

Performance: Simulate ___ Actual ✓ Unit: ____

Setting: Control Room ✓ Simulator ✓ (Not applicable to In-Plant JPMs)

Time Critical: Yes ___ No ✓ Time Limit N/A

Alternate Path: Yes ✓ No ____

EVALUATION

Trainee:_____

JPM: Pass _____ Fail _____

Remedial Training Required: Yes _____ No _____

Did Trainee Verify Procedure?: Yes _____ No _____
(Each Student should verify one JPM per evaluation set)

Comments: _____

_____

_____

_____

_____

_____

_____

_____

_____

Comments reviewed with Student

Evaluator Signature: _____ Date:_____

TASK CONDITIONS:

1. The Unit is operating at full power.
2. Drywell pressure is above normal due to a partial loss of Drywell Cooling.
3. AOP-14.0 has been entered.
4. Standby Gas Treatment System is in the Standby Alignment.
5. The plant stack radiation monitor is in service and CAC-CS-5519, CAC Purge Vent Isolation Override is in OFF.
6. Temporary suppression chamber to drywell vacuum breaker monitoring is in service.
7. Immediate Drywell venting is required.

INITIATING CUE:

The Unit SCO directs you to vent the Drywell via Standby Gas Treatment, and to inform him when drywell pressure has been reduced below 0.5 psig.

PROGRESS ENERGY CAROLINAS
BRUNSWICK TRAINING SECTION

JOB PERFORMANCE MEASURE
SIMULATOR

S-3

LESSON TITLE: Recovery From Recirculation Pump Runback - Speed Control Failure

LESSON NUMBER: LOT-SIM-JP-002-A06

REVISION NO: 2

SIMULATOR SETUP

Initial Conditions

1. Recommended Initial Conditions

   IC 13
   Rx. Pwr. 100%
   Core Age MOC

2. Required Plant Conditions

   Recirculation Pumps at Limiter #1 and in the Scram Avoidance Region of 0ENP-24, Thermal Limitations Map. OPRM Trip Enabled annunciator in ALARM.

Malfunctions

Event	System	Tag	Title	Value (ramp rate)	Activate Time (sec)	Deactivate Time (sec)
A	RC	RC024F	Recirc Pump A Runback To Limiter #1	N/A	0 SEC	30 SEC
A	RC	RC025F	Recirc Pump B Runback To Limiter #1	N/A	0 SEC	30 SEC

Overrides

Pots

Event	Pane l	Tag	Title	Value (ramp rate)	Activate Time (sec)	Deactivate Time (sec)
E1*	P603	P2740A1I	Recirc Pump B Speed Control	1/120 SEC	0 SEC	N/A
E2	P603	P2739A1I	Recirc Pump A Speed Control	1/120 SEC	0 SEC	N/A

* Set Trigger E1 Conditional; K2716A = Reset
** Set Trigger E2 Conditional; K2711PS8 = Reset

Special Instructions

Initiate malfunctions and allow plant conditions to stabilize. Verify Operation is in the SCRAM AVOIDANCE REGION.

SAFETY CONSIDERATIONS:

NONE

EVALUATOR NOTES: (Do not read to trainee)

1. The applicable procedure section **WILL** be provided to the trainee. When the trainee has identified the proper procedure and section to be used a working copy of the procedure **WILL** be given to the trainee.

2. If this is the first set of the JPM set, read the JPM briefing contained in NUREG 1021, Appendix E, or similar to the trainee.

3. When the first Recirc Pump is reset the pump speed will increase. The operator should lock the scoop tube per immediate actions of AOP-03.0. If speeds are within 20%, no further action is required, otherwise the Recirculation Pump must be shutdown.

Read the following to the trainee

TASK CONDITIONS:

1. Recirculation Pumps A and B have run back and the cause has been corrected.

2. Another operator is available and will monitor Nuclear Instrumentation.

INITIATING CUE:

You are directed by the Unit SCO to reset the Recirculation Pump runback signals to allow Reactor Recirculation flow to be raised. Inform the Unit SCO when the runback signals have been reset.

PERFORMANCE CHECKLIST

NOTE: Sequence is assumed unless denoted in the **Comments**.

Step 1 - Obtain current revision of OP-02, Section 8.3.

Current revision of OP-02, Section 8.3 obtained and verified if applicable.

SAT/UNSAT*

Time Start: _____

NOTE: The order of the steps is not critical, the trainee may reset the A or B pump first. They may also adjust both potentiometers outputs and then push both reset pushbuttons.

NOTE: The trainee will have to lower the output of the potentiometer until it is lower than the runback signal. They will see the percent speed demand signal lower. This tells them that they have control of the speed below the runback signal and the speed should not increase when the runback signal is reset.

SIM OP: Watch the cameras or panels and when the runback signal is reset on the second pump initiate the trigger to have the pump speed increase.

Step 2 - Adjust potentiometer on Recirc Pump A Speed Control until the percent speed demand signal decreases below the runback limit.

Speed demand of Recirc Pump A is reduced until the speed demand is less than or equal to the runback limit.

**** CRITICAL STEP ** SAT/UNSAT***

Step 3 - Depress the Recirc Runback reset push button for Recirc Pump A.

Runback is reset without uncontrolled rise in pump flow.

**** CRITICAL STEP ** SAT/UNSAT***

Step 4 - Adjust potentiometer on Recirc Pump B Speed Control until the speed demand signal decreases below the runback limit.

Speed demand of Recirc Pump B is reduced until the speed demand is less than or equal to the runback limit.

**** CRITICAL STEP ** SAT/UNSAT***

NOTE: After the reset is depressed for the second Pump the alternate path starts..

Step 5 - Depress the Recirc Runback reset push button for Recirc Pump B.

Runback is reset.

**** CRITICAL STEP ** SAT/UNSAT***

NOTE: The following is an Immediate Operator Action in accordance with AOP-3.0.

Step 6 - Lock the Recirc Pump scoop tube to terminate the uncontrolled rise in pump speed.

Scoop tube for Recirc Pump is locked, pump speed stops rising before violating mismatch criteria.

**** CRITICAL STEP ** SAT/UNSAT***

PROMPT: If informed of speed control failure, as SCO direct operator to determine if pump speeds are within mismatch limits.

NOTE: Allowable limit for speed mismatch with core flow <58 mlb/hr is 7.5 Mlb/hr between jet pump flows. If the trainee quickly locks the scoop tube, pumps will be within the limits.

Step 7 - Determine Recirc Pump speed mismatch.

Recirc Pump speeds are verified to be within allowable limits (≤7.5 Mlbs/hr)

OR

Recirc Pump speeds are verified to be outside of allowable limits

SAT/UNSAT*

Step 8 - Inform Unit SCO of pump speed mismatch.

Unit SCO informed of pump speed mismatch.

SAT/UNSAT*

TERMINATING CUE: When the Recirc Pump Runback has been reset, the scoop tube re-locked due to rising speed, and the Recirc Pump speed mismatch limits determined, then this JPM is complete.

***Comments required for any step evaluated as UNSAT.**

Time Completed: _____

RELATED TASKS:

202015B401

Respond To A Recirc Pump Flow Control Failure Rising Per AOP-03.0.

K/A REFERENCE AND IMPORTANCE RATING:

295014 AA1.02 3.6/3.8.

Ability to operate/monitor Recirc Flow Control System As It Applies To Inadvertent Reactivity Addition.

REFERENCES:

2OP-02, Section 8.3
0AOP-03.0, Positive Reactivity Addition

TOOLS AND EQUIPMENT:

None

SAFETY FUNCTION (from NUREG 1123, Rev. 2)

Safety Function 1, Reactivity Control (Recirculation Flow Control System)

REASON FOR REVISION:

Recovery From Recirculation Pump Runback - Speed control Failure

Time required for Completion: __15__ Minutes (approximate).

APPLICABLE METHOD OF TESTING

Performance: Simulate ___ Actual _X_ Unit: __2__

Setting: Control Room ___ Simulator _X_ (Not applicable to In-Plant JPMs)

Time Critical: Yes ___ No _X_ Time Limit _N/A_

Alternate Path: Yes _X_ No ___

EVALUATION

Trainee:_____

JPM: Pass _____ Fail _____

Remedial Training Required: Yes _____ No _____

Did Trainee Verify Procedure Revision? Yes _____ No _____
(Each Student should verify one JPM per evaluation set.)

Comments: _____

_____

_____

_____

_____

_____

_____

_____

Comments Reviewed With Trainee

Evaluator Signature: _____ Date:_____

TASK CONDITIONS:

1. Recirculation Pumps A and B have run back and the cause has been corrected.

2. Another operator is available and will monitor Nuclear Instrumentation.

INITIATING CUE:

You are directed by the Unit SCO to reset the Recirculation Pump runback signals to allow Reactor Recirculation flow to be raised. Inform the Unit SCO when the runback signals have been reset.

PROGRESS ENERGY - CAROLINAS
BRUNSWICK TRAINING SECTION

JOB PERFORMANCE MEASURE

SIMULATOR

S-4

LESSON TITLE:	HPCI Start in Pressure Control Per The Hard Card - Exhaust Diaphragm Failure.
LESSON NUMBER:	LOT-SIM-JP-019-14
REVISION NO:	0

SIMULATOR SETUP

Recommended Initial Conditions

IC-11 100%, BOC

Event Triggers

E1 - Activates all malfunctions/overrides when prompted by evaluator

Malfunctions

A, ES040F, HPCI Fail To Auto Start
A, ES053F - E41-F002 Fail To Auto Close
A, ES054F - E41-F003 Fail To Auto Close
E1, ES047F - HPCI Stm Brk HPCI Room, 1%, 0 SEC

Overrides

Lamps

E1, P601, Q1112SWL, Auto Isol Sig A White, ON
E1, P601, Q1111SWL, Auto Isol Sig B White, ON

Alarms

E1, P601, ZA135, HPCI Isol Trip Sig A, ON
E1, P601, ZA145, HPCI Isol Trip Sig B , ON
E1, P601, ZA152, HPCI Turb Exh Diaph Press Hi, On

Special Instructions

1. Scram the Reactor and close MSIV's
2. Perform scram immediate actions
3. Ensure RPV level is stable and >LL2

SAFETY CONSIDERATIONS:

None.

EVALUATOR NOTES: (Do not read to trainee)

1. The applicable procedure section **WILL NOT** be provided to the trainee.
2. If this is the first JPM of the JPM set, read the JPM briefing contained NUREG 1021, Appendix E, or similar to the trainee.

Read the following to trainee.

TASK CONDITIONS:

1. The reactor has scrammed due to MSIV closure.
2. RPV water level is stable.
3. HPCI is not required for RPV level control.

INITIATING CUE:

You are directed by the Unit SCO to start HPCI for pressure control to lower pressure to 800 psig per the Hard Card and inform the Unit SCO when the actions are complete.

PERFORMANCE CHECKLIST

NOTE: Sequence is assumed unless denoted in the **Comments**.

Step 1 - Obtain Hard Card for HPCI Injection In EOPs.
Hard Card for HPCI Injection obtained.

SAT/UNSAT*

Time Started:_____

Initial Reactor Pressure: _____

NOTE:	Auto Initiation signal can be verified to be reset by observing the white light is not illuminated or by pushing the reset pushbutton.

Step 2 - Ensure HPCI auto initiation is reset.
HPCI auto initiation is reset.

SAT/UNSAT*

Step 3 - Ensure Auxiliary Oil Pump is not running.
Auxiliary Oil Pump verified not running.

SAT/UNSAT*

Step 4 - Ensure E41-V9 and E41-V8 are closed.
E41-V9 and E41-V8 indicate closed.

SAT/UNSAT*

Step 5 - Open E41-F011.
E41-F011 indicates full open.

** **CRITICAL STEP** ** **SAT/UNSAT***

Step 6 - Open E41-F059.
E41-F059 indicates full open.

**** CRITICAL STEP ** SAT/UNSAT***

Step 7 – Start Vacuum Pump and leave in start
Vacuum Pump is running

SAT/UNSAT*

Step 8 - Open E41-F001.
E41-F001 indicates full open.

**** CRITICAL STEP ** SAT/UNSAT***

Step 9 - Start Auxiliary Oil Pump and Leave in START.
Auxiliary Oil Pump control switch in the START position.

**** CRITICAL STEP ** SAT/UNSAT***

SIM OP:	When directed by the evaluator initiate trigger E1 to activate HPCI malfunction/overrides.

Step 10 – Throttle open E41-F008 to maintain desired reactor pressure.
E41-F008 indicates dual indication.

**** CRITICAL STEP ** SAT/UNSAT***

Final Reactor Pressure: _____

NOTE:	This starts the alternate path portion to diagnose failure and isolate HPCI.

Step 11 - Diagnose indications of a HPCI Exhaust Diaphragm rupture.
Determined the exhaust diaphragm has ruptured.

SAT/UNSAT*

Step 12 - Determine HPCI has failed to auto isolate and manually isolate HPCI by closing E41-F002 and F003.

E41-F002 or E41-F003 indicate full closed.

**** CRITICAL STEP ** SAT/UNSAT***

Step 13 - Inform Unit SCO HPCI is isolated and unavailable for pressure control.

SCO informed HPCI is unavailable for injection.

SAT/UNSAT*

TERMINATING CUE: When HPCI is isolated, this JPM is complete.

*** Comments required for any step evaluated as UNSAT.**

Time completed: _____

RELATED TASKS:

206200B401, Place HPCI in Reactor Pressure control from the standby lineup per OP-19

K/A REFERENCE AND IMPORTANCE RATING:

295025 EA1.04 3.8/3.9
Ability to operate and/or monitor the following as they apply to High Reactor Pressure:
HPCI (plant specific)

REFERENCES:

2OP-19, Section 8.2
Hard Card S/1019, HPCI Pressure Control In EOPs

TOOLS AND EQUIPMENT:

None.

SAFETY FUNCTION (from NUREG 1123, Rev 2.)

3 - Pressure Control (HPCI)

REASON FOR REVISION:

Modified JPM to have exhaust diaphragm failure.

Vailidation Time: 10 Minutes (approximate).

APPLICABLE METHOD OF TESTING

Performance: Simulate ___ Actual ✓ Unit: 2

Setting: Control Room ___ Simulator ✓ (Not applicable to In-Plant JPMs)

Time Critical: Yes ___ No ✓ Time Limit N/A

Alternate Path: Yes ✓ No ____

EVALUATION

Trainee:_____

JPM: Pass _____ Fail _____

Remedial Training Required: Yes _____ No _____

Did Trainee Verify Procedure?: Yes _____ No _____
(Each Student should verify one JPM per evaluation set.)

Comments: _____

Comments reviewed with Student

Evaluator Signature: _____ Date:_____

TASK CONDITIONS:

1. The reactor has scrammed due to MSIV closure.
2. RPV water level is stable.
3. HPCI is not required for RPV level control.

INITIATING CUE:

You are directed by the Unit SCO to start HPCI for pressure control to lower pressure to 800 psig per the Hard Card and inform the Unit SCO when the actions are complete.

PROGRESS ENERGY – CAROLINAS
BRUNSWICK TRAINING SECTION

JOB PERFORMANCE MEASURE
SIMULATOR

S-5

LESSON TITLE: RCIC Start Using the Hard Card – Flow Controller Failure

LESSON NUMBER: LOT-SIM-JP-016-A02

REVISION NO: 3

SIMULATOR SETUP

Recommended Initial Conditions

IC-11

Rx Pwr 100%

BOC

Required Plant Conditions:

RPV level <105 inches"

RFPTs tripped and HPCI not available

Triggers:

1 – RCIC Flow Control Failure

Malfunctions:

Active, ES041F (RCIC Auto Start Fail)

Overrides:

Trigger 1, Switch, P601, K1H12E, RCIC FC Setpoint Decrease, PUSH

Remotes

None

Special Instructions:

Place HPCI Aux Oil Pump in PTL. Trip RFPTs to reduce RPV level below +105 inches.

Complete scram immediate actions. Start SBGT.

When RPV level is <105 inches (LL2), place simulator in Freeze.

SAFETY CONSIDERATIONS:

None

EVALUATOR NOTES: (Do not read to trainee)

1. The applicable procedure section **WILL NOT** be provided to the trainee.
2. If this is the first JPM of the JPM set, read the JPM briefing contained NUREG 1021, Appendix E, or similar to the trainee.

Read the following to trainee.

TASK CONDITIONS:

1. Both Reactor Feed Pumps have tripped.
2. HPCI is not available
3. Reactor Vessel Level has decreased to less than LL2.
4. SBGT is running.
5. RCIC has failed to auto start.

INITIATING CUE:

You are directed to manually start RCIC per the Hard Card, raise RCIC flow to 500 gpm and inform the Unit SCO when actions to start RCIC per the Hard Card are complete.

PERFORMANCE CHECKLIST

NOTE: Sequence is assumed unless denoted in the **Comments**.

Step 1 - Obtain Hard Card RCIC Operations For EOPs.
Hard Card RCIC Operations For EOPs obtained at P601.

SAT/UNSAT*

Time Started:_____

Step 2 - Ensure E51-V8 (valve position), E51-V8 (actuator position), and E51-V9 indicate OPEN.
E51-V8 (valve position), E51-V8 (actuator position), and E51-V9 verified open.

SAT/UNSAT*

Step 3 - OPEN E51-F046.
E51-F046 is full OPEN (cooling water valve).

**** CRITICAL STEP ** SAT/UNSAT***

Step 4 - Start Vacuum Pump and leave switch in START.
Vacuum Pump running with switch in START.

SAT/UNSAT*

Step 5 - OPEN E51-F045.
E51-F045 is full OPEN.

**** CRITICAL STEP ** SAT/UNSAT***

Step 6 – OPEN E51-F013.
E51-F013 is full OPEN.

**** CRITICAL STEP ** SAT/UNSAT***

SIM OP:	Monitor RCIC controller on panel mimics. When injection valve has been opened ensure Trigger 1 activated RCIC controller failure.

Step 7 – Ensure RCIC turbine starts and comes up to speed as directed by RCIC flow control.
RCIC Turbine speed observed to come up to speed.

SAT/UNSAT*

NOTE:	Alarms UA-05, 1-9 (2-9) (FAN CLG UNIT CS PUMP RM A(B) INL PRESS LO) may come in due to an Auto start of RHR Pump Room Cooler A or B without vital service water header in operation. Trainee may ask for these alarms to be silenced, the evaluator may need to ask follow-up questions for the trainee to determine that these alarms may have been associated with the task.

Step 8 – Adjust RCIC flow controller to obtain desired flow rate.
RCIC controller adjusted to achieve flow rate 500 gpm.

**** CRITICAL STEP ** SAT/UNSAT***

NOTE:	Sequence of steps not critical concerning recognizing the flow controller failure and taking manual control.
NOTE:	The flow controller must be placed in Manual to remove the failure. To adjust the flow in Manual the examinee will use the slide bar. It is desirable, but not critical, to maintain the RCIC controller yellow alarm indication off (flow <106%)

NOTE:	This starts the alternate path portion to diagnose failure and take manual control of RCIC.

Step 9 – Recognize failure of RCIC, Flow Controller, E51-FIC-R600, and place E51-FIC-R600, in Manual and raise output to re-establish RCIC flow.
E51-FIC-R600, flow controller, in Manual and output raised to achieve 500 gpm.

**** CRITICAL STEP ** SAT/UNSAT***

Step 10 – Ensure E51-F019 CLOSED with flow >80 gpm.
E51-F019 verified CLOSED.

SAT/UNSAT*

Step 11 – Ensure E51-F025, E51-F026, E51-F004, and E51-F005 are CLOSED.
E51-F025, E51-F026, E51-F004, and E51-F005 verified CLOSED.

SAT/UNSAT*

Step 12 – START SBGT (OP-10)
SBGT fans verified to be running.

SAT/UNSAT*

Step 13 – ENSURE SGT-V8 and SGT-V9.
SGT-V8 and SGT-V9 verified to be OPEN.

SAT/UNSAT*

Step 14 – Ensure barometric condenser condensate pump operates.
Barometric condenser condensate pump operation verified.

SAT/UNSAT*

Step 15 – Inform Unit SCO RCIC is injecting to the RPV with the flow controller in Manual due to failure of automatic flow control.
Unit SCO informed RCIC injecting in Manual with auto flow controller failed.

SAT/UNSAT*

TERMINATING CUE: RCIC is injecting ~500 gpm to the reactor with the Flow Controller in Manual and Hard Card actions complete.

Time Completed:_____

*** Comments required for any step evaluated as UNSAT.**

RELATED TASKS:

217003B101, Manually Startup The RCIC System Per OP-16

K/A REFERENCE AND IMPORTANCE RATING:

295031 EA1.05 4.3/4.3

Ability to operate and/or monitor the following as they apply to Reactor Low Water Level: Reactor Core Isolation System (plant specific)

REFERENCES:

S/969 (RCIC Hard Card)

OP-16, Section 5.3

TOOLS AND EQUIPMENT:

None.

SAFETY FUNCTION (from NUREG 1123, Rev 2.):

2 - Inventory Control

REASON FOR REVISION:

Formatting and comment incorporation

Validation Time: 10 Minutes (approximate).

APPLICABLE METHOD OF TESTING

Performance: Simulate ___ Actual ✓ Unit: 2

Setting: Control Room ___ Simulator ✓ (Not applicable to In-Plant JPMs)

Time Critical: Yes ___ No ✓ Time Limit N/A

Alternate Path: Yes ✓ No ___

EVALUATION

Trainee:_____

JPM: Pass _____ Fail _____

Remedial Training Required: Yes _____ No _____

Did Trainee Verify Procedure Revision?: Yes _____ No _____
(Each Student should verify one JPM per evaluation set.)

Comments _____

Comments reviewed with Student

Evaluator Signature: _____ Date:_____

TASK CONDITIONS:

1. Both Reactor Feed Pumps have tripped.
2. HPCI is not available
3. Reactor Vessel Level has decreased to less than LL2.
4. SBGT is running.
5. RCIC has failed to auto start.

INITIATING CUE:

You are directed to manually start RCIC per the Hard Card, raise RCIC flow to 500 gpm and inform the Unit SCO when actions to start RCIC per the Hard Card are complete.

PROGRESS ENERGY – CAROLINAS
BRUNSWICK TRAINING SECTION

JOB PERFORMANCE MEASURE
SIMULATOR

S-6

LESSON TITLE: Manual Transfer Of E Bus From DG To Normal Feeder.

LESSON NUMBER: LOT-SIM-JP-050-A02

REVISION NO: 2

Recommended Simulator Setup

Initial Conditions

IC-11

Triggers

None

Malfunctions/Overrides

None

Special instructions

1. Start DG3 and tie to E3, pick up E3 load on DG3 and open the master/slave from 2D to E3.
2. Ensure all motors fed from E3 are not running (i.e. CRD, CSW, NSW).
3. Place DG3 in Auto Mode of operation (output breaker will remain closed).
4. Start loads on DG3 to pick up approximately 3200 – 3500 KW. (CRD A, CSW A, NSW A, RHR Loop A in suppression pool cooling)
5. Return DG3 frequency to approximately 60 hertz.

SAFETY CONSIDERATIONS:

None.

EVALUATOR NOTES: (Do not read to examinee)

1. The applicable procedure section **WILL** provided to the examinee after the appropriate procedure section is identified.
2. If this is the first JPM of the JPM set, read the JPM briefing contained NUREG 1021, Appendix E, or similar to the examinee.

Read the following to examinee.

TASK CONDITIONS:

1. Diesel Generator #3 is supplying power to 4160 VAC Bus E3.
2. Bus 2D is energized.
3. The dispatcher has been notified that the E Bus power is being shifted to the normal feeder.

INITIATING CUE:

You are directed by the Unit SCO to perform the actions of 0OP-50.1 for control room manual transfer of Bus E3 from the Diesel Generator to the normal feeder and inform the Unit SCO when actions are complete.

PERFORMANCE CHECKLIST

NOTE: Sequence is assumed unless denoted in the **Comments**.

Step 1 - Obtain a current revision of 0OP-50.1, Section 8.6.
Current Revision of 0OP-50.1, Section 8.6 obtained. Examinee may refer to figure 1

SAT/UNSAT*

Time Started: _____

Step 2 – Reduce diesel generator load or raise diesel generator frequency as necessary to prevent RPS EPA breaker trip.
DG3 frequency is raised (by adjusting the governor in the raise direction).

**** CRITICAL STEP ** SAT/UNSAT***

PROMPT: The SRO determined that swapping of running loads will not be performed.

NOTE: RPS MG Set A EPA breakers will trip on under frequency at 57.5.

Examinee may refer to Figure 1 to determine the value that frequency will need to be raised to. DG frequency cannot be raised above approximately 61 hertz due to the mechanical governor (raising frequency to 61 hertz will prevent EPA breaker trip).

Step 3 – Place DG3 in control room manual.
DG3 is verified to be in control room manual.

**** CRITICAL STEP ** SAT/UNSAT***

Step 4 – Place the synchroscope to ON for Bus 2D to E3
Bus 2D to E3 synchroscope switch is in ON.

**** CRITICAL STEP ** SAT/UNSAT***

Step 5 – Ensure incoming and running voltages are matched.
Incoming and running voltages are matched as indicated on the incoming and running voltmeters on XU-1.

SAT/UNSAT*

NOTE: DG3 is the running source, Bus 2D (the grid) is incoming.

Step 6 – Adjust the DG3 governor control switch as necessary so the synchroscope is rotating slowly in the SLOW direction.
Synchroscope is rotating slowly in the SLOW direction.

SAT/UNSAT*

Step 7 – When the synchroscope is at 12 o'clock position, Then place and hold the control switch for Bus 2D to E3 in CLOSE until both MSTR and SLAVE breakers indicate closed.
Bus 2D to E3 Master and Slave breakers are both closed.

**** CRITICAL STEP ** SAT/UNSAT***

Step 8 – Confirm synchroscope remains at 12 o'clock.
Synchroscope remains at 12 o'clock.

SAT/UNSAT*

Step 9 - Place synchroscope for Bus 2D to E3 in OFF.
Synchroscope for Bus 2D to E3 is in OFF.

SAT/UNSAT*

Step 10 – Lower DG3 load to between 450 and 550 KW by placing the governor switch in LOWER while maintaining generator vars with voltage adjusting rheostat
DG3 load is between 450 and 550 KW.

**** CRITICAL STEP ** SAT/UNSAT***

Step 11 – Open DG3 to E3 output breaker.
DG3 to E3 breaker (AI5) is open.

**** CRITICAL STEP ** SAT/UNSAT***

Step 12 – Observe the following indications:

a. Breaker open in accordance with indicating lights.
Breaker open indication observed.

SAT/UNSAT*

b. Emergency Bus voltage remains constant.
Emergency Bus voltage observed to remain constant.

SAT/UNSAT*

c. Diesel generator load and amps are zero.
DG load and amps observed to be zero.

SAT/UNSAT*

d. NO LOAD and AVAIL lights are illuminated.
No Load and Avail lights observed to be on

SAT/UNSAT*

PROMPT: Inform examinee that another operator has been assigned to shut down DG3 in accordance with OP-39.

Step 13 – Unit SCO informed actions complete to transfer Bus E3 from DG to normal.
SCO informed actions to transfer E3 from DG to normal are complete.

SAT/UNSAT*

TERMINATING CUE: When E3 is being supplied from Bus 2D and DG3 output breaker is open, this JPM is complete.

*** Comments required for any step evaluated as UNSAT.**

Time Completed: _____

RELATED TASKS:

262017B101, Complete A Control Room Manual Transfer Of Emergency Bus Supply From Diesel Generator To Normal Feeder Per OP-50.1

K/A REFERENCE AND IMPORTANCE RATING:

264000 A4.05 3.6/3.7
Ability to manually operate and/or monitor in the control room: Transfer of emergency generator (with load) to grid.

REFERENCES:

0OP-50.1, Section 8.6

TOOLS AND EQUIPMENT:

None.

SAFETY FUNCTION (from NUREG 1123, Rev 2.):

6 - Electrical (Emergency Generators)

REASON FOR REVISION:

Formatting and comment incorporation

Validation Time: 15 Minutes (approximate).

APPLICABLE METHOD OF TESTING

Performance: Simulate ___ Actual ✓ Unit: 2

Setting: Control Room ___ Simulator ✓ (Not applicable to In-Plant JPMs)

Time Critical: Yes ___ No ✓ Time Limit N/A

Alternate Path: Yes ___ No ✓

EVALUATION

Examinee:_____

JPM: Pass _____ Fail _____

Remedial Training Required: Yes _____ No _____

Did Examinee Verify Procedure?: Yes _____ No _____
(Each Student should verify one JPM per evaluation set.)

Comments: _____

Comments reviewed with Student

Evaluator Signature: _____ Date:_____

TASK CONDITIONS:

1. Diesel Generator #3 is supplying power to 4160 VAC Bus E3.

2. Bus 2D is energized.

3. The dispatcher has been notified that the E Bus power is being shifted to the normal feeder.

INITIATING CUE:

You are directed by the Unit SCO to perform the actions of 0OP-50.1 for control room manual transfer of Bus E3 from the Diesel Generator to the normal feeder and inform the Unit SCO when actions are complete.

PROGRESS ENERGY – CAROLINAS
BRUNSWICK TRAINING SECTION

JOB PERFORMANCE MEASURE
SIMULATOR

S-7

LESSON TITLE: Restore Nitrogen Backup System after an Isolation

LESSON NUMBER: LOT-SIM-JP-046-001

REVISION NO: 0

SIMULATOR SETUP

Recommended Initial Conditions

IC-11

Rx Pwr 100%

BOC

Required Plant Conditions:

Triggers:

Malfunctions:

Insert an inadvertent CS initiation and then remove the malfunction.

Overrides:

Remotes

None

Special Instructions:

Verify auto actions occurred for the inadvertent CS initiation signal.

Turn both Core Spray pumps off.

SAFETY CONSIDERATIONS:

None

EVALUATOR NOTES: (Do not read to trainee)

1. The applicable procedure section **WILL NOT** be provided to the trainee. The applicable procedure section can be provided to the student after they have identified the correct procedure that is needed.
2. Do not provide the student with OP-18 until asked for.
3. If this is the first JPM of the JPM set, read the JPM briefing contained NUREG 1021, Appendix E, or similar to the trainee.

Read the following to trainee.

TASK CONDITIONS:

1. Core Spray instrumentation was bumped causing an inadvertent initiation signal.
2. Auto actions have been verified.
3. Core Spray Pumps have been secured.
4. Prerequisites of 0OP-46 are all met.

INITIATING CUE:

You are directed to Restore the Nitrogen Backup System in accordance with 0OP-46. Inform the Unit SCO when the Nitrogen Backup System is restored to normal.

PERFORMANCE CHECKLIST

NOTE: Sequence is assumed unless denoted in the **Comments**.

Step 1 – Obtain copy of 0OP-46 Section 8.10 to restore Nitrogen Backup System to normal.
Section 8.10 of 0OP-46 is obtained.

SAT/UNSAT*

TIME START: _____

NOTE:	Examinee may determine to use OP-18 Section 7, Core Spray Shutdown or may use operator knowledge to reset the Core Spray Logic. If student requests a copy of OP-18 to reset the Core Spray Logic, provide them with the OP-18, Section 7. If using OP-18, examinee should determine that the only steps in the Core Spray Shutdown procedure that have to be completed are the steps to reset the logic. (Step 7.1.5). Examinee may sign off these steps as Condition Met (CM) or perform them. These steps are not critical. 1. Verify the initiation signal is not valid. 2. Verify Inboard Injection Valve, E21-F005A/B, are closed. 3. Verify Min Flow Bypass Valve, E21-F031A/B, are open. 4. Verify Core Spray Pumps are secured.

Step 2 – Verifies Initial conditions of 0OP-46 Section 8.10.
Initial conditions are verified.

SAT/UNSAT*

NOTE:	The only critical step is to reset the Core Spray Initiation, since LPCI does not have an initiation signal at this time. The 10 second time limit does not apply under these conditions.

Step 3 –Perform the following two steps within 10 seconds of each other:

a. Depress both Initiation Signal/Reset pushbuttons, E21-CS-15A and E21-CS-15B and verify both white Initiation Signal Sealed-In lights go out
Depresses pushbuttons and verifies white initiation lights are not lit. (OP-46 step 8.10.2.1 or OP-18 step 7.1.5)

**** CRITICAL STEP ** SAT/UNSAT***

b. Depress both Loop A and B LPCI Injection Signal/Reset pushbuttons, E11-CS-S26A and E11-CS-S26B, and verify both white Initiation Signal Sealed-In lights are out
Verifies white initiation lights are not lit.

SAT/UNSAT*

PROMPT:	If the examinee performed OP-18, then inform the examinee that another operator will perform step 7.1.6 of 2OP-18 to return Core Spray to Standby.
NOTE:	The following steps are contained in OP-46.

Step 4 – Verifies instrument air header pressure (IA-PI-724-1) is greater than 98 psig.
Verifies air header pressure is normal. (Step 8.10.2.2)

SAT/UNSAT*

Step 5 –Verifies that the following alarms are clear:
Alarms are clear. (Step 8.10.2.3)

Alarm	SAT	UNSAT
UA-01 1-1 RB Instr Air Receiver 2A Press Low		
UA-01 1-2 RB Instr Air Receiver 2B Press Low		

SAT/UNSAT*

Step 6 – Momentarily place Div I Non-Intrpt RNA, RNA-SV-5262, control switch to the Override/Reset position, then to OPEN.
Control switch placed to override/reset then back to open. (Step 8.10.2.4)

**** CRITICAL STEP ** SAT/UNSAT***

Step 7 – Ensures the following valve positions:
Valves in their appropriate position. (Step 8.10.2.4a/b)

Valve	Position	SAT	UNSAT
Div I Non-Intrpt RNA, RNA-SV-5262	open		
Div I Backup N2 Rack Isol Vlv, RNA-SV-5482	closed		

SAT/UNSAT*

Step 8 – Momentarily place Div II Non-Intrpt RNA, RNA-SV-5261, control switch to the Override/Reset position, then to OPEN.
Control switch placed to override/reset then back to open. (Step 8.10.2.5)

**** CRITICAL STEP ** SAT/UNSAT***

Step 9 – Ensures the following valve positions:
Valves in their appropriate position. (Step 8.10.2.5a/b)

Valve	Position	SAT	UNSAT
Div II Non-Intrpt RNA, RNA-SV-5261	open		
Div II Backup N2 Rack Isol Vlv, RNA-SV-5481	closed		

SAT/UNSAT*

PROMPT: Inform the examinee that another operator will perform Attachment 11.

Step 10 – Inform Unit SCO that Core Spray has been shutdown and Nitrogen Backup System is in normal alignment.
Unit SCO informed.

SAT/UNSAT*

TERMINATING CUE: When the Nitrogen Backup System has been placed back into normal alignment this JPM is complete.

*** Comments required for any step evaluated as UNSAT.**

Time completed: _____

RELATED TASKS:

278203B101, Restore the Backup Nitrogen System following an Auto Initiation Per OP-46.

K/A REFERENCE AND IMPORTANCE RATING:

232002 A4.03 3.6/3.5

Ability to manually operate and/or monitor in the control room: Reset system isolations.

REFERENCES:

OP-46, Section 8.10

Op-18, Section 7.

TOOLS AND EQUIPMENT:

None.

SAFETY FUNCTION (from NUREG 1123, Rev 2.):

5 – Containment Integrity

REASON FOR REVISION:

New JPM.

Validation Time: 14 Minutes (approximate).

APPLICABLE METHOD OF TESTING

Performance: Simulate ___ Actual ✓ Unit: 2

Setting: Control Room ___ Simulator ✓ (Not applicable to In-Plant JPMs)

Time Critical: Yes ___ No ✓ Time Limit N/A

Alternate Path: Yes ___ No ✓

EVALUATION

Trainee:_____

JPM: Pass _____ Fail _____

Remedial Training Required: Yes _____ No _____

Did Trainee Verify Procedure Revision?: Yes _____ No _____
(Each Student should verify one JPM per evaluation set.)

Comments _____

Comments reviewed with Student

Evaluator Signature: _____ Date:_____

TASK CONDITIONS:

1. Core Spray instrumentation was bumped causing an inadvertent initiation signal.
2. Auto actions have been verified.
3. Core Spray Pumps have been secured.
4. Prerequisites of 0OP-46 are all met.

INITIATING CUE:

You are directed to Restore the Nitrogen Backup System in accordance with 0OP-46. Inform the Unit SCO when the Nitrogen Backup System is restored to normal.

PROGRESS ENERGY CAROLINAS
BRUNSWICK TRAINING SECTION

JOB PERFORMANCE MEASURE
SIMULATOR

S-8

LESSON TITLE: Bypass a Control Rod from the RWM Sequence

LESSON NUMBER: LOT-SIM-JP-007-A01

REVISION NO: 2

SIMULATOR SETUP

IC-32 (suggested)

Triggers

None

Malfunctions

None

Overrides

None

Remote

None

Special Instructions

Ensure rod 30-07 is full in.

Control Rod 30-07 will have to be unbypassed in the RWM ***PRIOR TO*** subsequent JPM administration.

Verify key is not in the RWM.

Resetting the simulator to the established IC for the JPM setup ***DOES NOT*** clear the bypassed rod in the RWM.

SAFETY CONSIDERATIONS:

None.

EVALUATOR NOTES: (Do not read to trainee)

1. The applicable procedure section **WILL** be provided to the trainee after finding the appropriate section of the procedrue.

2. If this is the first JPM of the JPM set, read the JPM briefing contained NUREG 1021, Appendix E, or similar to the trainee.

Read the following to trainee.

TASK CONDITIONS:

1. Control Rod 30-07 has been fully inserted to suppress a fuel leak.

2. Control Rod 30-07 has not been bypassed in the Rod Worth Minimizer.

3. The RWM does not have a critical self test failure.

4. 2OP-07, Section 4.0 Prerequisites are met.

5. The Reactor Engineer has been notified and Technical Specifications have been reviewed.

INITIATING CUE:

The Unit SCO directs you to bypass Control Rod 30-07 in the Rod Worth Minimizer and inform him when the rod has been bypassed.

PERFORMANCE CHECKLIST

NOTE: Sequence is assumed unless denoted in the **Comments**.

Step 1 - Obtain a copy of 2OP-07, Section 8.13.
Current Revision of 2OP-07, Section 8.13 obtained.

SAT/UNSAT*

Time Start:_____

NOTE: The key cabinet has the appropriate key (#37) which can be identified by using the list of keys in the key cabinet.

Step 2 – Obtain key to RWM Computer Display (P607 – Key #37).
Key for RWM Computer display obtained.

SAT/UNSAT*

NOTE: When placed in INOP the following alarm will annunciate - *ROD BLOCK RWM/RMCS SYS TROUBLE* (A-05 5-2).
SIM OP: Silence the Annunciators while the examinee is in the back panels.

Step 3 – Place RWM Computer Display keylock switch in the INOP position.
RWM Computer Display keylock switch is in INOP.

**** CRITICAL STEP ** SAT/UNSAT***

Step 4 – Press the ETC softkey until Rod Bypass Options appears.
Rod Bypass Options is displayed.

SAT/UNSAT*

Step 5 – Press the Rod Bypass Options softkey.
Rod Bypass Options softkey is pressed.

**** CRITICAL STEP ** SAT/UNSAT***

Step 6 – Use Up/Down cursor to ensure correct ID of rod to bypass.
Rod 30-07 identified for bypassing.

**** CRITICAL STEP ** SAT/UNSAT***

Step 7 – Press Bypass Rod softkey
Bypass Rod softkey is pressed.

**** CRITICAL STEP ** SAT/UNSAT***

Step 8 – Confirm the selected rod is added to the display of bypassed rods
Bypassed Rod is displayed.

SAT/UNSAT*

PROMPT: If requested inform examinee that the independent verification for step 8.13.2.1g is complete.

Step 9 – Place RWM Computer Display to OPER (Operate).
RWM Computer Display is in OPER

**** CRITICAL STEP ** SAT/UNSAT***

PROMPT: If requested inform examinee that the independent verification for step 8.13.2.1h is complete.

Step 10 – Press the Display Off softkey to extinguish the screen.
Display Off pressed.

SAT/UNSAT*

Step 11 – Ensure annunciator Rod Block RWM/RMCS Sys Trouble (A-05 5-2) is clear.
Rod Block RWM/RMCS Sys Trouble alarm verified clear.

SAT/UNSAT*

PROMPT: Inform examinee as Unit SCO that you will contact the Reactor Engineer.

PROMPT: Inform examinee that another operator will ensure a Caution Tag is generated identifying the bypassed control rod(s) in the RWM and posted at the RWM ODA (P603) and computer display (P607).

Step 12 – Inform the Unit SCO that Control Rod 30-07 is bypassed
Unit SCO informed Rod 30-07 is bypassed.

SAT/UNSAT*

TERMINATING CUE: When control rod 30-07 is bypassed in the RWM and the Unit SCO informed, this JPM is complete.

Time completed:_____

*** Comments required for any step evaluated as UNSAT.**

RELATED TASKS:

214201B401 Bypass/unbypass a control rod from the Rod Worth Minimizer Computer Display

K/A REFERENCE AND IMPORTANCE RATING:

201006 A2.05 3.1/3.5
Ability to use procedures to correct or control out of sequence rod movement.

REFERENCES:

2OP-07 Rev. 87

TOOLS AND EQUIPMENT:

Key for RWM Computer Display.

SAFETY FUNCTION (from NUREG 1123, Rev 2.):

7 - Instrumentation

REASON FOR REVISION:

Formatting.

Validation Time: 10 Minutes (approximate).

APPLICABLE METHOD OF TESTING

Performance: Simulate ___ Actual ✓ Unit: 2

Setting: Control Room ___ Simulator ✓ (Not applicable to In-Plant JPMs)

Time Critical: Yes ___ No ✓ Time Limit N/A

Alternate Path: Yes ___ No ✓

EVALUATION

Trainee:_____

JPM: Pass _____ Fail _____

Remedial Training Required: Yes _____ No _____

Did Trainee Verify Procedure?: Yes _____ No _____

Comments: _____

_____

_____

_____

_____

_____

_____

_____

_____

Comments reviewed with Student

Evaluator Signature: _____ Date:_____

TASK CONDITIONS:

1. Control Rod 30-07 has been fully inserted to suppress a fuel leak.
2. Control Rod 30-07 has not been bypassed in the Rod Worth Minimizer.
3. The RWM does not have a critical self test failure.
4. 2OP-07, Section 4.0 Prerequisites are met.
5. The Reactor Engineer has been notified and Technical Specifications have been reviewed.

INITIATING CUE:

The Unit SCO directs you to bypass Control Rod 30-07 in the Rod Worth Minimizer and inform him when the rod has been bypassed.