Client: Duke Power Carolinas, LLC	Calculation No. 07Q3691-CAL-004

Title: Analysis of Buried HDPE Piping System— Nuclear Service Water (NSW) Return Line Diesel Generator "1A" Unit 1

Project: Catawba Unit #1 and Unit #2 – Buried HDPE Pipe Design and Analysis

Method: Computer and Manual Calculations

Acceptance Criteria: N/A

Remarks:

Verification Method
- ☒ Design Review Method
- ☐ Alternate Calculation
- ☐ Qualification Test
- ☐ Other
- ☐ No Verification Necessary

Results:

Computer Programs Used

Program Name	Version/Revision	Computer Type	QA Verified
ADLPIPE	4F10.1	PC	YES
Microsoft Word	2003	PC	N/A
Mathcad	2000	PC	N/A

REVISIONS

Revision No.	0		
Description	Original Issue		
Total Pages (Cumulative)	111		
By/Date	S. Haile 11-10-08		
Checked/Date	Bruce P. Dubowchy 11-11-08		
Approved/Date	11-11-08		

S&A Stevenson & Associates	CALCULATION COVER SHEET	CONTRACT NO. 07Q3691

U:\07Q3691 - Duke HDPE Analysis\10_Calculations\07Q3691-CAL-004\07Q3691-CAL-004_11-10.doc

CALCULATION CONTINUATION SHEET

Client	Duke Power Carolinas, LLC			Calculation No.	07Q3691-CAL-004		
Project	Catawba Unit # 1 and #2 – Buried HDPE Piping Design and Analysis						
Title	Analysis of Buried HDPE Piping System— Nuclear Service Water (NSW) Return Line Diesel Generator "1A" Unit 1						
By:		Date	11/10/08	Chk'd by		Date	11/11/08

TABLE OF CONTENTS

TABLE OF CONTENTS 2
DOCUMENT INDEX 4
1.0 PURPOSE OR OBJECTIVE 6
2.0 SCOPE AND LIMITATIONS 6
3.0 DEFINITIONS 6
4.0 ASSUMPTIONS 8
4.1 Assumptions Not Requiring Verification 8
4.2 Assumptions To Be Verified 8
5.0 ANALYSIS METHODOLOGY AND APPROACH 8
5.1 Background 8
5.2 Methodology and Approach 9
5.2.1 HDPE Calculations Dependent Only on Design Conditions and Pipe Size 9
5.2.2 HDPE Calculations Requiring the Input of Geometry Specific Loads 12
5.2.3 Steel Pipe Criteria 15
6.0 ANALYSIS INPUTS 15
6.1 Design Loads 15
6.2 Pipe Properties 15
6.3 Material Properties 16
6.4 HDPE to Steel Boundary 19
6.5 HDPE Elbows 19
6.6 Stress Indices and SIFs 22
6.7 Soil Springs 23
6.8 Seismic Analysis Input 24
6.8.1 Seismic Anchor Motion 24
6.8.2 Seismic Wave Passage 24
6.8.3 Decoupling of 12" Steel Pipe 24
6.9 Piping Layout 24
6.10 Pipe Criteria – Steel and HDPE 26
6.11 Acceptance Criteria – Steel and HDPE 28
7.0 ANALYSIS 30
7.1 Computer Model 30
7.2 Results of ADLPIPE Analysis 31
7.2.1 Load Cases Analyzed 31
7.2.2 Summary of HDPE Loads at Critical Locations 32
7.3 Calculations per ASME BPVC Code Case N-755 34
7.5 Flange Summary for Unit 1 HDPE Pipe 45
8.0 RESULTS 46
8.1 Functionality Capability and Break Postulation 47
8.2 Final Loads at the Anchor at the Diesel Generator Building due to Soil Effects 50
8.3 Final Loads at the Centerline of the 42" ø Supply Line due to Soil Effects 50
8.4 Branch Line Qualification 51

9.0 CONCLUSIONS 51
Appendix A 52
Appendix B 59

CALCULATION CONTINUATION SHEET

Client	Duke Power Carolinas, LLC			Calculation No.		07Q3691-CAL-004	
Project	Catawba Unit # 1 and #2 – Buried HDPE Piping Design and Analysis						
Title	Analysis of Buried HDPE Piping System— Nuclear Service Water (NSW) Return Line Diesel Generator "1A" Unit 1						
By:		Date	11/10/08	Chk'd by		Date	11/11/08

DOCUMENT INDEX

DIN No.	Document Number/Title	Revision, Edition, Date	Reference	Input	Output
1	"Nondestructive Evaluation: Seismic Design Criteria for Polyethylene Pipe Replacement Code Case," EPRI, Palo Alto, CA, 2006, Report Number 1013549	September 2006	☐	☒	☐
2	"Guidelines for the Seismic Design of Oil and Gas Pipeline Systems," ASCE	1984	☐	☒	☐
3	"Catawba Updated Final Safety Analysis Report"	Rev. 12, April 2006	☐	☒	☐
4	"Polyethylene (PE) Pressure Pipe and Fittings, 4in. (100 mm) through 63 in. (1,575 mm) for Water Distribution and Transmission," ANSI/AWWA C906-99, American Water Works Association, 6666 West Quincy Ave., Denver, CO 80235	March 1, 2000	☐	☒	☐
5	Catawba Nuclear Station Units 1&2, Yard Layout, Buried Systems, Drawing No. CN-1038-03.		☐	☒	☐
6	Catawba Nuclear Station Units 1&2, Yard Layout, Buried Systems, Drawing No. CN-1038-04.		☐	☒	☐
7	Catawba Nuclear Station Units 1&2, Yard Layout, Buried Systems, Drawing No. CN-1038-09.		☐	☒	☐
8	HDPE Product Catalog, ISCO Industries	Version 2.1, 2005	☐	☒	☐
9	Ladish General Catalog No. 55	1971	☐	☒	☐
10	Navco Piping Catalog	Edition No. 10, June 1, 1974	☐	☒	☐
11	ASME Boiler and Pressure Vessel Code, Section III, Division I, Subsection ND-3600	1998 Edition with 2000 Addenda	☐	☒	☐
12	ASME Code Case N-755, High Density Polyethylene (HPDE) Buried Pipe, Section III, Division I, Class 3	March 22, 2007	☐	☒	☐
13	CNS ISFSI Haul Path Evaluation Calculation, CNM 1140.04-0005 001	Rev. 0, December 21, 2006	☐	☒	☐
14	Request for relief Number 06-CN-003 "Use of Polyethylene Material in Nuclear Safety-Related Piping Applications" (TAC Numbers MD 3729 and MD 3730)	March 13, 2008	☒	☐	☐
15	S&A Calculation 07Q3691-CAL-001 "Calculation of Soil Spring Stiffness for Buried HDPE Pipe"	Rev. 0, 2008	☐	☒	☐
16	Catawba Nuclear Station Units 1 and 2 Calculation CNC-1206.02-84-001, "Nuclear Service Water Pipe Seismic Analysis (Buried Portion)"	Rev. 16, 9-7-06	☐	☒	☐

CALCULATION CONTINUATION SHEET

Client	Duke Power Carolinas, LLC			Calculation No.		07Q3691-CAL-004	
Project	Catawba Unit # 1 and #2 – Buried HDPE Piping Design and Analysis						
Title	Analysis of Buried HDPE Piping System— Nuclear Service Water (NSW) Return Line Diesel Generator "1A" Unit 1						
By:		Date	11/10/08	Chk'd by		Date	11/11/08

DIN No.	Document Number/Title	Revision, Edition, Date	Reference	Input	Output
17	Bonney Forge Stress Intensification Factors: Weldolet, Sockolet, Thredolet, Sweepolet, Latrolet, Insert Weldolet, Bulletin SI-1	1988	☒	☐	☐
18	S&A Calculation 07Q3691-CAL-002 "Calculation of Equivalent Thermal Strain for Seismic Analysis of Buried HDPE Pipe"	Rev. 0, 2008	☐	☒	☐
19	Catawba Nuclear Station Specification CNS-1206.02-01-008	Rev. 1, January 3,1998	☐	☒	☐
20	018B00Y020GPLOT_Digitized Spectra (4-14)	-	☐	☒	☐
21	Young, W. C., "Roark's Formulas for Stress and Strain".	McGraw-Hill, Sixth Edition, 1989	☒	☐	☐
22	Fatigue and Capacity Testing of High-Density Polyethylene Pipe and Pipe Components Fabricated from PE4710 (1015062)	Final Report, December 2007	☒	☐	☐
23	3691-LSC-002, "HDPE Pipe Interface Loads Applied to Steel Pipe"	March 17, 2008	☒	☐	☐
24	S&A Calculation 07Q3691-CAL-011, "Definition of Break Selection Criteria and Functional Capability Criteria for the Piping Design Specification"	August 30,2008	☒	☐	☐
25	S&A Calculation 07Q3691-CAL-013, "Technical Basis for Design Acceptance Criteria"	September, 30, 2008	☐	☒	☐
26	CNS-1574-00_RN-00-0002, " ASME Design Specification for the Nuclear Service Water System (RN) Diesel Generator Cooling Supply and Return Piping; Modification, Repair, and Replacement"	Preliminary Draft	☐	☒	☐
27	S&A Document 3691-DI-001, " Design Instructions for Analysis of Polyethylene Pipe"	Rev. 0, July 2008	☒	☐	☐
28	Welding Research Council Bulletin 300, "Technical Position on Industry Practice"	December, 1984	☒	☐	☐
29	ASME Boiler and Pressure Vessel Code, Section III, Division I, Subsection ND-3600	1989 Edition	☐	☒	☐

1.0 PURPOSE OR OBJECTIVE

Catawba Nuclear Station has decided to replace the buried nuclear service water piping lines connecting the 42-in Nuclear Service Water System (NSWS) supply and return headers to Unit 1 and Unit 2 Diesel Generator (DG) buildings. The existing 10-in carbon steel piping will be replaced by 12-in High-Density Polyethylene (HDPE) piping. The purpose of this calculation is to demonstrate the Design Basis ASME BPVC Code and Regulatory compliance for the buried HDPE piping system connecting the 42-in Return Header 'A' to the DG Building of Unit 1.

2.0 SCOPE AND LIMITATIONS

Results of this calculation are limited to the 12-in buried HDPE piping system returning cooling water from the Diesel Generator Building of Unit 1 to the 42-in NSWS Return Header 'A'. The piping model goes from the anchor at the wall (column lines 76 & AA) to the 42"ø Return Header 'A' pipe of the NSWS. There is a manhole (MH-2) at Diesel Generator Building of Unit 1, and there is also a manhole (MH-5) at the connection to the 42" ø Return Header 'A' pipe of the NSWS. The manholes provide access to the steel-to-HDPE flanged connections for the purpose of inspection and maintenance of the steel to HDPE connections. The HDPE pipe passes through the wall penetration of the manhole, but it is not attached to the structure. The manhole does not transfer any load to the HDPE pipe. The gap between the manhole penetration and the HDPE pipe is sealed to prevent water from entering the manhole through this penetration. The piping qualification includes the following:

(a) The steel pipe from the Unit 1 Diesel Generator Building anchor to the steel-HDPE pipe flange
(b) The HDPE piping from the steel – HDPE flange near the Unit 1 DG Building to the steel-HDPE flange near the 42" NSWS Return Header 'A'
(c) The steel pipe from the steel – HDPE flange to the 42" NSWS Return Header 'A', including qualification of the 12" branch connection to the 42-in NSWS return header pipe

3.0 DEFINITIONS

Nomenclature per Ref. [14], "Request for Relief Number 06-CN-003 "Use of Polyethylene Material in Nuclear Safety-Related Piping Applications" (TAC Numbers MD 3729 and MD 3730)." This nomenclature may differ somewhat from the nomenclature used in ASME BPVC Code Case N-755 Ref. [12]. Nomenclature is provided at point of use.

A = Cross sectional area of pipe [in^2]
α = Coefficient of thermal expansion [in/in/^{o}F]
B_1 and B_2 = Primary stress indices
B' = Burial factor
BS = Building settlement loads
c = Allowance for erosion or mechanical damage, [in]
D = Outside diameter of pipe [in]
DR = Dimensional ratio of pipe; for OD-controlled pipe, DR = D/t

DW = Deadweight of pipe and contents [lb]
E' = Modulus of soil reaction [psi]
E_{pipe} = Elastic modulus of pipe [psi]
f_0 = Ovality correction factor
F = Impact factor for surface loads.
FS = Factor of safety (FS = 2.0 Level A, 1.8 for Level B, and 1.5 for Levels C and D)
γ_{soil} = Specific weight of the soil [lb/ft^3]
γ_{water} = Specific weight of the water [lb/ft^3]
H = Height of fill (or cover) above top of pipe [ft]
H_{gw} = height of groundwater above pipe [ft]
k = Longitudinal stress factor
K_b = Bedding factor, usually 0.1.
K_0 = Coefficient of soil pressure at rest, 0.5 to 1.0, may conservatively be taken as 1.0
K_{po} = Spring due to pipe ovaling [lb/in]
L = Deflection lag factor (recommended values: 1.0 for short term and 1.5 for long term loads)
OBE_w = Operating Basis Earthquake due to effects of seismic wave passage
OBE_S = Operating Basis Earthquake due to effects of soil movement
OBE_D = Operating Basis Earthquake due to effects of anchor movements
P = Long-term design gage pressure for the pipe at the specified design temperature [psi]
P_A, P_B, P_C and P_D = Maximum Pressures for Service Levels A through D [psi]
P_{bs}, P_{cs}, and P_{ds} = Surge Pressures for Service Levels B through D [psi]
P_E = Vertical soil pressure loads due to weight of soil cover [psi]
P_{gw} = Groundwater pressure loads [psi]
P_L = Vertical surcharge (transportation) loads [psi]
PS = Loads due to pump startup and shutdown
R_b = Buoyancy reduction factor
S_h = Design allowable stress for HDPE piping at temperature [psi]
S_y = Yield stress [psi]
SSE_w = Safe Shutdown Earthquake due to effects of seismic wave passage
SSE_S = Safe Shutdown Earthquake due to effects of soil movement
SSE_D = Safe Shutdown Earthquake due to effects of anchor movements
$T_{A,max}$, $T_{B,max}$, $T_{C,max}$ and $T_{D,max}$ = Maximum temperature for Service Levels A through D [^{o}F]
$T_{A,min}$, $T_{B,min}$, $T_{C,min}$ and $T_{D,min}$ = Minimum temperature for Service Levels A through D [^{o}F]
t = Actual (not nominal) pipe wall thickness [in]
t_{min} = Minimum allowable pipe wall thickness [in]
VOT = Valve Operating Transients
ν = Poisson's ratio for piping
ν_r = Poisson ratio for the bedrock
W_P = Weight of empty pipe [lb/ft]
W_w = Groundwater floatation loads (usually equal to weight of water displaced by pipe) [lb]
Z = Section modulus of pipe cross section [in^3]

4.0 ASSUMPTIONS

4.1 Assumptions Not Requiring Verification

[1] Due to the small Seismic Building Displacement of the Unit 1 DG Building (0.003"), the seismic response of the buried steel pipe from the DG building anchor to the HDPE piping is predominantly due the effect of seismic wave passage. The effect of the DG Building Amplified Floor Response does not need to be considered in the analysis of the buried pipe, Ref. [25].

[2] Per discussion with Catawba Systems Engineering, it is concluded that the buried HDPE piping at Catawba is not subjected to any pressure surge loads, Ref. [25].

[3] Seismic anchor motions of 0.003" are much less than 1/16" and therefore will have negligible effect on the piping and are not considered in the analysis.

4.2 Assumptions To Be Verified

[1] Stress Intensification Factors (SIF's) for mitered elbows less than 90º are enveloped by SIF's of 90º elbows

5.0 ANALYSIS METHODOLOGY AND APPROACH

5.1 Background

The buried water supply system to and from the Diesel Generator (DG) buildings to the 42-in Nuclear Service Water System (NSWS) currently uses 10-in carbon steel pipes. Catawba Nuclear Station (CNS) has decided to replace the 10-in steel pipes with 12-in High-Density Polyethylene (HDPE) pipes. There are a total of eight cooling water piping lines—four supply lines and four return lines.

- Two cooling water supply lines to the DG building of Unit 1. One line originates from the 42-in Supply Header 'A" and the other originates from the 42-in Supply Header 'B'.
- Two cooling water supply lines to the DG building of Unit 2. One line originates from the 42-in Supply Header 'A" and the other originates from the 42-in Supply Header 'B'.
- Two cooling water return lines originating from the DG building of Unit 1. One line returns water to the 42-in Return Header 'A" and the other returns water to the 42-in Return Header 'B'.
- Two cooling water return lines originating from the DG building of Unit 2. One line returns water to the 42-in Return Header 'A" and the other returns water to the 42-in Return Header 'B'.

The HDPE pipes are connected to the steel pipes by means of a flanged joint. At the DG building wall entrance, a transition is made from 10-in to 12-in using a 10x12 steel reducer with flanges to provide the necessary flanged connection to the HDPE pipe and a means of providing future access for examination of all joints from the inside surface per Ref. [14]. At the 42-in header side, a short 12-in flanged steel

pipe is welded to the header. An additional steel flanged joint attached to the 12-in pipe provides the necessary connection to the HDPE pipe and serves as future access. The HDPE piping system is considered anchored at both ends.

The buried HDPE piping system considered in this calculation is the cooling water return line from the DG Building of Unit 1 to the 42-in Return Header 'A'. The effects of pressure, deadweight, seismic and temperature loads on the buried HDPE piping are analyzed.

5.2 Methodology and Approach

The piping is qualified to the requirements of the Piping Design Specification Ref. [26]. The Design Specification is based on ASME BPVC Code Case N-755 Ref. [12] and the commitments in Relief Request Number 06-CN-003 Ref. [14]. In addition, further guidance on design and analysis methods is provided in EPRI Report 1013549 Ref. [1] and S & A Design Instruction 3691-DI-001 Ref. [27]. However, the controlling design document is the Piping Design Specification Ref. [26].

The Code of Record for the Design and Analysis of the HDPE Pipe is the 1998 Edition of the ASME Boiler and Pressure Vessel Code, Section III, Division 1, Subsection ND up to and including the 2000 Addenda. However, ND-3600 of the ASME Boiler and Pressure Vessel Code 1989 Edition shall be used to comply with the limitations imposed by 10 CFR 50.55 a (b) (1) (iii) except as amended by the governing document Relief Request Number 06-CN-003, Ref. [14]. The piping is classified as ASME Class 3 Duke Class C.

The piping system is analyzed using a combination of hand calculations and the ADLPIPE computer program. ADLPIPE analyzes complex piping systems subjected to static and dynamic loads. The basic load cases (deadweight, thermal, seismic OBE, seismic SSE, etc.) and their combinations (such as thermal plus seismic) are included in the ADLPIPE analysis.

Stresses in steel pipes are automatically computed by ADLPIPE according to an ASME Code year of interest. However, ADLPIPE does not calculate the stresses for all piping load cases and combinations in the HDPE pipe because HDPE material, properties and qualification criteria are not yet included in the ADLPIPE computer code. Therefore, manual calculations are performed for the HPDE piping according to the relief request Ref. [14] which is consistent with the ASME BPVC Code Case N-755 [Ref. 12]. The required manual calculations are presented in sections 5.2.1 and 5.2.2.

5.2.1 HDPE Calculations Dependent Only on Design Conditions and Pipe Size

These calculations do not require ADLPIPE analysis results as input. The HDPE pipe size and the design conditions are the only inputs needed to perform the manual calculations in this section.

Minimum Required Wall Thickness

Per Section 3131.1 of Ref. [12], the minimum required wall thickness (t_{min}) of straight pipe sections is determined from:

$$t_{\min} = \frac{P \cdot D}{2S + P} + c \tag{5.1}$$

where:

P = internal design gage pressure at the specified design temperature [psi]
D = outside diameter of pipe [in]
S = allowable stress [psi] from Table 3021-1 Ref. [14]
c = allowance for mechanical and erosion damage [in]

The actual wall thickness of the HDPE pipe shall not be less than t_{min} .

Ring Deflection

Per Section 3210 of Ref. [12], the deflection of the pipe diameter (Ω) due to soil and surcharge loads should be less than the maximum allowable value (Ω_{max}):

$$\Omega = \frac{1}{144} \cdot \frac{K_b \cdot L \cdot P_E + K_b \cdot P_L}{\frac{2E_{pipe}}{3}\left(\frac{1}{DR-1}\right)^3 + 0.061 F_s \cdot E'} \le \Omega_{\max} \tag{5.2}$$

where:

$P_E = \rho_{saturated} H_{gw} + \rho_{dry}(H - H_{gw})$
K_b = bedding factor
L = deflection lag factor
P_E = vertical soil pressure due to earth loads [lb/ft^2]
P_L = vertical soil pressure due to surcharge loads [lb/ft^2]
E_{pipe} = modulus of elasticity of pipe at 50 years [psi]
DR = dimensional ratio of pipe
F_s = soil support factor
E' = modulus of soil reaction [psi]
$\rho_{saturated}$ = density of saturated soil [lb/ft^3]
ρ_{dry} = density of dry soil [lb/ft^3]
H = height of ground cover [ft]
H_{gw} = height of groundwater above pipe [ft]

Compression of Sidewalls

The circumferential compressive stress (σ_{SW}) in the sidewalls of pipe and miters due to soil and surcharge loads per Section 3220 of Ref. [12] should be less than 1000 psi. This 1000 psi is based on PE-3408 material and assumes a temperature of 70º F. Per Ref. [25] the allowable value at a temperature of 140º F for PE-4710 material is 530 psi. The value used in this analysis is 500 psi which is conservative. This 140º F temperature was selected because it is the maximum discharge line temperature. This lower bound value is conservatively applied to this piping analysis.

$$\sigma_{SW} = \frac{(P_E + P_L) \cdot DR}{2 \times 144} \leq 500 psi \qquad (5.3)$$

where:

P_E = vertical soil pressure due to earth loads [lb/ft^2]
P_L = vertical soil pressure due to surcharge loads [lb/ft^2]
DR = dimensional ratio of pipe

Buckling Due to External Pressure

External pressure from groundwater, earth loads, and surcharge loads on the buried HDPE pipe shall not cause the pipe to buckle per Section 3221.1 of Ref. [12]; that is,

$$\frac{P_E + P_L + P_{gw}}{144} \leq 2.8 \cdot \left[R_b \cdot B' \cdot E' \frac{E_{pipe}}{12 \cdot (DR-1)^3} \right]^{1/2} \qquad (5.4)$$

where:

$$R_b = 1 - 0.33 \frac{H_{gw}}{H}$$

$$B' = \frac{1}{1 + 4e^{-0.065H}}$$

P_E = vertical soil pressure due to earth loads [lb/ft^2]
P_L = vertical soil pressure due to surcharge loads [lb/ft^2]
P_{gw} = pressure due to groundwater [lb/ft^2]
R_b = buoyancy reduction factor
B' = burial factor
E_{pipe} = modulus of elasticity of pipe [psi]
E' = modulus of soil reaction [psi]
DR = dimensional ratio of pipe
H = depth of cover [ft]
H_{gw} = height of groundwater above pipe [ft]

Effects of Negative Internal Pressure

Per Section 3221.2 of Ref. [12], when the pipe is subjected to a negative internal pressure, it should withstand the differential pressure (ΔP) without credit for the surrounding soil, that is:

$$\Delta P \leq \frac{f_o}{2}\frac{2E_{pipe}}{(1-\upsilon^2)}\left(\frac{1}{DR-1}\right)^3 \qquad (5.5)$$

where:

f_o = ovality correction factor
E_{pipe} = modulus of elasticity of pipe [psi]
ν = Poisson's ratio (0.35 for short duration loads to 0.45 for long duration loads)
DR = dimensional ratio of pipe

Floatation

To prevent floatation by groundwater, the buried pipe must have sufficient cover or be anchored to the ground. Per Section 3222 of Ref. [12], the following criterion must be satisfied:

$$W_w < W_P + \frac{P_E \cdot D}{12} \qquad (5.6)$$

where:

W_w = weight of water displaced by pipe [lb/ft]
W_P = weight of empty pipe [lb/ft]
P_E = vertical soil pressure due to earth loads [lb/ft^2]
D = outside pipe diameter [in]

5.2.2 HDPE Calculations Requiring the Input of Geometry Specific Loads

The manual calculations in this section require the ADLPIPE analysis results as input. HDPE pipe stresses are computed using the forces and moments obtained from ADLPIPE analysis. The stress calculations are performed both for straight pipes and mitered elbows.

Longitudinal Stress

Per Section 3223.1 of Ref. [12], the longitudinal stresses due to axial forces and bending moments resulting from applied mechanical loads shall not exceed $k*S$:

$$B_1\frac{P_a \cdot D}{2t} + 2B_1\frac{F_a}{A} + B_2\frac{M}{Z} \leq k \cdot S \qquad (5.7)$$

where:

B_1 and B_2 = primary stress indices defined in Table 3223-1 of Ref. [12]
P_a = design or service level A, B, C or D pressure [psi]
D = outside diameter of pipe at the section where the evaluation is conducted [in]
t = nominal pipe wall thickness at the section where the evaluation is conducted [in]
F_a = axial force due to the specified design, level A, B, C or D applied mechanical loads [lb]
M = resultant bending moment due to the specified design, level A, B, C or D applied mechanical loads [in.-lb]
A = cross sectional area of pipe at the section where the force is calculated [in^2]
Z = section modulus of pipe cross section at the section where the moment is calculated [in^3]
k = longitudinal stress factor per Table 3223-2 of Ref. [12]
S = allowable stress [psi] from Table 3021-1 Ref. [14]

Thermal Expansion and Contraction

(a) Fully Constrained Thermal Contraction

The tensile stress, per Section 3311.1 of Ref. [12], resulting from the assumption of fully constrained thermal contraction of the buried pipe when $T_{water} < T_{ground}$, increased by the tensile stress due to axial contraction from Poisson effect, shall not exceed the allowable stress (S):

$$\sigma_\tau = \left| E_{pipe} \cdot \alpha \cdot \Delta T - \upsilon \frac{P \cdot D}{2t} \right| \leq S \qquad (5.8)$$

where: E_{pipe} = modulus of elasticity of pipe [psi]
α = coefficient of thermal expansion [in/in/°F]
$\Delta T = T_{water} - T_{ground} < 0$, [°F]
ν = Poisson's ratio (0.35 for short duration loads to 0.45 for long duration loads)
P = internal design gage pressure including pressure spikes due to transients from anticipated water hammer events [psi]
D = outside pipe diameter [in]
t = pipe wall thickness [in]
S = allowable stress [psi] from Table 3021-1 Ref. [14]

(b) Fully Constrained Thermal Expansion

The tensile stress resulting from the assumption of fully constrained thermal expansion of the buried pipe when $T_{water} > T_{ground}$, per Section 3311.2 of Ref. [12], shall not exceed the allowable stress (S):

$$E_{pipe} \cdot \alpha \cdot \Delta T \leq S \qquad (5.9)$$

where:

E_{pipe} = modulus of elasticity of pipe [psi]
α = coefficient of thermal expansion [in/in/°F]
$\Delta T = T_{water} - T_{ground} > 0$, [°F]
S = allowable stress [psi] from Table 3021-1 Ref. [14]

(c) Alternative Evaluation for Thermal Expansion or Contraction

When the soil stiffness is accounted for to calculate the pipe expansion and contraction stresses, per Section 3311.3 of Ref. [12], the stresses must satisfy the following condition:

$$\frac{i \cdot M_C}{Z} + \frac{F_{aC}}{A} \leq 1100 psi \tag{5.10}$$

where:

i = stress intensification factor
F_{aC} = axial force range due to thermal expansion or contraction and/or the restraint of free end displacement [lb]
M_C = resultant moment range due to thermal expansion or contraction and/or the restraint of free end displacement [in.-lb]
A = cross sectional area of pipe at the section where the force is calculated [in^2]
Z = section modulus of pipe cross section at the section where the moment is calculated [in^3]

Non-repeated Anchor Movements

Per Section 3312 of Ref. [12], the effects of any single non-repeated anchor movement shall meet the requirements of the following equation:

$$\frac{i \cdot M_D}{Z} + \frac{F_{aD}}{A} \leq 2 \cdot S \tag{5.11}$$

where:

i = stress intensification factor
F_{aD} = axial force due to the non-repeated anchor motion [lb]
M_D = resultant moment due to the non-repeated anchor motion [in.-lb]
A = cross sectional area of pipe at the section where the force is calculated [in^2]
Z = section modulus of pipe cross section at the section where the moment is calculated [in^3]
S = allowable stress [psi] from Table 3021-1 Ref. [14]

Seismic Induced Stresses

Per Section 3410 of Ref. [12], the stresses in the buried pipe due to soil strains caused by seismic wave passage, seismic soil movement, and building seismic anchor motion effects, where applicable, must satisfy the following equation:

$$\frac{i \cdot M_E}{Z} + \frac{F_{aE}}{A} \leq 1100 psi \tag{5.12}$$

where:

i = stress intensification factor
F_{aE} = axial force range due to the combined effects of seismic wave passage, seismic soil movement, and building seismic anchor motion effects [lb]

M_E = resultant moment range due to the combined effects of seismic wave passage, seismic soil movement, and building seismic anchor motion effects [in.-lb]
A = cross section area of pipe at the section where the force is calculated [in^2]
Z = section modulus of pipe cross section at the section where the moment is calculated [in^3]

Seismic wave passage, seismic soil movement, and building seismic anchor motions are combined by square root sum of the squares. This equation is applicable to both OBE and SSE. Ref. [25] Section 7.0 provides the basis of this applicability.

5.2.3 Steel Pipe Criteria

The steel pipe from the Diesel Generator building anchor to the HDPE pipe flange connection and from the HDPE pipe flange connection to the 42"ø return header are qualified in the ADLPIPE analysis in accordance with the requirements of Ref. [29]. The stresses for the steel pipe are shown in Section 7.4.

6.0 ANALYSIS INPUTS

6.1 Design Loads

Design temperature and pressure values supplied by Duke Power Carolinas and used as input in this calculation are listed in Table 6.1.

Design Temperature	140 ºF
Ambient Temperature	55 ºF
Minimum Temperature	32 ºF
Maximum Temperature	140 ºF
Design Pressure	60 psig
Operating Pressure	25 psig

6.2 Pipe Properties

Geometric and other relevant properties for the pipes used in this calculation are shown in Table 6.2. Outside diameter (OD), thickness and weight values for steel pipes were taken from standard piping catalogs, Ref. [10]. For IPS HDPE pipe, OD values were taken from ANSI/AWWA C906-99, Ref. [4], thickness values were obtained from Ref. [12,] and weight values were taken from manufacturers' literature [Ref. 8]. For the same nominal pipe size, the ODs of the HDPE pipes and the steel pipes are equal; therefore, the IPS sizing system is used.

	Cr-Mo Steel Pipe		Carbon Steel Pipe	HDPE Pipe/Elbow
Nominal size	10-in	12-in	12-in	12-in
Material	A6XLN(1)	A6XLN(1)	A-106, Gr. B	PE 4710(2)
Schedule	Standard	Standard	Standard	DR-11/DR-9
Outside Diameter [in]	10.75	12.75	12.75	12.75
Wall Thickness [in]	0.365	0.375	0.375	1.159/1.417
Contents	Water	Water	Water	Water
Wt. of Contents [lb/ft]	34.1	49.0	49.0	37.0/33.5
Wt. of Pipe [lbs/ft]	40.5	49.6	49.6	18.4/22

(1) This is a manufacturer's designation for a Cr-Mo alloy used for piping as SB-675 and SB-690, for forgings as SB-462, and for castings as SB-366.

(2) The cell classification of PE 4710 material is 445574C

6.3 Material Properties

Properties of A-106 carbon steel and A6XLN (Cr-Mo) are given in Tables 6.3a and 6.3b. The values in Table 6.3a were obtained from the 1989 edition of the ASME B&PVC, Section III [Ref. 29]. The values in Table 6.3b were obtained from the 1998 edition of the ASME B&PVC, Section III, Part D [Ref. 11].

Temperature, T [^oF]	32	55	65	100	140
Coeff. of Thermal Exp., α[in/in/^oF]	$6.5x10^{-6}$	$6.5x10^{-6}$	$6.5x10^{-6}$	$6.5x10^{-6}$	$6.5x10^{-6}$
Modulus of Elasticity, E [ksi]	27,900	27,900	27,900	27,900	27,900
Allowable Stress, S_c [psi]	15,000	15,000	15,000	15,000	15,000
S_h [psi	15,000	15,000	15,000	15,000	15,000
Yield Stress, S_y [psi]	35,000	35,000	35,000	35,000	35,000

Temperature, T [°F]	32	55	65	100	140
Coeff. of Thermal Expansion, α[in/in/°F]	8.2×10^{-6}	8.2×10^{-6}	8.2×10^{-6}	8.2×10^{-6}	8.4×10^{-6}
Modulus of Elasticity, E [ksi]	28,000	28,000	28,000	28,000	28,000
Allowable Stress(1), S_c [psi]	24,300	24,300	24,300	24,300	24,300
S_h [psi	24,300	24,300	24,300	24,300	24,300
Yield Stress(2), S_y [psi]	45,000	45,000	45,000	45,000	45,000

Notes:
(1) A6XLN is a manufacturer's designation for the following Cr-Mo alloys: SB-675, SB-690, and SB- 462. The values shown here correspond to the minimum values listed in the 1998 ASME Code.
(2) The yield strength shown here corresponds to that of SB-675, SB-690, and SB-462.

The mechanical properties of HDPE vary significantly with load duration. Therefore, different values must be used for different load cases. Tables 6.3c thru 6.3f provide the mechanical properties of HDPE for various load durations.

Mechanical properties obtained for 50-year load duration are given in Table 6.3c. These properties are used for deadweight and thermal analysis.

Temperature, T [°F]	32	55	65	100	140
Coeff. Of Thermal Exp., α[in/in/°F]	90×10^{-6}	90×10^{-6}	90×10^{-6}	90×10^{-6}	90×10^{-6}
Modulus of Elasticity(1), E [ksi]	28	28	28	23	12
Allowable Stress(2), S [psi]	800	800	800	620	430
Poisson's Ratio, ν [-]	0.45	0.45	0.45	0.45	0.45

(1) Per Table 3210-3 of Ref. [12]
(2) Per Table 3131-1 of Ref. [12]. The allowable stress at 140° F is in development. The value shown here at 140° F is the S&A best estimate based on values provided in Table 3131-1 of Ref. [12].

Mechanical properties obtained for short-term load duration are shown in Table 6.3d. These are used for OBE, SSE, and equivalent thermal strain analysis.

CALCULATION CONTINUATION SHEET

Client	Duke Power Carolinas, LLC			Calculation No.		07Q3691-CAL-004	
Project	Catawba Unit # 1 and #2 – Buried HDPE Piping Design and Analysis						
Title	Analysis of Buried HDPE Piping System— Nuclear Service Water (NSW) Return Line Diesel Generator "1A" Unit 1						
By:		Date	11/10/08	Chk'd by		Date	11/11/08

Temperature, T [^oF]	32	55	65	100	140
Coeff. Of Thermal Exp., α[in/in/^oF]	$90x10^{-6}$	$90x10^{-6}$	$90x10^{-6}$	$90x10^{-6}$	$90x10^{-6}$
Modulus of Elasticity(1), E [ksi]	110	110	110	100	50
Allowable Stress(2), S [psi]	1200	1200	1200	940	630
Poisson's Ratio, ν [-]	0.35	0.35	0.35	0.35	0.35

(1) Per Table 3210-3 of Ref. [12]
(2) Per Table 3223-3 of Ref. [12]

Temperature, T [^oF]	32	55	65	100	140
Coeff. Of Thermal Exp., α [in/in/^oF]	$90x10^{-6}$	$90x10^{-6}$	$90x10^{-6}$	$90x10^{-6}$	$90x10^{-6}$
Modulus of Elasticity(1), E [ksi]	44	44	44	36	18
Allowable Stress(2), S [psi]	840	840	840	620	430
Poisson's Ratio, ν [-]	0.45	0.45	0.45	0.45	0.45

(1) Per Table 3210-3 of Ref. [12]
(2) The allowables for 10-year duration listed in Table 3131-1 of Ref. [12] are used. This is conservative.

Temperature, T [^oF]	32	55	65	100	140
Coeff. Of Thermal Exp., α[in/in/^oF]	$90x10^{-6}$	$90x10^{-6}$	$90x10^{-6}$	$90x10^{-6}$	$90x10^{-6}$
Modulus of Elasticity(1), E [ksi]	32	32	32	26	13
Allowable Stress(2), S [psi]	840	840	840	620	430
Poisson's Ratio, ν [-]	0.45	0.45	0.45	0.45	0.45

(1) Per Table 3210-3 of Ref. [12]
(2) Per Table 3131-1 of Ref. [12]

6.4 HDPE to Steel Boundary

The HDPE pipe is connected to the steel pipe by means of a flanged connection. The following piping components are used for the joints at the entrance to the DG building wall and at the 42-in header:

- A 10-in by 12-in steel reducer
- 10-in, 150-lb ANSI B16.5 raised face welding neck steel flanges
- 12-in, 150-lb ANSI B16.5 raised face welding neck steel flanges
- A 12-in, short-radius, 90° steel elbow
- Two HDPE flange adapters
- Two special steel backup rings that possess the same bolt pattern as 12-in, 150-lb steel flanges and are used in conjunction with the HDPE adapters

Relevant properties for the above piping components were obtained from manufacturers' catalogs – Ref. [9] for the steel components and Ref. [8] for the HDPE components and steel backup rings. The properties are listed in Table 6.6.

Piping Component	Nominal Size [in]	Thickness [in]	Length [in]	O. D. [in]	Weight [lb]
150-lb, Welding Neck Steel Flange	10	0.365	4	12(1)	54
	12	0.375	4.5	14.375(1)	88
Steel Reducer	10x12	NA (2)	8	NA (2)	34
90° Steel Elbow	12	0.375	12(3)	12.75	80
HDPE Flange Adapter	12	1.55	12	12.75	24
Steel Backup Ring	12	1.25	1.25	19	24

(1) These values represent the diameter of the flange hub at base.
(2) OD and thickness for a reducer are variable and are not required as input.
(3) This is the center to face length; it is also equal to the radius of the elbow.

6.5 HDPE Elbows

The piping system includes 30°, 45°, 60° and 90° HDPE mitered elbows. The mitered elbows are size DR-9 (one DR ratio lower than the HDPE pipe that is DR-11) to comply with the requirements of ASME BPVC Code Case N-755 Paragraph -3132(d) Ref. [12]. The 45° and 90° elbows are modeled according to the manufacturer's catalog specifications [Ref. 8]. The 45° mitered elbow has 3 segments as shown in Fig. 6.5a. The 90° mitered elbow has 5 segments as shown in Fig. 6.5b. The 30° mitered elbow has 3 segments as shown in Fig. 6.5c. The 60° mitered elbow has 5 segments as shown in Fig. 6.5d. This piping analysis has 30°, 45°, 60° and 90° mitered elbows in the model.

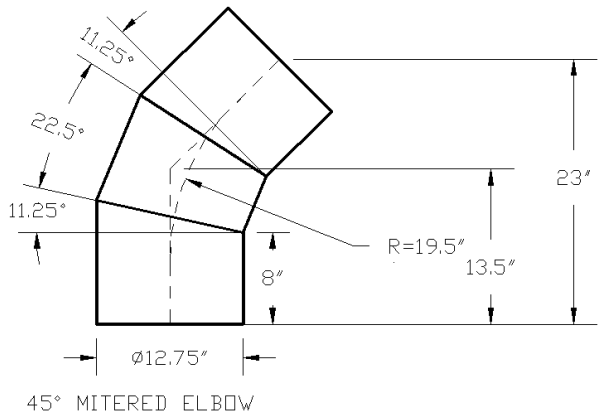

Fig. 6.5a: Geometry of a 45° HDPE mitered elbow

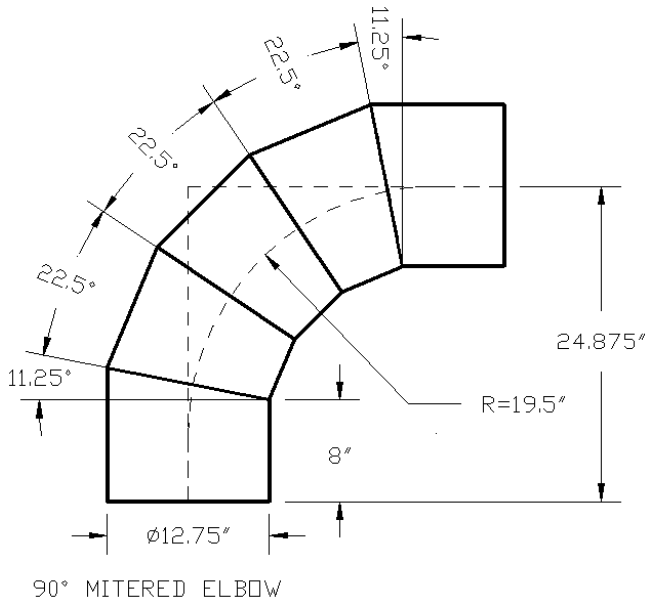

Fig. 6.5b: Geometry of a 90° HDPE mitered elbow

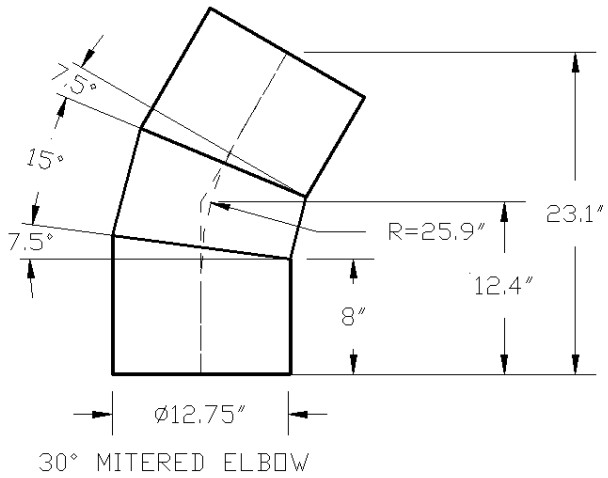

Fig. 6.5c: Geometry of a 30° HDPE mitered elbow

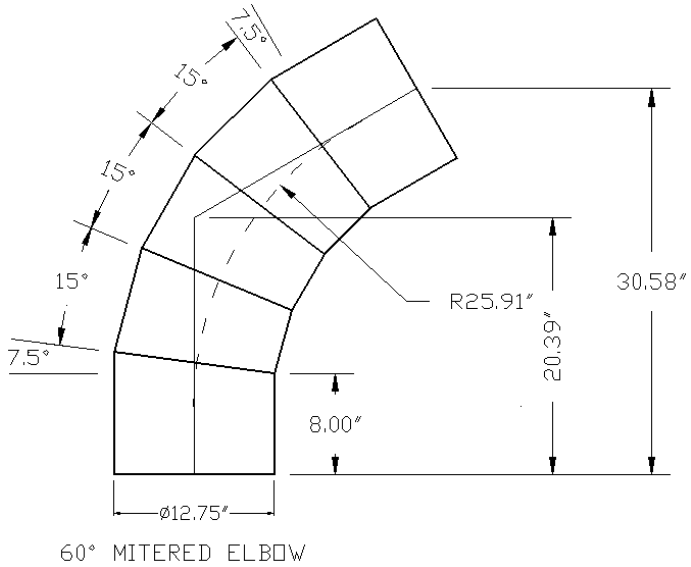

Fig. 6.5d: Geometry of a 60° HDPE mitered elbow

6.6 Stress Indices and SIFs

ADLPIPE automatically calculates stress indices and stress intensification factors (SIF) for the steel piping components based on the 1989 Code through 1991 Addenda [Ref. 29]. The 10-in and 12-in steel piping has butt welded fittings. The analysis is based on the 1989 Class 3 ASME Code.

6.6.1 HPDE Pipe

The buried HDPE piping is DR-11 butt welded, straight pipe. The following stress index and SIF values as listed in Tables 3223-1 and 3311.2-1 of Ref. [12], are used:

Stress Indices: $B_1 = 0.5$

$B_2 = 1.0$

Stress Intensification Factor: $i = 1.0$

6.6.2 HPDE Mitered Elbows

The 90º mitered elbows are DR-9. SIF and stress index values for these components, as obtained from Tables 3223-1 and 3311.2-1 of Ref. [12], are as follows:

Stress Indices: $B_1 = 0.69$

$B_2 = 1.64$

Stress Intensification Factor: $i = 2.0$

These values are for 5 segment 90º mitered elbows. Per Ref. [25] Section 6.1, it is assumed these values envelope the 5-segment 60º mitered elbow and the 3-segment 30º and 45º mitered elbows.

6.6.3 Flexibility Factors for Mitered Elbows

The flexibility factor calculated by ADLPIPE for the 12"ø mitered elbows is 1. 79 ≈ 1.82 which is the calculated flexibility factor per Table NB-3673.2 (b)(1), Section 5.6.2.3 of Ref. [22]. The preliminary mean flexibility factor from testing Ref. [22] of the 12"ø elbows is 2.15 for in-plane and 2.44 for out-of-plane Ref. [22]. The lower flexibility factor calculated by ADLPIPE will result in higher moments on the piping system due to less flexibility. The calculated Stress Intensification Factor (SIF) calculated from Table NB-3673.2(b)(1) for 12" ø elbows is 1.04 in-plane and 0.87 out-of-plane. This piping analysis uses a 2.0 SIF for in-plane and out-of-plane for the mitered elbows which is from Code Case N-755 Ref. [12].

6.6.4 Weldolet

A Weldolet is used for attaching the 12-in pipe to the 42-in header. The stress intensification factor for the Weldolet is determined from the following equation given in Ref. [17]:

$$i = \frac{0.9}{(3.3t/r)^{2/3}}$$

where: i = stress intensification factor

t = nominal wall thickness of run pipe [in]

r = mean radius of run pipe [in]

For the 42-in diameter pipe, t = 0.500 in. [Ref. 10], and the mean radius, r = (42–0.500)/2 = 20.75 in. The stress intensification factor is therefore:

$$i = \frac{0.9}{(3.3 * 0.5/20.75)^{2/3}} = 4.87$$

6.7 Soil Springs

The buried piping is subject to loads from earthquake, temperature and surrounding soil. To determine the pipe stresses resulting from these loads, the soil spring stiffness is required as input. For this piping system, the height of soil from top of the pipe is 5 ft. near the DG building, 6 ft near the 42-in header, and 7.5 ft elsewhere. Therefore, soil spring stiffness values obtained in Ref. [15] for H = 5ft, 6ft, and 7.5ft will be used as input in the ADLPIPE analysis of this piping. The soil spring stiffness values are shown in Table 6.7. Soil springs are generally applied at 2 ft intervals around elbows (over 6ft sections on each side of elbows) and at 10 ft intervals elsewhere.

[redacted]				
[redacted]	[redacted]	[redacted]	[redacted]	
H = 5 ft	Lateral	130	3120	15600
	Vertical	540	12960	64800
	Axial	425	10200	51000
H = 6 ft	Lateral	140	3360	16800
	Vertical	610	14640	73200
	Axial	500	12000	60000
H = 7.5 ft	Lateral	155	3720	18600
	Vertical	705	16920	84600
	Axial	615	14760	73800

Note that soil spring stiffness values for pipe sections of length other than shown in Table 6.7 can be determined by proportion.

6.8 Seismic Analysis Input

6.8.1 Seismic Anchor Motion

Per Calculation CNC-1206.02-84-0001 [Ref. 16] provided by CNS, the seismic displacement of the DG building is less than 0.003 inches for OBE or SSE analysis. The 42"ø Return Line is attached at the Auxiliary Building and has the following seismic displacements: lateral = 0.014328" < 1/16 in, axial = 0.01374" < 1/16 in, and vertical = 0.0" for OBE or SSE analysis. These displacements are considered insignificant for this analysis and a seismic anchor motion analysis is therefore not conducted.

6.8.2 Seismic Wave Passage

Since the piping system is completely buried and isolated from aboveground piping, the methodology of Non-Mandatory Appendix D of ASME BPVC Code Case N-755 will be used to qualify the piping for seismic wave passage. In Ref. [18], the strains due to seismic wave passage were computed and then converted to an equivalent thermal strain resulting in a temperature change (ΔT) of 10 ^{o}F. This change in temperature will be used as input in the ADLPIPE computer model as a thermal analysis of the piping system to determine the seismic loads.

6.8.3 Decoupling of 12" Steel Pipe

If the ratio of the moment of inertia of the run pipe to branch pipe (decoupled pipe) is equal to or greater than 25, the branch piping may be considered to have no significant effect on the response of the run pipe, Ref. [28]. $I_{12\text{" branch pipe}}$ = 300 in^4; $I_{42\text{" run pipe}}$ = 14037 in^4; ratio of run to branch is 46. The analysis of the decoupled piping shall consider the thermal, seismic, and other movements of the run pipe at the intersection point. There are no thermal or seismic anchor movements (See section 6.8.1) on the run pipe. The steel buried pipe will not have seismic response from the seismic wave passage. Therefore, there are no anchor movements at the 12" pipe (branch) to the 42" pipe (run) connection.

6.9 Piping Layout

The layout of the piping system is shown in the following drawings provided by Duke Power Carolinas: CN-1038-03 [Ref. 5], CN-1038-04 [Ref. 6] and CN-1038-09 [Ref. 7]. Dimensions and orientations of piping shown on these drawings were used in generating the ADLPIPE computer model for the piping system. A sketch of the piping layout is shown in Fig. 6.9

CALCULATION CONTINUATION SHEET

Client	Duke Power Carolinas, LLC			Calculation No.		07Q3691-CAL-004	
Project	Catawba Unit # 1 and #2 – Buried HDPE Piping Design and Analysis						
Title	Analysis of Buried HDPE Piping System— Nuclear Service Water (NSW) Return Line Diesel Generator "1A" Unit 1						
By:		Date	11/10/08	Chk'd by		Date	11/11/08

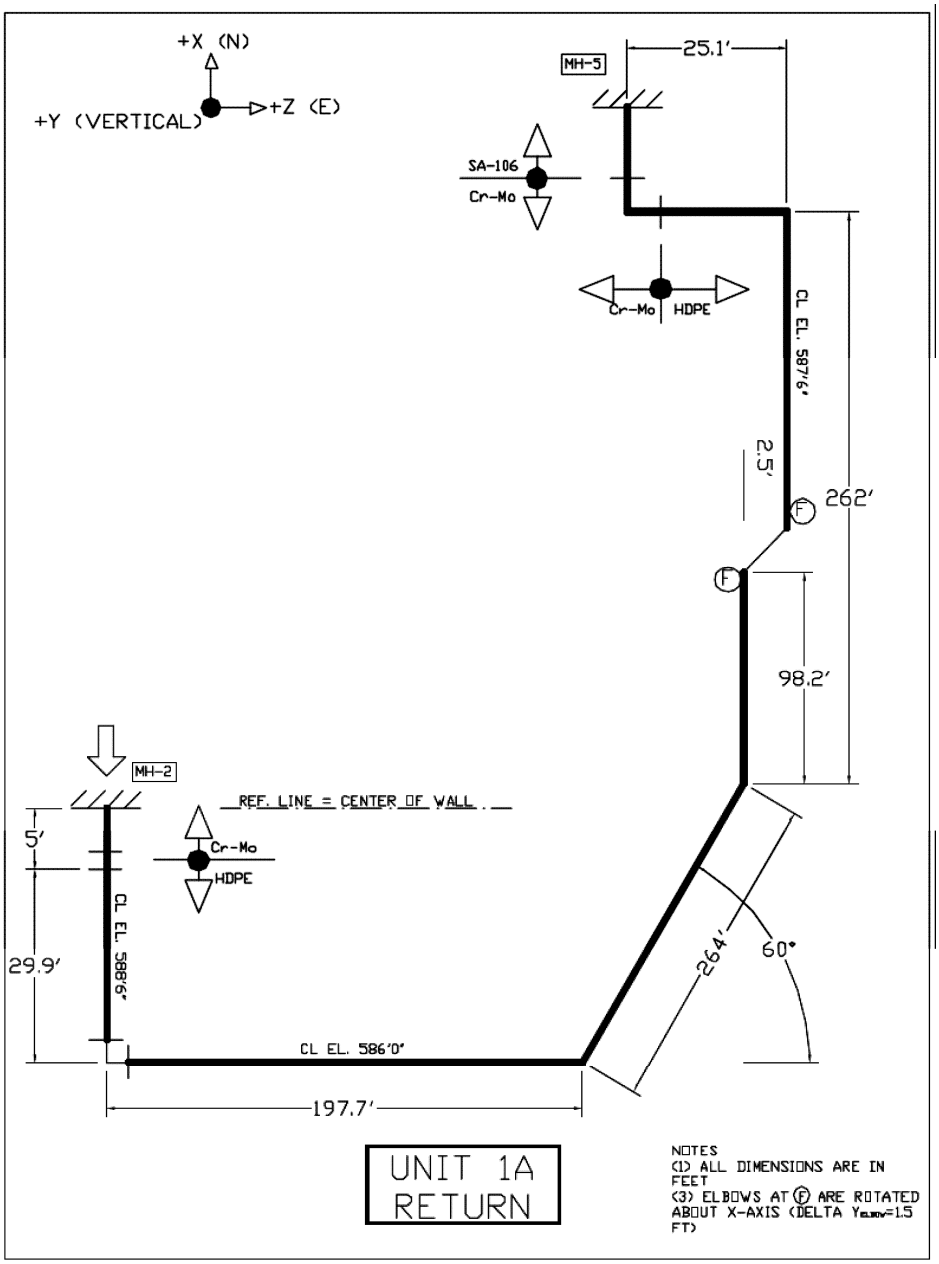

Fig. 6.9

6.10 Pipe Criteria – Steel and HDPE

The pipe load combinations considered and shown in Table 6.10(a) – Steel

Table 6.10(a) Buried Steel Piping Load Combinations

Service Level	Stress Condition	Load Combination
Design	Primary	P
	Primary	P + DW
A	Primary	P_a
	Primary - - Longitudinal Stress	P_a + DW
	Secondary	Range of ($T_{a\ min}$, $T_{a\ max}$)
	Non Repeated Anchor Motion	BS
B	Primary	P_b
	Primary	P_{bs}
	Primary - - Longitudinal Stress	P_b + DW + VOT P_b + DW+PS
	Secondary – Thermal and Seismic	(a) Range of ($T_{b\ min}$, $T_{b\ max}$) (b) $\lvert T_b\ max \rvert + \lvert [OBE_W^2 + (\lvert OBE_S \rvert + \lvert OBE_D \rvert)^2]^{1/2} \rvert$ (c) $\lvert T_b\ min \rvert + \lvert [OBE_W^2 + (\lvert OBE_S \rvert + \lvert OBE_D \rvert)^2]^{1/2} \rvert$
C	Primary	P_c
D	Primary	P_d
	Secondary - Seismic	$[SSE_W^2 + (\lvert SSE_S \rvert + \lvert SSE_D \rvert)^2]^{1/2}$

The pipe load combinations considered and shown in Table 6.10(b) – HDPE

Table 6.10(b)- Buried HDPE Piping Load Combinations

Service Level	Stress Condition	Load Combination
Design		P
		P + DW
A	Primary - Side Wall Compression	$P_E + P_L$
	Primary - Buckling due to External Pressure	$P_E+P_L+P_{gw}$
	Primary -- Flotation	W_W
	Primary -- Pressure	P_a
	Primary - - Longitudinal Stress	P_a + DW
	Secondary	Range of ($T_{a\,min}$, $T_{a\,max}$)
	Non Repeated Anchor Motion	BS
B	Primary - Side Wall Compression	$P_E + P_L$
	Primary - Buckling due to External Pressure	$P_E+P_L+P_{gw}$
	Primary -- Flotation	W_W
	Primary -- Pressure	P_b
	Primary -- Pressure + Surge Pressure	$P_b + P_{bs}$
	Primary - - Longitudinal Stress	P_b + DW
	Primary -- Pressure + Longitudinal Stress + Short Term	P_b + DW + VOT P_b + DW +PS
	Secondary -- Thermal	Range of ($T_{b\,min}$, $T_{b\,max}$)
	Secondary -- Seismic	$[OBE_W^2 + (\lvert OBE_S \rvert + \lvert OBE_D \rvert)^2]^{1/2}$
C	Primary -- Side Wall Compression	$P_E + P_L$
	Primary -- Buckling due to External Pressure	$P_E+P_L+P_{gw}$
	Primary -- Flotation	W_W
	Primary -- Pressure	P_c
	Primary -- Pressure + Surge Pressure	$P_c + P_{cs}$
	Secondary -- Thermal	Range of ($T_{c\,min}$, $T_{c\,max}$)
D	Primary -- Side Wall Compression	$P_E + P_L$
	Primary -- Buckling due to External Pressure	$P_E+P_L+P_{gw}$
	Primary -- Flotation	W_W
	Primary -- Pressure	P_d
	Primary -- Pressure + Surge Pressure	$P_d + P_{ds}$
	Secondary -- Thermal	Range of ($T_{d\,min}$, $T_{d\,max}$)
	Secondary -- Seismic	$[SSE_W^2 + (\lvert SSE_S \rvert + \lvert SSE_D \rvert)^2]^{1/2}$

6.11 Acceptance Criteria – Steel and HDPE

The criteria used to evaluate the adequacy of the buried steel piping system are summarized in Table 6.11(a).

Table 6.11(a) - Buried Steel Piping Capacity Criteria

Service Level	Stress Condition	Capacity Criteria
Design	Primary	Requirements of ND-3640
	Primary	ND-3652, Equation (8) with a Stress Limit of 1.5 S_h
A	Primary	Less than 1.0 P
	Primary - - Longitudinal Stress	ND-3653.1, Equation (9) with a stress limit of Lesser of 1.8 S_h or 1.5 S_y
	Secondary	ND-3653.2(a), Equation (10) with a stress limit of S_A
	Non Repeated Anchor Motion	ND-3653.2(b), Equation (10a) with a stress limit of 3.0 S_c
B	Primary	Less than 1.1 P
	Primary - - Longitudinal Stress	ND-3653.1, Equation (9) with a stress limit of Lesser of 1.8 S_h or 1.5 S_y
	Secondary – Thermal and Seismic	ND-3653.2(a), Equation (10) with a stress limit of S_A
C	Primary	Less than 1.8 P
D	Primary	Less than 2.0 P
	Secondary - Seismic	ND-3653.2(a), Equation (10) with a stress limit of S_A

The criteria used to evaluate the adequacy of the buried HDPE piping system are summarized in Table 6.11(b).

Table 6-11(b) - Buried HDPE Capacity Criteria

Service Level	Stress Condition	Capacity Criteria
Design		Requirements of N755-3131.1
		Requirements of N755-3223.1 with k=1.0
A	Primary – Side Wall Compression	500 psi (N755-3220)
	Primary – Buckling due to External Pressure	Requirements of N755-3221.1
	Primary – Flotation	W_P+[P_E*(DW/12)]
	Primary	Less than 1.0 * P
	Primary – Longitudinal Stress	Requirements of N755-3223.1 with k=1.0
	Secondary – Thermal	1100 psi (N755-3311.3)
	Non Repeated Anchor Motion	2*S (N755-3312)
B	Primary – Side Wall Compression	500 psi (N755-3220)
	Primary – Buckling due to External Pressure	Requirements of N755-3221.1
	Primary – Flotation	W_P+[P_E*(DW/12)]
	Primary – Pressure	Less than 1.1 * P
	Primary – Pressure + Surge Pressure	1.5 * P
	Primary – Longitudinal Stress	Requirements of N755-3223.1 with k=1.1
	Primary – Pressure + Longitudinal Stress + Short Duration	Requirements of N755-3223.2 or 0.4*Material tensile strength at yield
	Secondary – Thermal	1100 psi (N755-3311.3)
	Secondary – Seismic	1100 psi (N755-3410)
C	Primary –Side Wall Compression	500 psi (N755-3220)
	Primary – Buckling due to External Pressure	Requirements of N755-3221.1
	Primary – Flotation	W_P+[P_E*(DW/12)]
	Primary – Pressure	Less than 1.33 * P
	Primary – Pressure + Surge Pressure	2.0 * P
	Secondary – Thermal	1100 psi (N755-3311.3)
D	Primary – Side Wall Compression	500 psi (N755-3220)
	Primary – Buckling due to External Pressure	Requirements of N755-3221.1
	Primary – Flotation	W_P+[P_E*(DW/12)]
	Primary – Pressure	Less than 1.33 * P
	Primary – Pressure + Surge Pressure	2.0 * P
	Secondary –Thermal	1100 psi (N755-3311.3)
	Secondary – Seismic	1100 psi (N755-3410)

7.0 ANALYSIS

The analysis of the piping system is done per the Piping Design Specification Ref. [26] using analysis methods consistent with the Relief Request, Ref. [14], and the ASME BPVC Code Case N-755 Ref. [12] as outlined in Section 5.2 of this calculation. The calculations presented in Section 5.2.1 are dependent only on design conditions and pipe size. For the calculations described in Section 5.2.2, the loads acting on the piping system (due to pressure, deadweight, thermal, seismic, etc.) for the various service levels are required. These loads are determined using the ADLPIPE computer program.

7.1 Computer Model

The run starts at the DG building wall of Unit 1 (Node Pt. = 100) and ends at the centerline of the 42-in Return Header 'A' (Node Pt. = 5600). The piping system is considered anchored at each end.

A steel flange is welded to a 10-in pipe coming out of the DG building wall. A 10x12 steel reducer, with flanges on both ends, is attached to the 10-in pipe coming out of the DG building wall. A flanged joint is created (Node Pt. 130) between the steel reducer and the HDPE pipe by fusing an HDPE flange adapter, with a steel backup ring mounted on it, to the end of the HDPE pipe. The steel backup ring and the flange on the reducer have the same bolt pattern

A 12-in steel pipe, with a flange on one end, is welded to the 42-in header pipe. An additional 12-in steel pipe with flanges welded to its ends extends to Node Pt. 5490. A flanged joint between the steel pipe and the HDPE pipe (Node Pt. 5490) is created by fusing an HDPE flange adapter, with a steel backup ring mounted on it, to the end of the HDPE pipe. The steel backup ring and the flange on the 12-in pipe piece have the same bolt pattern

Various mitered elbows are used as the HDPE pipe is routed from Node Pt. 130 at El. 588'-6" to Node Pt. 5490 at El. 587'-6".

Details of the piping dimensions and routing are found in Refs. [5], [6], and [7]. The isometric sketch of the piping system is attached in Appendix A. The ADLPIPE computer model for the piping system was created using the inputs listed in Section 6 of this calculation. Soil springs were generally applied at 2 ft intervals around elbows and at 10 ft intervals in the remaining section of the piping. A complete listing of the ADLPIPE model (input file) and analysis results (output file) are attached in Appendix B.

7.2 Results of ADLPIPE Analysis

7.2.1 Load Cases Analyzed

Steel and HDPE pipe load cases as well as load combinations analyzed using the ADLPIPE piping analysis program are shown in Tables 7.2.1a and 7.2.1b. Thermal cases are required for Level A, B, C, and D because of the time dependence of the elastic modulus for HDPE pipe. The following durations were used for each service level:

Service Level A: 50 Years Ref. [14] E_c = 28,000 psi E_h = 12,000 psi
Service Level B: 10 Years Ref. [14] E_c = 32,000 psi E_h = 13,000 psi
Service Level C: 1000 Hrs Ref. [14] E_c = 44,000 psi E_h = 18,000 psi
Service Level D: 1000 Hrs Ref. [14] E_c = 44,000 psi E_h = 18,000 psi

Load Type	Load Case
Deadweight + Pressure	10
Level A Thermal at Minimum Temperature, T_{min} = 32° F (ΔT = -23° F)	21
Level A Thermal at Maximum Temperature, T_{max} = 140° F (ΔT = 85° F)	22
Level B Thermal at Minimum Temperature, T_{min} = 32° F (ΔT = -23° F)	23
Level B Thermal at Maximum Temperature, T_{max} = 140° F (ΔT = 85° F)	24
Level C/D Thermal at Minimum Temperature, T_{min} = 32° F (ΔT = -23° F)	25
Level C/D Thermal at Maximum Temperature, T_{max} = 140° F (ΔT = 85° F)	26
Thermal at T = 65° F (ΔT = 10° F)[1]	30

[1] This is a pseudo-seismic case. ΔT is the equivalent temperature rise for computing the seismic loads on the piping system.

Load Type	Load Case
Level A : Absolute Range of Load Cases 21 and 22	27
Level B : Absolute Range of Load Cases 23 and 24	28
Level C/D : Absolute Range of Load Cases 25 and 26	29
Level D : Absolute Range of Load Case 30 (SSE)	31
Level B : Load Case 31 / 1.875 (OBE) [(1)]	32
Level B: Absolute Thermal Max (L.C. 24) + OBE Seismic (L.C. 32)	40
Level B: Absolute Thermal Min (L.C. 23) + OBE Seismic (L.C. 32)	41
Level B: Max of Load Case 28, 40 and 41	45

[(1)] Per page 94 of Ref. [16], OBE = SSE/1.875.

7.2.2 Summary of HDPE Loads at Critical Locations

The loads acting at the critical locations on the HDPE pipe (i.e., where the maximum stresses occur) for Service Levels A, B, C and D are extracted from the results of the ADLPIPE analysis. These loads are summarized in Tables 7.2.2a to 7.2.2d and will be used for computing pipe stresses as described in Section 5 of this calculation.

Service Level A

Load Case	Straight Pipe				Mitered Elbow			
	F [lb]	Node No.	**M** [ft-lb]	Node No.	**F** [lb]	Node No.	**M** [ft-lb]	Node No.
10	0	695/805	489	695/805	155	220	117	220

Load Case	Straight Pipe				Mitered Elbow			
	Force [lb]	Node No.	Moment [ft-lb]	Node No.	Force [lb][1]	Node No.	Moment [ft-lb]	Node No.
27 (Level A)	5991	5490	355	5490	3778	870	1208	870
28 (Level B)	6572	5490	402	5490	4161	870	1354	870
29 (Level C/D)	8820	5490	615	5490	5662	870	1941	870

[1] Values shown here were obtained from the SRSS of forces acting on the mitered elbow. Using these values for axial force is therefore conservative.

Service Level B

Load Case	Straight Pipe				Mitered Elbow			
	F [lb]	Node No.	**M** [ft-lb]	Node No.	**F** [lb][1]	Node No.	**M** [ft-lb]	Node No.
32 (OBE)	2324	5000	683	5000	2406	870	1096	870

[1] Values shown here were obtained from the SRSS of forces acting on the mitered elbow. Using these values for axial force is therefore conservative.

Service Level D

Load Case	Straight Pipe				Mitered Elbow			
	F [lb]	Node No.	**M** [ft-lb]	Node No.	**F** [lb][1]	Node No.	**M** [ft-lb]	Node No.
31 (SSE)	4358	5000	1281	5000	4511	870	2054	870

[1] Values shown here were obtained from the SRSS of forces acting on the mitered elbow. Using these values for axial force is therefore conservative.

7.3 Calculations per ASME BPVC Code Case N-755

The HDPE piping system was analyzed per the Design Specification Ref. [26] which is consistent with Relief Request 06-CN-003 Ref. 14], and the ASME BPVC Code Case N-755 Ref. [12], as described in Sections 5.2.1 and 5.2.2, of this calculation. The manual calculations were performed using MathCad. The design conditions and the maximum loads obtained from ADLPIPE analysis (as listed in Tables 7.2.2a to 7.2.2d) were used to qualify the HDPE piping based on the applicable criteria for the design load cases. The manual calculations are provided below.

Manual Calculations Per ASME BPVC Code Case N-755:

Define Variables:

$S := 430 \cdot \frac{lb}{in^2}$ — Allowable stress at 140º F

$E_{pipe50y} := 12000 \cdot \frac{lb}{in^2}$ — Elastic modulus at 140º F for 50 yr load duration

$E_{pipe10h} := 50000 \cdot \frac{lb}{in^2}$ — Elastic modulus at 140º F for short term load duration

$E' := 2000 \cdot \frac{lb}{in^2}$ — Modulus for fine grain sand compacted to > 95%

$W_p := 18.4 \frac{lb}{ft}$ — Weight of empty pipe per foot

$\gamma_w := 62.4 \frac{lb}{ft^3}$ — Specific weight of water

$P := 60 \frac{lb}{in^2}$ — Design pressure, psig

$\gamma_{soil} := 105 \cdot \frac{lb}{ft^3}$ — Specific weight of dry soil

$L := 1.5$ — Deflection lag factor

$K_{bed} := 0.1$ — Bedding factor

$D := 12.75 \cdot in$ — Outside diameter of pipe

$t = 1.159 \cdot in$ — Minimum wall thickness for DR-11 pipe, Ref. [12]

$t = 1.417 \cdot in$ — Minimum wall thickness for DR-9 pipe, Ref. [12]

$DR = \frac{D}{t}$ — Dimensional ratio (DR = 11 for straight pipe and DR = 9 for mitered elbows)

$c := 0.0in$ — Allowance for mechanical and erosion damage

Section 3131.1 - Minimum Required Wall Thickness

Calculate the pressure design thickness, t_{min}:

$$t_{min} := \frac{P \cdot D}{(2 \cdot S + P)} \qquad t_{min} = 0.83\text{in}$$

Determine the minimum required wall thickness, t_{design}:

$$t_{design} := t_{min} + c \qquad t_{design} = 0.83\text{in}$$

Pipe wall thickness (DR 11), t = 1.159 in > 0.83 in.....**O.K.**

Pipe wall thickness (DR 9), t = 1.417 in > 0.83 in.....**O.K.**

Note that DR-11 governs. Therefore, for subsequent calculations, only DR-11 needs to be considered; that is::

$$DR := 11$$

Section 3210 - Ring Deflection

Determine the vertical soil pressure (P_L) due to surcharge loads.

Per Drawing No. CN-1038-03 [Ref. 5], the Transporter Haul Path crosses over the HDPE pipe lines of Unit 1. The Haul Path is at EL. 594'-0" and the pipe centerline is at EL. 586'-0". Hence, the soil depth from surface to top of pipe = 7.5 ft.

$$H := 7.5\text{ft}$$

As shown on page 21 of 79 of Ref. [13], the maximum vertical soil pressure (P_V) due to the combined weight of the transporter and cask at 7.5 feet below surface, not including impact, is:

$$P_V := 11.40\frac{\text{lb}}{\text{in}^2}$$

This soil pressure value was obtained based on a cask weight of 310 kip and transporter weight of 170 kip. Per Sheet 25 of EC./VN No. CD500920D (DOC. ID. 32-5053646-01 Rev. 1) dated 2-20-07, the cask weight is 314.6 kip, which is 1.5% greater than the original value used in computing soil pressure. Therefore, in this calculation, the vertical soil pressure value will be increased by 1.5%; that is:

$$P_V := 1.015 \cdot P_V \qquad P_V = 11.571\frac{\text{lb}}{\text{in}^2}$$

Per Ref. [13], the impact load factor (F) due to the cask dropping from a maximum height of 8.0 inches is:

$$F := 3.033$$

The maximum vertical soil pressure due to surcharge loads, including impact, is computed by applying the impact load factor to the combined weight of the transporter and cask. This is conservative since the impact load factor actually applies to the cask weight only. Therefore:

$$P_L := F \cdot P_v \qquad P_L = 35.09 \frac{lb}{in^2}$$

Calculate the vertical soil pressure due to earth loads. Note that there is no water above pipe; hence, dry soil is the only source of pressure.

$$P_E := \gamma_{soil} \cdot H \qquad P_E = 5.47 \frac{lb}{in^2}$$

Compute the ring deflection Ω by letting Soil Support Factor, $F_s = 0$. Note that as shown in Table 3210-2 of Ref. [12], the value of F_s depends on properties of the trench and native soil, and on pipe diameter and trench width. Using zero for Fs (see equation below) will yield a conservative value for Ω.

$$F_s := 0$$

Compute the ring deflection Ω .

$$\Omega_1 := \frac{K_{bed} \cdot L \cdot P_E}{\frac{2 \cdot E_{pipe50y}}{3} \cdot \left(\frac{1}{DR - 1}\right) + 0.061 \cdot F_s \cdot E'} \qquad \Omega_1 = 1.03 \times 10^{-3}$$

$$\Omega_2 := \frac{K_{bed} \cdot P_L}{\frac{2 \cdot E_{pipe10h}}{3} \cdot \left(\frac{1}{DR - 1}\right) + 0.061 \cdot F_s \cdot E'} \qquad \Omega_2 = 1.05 \times 10^{-3}$$

Note that the equation given in Ref. [12] for computing Ω includes a conversion factor of 144. Since MathCad automatically converts units, this conversion factor is not included in the above equation.

$\Omega := \Omega_1 + \Omega_2$ $\qquad$ $\Omega = 2.08 \times 10^{-3}$

The maximum allowable ring deflection (Ωmax)is given in Ref. [12] as percent of the original diameter.
Per Table 3210-1 of Ref. [12], for DR = 11:

$\Omega max = 5\% = 0.05 > \Omega = 2.08 \times 10^{-3}$ .....**O.K.**

<u>Section 3220 - Compression of Sidewalls</u>

Calculate the circumferential compressive stress (σ_{sw}) in the sidewalls of pipe and miters.

$$\sigma_{sw} := \frac{(P_E + P_L) \cdot DR}{2} \qquad \sigma_{sw} = 223.1 \frac{lb}{in^2}$$

Note that the equation given in Ref. [12] for computing σ_{sw} includes a conversion factor of 144.
Since MathCad automatically converts units, the conversion factor is omitted here.

Compare σ_{sw} to the allowable stress value of 500 psi:

$\sigma_{sw} = 223.1 \frac{lb}{in^2} < 500$ psi .....**O.K.**

Section 3221.1 - Buckling Due to External Pressure

Check that external pressure from ground water (Pgw), earth loads (P_E) and surcharge loads (P_L) does not cause the pipe to buckle.

$$Phydro = \left(Pgw + P_E + P_L\right) \le 2.8 \cdot \left[R_b \cdot B \cdot E' \cdot \frac{E_{pipe50y}}{12 \cdot (DR - 1)^3} \right]^{0.5}$$

Note that the equation provided in Ref. [12] for computing the external buckling pressure includes a conversion factor of 144. The conversion factor is not needed here since MathCad automatically converts units.

There is no water above the pipe. Hence:

$H_{gw} := 0ft$ $\qquad$ $P_{gw} := 0 \frac{lb}{in^2}$

$R_b := 1 - 0.33 \frac{H_{gw}}{H}$ $\qquad$ $R_b = 1$

Compute the burial factor, B. Note that for computing burial factor, height of soil above pipe (H) needs to be redefined as a quantity H_B with no units.

$H_B := 7.5$

$B := \frac{1}{1 + 4 \cdot \exp\left(-0.065 \cdot H_B\right)}$ $\qquad$ $B = 0.289$

$P_{gw} + P_E + P_L = 40.6 \frac{lb}{in^2}$

$$2.8 \cdot \left[R_b \cdot B \cdot E' \cdot \frac{E_{pipe50y}}{12 \cdot (DR - 1)^3} \right]^{0.5} = 67.4 \frac{lb}{in^2}$$

($P_{gw} + P_E + P_L$) is less than 67.4 lb/in^2.....**O.K.**

Section 3221.2 - Effects of Negative Internal Pressure

$$\Delta P \le \frac{f_o}{2} \cdot \frac{2 \cdot Epipe10h}{\left(1 - \nu^2\right)} \cdot \left(\frac{1}{DR - 1}\right)^3$$

$f_o := 0.64$ Ovality correction factor per Table 3221.2-1 for 5% ovality

$\nu := 0.35$ Use short-term values for elastic modulus and Poisson ratio

$$\frac{f_o}{2} \cdot \frac{2 \cdot E_{pipe10h}}{\left(1 - \nu^2\right)} \cdot \left(\frac{1}{DR - 1}\right)^3 = 36.5 \frac{lb}{in^2}$$

Therefore, ΔP may not exceed 36.5 psi.

Section 3222 - Flotation

For floatation, the minimum height of soil above top of pipe (H = 5ft) should be used to calculate the vertical earth load P_E . Therefore, compute the vertical earth load based on H = 5ft.

$H := 5ft$

$P_E := \gamma_{soil} \cdot H$ $\qquad P_E = 3.65 \frac{lb}{in^2}$

$W_w < W_p + P_E \cdot D$ The equation given in Ref.[12] includes a conversion factor of 12. Mathcad automatically converts units; therefore, the conversion factor is not needed here.

$W_w := \frac{\pi \cdot D^2}{4} \cdot \gamma_w$ W_w is the unit weight of the water displaced by the pipe

$W_w = 55.3 \frac{lb}{ft}$

$W_p + P_E \cdot D = 576.2 \frac{lb}{ft}$

W_w is less than $W_p + P_E \cdot D$ .....**O.K.**

Calculation of Stresses Per ASME BPVC Code Case N-755 [Ref. 12]

Define Variables:

$Pa := 60 \cdot \frac{lb}{in^2}$ — Design or Service Level A, B, C, or D pressure

$D := 12.75 \cdot in$ — Outside diameter of pipe and mitered elbow

Properties of Straight Pipe — Straight pipe is DR-11

$D_i := 10.432 \cdot in$ — Inside Diameter of straight pipe, per Ref. [12]

$t := 1.159 \cdot in$ — Wall thickness of straight pipe, per Ref. [12]

$A := \frac{\pi}{4} \cdot \left(D^2 - D_i^2\right)$ $\quad A = 42.2in^2$ — Cross sectional area of straight pipe

$Z := \left(\frac{\pi}{32}\right) \cdot \frac{D^4 - D_i^4}{D}$ $\quad Z = 112.3in^3$ — Section modulus of straight pipe

$i := 1.0$ — Stress Intensification Factor of straight pipe (per Table 3311.2-1)

$B_1 := 0.5$ $\quad B_2 := 1.0$ — Stress Indices of straight pipe (per Table 3223-1)

Properties of Mitered Elbow — Elbow is DR-9

$D_{ie} := 9.916 \cdot in$ — Inside Diameter of elbow, per Ref. [12]

$t_e := 1.417 \cdot in$ — Wall thickness of elbow, per Ref. [12]

$A_e := \frac{\pi}{4} \cdot \left(D^2 - D_{ie}^2\right)$ $\quad A_e = 50.5in^2$ — Cross sectional area of elbow

$Z_e := \left(\frac{\pi}{32}\right) \cdot \frac{D^4 - D_{ie}^4}{D}$ $\quad Z_e = 129.0in^3$ — Section modulus of elbow

$i_e := 2.0$ — Stress Intensification Factor of elbow (per Table 3311.2-1)

$B_{1e} := 0.69$ $\quad B_{2e} := 1.64$ — Stress Indices of elbow (per Table 3223-1)

The design/operating temperature is 140 degrees F. The design pressure for the outlet line is 60 psig. The Level A, B, C, and D operating pressure for the outlet line is 25 psig. The maximum deadweight and presure loads (Load Case 10) are obtained from the ADLPIPE analysis and listed in Section 7.3 of this calculation. Qualification of the HDPE pipe is based on design level factors and allowable stress using the design temperature and pressure. Design pressue envelopes Service Levels A, B, C, and D pressures.

3223.1 - Longitudinal Stress Design

$S := 430 \cdot \frac{lb}{in^2}$ — Allowable stress at 140 degrees F (per Table 3131-1)

$k := 1.0$ — Longitudinal Stress Factor for Design (per Table 3223-2)

$k \cdot S = 430 \frac{lb}{in^2}$

Straight Piping Section: — Straight pipe is DR-11

$$B_1 \cdot \frac{P_a \cdot D}{2 \cdot t} + 2 \cdot B_1 \cdot \frac{F_a}{A} + B_2 \cdot \frac{M}{Z} \le k \cdot S$$

$F_a := 0 \cdot lb$ — Axial force due to deadweight on the straight pipe

$M := 489 \cdot lb \cdot ft$ — Resultant bending moment due to deadweight on the straight pipe

$$B_1 \cdot \frac{Pa \cdot D}{2 \cdot t} + 2 \cdot B_1 \cdot \frac{F_a}{A} + B_2 \cdot \frac{M}{Z} = 217.3 \frac{lb}{in^2} \quad < \quad k \,.\, S = 430 \frac{lb}{in^2}$$ .....**OK**

Mitered Elbow: — Elbow is DR-9

$$B_{1e} \cdot \frac{P_a \cdot D}{2 \cdot t_e} + 2 \cdot B_{1e} \cdot \frac{F_{ae}}{A_e} + B_{2e} \cdot \frac{M_e}{Z_e} \le k \cdot S$$

$F_{ae} := 155 \cdot lb$ — Axial force due to deadweight on the mitered elbow

$M_e := 117 \cdot lb \cdot ft$ — Resultant bending moment due to deadweight on the mitered elbow

$$B_{1e} \cdot \frac{Pa \cdot D}{2 \cdot t_e} + 2 \cdot B_{1e} \cdot \frac{F_{ae}}{A_e} + B_{2e} \cdot \frac{M_e}{Z_e} = 208.3 \frac{lb}{in^2} \quad < \quad k \,.\, S = 430 \frac{lb}{in^2}$$ .....**OK**

3311 - Design for Thermal Expansion and Contraction

Soil springs were applied to account for the soil stiffness. Therefore, the alternative method of 3311.3 is used: The maximum thermal range force and moment were used to check the stresses in the HDPE pipe. The thermal range of Service Level C/D envelopes Service Level A and B.

Straight Piping Section: Straight pipe is DR-11

$$i \cdot \frac{M_c}{Z} + \frac{F_{ac}}{A} \le 1100 \cdot \frac{lb}{in^2}$$

$F_{ac} := 8820 \cdot lb$ Axial force range due to thermal expansion and/or contraction on the straight pipe (Level C/D)

$M_c := 615 \cdot ft \cdot lb$ Resultant moment range due to thermal expansion and/or contraction on the straight pipe (Level C/D)

$$i \cdot \frac{M_c}{Z} + \frac{F_{ac}}{A} = 274.7 \frac{lb}{in^2} \quad < 1100 \frac{lb}{in^2}$$ .....**OK**

Mitered Elbow: Elbow is DR-9

$$i_e \cdot \frac{M_{ce}}{Z_e} + \frac{F_{ace}}{A_e} \le 1100 \cdot \frac{lb}{in^2}$$

$F_{ace} := 5662 \cdot lb$ Axial force range due to thermal expansion and/or contraction on the mitered elbow (Level C/D)

$M_{ce} := 1941 \cdot ft \cdot lb$ Resultant moment range due to thermal expansion and/or contraction on the mitered elbow (Level C/D)

$$i_e \cdot \frac{M_{ce}}{Z_e} + \frac{F_{ace}}{A_e} = 473.2 \frac{lb}{in^2} \quad < 1100 \frac{lb}{in^2}$$ .....**OK**

3312 - Nonrepeated Anchor Movements

There are no nonrepeated (thermal) anchor movements .

3410 - Seismic Induced Stresses

This is applicable for both SSE and OBE loads. These stresses are based on evaluation of the SSE (Level D) conditions which also qualifies the piping for OBE (Level B) conditions as OBE loads are lower and OBE and SSE limits are the same

Straight Piping Section: Straight pipe is DR-11

$$i \cdot \frac{M_E}{Z} + \frac{F_{aE}}{A} \le 1100 \cdot \frac{lb}{in^2}$$

$F_{aE} := 4358 \cdot lb$ Axial force range due to seismic loads on the straight pipe

$M_E := 1281 \cdot ft \cdot lb$ Resultant moment range due to seismic loads on the straight pipe

$$i \cdot \frac{M_E}{Z} + \frac{F_{aE}}{A} = 240.2 \frac{lb}{in^2} < 1100 \frac{lb}{in^2}$$ .....**OK**

Mitered Elbow: Mitered elbow is DR-9

$$i_e \cdot \frac{M_{Ee}}{Z_e} + \frac{F_{aEe}}{A_e} \le 1100 \cdot \frac{lb}{in^2}$$

$F_{aEe} := 4511 \cdot lb$ Axial force range due to seismic loads on the mitered elbow

$M_{Ee} := 2054 \cdot ft \cdot lb$ Resultant moment range due to seismic loads on the mitered elbow

$$i_e \cdot \frac{M_{Ee}}{Z_e} + \frac{F_{aEe}}{A_e} = 471.4 \frac{lb}{in^2} < 1100 \frac{lb}{in^2}$$ .....**OK**

7.4 Stress Summary for Unit 1 Steel Pipe

Acceptance Criteria	Calculated Stress (psi)	Allowable Stress (psi)	Calculated / Allowable	Node Point
Equation 8 (Design)	1277	22500	0.06	5560
Equation 9 (Level A)	542	27000	0.02	5560
Equation 9 (Level B)	542	27000	0.02	5560
Equation 10 (Level A)	6587	22500	0.29	5560
Equation 10 (Level B)	7519	22500	0.33	5560
Equation 10 (Level D)	6304	22500	0.28	5560

7.5 Flange Summary for Unit 1 HDPE Pipe

The EPRI flange capacity tests, Ref. [22], demonstrated that if the pipe stresses at the fusion joint joining the HDPE flange adapter to the piping were less than the maximum code capacities, the flanges were adequate. For this system, all pipe stresses at the fusion joint, joining the HDPE flange adapter to the piping are less than the maximum permitted code capacities.

8.0 RESULTS

The HDPE piping system was found to be adequate. Table 8.a summarizes these results.

Table 8.a
Result Summary for 12" HDPE Pipe

Acceptance Criteria	Calculated Value	Allowable Value	Calculated / Allowable	Node Pt.
Minimum Required Wall Thickness	0.83"	1.159"	0.72	N/A
Ring Deflection	0.00208"	0.05"	0.04	N/A
Compression of Side Walls	223.1psi	500 psi	0.45	N/A
Buckling Due to External Pressure	40.6 lb/in^2	67.4 lb/in^2	0.60	N/A
Effects of Negative Internal Pressure	> - 36.5 psi	0 psi	***0.0	N/A
Flotation	55.3 lb/ft	576 lb/ft	0.10	N/A
Deadweight + Pressure Stress – Straight Pipe	217.3 psi	430 psi	0.51	695/805
Deadweight + Pressure Stress – Mitered Elbow	208.3 psi	430 psi	0.48	220
Thermal Stress – Straight Pipe	274.7 psi	1100 psi	0.25	5490
Thermal Stress – Mitered Elbow	473.2 psi	1100 psi	0.43	870
Seismic SSE Stress – Straight Pipe	240.2 psi	1100 psi	0.22	5000
Seismic SSE Stress – Mitered Elbow	471.4 psi	1100 psi	0.43	870

*** The HDPE pipe is not under a vacuum per the Design Specification Ref. [26]

The steel piping system was found to be adequate. Table 8.b summarizes these results

Table 8.b
Result Summary for 10" and 12" Steel Pipe

Acceptance Criteria	Calculated Stress [psi]	Allowable Stress [psi]	Calculated / Allowable	Node Point
Deadweight and Pressure (Design)	1277	22500	0.06	5560
Deadweight and Pressure (Level A)	542	27000	0.02	5560
Thermal (Level A)	6587	22500	0.29	5560
Deadweight and Pressure (Level B)	542	27000	0.02	5560
Thermal and Seismic (Level B)	7519	22500	0.33	5560
Seismic (Level C/D)	6304	22500	0.28	5560

8.1 Functionality Capability and Break Postulation

This piping analysis meets functional capability as defined in Ref. [24]. The maximum Level D Pressure and Temperature do not exceed design Pressure and Temperature. All piping stress limits given in ASME BPVC Code Case N-755 are met for all applied Level D loads and the capacities used in this review are based on the Design Temperature.

This piping is classified as moderate energy as defined in Ref. [24]. Moderate energy piping is piping that has a temperature of less than 200 º F and a pressure of 275 psig or less. Per Ref [26], for this piping, the maximum temperature is 140º F and the operating pressure is 25 psig. Leak cracks are to be postulated at points based on the following equation:

$$\frac{PD}{4t} + 0.75i\left[\frac{M_A}{Z} + \frac{F_{aA}}{A}\right] + i\left[\frac{M_C}{Z} + \frac{F_{aC}}{A}\right] + i\left[\frac{M_E}{Z} + \frac{F_{aE}}{A}\right] \le 0.4(1.1S + 1100 + 1100)psi = 0.4(1.1S + 2200)psi$$

where:

P = Operating pressure
D = Outside pipe diameter
t = Nominal pipe wall thickness

i = Stress intensification factor
A = Cross sectional area of pipe
Z = Section modulus of pipe
F_{aA} = Axial force due to deadweight loads
F_{aC} = Axial force range due to thermal loads
F_{aE} = Axial force range due to seismic loads
M_A = Moment due to deadweight loads
M_C = Moment range due to thermal loads
M_E = Moment range due to seismic loads

The deadweight, thermal, and seismic loads at the critical locations will be taken from Tables 7.2.2a to 7.2.2d for straight pipe and mitered elbows and checked to the postulated break equation. The maximum stresses for deadweight, seismic and thermal cases may occur at different locations. The equation uses the maximum stresses even when they are found in separate locations. This is conservative.

S = 430 psi → 0.4(1.1S + 2200) = 0.4 (1.1*430 + 2200) = 1069 psi

<u>For straight pipe</u>:

D = 12.75 in t = 1.159 in A = 42.2 in^2 Z = 112.3 in^3
P = 25 psi i = 1.0 0.75i = 1.0 (Note: 0.75i cannot be less than 1.0)
M_A = 489 ft-lb = 5868 in-lb M_C = 615 ft-lb = 7380 in-lb M_E = 1281 ft-lb = 15372 in-lb
F_{aA} = 0 F_{aC} = 8820 lb F_{aE} = 4358 lb

Substituting these values into the equation yields:

$$\frac{25*12.75}{4*1.159}+1.0\left[\frac{5868}{112.3}+\frac{0}{42.2}\right]+1.0\left[\frac{7380}{112.3}+\frac{8820}{42.2}\right]+1.0\left[\frac{15372}{112.3}+\frac{4358}{42.2}\right]=636psi<1069psi$$

Therefore, there are no postulated moderate energy leak cracks on the straight HDPE piping.

<u>For mitered elbows</u>:

D = 12.75 in t = 1.417 in A = 50.5 in^2 Z = 129.0 in^3
P = 25 psi i = 2.0 0.75i = 1.5
M_A = 117 ft-lb = 1404 in-lb M_C = 1941 ft-lb = 23292 in-lb M_E = 2054 ft-lb = 24648 in-lb
F_{aA} =155 lb F_{aC} = 5662 lb F_{aE} = 4511 lb

Substituting these values into the equation yields:

$$\frac{25*12.75}{4*1.417}+1.5\left[\frac{1404}{129}+\frac{155}{50.5}\right]+2.0\left[\frac{23292}{129}+\frac{5662}{50.5}\right]+2.0\left[\frac{24648}{129}+\frac{4511}{50.5}\right]=1223psi>1069psi$$

The thermal and seismic loads used in the above calculation occur at the 30° mitered elbow (Node Point 870). Therefore, moderate energy leak cracks are postulated on the 30° mitered elbow.

From the ADLPIPE analysis results, the second most stressed mitered elbow is the 45° mitered elbow at Node Points 5190/5195. The maximum thermal loads (Load Case 29) and the maximum seismic loads (Load Case 31) for this elbow are as follows:

M_C = 1879 ft-lb = 22548 in-lb
F_{aC} = 3310 lb

M_E = 2045 ft-lb = 24540 in-lb
F_{aE} = 2952 lb

For deadweight loads, conservatively use the maximum values shown in Table 7.2.2a. Hence:

M_A = 117 ft-lb = 1404 in-lb
F_{aA} = 155 lb

Substituting the above values into the equation for postulating medium energy leak crack yields:

$$\frac{25 * 12.75}{4 * 1.417} + 1.5\left[\frac{1404}{129} + \frac{155}{50.5}\right] + 2.0\left[\frac{22548}{129} + \frac{3310}{50.5}\right] + 2.0\left[\frac{24540}{129} + \frac{2952}{50.5}\right] = 1055\,psi < 1069\,psi$$

Therefore, there are no postulated moderate energy leak cracks on this 45° mitered elbow or the remaining mitered elbows.

8.2 Final Loads at the Anchor at the Diesel Generator Building due to Soil Effects

The maximum loads acting from the HDPE pipe for Service Levels A, B, C and D acting on the anchor at the face of the Diesel Generator Building are extracted from the results of the ADLPIPE analysis. These loads are summarized in Tables 8.2a and 8.2b and compared to the maximum loads that the HDPE pipe can contribute to anchor load at the face of the Diesel Generator Building.

Table 8.2a: HDPE Loads from ADLPIPE for Anchor at Diesel Generator Building

Load Case	Node Point	Fx (lbs)	Fy (lbs)	Fz (lbs)	Mx (ft-lb)	My (ft-lb)	Mz (ft-lb)
10 (DW)	100	0	515	0	1	0	1226
27 (Th)	100	6715	0	0	20	0	0
28 (Th)	100	7403	0	0	23	0	0
29 (Th)	100	10110	0	0	33	0	0
31 (SSE)	100	7914	0	0	37	0	2
32(OBE)	100	4221	0	0	20	0	1

Table 8.2b: HDPE Loads combined for maximum forces and moments to be compared to allowable interface loads applied to the steel pipe per Ref. [23]

Load Case	Node Point	Axial Force (lbs)		Shear Force (lbs)		Resultant Moment (in-lbs)	
		Combined from ADLPIPE	Maximum	Combined from ADLPIPE	Maximum	Combined from ADLPIPE	Maximum
10 (DW)	130	0	4200	98	4200	481	100000
27 (Th)	130	6715 (1)	4200	0	4200	240	100000
28 (Th)	130	7403 (1)	4600	0	4600	276	100000
29 (Th)	130	10110 (1)	5500	0	5500	396	100000
31 (SSE)	130	7914 (1)	4600	0	4600	445	100000
32 (OBE)	130	4221	4600	0	4600	241	100000

(1) The thermal axial forces exceed the maximum for the HDPE pipe. These forces are acceptable due to the very small shear force and moment at the same node point. Therefore, the loads shown above will be used as input for the anchor design at the Diesel Generator Building.

8.3 Final Loads at the Centerline of the 42" ø Supply Line due to Soil Effects

Table 8.3a: HDPE Loads from ADLPIPE at the Centerline of the 42" ø Supply Line

Load Case	Node Point	Fx (lbs)	Fy (lbs)	Fz (lbs)	Mx (ft-lb)	My (ft-lb)	Mz (ft-lb)
10 (DW)	5600	2074	858	20	139	226	1916
27 (Th)	5600	55	199	5991	31880	13282	147
28 (Th)	5600	61	222	6572	34957	14568	170
29 (Th)	5600	86	328	8820	46798	19524	271
31 (SSE)	5600	88	368	5917	30772	12923	347
32 (OBE)	5600	47	196	3155	16410	6892	185

8.4 Branch Line Qualification

The branch line meets the 1989 ASME BPVC Code allowable stresses. Table 8.4a below shows the results of the ADLPIPE analysis for the branch line (Nodes 5490 to 5560).

Table 8.4a
Result Summary for 12" Steel Branch Line

Acceptance Criteria	Calculated Stress [psi]	Allowable Stress [psi]	Calculated / Allowable	Node Point
Deadweight and Pressure (Design)	1277	22500	0.06	5560
Deadweight and Pressure (Level A)	542	27000	0.02	5560
Thermal (Level A)	6587	22500	0.29	5560
Deadweight and Pressure (Level B)	542	27000	0.02	5560
Thermal and Seismic (Level B)	7519	22500	0.33	5560
Seismic (Level C/D)	6304	22500	0.28	5560

9.0 CONCLUSIONS

The existing 10-in carbon steel buried nuclear service water piping lines connecting the 42-in Nuclear Service Water System (NSWS) Return Header 'A' to Unit 1 Diesel Generator (DG) building piping at the Catawba Nuclear Station will be replaced by 12-in high-density polyethylene (HDPE) piping system. This calculation determined that the buried HDPE piping system connecting the 42-in Return Header 'A' to the DG building of Unit 1 meets all applicable acceptance criteria as defined in the piping design specification Ref. [26] which is consistent with the Relief Request, Ref. [14], and the ASME BPVC Code Case N-755 [Ref. 12] as summarized in Table 8-1.

.

Appendix A

ADLPIPE Model Isometrics

CALCULATION CONTINUATION SHEET

Client	Duke Power Carolinas, LLC			Calculation No.		07Q3691-CAL-004	
Project	Catawba Unit # 1 and #2 – Buried HDPE Piping Design and Analysis						
Title	Analysis of Buried HDPE Piping System— Nuclear Service Water (NSW) Return Line Diesel Generator "1A" Unit 1						
By:		Date	11/10/08	Chk'd by		Date	11/11/08

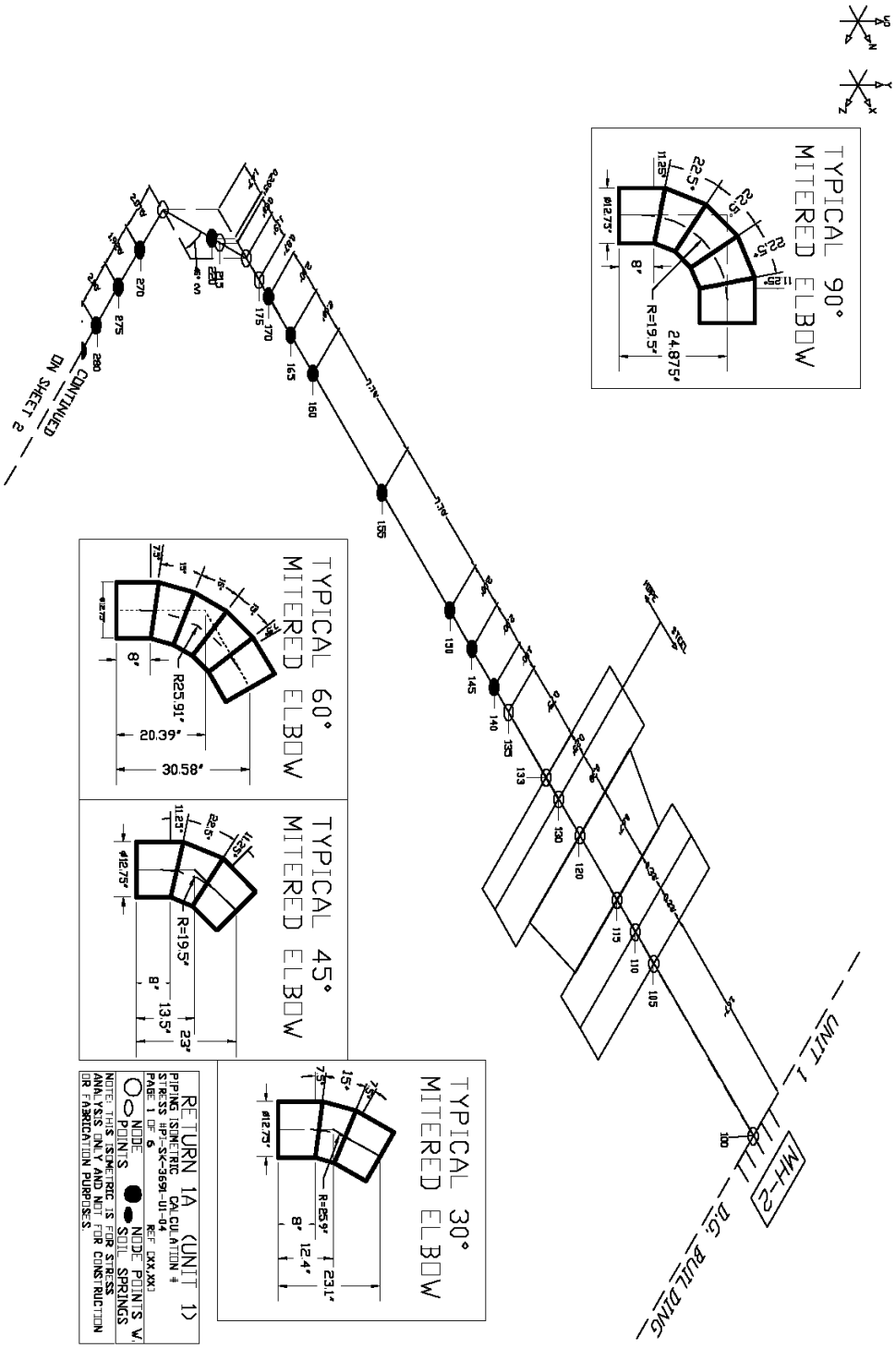

CALCULATION CONTINUATION SHEET

Client	Duke Power Carolinas, LLC			Calculation No.		07Q3691-CAL-004	
Project	Catawba Unit # 1 and #2 – Buried HDPE Piping Design and Analysis						
Title	Analysis of Buried HDPE Piping System— Nuclear Service Water (NSW) Return Line Diesel Generator "1A" Unit 1						
By:		Date	11/10/08	Chk'd by		Date	11/11/08

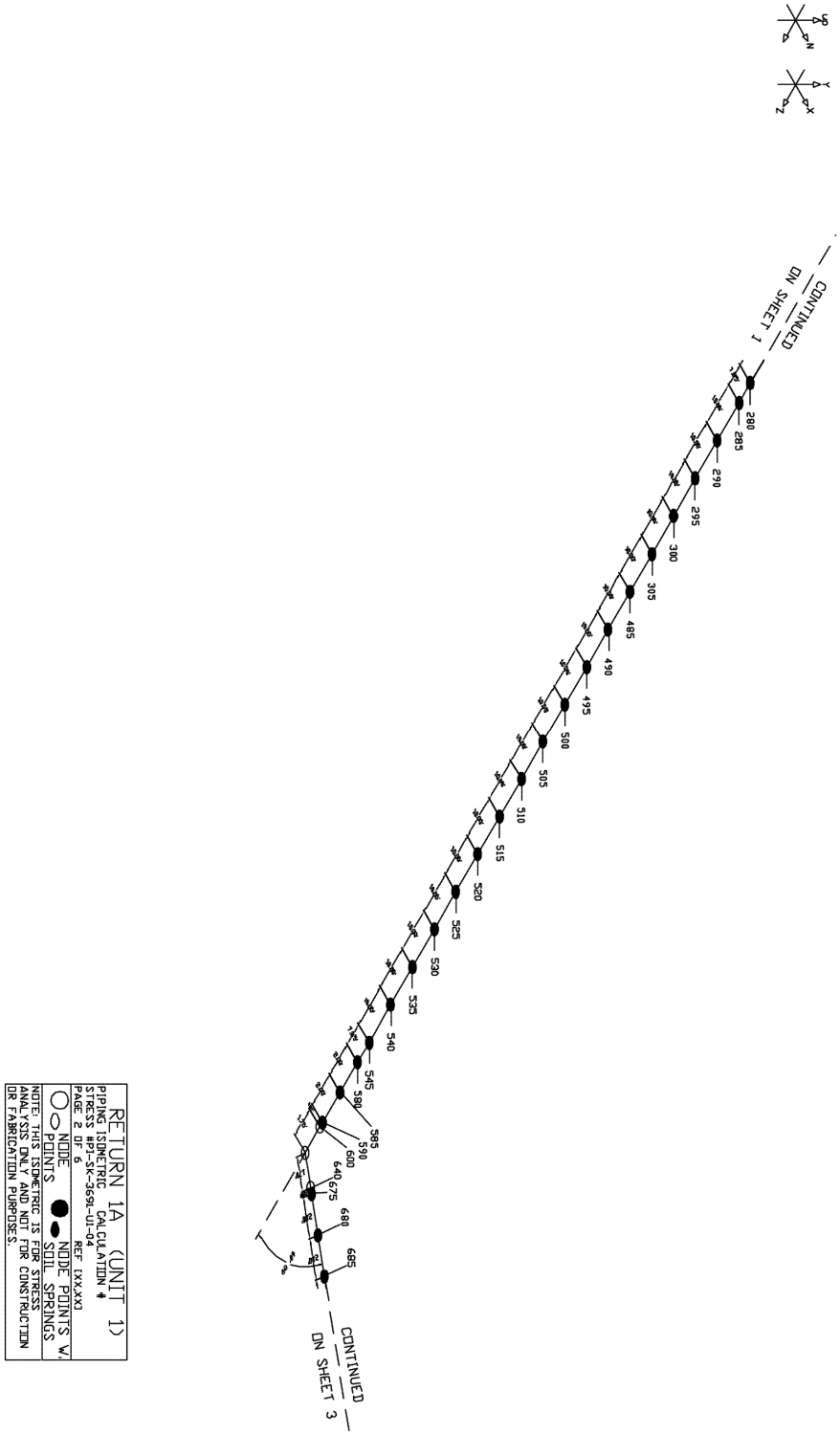

CALCULATION CONTINUATION SHEET

Client	Duke Power Carolinas, LLC			Calculation No.	07Q3691-CAL-004		
Project	Catawba Unit # 1 and #2 – Buried HDPE Piping Design and Analysis						
Title	Analysis of Buried HDPE Piping System— Nuclear Service Water (NSW) Return Line Diesel Generator "1A" Unit 1						
By:		Date	11/10/08	Chk'd by		Date	11/11/08

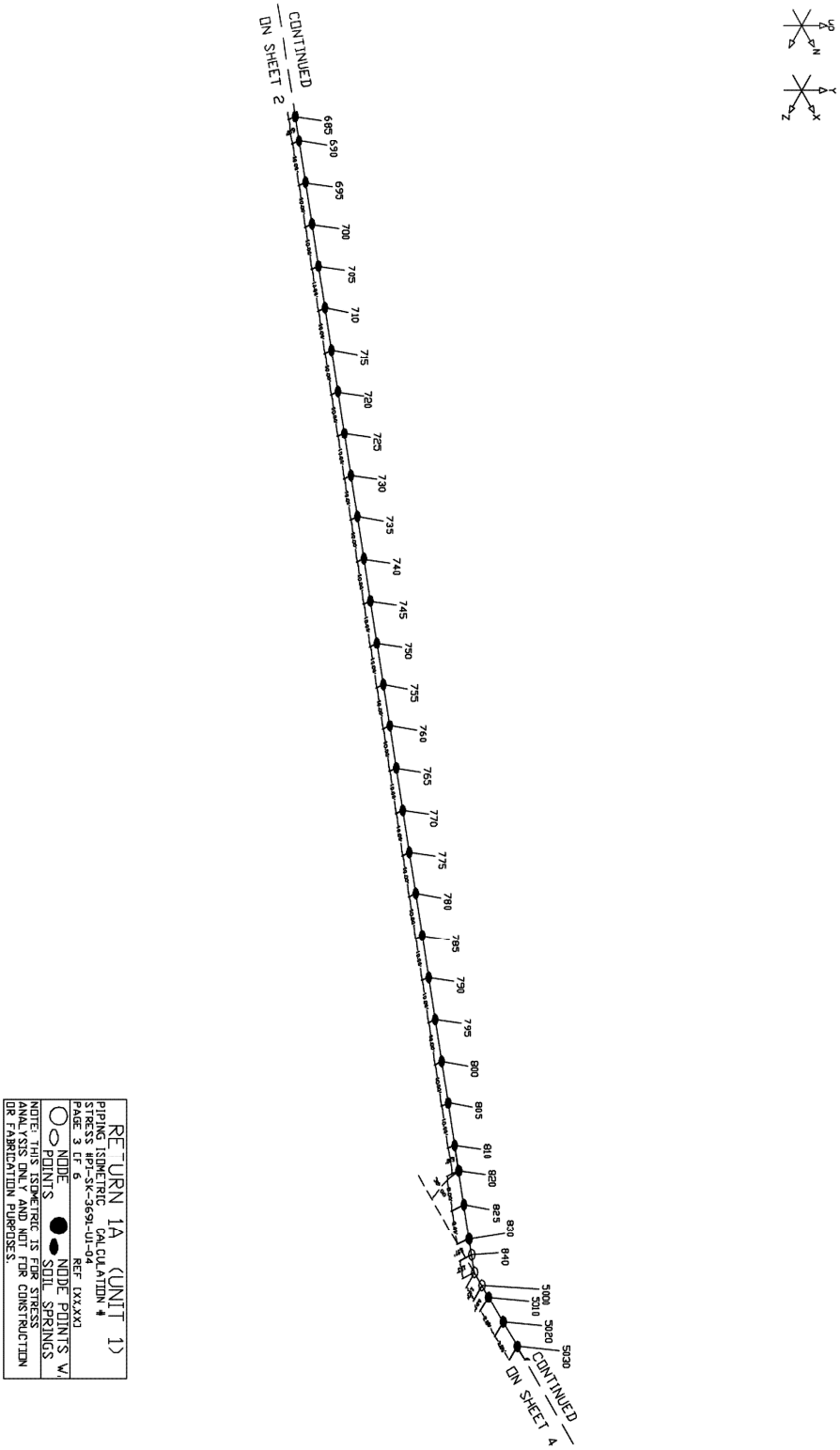

CALCULATION CONTINUATION SHEET

Client	Duke Power Carolinas, LLC			Calculation No.	07Q3691-CAL-004		
Project	Catawba Unit # 1 and #2 – Buried HDPE Piping Design and Analysis						
Title	Analysis of Buried HDPE Piping System— Nuclear Service Water (NSW) Return Line Diesel Generator "1A" Unit 1						
By:		Date	11/10/08	Chk'd by		Date	11/11/08

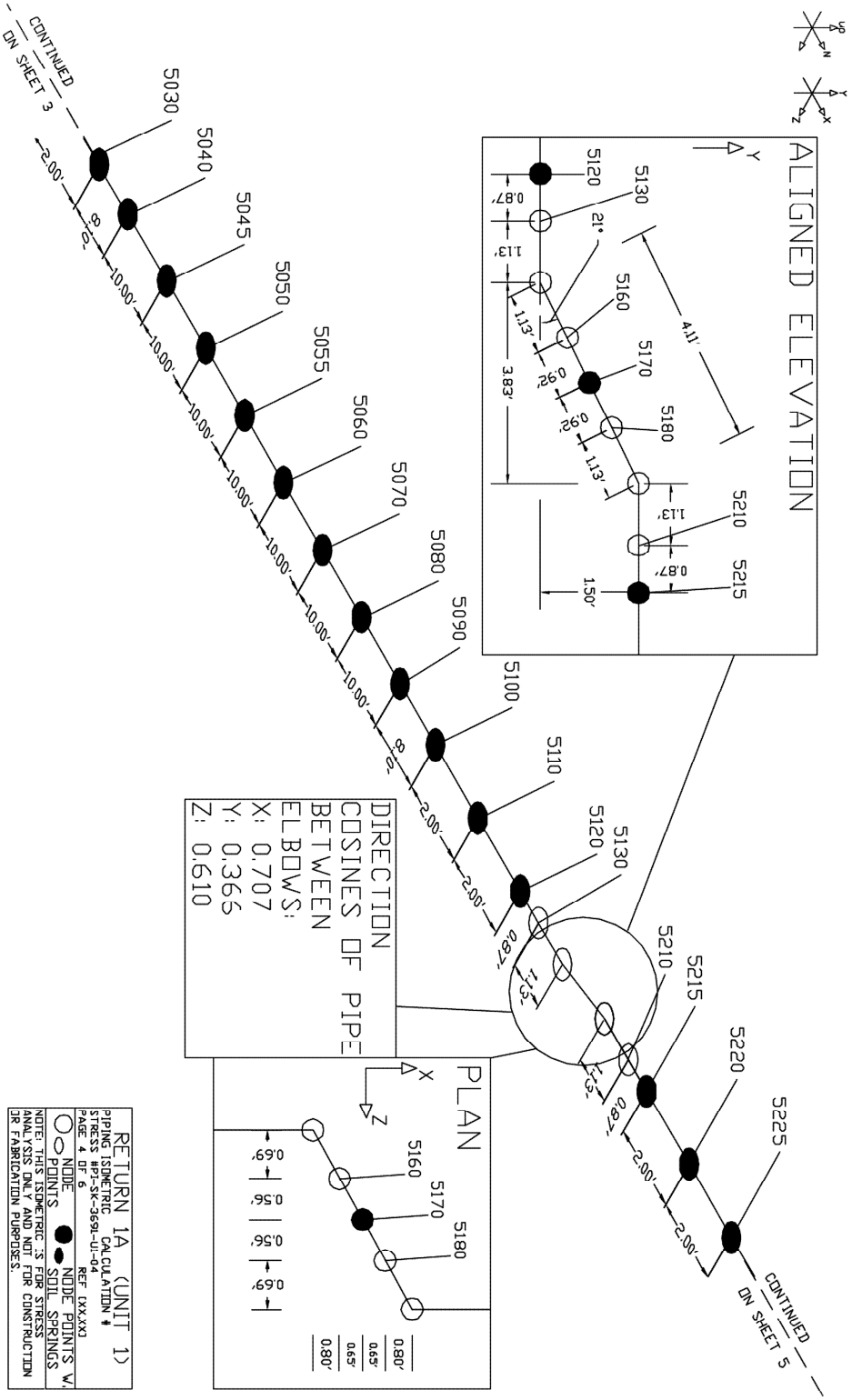

CALCULATION CONTINUATION SHEET

Client	Duke Power Carolinas, LLC			Calculation No.		07Q3691-CAL-004	
Project	Catawba Unit # 1 and #2 – Buried HDPE Piping Design and Analysis						
Title	Analysis of Buried HDPE Piping System— Nuclear Service Water (NSW) Return Line Diesel Generator "1A" Unit 1						
By:		Date	11/10/08	Chk'd by		Date	11/11/08

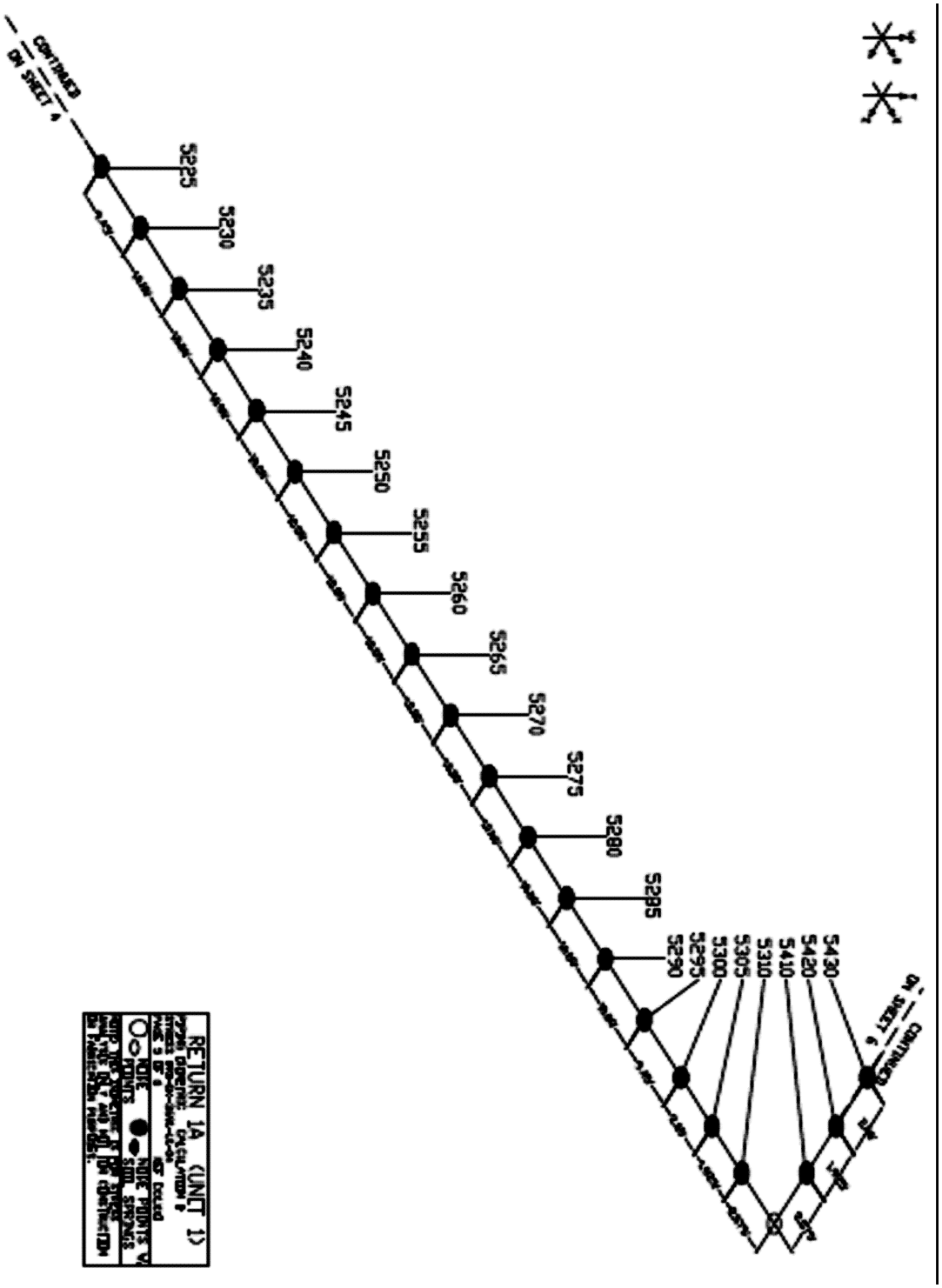

CALCULATION CONTINUATION SHEET

Client	Duke Power Carolinas, LLC			Calculation No.		07Q3691-CAL-004	
Project	Catawba Unit # 1 and #2 – Buried HDPE Piping Design and Analysis						
Title	Analysis of Buried HDPE Piping System— Nuclear Service Water (NSW) Return Line Diesel Generator "1A" Unit 1						
By:		Date	11/10/08	Chk'd by		Date	11/11/08

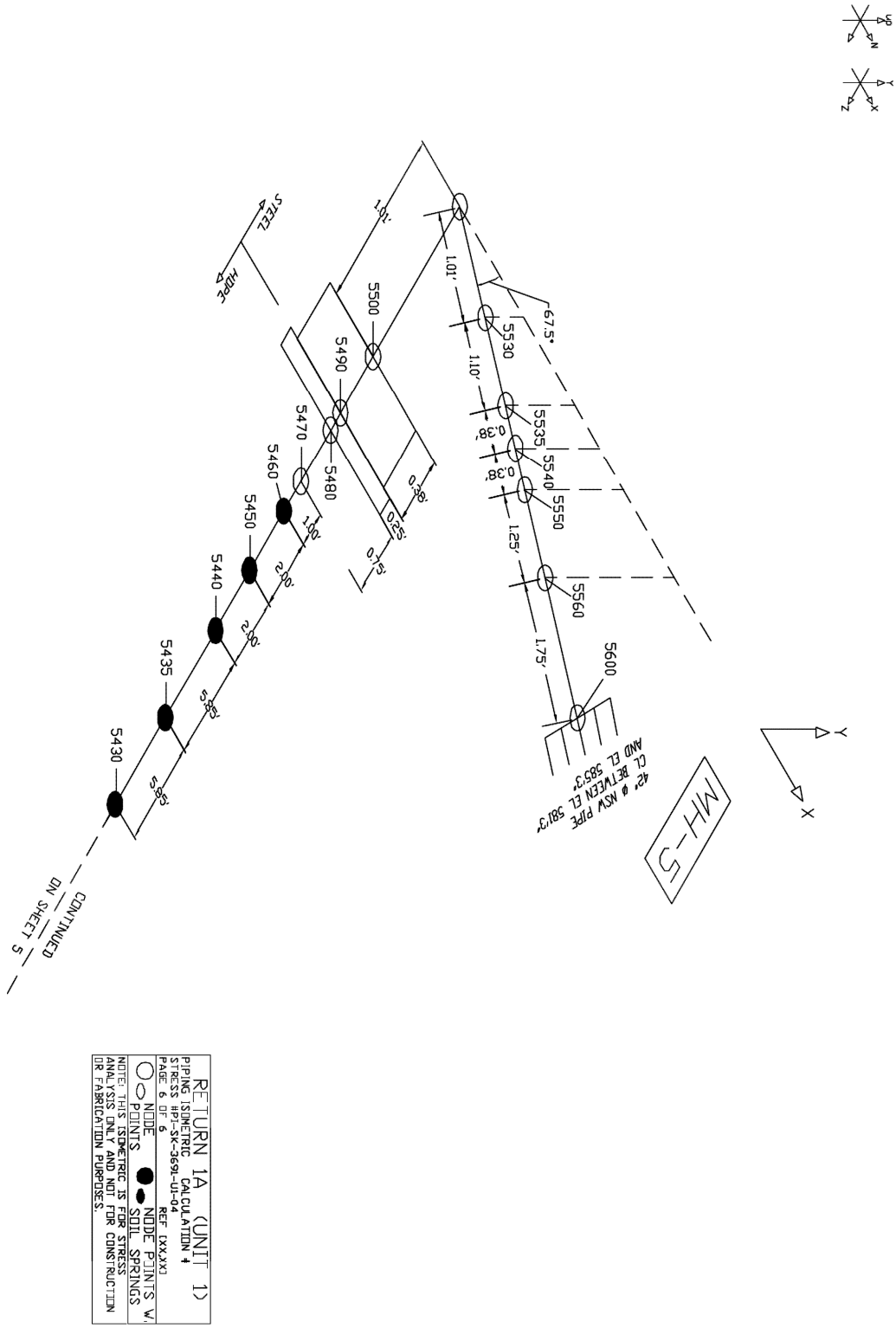

RETURN 1A (UNIT 1)
PIPING ISOMETRIC CALCULATION 4
STRESS #P1-SK-3691-U1-04
PAGE 6 OF 6 REF [XX.XX]
NODE POINTS
NODE POINTS W/ SOIL SPRINGS
NOTE: THIS ISOMETRIC IS FOR STRESS ANALYSIS ONLY AND NOT FOR CONSTRUCTION OR FABRICATION PURPOSES.

Appendix B

ADLPIPE Input and Output files

INPUT FILE

```
GE,CATAWBA NUCLEAR STATION
GE,COOLING WATER RETURN LINE FROM D/G BLDG OF UNIT 1 TO 42-IN HEADER "A"
UN,0,0,0,
NOTE,MODEL=return1a.adi
NO,*****************************************************************
NO,THERE ARE TWO RETURN LINES RUNNING FROM THE D/G BUILDING OF UNIT 1
NO,THIS IS THE LINE THAT GOES TO THE 42-IN RETURN HEADER 'A'
NO,*****************************************************************
NO,COORDINATE SYSTEM: +X = NORTH, +Z = EAST, Y = VERTICAL
NO,*****************************************************************
NO,PIPING: 10" AND 12", SCH. 40, Cr-Mo AND CARBON STEEL PIPES,
NO,        12", DR 11, IPS HDPE PIPE,
NO,CONTENTS:
NO,        WATER FILLED, NO INSULATION,
NO,DESIGN CONDITIONS:
NO,        T(AMBIENT) = 55 F, T(DESIGN) = 140 F, P(DESIGN) = 60 PSIG
NO,CODE:   ASME, YEAR 1989,
NO,*****************************************************************
NO,ASSUME PIPE IS ANCHORED AT BOTH ENDS
AN,,100,
RE,,100,1,1,1,1,1,1,
AN,,5600,
RE,,5600,1,1,1,1,1,1,
NO,*****************************************************************
NO,THE FOLLOWING SOIL SPRING STIFFNESS VALUES IN [LB/IN] ARE USED.
NO
NO,                                 LENGTH OF PIPE BETWEEN SPRINGS
NO,     SOIL HEIGHT    DIRECTION    ------------------------------
NO,     ABOVE PIPE     OF SPRING    2FT SECTION      10FT SECTION
NO,     ------------------------------------------------------------
NO,   H = 5 FT    LATERAL          3120        15600
NO,               VERTICAL    12960       64800
NO,               AXIAL       10200       51000
NO
NO,   H = 6 FT    LATERAL          3360        16800
NO,               VERTICAL    14640       73200
NO,               AXIAL       12000       60000
NO
NO,   H = 7.5 FT  LATERAL          3720        18600
NO,               VERTICAL    16920       84600
NO,               AXIAL       14760       73800
NO
NO,STIFFNESS VALUES FOR OTHER LENGTHS ARE OBTAINED BY PROPORTION
NO,*****************************************************************
NO
RE,,1140,1,1,1,1,1,1,
RE,,2140,1,1,1,1,1,1,
RE,,3140,1,1,1,1,1,1,
```

```
RE,,1145,1,1,1,1,1,1,
RE,,2145,1,1,1,1,1,1,
RE,,3145,1,1,1,1,1,1,
RE,,1150,1,1,1,1,1,1,
RE,,2150,1,1,1,1,1,1,
RE,,3150,1,1,1,1,1,1,
RE,,1155,1,1,1,1,1,1,
RE,,2155,1,1,1,1,1,1,
RE,,3155,1,1,1,1,1,1,
RE,,1160,1,1,1,1,1,1,
RE,,2160,1,1,1,1,1,1,
RE,,3160,1,1,1,1,1,1,
RE,,1165,1,1,1,1,1,1,
RE,,2165,1,1,1,1,1,1,
RE,,3165,1,1,1,1,1,1,
RE,,1170,1,1,1,1,1,1,
RE,,2170,1,1,1,1,1,1,
RE,,3170,1,1,1,1,1,1,
RE,,1220,1,1,1,1,1,1,
RE,,2220,1,1,1,1,1,1,
RE,,3220,1,1,1,1,1,1,
RE,,1275,1,1,1,1,1,1,
RE,,2275,1,1,1,1,1,1,
RE,,3275,1,1,1,1,1,1,
RE,,1280,1,1,1,1,1,1,
RE,,2280,1,1,1,1,1,1,
RE,,3280,1,1,1,1,1,1,
RE,,1285,1,1,1,1,1,1,
RE,,2285,1,1,1,1,1,1,
RE,,3285,1,1,1,1,1,1,
RE,,1290,1,1,1,1,1,1,
RE,,2290,1,1,1,1,1,1,
RE,,3290,1,1,1,1,1,1,
RE,,1295,1,1,1,1,1,1,
RE,,2295,1,1,1,1,1,1,
RE,,3295,1,1,1,1,1,1,
RE,,1300,1,1,1,1,1,1,
RE,,2300,1,1,1,1,1,1,
RE,,3300,1,1,1,1,1,1,
RE,,1305,1,1,1,1,1,1,
RE,,2305,1,1,1,1,1,1,
RE,,3305,1,1,1,1,1,1,
RE,,1485,1,1,1,1,1,1,
RE,,2485,1,1,1,1,1,1,
RE,,3485,1,1,1,1,1,1,
RE,,1490,1,1,1,1,1,1,
RE,,2490,1,1,1,1,1,1,
RE,,3490,1,1,1,1,1,1,
RE,,1495,1,1,1,1,1,1,
RE,,2495,1,1,1,1,1,1,
RE,,3495,1,1,1,1,1,1,
```

```
RE,,1500,1,1,1,1,1,1,
RE,,2500,1,1,1,1,1,1,
RE,,3500,1,1,1,1,1,1,
RE,,1505,1,1,1,1,1,1,
RE,,2505,1,1,1,1,1,1,
RE,,3505,1,1,1,1,1,1,
RE,,1510,1,1,1,1,1,1,
RE,,2510,1,1,1,1,1,1,
RE,,3510,1,1,1,1,1,1,
RE,,1515,1,1,1,1,1,1,
RE,,2515,1,1,1,1,1,1,
RE,,3515,1,1,1,1,1,1,
RE,,1520,1,1,1,1,1,1,
RE,,2520,1,1,1,1,1,1,
RE,,3520,1,1,1,1,1,1,
RE,,1525,1,1,1,1,1,1,
RE,,2525,1,1,1,1,1,1,
RE,,3525,1,1,1,1,1,1,
RE,,1530,1,1,1,1,1,1,
RE,,2530,1,1,1,1,1,1,
RE,,3530,1,1,1,1,1,1,
RE,,1535,1,1,1,1,1,1,
RE,,2535,1,1,1,1,1,1,
RE,,3535,1,1,1,1,1,1,
RE,,1540,1,1,1,1,1,1,
RE,,2540,1,1,1,1,1,1,
RE,,3540,1,1,1,1,1,1,
RE,,1545,1,1,1,1,1,1,
RE,,2545,1,1,1,1,1,1,
RE,,3545,1,1,1,1,1,1,
RE,,1580,1,1,1,1,1,1,
RE,,2580,1,1,1,1,1,1,
RE,,3580,1,1,1,1,1,1,
RE,,1585,1,1,1,1,1,1,
RE,,2585,1,1,1,1,1,1,
RE,,3585,1,1,1,1,1,1,
RE,,1590,1,1,1,1,1,1,
RE,,2590,1,1,1,1,1,1,
RE,,3590,1,1,1,1,1,1,
RE,,1675,1,1,1,1,1,1,
RE,,2675,1,1,1,1,1,1,
RE,,3675,1,1,1,1,1,1,
RE,,1680,1,1,1,1,1,1,
RE,,2680,1,1,1,1,1,1,
RE,,3680,1,1,1,1,1,1,
RE,,1685,1,1,1,1,1,1,
RE,,2685,1,1,1,1,1,1,
RE,,3685,1,1,1,1,1,1,
RE,,1690,1,1,1,1,1,1,
RE,,2690,1,1,1,1,1,1,
RE,,3690,1,1,1,1,1,1,
```

```
RE,,1695,1,1,1,1,1,1,
RE,,2695,1,1,1,1,1,1,
RE,,3695,1,1,1,1,1,1,
RE,,1700,1,1,1,1,1,1,
RE,,2700,1,1,1,1,1,1,
RE,,3700,1,1,1,1,1,1,
RE,,1705,1,1,1,1,1,1,
RE,,2705,1,1,1,1,1,1,
RE,,3705,1,1,1,1,1,1,
RE,,1710,1,1,1,1,1,1,
RE,,2710,1,1,1,1,1,1,
RE,,3710,1,1,1,1,1,1,
RE,,1715,1,1,1,1,1,1,
RE,,2715,1,1,1,1,1,1,
RE,,3715,1,1,1,1,1,1,
RE,,1720,1,1,1,1,1,1,
RE,,2720,1,1,1,1,1,1,
RE,,3720,1,1,1,1,1,1,
RE,,1725,1,1,1,1,1,1,
RE,,2725,1,1,1,1,1,1,
RE,,3725,1,1,1,1,1,1,
RE,,1730,1,1,1,1,1,1,
RE,,2730,1,1,1,1,1,1,
RE,,3730,1,1,1,1,1,1,
RE,,1735,1,1,1,1,1,1,
RE,,2735,1,1,1,1,1,1,
RE,,3735,1,1,1,1,1,1,
RE,,1740,1,1,1,1,1,1,
RE,,2740,1,1,1,1,1,1,
RE,,3740,1,1,1,1,1,1,
RE,,1745,1,1,1,1,1,1,
RE,,2745,1,1,1,1,1,1,
RE,,3745,1,1,1,1,1,1,
RE,,1750,1,1,1,1,1,1,
RE,,2750,1,1,1,1,1,1,
RE,,3750,1,1,1,1,1,1,
RE,,1755,1,1,1,1,1,1,
RE,,2755,1,1,1,1,1,1,
RE,,3755,1,1,1,1,1,1,
RE,,1760,1,1,1,1,1,1,
RE,,2760,1,1,1,1,1,1,
RE,,3760,1,1,1,1,1,1,
RE,,1765,1,1,1,1,1,1,
RE,,2765,1,1,1,1,1,1,
RE,,3765,1,1,1,1,1,1,
RE,,1770,1,1,1,1,1,1,
RE,,2770,1,1,1,1,1,1,
RE,,3770,1,1,1,1,1,1,
RE,,1775,1,1,1,1,1,1,
RE,,2775,1,1,1,1,1,1,
RE,,3775,1,1,1,1,1,1,
```

```
RE,,1780,1,1,1,1,1,1,
RE,,2780,1,1,1,1,1,1,
RE,,3780,1,1,1,1,1,1,
RE,,1785,1,1,1,1,1,1,
RE,,2785,1,1,1,1,1,1,
RE,,3785,1,1,1,1,1,1,
RE,,1790,1,1,1,1,1,1,
RE,,2790,1,1,1,1,1,1,
RE,,3790,1,1,1,1,1,1,
RE,,1795,1,1,1,1,1,1,
RE,,2795,1,1,1,1,1,1,
RE,,3795,1,1,1,1,1,1,
RE,,1800,1,1,1,1,1,1,
RE,,2800,1,1,1,1,1,1,
RE,,3800,1,1,1,1,1,1,
RE,,1805,1,1,1,1,1,1,
RE,,2805,1,1,1,1,1,1,
RE,,3805,1,1,1,1,1,1,
RE,,1810,1,1,1,1,1,1,
RE,,2810,1,1,1,1,1,1,
RE,,3810,1,1,1,1,1,1,
RE,,1820,1,1,1,1,1,1,
RE,,2820,1,1,1,1,1,1,
RE,,3820,1,1,1,1,1,1,
RE,,1825,1,1,1,1,1,1,
RE,,2825,1,1,1,1,1,1,
RE,,3825,1,1,1,1,1,1,
RE,,1830,1,1,1,1,1,1,
RE,,2830,1,1,1,1,1,1,
RE,,3830,1,1,1,1,1,1,
RE,,15010,1,1,1,1,1,1,1,
RE,,25010,1,1,1,1,1,1,1,
RE,,35010,1,1,1,1,1,1,1,
RE,,15020,1,1,1,1,1,1,1,
RE,,25020,1,1,1,1,1,1,1,
RE,,35020,1,1,1,1,1,1,1,
RE,,15030,1,1,1,1,1,1,1,
RE,,25030,1,1,1,1,1,1,1,
RE,,35030,1,1,1,1,1,1,1,
RE,,15040,1,1,1,1,1,1,1,
RE,,25040,1,1,1,1,1,1,1,
RE,,35040,1,1,1,1,1,1,1,
RE,,15045,1,1,1,1,1,1,1,
RE,,25045,1,1,1,1,1,1,1,
RE,,35045,1,1,1,1,1,1,1,
RE,,15050,1,1,1,1,1,1,1,
RE,,25050,1,1,1,1,1,1,1,
RE,,35050,1,1,1,1,1,1,1,
RE,,15055,1,1,1,1,1,1,1,
RE,,25055,1,1,1,1,1,1,1,
RE,,35055,1,1,1,1,1,1,1,
```

```
RE,,15060,1,1,1,1,1,1,
RE,,25060,1,1,1,1,1,1,
RE,,35060,1,1,1,1,1,1,
RE,,15070,1,1,1,1,1,1,
RE,,25070,1,1,1,1,1,1,
RE,,35070,1,1,1,1,1,1,
RE,,15080,1,1,1,1,1,1,
RE,,25080,1,1,1,1,1,1,
RE,,35080,1,1,1,1,1,1,
RE,,15090,1,1,1,1,1,1,
RE,,25090,1,1,1,1,1,1,
RE,,35090,1,1,1,1,1,1,
RE,,15100,1,1,1,1,1,1,
RE,,25100,1,1,1,1,1,1,
RE,,35100,1,1,1,1,1,1,
RE,,15110,1,1,1,1,1,1,
RE,,25110,1,1,1,1,1,1,
RE,,35110,1,1,1,1,1,1,
RE,,15120,1,1,1,1,1,1,
RE,,25120,1,1,1,1,1,1,
RE,,35120,1,1,1,1,1,1,
RE,,15170,1,1,1,1,1,1,
RE,,25170,1,1,1,1,1,1,
RE,,35170,1,1,1,1,1,1,
RE,,15215,1,1,1,1,1,1,
RE,,25215,1,1,1,1,1,1,
RE,,35215,1,1,1,1,1,1,
RE,,15220,1,1,1,1,1,1,
RE,,25220,1,1,1,1,1,1,
RE,,35220,1,1,1,1,1,1,
RE,,15225,1,1,1,1,1,1,
RE,,25225,1,1,1,1,1,1,
RE,,35225,1,1,1,1,1,1,
RE,,15230,1,1,1,1,1,1,
RE,,25230,1,1,1,1,1,1,
RE,,35230,1,1,1,1,1,1,
RE,,15235,1,1,1,1,1,1,
RE,,25235,1,1,1,1,1,1,
RE,,35235,1,1,1,1,1,1,
RE,,15240,1,1,1,1,1,1,
RE,,25240,1,1,1,1,1,1,
RE,,35240,1,1,1,1,1,1,
RE,,15245,1,1,1,1,1,1,
RE,,25245,1,1,1,1,1,1,
RE,,35245,1,1,1,1,1,1,
RE,,15250,1,1,1,1,1,1,
RE,,25250,1,1,1,1,1,1,
RE,,35250,1,1,1,1,1,1,
RE,,15255,1,1,1,1,1,1,
RE,,25255,1,1,1,1,1,1,
RE,,35255,1,1,1,1,1,1,
```

```
RE,,15260,1,1,1,1,1,1,
RE,,25260,1,1,1,1,1,1,
RE,,35260,1,1,1,1,1,1,
RE,,15265,1,1,1,1,1,1,
RE,,25265,1,1,1,1,1,1,
RE,,35265,1,1,1,1,1,1,
RE,,15270,1,1,1,1,1,1,
RE,,25270,1,1,1,1,1,1,
RE,,35270,1,1,1,1,1,1,
RE,,15275,1,1,1,1,1,1,
RE,,25275,1,1,1,1,1,1,
RE,,35275,1,1,1,1,1,1,
RE,,15280,1,1,1,1,1,1,
RE,,25280,1,1,1,1,1,1,
RE,,35280,1,1,1,1,1,1,
RE,,15285,1,1,1,1,1,1,
RE,,25285,1,1,1,1,1,1,
RE,,35285,1,1,1,1,1,1,
RE,,15290,1,1,1,1,1,1,
RE,,25290,1,1,1,1,1,1,
RE,,35290,1,1,1,1,1,1,
RE,,15295,1,1,1,1,1,1,
RE,,25295,1,1,1,1,1,1,
RE,,35295,1,1,1,1,1,1,
RE,,15300,1,1,1,1,1,1,
RE,,25300,1,1,1,1,1,1,
RE,,35300,1,1,1,1,1,1,
RE,,15305,1,1,1,1,1,1,
RE,,25305,1,1,1,1,1,1,
RE,,35305,1,1,1,1,1,1,
RE,,15310,1,1,1,1,1,1,
RE,,25310,1,1,1,1,1,1,
RE,,35310,1,1,1,1,1,1,
RE,,15410,1,1,1,1,1,1,
RE,,25410,1,1,1,1,1,1,
RE,,35410,1,1,1,1,1,1,
RE,,15420,1,1,1,1,1,1,
RE,,25420,1,1,1,1,1,1,
RE,,35420,1,1,1,1,1,1,
RE,,15430,1,1,1,1,1,1,
RE,,25430,1,1,1,1,1,1,
RE,,35430,1,1,1,1,1,1,
RE,,15435,1,1,1,1,1,1,
RE,,25435,1,1,1,1,1,1,
RE,,35435,1,1,1,1,1,1,
RE,,15440,1,1,1,1,1,1,
RE,,25440,1,1,1,1,1,1,
RE,,35440,1,1,1,1,1,1,
RE,,15450,1,1,1,1,1,1,
RE,,25450,1,1,1,1,1,1,
RE,,35450,1,1,1,1,1,1,
```

```
RE,,15460,1,1,1,1,1,1,
RE,,25460,1,1,1,1,1,1,
RE,,35460,1,1,1,1,1,1,
SE,,0,
NO,*****************************************************************
NO,THE PIPING SYSTEM STARTS AT THE SURFACE OF THE D/G BUILDING WALL
NO,WITH A 10-IN Cr-Mo STEEL PIPE THAT IS CONSIDERED ANCHORED AT THE
NO,SURFACE OF THE WALL (NODE PT. 100).
NO
NO,PIPING IS AT ELEVATION 588'-6"
NO
NO,A 10X12 STEEL REDUCER, WITH FLANGES WELDED ON ITS ENDS, CONNECTS,
NO,THE 10-IN PIPE TO A 12-IN HDPE PIPE.
NO,*****************************************************************
NO,10-IN, SCH. 40 Cr-Mo STEEL PIPE PROPERTIES:,
NO,     OUTSIDE DIAMETER = 10.75 IN
NO,     WALL THICKNESS = 0.365 IN
NO,     WT(PIPE)= 40.5LB/FT = 3.38 LB/IN
NO,     WT(WATER) = 34.1 LB/FT= 2.84 LB/IN
NO,     WT(PIPE+WATER) = 3.38 + 2.84 = 6.22 LB/IN
NO
NO,PROPERTIES OF PIPE MATERIAL (SB-690/SB-675) AT 70 F:
NO,     E = 28E+06 PSI
NO,     ALPHA = 8.1E-06 IN/IN/F
NO,*****************************************************************
NO
PI,100,105,10.75,0.365,28.0,8.1,.01,6.22,
NO
NO,*****************************************************************
NO,LENGTH OF 10-IN DIAMETER PIPE COMING OUT OF WALL = 20IN = 1.67FT
NO,*****************************************************************
NO
RU,100,105,-1.67,,,
NO
NO,*****************************************************************
NO,ATTACH A 150-LB WELDING NECK (WN) FLANGE TO END OF 10-IN PIPE
NO,AND TO THE 10" SIDE OF REDUCER
NO,FOR 10-IN WN FLANGE (PER LADISH CATALOG):
NO,    TOTAL LENGTH = 4.0 IN = 0.33 FT
NO,    FLANGE THICKNESS = 1.188 IN
NO,    O. D. OF FLANGE = 16 IN
NO,    DIAMETER AT HUB BASE= 12.0 IN
NO,    WALL THICKNESS (MIN) = 0.365 IN
NO,    WEIGHT OF FLANGE= 54 LB -->  UNIT WT = 13.50 LB/IN
NO,    WT(FLANGE+WATER)= 13.50 + 2.84 = 16.3 LB/IN
NO,USE DIAMETER AT HUB BASE AS O.D. FOR MODELING
NO,*****************************************************************
NO
NOTE,IV=WNFL,END=FLG
1V,105,110,-0.33,,,12.0,0.365,16.3,
NOTE,IV=WNFL,BEG=FLG
```

```
1V,110,115,-0.33,,,12.0,0.365,16.3,
NO
NO,*****************************************************************
NO,INSTALL A 10X12 STEEL REDUCER.
NO,PER LADISH CATALOG:
NO,      REDUCER LENGTH = 8 IN = 0.67 FT
NO,      REDUCER WEIGHT = 34 LB --> UNIT WT = 4.25 LB/IN
NO,WEIGHT OF WATER:
NO,      FOR 10" PIPE = 34.1 LB/FT = 2.84 LB/IN
NO,      FOR 12" PIPE = 49.0 LB/FT = 4.08 LB/IN
NO,      FOR 10X12 REDUCER = (2.84+4.08)/2 = 3.46 LB/IN
NO,WT (REDUCER+WATER) = 4.25 + 3.46 = 7.7 LB/IN
NO,FOR 12" PIPE: OD = 12.75 IN AND WALL THICKNESS = 0.375 IN
NO,*****************************************************************
NO
RD,115,120,-0.67,,,12.75,0.375,7.7,
NO
NO,*****************************************************************
NO,ATTACH A WELDING NECK (WN) FLANGE TO THE 12-IN SIDE OF REDUCER
NO,FOR 12-IN,150-LB WN FLANGE (PER LADISH CATALOG):,
NO,    TOTAL LENGTH = 4.5 IN = 0.38 FT
NO,    FLANGE THICKNESS = 1.25 IN
NO,    O. D. OF FLANGE = 19 IN
NO,    DIAMETER AT HUB BASE= 14.375 IN
NO,    WALL THICKNESS (MIN) = 0.375 IN
NO,    WEIGHT OF FLANGE= 88 LB -->  UNIT WT = 19.56 LB/IN
NO,    WT(FLANGE+WATER)= 19.56 + 4.08 = 23.6 LB/IN
NO,USE DIAMETER AT HUB BASE AS O.D. FOR MODELING
NO,******************************************************************
NO
NOTE,IV=WNFL,END=FLG
1V,120,130,-0.38,,,14.375,0.375,23.6,
SE,,0,
NO
NO,******************************************************************
NO,                      CHANGE TO 12" HDPE PIPE
NO,******************************************************************
NO,12-IN, DR 11, HDPE PIPE PROPERTIES:,
NO,     OUTSIDE DIAMETER, OD = 12.75 IN
NO,     MIN.WALL THICKNESS, t = 1.159 IN
NO,     INSIDE DIAMETER, ID = OD - 2t = 10.432 IN
NO,     WT(PIPE) = 18.41 LB/FT = 1.53 LB/IN
NO,     WT(WATER) = 37.04 LB/FT = 3.09 LB/IN
NO,     WT(WATER+PIPE) = 1.53 + 3.09 = 4.62 LB/IN
NO
NO,HDPE PROPERTIES AT 70F AND 50-YEAR DURATION:
NO,     E = 28 KSI
NO,     ALPHA = 90.0E-6 IN/IN/F
NO,******************************************************************
NO
PI,130,133,12.75,1.159,0.028,90.0,.01,4.62,
```

```
NO
NO,*****************************************************************
NO,INSTALL A FLANGE ADAPTER WITH A STEEL BACKUP RING MOUNTED ON IT
NO
NO,FOR 12-IN, DR 11, IPS HDPE FLANGE ADAPTER (PER ISCO CATALOG):,
NO,      TOTAL LENGTH = 12.0 IN = 1.0 FT
NO,      FLANGE THICKNESS = 1.55 IN
NO,      WEIGHT OF ADAPTER = 24 LB
NO,FOR 12-IN STEEL BACKUP RING (PER ISCO CATALOG):
NO,      THICKNESS = 1.25 IN,     WEIGHT = 24 LB
NO
NO,MODEL ADAPTER AND RING ASSEMBLY AS A PIPE AND FLANGE COMBINATION
NO,FOR FLANGE, USE:,
NO,      LENGTH = 1.55+1.25 = 2.8" -->  LENGTH = 3 IN
NO,      WALL THICKNESS = 1.159 IN
NO,      O.D. OF FLANGE = 15.5 IN
NO,      WEIGHT = WT(RING+ADAPTER) - WT(9" LONG PIPE)
NO,             = 24.0 + 24.0 - 18.4*(9/12) = 34.2 LB
NO       WT(FLANGE+WATER)= (34.2/3)+3.09 = 14.5 LB/IN
NO
NO,FOR PIPE, USE:,
NO,      LENGTH = 12.0 - 3.0 = 9 IN
NO,      WT(PIPE+WATER) = 4.54LB/IN
NO,*****************************************************************
NO
NOTE,IV=WNFL,BEG=FLG
1V,130,133,-0.25,,,15.5,1.159,14.5,
RU,133,135,-0.75,,,
NO
NO,*****************************************************************
NO,PIPE ORIENTATION: PARALLEL TO X-AXIS
NO
NO,SINCE PIPE AXIS IS AT ELEVATION 588'-6", HEIGHT OF SOIL (H) FROM,
NO,TOP OF PIPE = 5 FT.  THEREFORE, USE SOIL SPRING STIFFNESS VALUES
NO,OBTAINED FOR H = 5 FT
NO
NO,                      SPRING STIFFNESS [LB/IN]
NO,     DIRECTION       ----------------------------
NO,     OF SPRING       2FT SECTION     10FT SECTION
NO,     ---------------------------------------------
NO,   LATERAL           3120        15600
NO,   VERTICAL    12960       64800
NO,   AXIAL       10200       51000
NO
NO,START APPLYING SOIL SPRINGS AT 2 FT INTERVALS
NO,LOCATION OF 1ST SPRING SET FROM END OF FLANGE ADAPTER = 1.0FT
NO,*****************************************************************
NO
RU,135,140,-1.0,
SE,,0,
RU,140,1140,1.0,,,
```

```
2SP,140,1140,10200,,,
SE,,0,
RU,140,2140,,1.0,,
2SP,140,2140,12960,,,
SE,,0,
RU,140,3140,,,1.0,
2SP,140,3140,3120,,,
SE,,0,
RU,140,145,-2.0,
SE,,0,
RU,145,1145,1.0,,,
2SP,145,1145,10200,,,
SE,,0,
RU,145,2145,,1.0,,
2SP,145,2145,12960,,,
SE,,0,
RU,145,3145,,,1.0,
2SP,145,3145,3120,,,
SE,,0,
RU,145,150,-2.0,
SE,,0,
RU,150,1150,1.0,,,
2SP,150,1150,10200,,,
SE,,0,
RU,150,2150,,1.0,,
2SP,150,2150,12960,,,
SE,,0,
RU,150,3150,,,1.0,
2SP,150,3150,3120,,,
SE,,0,
NO,*****************************************************************
NO,CHANGE SOIL SPRING SPACING FROM 2FT TO 10 FT
NO
NO,REMAINING LENGTH OF PIPE PARALLEL TO X-AXIS= 34.9'-5'-6'= 23.9FT
NO
NO,LENGTH AVAILABLE TO APPLY SPRINGS EVERY 10FT = 23.9'-6.0'-2.5'
NO,                                             = 15.4 FT
NO,MODEL THIS AVAILABLE LENGTH WITH TWO SECTIONS AS FOLLOWS:
NO,       15.4 FT = 2 * 7.7 FT
NO,*****************************************************************
NO,EACH OF THE NEXT TWO SECTION ARE 7.7 FT LONG.  SOIL SPRING
NO,STIFFNESS VALUES ARE ADJUSTED (PROPORTIONAL TO SECTION LENGTH)
NO,*****************************************************************
NO
RU,150,155,-7.7,
SE,,0,
RU,155,1155,1.0,,,
2SP,155,1155,39270,,,
SE,,0,
RU,155,2155,,1.0,,
2SP,155,2155,49896,,,
```

```
SE,,0,
RU,155,3155,,,1.0,
2SP,155,3155,12012,,,
SE,,0,
RU,155,160,-7.7,
SE,,0,
RU,160,1160,1.0,,,
2SP,160,1160,39270,,,
SE,,0,
RU,160,2160,,1.0,,
2SP,160,2160,49896,,,
SE,,0,
RU,160,3160,,,1.0,
2SP,160,3160,12012,,,
SE,,0,
NO,*****************************************************************
NO,START APPLYING SOIL SPRINGS AROUND ELBOW AT 2 FT INTERVALS
NO,*****************************************************************
RU,160,165,-2.0,
SE,,0,
RU,165,1165,1.0,,,
2SP,165,1165,10200,,,
SE,,0,
RU,165,2165,,1.0,,
2SP,165,2165,12960,,,
SE,,0,
RU,165,3165,,,1.0,
2SP,165,3165,3120,,,
SE,,0,
RU,165,170,-2.0,
SE,,0,
RU,170,1170,1.0,,,
2SP,170,1170,10200,,,
SE,,0,
RU,170,2170,,1.0,,
2SP,170,2170,12960,,,
SE,,0,
RU,170,3170,,,1.0,
2SP,170,3170,3120,,,
SE,,0,
NO
NO,*******************************************************************
NO,NEXT RUN GOES UP TO THE BEGINNING OF 45- DEGREE MITERED ELBOW
NO,LENGTH OF 45-DEG. MITERED ELBOW (SEE BELOW): FC = 1.13 FT
NO,THEREFORE, LENGTH OF NEXT RUN = 2.0'-1.13' = 0.87 FT
NO,****************************************************************
NO
RU,170,175,-0.87,
NO
NO,****************************************************************
NO,**********        45 DEGREE IPS HDPE ELBOW        **************
```

```
NO,*****************************************************************
NO,THIS IS A 3-SEGMENT MITERED ELBOW.
NO,FOR 12-IN, DR-9, MITERED ELBOW (PER ISCO CATALOG):,
NO,        OUTSIDE DIAMETER, OD = 12.75 IN
NO,        MIN. WALL THICKNESS, t = 1.417 IN
NO,        INSIDE DIAMETER, ID = OD - 2t = 9.916 IN
NO,        RADIUS, R = 19.5 IN
NO,        LENGTH, FC = 13.5 IN = 1.13 FT
NO,        WT(PIPE) = 21.97 LB/FT = 1.83 LB/IN
NO,WEIGHT OF WATER FOR ID = 9.916 IN:
NO,        WT(WATER)= 33.46 LB/FT = 2.79 LB/IN
NO,WT(PIPE+WATER) = 1.83 + 2.79 = 4.62 LB/IN
NO
NO,SIF AND STRESS INDICES FOR MITERED ELBOW:
NO,        SIF = 2.0        B1 = 0.69           B2 = 1.64
NO
NO,ELBOW STARTS AT PT 175 AND ENDS AT PT 215
NO,*****************************************************************
NO
RU,175,180,-1.13,,,
CM,180,190,12.75,1.417,,19.5,11.25,4.62,
IB,180,190,2.0,.69,1.64,
CM,190,200,12.75,1.417,,19.5,22.5,4.62,
IB,190,200,2.0,.69,1.64,
CM,200,210,12.75,1.417,,19.5,,4.62,
IB,200,210,2.0,.69,1.64,
RU,210,215,-0.8,-0.8,,
NO
NO,*****************************************************************
NO,PIPE AXIS OF NEXT SECTION MAKES 45 DEGREES (CCW) WITH THE Y-AXIS
NO
NO,PIPE DROPS FROM EL. 588'-6" TO EL. 586'-0"
NO,LENGTH OF PIPING = 2.5'/COS(45)= 3.536' = 42.4 IN < 4FT
NO,APPLY ONLY ONE SET OF SOIL SPRINGS AT (APPROX.) CENTER OF SPAN
NO
NO,A 90-DEGREE ELBOW CHANGES THE PIPING ORIENTATION AT EL.586'-0"
NO
NO,LENGTH OF 90-DEG. MITERED ELBOW (SEE BELOW): FC= 24.9 IN
NO,LENGTH OF STRAIGHT PIPE REQUIRED BETWEEN THE TWO ELBOWS:
NO,             L2 = 42.4-24.9-13.5 = 4.0 IN
NO
NO,NEXT RUN REPRESENTS THE 4" STUB. SOIL SPRINGS WILL BE PLACED AT
NO,END OF THIS STUB (WHICH IS ALSO THE BEGINNING OF 90-DEGREE ELBOW)
NO,USE (APPROX.) SPRING STIFFNESS VALUES OF A 2-FT SPAN.
NO,*****************************************************************
NO
RU,215,220,-0.235,-0.235,,
NO
SE,,0,
RU,220,1220,-0.707,-0.707,,
2SP,220,1220,10200,
```

```
SE,,0,
RU,220,2220,-0.707,0.707,,
NO,*************************************************************
NO,PIPE IS INCLINED WITH RESPECT TO VERTICAL AXIS.  THEREFORE
NO,SPRING RATE IN THIS DIRECTION IS COMPUTED FROM VERTICAL (Kv)
NO,AND LATERAL (Kt) SOIL SPRING RATES AS FOLLOWS:
NO,    K = SQRT[(0.707Kv)^2 + (0.707Kt)^2]
NO,    K = SQRT[(0.707*12960)^2 +(0.707*3120)^2] = 9425 LB/IN
NO,*************************************************************
2SP,220,2220,9425,
SE,,0,
RU,220,3220,,,1.0,
2SP,220,3220,3120,,,
SE,,0,
NO,*************************************************************
NO,**********        90 DEGREE IPS HDPE ELBOW        **************
NO,*************************************************************
NO,THIS IS A 5-SEGMENT MITERED ELBOW.
NO,FOR 12-IN, DR-9, MITERED ELBOW (PER ISCO CATALOG):,
NO,        OUTSIDE DIAMETER, OD = 12.75 IN
NO,        MIN. WALL THICKNESS, t = 1.417 IN
NO,        INSIDE DIAMETER, ID = OD - 2t = 9.916 IN
NO,        RADIUS, R = 19.5 IN
NO,        LENGTH, FC = 24.9 IN = 2.075 FT
NO,        WT(PIPE) = 21.97 LB/FT = 1.83 LB/IN
NO,WEIGHT OF WATER FOR ID = 9.916 IN:
NO,        WT(WATER)= 33.46 LB/FT = 2.79 LB/IN
NO,WT(PIPE+WATER) = 1.83 + 2.79 = 4.62 LB/IN
NO
NO,SIF AND STRESS INDICES FOR MITERED ELBOW:
NO,        SIF = 2.0        B1 = 0.69           B2 = 1.64
NO
NO,ELBOW STARTS AT PT. 220 AND ENDS AT PT. 270
NO,*************************************************************
NO
RU,220,230,-1.47,-1.47,,
CM,230,235,12.75,1.417,,19.5,11.25,4.62,
IB,230,235,2.0,.69,1.64,
CM,235,240,12.75,1.417,,19.5,22.5,4.62,
IB,235,240,2.0,.69,1.64,
CM,240,245,12.75,1.417,,19.5,22.5,4.62,
IB,240,245,2.0,.69,1.64,
CM,245,250,12.75,1.417,,19.5,22.5,4.62,
IB,245,250,2.0,.69,1.64,
CM,250,260,12.75,1.417,,19.5,,4.62,
IB,250,260,2.0,.69,1.64,
RU,260,270,,,2.075,
NO
NO,*************************************************************
NO,PIPE AXIS IS NOW PARALLEL TO Z-AXIS,  X IS LATERAL DIRECTION,
NO
```

```
NO,TOTAL LENGTH OF PIPING UP TO THE NEXT (60-DEG.) ELBOW = 197.7 FT
NO
NO,LENGTH USED FOR APPLICATION OF SOIL SPRINGS AT 2FT INTERVALS
NO,(AROUND ELBOWS ON EACH END OF PIPING) = 12 FT
NO
NO,LENGTH AVAILABLE TO APPLY SPRINGS AT 10 FT INTERVALS = 185.7 FT
NO,*****************************************************************
NO,SINCE 90-DEG ELBOW LENGTH = 24.9" = 2.075 FT (APPROX.= 2FT)
NO,FOR SIMPLICITY, APPLY FISRT SET OF SOIL SPRINGS AT END OF ELBOW,
NO,AND USE STIFFNESS VALUES OBTAINED FOR A 2FT SECTION.
NO,*****************************************************************
NO
NO,PIPE AXIS IS AT ELEVATION 586'-0"; HENCE, HEIGHT OF SOIL (H) FROM,
NO,TOP OF PIPE = 7.5 FT.  THEREFORE, USE SOIL SOIL SPRING STIFFNESS
NO,VALUES OBTAINED FOR H = 7.5 FT
NO
NO,                      SPRING STIFFNESS [LB/IN]
NO,     DIRECTION       ----------------------------
NO,     OF SPRING       2FT SECTION     10FT SECTION
NO,     -------------------------------------------
NO,   LATERAL           3720        18600
NO,   VERTICAL    16920       84600
NO,   AXIAL       14760       73800
NO
NO,*****************************************************************
NO,APPLY 1st SET OF SOIL SPRINGS AT END OF 90-DEGREE MITERED ELBOW
NO,*****************************************************************
SE,,0,
RU,270,1270,1.0,,,
2SP,270,1270,3720,
SE,,0,
RU,270,2270,,1.0,,
2SP,270,2270,16920,
SE,,0,
RU,270,3270,,,1.0,
2SP,270,3270,14760,
SE,,0,
NO,*****************************************************************
NO,FOR NEXT RUN, USE LENGTH = 1.925 FT (INSTEAD OF 2FT)
NO
NO,APPLY SOIL SPRINGS AT END OF THIS RUN.  USE SPRING STIFFNESS
NO,VALUES OBTAINED FOR A 2 FT SECTION
NO,*****************************************************************
NO
RU,270,275,,,1.925,
SE,,0,
RU,275,1275,1.0,,,
2SP,275,1275,3720,
SE,,0,
RU,275,2275,,1.0,,
2SP,275,2275,16920,
```

```
SE,,0,
RU,275,3275,,,1.0,
2SP,275,3275,14760,
SE,,0,
NO,*****************************************************************
NO,APPLY 3RD SPRING SET AT END OF NEXT 2FT SECTION
NO,*****************************************************************
RU,275,280,,,2.0,
SE,,0,
RU,280,1280,1.0,,,
2SP,280,1280,3720,
SE,,0,
RU,280,2280,,1.0,,
2SP,280,2280,16920,
SE,,0,
RU,280,3280,,,1.0,
2SP,280,3280,14760,
SE,,0,
NO,*****************************************************************
NO,CHANGE SOIL SPRING SPACING FROM 2FT TO 10 FT
NO,DIVIDE AVAILABLE LENGTH AS FOLLOWS: 185.7FT = 17*10FT + 2*7.85FT
NO,*****************************************************************
NO,LENGTH OF NEXT SECTION = 7.85 FT.  SOIL SPRING STIFFNESS VALUES
NO,ARE ADJUSTED (PROPORTIONAL TO SECTION LENGTH)
NO,*****************************************************************
RU,280,285,,,7.85,
SE,,0,
RU,285,1285,1.0,,,
2SP,285,1285,14601,
SE,,0,
RU,285,2285,,1.0,,
2SP,285,2285,66411,
SE,,0,
RU,285,3285,,,1.0,
2SP,285,3285,57933,
SE,,0,
NO,*****************************************************************
NO,APPLY SPRINGS EVERY 10FT OVER THE NEXT 170FT OF PIPING SECTION
NO,*****************************************************************
RU,285,290,,,10.0,
SE,,0,
RU,290,1290,1.0,,,
2SP,290,1290,18600,
SE,,0,
RU,290,2290,,1.0,,
2SP,290,2290,84600,
SE,,0,
RU,290,3290,,,1.0,
2SP,290,3290,73800,
SE,,0,
RU,290,295,,,10.0,
```

```
SE,,0,
RU,295,1295,1.0,,,
2SP,295,1295,18600,
SE,,0,
RU,295,2295,,1.0,,
2SP,295,2295,84600,
SE,,0,
RU,295,3295,,,1.0,
2SP,295,3295,73800,
SE,,0,
RU,295,300,,,10.0,
SE,,0,
RU,300,1300,1.0,,,
2SP,300,1300,18600,
SE,,0,
RU,300,2300,,1.0,,
2SP,300,2300,84600,
SE,,0,
RU,300,3300,,,1.0,
2SP,300,3300,73800,
SE,,0,
RU,300,305,,,10.0,
SE,,0,
RU,305,1305,1.0,,,
2SP,305,1305,18600,
SE,,0,
RU,305,2305,,1.0,,
2SP,305,2305,84600,
SE,,0,
RU,305,3305,,,1.0,
2SP,305,3305,73800,
SE,,0,
NO,*****************************************************************
NO,NODE NUMBERS BETWEEN 305 AND 485 INTENTIONALLY SKIPPED
NO,*****************************************************************
RU,305,485,,,10.0,
SE,,0,
RU,485,1485,1.0,,,
2SP,485,1485,18600,
SE,,0,
RU,485,2485,,1.0,,
2SP,485,2485,84600,
SE,,0,
RU,485,3485,,,1.0,
2SP,485,3485,73800,
SE,,0,
RU,485,490,,,10.0,
SE,,0,
RU,490,1490,1.0,,,
2SP,490,1490,18600,
SE,,0,
```

```
RU,490,2490,,1.0,,
2SP,490,2490,84600,
SE,,0,
RU,490,3490,,,1.0,
2SP,490,3490,73800,
SE,,0,
RU,490,495,,,10.0,
SE,,0,
RU,495,1495,1.0,,,
2SP,495,1495,18600,
SE,,0,
RU,495,2495,,1.0,,
2SP,495,2495,84600,
SE,,0,
RU,495,3495,,,1.0,
2SP,495,3495,73800,
SE,,0,
RU,495,500,,,10.0,
SE,,0,
RU,500,1500,1.0,,,
2SP,500,1500,18600,
SE,,0,
RU,500,2500,,1.0,,
2SP,500,2500,84600,
SE,,0,
RU,500,3500,,,1.0,
2SP,500,3500,73800,
SE,,0,
RU,500,505,,,10.0,
SE,,0,
RU,505,1505,1.0,,,
2SP,505,1505,18600,
SE,,0,
RU,505,2505,,1.0,,
2SP,505,2505,84600,
SE,,0,
RU,505,3505,,,1.0,
2SP,505,3505,73800,
SE,,0,
RU,505,510,,,10.0,
SE,,0,
RU,510,1510,1.0,,,
2SP,510,1510,18600,
SE,,0,
RU,510,2510,,1.0,,
2SP,510,2510,84600,
SE,,0,
RU,510,3510,,,1.0,
2SP,510,3510,73800,
SE,,0,
RU,510,515,,,10.0,
```

```
SE,,0,
RU,515,1515,1.0,,,
2SP,515,1515,18600,
SE,,0,
RU,515,2515,,1.0,,
2SP,515,2515,84600,
SE,,0,
RU,515,3515,,,1.0,
2SP,515,3515,73800,
SE,,0,
RU,515,520,,,10.0,
SE,,0,
RU,520,1520,1.0,,,
2SP,520,1520,18600,
SE,,0,
RU,520,2520,,1.0,,
2SP,520,2520,84600,
SE,,0,
RU,520,3520,,,1.0,
2SP,520,3520,73800,
SE,,0,
RU,520,525,,,10.0,
SE,,0,
RU,525,1525,1.0,,,
2SP,525,1525,18600,
SE,,0,
RU,525,2525,,1.0,,
2SP,525,2525,84600,
SE,,0,
RU,525,3525,,,1.0,
2SP,525,3525,73800,
SE,,0,
RU,525,530,,,10.0,
SE,,0,
RU,530,1530,1.0,,,
2SP,530,1530,18600,
SE,,0,
RU,530,2530,,1.0,,
2SP,530,2530,84600,
SE,,0,
RU,530,3530,,,1.0,
2SP,530,3530,73800,
SE,,0,
RU,530,535,,,10.0,
SE,,0,
RU,535,1535,1.0,,,
2SP,535,1535,18600,
SE,,0,
RU,535,2535,,1.0,,
2SP,535,2535,84600,
SE,,0,
```

```
RU,535,3535,,,1.0,
2SP,535,3535,73800,
SE,,0,
RU,535,540,,,10.0,
SE,,0,
RU,540,1540,1.0,,,
2SP,540,1540,18600,
SE,,0,
RU,540,2540,,1.0,,
2SP,540,2540,84600,
SE,,0,
RU,540,3540,,,1.0,
2SP,540,3540,73800,
SE,,0,
RU,540,545,,,10.0,
SE,,0,
RU,545,1545,1.0,,,
2SP,545,1545,18600,
SE,,0,
RU,545,2545,,1.0,,
2SP,545,2545,84600,
SE,,0,
RU,545,3545,,,1.0,
2SP,545,3545,73800,
SE,,0,
NO,*****************************************************************
NO,NEXT PIPING SECTION IS 7.85 FT LONG.  SOIL SPRING STIFFNESS
NO,VALUES ARE ADJUSTED (PROPORTIONAL TO SECTION LENGTH)
NO,*****************************************************************
NO
RU,545,580,,,7.85,
SE,,0,
RU,580,1580,1.0,,,
2SP,580,1580,14601,
SE,,0,
RU,580,2580,,1.0,,
2SP,580,2580,66411,
SE,,0,
RU,580,3580,,,1.0,
2SP,580,3580,57933,
SE,,0,
NO,*****************************************************************
NO,CHANGE SPACING OF SOIL SPRINGS TO 2 FT (NEAR 60-DEGREE ELBOW)
NO,*****************************************************************
RU,580,585,,,2.0,
SE,,0,
RU,585,1585,1.0,,,
2SP,585,1585,3720,
SE,,0,
RU,585,2585,,1.0,,
2SP,585,2585,16920,
```

```
SE,,0,
RU,585,3585,,,1.0,
2SP,585,3585,14760,
SE,,0,
RU,585,590,,,2.0,
SE,,0,
RU,590,1590,1.0,,,
2SP,590,1590,3720,
SE,,0,
RU,590,2590,,1.0,,
2SP,590,2590,16920,
SE,,0,
RU,590,3590,,,1.0,
2SP,590,3590,14760,
SE,,0,
NO,*****************************************************************
NO,NEXT RUN GOES UP TO THE BEGINNING OF 60-DEG. MITERED ELBOW
NO,LENGTH OF 60-DEG.ELBOW (SEE BELOW BELOW) = 20.4IN = 1.7 FT
NO,THEREFORE, LENGTH OF NEXT RUN = 2.0 - 1.7 = 0.3 FT
NO,*****************************************************************
NO
RU,590,600,,,0.3,
NO
NO,*****************************************************************
NO,**********        60 DEGREE IPS HDPE ELBOW        **************
NO,*****************************************************************
NO,THIS IS A 12-IN, DR 9, 5-SEGMENT MITERED ELBOW.  THIS ELBOW IS,
NO,NOT A COMMONLY AVAILABLE STANDARD COMPONENT.  THE FOLLOWING
NO,DIMENSIONS ARE USED TO MODEL THE ELBOW:
NO,        OUTSIDE DIAMETER, OD = 12.75 IN
NO,        MIN. WALL THICKNESS, t = 1.417 IN
NO,        INSIDE DIAMETER, ID = OD - 2t = 9.916 IN
NO,        RADIUS, R = 25.9 IN
NO,        LENGTH, FC = 20.4 IN = 1.7 FT
NO,        WT(PIPE) = 21.97 LB/FT = 1.83 LB/IN
NO,WEIGHT OF WATER FOR ID = 9.916 IN:
NO,        WT(WATER)= 33.46 LB/FT = 2.79 LB/IN
NO,WT(PIPE+WATER) = 1.83 + 2.79 = 4.62 LB/IN
NO
NO,SIF AND STRESS INDICES FOR MITERED ELBOW:
NO,        SIF = 2.0        B1 = 0.69           B2 = 1.64
NO
NO,ELBOW STARTS AT NODE PT. 600 AND ENDS AT NODE PT. 640
NO,*****************************************************************
NO
RU,600,605,,,1.7,
CM,605,610,12.75,1.417,,25.9,7.5,4.62,
IB,605,610,2.0,0.69,1.64,
CM,610,615,12.75,1.417,,25.9,15.0,4.62,
IB,610,615,2.0,0.69,1.64,
CM,615,620,12.75,1.417,,25.9,15.0,4.62,
```

```
IB,615,620,2.0,0.69,1.64,
CM,620,625,12.75,1.417,,25.9,15.0,4.62,
IB,620,625,2.0,0.69,1.64,
CM,625,630,12.75,1.417,,25.9,,4.62,
IB,625,630,2.0,0.69,1.64,
RU,630,640,1.4722,,0.85,
NO
NO,*************************************************************
NO,PIPE AXIS OF NEXT SECTION MAKES 60 DEGREES (CCW) WITH Z-AXIS
NO
NO,TOTAL LENGTH OF PIPING UP TO NEXT (30-DEG.) ELBOW = 264 FT
NO
NO,APPLY SOIL SPRINGS AT 2FT INTERVALS AROUND ELBOWS (TOTAL= 12FT)
NO,AND AT 10FT INTERVALS OVER REMAINING SECTION (264 - 12 = 252 FT)
NO,*************************************************************
NO,START APPLYING SOIL SPRINGS AT 2FT INTERVALS
NO,LOCATION OF 1ST SPRING SET FROM END OF ELBOW= 2.0-1.7= 0.3 FT
NO,*************************************************************
NO
RU,640,675,0.2598,,0.15,
SE,,0,
RU,675,1675,0.866,,0.5,
2SP,675,1675,14760,
SE,,0,
RU,675,2675,,1.0,,
2SP,675,2675,16920,
SE,,0,
RU,675,3675,0.5,,-0.866,
2SP,675,3675,3720,
SE,,0,
RU,675,680,1.732,,1.0,
SE,,0,
RU,680,1680,0.866,,0.5,
2SP,680,1680,14760,
SE,,0,
RU,680,2680,,1.0,,
2SP,680,2680,16920,
SE,,0,
RU,680,3680,0.5,,-0.866,
2SP,680,3680,3720,
SE,,0,
RU,680,685,1.732,,1.0,
SE,,0,
RU,685,1685,0.866,,0.5,
2SP,685,1685,14760,
SE,,0,
RU,685,2685,,1.0,,
2SP,685,2685,16920,
SE,,0,
RU,685,3685,0.5,,-0.866,
2SP,685,3685,3720,
```

```
SE,,0,
NO,*****************************************************************
NO,CHANGE SOIL SPRING SPACING FROM 2FT TO 10 FT
NO,DIVIDE AVAILABLE LENGTH AS FOLLOWS: 252 FT= 24*10FT + 2*6FT
NO,*****************************************************************
NO
NO,*****************************************************************
NO,LENGTH OF NEXT SECTION = 6 FT.  SOIL SPRING STIFFNESS VALUES
NO,ARE ADJUSTED (PROPORTIONAL TO SECTION LENGTH)
NO,*****************************************************************
NO
RU,685,690,5.196,,3.0,
SE,,0,
RU,690,1690,0.866,,0.5,
2SP,690,1690,44280,
SE,,0,
RU,690,2690,,1.0,,
2SP,690,2690,50760,
SE,,0,
RU,690,3690,0.5,,-0.866,
2SP,690,3690,11160,
SE,,0,
NO,*****************************************************************
NO,APPLY SPRINGS AT 10FT INTERVALS OVER THE NEXT 240 FT SECTION
NO,*****************************************************************
RU,690,695,8.66,,5.0,
SE,,0,
RU,695,1695,0.866,,0.5,
2SP,695,1695,73800,
SE,,0,
RU,695,2695,,1.0,,
2SP,695,2695,84600,
SE,,0,
RU,695,3695,0.5,,-0.866,
2SP,695,3695,18600,
SE,,0,
RU,695,700,8.66,,5.0,
SE,,0,
RU,700,1700,0.866,,0.5,
2SP,700,1700,73800,
SE,,0,
RU,700,2700,,1.0,,
2SP,700,2700,84600,
SE,,0,
RU,700,3700,0.5,,-0.866,
2SP,700,3700,18600,
SE,,0,
RU,700,705,8.66,,5.0,
SE,,0,
RU,705,1705,0.866,,0.5,
2SP,705,1705,73800,
```

```
SE,,0,
RU,705,2705,,1.0,,
2SP,705,2705,84600,
SE,,0,
RU,705,3705,0.5,,-0.866,
2SP,705,3705,18600,
SE,,0,
RU,705,710,8.66,,5.0,
SE,,0,
RU,710,1710,0.866,,0.5,
2SP,710,1710,73800,
SE,,0,
RU,710,2710,,1.0,,
2SP,710,2710,84600,
SE,,0,
RU,710,3710,0.5,,-0.866,
2SP,710,3710,18600,
SE,,0,
RU,710,715,8.66,,5.0,
SE,,0,
RU,715,1715,0.866,,0.5,
2SP,715,1715,73800,
SE,,0,
RU,715,2715,,1.0,,
2SP,715,2715,84600,
SE,,0,
RU,715,3715,0.5,,-0.866,
2SP,715,3715,18600,
SE,,0,
RU,715,720,8.66,,5.0,
SE,,0,
RU,720,1720,0.866,,0.5,
2SP,720,1720,73800,
SE,,0,
RU,720,2720,,1.0,,
2SP,720,2720,84600,
SE,,0,
RU,720,3720,0.5,,-0.866,
2SP,720,3720,18600,
SE,,0,
RU,720,725,8.66,,5.0,
SE,,0,
RU,725,1725,0.866,,0.5,
2SP,725,1725,73800,
SE,,0,
RU,725,2725,,1.0,,
2SP,725,2725,84600,
SE,,0,
RU,725,3725,0.5,,-0.866,
2SP,725,3725,18600,
SE,,0,
```

```
RU,725,730,8.66,,5.0,
SE,,0,
RU,730,1730,0.866,,0.5,
2SP,730,1730,73800,
SE,,0,
RU,730,2730,,1.0,,
2SP,730,2730,84600,
SE,,0,
RU,730,3730,0.5,,-0.866,
2SP,730,3730,18600,
SE,,0,
RU,730,735,8.66,,5.0,
SE,,0,
RU,735,1735,0.866,,0.5,
2SP,735,1735,73800,
SE,,0,
RU,735,2735,,1.0,,
2SP,735,2735,84600,
SE,,0,
RU,735,3735,0.5,,-0.866,
2SP,735,3735,18600,
SE,,0,
RU,735,740,8.66,,5.0,
SE,,0,
RU,740,1740,0.866,,0.5,
2SP,740,1740,73800,
SE,,0,
RU,740,2740,,1.0,,
2SP,740,2740,84600,
SE,,0,
RU,740,3740,0.5,,-0.866,
2SP,740,3740,18600,
SE,,0,
RU,740,745,8.66,,5.0,
SE,,0,
RU,745,1745,0.866,,0.5,
2SP,745,1745,73800,
SE,,0,
RU,745,2745,,1.0,,
2SP,745,2745,84600,
SE,,0,
RU,745,3745,0.5,,-0.866,
2SP,745,3745,18600,
SE,,0,
RU,745,750,8.66,,5.0,
SE,,0,
RU,750,1750,0.866,,0.5,
2SP,750,1750,73800,
SE,,0,
RU,750,2750,,1.0,,
2SP,750,2750,84600,
```

```
SE,,0,
RU,750,3750,0.5,,-0.866,
2SP,750,3750,18600,
SE,,0,
RU,750,755,8.66,,5.0,
SE,,0,
RU,755,1755,0.866,,0.5,
2SP,755,1755,73800,
SE,,0,
RU,755,2755,,1.0,,
2SP,755,2755,84600,
SE,,0,
RU,755,3755,0.5,,-0.866,
2SP,755,3755,18600,
SE,,0,
RU,755,760,8.66,,5.0,
SE,,0,
RU,760,1760,0.866,,0.5,
2SP,760,1760,73800,
SE,,0,
RU,760,2760,,1.0,,
2SP,760,2760,84600,
SE,,0,
RU,760,3760,0.5,,-0.866,
2SP,760,3760,18600,
SE,,0,
RU,760,765,8.66,,5.0,
SE,,0,
RU,765,1765,0.866,,0.5,
2SP,765,1765,73800,
SE,,0,
RU,765,2765,,1.0,,
2SP,765,2765,84600,
SE,,0,
RU,765,3765,0.5,,-0.866,
2SP,765,3765,18600,
SE,,0,
RU,765,770,8.66,,5.0,
SE,,0,
RU,770,1770,0.866,,0.5,
2SP,770,1770,73800,
SE,,0,
RU,770,2770,,1.0,,
2SP,770,2770,84600,
SE,,0,
RU,770,3770,0.5,,-0.866,
2SP,770,3770,18600,
SE,,0,
RU,770,775,8.66,,5.0,
SE,,0,
RU,775,1775,0.866,,0.5,
```

```
2SP,775,1775,73800,
SE,,0,
RU,775,2775,,1.0,,
2SP,775,2775,84600,
SE,,0,
RU,775,3775,0.5,,-0.866,
2SP,775,3775,18600,
SE,,0,
RU,775,780,8.66,,5.0,
SE,,0,
RU,780,1780,0.866,,0.5,
2SP,780,1780,73800,
SE,,0,
RU,780,2780,,1.0,,
2SP,780,2780,84600,
SE,,0,
RU,780,3780,0.5,,-0.866,
2SP,780,3780,18600,
SE,,0,
RU,780,785,8.66,,5.0,
SE,,0,
RU,785,1785,0.866,,0.5,
2SP,785,1785,73800,
SE,,0,
RU,785,2785,,1.0,,
2SP,785,2785,84600,
SE,,0,
RU,785,3785,0.5,,-0.866,
2SP,785,3785,18600,
SE,,0,
RU,785,790,8.66,,5.0,
SE,,0,
RU,790,1790,0.866,,0.5,
2SP,790,1790,73800,
SE,,0,
RU,790,2790,,1.0,,
2SP,790,2790,84600,
SE,,0,
RU,790,3790,0.5,,-0.866,
2SP,790,3790,18600,
SE,,0,
RU,790,795,8.66,,5.0,
SE,,0,
RU,795,1795,0.866,,0.5,
2SP,795,1795,73800,
SE,,0,
RU,795,2795,,1.0,,
2SP,795,2795,84600,
SE,,0,
RU,795,3795,0.5,,-0.866,
2SP,795,3795,18600,
```

```
SE,,0,
RU,795,800,8.66,,5.0,
SE,,0,
RU,800,1800,0.866,,0.5,
2SP,800,1800,73800,
SE,,0,
RU,800,2800,,1.0,,
2SP,800,2800,84600,
SE,,0,
RU,800,3800,0.5,,-0.866,
2SP,800,3800,18600,
SE,,0,
RU,800,805,8.66,,5.0,
SE,,0,
RU,805,1805,0.866,,0.5,
2SP,805,1805,73800,
SE,,0,
RU,805,2805,,1.0,,
2SP,805,2805,84600,
SE,,0,
RU,805,3805,0.5,,-0.866,
2SP,805,3805,18600,
SE,,0,
RU,805,810,8.66,,5.0,
SE,,0,
RU,810,1810,0.866,,0.5,
2SP,810,1810,73800,
SE,,0,
RU,810,2810,,1.0,,
2SP,810,2810,84600,
SE,,0,
RU,810,3810,0.5,,-0.866,
2SP,810,3810,18600,
SE,,0,
NO,*****************************************************************
NO,NEXT PIPING SECTION IS 6 FT LONG.  SOIL SPRING STIFFNESS
NO,VALUES ARE ADJUSTED (PROPORTIONAL TO SECTION LENGTH).
NO,*****************************************************************
RU,810,820,5.196,,3.0,
SE,,,0,
RU,820,1820,0.866,,0.5,
2SP,820,1820,44280,
SE,,0,
RU,820,2820,,1.0,,
2SP,820,2820,50760,
SE,,0,
RU,820,3820,0.5,,-0.866,
2SP,820,3820,11160,
SE,,0,
NO,*****************************************************************
NO,  APPLY SOIL SPRINGS AT 2 FT INTERVALS (AROUND 30-DEG. ELBOW)
```

```
NO,*****************************************************************
RU,820,825,1.732,,1.0,
SE,,0,
RU,825,1825,0.866,,0.5,
2SP,825,1825,14760,
SE,,0,
RU,825,2825,,1.0,,
2SP,825,2825,16920,
SE,,0,
RU,825,3825,0.5,,-0.866,
2SP,825,3825,3720,
SE,,0,
RU,825,830,1.732,,1.0,
SE,,0,
RU,830,1830,0.866,,0.5,
2SP,830,1830,14760,
SE,,0,
RU,830,2830,,1.0,,
2SP,830,2830,16920,
SE,,0,
RU,830,3830,0.5,,-0.866,
2SP,830,3830,3720,
SE,,0,
NO,*****************************************************************
NO,NEXT RUN GOES UP TO THE BEGINNING OF 30-DEG. MITERED ELBOW
NO,LENGTH OF ELBOW (SEE BELOW) = 12.4IN = 1.03FT
NO,THEREFORE, LENGTH OF NEXT RUN = 2.0 - 1.03 = 0.97 FT
NO,USE: SIN(30) = 0.5  AND COS(30) = 0.866
NO,*****************************************************************
NO
RU,830,840,0.84002,,0.485,
NO
NO,*****************************************************************
NO,**********        30 DEGREE IPS HDPE ELBOW        **************
NO,*****************************************************************
NO,THIS IS A 12-IN, DR 9, 3-SEGMENT MITERED ELBOW.  THIS IS NOT A,
NO,COMMONLY AVAILABLE STANDARD COMPONENT.  THE FOLLOWING DIMENSIONS
NO,ARE USED TO MODEL THE ELBOW:
NO,        OUTSIDE DIAMETER, OD = 12.75 IN
NO,        MIN. WALL THICKNESS, t = 1.417 IN
NO,        INSIDE DIAMETER, ID = OD - 2t = 9.916 IN
NO,        RADIUS, R = 25.9 IN
NO,        LENGTH, FC = 12.4 IN = 1.03 FT
NO,        WT(PIPE) = 21.97 LB/FT = 1.83 LB/IN
NO,WEIGHT OF WATER FOR ID = 9.916 IN:
NO,        WT(WATER)= 33.46 LB/FT = 2.79 LB/IN
NO,WT(PIPE+WATER) = 1.83 + 2.79 = 4.62 LB/IN
NO
NO,SIF AND STRESS INDICES FOR MITERED ELBOW:
NO,        SIF = 2.0        B1 = 0.69           B2 = 1.64
NO
```

```
NO,ELBOW STARTS AT NODE PT. 840 AND ENDS AT NODE PT. 5000
NO,*************************************************************
NO
RU,840,850,0.89198,,0.515,
CM,850,860,12.75,1.417,,25.9,7.5,4.62,
IB,850,860,2.0,0.69,1.64,
CM,860,870,12.75,1.417,,25.9,15.0,4.62,
IB,860,870,2.0,0.69,1.64,
CM,870,880,12.75,1.417,,25.9,,4.62,
IB,870,880,2.0,0.69,1.64,
RU,880,5000,1.03,,,
NO
NO,*************************************************************
NO,PIPE AXIS OF NEXT SECTION IS PARALLEL TO THE X-AXIS
NO,*************************************************************
NO,LENGTH OF PIPING PARALLEL TO X-AXIS = 98.2 FT
NO
NO,APPLY SOIL SPRINGS AT 2FT INTERVALS AROUND 30-DEGREE ELBOW
NO,LOCATION OF 1ST SPRING SET= 2.0'-1.03'= 0.97' FROM END OF ELBOW
NO,*************************************************************
NO
RU,5000,5010,0.97,,,
SE,,0,
RU,5010,15010,1.0,,,
2SP,5010,15010,14760,,,
SE,,0,
RU,5010,25010,,1.0,,
2SP,5010,25010,16920,,,
SE,,0,
RU,5010,35010,,,1.0,
2SP,5010,35010,3720,,,
SE,,0,
RU,5010,5020,2.0,,,
SE,,0,
RU,5020,15020,1.0,,,
2SP,5020,15020,14760,,,
SE,,0,
RU,5020,25020,,1.0,,
2SP,5020,25020,16920,,,
SE,,0,
RU,5020,35020,,,1.0,
2SP,5020,35020,3720,,,
SE,,0,
RU,5020,5030,2.0,,,
SE,,0,
RU,5030,15030,1.0,,,
2SP,5030,15030,14760,,,
SE,,0,
RU,5030,25030,,1.0,,
2SP,5030,25030,16920,,,
SE,,0,
```

```
RU,5030,35030,,,1.0,
2SP,5030,35030,3720,
SE,,0,
NO,*****************************************************************
NO,CHANGE SOIL SPRING SPACING FROM 2 FT TO 10 FT
NO,AVAILABLE LENGTH = 98.2 FT - 12 FT = 86.2 FT
NO,DIVIODE THIS LENGTH FOLLOWS: 86.2 FT = 7*10FT + 2*8.1FT
NO,*****************************************************************
NO
NO,*****************************************************************
NO,NO,LENGTH OF NEXT PIPING SECTION = 8.1 FT.  SOIL SPRING STIFFNESS
NO,VALUES ARE ADJUSTED (PROPORTIONAL TO SECTION LENGTH).
NO,*****************************************************************
RU,5030,5040,8.1,,,
SE,,0,
RU,5040,15040,1.0,,,
2SP,5040,15040,59778,,,
SE,,0,
RU,5040,25040,,1.0,,
2SP,5040,25040,68526,,,
SE,,0,
RU,5040,35040,,,1.0,
2SP,5040,35040,15066,
SE,,0,
NO,*****************************************************************
NO,APPLY SPRINGS AT 10FT INTERVALS OVER THE NEXT 70 FT SECTION
NO,*****************************************************************
RU,5040,5045,10.0,,,
SE,,0,
RU,5045,15045,1.0,,,
2SP,5045,15045,73800,,,
SE,,0,
RU,5045,25045,,1.0,,
2SP,5045,25045,84600,,,
SE,,0,
RU,5045,35045,,,1.0,
2SP,5045,35045,18600,
SE,,0,
RU,5045,5050,10.0,,,
SE,,0,
RU,5050,15050,1.0,,,
2SP,5050,15050,73800,,,
SE,,0,
RU,5050,25050,,1.0,,
2SP,5050,25050,84600,,,
SE,,0,
RU,5050,35050,,,1.0,
2SP,5050,35050,18600,
SE,,0,
RU,5050,5055,10.0,,,
SE,,0,
```

```
RU,5055,15055,1.0,,,
2SP,5055,15055,73800,,,
SE,,0,
RU,5055,25055,,1.0,,
2SP,5055,25055,84600,,,
SE,,0,
RU,5055,35055,,,1.0,
2SP,5055,35055,18600,
SE,,0,
RU,5055,5060,10.0,,,
SE,,0,
RU,5060,15060,1.0,,,
2SP,5060,15060,73800,,,
SE,,0,
RU,5060,25060,,1.0,,
2SP,5060,25060,84600,,,
SE,,0,
RU,5060,35060,,,1.0,
2SP,5060,35060,18600,
SE,,0,
RU,5060,5070,10.0,,,
SE,,0,
RU,5070,15070,1.0,,,
2SP,5070,15070,73800,,,
SE,,0,
RU,5070,25070,,1.0,,
2SP,5070,25070,84600,,,
SE,,0,
RU,5070,35070,,,1.0,
2SP,5070,35070,18600,
SE,,0,
RU,5070,5080,10.0,,,
SE,,0,
RU,5080,15080,1.0,,,
2SP,5080,15080,73800,,,
SE,,0,
RU,5080,25080,,1.0,,
2SP,5080,25080,84600,,,
SE,,0,
RU,5080,35080,,,1.0,
2SP,5080,35080,18600,
SE,,0,
RU,5080,5090,10.0,,,
SE,,0,
RU,5090,15090,1.0,,,
2SP,5090,15090,73800,,,
SE,,0,
RU,5090,25090,,1.0,,
2SP,5090,25090,84600,,,
SE,,0,
RU,5090,35090,,,1.0,
```

```
2SP,5090,35090,18600,
SE,,0,
NO,*************************************************************
NO,LENGTH OF NEXT PIPING SECTION = 8.1 FT.  SOIL SPRING STIFFNESS
NO,VALUES ARE ADJUSTED (PROPORTIONAL TO SECTION LENGTH)
NO,*************************************************************
NO
RU,5090,5100,8.1,,,
SE,,0,
RU,5100,15100,1.0,,,
2SP,5100,15100,59778,,,
SE,,0,
RU,5100,25100,,1.0,,
2SP,5100,25100,68526,,,
SE,,0,
RU,5100,35100,,,1.0,
2SP,5100,35100,15066,
SE,,0,
NO,*****************************************************************
NO,START APPLYING SOIL SPRINGS AT 2 FT INTERVALS
NO,*****************************************************************
NO
RU,5100,5110,2.0,,,
SE,,0,
RU,5110,15110,1.0,,,
2SP,5110,15110,14760,,,
SE,,0,
RU,5110,25110,,1.0,,
2SP,5110,25110,16920,,,
SE,,0,
RU,5110,35110,,,1.0,
2SP,5110,35110,3720,,,
SE,,0,
RU,5110,5120,2.0,,,
SE,,0,
RU,5120,15120,1.0,,,
2SP,5120,15120,14760,,,
SE,,0,
RU,5120,25120,,1.0,,
2SP,5120,25120,16920,,,
SE,,0,
RU,5120,35120,,,1.0,
2SP,5120,35120,3720,,,
SE,,0,
NO,*****************************************************************
NO,NEXT RUN GOES UP TO THE BEGINNING OF 45- DEGREE MITERED ELBOW
NO,LENGTH OF 45-DEG. MITERED ELBOW (SEE BELOW): FC = 1.13 FT
NO,THEREFORE, LENGTH OF NEXT RUN = 2.0'-1.13' = 0.87 FT
NO,*************************************************************
NO
RU,5120,5130,0.87,,,
```

```
NO
NO,*****************************************************************
NO,**********        45 DEGREE IPS HDPE ELBOW        **************
NO,*****************************************************************
NO,THIS IS A 3-SEGMENT MITERED ELBOW.  ITS PROPERTIES ARE AS LISTED
NO,EARLIER.
NO
NO,PIPE ELEVATION = 586'-0"
NO
NO,ELBOW STARTS AT PT. 5130 AND ENDS AT PT. 5160
NO,*****************************************************************
NO
RU,5130,5135,1.13,,,
CM,5135,5140,12.75,1.417,,19.5,11.25,4.62,
IB,5135,5140,2.0,.69,1.64,
CM,5140,5145,12.75,1.417,,19.5,22.5,4.62,
IB,5140,5145,2.0,.69,1.64,
CM,5145,5150,12.75,1.417,,19.5,,4.62,
IB,5145,5150,2.0,.69,1.64,
NO
NO,*****************************************************************
NO,THE STRAIGHT PIPES THAT ARE PARALLEL TO X-AXIS AND CONNECTED BY
NO,THE TWO 45-DEGREE MITERED ELBOWS ARE AT DIFFERENET ELEVATIONS
NO,(ONE AT EL.586'-0" AND THE OTHER AT 587'-6")
NO
NO,THEREFORE, DISTANCE IN Y-DIRECTION (Ly) BETWEEN THE TWO STRAIGHT,
NO,PIPES IS OBTAINED AS FOLLOWS: Ly = 587'-6"-586'-0" = 1.5 FT
NO
NO,DISTANCE BETWEEN THOSE SAME PIPES IN Z-DIRECTION: Lz = 2.5 FT
NO
NO,Let Lyz = Perpendicular distance between pipes
NO,          Lyz = SQRT(1.5^2+2.5^2)= 2.9 FT
NO
NO,DISTANCE IN X-DIRECTION (Lx) BETWEEN THE ENDS OF SAME PIPES:
NO,          Lx = Lyz = 2.9 FT
NO
NO,Distance between centers of the two elbows connecting the pipes:
NO,          L = Lyz/cos(45) = 4.1 FT
NO
NO,Direction cosines of line connecting the two 45-degree elbows:
NO,        X-DIRECTION = cos(45) = 0.707
NO,        Y-DIRECTION = Ly/L = 1.5/4.1 = 0.366
NO,        Z-DIRECTION = Lz/L = 2.5/4.1 = 0.610
NO
NO,Direction cosines of line perpedicular to and in same plane with
NO,The above line are:
NO
NO,        X-DIRECTION = -COS(45) = -0.707
NO,        Y-DIRECTION = Ly/L = 1.5/4.1 = 0.366
NO,        Z-DIRECTION = Lz/L = 2.5/4.1 = 0.610
NO
```

```
NO,Direction cosines of line perpendicular to plane containing the
NO,Above two lines are:
NO
NO,        X-DIRECTION = COS(90) = 0.0
NO,        Y-DIRECTION = Lz/Lyz = 2.5/2.9 = 0.862
NO,        Z-DIRECTION = -Ly/Lyz = -1.5/2.9 = -0.517
NO
NO,TOTAL LENGTH OF THIS PIPING SECTION = 4.1 FT.  IT IS SUFFICIENT
NO,TO APPLY ONE SET OF SOIL SPRINGS AT MIDSPAN
NO,*************************************************************
NO,NEXT RUN GOES TO END OF 1st ELBOW. (LENGTH OF ELBOW = 1.13FT)
NO,             delta X = 0.707*1.13 = 0.79891
NO,             delta Y = 0.366*1.13 = 0.41358
NO,             delta Z = 0.610*1.13 = 0.68930
NO,*************************************************************
NO
RU,5150,5160,0.79891,0.41358,0.68930,
NO
NO,*************************************************************
NO,A PIPE STUB OF LENGTH = 4.1-2*1.13 = 1.84 FT IS NEEDED BETWEEN
NO,THE TWO ELBOWS.
NO
NO,SOIL SPRINGS ARE APPLIED AT MIDSPAN (0.92 FT FROM ELBOW END)
NO,             delta X = 0.707*0.92 = 0.65044
NO,             delta Y = 0.366*0.92 = 0.33672
NO,             delta Z = 0.610*0.92 = 0.56120
NO,*************************************************************
NO
RU,5160,5170,0.65044,0.33672,0.56120,
SE,,0,
RU,5170,15170,0.707,0.366,0.610,
2SP,5170,15170,14760,,,
SE,,0,
RU,5170,25170,,0.862,-0.517,
NO,************************************************************
NO,SPRING RATE IN THIS DIRECTION IS OBTAINED FROM VERTICAL (Kv)
NO,AND LATERAL (Kt) SOIL SPRING RATES AS FOLLOWS:
NO,K = SQRT[(0.862 Kv)^2 + (0.517 Kt)^2]
NO,K = SQRT[(0.862*16920)^2 + (0.517*3720)^2] = 14711 LB/IN
NO,************************************************************
2SP,5170,25170,14711,,,
SE,,0,
RU,5170,35170,-0.707,0.366,0.610,
2SP,5170,35170,3720,,,
SE,,0,
NO,*************************************************************
NO,NEXT RUN GOES TO BEGINNING OF 2nd ELBOW. (RUN LENGTH = 0.92 FT)
NO,             delta X = 0.707*0.92 = 0.65044
NO,             delta Y = 0.366*0.92 = 0.33672
NO,             delta Z = 0.610*0.92 = 0.56120
NO,*************************************************************
```

```
NO
RU,5170,5180,0.65044,0.33672,0.56120,
NO,*
NO,*****************************************************************
NO,**********        45 DEGREE IPS HDPE ELBOW        **************
NO,*****************************************************************
NO,THIS IS A 3-SEGMENT MITERED ELBOW.  ITS PROPERTIES ARE AS LISTED
NO,EARLIER.
NO
NO,MTTERED ELBOW STARTS AT PT. 5180 AND ENDS AT PT 5210
NO,*****************************************************************
NO
RU,5180,5185,0.79891,0.41358,0.68930,
CM,5185,5190,12.75,1.417,,19.5,11.25,4.62,
IB,5185,5190,2.0,.69,1.64,
CM,5190,5195,12.75,1.417,,19.5,22.5,4.62,
IB,5190,5195,2.0,.69,1.64,
CM,5195,5200,12.75,1.417,,19.5,,4.62,
IB,5195,5200,2.0,.69,1.64,
RU,5200,5210,1.13,,,
NO
NO,*****************************************************************
NO,AXIS OF PIPING IS NOW PARALLEL TO X-AXIS
NO
NO,PIPE CENTERLINE IS AT ELEVATION 587'-6".  HEIGHT OF SOIL ABOVE
NO,TOP OF PIPE = 6 FT.  THEREFORE, USE SPRING STIFFNESS VALUES
NO,OBTAINED FOR H = 6 FT.
NO
NO,                      SPRING STIFFNESS [LB/IN]
NO,     DIRECTION       ----------------------------
NO,     OF SPRING       2FT SECTION     10FT SECTION
NO,     -----------------------------------------
NO,   LATERAL           3360        16800
NO,   VERTICAL    14640       73200
NO,   AXIAL       12000       60000
NO
NO,TOTAL LENGTH PIPING PARALLEL TO X-AXIS= 262'-98.2'-2.9'=160.9 FT
NO,*****************************************************************
NO,START APPLYING SOIL SPRINGS AT 2FT INTERVALS
NO,LOCATION OF 1ST SPRING SET IS 0.87 FT FROM END OF ELBOW
NO,*****************************************************************
NO
RU,5210,5215,0.87,,,
SE,,0,
RU,5215,15215,1.0,,,
2SP,5215,15215,12000,,,
SE,,0,
RU,5215,25215,,1.0,,
2SP,5215,25215,14640,,,
SE,,0,
RU,5215,35215,,,1.0,
```

```
2SP,5215,35215,3360,
SE,,0,
NO,*************************************************************
NO,APPLY SECOND AND THIRD SPRING SETS IN NEXT TWO 2FT-SECTIONS
NO,*************************************************************
RU,5215,5220,2.0,,,
SE,,0,
RU,5220,15220,1.0,,,
2SP,5220,15220,12000,,,
SE,,0,
RU,5220,25220,,1.0,,
2SP,5220,25220,14640,,,
SE,,0,
RU,5220,35220,,,1.0,
2SP,5220,35220,3360,
SE,,0,
RU,5220,5225,2.0,,,
SE,,0,
RU,5225,15225,1.0,,,
2SP,5225,15225,12000,,,
SE,,0,
RU,5225,25225,,1.0,,
2SP,5225,25225,14640,,,
SE,,0,
RU,5225,35225,,,1.0,
2SP,5225,35225,3360,
SE,,0,
NO,*************************************************************
NO,APPLY SOIL SPRINGS AT 10 FT INTERVALS
NO
NO,TOTAL LENGTH OF PIPE PARALLEL TO X-AXIS = 160.9 FT
NO,LENGTH AVAILABLE TO APPLY SOIL SPRINGS AT 10 FT INTERVALS:
NO,              160.9 FT - 12 FT = 148.9 FT
NO,DIVIDE THIS LENGTH AS FOLLOWS: 148.9FT = 13*10FT + 2*9.45FT
NO,*************************************************************
NO
NO,*************************************************************
NO,LENGTH OF NEXT PIPING SECTION = 9.45 FT.  SOIL SPRING STIFFNESS
NO,VALUES ARE ADJUSTED (PROPORTIONAL TO SECTION LENGTH)
NO,*************************************************************
NO
RU,5225,5230,9.45,,,
SE,,0,
RU,5230,15230,1.0,,,
2SP,5230,15230,56700,,,
SE,,0,
RU,5230,25230,,1.0,,
2SP,5230,25230,69174,,,
SE,,0,
RU,5230,35230,,,1.0,
2SP,5230,35230,15876,
```

```
SE,,0,
NO,*************************************************************
NO,APPLY SPRINGS AT 10FT INTERVALS OVER THE NEXT 130 FT SECTION
NO,*************************************************************
NO
RU,5230,5235,10.0,,,
SE,,0,
RU,5235,15235,1.0,,,
2SP,5235,15235,60000,,,
SE,,0,
RU,5235,25235,,1.0,,
2SP,5235,25235,73200,,,
SE,,0,
RU,5235,35235,,,1.0,
2SP,5235,35235,16800,
SE,,0,
RU,5235,5240,10.0,,,
SE,,0,
RU,5240,15240,1.0,,,
2SP,5240,15240,60000,,,
SE,,0,
RU,5240,25240,,1.0,,
2SP,5240,25240,73200,,,
SE,,0,
RU,5240,35240,,,1.0,
2SP,5240,35240,16800,
SE,,0,
RU,5240,5245,10.0,,,
SE,,0,
RU,5245,15245,1.0,,,
2SP,5245,15245,60000,,,
SE,,0,
RU,5245,25245,,1.0,,
2SP,5245,25245,73200,,,
SE,,0,
RU,5245,35245,,,1.0,
2SP,5245,35245,16800,
SE,,0,
RU,5245,5250,10.0,,,
SE,,0,
RU,5250,15250,1.0,,,
2SP,5250,15250,60000,,,
SE,,0,
RU,5250,25250,,1.0,,
2SP,5250,25250,73200,,,
SE,,0,
RU,5250,35250,,,1.0,
2SP,5250,35250,16800,
SE,,0,
RU,5250,5255,10.0,,,
SE,,0,
```

```
RU,5255,15255,1.0,,,
2SP,5255,15255,60000,,,
SE,,0,
RU,5255,25255,,1.0,,
2SP,5255,25255,73200,,,
SE,,0,
RU,5255,35255,,,1.0,
2SP,5255,35255,16800,
SE,,0,
RU,5255,5260,10.0,,,
SE,,0,
RU,5260,15260,1.0,,,
2SP,5260,15260,60000,,,
SE,,0,
RU,5260,25260,,1.0,,
2SP,5260,25260,73200,,,
SE,,0,
RU,5260,35260,,,1.0,
2SP,5260,35260,16800,
SE,,0,
RU,5260,5265,10.0,,,
SE,,0,
RU,5265,15265,1.0,,,
2SP,5265,15265,60000,,,
SE,,0,
RU,5265,25265,,1.0,,
2SP,5265,25265,73200,,,
SE,,0,
RU,5265,35265,,,1.0,
2SP,5265,35265,16800,
SE,,0,
RU,5265,5270,10.0,,,
SE,,0,
RU,5270,15270,1.0,,,
2SP,5270,15270,60000,,,
SE,,0,
RU,5270,25270,,1.0,,
2SP,5270,25270,73200,,,
SE,,0,
RU,5270,35270,,,1.0,
2SP,5270,35270,16800,
SE,,0,
RU,5270,5275,10.0,,,
SE,,0,
RU,5275,15275,1.0,,,
2SP,5275,15275,60000,,,
SE,,0,
RU,5275,25275,,1.0,,
2SP,5275,25275,73200,,,
SE,,0,
RU,5275,35275,,,1.0,
```

```
2SP,5275,35275,16800,
SE,,0,
RU,5275,5280,10,,,
SE,,0,
RU,5280,15280,1.0,,,
2SP,5280,15280,60000,,,
SE,,0,
RU,5280,25280,,1.0,,
2SP,5280,25280,73200,,,
SE,,0,
RU,5280,35280,,,1.0,
2SP,5280,35280,16800,
SE,,0,
RU,5280,5285,10,,,
SE,,0,
RU,5285,15285,1.0,,,
2SP,5285,15285,60000,,,
SE,,0,
RU,5285,25285,,1.0,,
2SP,5285,25285,73200,,,
SE,,0,
RU,5285,35285,,,1.0,
2SP,5285,35285,16800,
SE,,0,
RU,5285,5290,10,,,
SE,,0,
RU,5290,15290,1.0,,,
2SP,5290,15290,60000,,,
SE,,0,
RU,5290,25290,,1.0,,
2SP,5290,25290,73200,,,
SE,,0,
RU,5290,35290,,,1.0,
2SP,5290,35290,16800,,,
SE,,0,
RU,5290,5295,10,,,
SE,,0,
RU,5295,15295,1.0,,,
2SP,5295,15295,60000,,,
SE,,0,
RU,5295,25295,,1.0,,
2SP,5295,25295,73200,,,
SE,,0,
RU,5295,35295,,,1.0,
2SP,5295,35295,16800,,,
SE,,0,
NO,*****************************************************************
NO,LENGTH OF NEXT PIPING SECTION = 9.45 FT.  SOIL SPRING STIFFNESS
NO,VALUES ARE ADJUSTED (PROPORTIONAL TO SECTION LENGTH)
NO,*****************************************************************
NO
```

```
RU,5295,5300,9.45,,,
SE,,0,
RU,5300,15300,1.0,,,
2SP,5300,15300,56700,,,
SE,,0,
RU,5300,25300,,1.0,,
2SP,5300,25300,69174,,,
SE,,0,
RU,5300,35300,,,1.0,
2SP,5300,35300,15876,
SE,,0,
NO,*****************************************************************
NO,START APPLYING SOIL SPRINGS AT 2FT INTERVALS
NO,*****************************************************************
NO
RU,5300,5305,2.0,,,
SE,,0,
RU,5305,15305,1.0,,,
2SP,5305,15305,12000,,,
SE,,0,
RU,5305,25305,,1.0,,
2SP,5305,25305,14640,,,
SE,,0,
RU,5305,35305,,,1.0,
2SP,5305,35305,3360,,,
SE,,0,
NO,*****************************************************************
NO,LENGTH OF 90-DEGREE ELBOW 24.9 IN > 2FT.  HENCE, ELBOW STARTS IN,
NO,NEXT 2FT SECTION (23.1 IN = 1.925FT FROM CURRENT NODE POINT)
NO
NO,NEXT RUN GOES UP TO BEGINNING OF ELBOW.  SINCE RUN LENGTH IS
NO,APPROX. = 2FT, FOR SIMPLICITY, APPLY SOIL SPRINGS AT END OF THIS
NO,RUN AND USE STIFFNESS VALUES OBTAINED FOR A 2FT SECTION.
NO,*****************************************************************
NO
RU,5305,5310,1.925,,,
SE,,0,
RU,5310,15310,1.0,,,
2SP,5310,15310,12000,,,
SE,,0,
RU,5310,25310,,1.0,,
2SP,5310,25310,14640,,,
SE,,0,
RU,5310,35310,,,1.0,
2SP,5310,35310,3360,,,
SE,,0,
NO
NO,*****************************************************************
NO,**********        90 DEGREE IPS HDPE ELBOW        **************
NO,*****************************************************************
NO,THIS IS A 5-SEGMENT MITERED ELBOW.  ITS PROPERTIES ARE AS LISTED
```

```
NO,EARLIER.
NO
NO,ELBOW STARTS AT PT. 5310 AND ENDS AT PT. 5410
NO,*************************************************************
NO
RU,5310,5350,2.075,,,
CM,5350,5360,12.75,1.417,,19.5,11.25,4.62,
IB,5350,5360,2.0,.69,1.64,
CM,5360,5370,12.75,1.417,,19.5,22.5,4.62,
IB,5360,5370,2.0,.69,1.64,
CM,5370,5380,12.75,1.417,,19.5,22.5,4.62,
IB,5370,5380,2.0,.69,1.64,
CM,5380,5390,12.75,1.417,,19.5,22.5,4.62,
IB,5380,5390,2.0,.69,1.64,
CM,5390,5400,12.75,1.417,,19.5,,4.62,
IB,5390,5400,2.0,.69,1.64,
RU,5400,5410,,,-2.075,
NO
NO,*************************************************************
NO,PIPE AXIS IS NOW PARALLEL TO Z-AXIS,  X IS LATERAL DIRECTION,
NO
NO,TOTAL LENGTH OF PIPING PARALLEL TO Z-AXIS = 25.1 FT
NO,LENGTH OF STEEL PIPING COMPONENTS:
NO,                     90-DEGREE ELBOW = 12"
NO,                     FLANGE LENGTH = 4.5"
NO,                     TOTAL LENGTH = 16.5" = 1.38 FT
NO,LENGTH FOR APPLYING SOIL SPRINGS AT 2FT INTERVALS = 12 FT
NO,LENGTH AVAILABLE TO APPLY SPRINGS AT 10 FT INTERVALS:
NO,        L = 25.1-12-1.38 = 11.7 FT
NO,*************************************************************
NO,SINCE 90-DEG ELBOW LENGTH = 24.9"(APPROX.= 2FT), FOR SIMPLICITY
NO,APPLY FISRT SET OF SOIL SPRINGS AT END OF MITERED ELBOW AND USE
NO,STIFFNESS VALUES OBTAINED FOR A 2FT SECTION.
NO,*************************************************************
SE,,0,
RU,5410,15410,1.0,,,
2SP,5410,15410,3360,,,
SE,,0,
RU,5410,25410,,1.0,,
2SP,5410,25410,14640,,,
SE,,0,
RU,5410,35410,,,1.0,
2SP,5410,35410,12000,,,
SE,,0,
NO,*************************************************************
NO,FOR NEXT RUN, USE LENGTH = 1.925 FT (INSTEAD OF 2FT)
NO
NO,APPLY SOIL SPRINGS AT END OF THIS RUN.  USE SPRING STIFFNESS
NO,VALUES OBTAINED FOR A 2 FT SECTION
NO,*************************************************************
NO
```

```
RU,5410,5420,,,-1.925,
SE,,0,
RU,5420,15420,1.0,,,
2SP,5420,15420,3360,,,
SE,,0,
RU,5420,25420,,1.0,,
2SP,5420,25420,14640,,,
SE,,0,
RU,5420,35420,,,1.0,
2SP,5420,35420,12000,,,
SE,,0,
RU,5420,5430,,,-2.0,
SE,,0,
RU,5430,15430,1.0,,,
2SP,5430,15430,3360,,,
SE,,0,
RU,5430,25430,,1.0,,
2SP,5430,25430,14640,,,
SE,,0,
RU,5430,35430,,,1.0,
2SP,5430,35430,12000,,,
SE,,0,
NO,*****************************************************************
NO,DIVIDE THE 11.7 FT LONG PIPE SECTION INTO TWO 5.85 FT SECTIONS
NO,*****************************************************************
NO
NO,*****************************************************************
NO,LENGTH OF NEXT PIPING SECTION = 5.85 FT.  SOIL SPRING STIFFNESS
NO,VALUES ARE ADJUSTED (PROPORTIONAL TO SECTION LENGTH)
NO,*****************************************************************
RU,5430,5435,,,-5.85,
SE,,0,
RU,5435,15435,1.0,,,
2SP,5435,15435,9828,,,
SE,,0,
RU,5435,25435,,1.0,,
2SP,5435,25435,42822,,,
SE,,0,
RU,5435,35435,,,1.0,
2SP,5435,35435,35100,,,
SE,,0,
NO,*****************************************************************
NO,LENGTH OF NEXT PIPING SECTION = 5.85 FT.  SOIL SPRING STIFFNESS
NO,VALUES ARE ADJUSTED (PROPORTIONAL TO SECTION LENGTH)
NO,*****************************************************************
RU,5435,5440,,,-5.85,
SE,,0,
RU,5440,15440,1.0,,,
2SP,5440,15440,9828,,,
SE,,0,
RU,5440,25440,,1.0,,
```

```
2SP,5440,25440,42822,,,
SE,,0,
RU,5440,35440,,,1.0,
2SP,5440,35440,35100,,,
SE,,0,
NO,*****************************************************************
NO,APPLY SPRINGS AT 2 FT INTERVALS
NO,*****************************************************************
NO
RU,5440,5450,,,-2.0,
SE,,0,
RU,5450,15450,1.0,,,
2SP,5450,15450,3360,,,
SE,,0,
RU,5450,25450,,1.0,,
2SP,5450,25450,14640,,,
SE,,0,
RU,5450,35450,,,1.0,
2SP,5450,35450,12000,,,
SE,,0,
RU,5450,5460,,,-2.0,
SE,,0,
RU,5460,15460,1.0,,,
2SP,5460,15460,3360,,,
SE,,0,
RU,5460,25460,,1.0,,
2SP,5460,25460,14640,,,
SE,,0,
RU,5460,35460,,,1.0,
2SP,5460,35460,12000,,,
SE,,0,
NO,*******************************************************************
NO,NEXT 2FT SECTION CONTAINS FLANGED END OF HDPE PIPE
NO
NO,LENGTH OF PIPE UP TO THE BEGINNING OF FLANGE ADAPTER:
NO,    2.0FT - 1.0 FT = 1.0 FT
NO,*****************************************************************(***
NO
RU,5460,5470,,,-1.0,
NO
NO,*****************************************************************
NO,INSTALL A FLANGE ADAPTER WITH STEEL BACKUP RING MOUNTED ON IT
NO
NO,PROPERTIES OF ADAPTER AND RING ARE AS LISTED EARLIER (NEAR THE
NO,BEGINNING OF THIS MODEL)
NO,*******************************************************************
NO
RU,5470,5480,,,-0.75,
NOTE,IV=WNFL,END=FLG
1V,5480,5490,,,-0.25,15.5,1.159,14.5,
SE,,0,
```

```
NO
NO,*****************************************************************
NO,                        CHANGE TO STEEL PIPE
NO,*****************************************************************
NO,12-IN, SCH. 40 Cr-Mo STEEL PIPE PROPERTIES:,
NO,     OUTSIDE DIAMETER = 12.75 IN
NO,     WALL THICKNESS = 0.375 IN
NO,     WT(PIPE)= 49.6 LB/FT = 4.13 LB/IN
NO,     WT(WATER) = 49.0 LB/FT= 4.08 LB/IN
NO,     WT(PIPE+WATER) = (49.6+49.0)/12 = 8.22 LB/IN
NO,*****************************************************************
NO
PI,5490,5500,12.75,0.375,28.0,8.1,0.01,8.22,
NO
NO,*****************************************************************
NO,INSTALL A 90-DEGREE ELBOW WITH A FLANGE WELDED ON ONE END
NO,*****************************************************************
NO,FOR 12-IN SHORT RADIUS 90-DEG. ELBOW (BASED ON LADISH CATALOG):
NO,      LENGTH = 12 IN                T = 0.375 IN
NO,      RADIUS = 12 IN                WT(ELBOW)= 80 LB
NO,      WT(ELBOW+WATER)= 129.0 LB/FT = 10.75 LB/IN
NO,*****************************************************************
NO,PROPERTIES OF 12-IN, 150-LB WELDING NECK FLANGE ARE AS LISTED,
NO,EARLIER
NO,*****************************************************************
NO,90-DEG. ELBOW WILL BE CONNECTED TO A 12-IN PIPE COMING OFF THE
NO,42-IN HEADER MAKING 22.5 DEGREES WITH THE VERTICAL (Y) AXIS
NO,USE:  SIN (22.5) = 0.383  AND  COS(22.5) = 0.924
NO,*****************************************************************
NO
NOTE,IV=WNFL,BEG=FLG
1V,5490,5500,,,-0.38,14.375,0.375,23.6,
RU,5500,5510,,,-1.01,
EL,5510,5520,12.75,0.375,,12.0,,10.75,
RU,5520,5530,0.38683,-0.93324,,
NO
NO,*****************************************************************
NO,A 12-IN PIPE, WITH A FLANGE ON ONE END, IS WELDED TO END OF ELBOW,
NO,LENGTH OF PIPE = 13 IN = 1.1 FT
NO,*****************************************************************
NO
RU,5530,5535,0.4213,-1.0164,
NOTE,IV=WNFL,END=FLG
1V,5535,5540,0.14554,-0.35112,,14.375,0.375,23.6,
SE,,0,
NO,*****************************************************************
NO,CHANGE PIPE MATERIAL TO SA-106
NO,*****************************************************************
NO
PI,5540,5550,12.75,0.375,27.9,6.07,0.01,8.22,
NO
```

```
NO,*****************************************************************
NO,WELD A FLANGE TO A 12-IN PIPE AND ATTACH PIPE TO 42-IN HEADER
NO,LENGTH OF PIPE = 15 IN = 1.25 FT
NO,*****************************************************************
NO
NOTE,IV=WNFL,BEG=FLG
1V,5540,5550,0.1454,-0.3511,,14.375,0.375,23.6,
RU,5550,5560,0.47875,-1.155,,
NO
NO,*****************************************************************
NO,A WELDOLET IS USED BETWEEN 12-IN PIPE AND 42-IN HEADER
NO,APPLY SIF=4.87 FOR WELDOLET AT JUNCTION POINT (CENTER OF 42" PIPE)
NO,*****************************************************************
NO,42-IN DIAMETER PIPE PROPERTIES:
NO,    OD = 42 IN = 3.5 FT                WALL THICKNESS = 0.500 IN
NO,    WT(PIPE) = 221.6LB/FT              WT(WATER) = 571.7LB/FT
NO,    WT(PIPE+WATER)= 66.1LB/IN
NO,*****************************************************************
SE,,0,
RU,5560,5600,0.67025,-1.617,
CH,5560,5600,42.,0.500,,,,66.1,
JB,5560,5600,4.87,
NO
EN,,0
EX
NO
NO,***************************** END OF RUN *************************
NO
EXECUTE
NO
NO,LOADING CASE NO. 10
NO,CODE= ASME, YEAR = 1989, CLASS = 3
NO,FOR 1989 ASME CODE, CLASS 3 ANALYSIS = CLASS 2 ANALYSIS
NO,DESIGN PRESSURE = 60 PSI, PEAK PRESSURE = 25 PSI
NO,SA-106 GRADE B CARBON STEEL PROPERTIES:
NO,       Sc = 15000 PSI              Sh = 15000 PSI
NO,       Sy = 35000 PSI              POISSON RATIO = 0.3
NO,       Ec = 27.9E+06 PSI
NO,HDPE 50-YEAR DURATION PROPERTIES:
NO,       Sc = 800 PSI                Sh = 800 PSI
NO,       Sy = 2500 PSI               POISSON RATIO = 0.45
NO,       Ec = 0.028E+06 PSI
NO,SB-690/SB-675 Cr-Mo STEEL PROPERTIES:
NO,       Sc = 23100 PSI              Sh = 22200 PSI
NO,       Sy = 45000 PSI              POISSON RATIO = 0.3
NO,       Ec = 28E+06 PSI
NO
CL,,,3.0,1989,1,
CO,3,1,10,60,25,23100,22200,
MA,,,45000,,0.3,,,28.0,
CL,130,133,3.0,60,25,800,800,
```

```
MA,130,133,2500,,0.45,,,0.028,
CL,5490,5500,3.0,60,25,23100,22200,
MA,5490,5500,45000,,0.3,,,28.0,
CL,5540,5550,3.0,60,25,15000,15000,
MA,5540,5550,35000,,0.3,,,27.9,
DEADWEIGHT,,,,-1,,
XP,-27,20,
EN,,,
NO
EXECUTE
NO,*************** THERMAL ANALYSIS AT MIN TEMP = 32 F
NO,LOADING CASE NO. 21
NO,Delta T = 32 F - 55 F = -23 F
NO,PROPERTIES OF HDPE, Cr-Mo AND CARBON STEEL REMAIN SAME AS FOR DW CASE,
NO
CL,,,3.0,1989,1,
CO,3,0,21,60,25,23100,22200,
MA,,,45000,,0.3,,,28.0,
CL,130,133,3.0,60,25,800,800,
MA,130,133,2500,,0.45,,,0.028,
CL,5490,5500,3.0,60,25,23100,22200,
MA,5490,5500,45000,,0.3,,,28.0,
CL,5540,5550,3.0,60,25,15000,15000,
MA,5540,5550,35000,,0.3,,,27.9,
CH,100,105,10.75,0.365,28.0,8.1,-23.,6.22,
CH,130,133,12.75,1.159,0.028,90.,-23.,4.62,
CH,5490,5500,12.75,0.375,28.0,8.1,-23.,8.22,
CH,5540,5550,12.75,0.375,27.9,6.07,-23,8.22,
TH,,0,
EN,,,
EXECUTE
NO,*************** THERMAL ANALYSIS AT MAX TEMP = 140 F
NO,Delta T = 140 F - 55 F = 85 F
NO,CARBON STEEL AND Cr-Mo STEEL PROPERTIES ARE SAME AS DEADWEIGHT CASE
NO
NO,HDPE 50-YEAR DURATION PROPERTIES:
NO,       Sc = 800 PSI                 Sh = 430 PSI
NO,       Sy = 2500 PSI                POISSON RATIO = 0.45
NO,       Ec = 0.012E+06 PSI
CL,,,3.0,1989,1,
CO,3,0,22,60,25,23100,22200,
MA,,,45000,,0.3,,,28.0,
CL,130,133,3.0,60,25,800,430,
MA,130,133,2500,,0.45,,,0.012,
CL,5490,5500,3.0,60,25,23100,22200,
MA,5490,5500,45000,,0.3,,,28.0,
CL,5540,5550,3.0,60,25,15000,15000,
MA,5540,5550,35000,,0.3,,,27.9,
CH,100,105,10.75,0.365,28.0,8.1,85,6.22,
CH,130,133,12.75,1.159,0.012,90.,85,4.62,
CH,5490,5500,12.75,0.375,28.0,8.1,85,8.22,
```

```
CH,5540,5550,12.75,0.375,27.9,6.07,85,8.22,
TH,,0,
EN,,,
EXECUTE
NO,*************** THERMAL ANALYSIS AT MIN TEMP = 32 F
NO,DELTA T=32 F - 55 F = -23F
NO,CARBON STEEL AND Cr-Mo STEEL PROPERTIES ARE SAME AS DEADWEIGHT CASE
NO,HDPE 10 YEAR DURATION PROPERTIES
NO,       Sc=840 PSI                    Sh=840 PSI
NO,       Sy=2500 PSI                   POISSON RATIO=0.45
NO,       Ec=0.032E+6 PSI
CL,,,3.0,1989,1,
CO,3,0,23,60,25,23100,22200,
MA,,,45000,,0.3,,,28.0,
CL,130,133,3.0,60,25,840,840,
MA,130,133,2500,,0.45,,,0.032,
CL,5490,5500,3.0,60,25,23100,22200,
MA,5490,5500,45000,,0.3,,,28.0,
CL,5540,5550,3.0,60,25,15000,15000,
MA,5540,5550,35000,,0.3,,,27.9,
CH,100,105,10.75,0.365,28.0,8.1,-23,6.22,
CH,130,133,12.75,1.159,0.032,90,-23,4.62,
CH,5490,5500,12.75,0.375,28.0,8.1,-23,8.22,
CH,5540,5550,12.75,0.375,27.9,6.07,-23,8.22,
TH,,0,
EN,,,
EXECUTE
NO,*************** THERMAL ANALYSIS AT MAX TEMP = 140 F
NO,DELTA T = 140 F - 55 F = 85 F
NO,CARBON STEEL AND Cr.-Mo STEEL PROPERTIES ARE SAME AS DEADWEIGHT CASE
NO,HDPE 10 YEAR DURATION PROPERTIES
NO,       Sc=840 PSI                    Sh=430 PSI
NO,       Sy=2500 PSI                   POISSON=0.45
NO,       Ec=0.013E+6 PSI
CL,,,3.0,1989,1,
CO,3,0,24,60,25,23100,22200,
MA,,,45000,,0.3,,,28.0,
CL,130,133,3.0,60,25,840,430,
MA,130,133,2500,,0.45,,,0.013,
CL,5490,5500,3.0,60,25,23100,22200,
MA,5490,5500,45000,,0.3,,,28.0,
CL,5540,5550,3.0,60,25,15000,15000,
MA,5540,5550,35000,,0.3,,,27.9,
CH,100,105,10.75,0.365,28.0,8.1,85,6.22,
CH,130,133,12.75,1.159,0.013,90,85,4.62,
CH,5490,5500,12.75,0.375,28.0,8.1,85,8.22,
CH,5550,5560,12.75,0.375,27.9,6.07,85,8.22,
TH,,0,
EN,,,
NO
EXECUTE
```

```
NO,************** THERMAL ANALYSIS AT MIN TEMP = 32 F
NO,DELTA T = 32 F - 55 F = -23 F
NO
NO,CARBON STEEL AND Cr.-Mo STEEL PROPERTIES ARE SAME AS DEADWEIGHT CASE
NO,HDPE 1000 HOUR DURATION PROPERTIES
NO,       Sc=840 PSI                    Sh=840 PSI
NO,       Sy=2500 PSI                   POISSON RATIO=0.45
NO,       Ec=0.044E+6 PSI
CL,,,3.0,1989,1,
CO,3,0,25,60,25,23100,22200,
MA,,,45000,,0.3,,,28.0,
CL,130,133,3.0,60,25,840,840,
MA,130,133,2500,,0.45,,,0.044,
CL,5490,5500,3.0,60,25,23100,22200,
MA,5490,5500,45000,,0.3,,,28.0,
CL,5540,5550,3.0,60,25,15000,15000,
MA,5540,5550,35000,,0.3,,,27.9,
CH,100,105,10.75,0.365,28.0,8.1,-23,6.22,
CH,130,133,12.75,1.159,0.044,90,-23,4.62,
CH,5490,5500,12.75,0.375,28.0,8.1,-23,8.22,
CH,5550,5560,12.75,0.375,27.9,6.07,-23,8.22,
TH,,0,
EN,,,
NO
EXECUTE
NO,************** THERMAL ANALYSIS AT MAX TEMP = 140 F
NO,DELTA T = 140 F - 55 F = 85 F
NO,CARBON STEEL AND Cr-Mo STEEL PROPERTIES ARE SAME AS DW CASE
NO,HDPE 1000 HR DURATION PROPERTIES
NO,       Sc=840 PSI                    Sh=430 PSI
NO,       Sy=2500 PSI                   POISSON RATIO=0.45
NO,       Ec=0.018+6 PSI
CL,,,3.0,1989,1,
CO,3,0,26,60,25,23100,22200,
MA,,,45000,,0.3,,,28.0,
CL,130,133,3.0,60,25,840,430,
MA,130,133,2500,,0.45,,,0.018,
CL,5490,5500,3.0,60,25,23100,22200,
MA,5490,5500,45000,,0.3,,,28.0,
CL,5540,5550,3.0,60,25,15000,15000,
MA,5540,5550,35000,,0.3,,,27.9,
CH,100,105,10.75,0.365,28.0,8.1,85,6.22,
CH,130,133,12.75,1.159,0.018,90,85,4.62,
CH,5490,5500,12.75,0.375,28.0,8.1,85,8.22,
CH,5550,5560,12.75,0.375,27.9,6.07,85,8.22,
TH,,0,
EN,,,
EXECUTE
NO,**************** THERMAL ANALYSIS AT 65 F
NO,LOADING CASE NO. 30
NO
```

```
NO,Delta T = 10 F
NO,CARBON STEEL AND Cr.-Mo STEEL PROPERTIES ARE SAME AS DEADWEIGHT CASE
NO
NO,**** FOR HDPE, USE SHORT-TERM (< 10 HRS) ELASTIC MODULUS VALUE:,
NO,       Sc = 1200 PSI                Sh = 1200 PSI
NO,       Sy = 2500 PSI                POISSON RATIO = 0.35
NO,       Ec = 0.110E+06 PSI
CL,,,3.0,1989,1,
CO,3,0,30,60,25,23100,22200,
MA,,,45000,,0.3,,,28.0,
CL,130,133,3.0,60,25,1200,1200,
MA,130,133,2500,,0.35,,,0.110,
CL,5490,5500,3.0,60,25,23100,22200,
MA,5490,5500,45000,,0.3,,,28.0,
CL,5540,5550,3.0,60,25,15000,15000,
MA,5540,5550,35000,,0.3,,,27.9,
CH,100,105,10.75,0.365,28.0,8.1,10.,6.22,
CH,130,133,12.75,1.159,0.110,90.,10.,4.62,
CH,5490,5500,12.75,0.375,28.0,8.1,10.,8.22,
CH,5550,5560,12.75,0.375,27.9,6.07,10,8.22,
TH,,0,
EN,,0,
NO
EXECUTE
NO,******************** COMBINE LOAD CASES 21 AND 22
NO,METHOD OF LOAD COMBINATION = ABSOLUTE VALUE OF RANGE
NO,LOADING CASE NO. 27
CL,,,3.0,1989,3,
NE,7,,21,22,,,,27,
OU,4,,27,
EN,,,
EXECUTE
NO,******************** COMBINE LOAD CASES 23 AND 24
NO,METHOD OF LOAD COMBINATION = ABSOLUTE VALUE OF RANGE
NO,LOADING CASE NO. 28
CL,,,3.0,1989,3,
NE,7,,23,24,,,,28,
OU,4,,28,
EN,,0,
EXECUTE
NO,******************* COMBINE LOAD CASES 25 AND 26
NO,METHOD OF LOAD COMBINATION = ABSOLUTE VALUE OF RANGE
NO,LOADING CASE NO. 29
CL,,,3.0,1989,3,
NE,7,,25,26,,,,29,
OU,4,,29,
EN,,0,
EXECUTE
NO
NO,THESE LOADS REPRESENT SSE SEISMIC LOAD RANGES
NO,METHOD OF COMPUTING = ABSOLUTE LOAD CASE 30 + ABSOLUTE LOAD CASE 30
```

```
NO,LOADING CASE NO. 31
CL,,,3.0,1989,3,
NE,3,,30,30,,,,31,
OU,4,,31,
EN,,0,
EXECUTE
NO
NO,THESE LOADS REPRESENT OBE SEISMIC LOAD RANGES
NO,METHOD OF COMPUTING = FACTORING --> 0.5333*LOAD CASE 31
NO,LOADING CASE NO. 32
CL,,,3.0,1989,3,
NE,8,,31,0.5333,,,,32,
OU,4,,32,
EN,,0,
EXECUTE
NO
NO,METHOD OF COMBINATION = ADD ABSOLUTE VALUES OF EACH LOAD
NO
NO
CL,,,3.0,1989,3,
NE,3,,21,32,,,,40,
NE,3,,22,32,,,,41,
OU,1,,40,
OU,1,,41,
EN,,0,
EXECUTE
NO,****** SEARCH FOR HIGHEST LOADS FROM LOAD CASES 27, 40,
NO,LOAD CASE NO. 45
CL,,,3.0,1989,3,
NE,9,,27,40,41,,,45,
OU,1,,45,
EN,,0,
EXECUTE
NO
CL,,,3.0,1989,1,
EQUATION,8,,10,
EQUATION,9,,10,
EQUATION,10,,,27,
EN,,0,
EXECUTE
NO
CL,,,3.0,1989,2,
EQUATION,8,,10,
EQUATION,9,,10,
EQUATION,10,,,45,
EN,,0,
EXECUTE
NO
CL,,,3.0,1989,4,
EQUATION,10,,,31,
EN,,0,
```

OUTPUT FILE

Output file on CD-Rom