EPRI | ELECTRIC POWER RESEARCH INSTITUTE

Materials Reliability Program: Pressurized Water Reactor Internals Inspection and Evaluation Guidelines (MRP-227-Rev. 0)

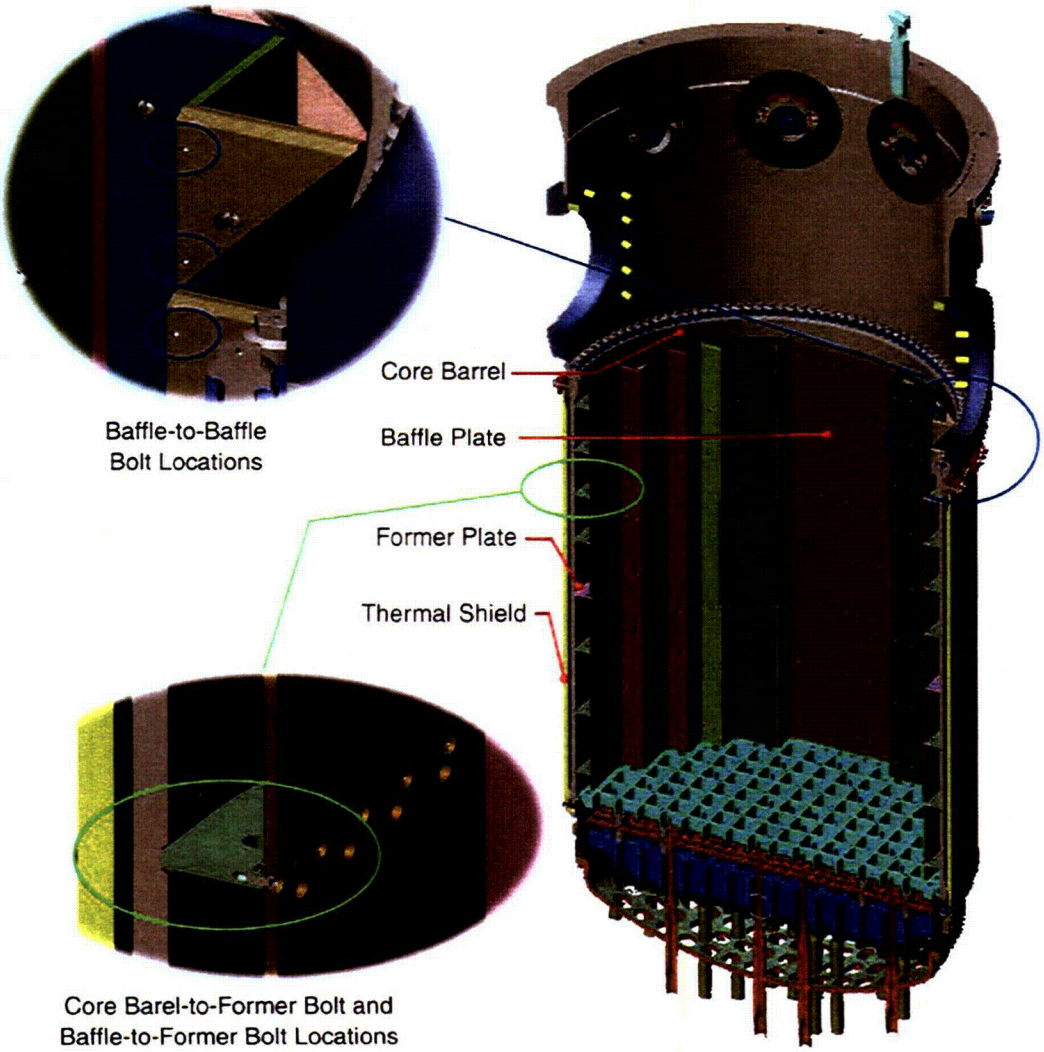

Materials Reliability Program: Pressurized Water Reactor Internals Inspection and Evaluation Guidelines (MRP-227-Rev. 0)

1016596

Final Report, December 2008

Non-Proprietary Version for NRC
(Proprietary Version submitted to NRC under Affidavit)

EPRI Project Manager
A. Demma

ELECTRIC POWER RESEARCH INSTITUTE
3420 Hillview Avenue, Palo Alto, California 94304-1338 • PO Box 10412, Palo Alto, California 94303-0813 • USA
800.313.3774 • 650.855.2121 • askepri@epri.com • www.epri.com

DISCLAIMER OF WARRANTIES AND LIMITATION OF LIABILITIES

ORGANIZATION(S) THAT PREPARED THIS DOCUMENT

MRP Reactor Internals Inspection and Evaluation Guidelines Core Group

NOTE

For further information about EPRI, call the EPRI Customer Assistance Center at 800.313.3774 or e-mail askepri@epri.com.

CITATIONS

This report was prepared by

MRP Reactor Internals Inspection and Evaluation Guidelines Core Group

Tim Wells, *Chairman*	Southern Nuclear Operating Co.
Cheryl Boggess	Westinghouse Electric Company, LLC
Alexander Butcavage	Constellation Energy
Anne Demma, *Project Manager*	EPRI
Steve Fyfitch	AREVA NP Inc.
Glenn Gardner	Dominion Nuclear Connecticut
Charles Griffin	Progress Energy, Inc.
Steve Herman	AREVA NP Inc.
Mark Joseph	Florida Power & Light Co.
Randy Lott	Westinghouse Electric Company, LLC
John Lindberg	EPRI
Patrick Minogue	Westinghouse Electric Company, LLC
Robert Nickell, *Principal Investigator*	Anatech Corp.
Jack Spanner	EPRI
Chuck Welty	EPRI
David Whitaker	Duke Energy
Hongqing Xu	AREVA NP Inc.

This report describes research sponsored by the Electric Power Research Institute (EPRI).

The report is a corporate document that should be cited in the literature in the following manner:

Materials Reliability Program: Pressurized Water Reactor Internals Inspection and Evaluation Guidelines (MRP-227-Rev. 0). EPRI, Palo Alto, CA: 2008. 1016596.

REPORT SUMMARY

The Materials Reliability Program (MRP) developed inspection and evaluation (I&E) guidelines for managing long-term aging of pressurized water reactor (PWR) reactor internals. Specifically, the guidelines are applicable to reactor internal structural components; they do not address fuel assemblies, reactivity control assemblies, or welded attachments to the reactor vessel.

Background

Demonstrating that effects of aging degradation in PWR internals are adequately managed is essential for maintaining a healthy fleet and assuring continued functionality of reactor internals. As a work product of the MRP, these I&E guidelines are intended to support that demonstration, with requirements for inspections to detect effects of aging degradation. The program to develop these guidelines has been underway for almost a decade, organized around a framework and strategy for managing effects of aging in PWR internals, dependent on a substantial database of material data and supporting evaluation results. The goal of this development was primarily to support license renewal, but the guidelines are intended to apply to the current license period as well.

Objectives

To provide generic I&E guidelines for each PWR design for use by individual plant owners in preparing and executing their PWR internals aging management programs (AMPs).

Approach

An experienced team consisting of utility and nuclear steam supply system (NSSS) vendors and EPRI experts, representing a broad spectrum of reactor design, operations, and materials expertise, worked on the project. The team reviewed available data and industry experience on materials aging to develop a systematic approach for identifying and prioritizing inspection requirements for internals. The key sequential steps in the process included the following:

- development of screening criteria, with susceptibility levels for the eight postulated aging mechanisms relevant to reactor internals and their effects;
- initial component screening and categorization, using susceptibility levels and FMECA (failure modes, effects, and criticality assessment) to identify the relative ranking of components;
- functionality assessment of degradation for components and assemblies of components; and
- aging management strategy development combining results of the functionality assessment with component accessibility, operating experience, existing evaluations, and prior examination results to determine the appropriate aging management methodology, baseline examination timing, and the need for and the timing of subsequent inspections.

Through this process, reactor internals for all three PWR designs were evaluated, and appropriate recommendations for aging management actions specific to each component were provided.

Results

One "mandatory," three "needed," and one "good practice" implementation requirements have been developed. These requirements provide the framework and details for individual utility reactor internals AMPs.

EPRI Perspective

The guidelines are based on a broad set of assumptions about plant operation, which encompass the range of current plant conditions for the U.S. fleet of PWRs. The aging management strategies reports (MRP-231 and MRP-232) provide the basis for these guidelines. The functional evaluations that support the guidelines were based on representative configurations and operational histories, which were generally conservative, but not necessarily bounding in every parameter. These assumptions are a conservative representation of U.S. PWR operating plants, all of which implemented low-leakage core-loading patterns early in their operating life. The recommendations are, thus, applicable to all U.S. PWR operating plants as of May 2007 for the three designs identified. These guidelines also are considered applicable to plants that have replaced components or component assemblies; however, alternatives can be technically justified.

The Inspection Standard for PWR internals (MRP-228) is the companion document to these I&E guidelines and provides examination requirement standards for components listed in the guidelines.

Keywords

Pressurized water reactor
Reactor internals
Inspection guidelines
Aging management
License renewal
Material reliability program

MRP REACTOR INTERNALS FOCUS GROUP

Glenn Gardner, *Chairman*	Dominion Nuclear Connecticut
Alexander Butcavage	Constellation Energy
Cédric Pokor	Electricité de France
Steve Forsha	Florida Power & Light Co.
Michael Garner	STP Nuclear Operating Company
Charles Griffin	Progress Energy, Inc.
Gay Haliburton	Tennessee Valley Authority (TVA)
Ramakant (Ram) Indap	Arizona Public Service Co.
Mark Joseph	Florida Power & Light Co.
Bruce Mickatavage	Indiana Michigan Power Co.
Gary Payne	Entergy Operations Services, Inc.
Jean Smith	Exelon Generation, LLC
Dennis Weakland	First Energy Corp.
Tim Wells	Southern Nuclear Operating Co.
David Whitaker	Duke Energy

LIST OF ACRONYMS

AMP	Aging Management Program
ASME	American Society of Mechanical Engineers
B&PV	Boiler & Pressure Vessel
B&W	Babcock & Wilcox
BB	Baffle-to-Baffle
BMI	Bottom Mounted Instrumentation
BWR	Boiling Water Reactor
BWRVIP	Boiling Water Reactor Vessel & Internals Project
CAP	Corrective Action Program
CASS	Cast Austenitic Stainless Steel
CB	Core Barrel
CBF	Core Barrel-to-Former
CE	Combustion Engineering
CEA	Control Element Assembly
CFR	Code of Federal Regulations
CR-3	Crystal River Unit 3
CRGT	Control Rod Guide Tube
CSA	Core Support Assembly
CSS	Core Support Shield
DB	Davis-Besse
E	Expansion, I&E Guidelines Component Group
ECP	Electro-Chemical Potential
EFPY	Effective Full Power Years
EPFM	Elastic-Plastic Fracture Mechanics
EPRI	Electric Power Research Institute
ET	Electromagnetic Testing (Eddy Current)
EVT	Enhanced Visual Testing (a Visual NDE Method that includes EVT-1)

FB	Baffle-to-Former
FD	Flow Distributor
FMECA	Failure Mode, Effects, and Criticality Analysis
GALL	Generic Aging Lessons Learned
HWC	Hydrogen Water Chemistry
I&E	Inspection and Evaluation
IASCC	Irradiation-Assisted Stress Corrosion Cracking
ICI	In-Core Instrumentation
IGSCC	Intergranular SCC
IMI	Incore Monitoring Instrumentation
IP	Issue Program
ISI	Inservice Inspection
ISR	Irradiation-Enhanced Stress Relaxation
ITG	Issue Task Group
JOBB	Joint Owners Baffle Bolt
LCB	Lower Core Barrel
LCP	Lower Core Plate
LEFM	Linear Elastic Fracture Mechanics
LTS	Lower Thermal Shield
LOCA	Loss-of-Coolant-Accident
MRP	Materials Reliability Program
N	No Additional Measures, I&E Guidelines Component Group
NDE	Non-Destructive Examination
NEI	Nuclear Energy Institute
NRC	U. S. Nuclear Regulatory Commission
NSSS	Nuclear Steam Supply System
OBE	Operating Basis Earthquake
ONS	Oconee Nuclear Station (ONS-1, ONS-2, and ONS-3)
P	Primary, I&E Guidelines Component Group
PH	Precipitation-Hardenable (Heat Treatment)
PMMP	Preventive Maintenance Management Program
PWR	Pressurized Water Reactor
PWROG	Pressurized Water Reactor Owners Group

PWSCC	Primary Water SCC
QA	Quality Assurance
RCS	Reactor Coolant System
RI-FG	Reactor Internals Focus Group
RI-ITG	Reactor Internals Issue Task Group
SCC	Stress Corrosion Cracking
SS	Stainless Steel
SSE	Safe Shutdown Earthquake
SSHT	Surveillance Specimen Holder Tube
TLAA	Time-Limited Aging Analysis
TMI-1	Three Mile Island Unit 1
UCB	Upper Core Barrel
UCP	Upper Core Plate
USP	Upper Support Plate
UT	Ultrasonic Testing (a Volumetric NDE Method)
UTS	Upper Thermal Shield
VT	Visual Testing (a Visual NDE Method that Includes VT-1 and VT-3)
X	Existing, I&E Guidelines Component Group
XL	Extra-Long Westinghouse Fuel

CONTENTS

LIST OF FIGURES

LIST OF TABLES

1
EXECUTIVE SUMMARY

Content deleted - EPRI/MRP Proprietary Information.

Content deleted - EPRI/MRP Proprietary Information

2
INTRODUCTION

2.1 Background

Content deleted - EPRI/MRP Proprietary Information.

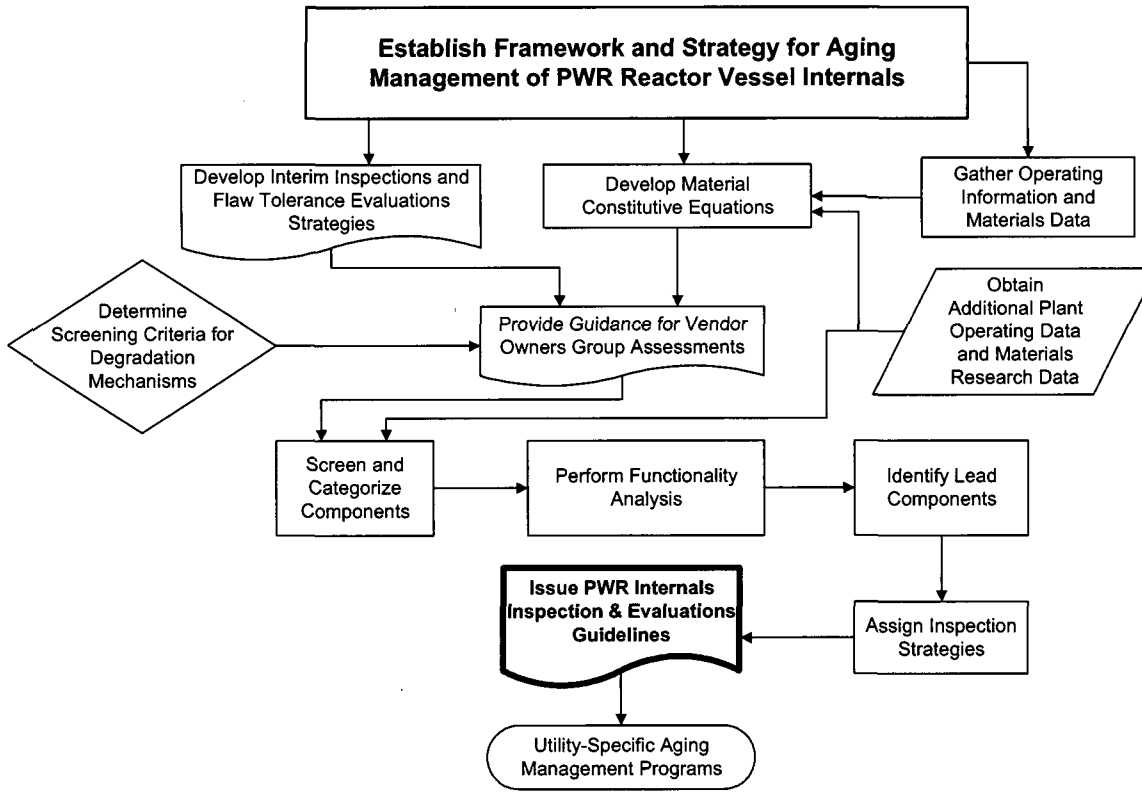

Figure 2-1
MRP framework and strategy for aging management of PWR internals

2.2 Aging Management Strategy Development

Content deleted - EPRI/MRP Proprietary Information.

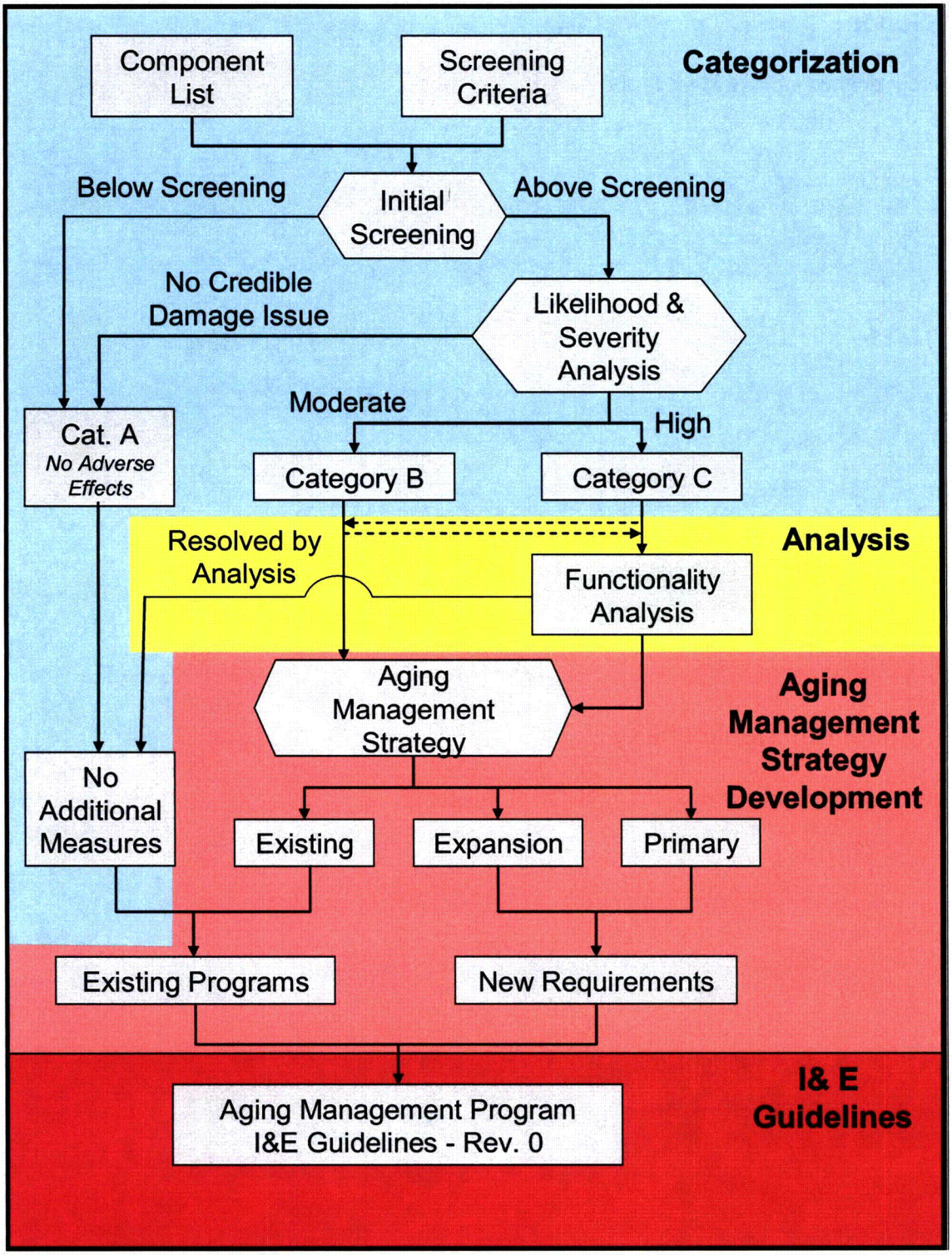

Figure 2-2
Links between categorization, functionality analysis, aging management strategy development and the I&E guidelines

2.3 Scope

Content deleted - EPRI/MRP Proprietary Information.

2.4 Guidelines Applicability

Content deleted - EPRI/MRP Proprietary Information.

Content deleted - EPRI/MRP Proprietary Information.

3
COMPONENT CATEGORIZATION AND AGING MANAGEMENT STRATEGY DEVELOPMENT

Content deleted - EPRI/MRP Proprietary Information.

3.1 Design Characteristics Summary

The functions of PWR internals are to:

1. provide support, guidance, and protection for the reactor core;
2. provide a passageway for the distribution of the reactor coolant flow to the reactor core;
3. provide a passageway for support, guidance, and protection for control elements and in-vessel/core instrumentation; and
4. provide gamma and neutron shielding for the reactor vessel.

3.1.1 B&W Internals Design Characteristics

The seven B&W-designed operating units share common design characteristics with minor variations. The B&W-designed PWR internals consist of two major structural assemblies that are located within, but not welded to the reactor vessel. These two major assemblies are called the plenum assembly and the core support assembly (CSA). The latter includes three principal sub-assemblies – the core support shield (CSS) assembly, the core barrel assembly, and the lower internals assembly. The general arrangement of the B&W-designed PWR internals is shown in Figure 3-1. A brief summary of the design characteristics for these internals is provided in the following sub-section. For a more complete discussion, see Reference 8.

Plenum Assembly

The plenum assembly is a cylindrical structure with perforated grid plates on top and bottom, and is comprised of: (1) the plenum cover assembly; (2) the plenum cylinder assembly; (3) the upper grid assembly; and (4) the control rod guide tube assemblies. The plenum assembly fits inside the core support shield, positions the top of the fuel assemblies, supports the control rod guide tube assemblies, and provides the core hold-down required for hydraulic lift forces. The plenum assembly also provides continuous guidance and protection for the control rods, and directs flow out of the core to reactor vessel outlet nozzles. The plenum assembly is removed at the beginning of every refueling outage, in order to permit access to the fuel assemblies.

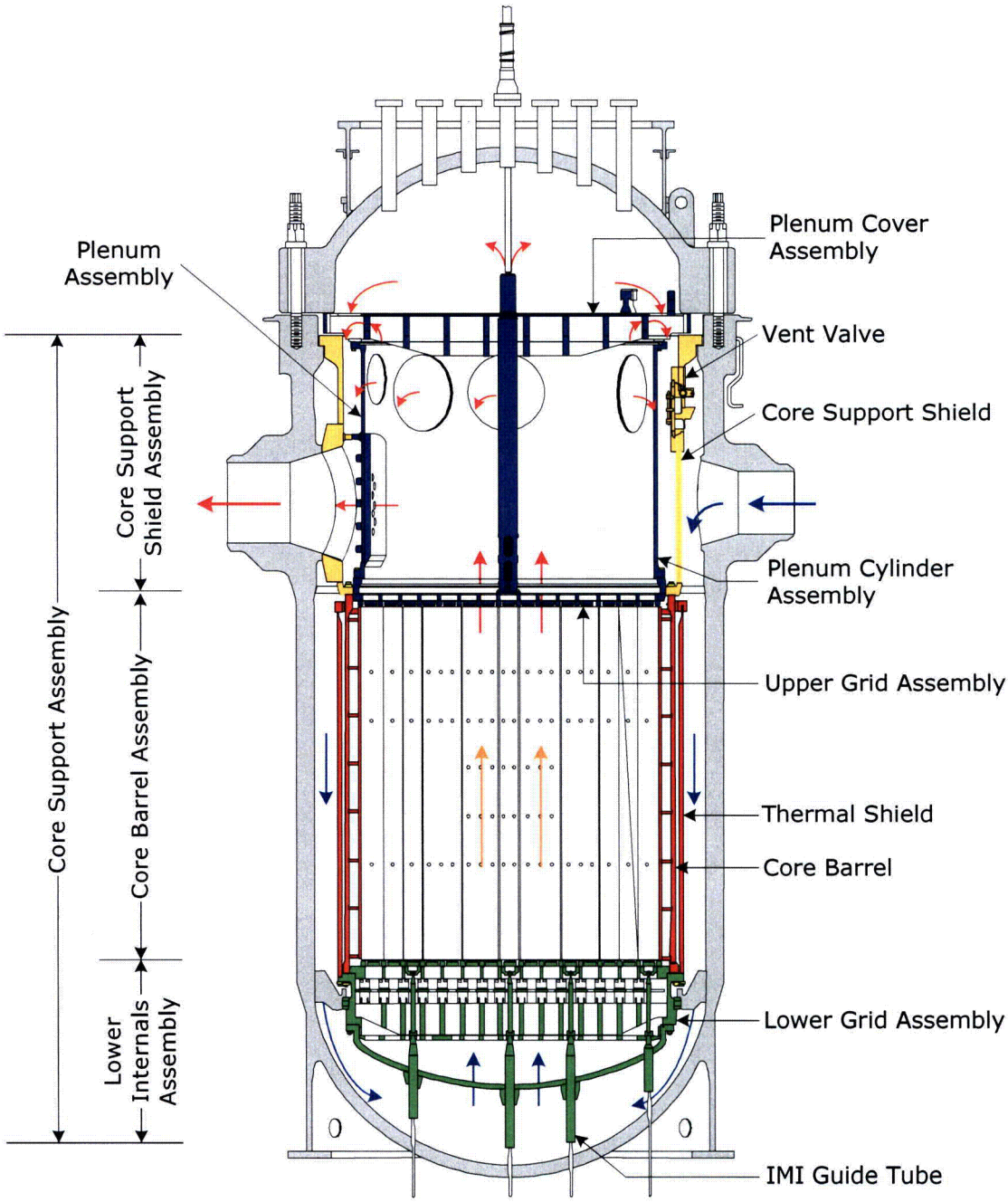

Figure 3-1
Overview of typical B&W internals

The plenum cover assembly is bolted to the top of the plenum cylinder, and consists of a weldment, a bottom flange, a support ring and flange, a cover plate, and lifting lugs. The plenum cover assembly provides support for the top of the control rod guide tube assemblies. The lifting lugs are used to lift the plenum assembly out of the reactor vessel.

The plenum cylinder assembly is bolted to the bottom of the plenum cover assembly and consists of a cylinder, top and bottom flanges, reinforcing plates, and round bars. Its function is to direct the flow of reactor coolant from the core region to the reactor vessel outlet nozzles.

The upper grid assembly sits inside the lower flange of the core support shield and is bolted to the plenum cylinder bottom flange. It is comprised of an upper grid ring forging, an upper grid rib section, and fuel assembly support pads. Its function is to support and provide a seating surface for the tops of the fuel assemblies located within the core barrel below, and to restrain and align the bottoms of the control rod guide tubes.

The control rod guide tube assemblies each consist of a pipe (the guide housing), a flange, spacer castings, guide tubes, and rod guide sectors. The assemblies are welded to the plenum cover plate and bolted to the upper grid assembly. Their function is to provide control rod assembly guidance, protect the control rod assembly from the effects of potential coolant cross-flow, and structurally connect the upper grid assembly to the plenum cover.

Core Support Assembly

The core support assembly is fabricated by bolting together the core support shield assembly, the core barrel assembly, and the lower internals assembly to form a tall cylinder. The core support assembly remains in place in the reactor vessel during refueling, and is removed only to perform scheduled inspections of the reactor vessel interior surfaces or of the core support assembly itself.

The top portion of the core support assembly is the core support shield assembly, a cylinder with an upper flange that rests on a circumferential support ledge in the reactor vessel closure flange, thereby supporting the entire core support assembly. It sits directly on top of the core barrel, and consists of a cylinder, top and bottom flanges, outlet nozzles, vent valve nozzles, vent valves, round bars, flow deflectors, and lifting lugs. Its function is to provide a boundary between the incoming cold reactor coolant on the outside of the cylinder and the heated reactor coolant flowing on the inside of the cylinder.

The core barrel assembly is a second flanged cylinder, with its top flange bolted to the bottom flange of the core support shield assembly and its bottom flange bolted to the top flange of the lower internals assembly. The core barrel assembly consists of a cylinder, top and bottom flanges, baffle and former plates, and a thermal shield cylinder. Its functions are to direct the flow of coolant and to support the lower internals assembly. In addition, the thermal shield reduces the amount of radiation that reaches the reactor vessel. The incoming reactor coolant is directed downward along the outside of the core barrel cylinder and upward through the fuel assemblies contained inside the core barrel. A small amount of coolant flows upward through the space between the core barrel cylinder and the baffle plates. A small portion of the coolant also runs down the annulus between the thermal shield and the core barrel cylinder, through holes drilled in the core barrel cylinder bottom flange, and then upward through the core.

The lower internals assembly consists of a lower grid assembly, a flow distributor assembly, and in-core monitoring instrumentation guide tube assemblies. The lower internals assembly is bolted to the bottom flange of the core barrel cylinder, and its function is to direct coolant flow upward through the fuel assemblies. The lower grid assembly consists of three grid structures or flow plates: (1) the lower grid rib section, (2) the flow distributor plate, and (3) the lower grid forging. Each of these flow plates has holes or flow ports to direct coolant flow upward toward the fuel assemblies.

3.1.2 CE Internals Design Characteristics

In general, the 14 operating CE-designed PWRs in the U.S. are divided into three groups: (1) those with a bolted core shroud and top-mounted in-core instrumentation (ICI); (2) those with a welded core shroud and top-mounted ICI; and (3) those with a welded core shroud and bottom-mounted ICI.

The CE-designed PWR internals consist of three major structural assemblies, plus three other sets of major components. The three major assemblies are the: (1) upper internals assembly, (2) core support barrel assembly, and (3) lower internals assembly. In addition, the three other sets of major components are the control element assembly shroud assemblies, core shroud assembly, and in-core instrumentation support system. The general arrangement of the CE-designed PWR internals is shown in Figure 3-2. A brief summary of the design characteristics for these internals is provided in the following sub-section. For a more complete discussion, see Reference 10.

Upper Internals Assembly

The upper internals assembly is located above the reactor core, within the core support barrel assembly, and is removed during refueling as a single component in order to provide access to the fuel assemblies. The upper internals assembly consists of the upper guide structure support plate, the fuel assembly alignment plate, the control element assembly shroud assemblies, the upper guide structure grid assembly, the upper guide structure cylinder, the in-core instrumentation support system and the hold-down ring (or expansion compensating ring). The functions of the upper internals assembly are to provide alignment and support to the fuel assemblies, to maintain control element assembly shroud spacing, to prevent movement of the fuel assemblies in the case of a severe accident condition, and to protect the control rods from cross-flow effects in the upper plenum. The flange on the upper end of the upper internals assembly rests on the core support barrel.

Core Support Barrel

The core support barrel assembly consists of the core support barrel, the core support barrel upper flange, core support barrel alignment keys, and the core support barrel snubbers. In one CE plant, a thermal shield is part of the core support barrel assembly.

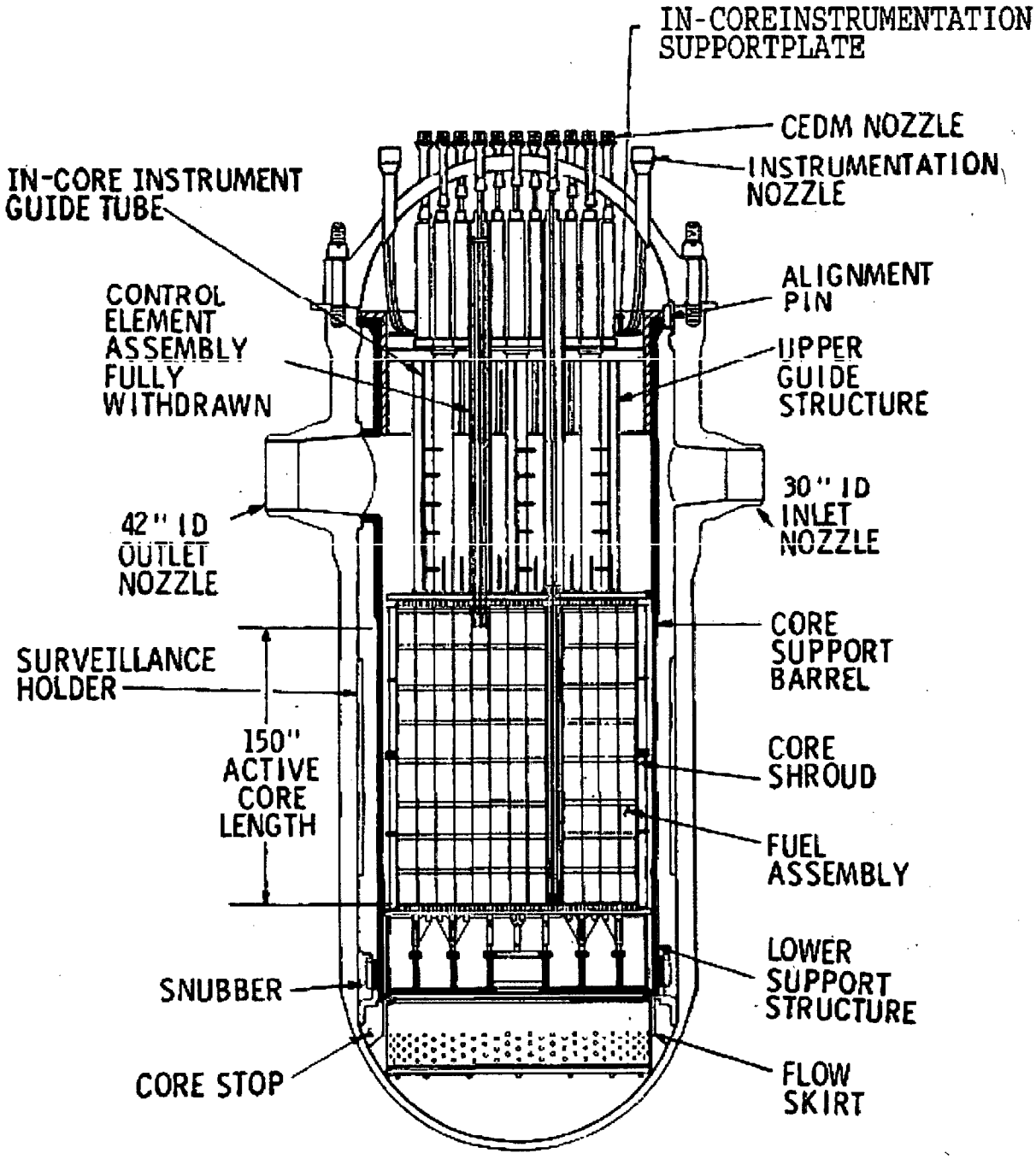

Figure 3-2
Overview of typical CE internals

The core support barrel is a cylinder which contains the core and other internals. Its function is to resist static loads from the fuel assemblies and other internals, and dynamic loads from normal operating hydraulic flow, seismic events, and loss-of-coolant-accident (LOCA) events. The core support barrel also supports the lower internals assembly and its core support plate, upon which the fuel assemblies rest.

The core support barrel upper flange is a thick ring that supports and suspends the core support barrel from a ledge on the reactor vessel.

Lower Internals Assembly

The lower internals assembly consists of the core support plate, the fuel alignment pins, the core support columns, the in-core instrumentation (ICI) support system, and the lower support structure beam assemblies. The core support plate functions are to position and support the reactor core, and to provide control of reactor coolant flow into each fuel assembly. The core support plate transmits the weight of the core to the core support barrel by means of the vertical core support columns, an annular skirt, and the lower support structure beams. The fuel alignment pins protrude from the core support plate and provide guidance and limit lateral movement of the individual fuel assemblies. CE plants with a welded core shroud and bottom-mounted ICI have no core support plate, in which case the fuel alignment pins are attached directly to the core support deep beams.

Core Shroud Assembly

The core shroud assembly is located within the core support barrel and directly below the upper internals assembly. The core shroud assembly is attached to the core support barrel by threaded structural fasteners for those internals with a bolted core shroud and top-mounted ICI. The core shroud assembly is attached to the core support plate – an element of the lower internals assembly – by tie rods or welds for the internals with a welded core shroud and top-mounted ICI (Figure 3-3). The core shroud assembly is attached to the lower internals assembly cylinder by welding for those internals with a welded core shroud and bottom-mounted ICI (Figure 3-4). The core shroud assembly functions are to provide a boundary between reactor coolant flow on the outside of the core support barrel and the reactor coolant flow through the fuel assemblies, to limit the amount of coolant bypass flow, and to reduce the lateral motion of the fuel assemblies.

Control Element Assembly Shroud Assemblies

The control element assembly shroud assemblies consist of control element assembly shrouds, the control element assembly shroud bolts, and the control element assembly shroud extension shaft guides. The shroud tubes protect the control rods from cross-flow effects in the upper plenum. The bottom part of the shrouds is bolted at their lower end to the fuel assembly alignment plate. The extension shaft guides also protect the control rods from cross-flow effects in the upper plenum, and provide lateral support and alignment of the control element assembly extension shafts during refueling operations. The control element drive mechanisms are positioned on the reactor vessel closure head and are coupled to the control element assemblies by the control element assembly extension shafts. Control element assembly shroud assemblies are attached to the upper guide structure support plate by tie rods.

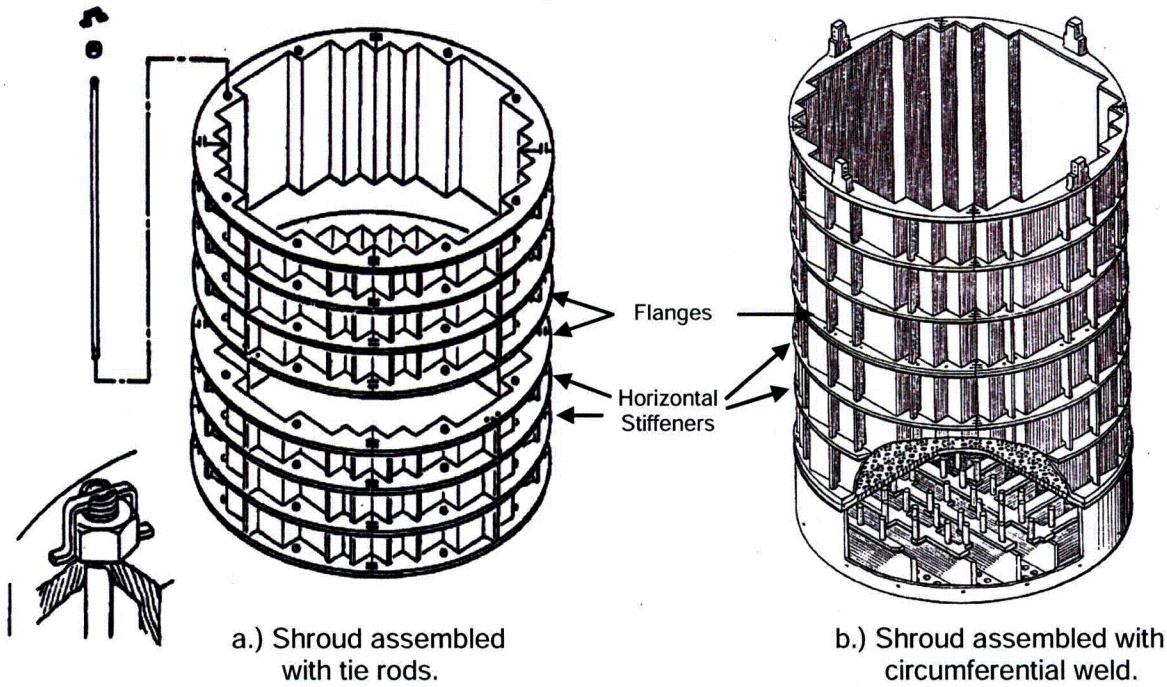

Figure 3-3
CE welded core shroud designs assembled in two vertical sections (with top-mounted ICI)

In-Core Instrumentation Support System

The in-core instrumentation support system consists of in-core instrumentation guide tubes and components which provide support to the in-core instrumentation.

For plants with top-entry in-core instrumentation assemblies, the in-core instrumentation is inserted through the reactor vessel head through a nozzle into a guide tube. The guide tubes interface with the thimble support plate, which is perforated to fit over the control element assembly extension shaft guides, with a connection to the upper guide structure support plate. ICI thimble tube assemblies extend downward from a flanged connection at the thimble support plate (in the original design) through the fuel alignment plate and into the reactor core. The upper portion of the ICI thimble tube exists between the thimble support plate and fuel alignment plate, while the lower ICI thimble tube is the zirconium alloy portion that extends into the fuel assemblies.

For plants with bottom-entry in-core instrumentation, the guide tubes are connected to and supported by the lower internals assembly, from which the in-core instrumentation enters the core.

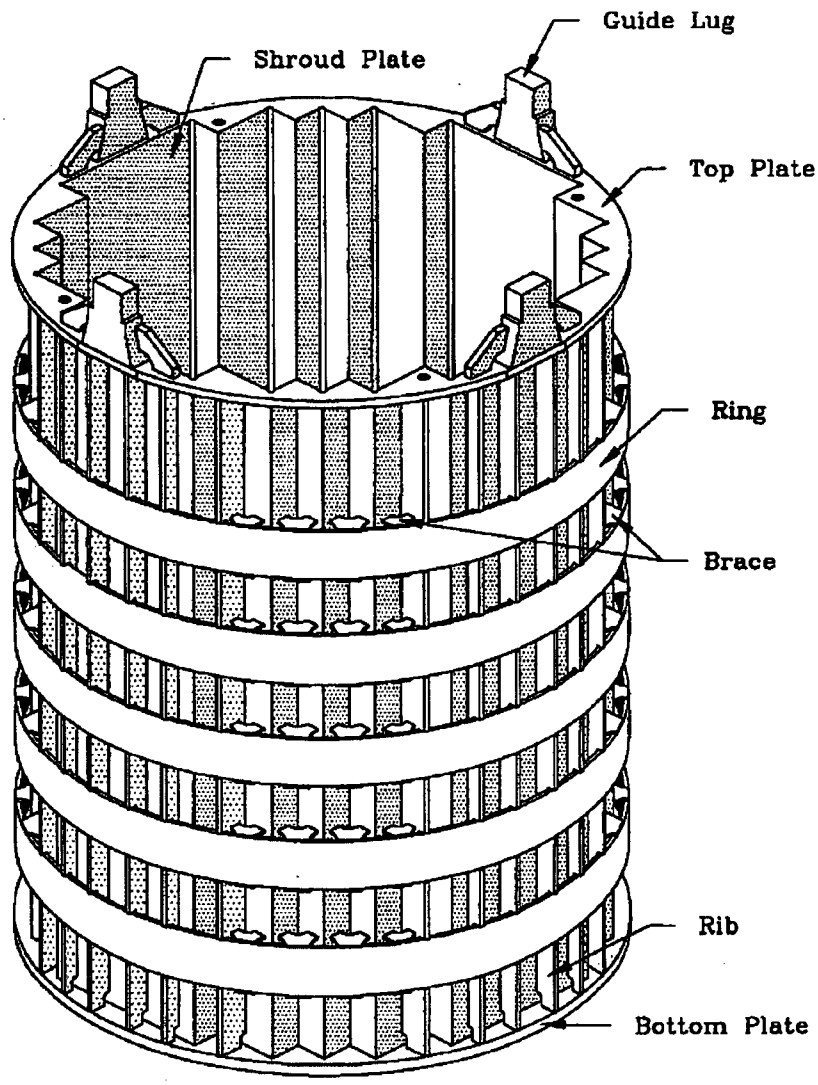

Figure 3-4
CE welded core shroud with full height panels (with bottom-mounted ICI)

3.1.3 Westinghouse Internals Design Characteristics

A schematic view of a typical set of Westinghouse-designed PWR internals is shown in Figure 3-5. However, because of the significant variation in design characteristics, the 48 operating Westinghouse PWRs in the U.S. are sub-divided into various groups, starting with the number of reactor coolant system (RCS) loops – two-loop, three-loop, and four-loop configurations. Other significant variations include the original thermal output, the baffle-barrel region flow design (downflow, upflow, and converted upflow), and upper support plate configuration. A complete set of these groups is provided in Section 4 of Reference 10.

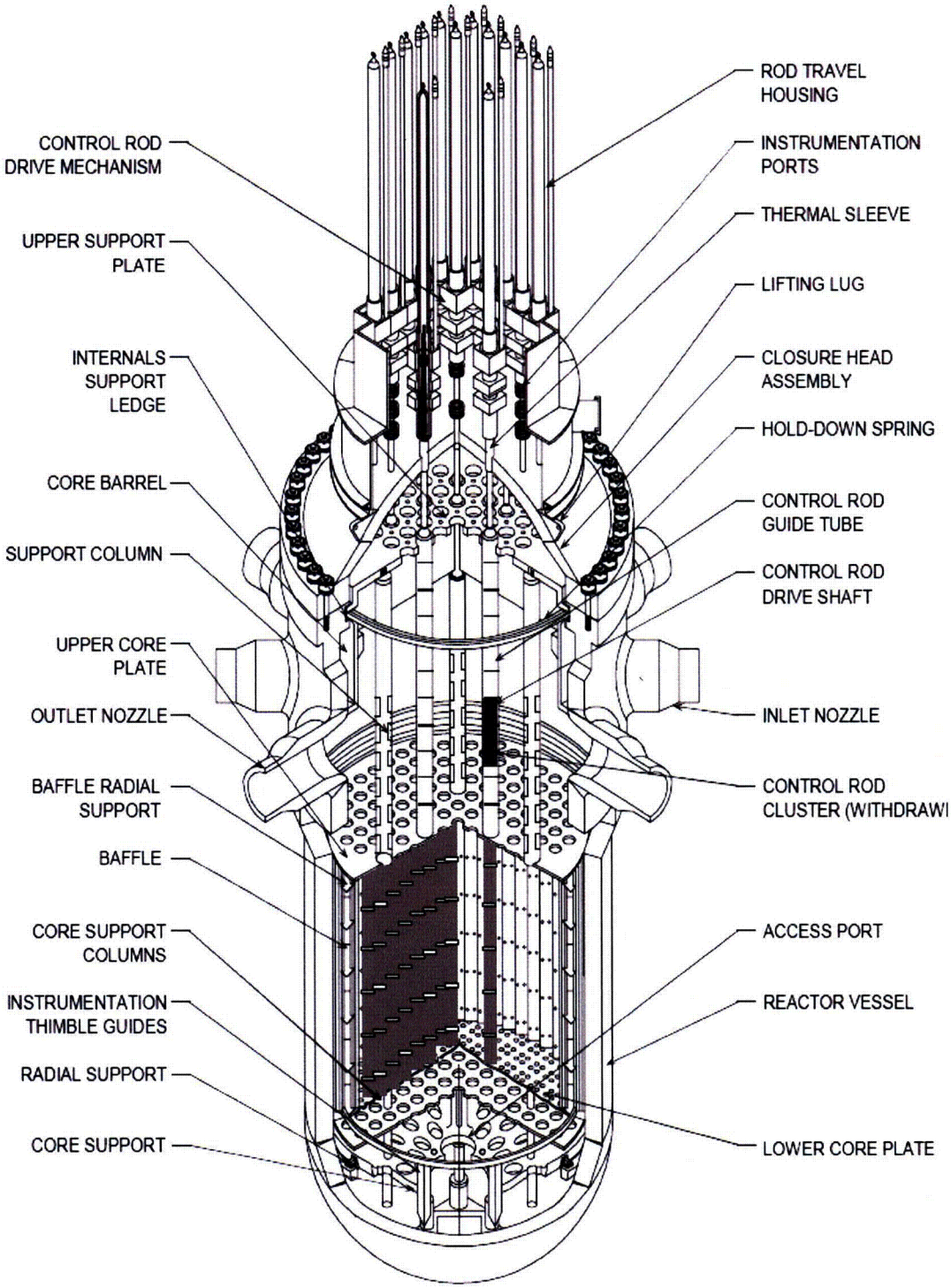

Figure 3-5
Overview of typical Westinghouse internals

All Westinghouse internals consist of two basic assemblies: an upper internals assembly that is removed during each refueling operation to obtain access to the reactor core and a lower internals assembly that can be removed following a complete core off-load.

The lower internals assembly is supported in the vessel by clamping to a ledge below the vessel-head mating surface and is closely guided at the bottom by radial support/clevis assemblies. The upper internals assembly is clamped at this same ledge by the reactor vessel head. The bottom of the upper internals assembly is closely guided by the core barrel alignment pins of the lower internals assembly.

Upper Internals Assembly

The major sub-assemblies that comprise the upper internals assembly are the: (1) upper core plate (UCP) and fuel alignment pins; (2) upper support column assemblies; (3) control rod guide tube assemblies and flow downcomers; (4) upper plenum; and (5) upper support plate assembly.

During reactor operation, the upper internals assembly is preloaded against the fuel assembly springs and the internals holddown springs by the reactor vessel head pressing down on the outside edge of the upper support plate (USP). The USP acts as the divider between the upper plenum and the reactor vessel head and as a relatively stiff base for the rest of the upper internals. The upper support columns and the guide tubes are attached to the USP. The UCP, in turn, is attached to the upper support columns. The USP assemblies are designated as one of three different designs: (1) a deep beam design, (2) a top hat design, or (3) an inverted top hat design.

The UCP is perforated to permit coolant to pass from the core below into the upper plenum defined by the USP and the UCP. The coolant then exits through the outlet nozzles in the core barrel. The UCP positions and laterally supports the core by fuel alignment pins extending below the plate. The UCP contacts and preloads the fuel assembly springs and thus maintains contact of the fuel assemblies with the lower core plate (LCP) during reactor operation.

The upper support columns vertically position the UCP and are designed to take the uplifting hydraulic flow loads and fuel spring loads on the UCP. The guide tubes are bolted to the USP and pinned at the UCP so they can be easily removed if replacement is desired. The guide tubes are designed to guide the control rods in and out of the fuel assemblies to control power generation. The guide tubes are also slotted in their lower sections to allow coolant exiting from the core to flow into the upper plenum.

The upper instrumentation columns are bolted to the USP. These columns support the thermocouple guide tubes that lead the thermocouples from the reactor head into the upper plenum to just above the UCP.

The UCP alignment pins locate the UCP laterally with respect to the lower internals assembly. The pins must laterally support the UCP so that the plate is free to expand radially and move axially during differential thermal expansions between the upper internals and the core barrel. The UCP alignment pins are the interfacing components between the UCP and the core barrel.

The UCP alignment pins are shrunk-fit and welded into the core barrel and the core barrel bearing pad. The gap sizes between the alignment pins and the matching inserts are customized.

The USP, the upper support columns, and the UCP are typically considered core support structures.

Lower Internals Assembly

The reactor core is positioned and supported by the lower internals and upper internals assemblies. The individual fuel assemblies are positioned by fuel alignment pins in the LCP and in the UCP. These pins control the orientation of the core with respect to the lower internals and upper internals assemblies. The lower internals are aligned with the upper internals by the UCP alignment pins and secondarily by the head/vessel alignment pins. The lower internals are orientated to the vessel by the lower radial keys and by the head/vessel alignment pins. Thus, the core is aligned with the vessel by a number of interfacing components.

The lower internals assembly is supported in the vessel by clamping to a ledge below the vessel-head mating surface and closely guided at the bottom by radial support/clevis assemblies. The upper internals assembly is clamped at this same ledge by the reactor vessel head. The bottom of the upper internals assembly is closely guided by the core barrel alignment pins of the lower internals assembly.

The fuel assemblies are supported inside the lower internals assembly on top of the LCP. The LCP is elevated above the lower support forging by support columns and bolted to a ring support attached to the inside diameter of the core barrel. The support columns transmit vertical fuel assembly loads from the LCP to the much thicker lower support forging. The lower support forging is welded to and supported by the core barrel, which transmits vertical loads to the vessel through the core barrel flange.

The functions of the LCP are to position and support the core and provide a metered control of reactor coolant flow into each fuel assembly. The LCP is located near the bottom of the lower support assembly, inside the core barrel, and above the lower support forging.

The function of the lower support forging or casting is to provide support for the core. The lower support forging is attached with a full-penetration weld to the lower end of the core barrel. In this position it can provide uninterrupted support to the core. The core sits directly on the LCP, which is supported by the lower support columns that are attached to and extend above the lower support forging. Some four-loop plants employ a cast lower support instead of a forging. The functions, loads, and supporting hardware are the same except for dimensions.

The primary function of the core barrel is to support the core. A large number of components are attached to either the core barrel or the core barrel flange, including the baffle/former assembly, the outlet nozzles, the neutron panel assemblies or thermal shield, the alignment pins that engage the UCP and the LCP, the lower support forging, and the LCP. The radial keys restrain large transverse motions of the core barrel but at the same time allow unrestricted radial and axial thermal expansions.

The baffle and former assembly is made up of vertical plates called baffles and horizontal support plates called formers. The baffle plates are bolted to the formers by the baffle/former bolts, and the formers are attached to the core barrel inside diameter by the barrel/former bolts. The baffle/former assembly forms the interface between the core and the core barrel. The baffles provide a barrier between the core and the former region so that a high concentration of flow in the core region can be maintained. A secondary benefit, although not a requirement of the baffles, is to reduce the neutron flux on the vessel.

Baffle plates are secured to each other at selected corners by edge bolts. In addition, in some installations, corner brackets are installed behind and bolted to the baffle plates.

The function of the core barrel outlet nozzles is to direct the reactor coolant, after it leaves the core, radially outward through the reactor vessel outlet nozzles. The core barrel outlet nozzles are located in the upper portion of the core barrel directly below the flange and are attached to the core barrel, each in line with a vessel outlet nozzle.

Additional neutron shielding of the reactor vessel is provided in the active core region by neutron panels or thermal shields that are attached to the outside of the core barrel. Specimen guides that contain specimens for determining the irradiation effects of the vessel during the life of the plant are attached to the neutron panels/thermal shields.

The flux thimble is a long, slender stainless steel tube that passes from an external seal table, through the bottom mounted nozzle penetration, through the lower internals assembly, and finally extends to the top of the fuel assembly. The flux thimble provides a path for the neutron flux detector into the core and is subjected to reactor coolant pressure and temperature on the outside surface and to atmospheric conditions on the inside. The flux thimble path from the seal table to the bottom mounted nozzles is defined by flux thimble guide tubes, which are part of the primary pressure boundary and not considered to be part of the internals. The bottom-mounted instrumentation (BMI) columns provide a path for the flux thimbles from the bottom of the vessel into the core. The BMI columns align the flux thimble path with instrumentation thimbles in the fuel assembly.

The LCP and the fuel alignment pins, the lower support forging or casting, the lower support columns, the core barrel, the core barrel flange, the radial support keys, the baffle plates, and the former plates are typically classified as core support structures.

3.2 Initial Screening Summary

This sub-section contains a summary of the initial screening of PWR internals – screening those internals on the basis of susceptibility to eight different age-related degradation mechanisms – stress corrosion cracking (SCC), irradiation-assisted stress corrosion cracking (IASCC), wear, fatigue, thermal aging embrittlement, irradiation embrittlement, void swelling, and the combination of thermal and irradiation-enhanced stress relaxation or irradiation-enhanced creep. Development and justification of the screening criteria required knowledge of the specific aging mechanisms and their effects, some engineering judgment, and the use of empirical relations where data were lacking. The full explanation of the screening criteria for the eight age-related degradation mechanisms identified for PWR internals is provided in Reference 7.

For this initial screening, the group of PWR internals that were deemed not to be susceptible to any of the eight age-related degradation mechanisms (i.e., below the screening criteria) were placed into the A Category. The Category A components are listed in previous reports for the B&W PWR designs [8] and the CE and Westinghouse PWR designs [10]. The further categorization of the components is discussed in Section 3.3.

The age-related degradation mechanisms used for the initial screening are defined in the following sub-sections. More detailed discussions of these aging mechanisms are provided in Reference 7.

3.2.1 Stress Corrosion Cracking

Stress Corrosion Cracking (SCC) refers to local, non-ductile cracking of a material due to a combination of tensile stress, environment, and metallurgical properties. The actual mechanism that causes SCC involves a complex interaction of environmental and metallurgical factors. The aging effect is cracking.

3.2.2 Irradiation-Assisted Stress Corrosion Cracking

Irradiation-assisted stress corrosion cracking (IASCC) is a unique form of SCC that occurs only in highly-irradiated components. The aging effect is cracking.

3.2.3 Wear

Wear is caused by the relative motion between adjacent surfaces, with the extent determined by the relative properties of the adjacent materials and their surface condition. The aging effect is loss of material.

3.2.4 Fatigue

Fatigue is defined as the structural deterioration that can occur as the result of repeated stress/strain cycles caused by fluctuating loads and temperatures. After repeated cyclic loading of sufficient magnitude, microstructural damage can accumulate, leading to macroscopic crack initiation at the most highly affected locations. Subsequent mechanical or thermal cyclic loading can lead to growth of the initiated crack. Corrosion fatigue is included in the degradation description.

Low-cycle fatigue is defined as cyclic loads that cause significant plastic strain in the highly stressed regions, where the number of applied cycles is increased to the point where the crack eventually initiates. When the cyclic loads are such that significant plastic deformation does not occur in the highly stressed regions, but the loads are of such increased frequency that a fatigue crack eventually initiates, the damage accumulated is said to have been caused by high-cycle fatigue. The aging effects of low-cycle fatigue and high-cycle fatigue are additive.

Fatigue crack initiation and growth resistance is governed by a number of material, structural and environmental factors, such as stress range, loading frequency, surface condition and presence of deleterious chemical species. Cracks typically initiate at local geometric stress concentrations, such as notches, surface defects, and structural discontinuities. The aging effect is cracking.

3.2.5 Thermal Aging Embrittlement

Thermal aging embrittlement is the exposure of delta ferrite within cast austenitic stainless steel (CASS) and precipitation-hardenable (PH) stainless steel to high inservice temperatures, which can result in an increase in tensile strength, a decrease in ductility, and a loss of fracture toughness. Some degree of thermal aging embrittlement can also occur at normal operating temperatures for CASS and PH stainless steel internals. CASS components have a duplex microstructure and are particularly susceptible to this mechanism. While the initial aging effect is loss of ductility and toughness, unstable crack extension is the eventual aging effect if a crack is present and the local applied stress intensity exceeds the reduced fracture toughness.

3.2.6 Irradiation Embrittlement

Irradiation embrittlement is also referred to as neutron embrittlement. When exposed to high-energy neutrons, the mechanical properties of stainless steel and nickel-base alloys can be changed. Such changes in mechanical properties include increasing yield strength, increasing ultimate strength, decreasing ductility, and a loss of fracture toughness. The irradiation embrittlement aging mechanism is a function of both temperature and neutron fluence. While the initial aging effect is loss of ductility and toughness, unstable crack extension is the eventual aging effect if a crack is present and the local applied stress intensity exceeds the reduced fracture toughness.

3.2.7 Void Swelling and Irradiation Growth

Void swelling is defined as a gradual increase in the volume of a component caused by formation of microscopic cavities in the material. These cavities result from the nucleation and growth of clusters of irradiation produced vacancies. Helium produced by nuclear transmutations can have a significant impact on the nucleation and growth of cavities in the material. Void swelling may produce dimensional changes that exceed the tolerances on a component. Strain gradients produced by differential swelling in the system may produce significant stresses. Severe swelling (>5% by volume) has been correlated with extremely low fracture toughness values. Also included in this description is irradiation growth of anisotropic materials, which is known to cause significant dimensional changes in in-core instrumentation tubes fabricated from zirconium alloys. While the initial aging effect is dimensional change and distortion, severe void swelling may result in cracking under stress.

3.2.8 Thermal and Irradiation-Enhanced Stress Relaxation or Irradiation-Enhanced Creep

The loss of preload aging effect can be caused by the aging mechanisms of stress relaxation or creep. Thermal stress relaxation (or, primary creep) is defined as the unloading of preloaded components due to long-term exposure to elevated temperatures, such as seen in PWR internals. Stress relaxation occurs under conditions of constant strain where part of the elastic strain is replaced with plastic strain. Available data show that thermal stress relaxation appears to reach saturation in a short time (< 100 hours) at PWR internals temperatures.

Creep (or more precisely, secondary creep) is a slow, time and temperature dependent, plastic deformation of materials that can occur when subjected to stress levels below the yield strength (elastic limit). Creep occurs at elevated temperatures where continuous deformation takes place under constant strain. Secondary creep in austenitic stainless steels is associated with temperatures higher than those relevant to PWR internals even after taking into account gamma heating. However, irradiation-enhanced creep (or more simply, irradiation creep) or irradiation-enhanced stress relaxation (ISR) is an athermal process that depends on the neutron fluence and stress; and, it can also be affected by void swelling should it occur. The aging effect is a loss of mechanical closure integrity (or, preload) that can lead to unanticipated loading which, in turn, may eventually cause subsequent degradation by fatigue or wear and result in cracking.

3.3 Component Categorization and Aging Management Strategy Development Results Summary

3.3.1 Method and Definitions

Content deleted - EPRI/MRP Proprietary Information.

Content deleted - EPRI/MRP Proprietary Information.

3.3.2 Results of Categorization and Aging Management Strategy Development

Content deleted - EPRI/MRP Proprietary Information.

Table 3-1
Final disposition of category B and C B&W internals

Content deleted - EPRI/MRP Proprietary Information.

Table 3-1
Final disposition of category B and C B&W internals (continued)

Content deleted - EPRI/MRP Proprietary Information.

Table 3-1
Final disposition of category B and C B&W internals (continued)

Content deleted - EPRI/MRP Proprietary Information.

Table 3-1
Final disposition of category B and C B&W internals (continued)

Content deleted - EPRI/MRP Proprietary Information.

Table 3-2
Final disposition of category B and C CE internals

Content deleted - EPRI/MRP Proprietary Information.

Table 3-2
Final disposition of category B and C CE internals (continued)

Content deleted - EPRI/MRP Proprietary Information.

Table 3-3
Final disposition of category B and C Westinghouse internals

Content deleted - EPRI/MRP Proprietary Information.

Table 3-3
Final disposition of category B and C Westinghouse internals (continued)

Content deleted - EPRI/MRP Proprietary Information.

4
AGING MANAGEMENT REQUIREMENTS

Content deleted - EPRI/MRP Proprietary Information.

Content deleted - EPRI/MRP Proprietary Information.

Content deleted - EPRI/MRP Proprietary Information.

Content deleted - EPRI/MRP Proprietary Information.

4.1 Aging Management Approach

Content deleted - EPRI/MRP Proprietary Information.

4.1.1 PWR Internals Categorization and Aging Management Strategy Development

Content deleted - EPRI/MRP Proprietary Information.

4.1.2 Selection of Established Aging Management Methodologies

Content deleted - EPRI/MRP Proprietary Information.

Content deleted - EPRI/MRP Proprietary Information.

4.1.3 Aging Management Methodology Qualification

Content deleted - EPRI/MRP Proprietary Information.

4.1.4 Implementation of Aging Management Requirements

Content deleted - EPRI/MRP Proprietary Information.

4.2 Aging Management Methodologies

Content deleted - EPRI/MRP Proprietary Information.

4.2.1 Visual (VT-3) Examination

Content deleted - EPRI/MRP Proprietary Information.

4.2.2 Visual (VT-1 and EVT-1) Examinations

Content deleted - EPRI/MRP Proprietary Information.

4.2.3 Surface Examination

Content deleted - EPRI/MRP Proprietary Information.

4.2.4 Volumetric Examination

Content deleted - EPRI/MRP Proprietary Information.

4.2.5 Physical Measurements

Content deleted - EPRI/MRP Proprietary Information.

4.3 Primary and Expansion Component Requirements

Content deleted - EPRI/MRP Proprietary Information.

Content deleted - EPRI/MRP Proprietary Information.

4.3.1 B&W Components

Content deleted - EPRI/MRP Proprietary Information.

Content deleted - EPRI/MRP Proprietary Information.

Content deleted - EPRI/MRP Proprietary Information.

Content deleted - EPRI/MRP Proprietary Information.

Content deleted - EPRI/MRP Proprietary Information.

Content deleted - EPRI/MRP Proprietary Information.

Content deleted - EPRI/MRP Proprietary Information..

Content deleted - EPRI/MRP Proprietary Information.

Content deleted - EPRI/MRP Proprietary Information.

Content deleted - EPRI/MRP Proprietary Information.

4.3.2 CE Components

Content deleted - EPRI/MRP Proprietary Information.

Content deleted - EPRI/MRP Proprietary Information.

Content deleted - EPRI/MRP Proprietary Information.

Content deleted - EPRI/MRP Proprietary Information.

4.3.3 Westinghouse Components

Content deleted - EPRI/MRP Proprietary Information.

Content deleted - EPRI/MRP Proprietary Information.

Content deleted - EPRI/MRP Proprietary Information..

Table 4-1
B&W plants Primary components

Content deleted - EPRI/MRP Proprietary Information.

Table 4-1
B&W plants Primary components (continued)

Content deleted - EPRI/MRP Proprietary Information.

Table 4-1
B&W plants Primary components (continued)

Content deleted - EPRI/MRP Proprietary Information.

Table 4-1
B&W plants Primary components (continued)

Content deleted - EPRI/MRP Proprietary Information.

Table 4-2
CE plants Primary components

Content deleted - EPRI/MRP Proprietary Information.

Table 4-2
CE plants Primary components (continued)

Content deleted - EPRI/MRP Proprietary Information.

Table 4-2
CE plants Primary components (continued)

Content deleted - EPRI/MRP Proprietary Information.

Table 4-2
CE plants Primary components (continued)

Content deleted - EPRI/MRP Proprietary Information.

Table 4-3
Westinghouse plants Primary components

Content deleted - EPRI/MRP Proprietary Information.

Table 4-3
Westinghouse plants Primary components (continued)

Content deleted - EPRI/MRP Proprietary Information.

Table 4-3
Westinghouse plants Primary components (continued)

Content deleted - EPRI/MRP Proprietary Information.

Table 4-4
B&W plants Expansion components

Table 4-4
B&W plants Expansion components (continued)

Content deleted - EPRI/MRP Proprietary Information.

Table 4-4
B&W plants Expansion components (continued)

Content deleted - EPRI/MRP Proprietary Information.

Table 4-5
CE plants Expansion components

Content deleted - EPRI/MRP Proprietary Information.

Table 4-5
CE plants Expansion components (continued)

Content deleted - EPRI/MRP Proprietary Information.

Table 4-5
CE plants Expansion components (continued)

Content deleted - EPRI/MRP Proprietary Information.

Table 4-6
Westinghouse plants Expansion components

Content deleted - EPRI/MRP Proprietary Information.

Table 4-6
Westinghouse plants Expansion components (continued)

Content deleted - EPRI/MRP Proprietary Information.

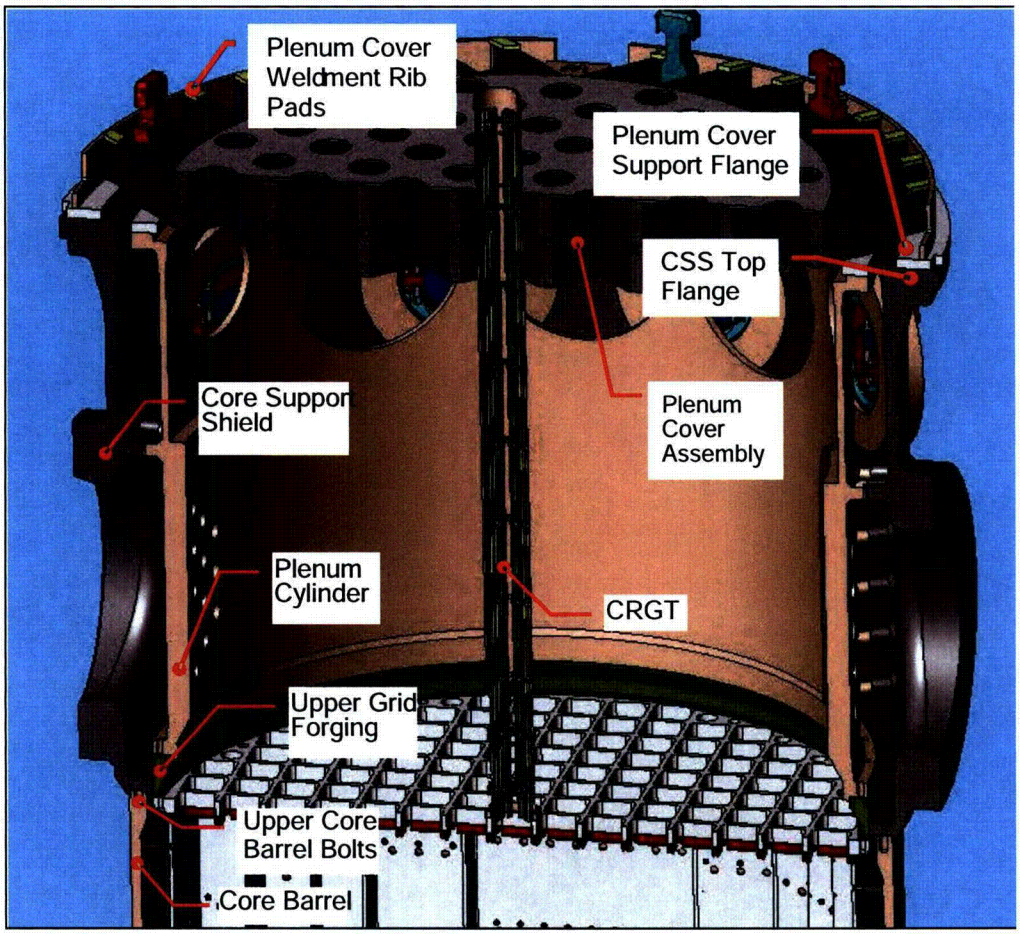

Figure 4-1
Typical upper internals arrangement for B&W-designed PWRs

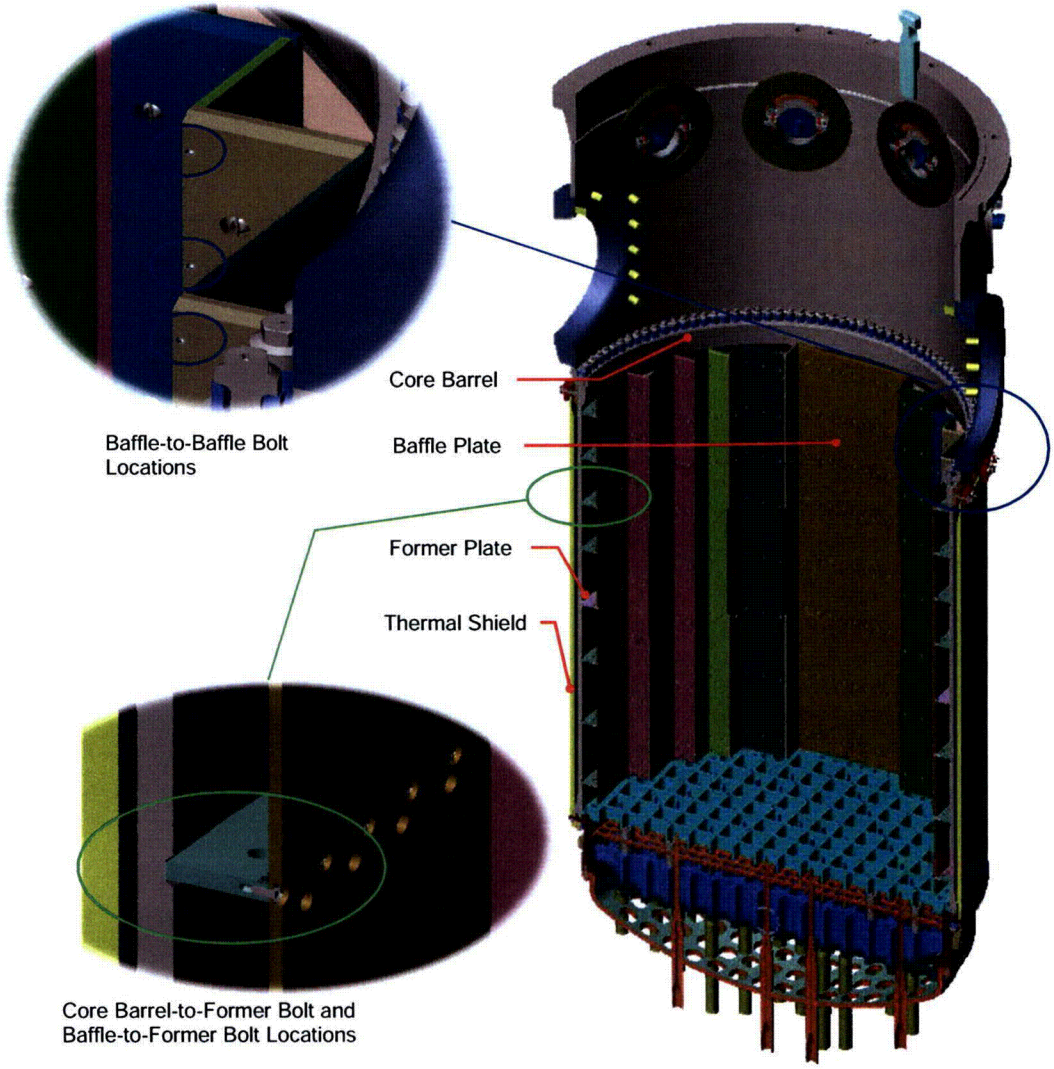

Figure 4-2
Typical internals core barrel assembly for B&W-designed PWRs

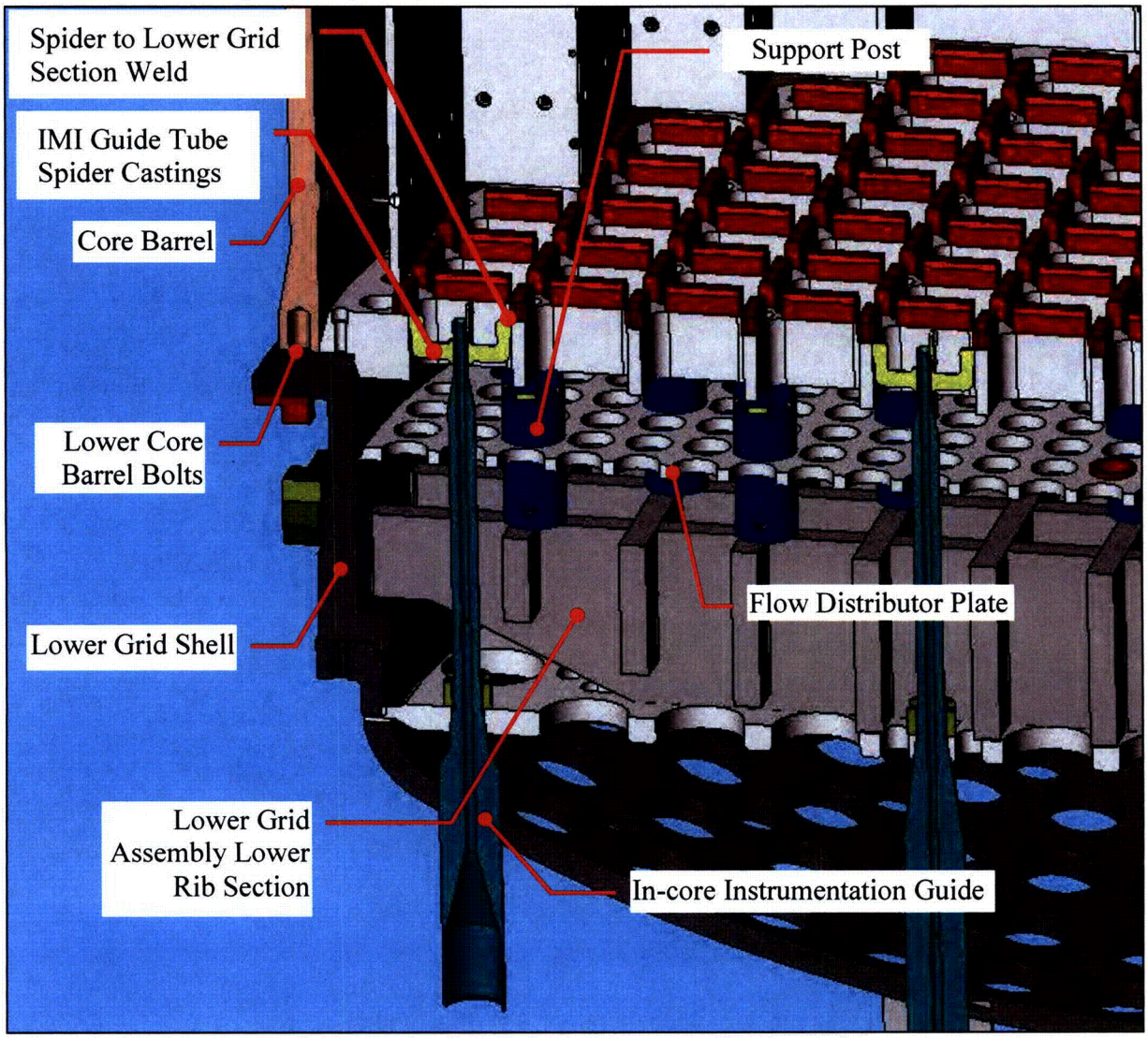

Figure 4-3
Typical lower internals arrangement for B&W-designed PWRs

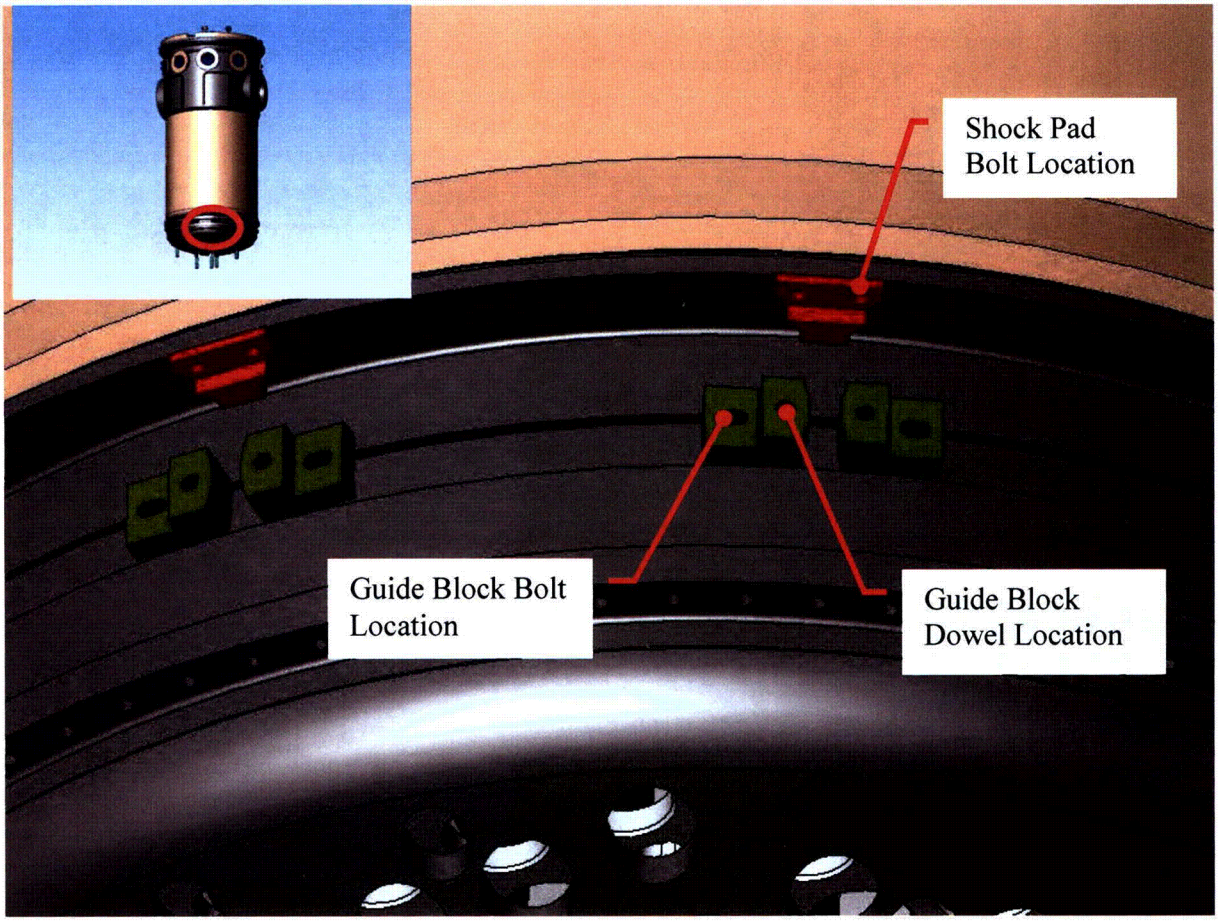

Figure 4-4
Typical guide block and shock pad locations for B&W-designed PWRs

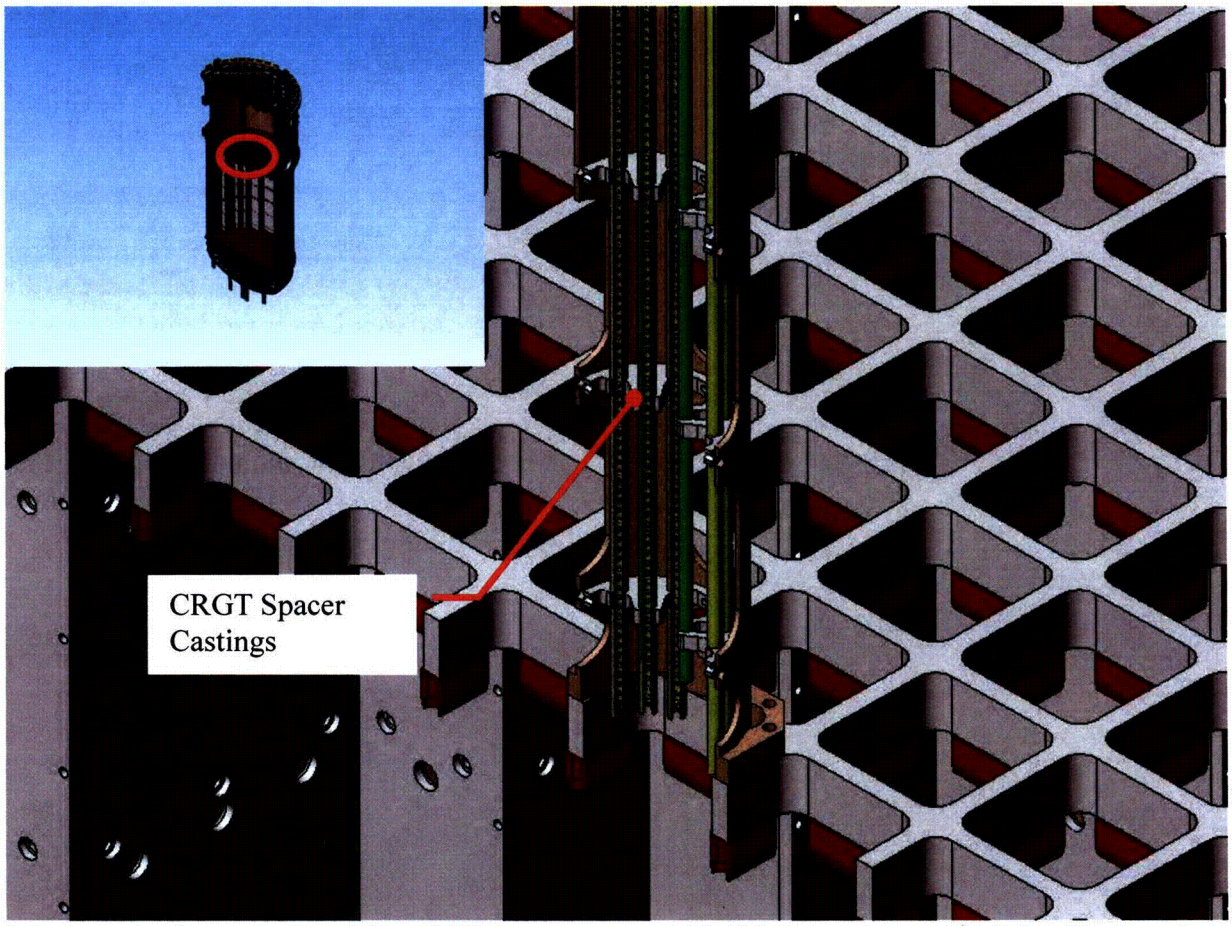

Figure 4-5
Typical control rod guide tube (CRGT) for B&W-designed PWRs (one of 69 CRGTs shown)

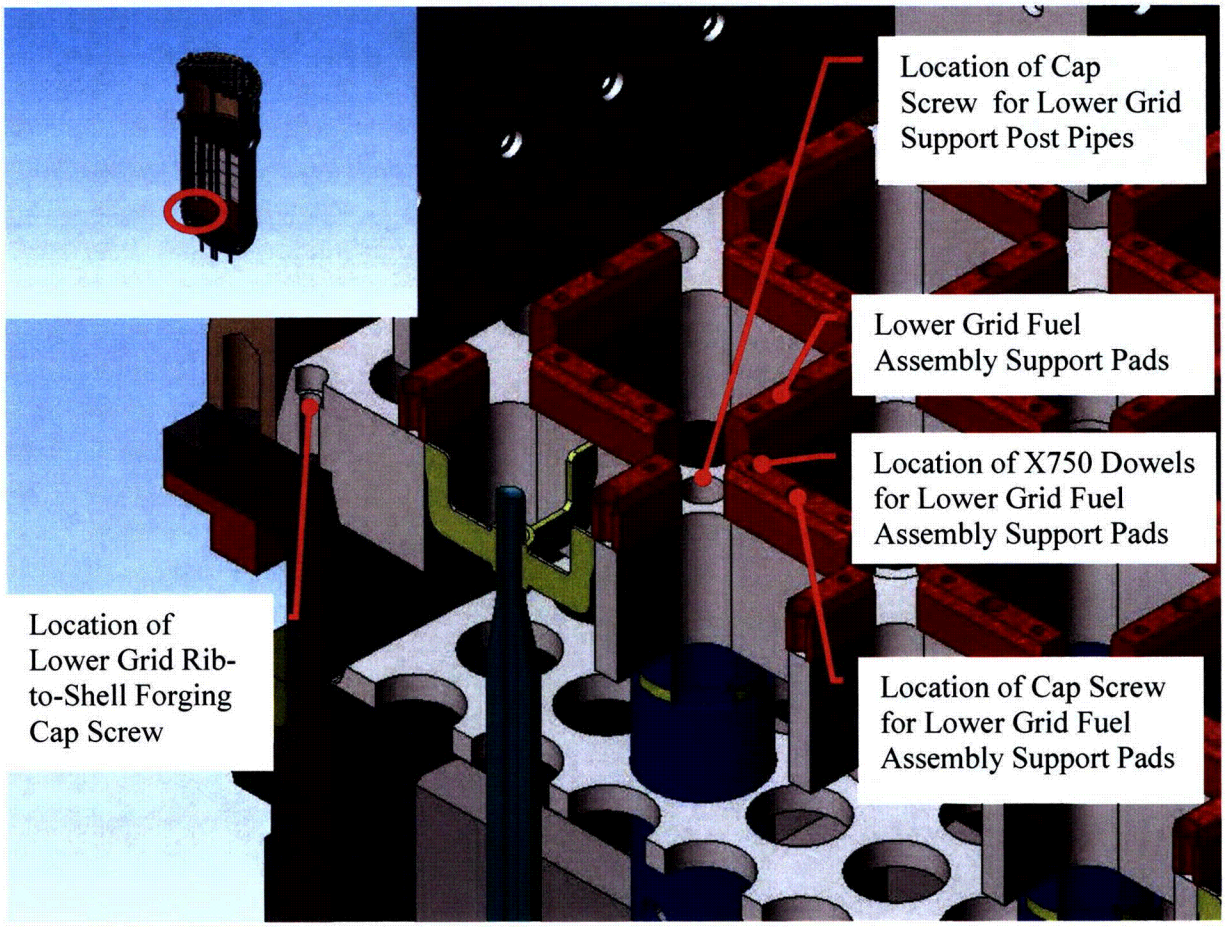

Figure 4-6
Typical lower grid assembly and fuel assembly support pads for B&W-designed PWRs

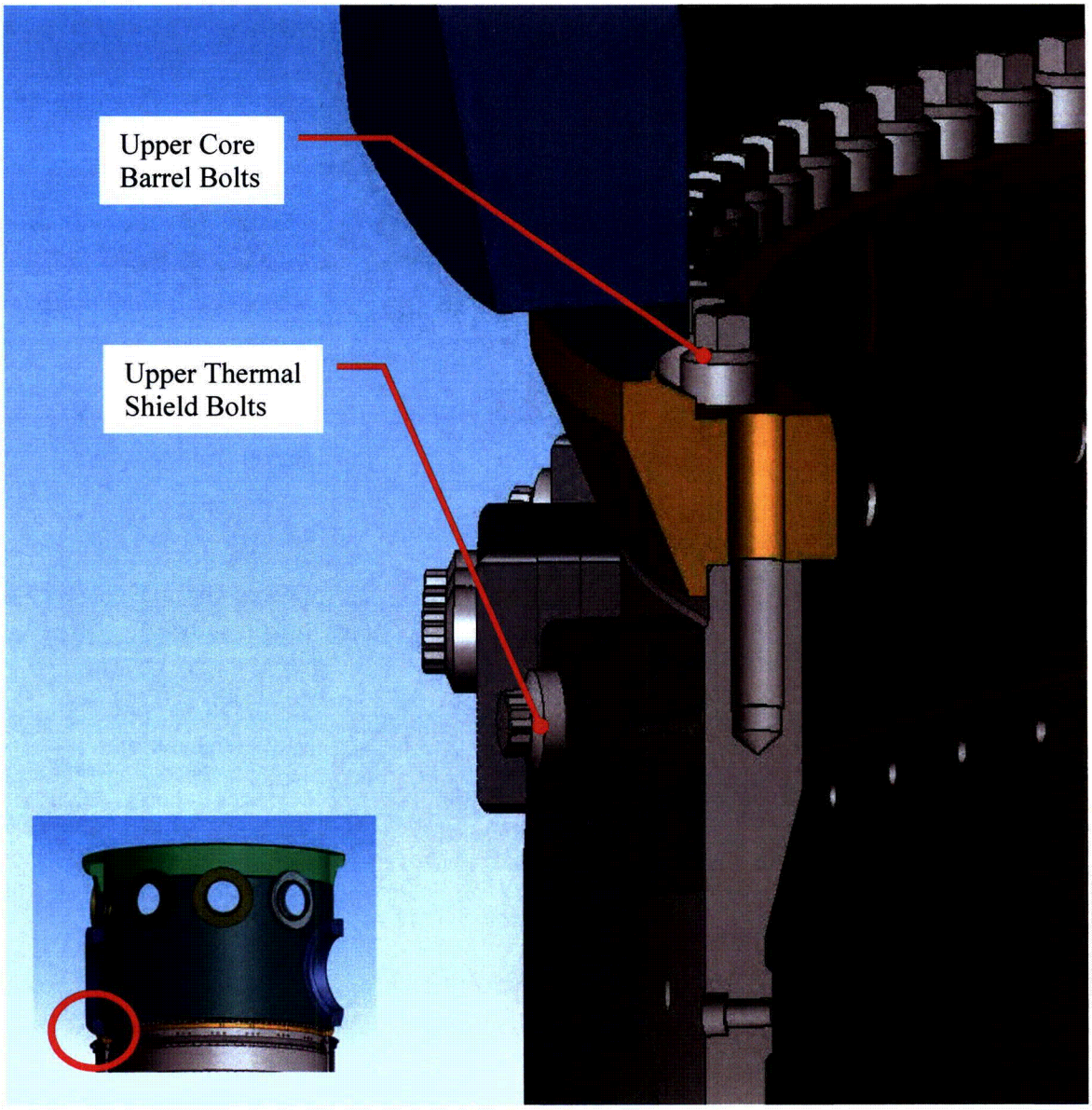

Figure 4-7
Typical upper thermal shield bolts and upper core barrel bolts for B&W-designed PWRs

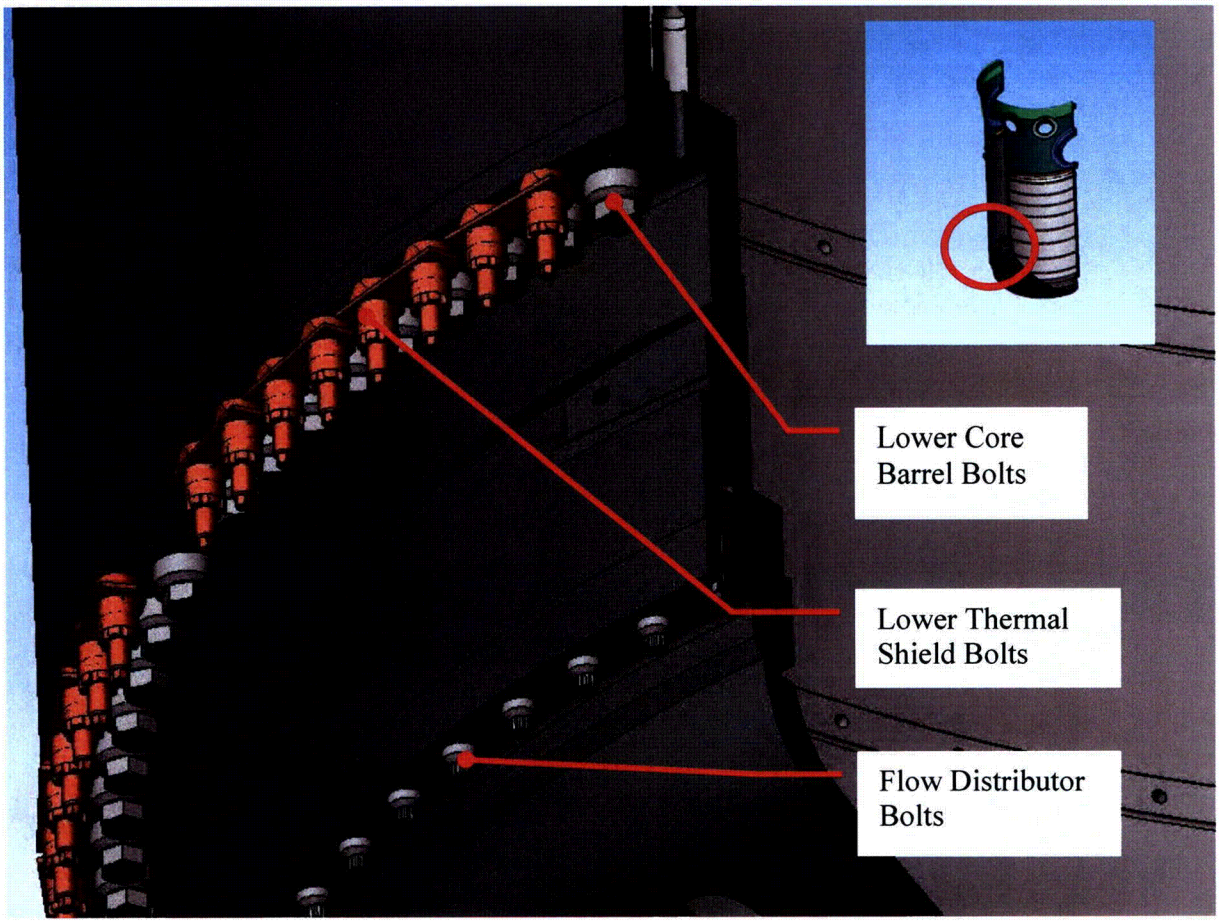

Figure 4-8
Typical lower thermal shield bolts, lower core barrel bolts, and flow distributor bolts for the B&W-designed PWRs

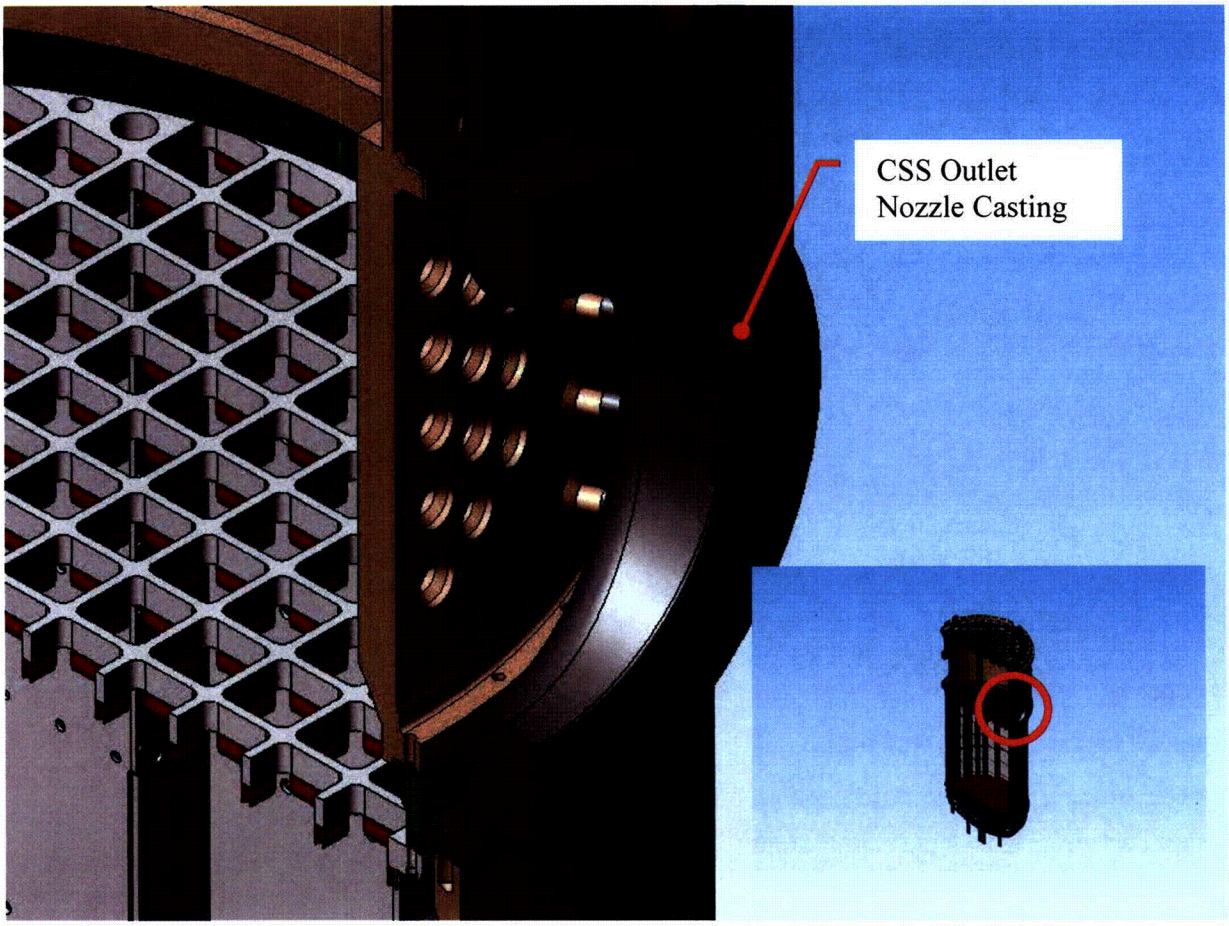

Figure 4-9
Typical core support shield (CSS) outlet nozzle for the B&W-designed PWRs

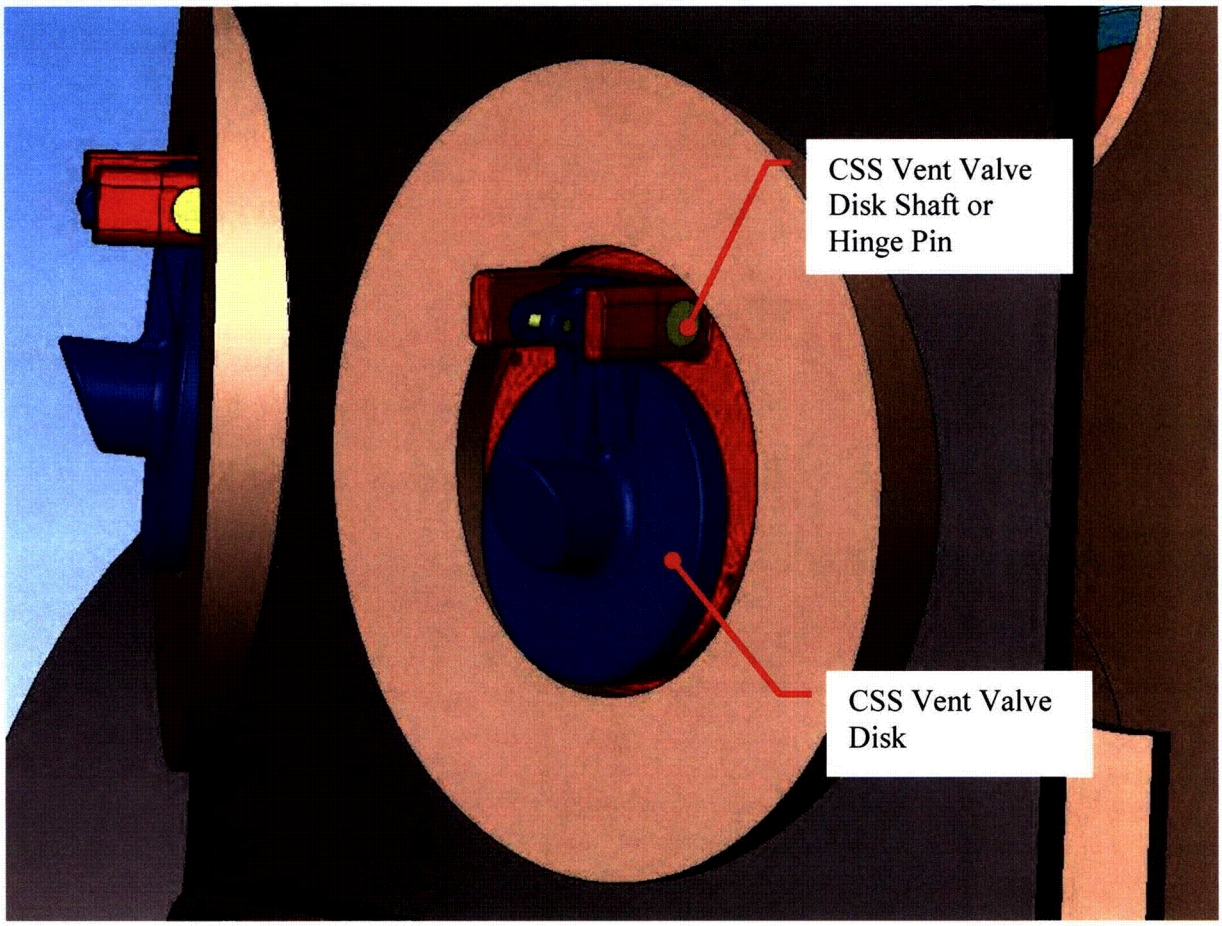

Figure 4-10
Typical core support shield (CSS) vent valve – outside view – for the B&W-designed PWRs

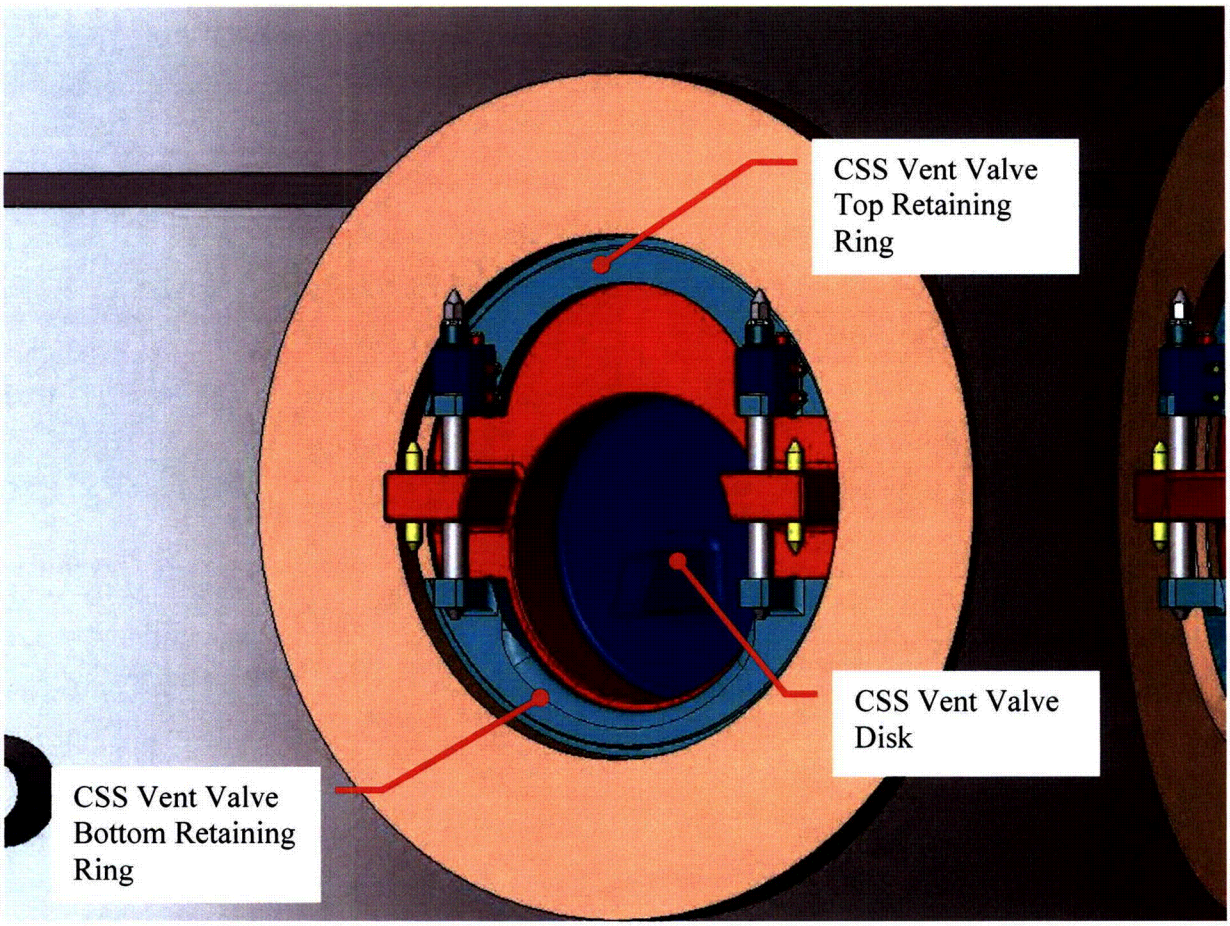

Figure 4-11
Typical core support shield (CSS) vent valve – inside view – for the B&W-designed PWRs

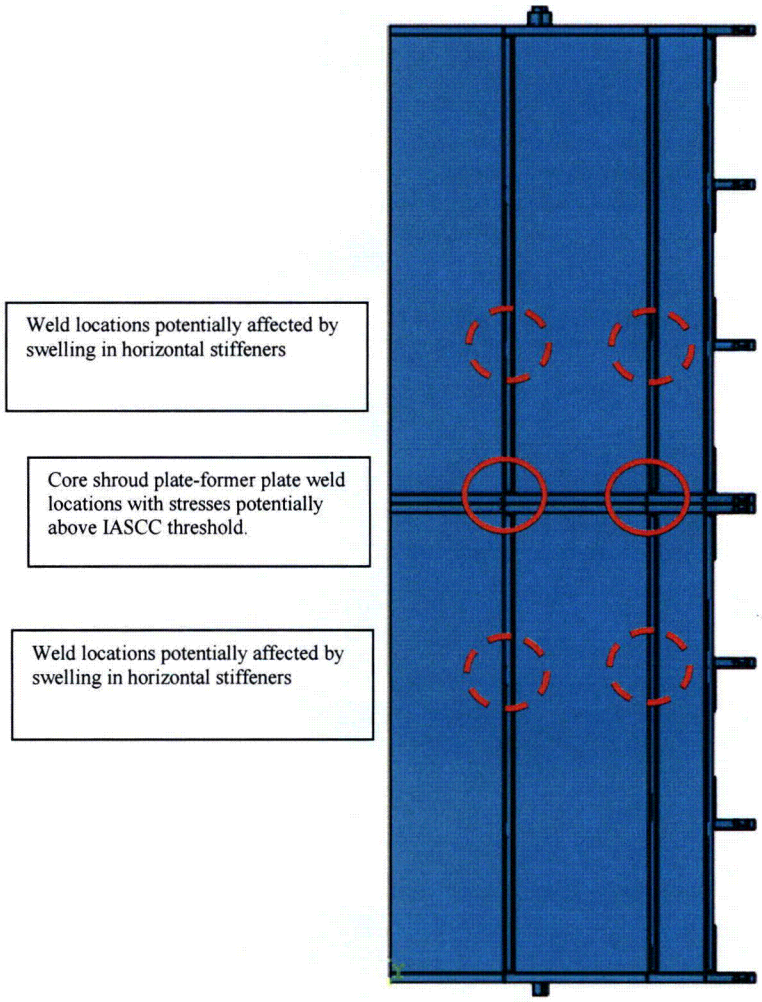

Figure 4-12
Potential crack locations for CE welded core shroud assembled in stacked sections

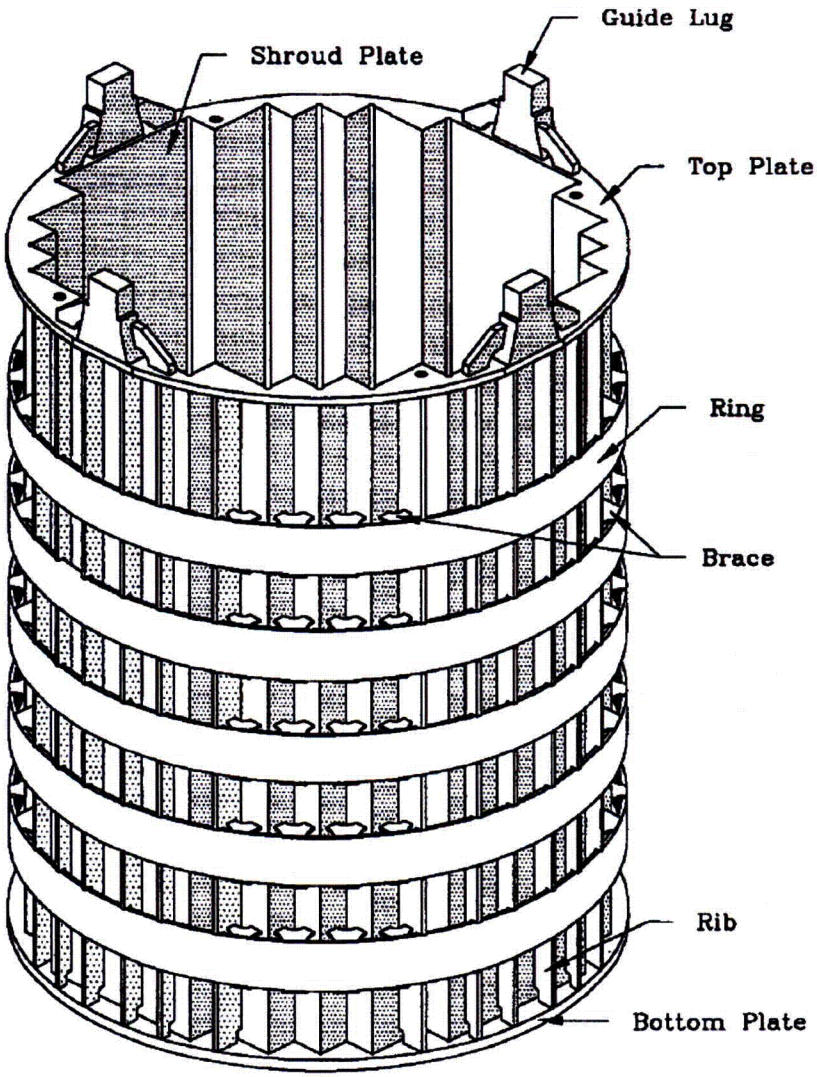

Figure 4-13
CE welded core shroud with full height panels

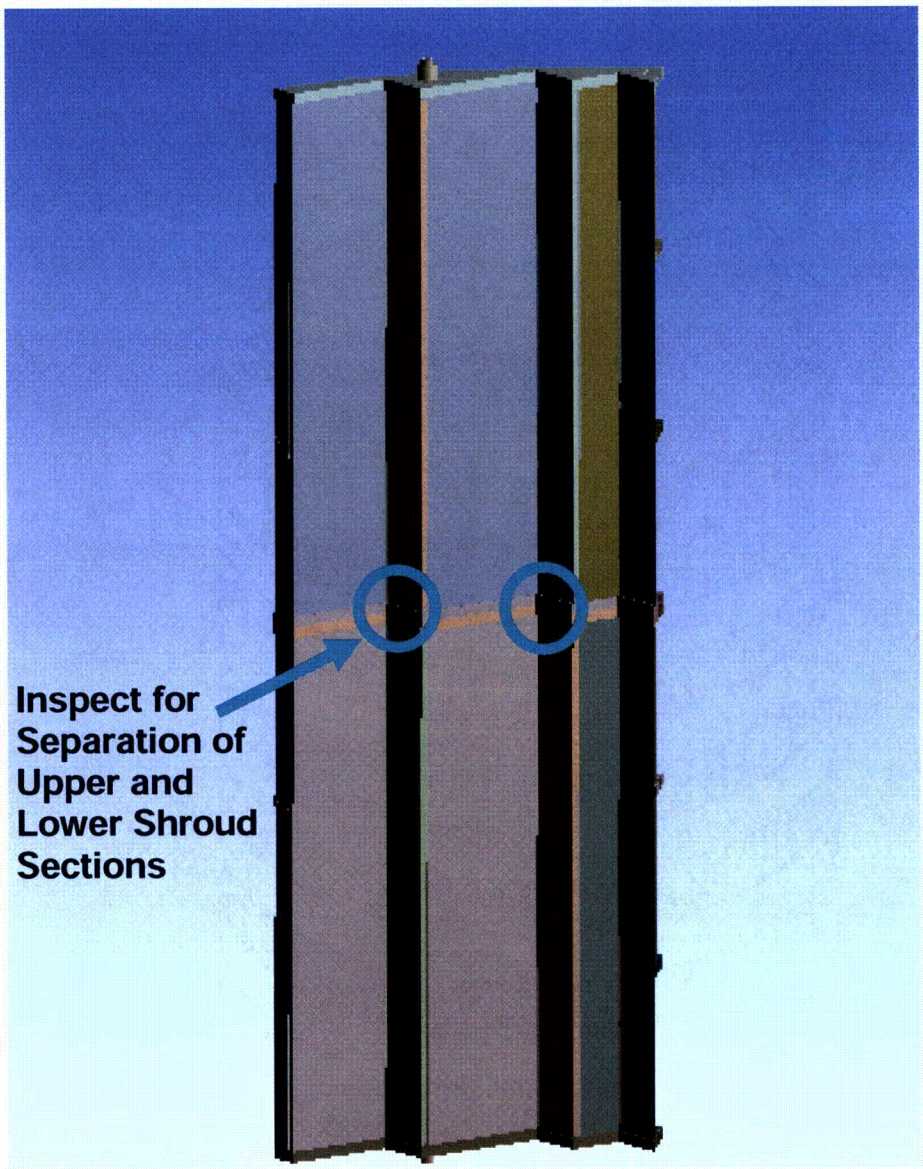

Figure 4-14
Locations of potential separation between core shroud sections caused by swelling induced warping of thick flange plates in CE welded core shroud assembled in stacked sections

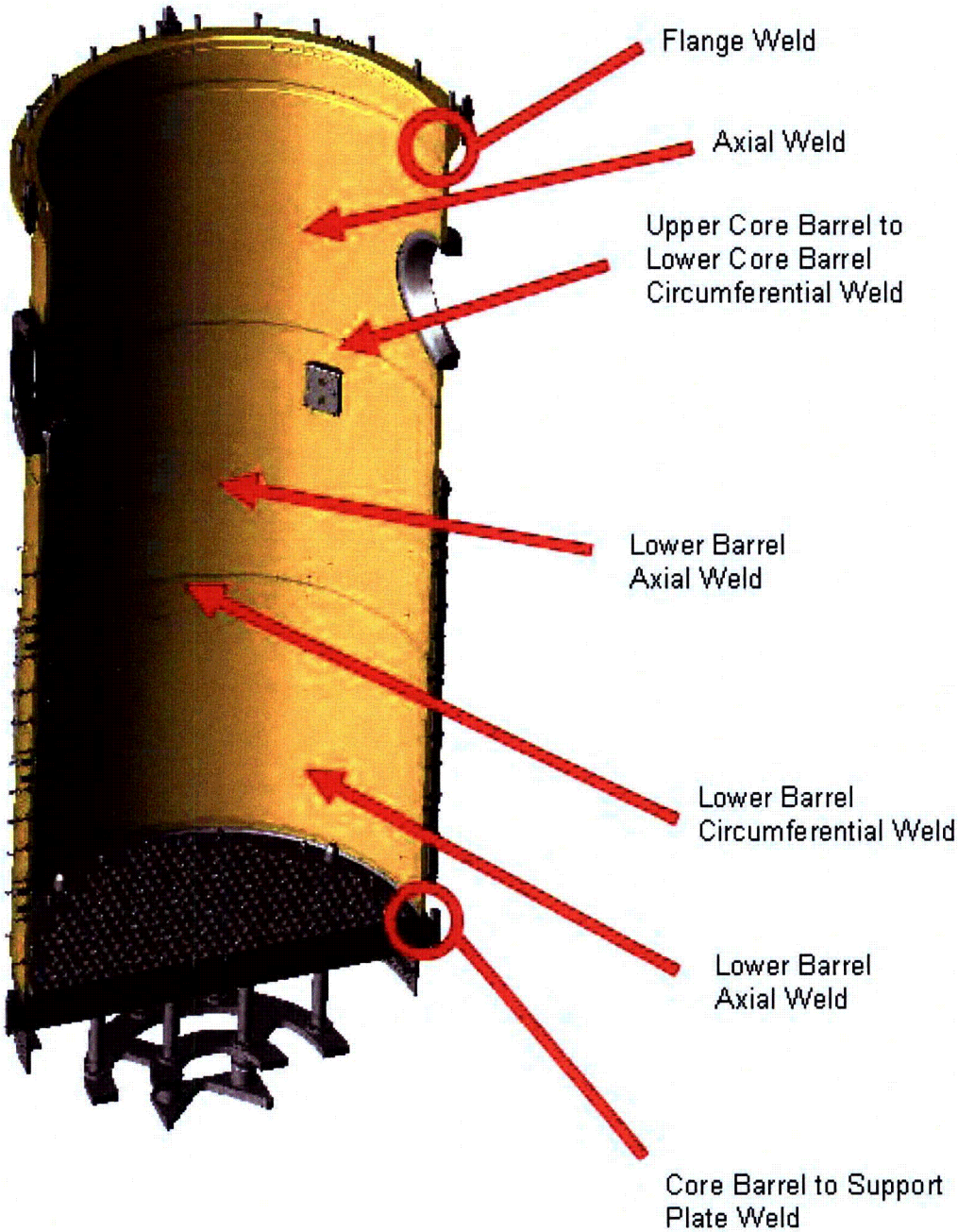

Figure 4-15
Typical CE core support barrel structure

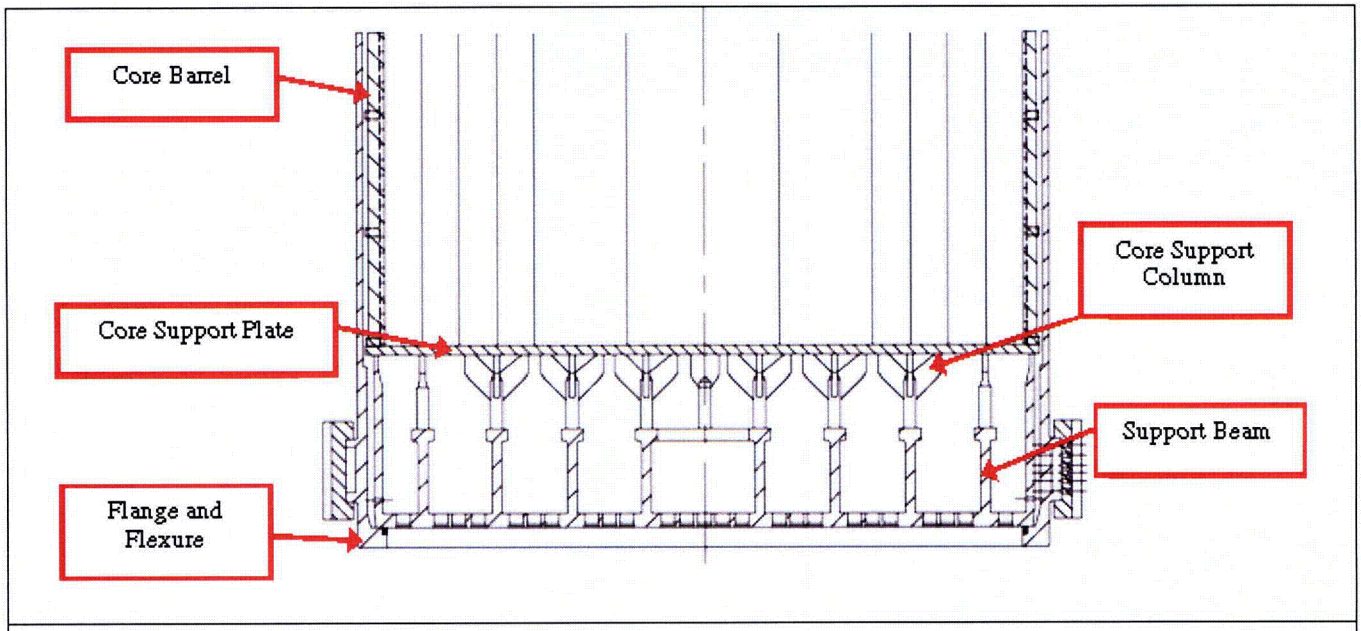

"Winged" Core Support Columns

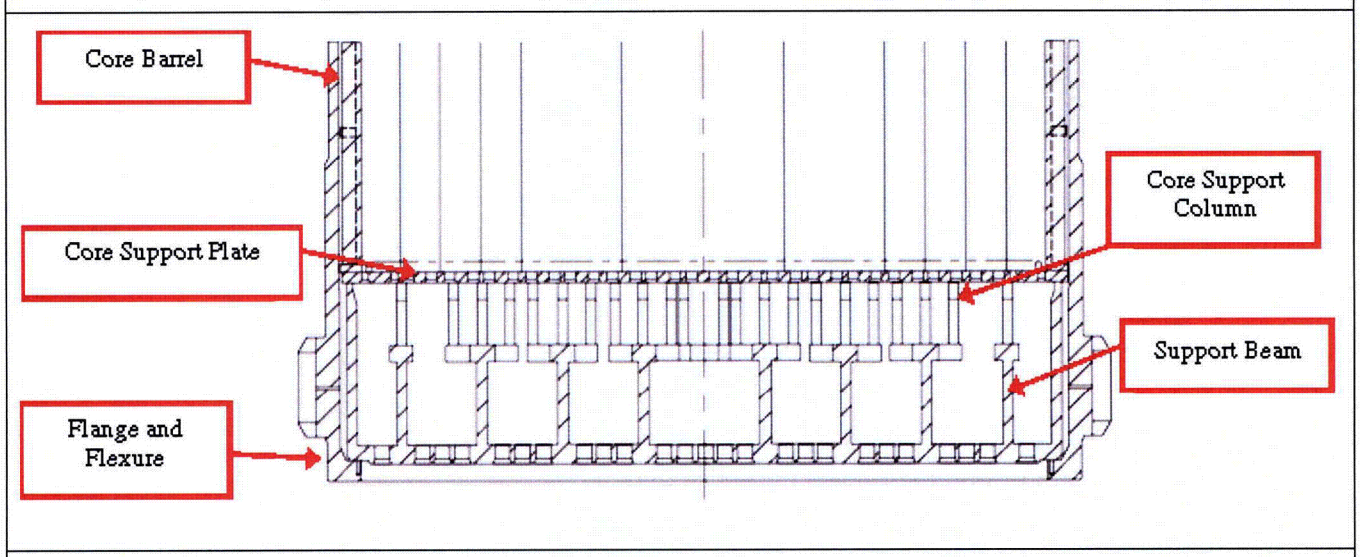

Core Support Columns without "Winged" Design

Figure 4-16
CE lower support structures for welded core shrouds: separate core barrel and lower support structure assembly with lower flange and core support plate

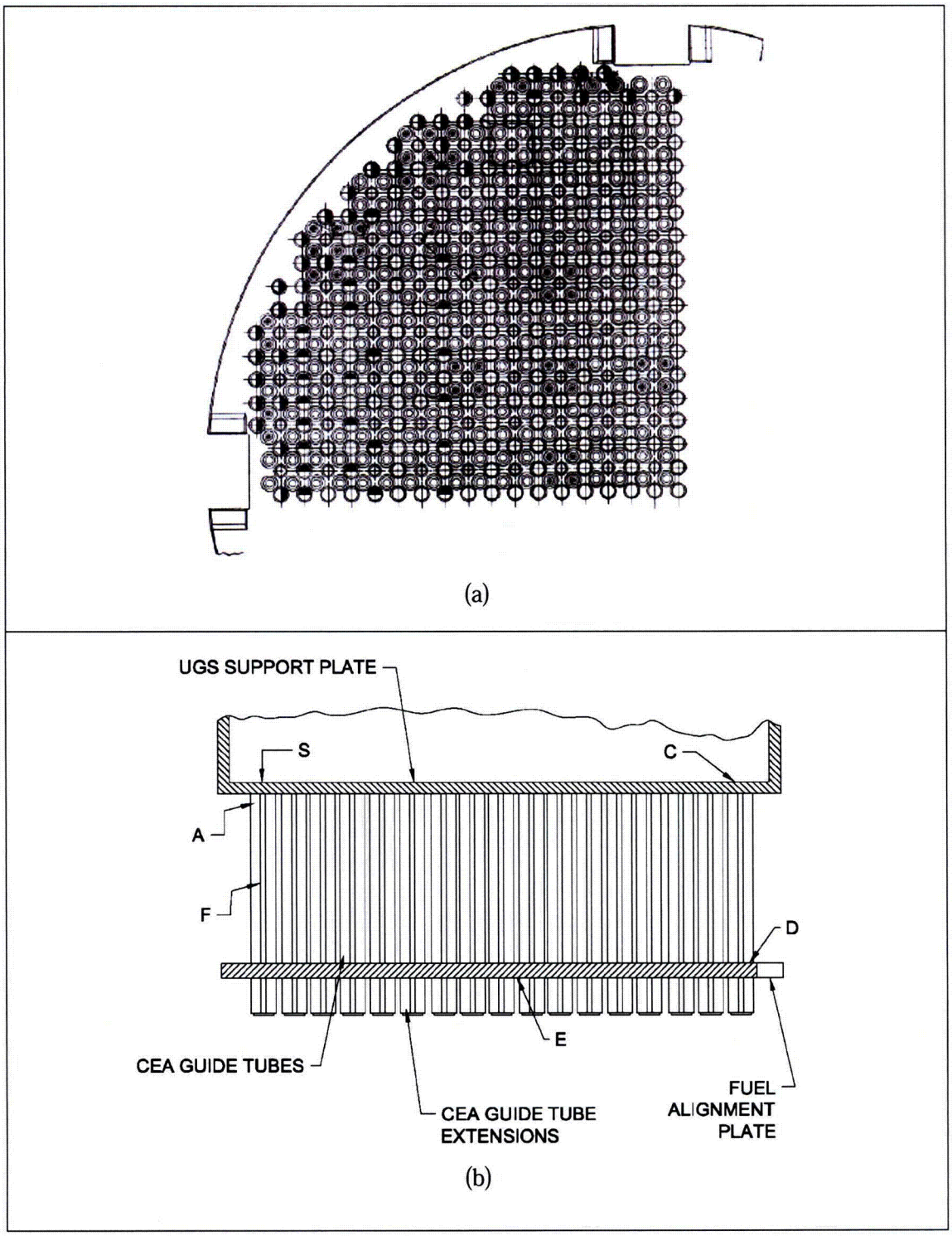

Figure 4-17
(a) Schematic illustration of a portion of the fuel alignment plate, and (b) Radial-view schematic illustration of the guide tubes protruding through the plate in upper internals assembly of CE core shrouds with full-height shroud plates

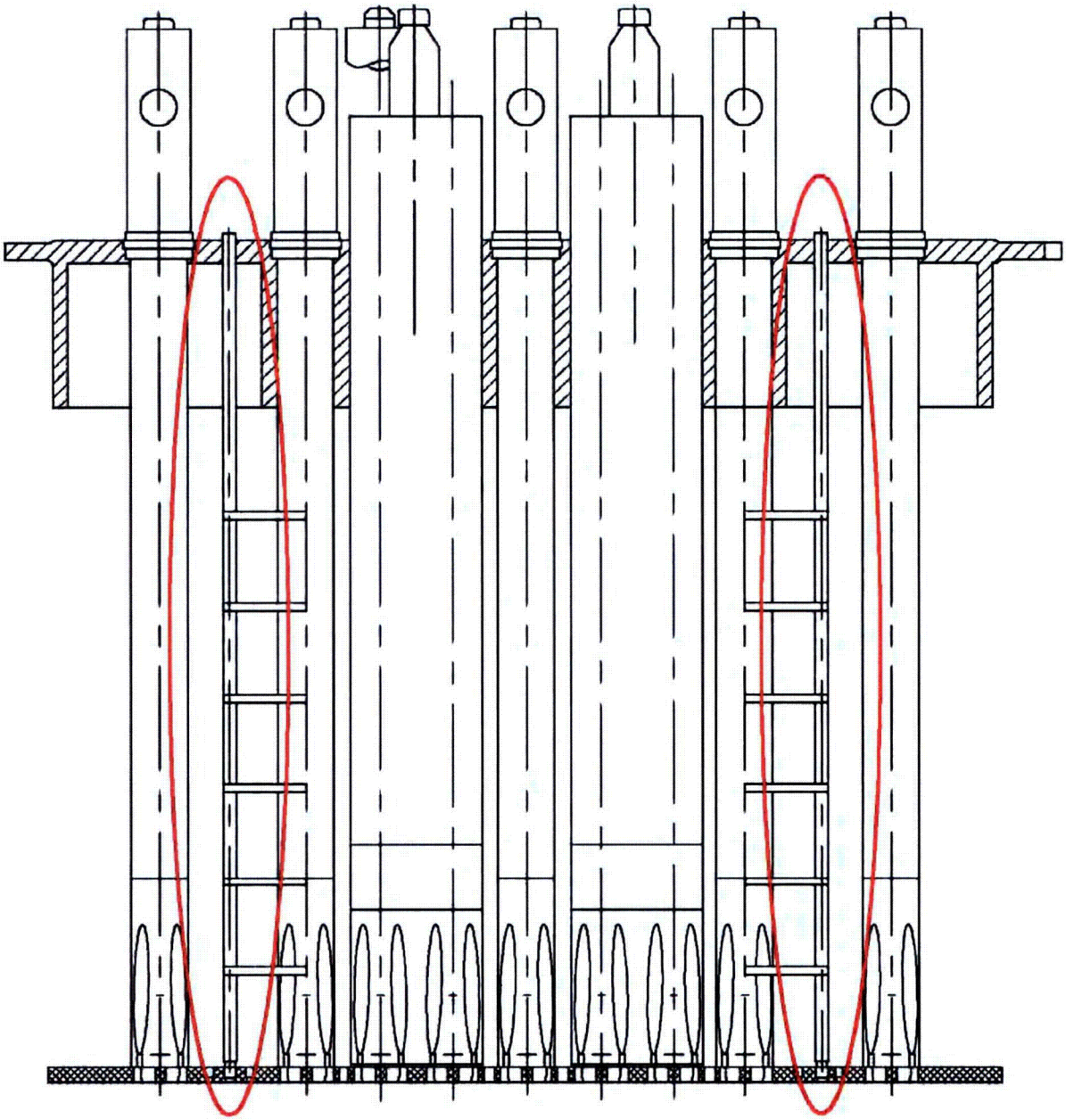

Figure 4-18
CE control element assembly (CEA) shroud instrument tubes (circled in red) are shown, along with the welded supports attaching them to the CEA shroud tube, in this schematic illustration

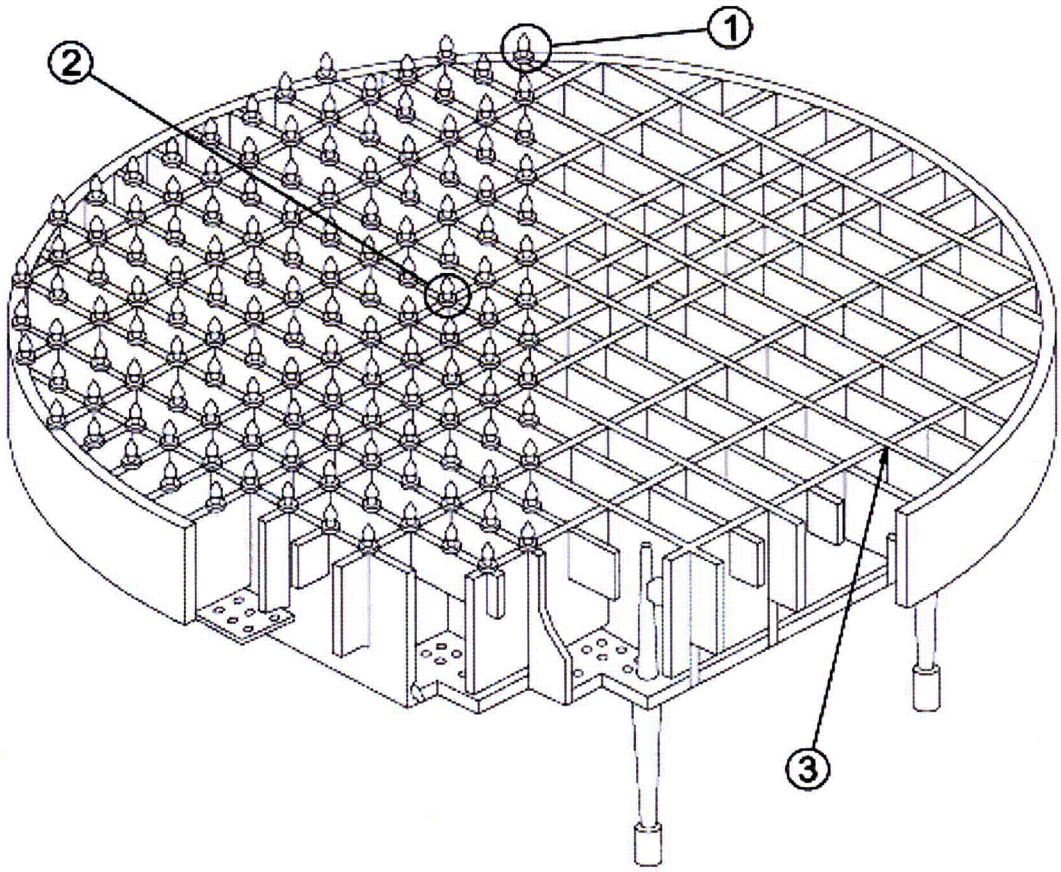

Illustrates the deep beam grid structure (number 3), as well as the fuel alignment pins (numbers 1 and 2)

Figure 4-19
Isometric view of the lower support structure in the CE core shrouds with full-height shroud plates units. Fuel rests on alignment pins

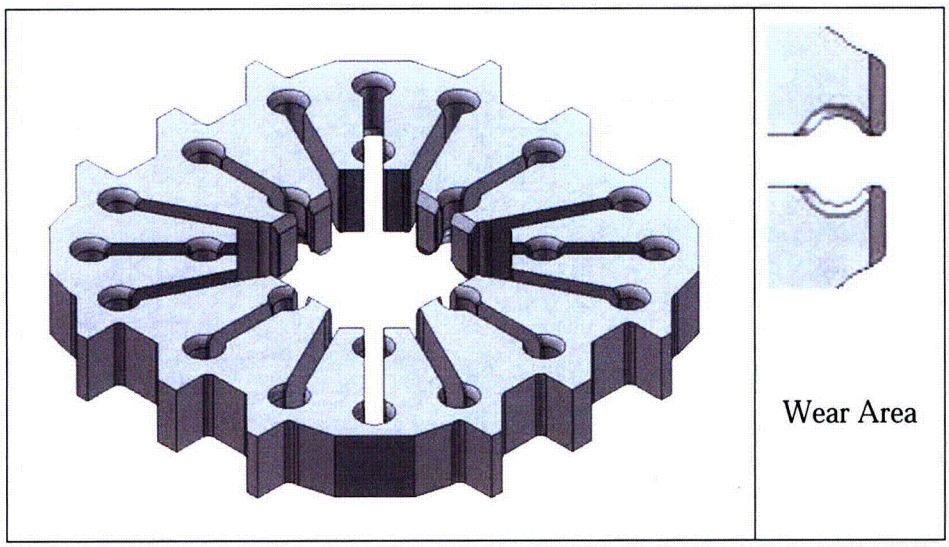

Figure 4-20
Typical Westinghouse control rod guide card (17x17 fuel assembly)

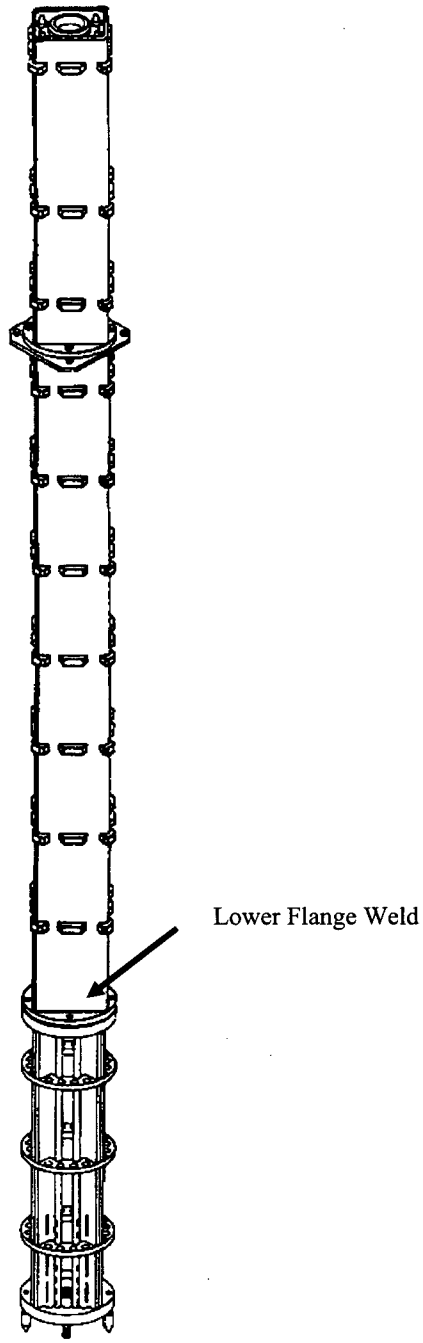

Figure 4-21
Typical Westinghouse control rod guide tube assembly

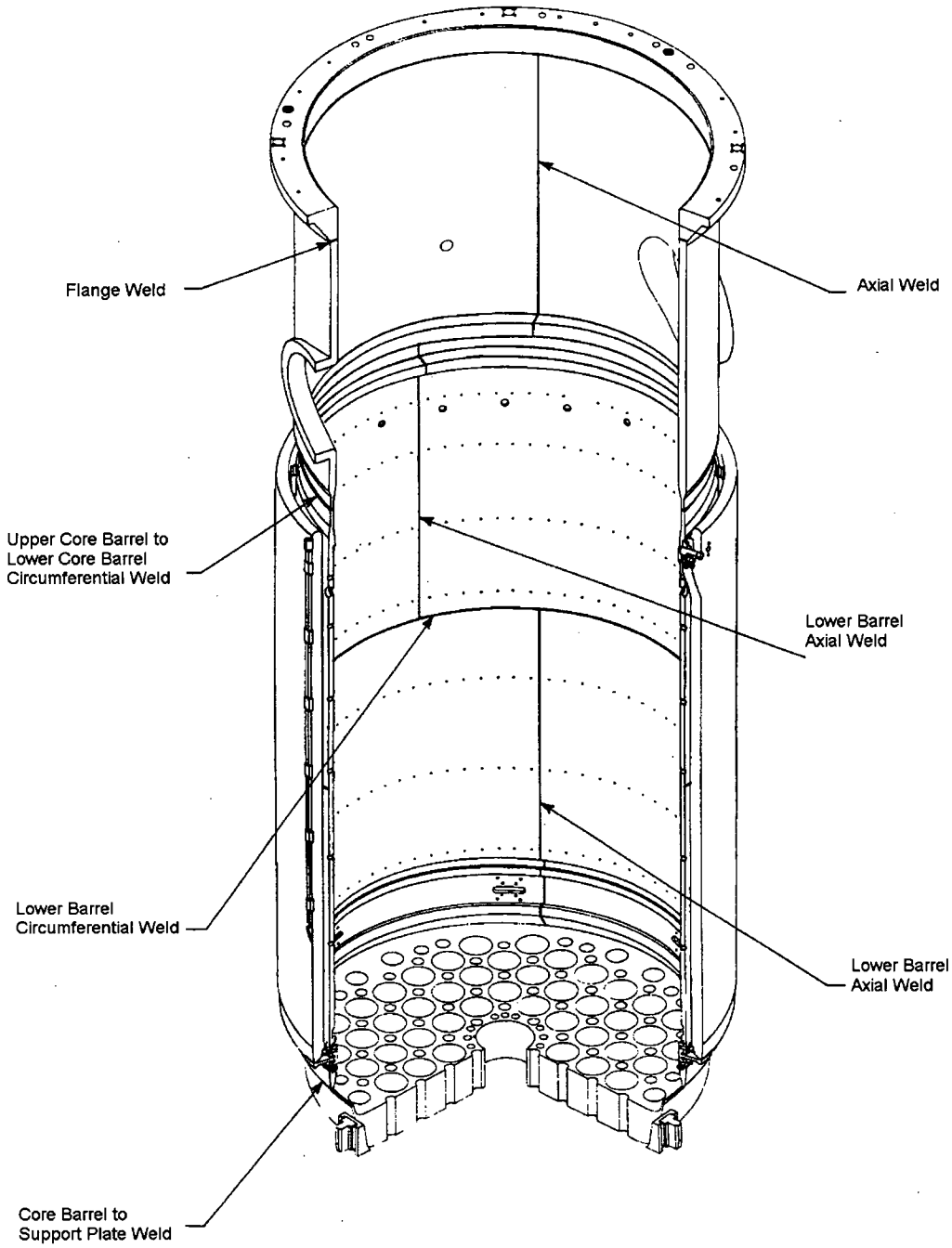

Figure 4-22
Major fabrication welds in typical Westinghouse core barrel

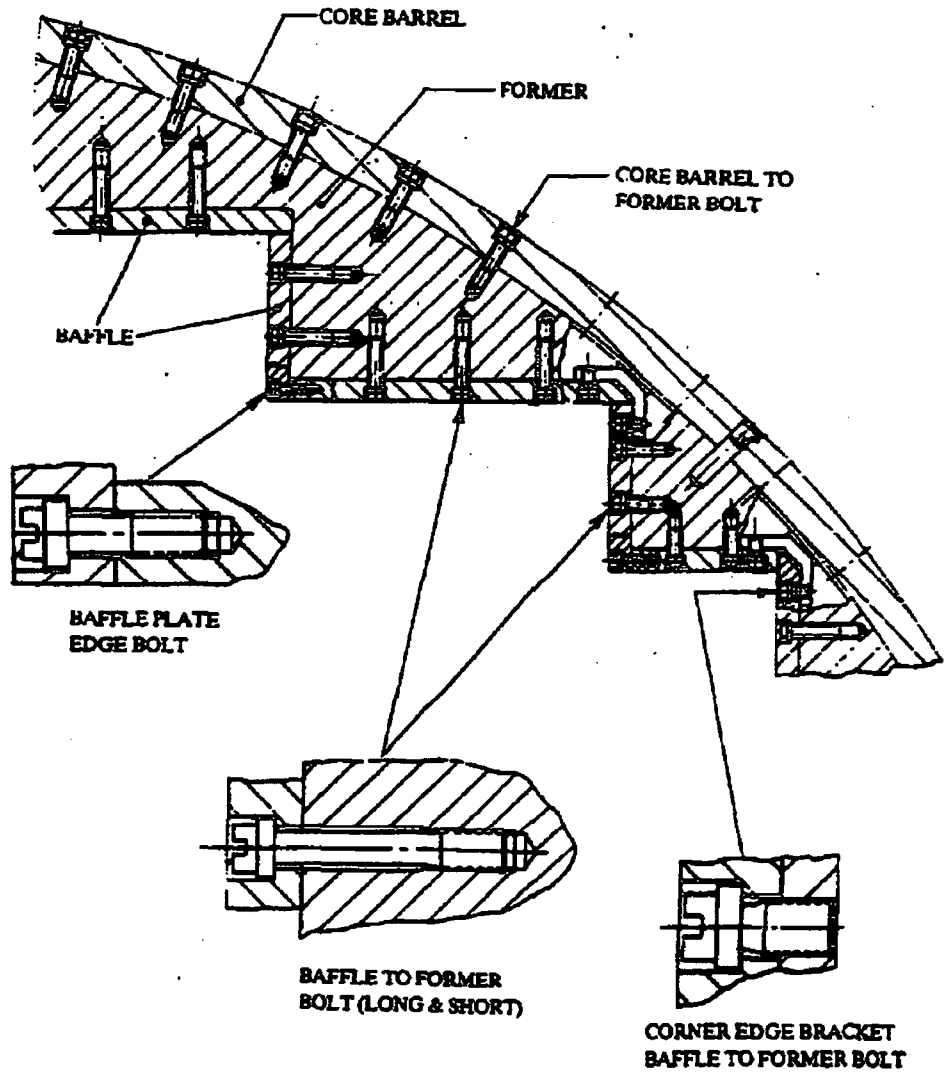

Figure 4-23
Bolt locations in typical Westinghouse baffle-former-barrel structure. In CE plants with bolted shrouds, the core shroud bolts are equivalent to baffle-former bolts and barrel-shroud bolts are equivalent to barrel-former bolts

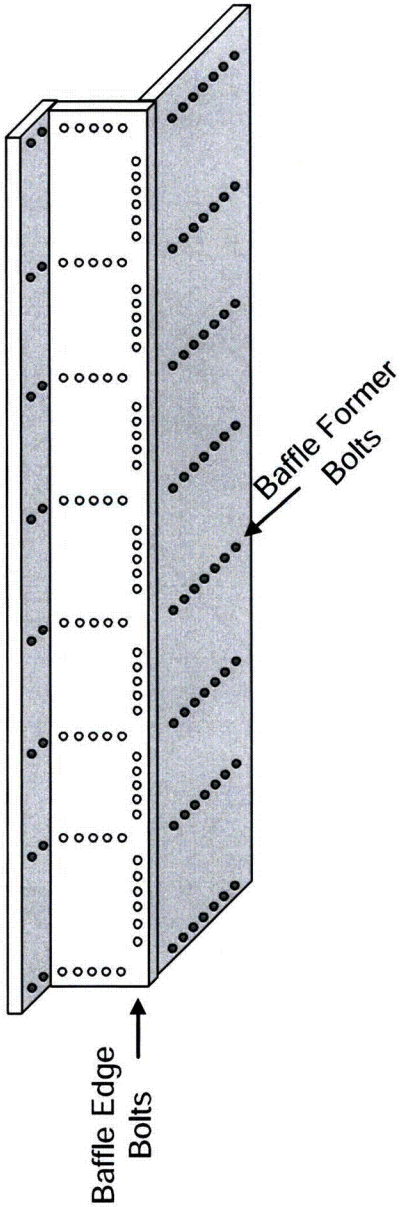

Figure 4-24
Baffle-edge bolt and baffle-former bolt locations at high fluence seams in bolted baffle-former assembly (note: equivalent baffle-former bolt locations in bolted CE shroud designs are core shroud bolts)

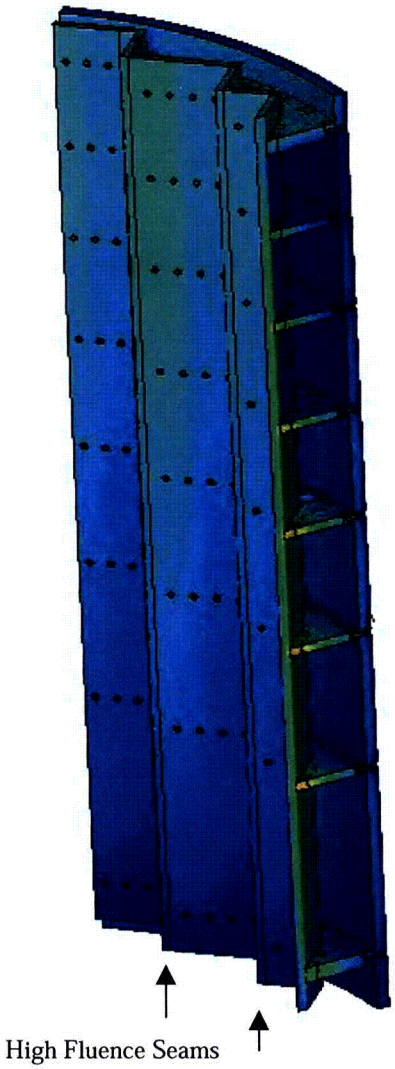

Figure 4-25
High fluence seam locations in Westinghouse baffle-former assembly

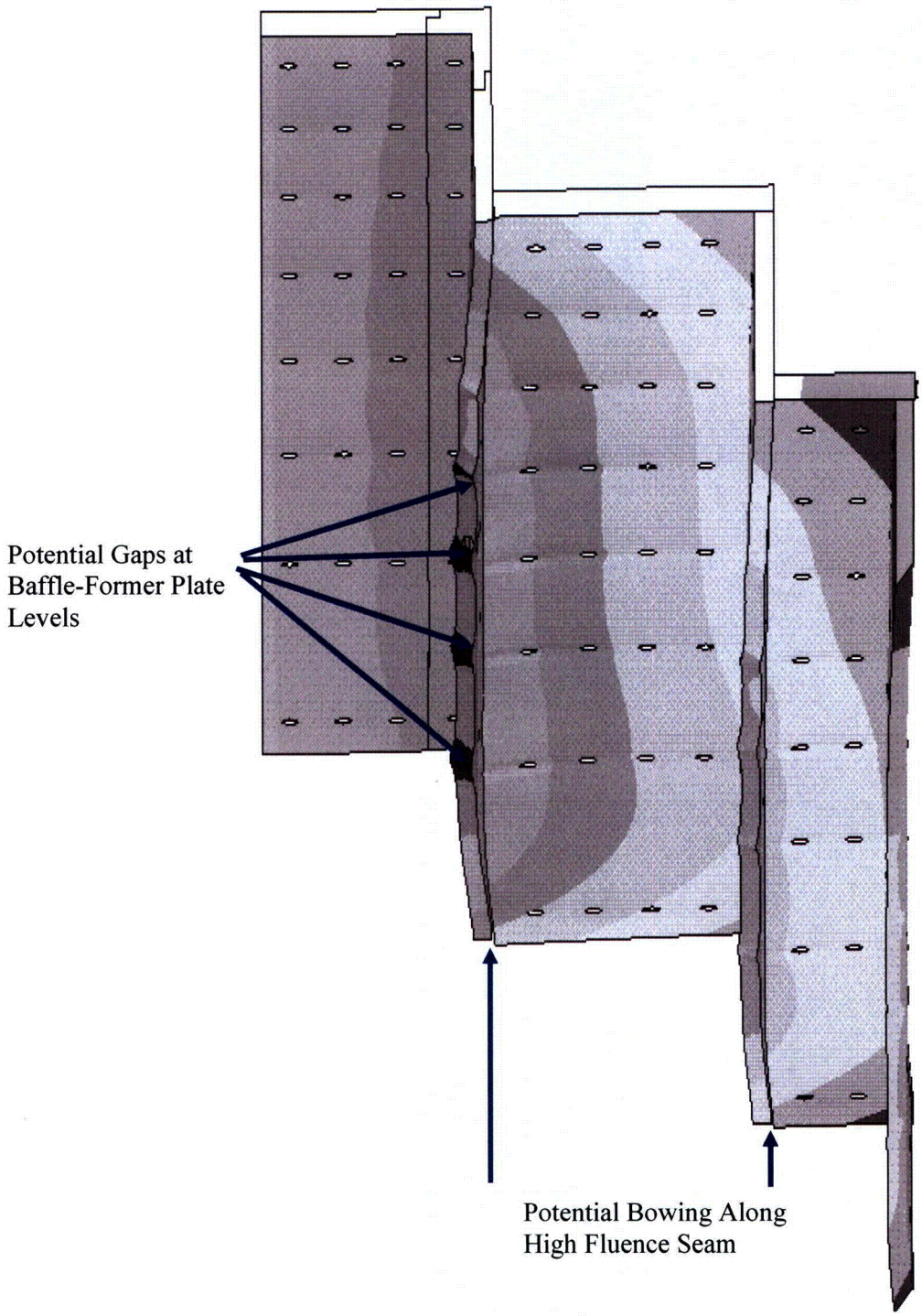

Figure 4-26
Exaggerated view of void swelling induced distortion in Westinghouse baffle-former assembly. This figure also applies to bolted CE shroud designs

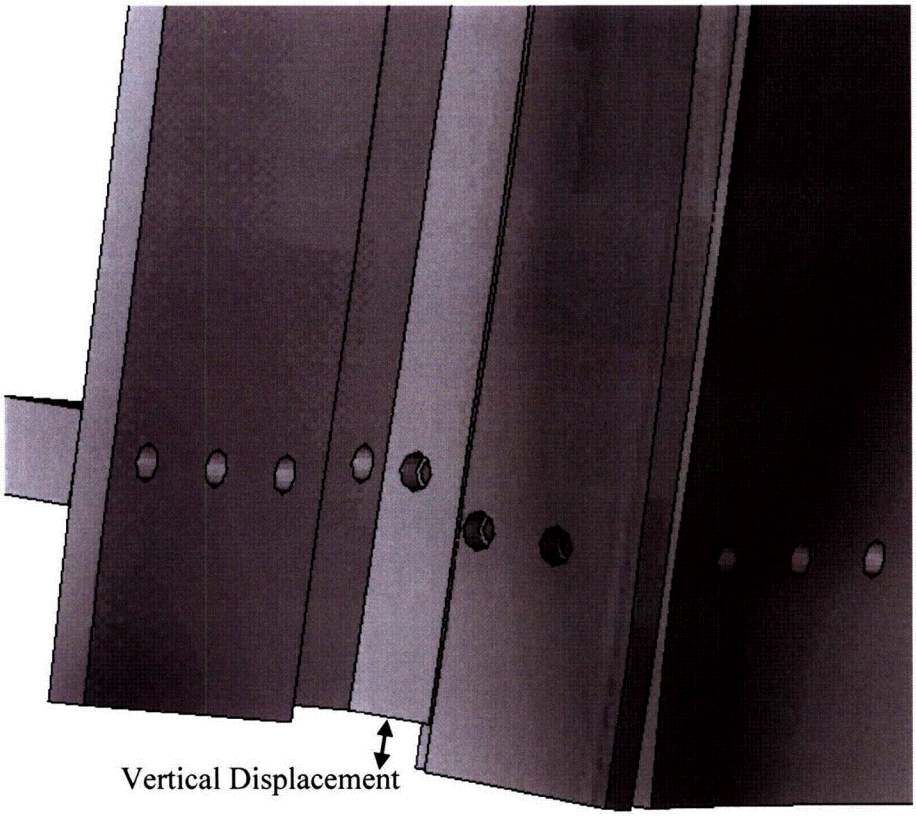

Figure 4-27
Vertical displacement of Westinghouse baffle plates caused by void swelling. This figure also applies to bolted CE shroud designs

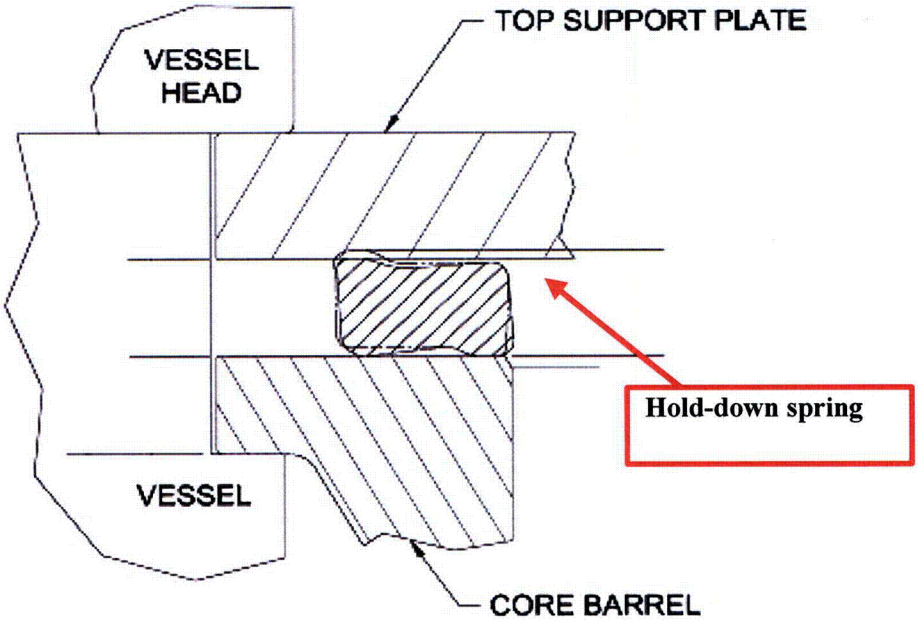

Figure 4-28
Schematic cross-sections of the Westinghouse hold-down springs

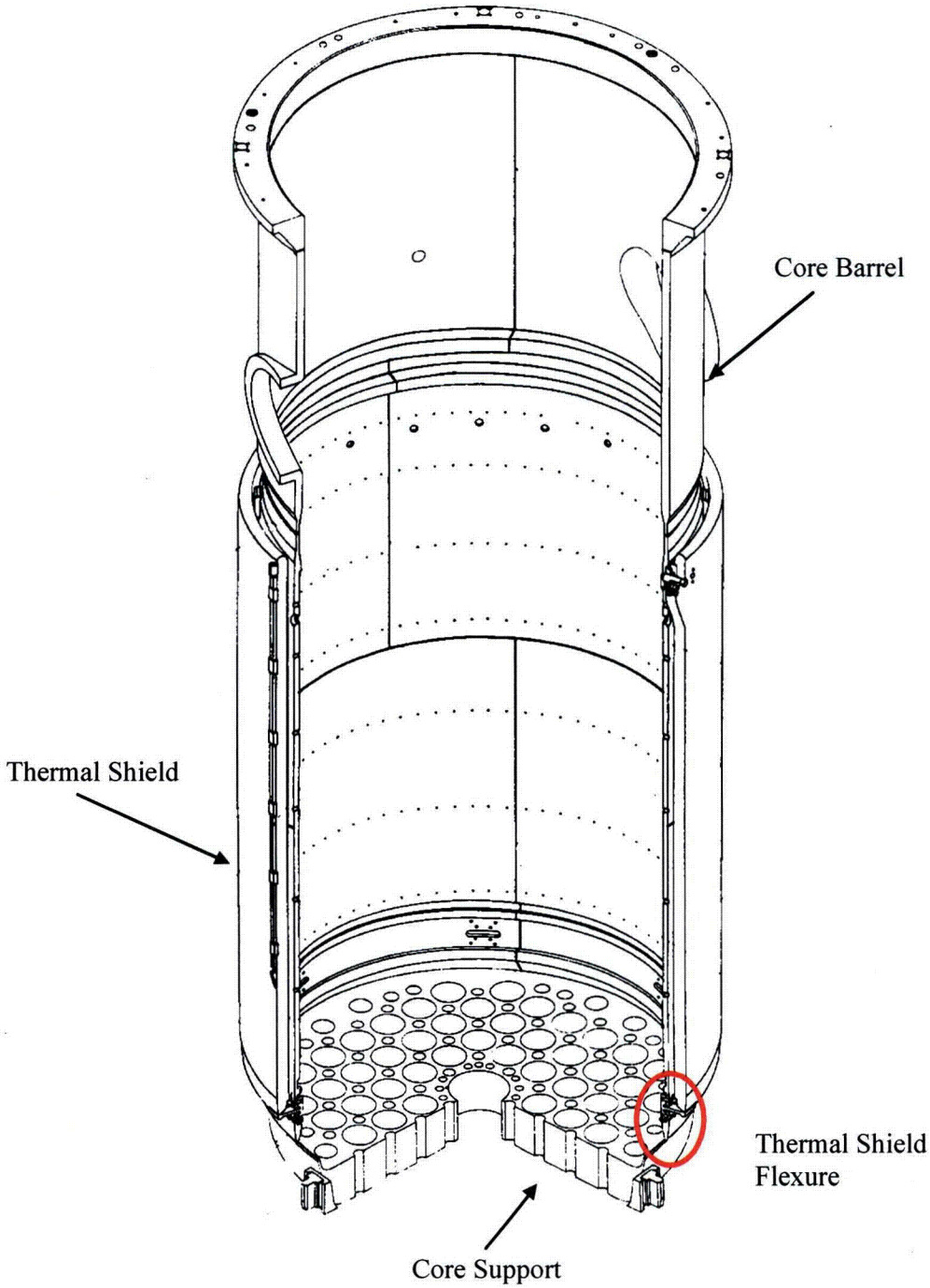

Figure 4-29
Location of Westinghouse thermal shield flexures

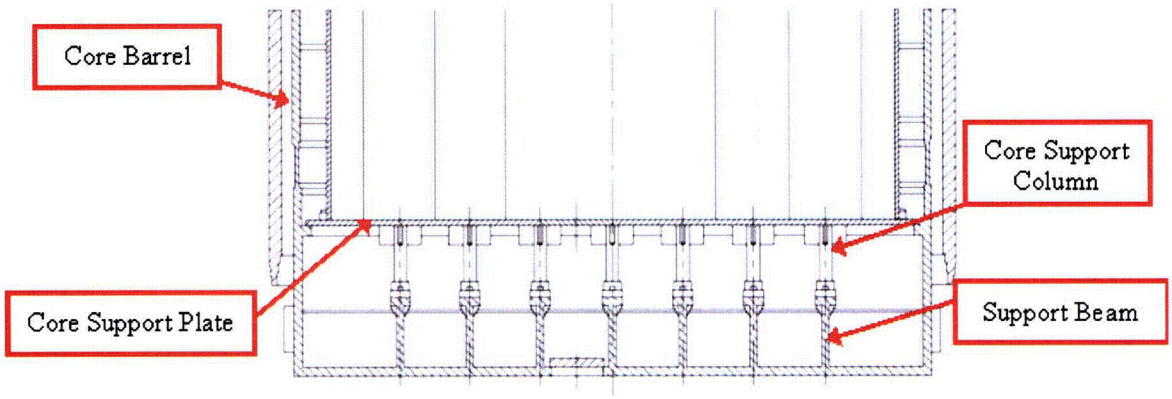

Figure 4-30
CE lower support structure assembly for plants with integrated core barrel and lower support structure with a core support plate (this design does not contain a lower core barrel flange)

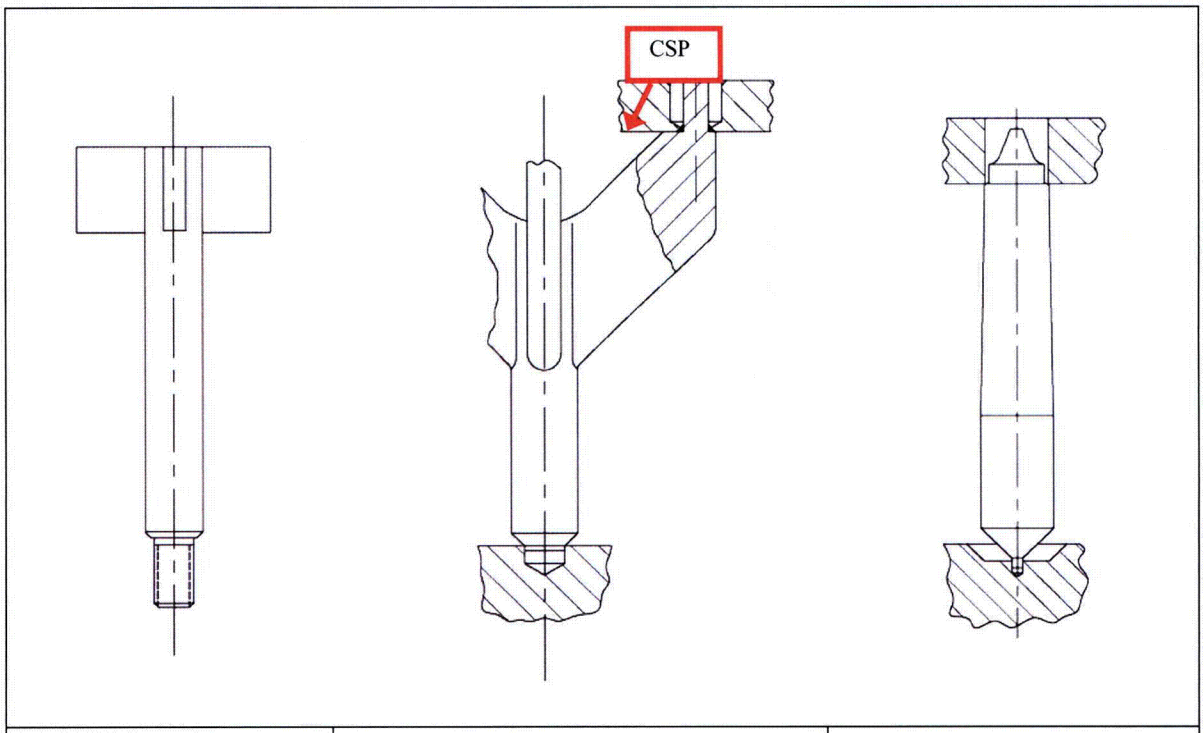

a)	b)	c)

a) Early support column design
b) "Winged" support column design and plants with second generation core support assemblies
c) Later support column design used in plants with second generation core support assemblies

Figure 4-31
CE core support columns

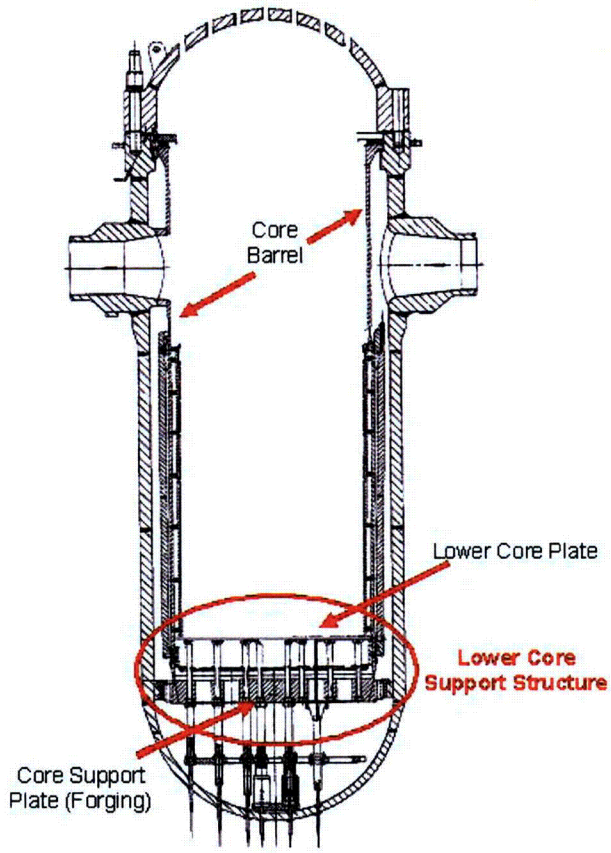

Figure 4-32
Schematic indicating location of Westinghouse lower core support structure. Additional details shown in Figure 4-33

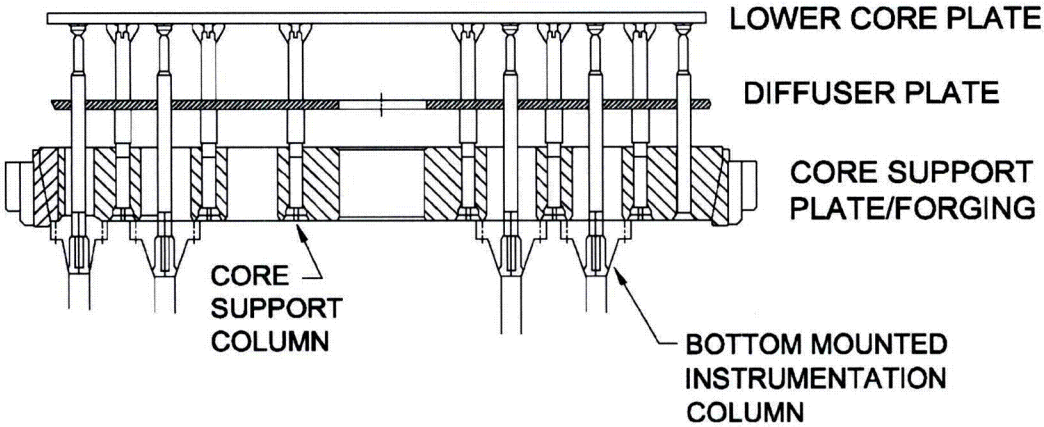

Figure 4-33
Westinghouse lower core support structure and bottom mounted instrumentation columns. Core support column bolts fasten the core support columns to the lower core plate

Figure 4-34
Typical Westinghouse core support column. Core support column bolts fasten the top of the support column to the lower core plate

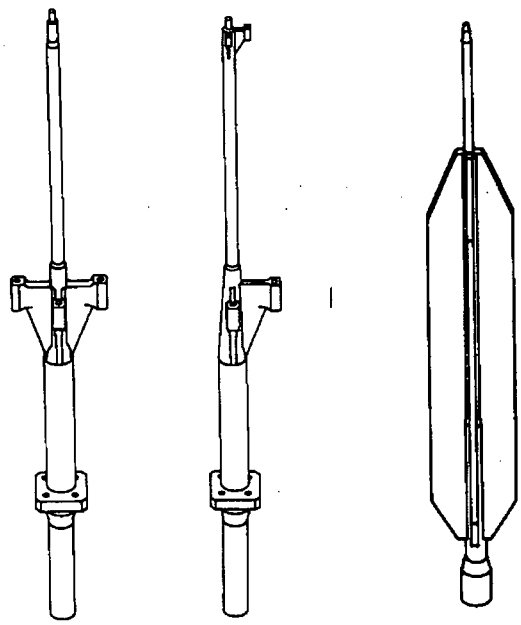

Figure 4-35
Examples of Westinghouse bottom mounted instrumentation column designs

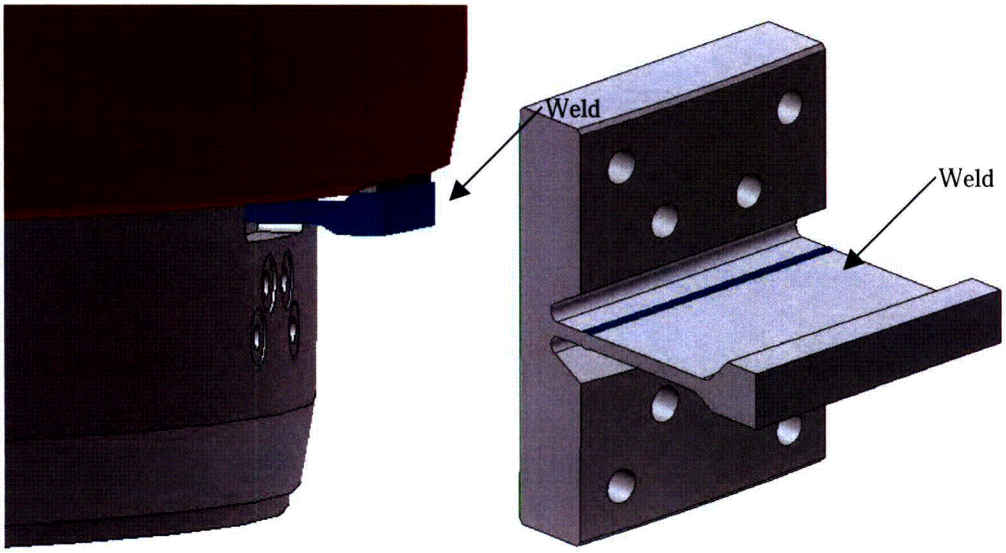

Figure 4-36
Typical Westinghouse thermal shield flexure

4.4 Existing Programs Component Requirements

Content deleted - EPRI/MRP Proprietary Information.

Table 4-7
B&W plants Existing Programs components

Table 4-8
CE plants Existing Programs components

Content deleted - EPRI/MRP Proprietary Information.

Table 4-9
Westinghouse plants Existing Programs components

Content deleted - EPRI/MRP Proprietary Information.

Content deleted - EPRI/MRP Proprietary Information.

4.4.1 B&W Components

Content deleted - EPRI/MRP Proprietary Information.

4.4.2 CE Components

Content deleted - EPRI/MRP Proprietary Information.

Content deleted - EPRI/MRP Proprietary Information.

4.4.3 Westinghouse Components

Content deleted - EPRI/MRP Proprietary Information.

Content deleted - EPRI/MRP Proprietary Information.

4.5 No Additional Measures Components

Content deleted - EPRI/MRP Proprietary Information.

5
EXAMINATION ACCEPTANCE CRITERIA AND EXPANSION CRITERIA

Content deleted - EPRI/MRP Proprietary Information.

Table 5-1
B&W plants examination acceptance and expansion criteria

Content deleted - EPRI/MRP Proprietary Information.

Table 5-1
B&W plants examination acceptance and expansion criteria (continued)

Table 5-1
B&W plants examination acceptance and expansion criteria (continued)

Content deleted - EPRI/MRP Proprietary Information.

Table 5-1
B&W plants examination acceptance and expansion criteria (continued)

Content deleted - EPRI/MRP Proprietary Information.

Table 5-1
B&W plants examination acceptance and expansion criteria (continued)

Content deleted - EPRI/MRP Proprietary Information.

Table 5-1
B&W plants examination acceptance and expansion criteria (continued)

Content deleted - EPRI/MRP Proprietary Information.

Table 5-1
B&W plants examination acceptance and expansion criteria (continued)

Content deleted - EPRI/MRP Proprietary Information.

Table 5-2
CE plants examination acceptance and expansion criteria

Content deleted - EPRI/MRP Proprietary Information.

Table 5-2
CE plants examination acceptance and expansion criteria (continued)

Content deleted - EPRI/MRP Proprietary Information.

Table 5-2
CE plants examination acceptance and expansion criteria (continued)

Content deleted - EPRI/MRP Proprietary Information.

Table 5-2
CE plants examination acceptance and expansion criteria (continued)

Content deleted - EPRI/MRP Proprietary Information.

Table 5-2
CE plants examination acceptance and expansion criteria (continued)

Content deleted - EPRI/MRP Proprietary Information.

Table 5-2
CE plants examination acceptance and expansion criteria (continued)

Content deleted - EPRI/MRP Proprietary Information.

Table 5-3
Westinghouse plants examination acceptance and expansion criteria

Content deleted - EPRI/MRP Proprietary Information.

Table 5-3
Westinghouse plants examination acceptance and expansion criteria (continued)

Content deleted - EPRI/MRP Proprietary Information.

Table 5-3
Westinghouse plants examination acceptance and expansion criteria (continued)

Content deleted - EPRI/MRP Proprietary Information.

Table 5-3
Westinghouse plants examination acceptance and expansion criteria (continued)

Content deleted - EPRI/MRP Proprietary Information.

Table 5-3
Westinghouse plants examination acceptance and expansion criteria (continued)

Content deleted - EPRI/MRP Proprietary Information.

5.1 Examination Acceptance Criteria

5.1.1 Visual (VT-3) Examination

Content deleted - EPRI/MRP Proprietary Information.

Content deleted - EPRI/MRP Proprietary Information.

5.1.2 Visual (VT-1) Examination

Content deleted - EPRI/MRP Proprietary Information.

5.1.3 Enhanced Visual (EVT-1) Examination

Content deleted - EPRI/MRP Proprietary Information.

5.1.4 Surface Examination

Content deleted - EPRI/MRP Proprietary Information.

5.1.5 Volumetric Examination

Content deleted - EPRI/MRP Proprietary Information.

Content deleted - EPRI/MRP Proprietary Information.

Content deleted - EPRI/MRP Proprietary Information.

5.2 Physical Measurements Examination Acceptance Criteria

Content deleted - EPRI/MRP Proprietary Information.

5.3 Expansion Criteria

Content deleted - EPRI/MRP Proprietary Information.

6
EVALUATION METHODOLOGIES

Content deleted - EPRI/MRP Proprietary Information.

Content deleted - EPRI/MRP Proprietary Information.

Content deleted - EPRI/MRP Proprietary Information.

6.1 Loading Conditions

Content deleted - EPRI/MRP Proprietary Information.

Content deleted - EPRI/MRP Proprietary Information.t

Content deleted - EPRI/MRP Proprietary Information.

Content deleted - EPRI/MRP Proprietary Information.

6.2 Evaluation Requirements

Content deleted - EPRI/MRP Proprietary Information.

6.2.1 Limit Load Evaluation

Content deleted - EPRI/MRP Proprietary Information.

Content deleted - EPRI/MRP Proprietary Information.

Content deleted - EPRI/MRP Proprietary Information.

Content deleted - EPRI/MRP Proprietary Information.

6.2.2 Fracture Mechanics Evaluation

Content deleted - EPRI/MRP Proprietary Information.

Content deleted - EPRI/MRP Proprietary Information.

Content deleted - EPRI/MRP Proprietary Information.

Content deleted - EPRI/MRP Proprietary Information.

Content deleted - EPRI/MRP Proprietary Information.

Content deleted - EPRI/MRP Proprietary Information.

Content deleted - EPRI/MRP Proprietary Information.

Figure 6-1
Experimental $J_{material}$ versus crack extension curves for stainless steel materials at various fluence levels [19]

Content deleted - EPRI/MRP Proprietary Information.

Figure 6-2
J-R curve power law parameter C as a function of neutron fluence for stainless steel, applicable for fluence less than $3x10^{21}$ n/cm^2 [19]

Content deleted - EPRI/MRP Proprietary Information.

Figure 6-3
J-R curve power law parameter n as a function of neutron fluence for stainless steel, applicable for fluence less than $3x10^{21}$ n/cm^2 [19]

6.2.3 Flaw Depth Assumptions

IContent deleted - EPRI/MRP Proprietary Information.

6.2.4 Crack Growth Assumptions

Content deleted - EPRI/MRP Proprietary Information.

Content deleted - EPRI/MRP Proprietary Information.

Content deleted - EPRI/MRP Proprietary Information.

Content deleted - EPRI/MRP Proprietary Information.

Figure 6-4
Proposed BWR hydrogen water chemistry crack growth curves for stainless steel irradiated between $5x10^{20}$ to $3x10^{21}$ n/cm^2 [24]

Content deleted - EPRI/MRP Proprietary Information.

Figure 6-5
Effect of stress intensity on IASCC crack growth rate [25]

6.3 Evaluation of Flaws in Bolts and Pins

Content deleted - EPRI/MRP Proprietary Information.

Content deleted - EPRI/MRP Proprietary Information.

6.4 Assembly Level Evaluations

Content deleted - EPRI/MRP Proprietary Information.

Content deleted - EPRI/MRP Proprietary Information.

Content deleted - EPRI/MRP Proprietary Information.

Content deleted - EPRI/MRP Proprietary Information.

6.5 Evaluation of Flaws in Other Internals Structures

Content deleted - EPRI/MRP Proprietary Information.

Content deleted - EPRI/MRP Proprietary Information.

Content deleted - EPRI/MRP Proprietary Information.

Content deleted - EPRI/MRP Proprietary Information.

Content deleted - EPRI/MRP Proprietary Information.

Content deleted - EPRI/MRP Proprietary Information.

7
IMPLEMENTATION REQUIREMENTS

Content deleted - EPRI/MRP Proprietary Information.

7.1 NEI 03-08 Implementation Protocol

Content deleted - EPRI/MRP Proprietary Information.

Content deleted - EPRI/MRP Proprietary Information.

7.2 Aging Management Program Requirement

Content deleted - EPRI/MRP Proprietary Information.

7.3 Reactor Internals Guidelines Implementation Requirement

Content deleted - EPRI/MRP Proprietary Information.

7.4 Examination Procedures Requirement

Content deleted - EPRI/MRP Proprietary Information.

7.5 Examination Results Requirement

Content deleted - EPRI/MRP Proprietary Information.

7.6 Aging Management Program Results Requirement

Content deleted - EPRI/MRP Proprietary Information.

8
REFERENCES

1. Appendix D: Materials Guidelines: Implementation Protocol, in *"Guidelines for the Management of Materials Issues," NEI 03-08, Nuclear Energy Institute, Washington, DC, Latest Edition.*
2. *ASME Boiler & Pressure Vessel Code, Section XI, Division 1, "Rules for Inservice Inspection of Nuclear Power Plant Components,"* American Society of Mechanical Engineers, New York, NY, 2001 Edition, Plus 2003 Addenda, or later.
3. *Materials Reliability Program: Inspection Standard for Reactor Internals (MRP-228).* EPRI, Palo Alto, CA: 2009. 1016609.
4. 10 CFR 50.55a – Codes and Standards, Title 10 (Energy), Part 50 (Domestic Licensing of Production and Utilization Facilities) of the Code of Federal Regulations, U.S. Nuclear Regulatory Commission, Washington, DC, 2005.
5. *Materials Reliability Program: Framework and Strategies for Managing Aging Effects in Reactor Internals (MRP-134).* EPRI, Palo Alto, CA: 2005. 1008203.
6. *Materials Reliability Program: Characterization of Decommissioned PWR Vessel Internals Material Samples – Material Certification, Fluence, and Temperature (MRP-128).* EPRI, Palo Alto, CA: 2003. 1008202.
7. *Materials Reliability Program: PWR Internals Material Aging Degradation Mechanism Screening and Threshold Values (MRP-175).* EPRI, Palo Alto, CA: 2005. 1012081.
8. *Materials Reliability Program: Screening, Categorization, and Ranking of B&W-Designed PWR Internals (MRP-189-Rev. 1).* EPRI, Palo Alto, CA: 2009. 1018292.
9. *Materials Reliability Program: Failure Modes, Effects, and Criticality Analysis of B&W-Designed PWR Internals (MRP-190).* EPRI, Palo Alto, CA: 2006. 1013233.
10. *Materials Reliability Program: Screening, Categorization and Ranking of Reactor Internals of Westinghouse and Combustion Engineering PWR Designs (MRP-191).* EPRI, Palo Alto, CA: 2006. 1013234.
11. *Materials Reliability Program: Functionality Analysis for B&W Representative PWR Internals (MRP-229).* EPRI, Palo Alto, CA: 2008. 1016598.
12. *Materials Reliability Program: Functionality Analysis for Westinghouse and Combustion Engineering Representative PWR Internals (MRP-230).* EPRI, Palo Alto, CA: 2008. 1016597.
13. *Materials Reliability Program: Aging Management Strategies for B&W PWR Internals (MRP-231).* EPRI, Palo Alto, CA: 2008. 1016592.
14. *Materials Reliability Program: Aging Management Strategies for Westinghouse and Combustion Engineering PWR Internals (MRP-232).* EPRI, Palo Alto, CA: 2008. 1016593.

15. Letter to Reactor Internals Focus Group from MRP, Subject: *Minutes of the Expert Panel Meetings on Expansion Criteria for Reactor Internals I&E Guidelines*, MRP 2008-036 (via email), June 12, 2008.

16. *ASME Boiler & Pressure Vessel Code, Section V, Nondestructive Examination*, American Society of Mechanical Engineers, New York, NY, 2004 Edition, July 1, 2004.

17. *Nondestructive Evaluation: Evaluation of Remote Visual Examination Methods*. EPRI, Palo Alto, CA: 2006. 1013537.

18. Topical Report BAW-2248A, "Demonstration of the Management of Aging Effects for the Reactor Vessel Internals," March 2000.

19. *BWRVIP-100-A: BWR Vessel and Internals Project, Updated Assessment of the Fracture Toughness of Irradiated Stainless Steel for BWR Core Shrouds.* EPRI, Palo Alto, CA: 2006. 1013396.

20. *ASME Boiler & Pressure Vessel Code, Section XI, Division 1, Nonmandatory Appendices, Appendix C, "Evaluation of Flaws in Austenitic Piping,"* American Society of Mechanical Engineers, New York, NY, 2004 Edition, July 1, 2004.

21. *ASME Boiler & Pressure Vessel Code, Section III, Division 1, Nonmandatory Appendices, Appendix F, "Rules for Evaluation of Service Loadings With Level D Service Limits,"* American Society of Mechanical Engineers, New York, NY, 2004 Edition, July 1, 2004.

22. *Materials Reliability Program: Fracture Toughness Evaluation of Highly Irradiated PWR Stainless Steel Internal Components (MRP-210)*. EPRI, Palo Alto, CA: 2007. 1016106.

23. *BWR Vessel and Internals Project, Evaluation of Crack Growth in BWR Stainless Steel Reactor Pressure Vessel Internals (BWRVIP-14)*. EPRI TR-105873, EPRI, Palo Alto, CA: 1996.

24. *BWRVIP-99: BWR Vessels and Internals Project, Crack Growth Rates in Irradiated Stainless Steels in BWR Internal Components*. EPRI TR-1003018, EPRI, Palo Alto, CA: 2001.

25. *Materials Reliability Program: PWR Internals Age-Related Material Properties, Degradation Mechanisms, Models, and Basis Data – State of Knowledge (MRP-211)*. EPRI, Palo Alto, CA: 2007. 1015013.

A
AGING MANAGEMENT PROGRAM ATTRIBUTES

A.1 Program Description

Content deleted - EPRI/MRP Proprietary Information.

Content deleted - EPRI/MRP Proprietary Information.i

A.2 Evaluation and Technical Basis

Content deleted - EPRI/MRP Proprietary Information.

Content deleted - EPRI/MRP Proprietary Information.

Content deleted - EPRI/MRP Proprietary Information.

Content deleted - EPRI/MRP Proprietary Information.

Content deleted - EPRI/MRP Proprietary Information.

Content deleted - EPRI/MRP Proprietary Information.

Content deleted - EPRI/MRP Proprietary Information.

Content deleted - EPRI/MRP Proprietary Information.

Content deleted - EPRI/MRP Proprietary Information.

Table A-1
Key elements of PWR internals aging management plan document

Content deleted - EPRI/MRP Proprietary Information.

A.3 References

A1. Generic Aging Lessons Learned (GALL) Report, Volume 2, "Tabulation of Results," (NUREG-1801, Volume 2), Revision 1, U.S. Nuclear Regulatory Commission, Washington, DC: September 2005.

A2. ASME Section XI, *Rules for Inservice Inspection of Nuclear Power Plant Components,* ASME Boiler and Pressure Vessel Code, 2001 Edition, including the 2002 and 2003 Addenda, American Society of Mechanical Engineers, New York, NY.

A3. *Materials Reliability Program: Inspection Standard for Reactor Internals (MRP-228).* EPRI, Palo Alto, CA: 2009. 1016609.

A4. *ASME Boiler & Pressure Vessel Code, Section V, Nondestructive Examination,* American Society of Mechanical Engineers, New York, NY, 2004 Edition, July 1, 2004.

A5. 10 CFR Part 50, Appendix B, *Quality Assurance Criteria for Nuclear Power Plants,* Office of the Federal Register, National Archives and Records Administration, 2005.

Export Control Restrictions

Access to and use of EPRI Intellectual Property is granted with the specific understanding and requirement that responsibility for ensuring full compliance with all applicable U.S. and foreign export laws and regulations is being undertaken by you and your company. This includes an obligation to ensure that any individual receiving access hereunder who is not a U.S. citizen or permanent U.S. resident is permitted access under applicable U.S. and foreign export laws and regulations. In the event you are uncertain whether you or your company may lawfully obtain access to this EPRI Intellectual Property, you acknowledge that it is your obligation to consult with your company's legal counsel to determine whether this access is lawful. Although EPRI may make available on a case-by-case basis an informal assessment of the applicable U.S. export classification for specific EPRI Intellectual Property, you and your company acknowledge that this assessment is solely for informational purposes and not for reliance purposes. You and your company acknowledge that it is still the obligation of you and your company to make your own assessment of the applicable U.S. export classification and ensure compliance accordingly. You and your company understand and acknowledge your obligations to make a prompt report to EPRI and the appropriate authorities regarding any access to or use of EPRI Intellectual Property hereunder that may be in violation of applicable U.S. or foreign export laws or regulations.

The Electric Power Research Institute (EPRI), with major locations in Palo Alto, California; Charlotte, North Carolina; and Knoxville, Tennessee, was established in 1973 as an independent, nonprofit center for public interest energy and environmental research. EPRI brings together members, participants, the Institute's scientists and engineers, and other leading experts to work collaboratively on solutions to the challenges of electric power. These solutions span nearly every area of electricity generation, delivery, and use, including health, safety, and environment. EPRI's members represent over 90% of the electricity generated in the United States. International participation represents nearly 15% of EPRI's total research, development, and demonstration program.

Together...Shaping the Future of Electricity

Program:

Nuclear Power

Printed on recycled paper in the United States of America

1016596

Electric Power Research Institute
3420 Hillview Avenue, Palo Alto, California 94304-1338 • PO Box 10412, Palo Alto, California 94303-0813 USA
800.313.3774 • 650.855.2121 • askepri@epri.com • www.epri.com