HITACHI

GE Hitachi Nuclear Energy

Richard E. Kingston
Vice President, ESBWR Licensing

PO Box 780 M/C A-55
Wilmington, NC 28402-0780
USA

T 910 819 6192
F 910 362 6192
rick.kingston@ge.com

MFN 09-022

Docket No. 52-010

January 13, 2009

U.S. Nuclear Regulatory Commission
Document Control Desk
Washington, D.C. 20555-0001

Subject: Response to Portion of NRC Request for Additional Information Letter Nos. 249 and 268 Related to ESBWR Design Certification Application - Containment Systems - RAI Numbers 3.8-28 S04 and 6.2-200

Enclosure 1 contains the GE Hitachi Nuclear Energy (GEH) responses to the subject NRC supplemental RAI and new RAI transmitted via the Reference 5 and 6 letters, respectively. The original and additional supplemental responses for RAI 3.8-28 were previously submitted by References 1 through 4.

If you have any questions or require additional information, please contact me.

Sincerely,

Richard E. Kingston

Richard E. Kingston
Vice President, ESBWR Licensing

D068
NRO

References:

1. MFN 06-407, Letter from David H. Hinds to U.S. Nuclear Regulatory Commission Document Control Desk, *Response to Portion of NRC Request for Additional Information Letter No. 38 Related to ESBWR Design Certification Application – Structural Analysis - RAI Numbers 3.8-17, 3.8-24, 3.8-28, 3.8-32, 3.8-33 through 3.8-38, 3.8-44, 3.8-59, 3.8-62, 3.8-65, 3.8-69, 3.8-73, 3.8-76, 3.8-77, 3.8-79, 3.8-80, 3.8-81, 3.8-84, 3.8-85, 3.8-86, 3.8-88, 3.8-89, 3.8-92, 3.8-93 through 3.8-97, 3.8-99, 3.8-101, 3.8-102 and 3.8-103*, November 8, 2006
2. MFN 06-407 Supplement 1, Letter from James C. Kinsey to U.S. Nuclear Regulatory Commission Document Control Desk, *Response to Portion of NRC Request for Additional Information Letter No. 38 Related to ESBWR Design Certification Application – Structural Analysis - RAI Numbers 3.8-7 S01, 3.8-24 S01, 3.8-28 S01, 3.8-44 S01, 3.8-59 S01, 3.8-62 S01, 3.8-65 S01, 3.8-69 S01, 3.8-76 S01, 3.8-77 S01, 3.8-79 S01, 3.8-80 S01, 3.8-84 S01, 3.8-95 S01, 3.8-97 S01, 3.8-101 S01, 3.8-102 S01 and 3.8-103 S01 – Supplement 1*, February 1, 2007
3. MFN 06-407 Supplement 3, Letter from James C. Kinsey to U.S. Nuclear Regulatory Commission Document Control Desk, *Response to Portion of NRC Request for Additional Information Letter No. 38 Related to ESBWR Design Certification Application – DCD Tier 2 Section 3.8 – Seismic Category I Structures - RAI Numbers 3.8-28 S02, 3.8-76 S02, 3.8-93 S02, 3.8-94 S02, 3.8-96 S02, 3.8-101 S02, 3.8-102 S02 and 3.8-103 S02*, November 28, 2007
4. MFN 06-407 Supplement 8, Letter from Richard E. Kingston to U.S. Nuclear Regulatory Commission Document Control Desk, *Response to Portion of NRC Request for Additional Information Letter No. 160 Related to ESBWR Design Certification Application - Seismic Category I Structures - RAI Number 3.8-28 S03*, August 8, 2008
5. MFN 08-723, Letter from U.S. Nuclear Regulatory Commission to Robert E. Brown, *Request for Additional Information Letter No. 249 Related to ESBWR Design Certification Application*, September 16, 2008
6. MFN 08-813, Letter from U.S. Nuclear Regulatory Commission to Robert E. Brown, *Request for Additional Information Letter No. 268 Related to ESBWR Design Certification Application*, October 15, 2008

Enclosures:

1. MFN 09-022 - Response to Portion of NRC Request for Additional Information Letter Nos. 249 and 268 Related to ESBWR Design Certification Application - Containment Systems - RAI Numbers 3.8-28 S04 and 6.2-200
2. MFN 09-022 - Response to Portion of NRC Request for Additional Information Letter Nos. 249 and 268 Related to ESBWR Design Certification Application - Containment Systems - RAI Numbers 3.8-28 S04 and 6.2-200 - DCD Markups

cc:	AE Cubbage	USNRC (with enclosures)
	DH Hinds	GEH/Wilmington (with enclosures)
	RE Brown	GEH/Wilmington (with enclosures)
	eDRF	RAI 3.8-28 S04: 0000-0094-6826
		RAI 6.2-200: 0000-0092-4722

Enclosure 1

MFN 09-022

Response to Portion of NRC Request for Additional Information Letter Nos. 249 and 268 Related to ESBWR Design Certification Application

Containment Systems

RAI Numbers 3.8-28 S04 and 6.2-200

NRC RAI 3.8-28 S04:

The response transmitted in GEH letter MFN 06-407, Supplement 8, dated August 8, 2008, addressed some of the items raised previously by this RAI. However, as indicated during the audit at the GEH office during the week of June 23, 2008, ITAAC in Table 2.15.1-2 and the referenced components in Table 2.15.1-1 have been substantially revised. As a result, the information in the new ITAAC and Table 2.15.1-1 is not clear related to containment penetrations. GEH is requested to address the following items:

a) *Table 2.15.1-1 in DCD Tier 1, Rev. 4 identified all of the penetrations of the containment as well as the associated piping and valves. The revised Table 2.15.1-1a of DCD Tier 1, Rev. 5, which is entitled "Containment System Penetrations and Equipment," only identifies valves and piping, not penetrations. GEH is requested to include the designation of containment penetrations as part of this table as implied in the title. Without including this information in Table 2.15.1-1, no ITAAC could be identified that addresses the design, fabrication, erection, and inspection/testing of the penetrations.*

b) *Table 2.15.1-1b, entitled Containment Mechanical Equipment, lists the suppression pool stainless steel liner along with six vacuum breaker valves. GEH is requested to explain why the suppression pool stainless steel liner is considered to be containment mechanical I equipment, rather than part of the reinforced concrete containment vessel (RCCV). If there is some valid reason for doing this, then what about all of the other containment steel liners?*

c) *For the design of the containment and mechanical components, Table 2.15.1-2 identifies ITAAC using "An ASME Code Design Data Report (certified when required by ASME Code)." This should be revised, because for design purposes the ASME requires a certified "Design Report" not a "Design Data Report." A similar table for the PCCS, Table 2.15.4-2, correctly refers to "ASME Code Design Reports." The information presented in the DCD should be consistent for all applicable tables.*

GEH Response:

a) DCD Tier 1, Table 2.15.1-1a (formerly Table 2.15.1-1) will be revised to include all penetrations.

b) DCD Tier 1, Table 2.15.1-1b, item "Suppression Pool Stainless Steel Liner," will be deleted from the table. The reinforced concrete containment vessel (RCCV) and RCCV liners are covered in DCD Tier 1, Table 2.15.1-2, Inspections, Tests, Analyses, and Acceptance Criteria (ITAAC) items 2.a.ii, 2.b.ii, and 2.c.ii.

c) The term "Data" from "Design Data Reports" will be deleted from DCD Tier 1, Table 2.15.1-2, ITAAC items 2.a.i, 2.a.ii, and 2.a.iii.

DCD Impact:

DCD Tier 1, Table 2.15.1-1a, Table 2.15.1-1b, and Table 2.15.1-2, will be revised as noted in the attached markup.

NRC RAI 6.2-200:

1. *In DCD Tier 2, Rev. 5, Tables 6.2-16 to 6.2-40 present containment isolation valve design information. These tables typically refer to other Tier 2 figures for information such as isolation valve(s) and containment penetration. However, many of the referenced figures do not show such information. In tables that refer to other figures for design details, the referenced figures should be updated to show the isolation valve(s) and penetration numbers.*
2. *In Tables 6.2-41, 6.2-43, 6.2-44, and 6.2-45, the entries that typically show design information show "N/A" for Tier 2 figures. As such, there is no design figure (e.g., P&ID, process diagram). These tables need to be revised to include figure(s) showing the isolation valve(s) and penetration numbers.*

GEH Response:

GEH agrees with this RAI. The DCD will be revised to ensure there are figures showing all containment isolation valves, and that all containment isolation valves and penetrations are labeled with their component numbers on the figures. Additional changes will also be made to the DCD to correct information associated with containment isolation valves. Specifically:

- DCD Tier 1, Tables 2.15.1-1a and 2.15.1-1d, will be revised to correct valve names and delete several Containment Monitoring System valves that are no longer part of the ESBWR design.
- DCD Tier 1, Figure 2.15.7-1, will be revised to show the correct number of containment isolation valves and penetrations.
- DCD Tier 2, Tables 6.2-39, 6.2-39a, 6.2-41, 6.2-43 and 6.2-44 will be revised to add references to new figures being added to the DCD.
- DCD Tier 2, Table 6.2-45 will be revised to add a reference to an existing figure in the DCD, and to correct the number of containment penetrations.
- DCD Tier 2, Table 3.9-8 will be revised to delete several Containment Monitoring System valves that are no longer part of the ESBWR design, to add some valves to the table, and to correct some valve numbers and descriptions.
- DCD Tier 2, Figures 5.1-2, 5.1-3, 5.1-4, 7.5-1, 9.1-1, 9.3-1 and 9.3-4 will be revised to show all containment isolation valve and penetration numbers.
- DCD Tier 2, Figures 6.2-31, 6.2-32, 6.2-33, and 6.2-34, will be added.

Note that the response to RAI 6.2-199 (MFN 08-851 dated December 22, 2008) revised DCD Tier 2, Figure 6.2-29 to ensure all valves and penetrations are labeled with the component numbers, and revised DCD Tier 2, Tables 6.2-36 through 6.2-38, to correct the DCD Tier 2 figure numbers.

DCD Impact:

DCD Tier 1, Tables 2.15.1-1a and 2.15.1-1d, and Figure 2.15.7-1, will be revised as noted in the attached markup. DCD Tier 2, Tables 3.9-8, 6.2-39, 6.2-39a, 6.2-41, 6.2-43, 6.2-44, and 6.2-45, and Figures 5.1-2, 5.1-3, 5.1-4, 7.5-1, 9.1-1, 9.3-1 and 9.3-4, will be revised as noted in the attached markup. DCD Tier 2, Figures 6.2-31, 6.2-32, 6.2-33, and 6.2-34, will be added as noted in the attached markup.

Enclosure 2

MFN 09-022

Response to Portion of NRC Request for Additional Information Letter Nos. 249 and 268 Related to ESBWR Design Certification Application

Containment Systems

RAI Numbers 3.8-28 S04 and 6.2-200

DCD Markups

Table 2.15.1-1a

Containment System Penetrations[1] and Equipment

Equipment Name	ASME Code Section III	Seismic Cat. I	Remote Manual Operation	Safety-Related	Containment Isolation Signal	Normal Position	Post-Accident Position	Loss of Motive Power Position
Nuclear Boiler								
Total 4 Penetrations (One penetration per main steam line)								
Inboard main steam isolation valve (MSIV) (4 valves)	Yes	Yes	Yes	Yes	Yes	open	closed	closed
Outboard main steam isolation valve (MSIV) (4 valves)	Yes	Yes	Yes	Yes	Yes	open	closed	closed
Outboard MSIV upstream drain line outboard containment isolation valve (4 valves)	Yes	Yes	Yes	Yes	Yes	open	open/closed	closed
Total 1 Penetration (One penetration per drain line)								
Inboard MSIV upstream drain line inboard containment isolation valve (1 valve)	Yes	Yes	Yes	Yes	Yes	open	closed	closed
Inboard MSIV upstream drain line outboard containment isolation valve (1 valve)	Yes	Yes	Yes	Yes	Yes	open	closed	closed
~~Outboard MSIV upstream drain line outboard containment isolation valve (4 valves)~~	~~Yes~~	~~Yes~~	~~Yes~~	~~Yes~~	~~Yes~~	~~open~~	~~open/closed~~	~~closed~~
Total 2 Penetrations (One penetration per feedwater (FW) supply line)								
FW supply line second outboard containment isolation valve (2 valves)	Yes	Yes	Yes	Yes	Yes	open	closed	closed

Table 2.15.1-1a

Containment System Penetrations[1] and Equipment

Equipment Name	ASME Code Section III	Seismic Cat. I	Remote Manual Operation	Safety-Related	Containment Isolation Signal	Normal Position	Post-Accident Position	Loss of Motive Power Position
FW supply line outboard containment isolation valve (2 valves)	Yes	Yes	Yes	Yes	Yes	open	closed	closed
FW supply line inboard containment isolation valve (2 valves)	Yes	Yes	No	Yes	No	open	open/closed	N/A
RWCU/SDC to Feedwater outboard containment isolation valve (2 valves)	Yes	Yes	No	Yes	No	open	open/closed	open
Isolation Condenser								
Total 4 Penetrations (One shared penetration for each pair consisting of one steam supply line and one purge line)								
Steam supply line isolation valve (4 valves)	Yes	Yes	Yes	Yes	Yes	open	open/closed	as-is
Steam supply line isolation valve (4 valves)	Yes	Yes	Yes	Yes	Yes	open	open/closed	as-is
Condenser purge line isolation valve (4 valves)	Yes	Yes	Yes	Yes	Yes	open	open/closed	closed
Condenser purge line isolation valve (4 valves)	Yes	Yes	No	Yes	No	open	open	N/A
Total 4 Penetrations (One penetration per condensate return line)								
Condensate return line isolation valve (4 valves)	Yes	Yes	Yes	Yes	Yes	open	open/closed	as-is
Condensate return line isolation valve (4 valves)	Yes	Yes	Yes	Yes	Yes	open	open/closed	as-is
Total 4 Penetrations (One shared penetration for each pair consisting of one condenser upper header vent line and one condenser lower header vent line)								

Table 2.15.1-1a

Containment System Penetrations[1] and Equipment

Equipment Name	ASME Code Section III	Seismic Cat. I	Remote Manual Operation	Safety-Related	Containment Isolation Signal	Normal Position	Post-Accident Position	Loss of Motive Power Position
Condenser upper header vent valve (4 valves)	Yes	Yes	Yes	Yes	No	closed	closed	closed
Condenser upper header vent valve (4 valves)	Yes	Yes	Yes	Yes	No	closed	closed	closed
Condenser lower header vent valve (4 valves)	Yes	Yes	Yes	Yes	No	closed	closed	closed
Condenser lower header vent valve (4 valves)	Yes	Yes	Yes	Yes	No	closed	closed	closed
Bypass lower header vent valve (4 valves)	Yes	Yes	No	Yes	No	closed	open/closed	N/A
Bypass lower header vent valve (4 valves)	Yes	Yes	Yes	Yes	No	closed	open/closed	open
~~Condenser purge line isolation valve (4 valves)~~Deleted	~~Yes~~	~~Yes~~	~~Yes~~	~~Yes~~	~~Yes~~	~~open~~	~~open/closed~~	~~closed~~
~~Condenser purge line isolation valve (4 valves)~~Deleted	~~Yes~~	~~Yes~~	~~No~~	~~Yes~~	~~No~~	~~open~~	~~open~~	~~N/A~~
Standby Liquid Control								
Total 2 Penetrations (One penetration per SLC injection line)								
SLC injection line squib valve (4 valves)	Yes	Yes	No	Yes	No	closed	open	as-is
SLC injection line outboard check valve (2 valves)	Yes	Yes	No	Yes	No	closed	open/closed	N/A

Table 2.15.1-1a

Containment System Penetrations[1] and Equipment

Equipment Name	ASME Code Section III	Seismic Cat. I	Remote Manual Operation	Safety-Related	Containment Isolation Signal	Normal Position	Post-Accident Position	Loss of Motive Power Position
SLC injection line inboard check valve (2 valves)	Yes	Yes	No	Yes	No	closed	open/closed	N/A
Process Radiation Monitoring								
Total 2 Penetrations (One penetration per DW Fission Product Monitoring Line)								
DW Fission Product Monitoring Line Inboard isolation Valve (1 valve)	Yes	Yes	Yes	Yes	Yes	open	open	as-is
DW Fission Product Monitoring Line Outboard isolation Valve (1 valve)	Yes	Yes	Yes	Yes	Yes	open	open	as-is
DW Fission Product Monitoring Line Inboard isolation Valve (1 valve)	Yes	Yes	Yes	Yes	Yes	open	open	as-is
DW Fission Product Monitoring Line Outboard isolation Valve (1 valve)	Yes	Yes	Yes	Yes	Yes	open	open	as-is
Fuel and Auxiliary Pools Cooling								
Total 1 Penetration (One penetration per reactor well drain line)								
Reactor well drain line containment isolation valve (1 valve)	Yes	Yes	No	Yes	No	closed	closed	N/A
Reactor well drain line containment isolation valve (1 valve)	Yes	Yes	No	Yes	No	closed	closed	N/A
Total 1 Penetration (One penetration per GDCS pool return line)								
GDCS pool return line outboard isolation valve (1 valve)	Yes	Yes	Yes	Yes	Yes	closed	closed	closed

Table 2.15.1-1a

Containment System Penetrations[1] and Equipment

Equipment Name	ASME Code Section III	Seismic Cat. I	Remote Manual Operation	Safety-Related	Containment Isolation Signal	Normal Position	Post-Accident Position	Loss of Motive Power Position
GDCS pool return line inboard isolation check valve (1 valve)	Yes	Yes	No	Yes	No	closed	closed	N/A
Total 2 Penetrations (Two penetrations per one suppression pool return line)								
Suppression pool return line outboard isolation valve (2 valves)	Yes	Yes	Yes	Yes	No	closed	closed	as-is
Suppression pool return line inboard isolation check valve (2 valves)	Yes	Yes	No	Yes	No	closed	closed	N/A
Total 1 Penetration (One penetration per DW spray line)								
DW spray line outboard isolation valve (1 valve)	Yes	Yes	Yes	Yes	No	closed	closed	closed
DW spray line inboard isolation check valve (1 valve)	Yes	Yes	No	Yes	No	closed	closed	N/A
Total 2 Penetrations (2 penetrations per one suppression pool suction line)								
Suppression pool suction line outboard isolation valve (2 valves)	Yes	Yes	Yes	Yes	No	closed	closed	as-is
Suppression pool suction line outboard isolation valve (2 valves)	Yes	Yes	Yes	Yes	No	closed	closed	as-is
Total 1 Penetration (One penetration per GDCS pool suction line)								
GDCS pool suction line inboard isolation valve (1 valve)	Yes	Yes	Yes	Yes	Yes	closed	closed	closed
GDCS pool suction line outboard isolation valve (1 valve)	Yes	Yes	Yes	Yes	Yes	closed	closed	closed

Table 2.15.1-1a

Containment System Penetrations[1] and Equipment

Equipment Name	ASME Code Section III	Seismic Cat. I	Remote Manual Operation	Safety-Related	Containment Isolation Signal	Normal Position	Post-Accident Position	Loss of Motive Power Position
Reactor Water Cleanup/Shutdown Cooling								
Total 2 Penetrations (One penetration per RWCU/SDC mid-vessel suction line)								
RWCU/SDC mid-vessel suction line inboard isolation valve (2 valves)	Yes	Yes	Yes	Yes	Yes	open	closed	closed
RWCU/SDC mid-vessel suction line outboard isolation valve (2 valves)	Yes	Yes	Yes	Yes	Yes	open	closed	closed
Total 2 Penetrations (One penetration per RWCU/SDC bottom head suction line)								
RWCU/SDC bottom head suction line inboard isolation valve (2 valves)	Yes	Yes	Yes	Yes	Yes	open	closed	closed
RWCU/SDC bottom head suction line outboard isolation valve (2 valves)	Yes	Yes	Yes	Yes	Yes	open	closed	closed
Total 2 Penetrations (One penetration per RWCU/SDC bottom head suction sample line)								
RWCU/SDC bottom head suction line sample line inboard isolation valve (2 valves)	Yes	Yes	Yes	Yes	Yes	closed	open/closed	closed
RWCU/SDC bottom head suction line sample line outboard isolation valve (2 valves)	Yes	Yes	Yes	Yes	Yes	closed	open/closed	closed
Chilled Water								
Total 2 penetration (One penetration per Chilled water supply line to DW cooler)								
Chilled water supply line to DW cooler outboard isolation valve (2	Yes	Yes	Yes	Yes	Yes	open	closed	closed

Table 2.15.1-1a

Containment System Penetrations[1] and Equipment

Equipment Name	ASME Code Section III	Seismic Cat. I	Remote Manual Operation	Safety-Related	Containment Isolation Signal	Normal Position	Post-Accident Position	Loss of Motive Power Position
valves)								
Chilled water supply line to DW cooler inboard isolation valve (2 valves)	Yes	Yes	Yes	Yes	Yes	open	closed	closed
Total 2 penetration (One penetration per Chilled water return line from DW cooler)								
Chilled water return line from DW cooler inboard isolation valve (2 valves)	Yes	Yes	Yes	Yes	Yes	open	closed	closed
Chilled water return line from DW cooler outboard isolation valve (2 valves)	Yes	Yes	Yes	Yes	Yes	open	closed	closed
Makeup Water								
Total 1 Penetration (One penetration per makeup water line)								
Demin water DW distribution system outboard containment isolation valve (1 valve)	Yes	Yes	No	Yes	No	closed	closed	N/A
Demin water DW distribution system inboard containment isolation valve (1 valve)	Yes	Yes	No	Yes	No	closed	closed	N/A
Service Air								
Total 1 Penetration (One penetration per service air line)								
Service air system inboard containment isolation valve (1 valve)	Yes	Yes	No	Yes	No	closed	closed	N/A

Table 2.15.1-1a

Containment System Penetrations[1] and Equipment

Equipment Name	ASME Code Section III	Seismic Cat. I	Remote Manual Operation	Safety-Related	Containment Isolation Signal	Normal Position	Post-Accident Position	Loss of Motive Power Position
Service air system outboard containment isolation valve (1 valve)	Yes	Yes	No	Yes	No	closed	closed	N/A
High Pressure Nitrogen Gas Supply								
Total 1 Penetration (One penetration per N2 supply line to ADS, SRV, and ICIV accumulator)								
N2 supply line outboard isolation valve to ADS, SRV and ICIV accumulator (1 valve)	Yes	Yes	Yes	Yes	Yes	open	closed	closed
N2 supply line inboard isolation check valve to ADS, SRV and ICIV accumulator (1 valve)	Yes	Yes	No	Yes	No	open/closed	closed	N/A
Total 1 Penetration (One penetration per N2 supply line to MSIV and other users)								
N2 supply line outboard isolation valve to MSIV and other uses (1 valve)	Yes	Yes	Yes	Yes	Yes	open	closed	closed
N2 supply line inboard check valve to MSIV and other uses (1 valve)	Yes	Yes	No	Yes	No	open/closed	closed	N/A
Containment Inerting								
Total 2 Penetrations (Two penetrations per Air/N2 supply line)								
Air/N2 supply line to suppression pool outboard isolation valve (1 valve)	Yes	Yes	Yes	Yes	Yes	closed	closed	closed
Air/N2 supply line to outboard isolation valve (1 valve)	Yes	Yes	Yes	Yes	Yes	closed	closed	closed

Table 2.15.1-1a

Containment System Penetrations[1] and Equipment

Equipment Name	ASME Code Section III	Seismic Cat. I	Remote Manual Operation	Safety-Related	Containment Isolation Signal	Normal Position	Post-Accident Position	Loss of Motive Power Position
Air/N2 supply line to upper DW outboard isolation valve (1 valve)	Yes	Yes	Yes	Yes	Yes	closed	closed	closed
N2 makeup line outboard isolation valve (1 valve)	Yes	Yes	Yes	Yes	Yes	open	closed	closed
N2 makeup line to suppression pool outboard isolation valve (1 valve)	Yes	Yes	Yes	Yes	Yes	open	closed	closed
N2 makeup line to upper DW outboard isolation valve (1 valve)	Yes	Yes	Yes	Yes	Yes	open	closed	closed
Total 2 Penetrations (Two penetrations per exhaust line)								
Lower DW exhaust line outboard isolation valve (1 valve)	Yes	Yes	Yes	Yes	Yes	closed	closed	closed
Containment atmospheric exhaust line outboard isolation valve (1 valve)	Yes	Yes	Yes	Yes	Yes	closed	closed	closed
Suppression pool exhaust line outboard isolation valve (1 valve)	Yes	Yes	Yes	Yes	Yes	closed	closed	closed
Suppression pool exhaust line to Stack outboard isolation valve (1 valve)	Yes	Yes	Yes	Yes	Yes	closed	closed	closed
Containment atmospheric bleed line outboard isolation valve (1 valve)	Yes	Yes	Yes	Yes	Yes	closed	closed	closed
Containment atmospheric bleed line outboard isolation valve (1 valve)	Yes	Yes	Yes	Yes	Yes	closed	closed	closed
Suppression pool exhaust line to Stack outboard isolation valve (1 valve)	Yes	Yes	Yes	Yes	Yes	closed	closed	closed

Table 2.15.1-1a

Containment System Penetrations[1] and Equipment

Equipment Name	ASME Code Section III	Seismic Cat. I	Remote Manual Operation	Safety-Related	Containment Isolation Signal	Normal Position	Post-Accident Position	Loss of Motive Power Position
~~N2 makeup line outboard isolation valve (1 valve)~~Deleted	~~Yes~~	~~Yes~~	~~Yes~~	~~Yes~~	~~Yes~~	~~open~~	~~closed~~	~~closed~~
~~N2 makeup line to suppression pool outboard isolation valve (1 valve)~~Deleted	~~Yes~~	~~Yes~~	~~Yes~~	~~Yes~~	~~Yes~~	~~open~~	~~closed~~	~~closed~~
~~N2 makeup line to upper DW outboard isolation valve (1 valve)~~Deleted	~~Yes~~	~~Yes~~	~~Yes~~	~~Yes~~	~~Yes~~	~~open~~	~~closed~~	~~closed~~
Containment Monitoring								
Total 2 Penetrations (One penetration per DW sample line)								
DW to Sample Rack (2 valves)	Yes	Yes	Yes	Yes	Yes	open	open	open
DW to Sample Rack (2 valves)	Yes	Yes	Yes	Yes	Yes	open	open	open
Total 2 Penetrations (One penetration per WW sample line)								
~~Gas Sample Return to Containment~~WW to Sample Rack (2 valves)	Yes	Yes	Yes	Yes	Yes	open	open	open
~~Gas Sample Return to WW~~WW to Sample Rack (2 valves)	Yes	Yes	Yes	Yes	Yes	open	open	open
Total 2 Penetrations (One penetration per WW gas sample return line)								
Gas Sample Return to ~~DW~~ WW (2 valves)	Yes	Yes	Yes	Yes	Yes	open	open	open
Gas Sample Return to WW (2 valves)	Yes	Yes	Yes	Yes	Yes	open	open	open

Table 2.15.1-1a

Containment System Penetrations[1] and Equipment

Equipment Name	ASME Code Section III	Seismic Cat. I	Remote Manual Operation	Safety-Related	Containment Isolation Signal	Normal Position	Post-Accident Position	Loss of Motive Power Position
~~Gas Sample Return to DW (2 valves)~~	~~Yes~~	~~Yes~~	~~Yes~~	~~Yes~~	~~Yes~~	~~open~~	~~open~~	~~open~~
~~Gas Sample Return from Containment to Sample (2 valves)~~	~~Yes~~	~~Yes~~	~~Yes~~	~~Yes~~	~~Yes~~	~~open~~	~~open~~	~~open~~
~~Isolation to Skid for CAM Sample (2 valves)~~	~~Yes~~	~~Yes~~	~~Yes~~	~~Yes~~	~~Yes~~	~~open~~	~~open~~	~~open~~
~~Isolation for Gas Sample Return to Containment (1 valve)~~	~~Yes~~	~~Yes~~	~~Yes~~	~~Yes~~	~~Yes~~	~~open~~	~~open~~	~~open~~
~~Isolation for Gas Sample Return to Containment (1 valve)~~	~~Yes~~	~~Yes~~	~~Yes~~	~~Yes~~	~~Yes~~	~~open~~	~~open~~	~~open~~
~~RCCW Supply to CMS Skid (1 valve)~~	~~Yes~~	~~Yes~~	~~Yes~~	~~Yes~~	~~Yes~~	~~open~~	~~open~~	~~open~~
~~RCCW Supply to CMS Skid (1 valve)~~	~~Yes~~	~~Yes~~	~~Yes~~	~~Yes~~	~~Yes~~	~~open~~	~~open~~	~~open~~
~~RCCW Return from CMS Skid (1 valve)~~	~~Yes~~	~~Yes~~	~~Yes~~	~~Yes~~	~~Yes~~	~~open~~	~~open~~	~~open~~
~~RCCW Return from CMS Skid (1 valve)~~	~~Yes~~	~~Yes~~	~~Yes~~	~~Yes~~	~~Yes~~	~~open~~	~~open~~	~~open~~
~~Liquid Sample Return to Suppression Pool (1 valve)~~	~~Yes~~	~~Yes~~	~~Yes~~	~~Yes~~	~~Yes~~	~~open~~	~~open~~	~~open~~
Equipment and Floor Drain								
Total 1 Penetrations (One penetration per DW equipment drain Low Conductivity Waste (LCW) sump discharge line)								
DW equipment drain ~~(~~LCW~~)~~ sump discharge line inboard isolation valve (1 valve)	Yes	Yes	Yes	Yes	Yes	closed	closed	closed

Table 2.15.1-1a

Containment System Penetrations[1] and Equipment

Equipment Name	ASME Code Section III	Seismic Cat. I	Remote Manual Operation	Safety-Related	Containment Isolation Signal	Normal Position	Post-Accident Position	Loss of Motive Power Position
DW equipment drain ~~(~~LCW~~)~~ sump discharge line outboard isolation valve (1 valve)	Yes	Yes	Yes	Yes	Yes	closed	closed	closed
Total 1 Penetrations (One penetration per DW equipment drain High Conductivity Waste (HCW) sump discharge line)								
DW floor drain ~~(~~HCW~~)~~ sump discharge line inboard isolation valve (1 valve)	Yes	Yes	Yes	Yes	Yes	closed	closed	closed
DW floor drain ~~(~~HCW~~)~~ sump discharge line outboard isolation valve (1 valve)	Yes	Yes	Yes	Yes	Yes	closed	closed	closed

[1] Includes associated piping between containment isolation valves.

Table 2.15.1-1b

Containment Mechanical Equipment

Equipment Name (Description)	Equipment Identifier See Figure 2.15.1-1	ASME Code Section III	Seismic Cat. I	RCPB Component	Containment Isolation Valve	Remotely Operated	Loss of Motive Power Position	MCR Alarms
Vacuum Breaker	11(A)	Yes	Yes	No	No	-	-	Yes
Vacuum Breaker Isolation Valve	11.a(A)	Yes	Yes	No	No	Yes	As-is	Yes
Vacuum Breaker	11(B)	Yes	Yes	No	No	-	-	Yes
Vacuum Breaker Isolation Valve	11.a(B)	Yes	Yes	No	No	Yes	As-is	Yes
Vacuum Breaker	11(C)	Yes	Yes	No	No	-	-	Yes
Vacuum Breaker Isolation Valve	11.a(C)	Yes	Yes	No	No	Yes	As-is	Yes
~~Suppression Pool Stainless Steel Liner~~Deleted	~~N/A~~	~~Yes~~	~~Yes~~	~~No~~	~~No~~	~~No~~	-	-

Note: A dash means not applicable.

Table 2.15.1-1d

Containment System Penetration Isolation Valve Closure Times

Equipment Name	Closure Time (sec)[1]
~~Gas Sample Return to Containment~~WW to Sample Rack (2 valves)	N/A
~~Gas Sample Return to WW~~WW to Sample Rack (2 valves)	N/A
~~Gas Sample Return to DW~~Gas Sample Return to WW (2 valves)	N/A
Gas Sample Return to WW (2 valves)	N/A
~~Gas Sample Return to DW (2 valves)~~Deleted	~~N/A~~
~~Gas Sample Return from Containment to Sample (2 valves)~~Deleted	~~N/A~~
~~Isolation to Skid for CAM Sample (2 valves)~~Deleted	~~N/A~~
~~Isolation for Gas Sample Return to Containment (1 valve)~~Deleted	~~N/A~~
~~Isolation for Gas Sample Return to Containment (1 valve)~~Deleted	~~N/A~~
~~RCCW Supply to CMS Skid (1 valve)~~Deleted	~~N/A~~
~~RCCW Supply to CMS Skid (1 valve)~~Deleted	~~N/A~~
~~RCCW Return from CMS Skid (1 valve)~~Deleted	~~N/A~~
~~RCCW Return from CMS Skid (1 valve)~~Deleted	~~N/A~~
~~Liquid Sample Return to Suppression Pool (1 valve)~~Deleted	~~N/A~~
Equipment and Floor Drain	
DW equipment drain (LCW) sump discharge line inboard isolation valve (1 valve)	N/A
DW equipment drain (LCW) sump discharge line outboard isolation valve (1 valve)	N/A
DW floor drain (HCW) sump discharge line inboard isolation valve (1 valve)	N/A
DW floor drain (HCW) sump discharge line outboard isolation valve (1 valve)	N/A

[1] This table is used for Acceptance Criteria only

Table 2.15.1-2

ITAAC For The Containment System

Design Commitment	Inspections, Tests, Analyses	Acceptance Criteria
1. The functional arrangement of the Containment System is as described in the Design Description of this Subsection 2.15.1 and as shown in Figure 2.15.1-1.	Inspections of the as-built system will be conducted.	Inspection report(s) ~~document~~ exist and conclude that the as-built Containment System conforms to the functional arrangement as described in Subsection 2.15.1 and Figure 2.15.1-1. For components and piping identified in Table 2.15.1-1a as ASME Code Section III, this report is an ASME Code report.
2.a1~~.i~~.The components identified in Table 2.15.1-1 as ASME Code Section III are designed in accordance with ASME Code Section III requirements and seismic Category I requirements.	Inspection of ASME Code Design Reports (NCA 3550) and required documents will be conducted.	~~An~~ ASME Code Design ~~Data~~ Report(s) (certified, when required by ASME Code) exist~~s~~ for the components identified in Table 2.15.1-1 as ASME Code Section III and ~~demonstrates~~ conclude compliance to NCA-3550, including for those stresses and loads related to fatigue (including environmental effects), thermal expansion, seismic, and combined.

Table 2.15.1-2

ITAAC For The Containment System

Design Commitment	Inspections, Tests, Analyses	Acceptance Criteria
2.a2~~.ii~~.The RCCV and its liners are designed to meet the requirements in Article CC-3000 of ASME Code, Section III, Division 2, and seismic Category I requirements. The steel components of the RCCV are designed to meet the requirements in Article NE-3000 of ASME Code, Section III, Division 1, and seismic Category I requirements.	Inspection of ASME Code Design ~~Data~~ Report and certified documents for the RCCV and its liners, and for the steel components of the RCCV will be conducted.	~~An~~ ASME Code Design ~~Data~~ Report(s) (certified, when required by ASME Code) exist~~s~~ for the RCCV and its liners and steel components in accordance with ASME Code Section III, including for those stresses and loads related to fatigue (including environmental effects), thermal expansion, seismic, and combined.
2.a3~~.iii~~.The piping identified in Table 2.15.1-1 as ASME Code Section III is designed in accordance with ASME Code Section III requirements and seismic Category I requirements.	Inspection of ASME Code Design Reports (NCA 3550) and required documents for the piping will be conducted. {{Design Acceptance Criteria}}	~~An~~ ASME Code Design ~~Data~~ Report(s) (certified, when required by ASME Code) exist~~s~~ for the piping identified in Table 2.15.1-1 as ASME Code Section III and demonstrates compliance to NCA-3550, including for those stresses and loads related to fatigue (including environmental effects), thermal expansion, seismic, and combined. {{Design Acceptance Criteria}}

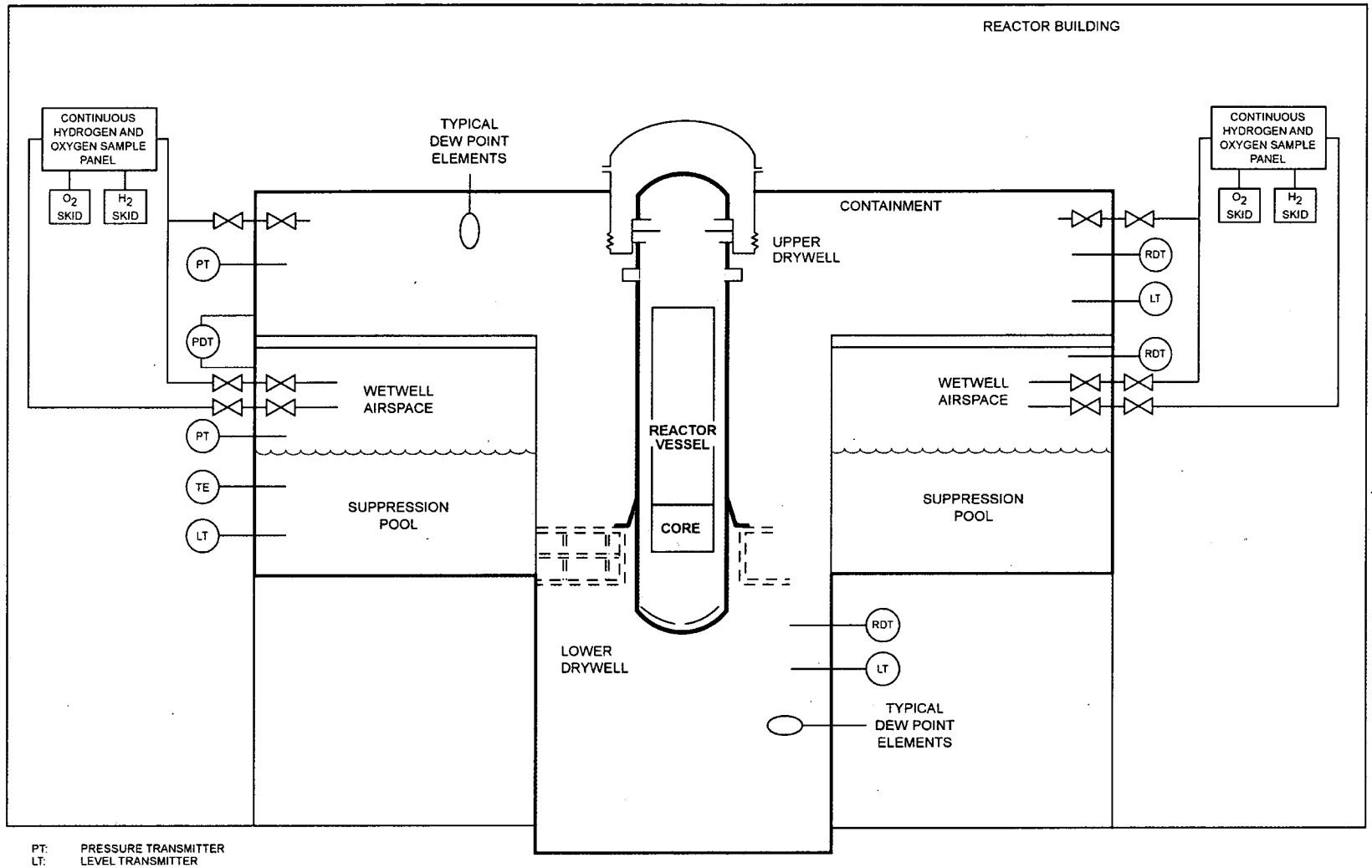

PT: PRESSURE TRANSMITTER
LT: LEVEL TRANSMITTER
PDT: PRESSURE DIFFERENTIAL TRANSMITTER
RDT: RADIATION DETECTION TRANSMITTER
TE: TEMPERATURE ELEMENT

NOTE:
ONLY ONE APPLICABLE SENSOR IS SHOWN
IN THIS SKETCH TO SHOW THEIR TYPICAL LOCATION.

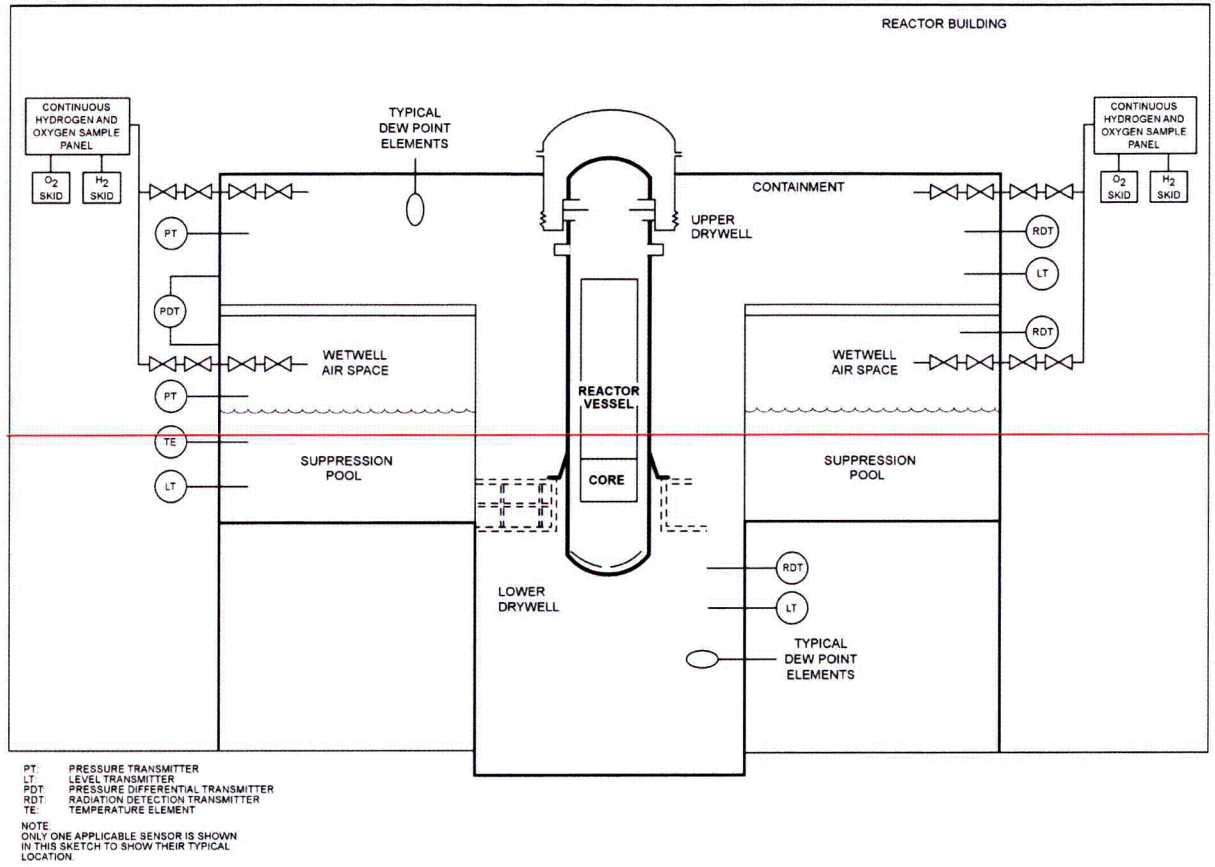

PT: PRESSURE TRANSMITTER
LT: LEVEL TRANSMITTER
PDT: PRESSURE DIFFERENTIAL TRANSMITTER
RDT: RADIATION DETECTION TRANSMITTER
TE: TEMPERATURE ELEMENT

NOTE:
ONLY ONE APPLICABLE SENSOR IS SHOWN IN THIS SKETCH TO SHOW THEIR TYPICAL LOCATION.

Figure 2.15.7-1. Containment Monitoring System Functional Arrangement

Table 3.9-8

Inservice Testing

No.	Qty	Description (g)	Valve Type (i)	Act (b)	Code Class (a)	Code Cat. (c)	Valve Func. (d)	Norm Pos	Safety Pos.	Fail Safe Pos	C I V	Test Para (e)	Test Freq. (f)
F002	1	Drywell Fission Product Monitoring Line Outboard isolation Valve	GB	SO	2	A	A	O	O	as-is	Y	SO P L	3 mo 2 yrs App J
F003	1	Drywell Fission Product Monitoring Line Inboard isolation Valve	GB	SO	2	A	A	O	O	as-is	Y	SO P L	3 mo 2 yrs App J
F004	1	Drywell Fission Product Monitoring Line Outboard isolation Valve	GB	SO	2	A	A	O	O	as-is	Y	SO P L	3 mo 2 yrs App J
T62 Containment Monitoring System Valves													
(Deleted) ~~F007B/C~~	~~2~~	~~Gas Sample Return to Drywell~~	~~GB~~ ~~QT~~	~~SO~~ ~~AO~~	~~2~~	~~A~~	~~A~~	~~O~~	~~O~~	~~O~~	~~Y~~	~~SO~~ ~~FO~~ ~~L~~	~~3 mo~~ ~~3 mo~~ ~~App J~~
(Deleted) ~~F010B/C~~	~~2~~	~~Gas Sample Return to Drywell~~	~~GB~~ ~~QT~~	~~SO~~ ~~AO~~	~~2~~	~~A~~	~~A~~	~~O~~	~~O~~	~~O~~	~~Y~~	~~SO~~ ~~FO~~ ~~L~~	~~3 mo~~ ~~3 mo~~ ~~App J~~

Table 3.9-8

Inservice Testing

No.	Qty	Description (g)	Valve Type (i)	Act (b)	Code Class (a)	Code Cat. (c)	Valve Func. (d)	Norm Pos	Safety Pos.	Fail Safe Pos	C I V	Test Para (e)	Test Freq. (f)
F00~~2~~1B/C	2	Drywell to Sample Rack Inboard	GB QT	SO AO	2	A	A	O	O	O	Y	SO FO P L	3 mo 3 mo 2 yrs App J
F004~~2~~B/C	2	Drywell to Sample Rack Outboard	GB QT	SO AO	2	A	A	O	O	O	Y	SO FO P L	3 mo 3 mo 2 yrs App J
(Deleted) ~~F005B/C~~	~~2~~	~~Gas Sample Return to Containment~~	~~GB~~ ~~QT~~	~~SO~~ ~~AO~~	~~2~~	~~A~~	~~A~~	~~O~~	~~O~~	~~O~~	~~Y~~	~~SO~~ ~~FO~~ ~~P~~ ~~L~~	~~3 mo~~ ~~3 mo~~ ~~2 yrs~~ ~~App J~~
F006B/C	2	Gas Sample Return to Wetwell Inboard	GB QT	SO AO	2	A	A	O	O	O	Y	SO FO P L	3 mo 3 mo 2 yrs App J
F00~~5~~9B/C	2	Gas Sample Return to Wetwell Outboard	GB QT	SO AO	2	A	A	O	O	O	Y	SO FO P L	3 mo 3 mo 2 yrs App J

Table 3.9-8

Inservice Testing

No.	Qty	Description (g)	Valve Type (i)	Act (b)	Code Class (a)	Code Cat. (c)	Valve Func. (d)	Norm Pos	Safety Pos.	Fail Safe Pos	C I V	Test Para (e)	Test Freq. (f)
F0~~1~~03~~A~~ B/~~B~~C	2	~~Gas Sample Return from Containment~~Wetwell to Sample Rack Inboard	GB QT	SO AO	2	A	A	O	O	O	Y	SO FO P L	3 mo 3 mo 2 yrs App J
F0~~1~~04~~A~~ B/~~B~~C	2	~~Isolation to Skid for CAM~~Wetwell to Sample Rack Outboard	GB QT	SO AO	2	A	A	O	O	O	Y	SO FO P L	3 mo 3 mo 2 yrs App J
(Deleted) ~~F015~~	~~1~~	~~Isolation for Gas Sample Return to Containment~~	~~GB~~ ~~QT~~	~~SO~~ ~~AO~~	~~2~~	~~A~~	~~A~~	~~O~~	~~O~~	~~O~~	~~Y~~	~~SO~~ ~~FO~~ ~~P~~ ~~L~~	~~3 mo~~ ~~3 mo~~ ~~2 yrs~~ ~~App J~~
(Deleted) ~~F016~~	~~1~~	~~Isolation for Gas Sample Return to Containment~~	~~GB~~ ~~QT~~	~~SO~~ ~~AO~~	~~2~~	~~A~~	~~A~~	~~O~~	~~O~~	~~O~~	~~Y~~	~~SO~~ ~~FO~~ ~~P~~ ~~L~~	~~3 mo~~ ~~3 mo~~ ~~2 yrs~~ ~~App J~~
(Deleted) ~~F021~~	~~1~~	~~RCCW Supply to CMS Skid~~	~~GB~~ ~~QT~~	~~SO~~ ~~AO~~	~~2~~	~~A~~	~~A~~	~~O~~	~~O~~	~~O~~	~~Y~~	~~SO~~ ~~FO~~ ~~P~~ ~~L~~	~~3 mo~~ ~~3 mo~~ ~~2 yrs~~ ~~App J~~

Table 3.9-8

Inservice Testing

No.	Qty	Description (g)	Valve Type (i)	Act (b)	Code Class (a)	Code Cat. (c)	Valve Func. (d)	Norm Pos	Safety Pos.	Fail Safe Pos	C I V	Test Para (e)	Test Freq. (f)
(Deleted) ~~F022~~	~~1~~	~~RCCW Supply to CMS Skid~~	~~GB~~ ~~QT~~	~~SO~~ ~~AO~~	~~2~~	~~A~~	~~A~~	~~O~~	~~O~~	~~O~~	~~Y~~	~~SO~~ ~~FO~~ ~~P~~ ~~L~~	~~3 mo~~ ~~3 mo~~ ~~2 yrs~~ ~~App J~~
(Deleted) ~~F023~~	~~1~~	~~RCCW Return from CMS Skid~~	~~GB~~ ~~QT~~	~~SO~~ ~~AO~~	~~2~~	~~A~~	~~A~~	~~O~~	~~O~~	~~O~~	~~Y~~	~~SO~~ ~~FO~~ ~~P~~ ~~L~~	~~3 mo~~ ~~3 mo~~ ~~2 yrs~~ ~~App J~~
(Deleted) ~~F024~~	~~1~~	~~RCCW Return from CMS Skid~~	~~GB~~ ~~QT~~	~~SO~~ ~~AO~~	~~2~~	~~A~~	~~A~~	~~O~~	~~O~~	~~O~~	~~Y~~	~~SO~~ ~~FO~~ ~~P~~ ~~L~~	~~3 mo~~ ~~3 mo~~ ~~2 yrs~~ ~~App J~~
(Deleted) ~~F025~~	~~1~~	~~Liquid Sample Return to Suppression Pool~~	~~GB~~ ~~QT~~	~~SO~~ ~~AO~~	~~2~~	~~A~~	~~A~~	~~O~~	~~O~~	~~O~~	~~Y~~	~~SO~~ ~~FO~~ ~~P~~ ~~L~~	~~3 mo~~ ~~3 mo~~ ~~2 yrs~~ ~~App J~~
F701A/B /C/D	4	Suppression Pool Level Narrow Range	GB QT	SO AO	2	A	A	O	O	O	Y	SO FO P L	3 mo 3 mo 2 yrs App J

Table 3.9-8
Inservice Testing

No.	Qty	Description (g)	Valve Type (i)	Act (b)	Code Class (a)	Code Cat. (c)	Valve Func. (d)	Norm Pos	Safety Pos.	Fail Safe Pos	C I V	Test Para (e)	Test Freq. (f)
F703 A/B/C/D	4	Suppression Pool Level Narrow Range	GB QT	SO AO	2	A	A	O	O	O	Y	SO FO P L	3 mo 3 mo 2 yrs App J
F705B/C	2	Suppression Pool Level Wide Range	GB QT	SO AO	2	A	A	O	O	O	Y	SO FO P L	3 mo 3 mo 2 yrs App J
F707B/C	2	Suppression Pool Level Wide Range	GB QT	SO AO	2	A	A	O	O	O	Y	SO FO P L	3 mo 3 mo 2 yrs App J
F709~~A~~B/ ~~B~~C	2	Suppression Pool Level Wide Range~~Drywell Level Isolation~~	GB QT	SO AO	2	A	A	O	O	O	Y	SO FO P L	3 mo 3 mo 2 yrs App J
F711B~~A~~/ ~~B~~C	2	Suppression Pool Level Wide Range~~Drywell Level Isolation~~	GB QT	SO AO	2	A	A	O	O	O	Y	SO FO P L	3 mo 3 mo 2 yrs App J

Table 3.9-8

Inservice Testing

No.	Qty	Description (g)	Valve Type (i)	Act (b)	Code Class (a)	Code Cat. (c)	Valve Func. (d)	Norm Pos	Safety Pos.	Fail Safe Pos	C I V	Test Para (e)	Test Freq. (f)
F713B~~A~~/ ~~B~~C	2	Lower Drywell/~~Wetwell~~ Level ~~Isolation~~PAM	GB QT	SO AO	2	A	A	O	O	O	Y	SO FO P L	3 mo 3 mo 2 yrs App J
F715B/C	~~1~~2	Lower Drywell Level ~~Isolation~~PAM	GB QT	SO AO	2	A	A	O	O	O	Y	SO FO P L	3 mo 3 mo 2 yrs App J
F717 A/B/C/D	~~2~~4	Lower Drywell Level Isolation	GB QT	SO AO	2	A	A	O	O	O	Y	SO FO P L	3 mo 3 mo 2 yrs App J
F719 A/B/C/D	4	Lower Drywell Level Isolation	GB QT	SO AO	2	A	A	O	O	O	Y	SO FO P L	3 mo 3 mo 2 yrs App J
F721A/B	2	Drywell Upper Level Isolation	GB QT	SO AO	2	A	A	O	O	O	Y	SO FO P L	3 mo 3 mo 2 yrs App J

Table 3.9-8

Inservice Testing

No.	Qty	Description (g)	Valve Type (i)	Act (b)	Code Class (a)	Code Cat. (c)	Valve Func. (d)	Norm Pos	Safety Pos.	Fail Safe Pos	C I V	Test Para (e)	Test Freq. (f)
F723A/B	2	Drywell Upper Level Isolation	GB QT	SO AO	2	A	A	O	O	O	Y	SO FO P L	3 mo 3 mo 2 yrs App J
F72~~3~~5A/B	2~~1~~	~~Containment Flood Level Wide Range~~Drywell/Wetwell Delta Pressure	GB QT	SO AO	2	A	A	O	O	O	Y	SO FO P L	3 mo 3 mo 2 yrs App J
F72~~3~~7A/B	2~~1~~	Drywell/Wetwell Delta Pressure~~Containment Flood Level Wide Range~~	GB QT	SO AO	2	A	A	O	O	O	Y	SO FO P L	3 mo 3 mo 2 yrs App J
F7~~65~~29A/B~~C~~	2~~1~~	Drywell Pressure PAM~~Suppression Pool Level Wide Range~~	GB QT	SO AO	2	A	A	O	O	O	Y	SO FO P L	3 mo 3 mo 2 yrs App J
F7~~67~~31 A/B/C/D	~~1~~4	~~Suppression Pool Level Wide~~Drywell Pressure Narrow Range	GB QT	SO AO	2	A	A	O	O	O	Y	SO FO P L	3 mo 3 mo 2 yrs App J

Table 3.9-8

Inservice Testing

No.	Qty	Description (g)	Valve Type (i)	Act (b)	Code Class (a)	Code Cat. (c)	Valve Func. (d)	Norm Pos	Safety Pos.	Fail Safe Pos	C I V	Test Para (e)	Test Freq. (f)
F733 A/B/C/D	4	Drywell Pressure Wide Range	GB QT	SO AO	2	A	A	O	O	O	Y	SO FO P L	3 mo 3 mo 2 yrs App J
F735A/B	2	Wetwell Pressure	GB QT	SO AO	2	A	A	O	O	O	Y	SO FO P L	3 mo 3 mo 2 yrs App J
E50 Gravity-Driven Cooling System Valves													
F001	8	GDCS injection line manual shutoff valve	GT QBL	M	1	B	P	O	O	N/A	--	P	2 yrs
F002	8	GDCS injection squib actuated valve	SQ	EX	1	D	A	C	O	as-is	--	X P	E2 2 yrs
F003	8	GDCS check valve (g8)	CK	SA	1	A, C	A	O	O/C	N/A	--	L SC SO P	RO RO RO 2 yrs
F004	4	GDCS manual shutoff valve	GT QBL	M	3	B	P	O	O	N/A	--	P	2 yrs

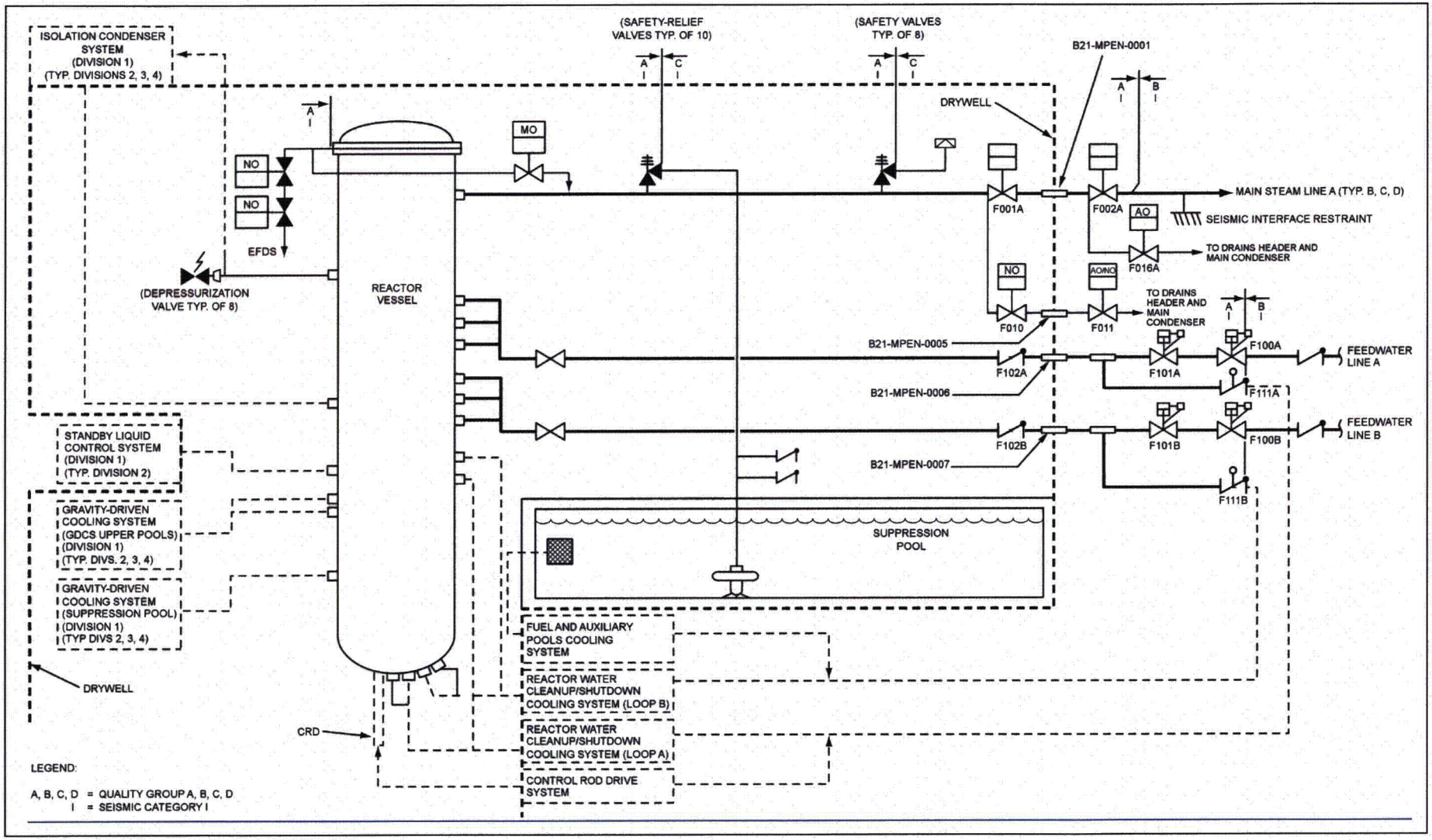
ISOLATION CONDENSER SYSTEM (DIVISION 1) (TYP. DIVISIONS 2, 3, 4)
(SAFETY-RELIEF VALVES TYP. OF 10)
(SAFETY VALVES TYP. OF 8)
B21-MPEN-0001
DRYWELL
MO
NO
NO
EFDS
(DEPRESSURIZATION VALVE TYP. OF 8)
REACTOR VESSEL
F001A
F002A
AO
MAIN STEAM LINE A (TYP. B, C, D)
SEISMIC INTERFACE RESTRAINT
TO DRAINS HEADER AND MAIN CONDENSER
F016A
NO
AO/NO
F010
F011
TO DRAINS HEADER AND MAIN CONDENSER
B21-MPEN-0005
F102A
F101A
F100A
FEEDWATER LINE A
F111A
B21-MPEN-0006
F102B
F101B
F100B
FEEDWATER LINE B
B21-MPEN-0007
F111B
STANDBY LIQUID CONTROL SYSTEM (DIVISION 1) (TYP. DIVISION 2)
GRAVITY-DRIVEN COOLING SYSTEM (GDCS UPPER POOLS) (DIVISION 1) (TYP. DIVS. 2, 3, 4)
GRAVITY-DRIVEN COOLING SYSTEM (SUPPRESSION POOL) (DIVISION 1) (TYP DIVS 2, 3, 4)
SUPPRESSION POOL
FUEL AND AUXILIARY POOLS COOLING SYSTEM
REACTOR WATER CLEANUP/SHUTDOWN COOLING SYSTEM (LOOP B)
REACTOR WATER CLEANUP/SHUTDOWN COOLING SYSTEM (LOOP A)
CONTROL ROD DRIVE SYSTEM
DRYWELL
CRD
LEGEND:
A, B, C, D = QUALITY GROUP A, B, C, D
I = SEISMIC CATEGORY I

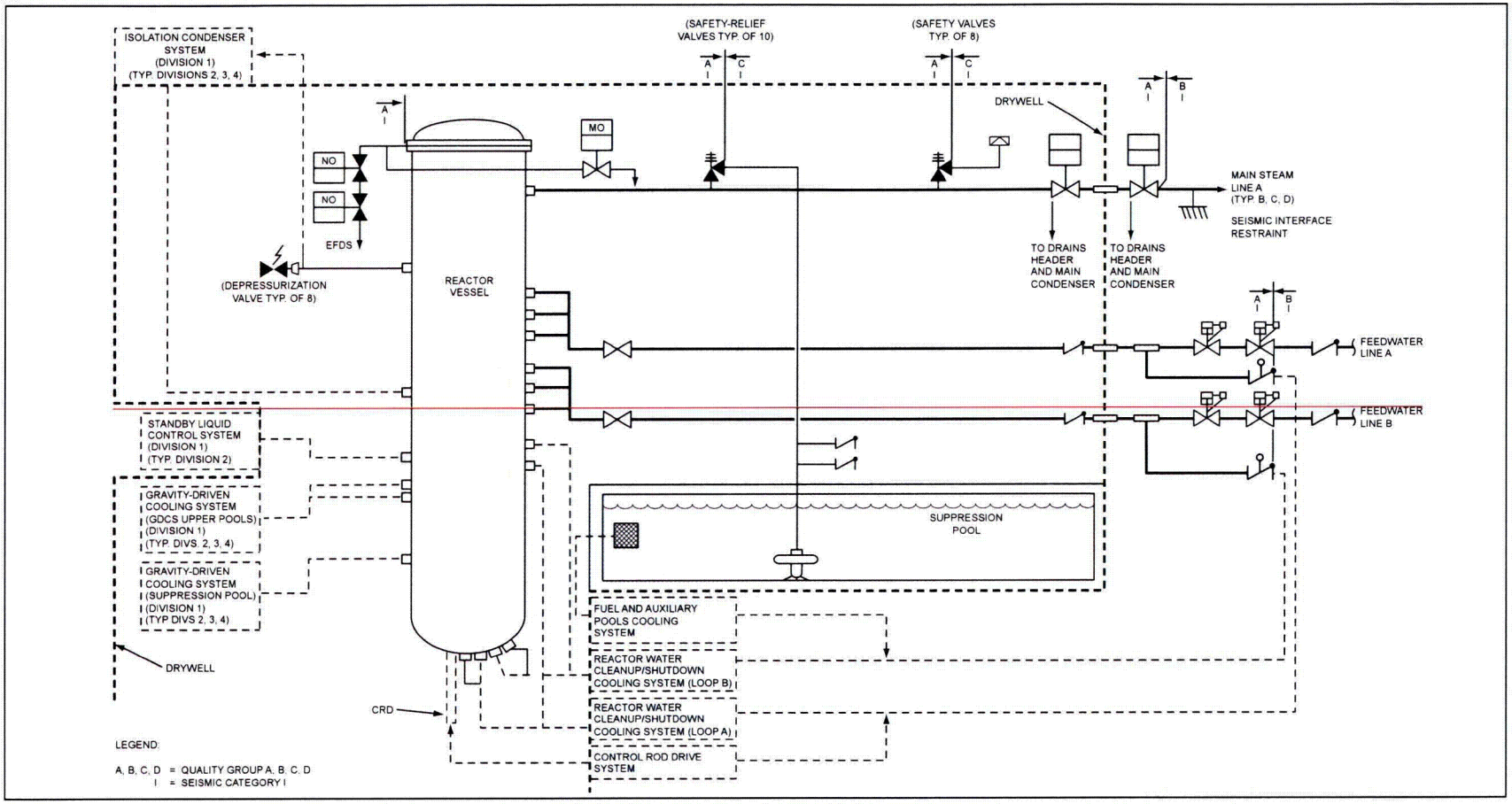

Figure 5.1-2. Nuclear Boiler System Schematic

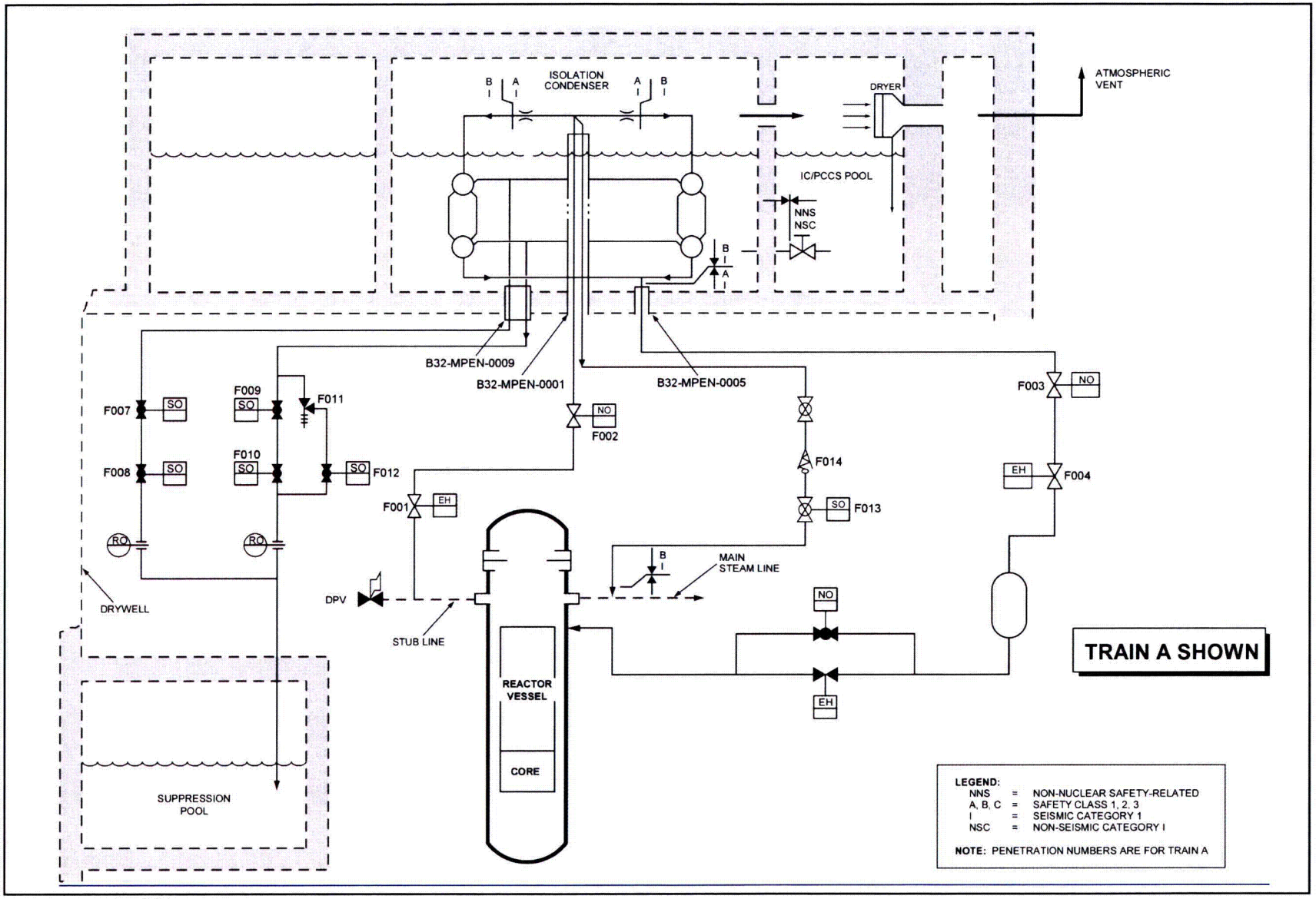
ISOLATION CONDENSER
B
A
A
B
DRYER
ATMOSPHERIC VENT
IC/PCCS POOL
NNS
NSC
B32-MPEN-0009
B32-MPEN-0001
B32-MPEN-0005
F007
SO
F008
SO
F009
SO
F010
SO
F011
F012
SO
F002
NO
F001
EH
F014
F013
SO
F003
NO
F004
EH
RO
RO
DRYWELL
DPV
STUB LINE
MAIN STEAM LINE
REACTOR VESSEL
CORE
NO
EH
SUPPRESSION POOL
TRAIN A SHOWN
LEGEND:
NNS = NON-NUCLEAR SAFETY-RELATED
A, B, C = SAFETY CLASS 1, 2, 3
I = SEISMIC CATEGORY 1
NSC = NON-SEISMIC CATEGORY I
NOTE: PENETRATION NUMBERS ARE FOR TRAIN A

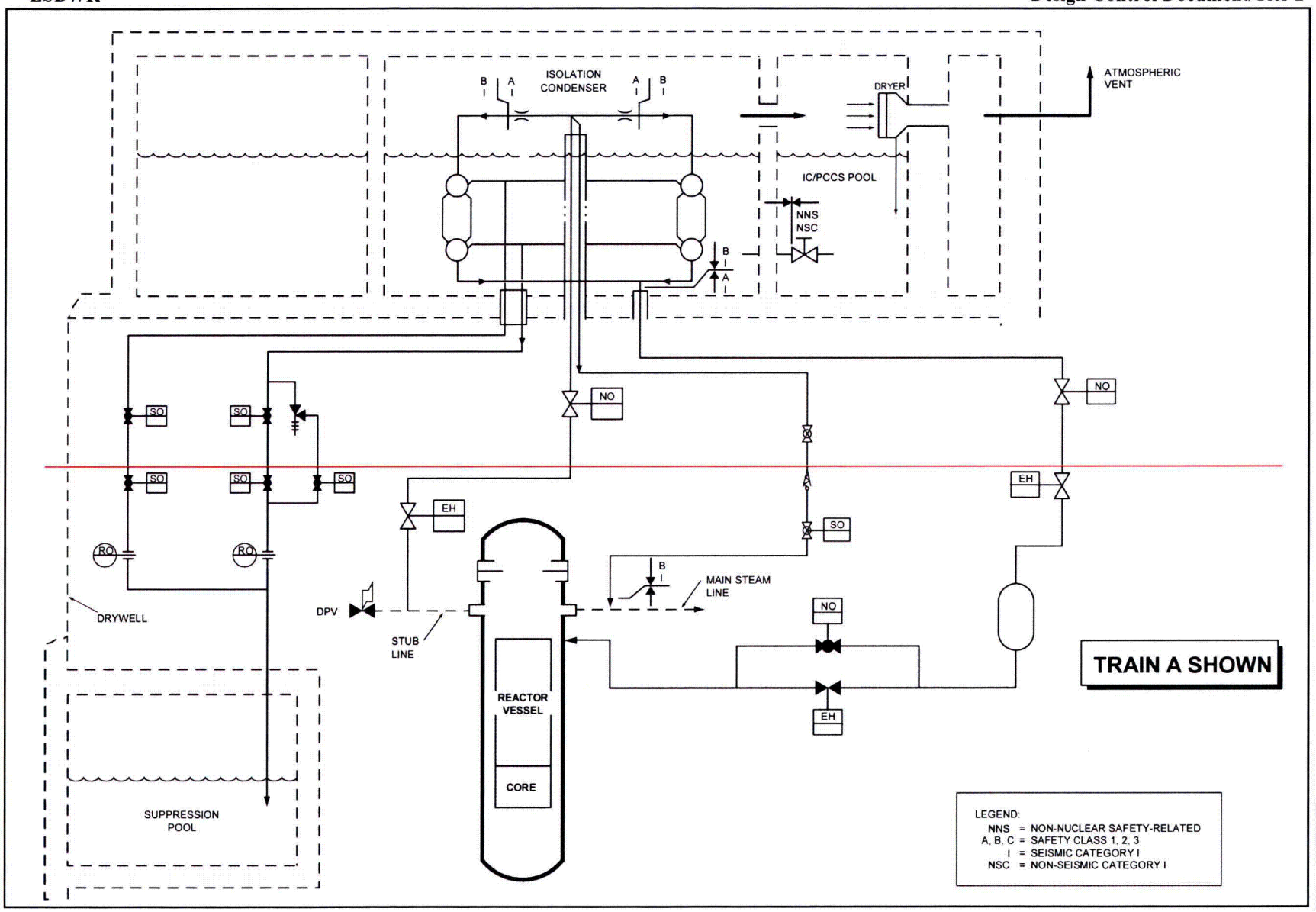

Figure 5.1-3. Isolation Condenser System Schematic

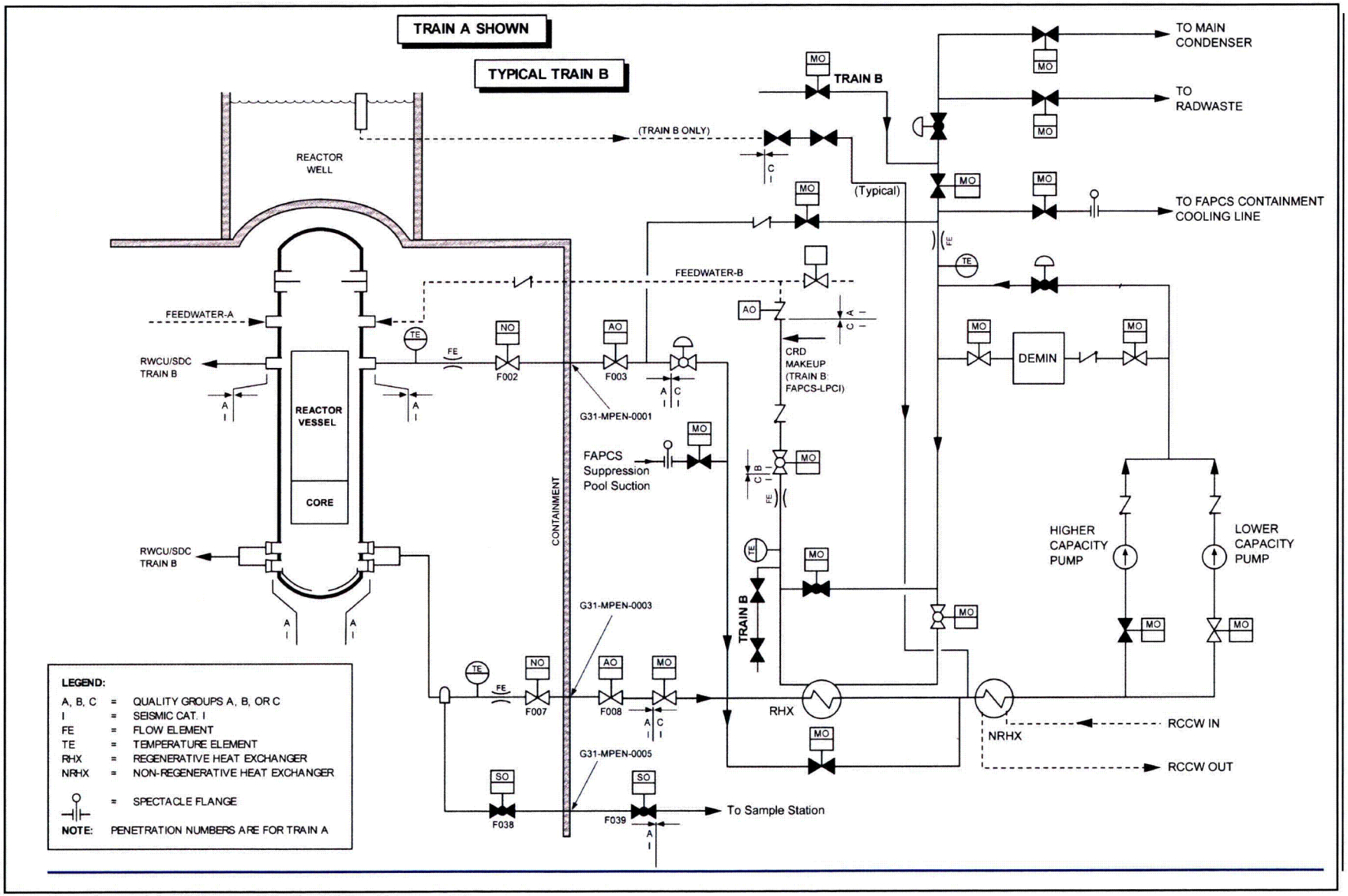
TRAIN A SHOWN
TYPICAL TRAIN B
TRAIN B
(TRAIN B ONLY)
(Typical)
TO MAIN CONDENSER
TO RADWASTE
TO FAPCS CONTAINMENT COOLING LINE
REACTOR WELL
FEEDWATER-A
FEEDWATER-B
RWCU/SDC TRAIN B
REACTOR VESSEL
CORE
CONTAINMENT
F002
F003
F007
F008
F038
F039
G31-MPEN-0001
G31-MPEN-0003
G31-MPEN-0005
CRD MAKEUP (TRAIN B: FAPCS-LPCI)
FAPCS Suppression Pool Suction
DEMIN
HIGHER CAPACITY PUMP
LOWER CAPACITY PUMP
RHX
NRHX
RCCW IN
RCCW OUT
To Sample Station
LEGEND:
A, B, C = QUALITY GROUPS A, B, OR C
I = SEISMIC CAT. I
FE = FLOW ELEMENT
TE = TEMPERATURE ELEMENT
RHX = REGENERATIVE HEAT EXCHANGER
NRHX = NON-REGENERATIVE HEAT EXCHANGER
= SPECTACLE FLANGE
NOTE: PENETRATION NUMBERS ARE FOR TRAIN A

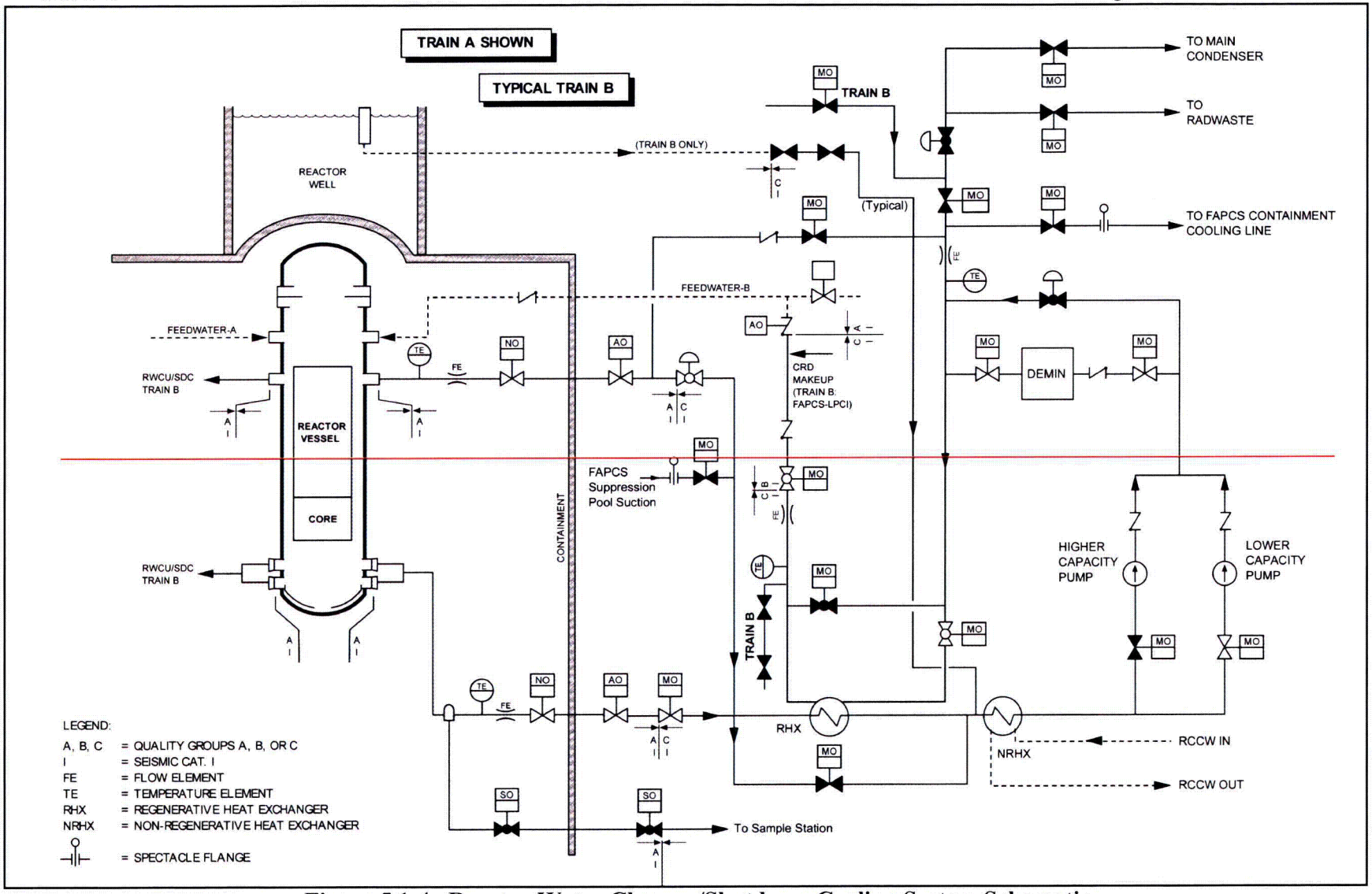

Figure 5.1-4. Reactor Water Cleanup/Shutdown Cooling System Schematic

Table 6.2-39

Containment Isolation Valve Information for the Chilled Water System Train A

Penetration Identification	P25-MPEN-0001		P25-MPEN-0002	
Valve No.	F023A	F024A	F025A	F026A
Applicable Basis	GDC 56	GDC 56	GDC 56	GDC 56
Tier 2 Figure	~~96~~.2-34	~~96~~.2-34	~~96~~.2-34	~~96~~.2-34
ESF	No	No	No	No
Fluid	Water	Water	Water	Water
Line Size+	150 mm (6 in)	150 mm (6 in)	150 mm (6 in)	150 mm (6 in)
Type C Leakage Test	Yes	Yes	Yes	Yes
(Deleted)~~Pipe Length from Cont. to Inboard/Outboard Isolation Valve~~	~~COL Holder to provide~~	~~COL Holder to provide~~	~~COL Holder to provide~~	~~COL Holder to provide~~
Leakage Through Packing[a]	a_1	N/A	N/A	a_1
Leakage Past Seat[b]	b_2	b_2	b_2	b_2
Location	Outboard	Inboard	Inboard	Outboard
Valve Type	QBL, GT	GB, QBL, AF	GB, QBL, AF	QBL, GT
Operator[c]	SO	NO	NO	SO
Normal Position	Open	Open	Open	Open
Shutdown Position	Open/Closed	Open/Closed	Open/Closed	Open/Closed
Post-Acc Position	Closed	Closed	Closed	Closed
Power Fail Position	Closed	Closed	Closed	Closed
Cont. Iso. Signal[d]	C,H	C,H	C,H	C,H
Primary Actuation	Automatic	Automatic	Automatic	Automatic
Secondary Actuation	Remote manual	Remote manual	Remote manual	Remote manual
Closure Time (sec.)	< 30	< 30	< 30	< 30
Power Source	Div. 2, 4	Div. 1, 3	Div. 1, 3	Div. 2, 4

+ Nominal pipe size diameter
Note: For explanation of codes, see legend on Table 6.2-15.

Table 6.2-39a

Containment Isolation Valve Information for the Chilled Water System Train B

Penetration Identification	P25-MPEN-0003		P25-MPEN-0004	
Valve No.	F023B	F024B	F025B	F026B
Applicable Basis	GDC 56	GDC 56	GDC 56	GDC 56
Tier 2 Figure	~~96~~.2-34	~~96~~.2-34	~~96~~.2-34	~~96~~.2-34
ESF	No	No	No	No
Fluid	Water	Water	Water	Water
Line Size+	150 mm (6 in)	150 mm (6 in)	150 mm (6 in)	150 mm (6 in)
Type C Leakage Test	Yes	Yes	Yes	Yes
(Deleted)~~Pipe Length from Cont. to Inboard/Outboard Isolation Valve~~	~~COL Holder to provide~~	~~COL Holder to provide~~	~~COL Holder to provide~~	~~COL Holder to provide~~
Leakage Through Packing[a]	a_1	N/A	N/A	a_1
Leakage Past Seat[b]	b_2	b_2	b_2	b_2
Location	Outboard	Inboard	Inboard	Outboard
Valve Type	QBL, GT	QBL, GT	GB, QBL, AF	QBL, GT
Operator[c]	SO	NO	NO	SO
Normal Position	Open	Open	Open	Open
Shutdown Position	Open/Closed	Open/Closed	Open/Closed	Open/Closed
Post-Acc Position	Closed	Closed	Closed	Closed
Power Fail Position	Closed	Closed	Closed	Closed
Cont. Iso. Signal[d]	C,H	C,H	C,H	C,H
Primary Actuation	Automatic	Automatic	Automatic	Automatic
Secondary Actuation	Remote manual	Remote manual	Remote manual	Remote manual
Closure Time (sec.)	< 30	< 30	< 30	< 30
Power Source	Div. 2, 4	Div. 1, 3	Div. 1, 3	Div. 2, 4

+ Nominal pipe size diameter

Note: For explanation of codes, see legend on Table 6.2-15.

Table 6.2-41

Containment Isolation Valve Information for the Makeup Water System

Penetration Identification	P10-MPEN-0001	
Valve No.	**F016**	**F015**
Applicable Basis	GDC 56	GDC 56
Tier 2 Figure	~~N/A~~6.2-31	~~N/A~~6.2-31
ESF	No	No
Fluid	Water	Water
Line Size+	< 50 mm (2 in)	< 50 mm (2 in)
Type C Leakage Test	Yes	Yes
(Deleted)~~Pipe Length from Cont. to Inboard/Outboard Isolation Valve~~	~~COL Holder to provide~~	~~COL Holder to provide~~
Leakage Through Packing[(a)]	N/A	a_1
Leakage Past Seat[(b)]	b_6	b_6
Location	Inboard	Outboard
Valve Type	CK	GT, QBL
Operator[(c)]	SA	M
Normal Position	Closed	Closed
Shutdown Position	Closed	Closed
Post-Acc Position	Closed	Closed
Power Fail Position	N/A	N/A
Cont. Iso. Signal[(d)]	Q	R
Primary Actuation	Flow	Local manual
Secondary Actuation	N/A	N/A
Closure Time (sec.)	N/A	N/A
Power Source	N/A	N/A

+ Nominal pipe size diameter

Table 6.2-43

Containment Isolation Valve Information for the Equipment and Floor Drain System

Penetration Identification	U50-MPEN-0001		U50-MPEN-0002	
Valve No.	**F001**	**F002**	**F003**	**F004**
Applicable Basis	GDC 56	GDC 56	GDC 56	GDC 56
Tier 2 Figure	~~N/A~~6.2-32	6.2-32~~N/A~~	6.2-32~~N/A~~	6.2-32~~N/A~~
ESF	No	No	No	No
Fluid	Water	Water	Water	Water
Line Size+	< 50 mm (2 in)	< 50 mm (2 in)	< 50 mm(2 in)	< 50 mm (2 in)
Type C Leakage Test	Yes	Yes	Yes	Yes
(Deleted)~~Pipe Length from Cont. to Inboard/Outboard Isolation Valve~~	~~COL Holder to provide~~	~~COL Holder to provide~~	~~COL Holder to provide~~	~~COL Holder to provide~~
Leakage Through Packing[(a)]	N/A	a_1	N/A	a_1
Leakage Past Seat[(b)]	b_7	b_7	b_7	b_7
Location	Inboard	Outboard	Inboard	Outboard
Valve Type	QBL, GB, AF	QBL, GT	QBL, GB, AF	QBL, GT
Operator[(c)]	NO	AO	NO	AO
Normal Position	Closed	Closed	Closed	Closed
Shutdown Position	Closed	Closed	Closed	Closed
Post-Acc Position	Closed	Closed	Closed	Closed
Power Fail Position	Closed	Closed	Closed	Closed
Cont. Iso. Signal[(d)]	B, C, H	B, C, H	B, C, H	B, C, H
Primary Actuation	Automatic	Automatic	Automatic	Automatic
Secondary Actuation	Remote manual	Remote manual	Remote manual	Remote manual
Closure Time (sec.)	N/A	N/A	N/A	N/A
Power Source	Div. 2, 4	Div. 1, 3	Div. 2, 4	Div. 1, 3

+ Nominal pipe size diameter

Table 6.2-44

Containment Isolation Valve Information for the Service Air System

Penetration Identification	P51-MPEN-0001	
Valve No.	**F001**	**F002**
Applicable Basis	GDC 56	GDC 56
Tier 2 Figure	~~N/A~~6.2-33	~~N/A~~6.2-33
ESF	No	No
Fluid	Air	Air
Line Size+	< 50 mm (2 in)	< 50 mm (2 in)
Type C Leakage Test	Yes	Yes
(Deleted)~~Pipe Length from Cont. to Inboard/Outboard Isolation Valve~~	~~COL Holder to provide~~	~~COL Holder to provide~~
Leakage Through Packing[a]	a_1	N/A
Leakage Past Seat[b]	b_6	b_6
Location	Outboard	Inboard
Valve Type	QBL, GB	QBL, GB
Operator[c]	M	M
Normal Position	Closed	Closed
Shutdown Position	Open	Open
Post-Acc Position	Closed	Closed
Power Fail Position	N/A	N/A
Cont. Iso. Signal[d]	R	R
Primary Actuation	Local manual	Local manual
Secondary Actuation	N/A	N/A
Closure Time (sec.)	N/A	N/A
Power Source	N/A	N/A

+ Nominal pipe size diameter

Table 6.2-45

Containment Isolation Valve Information for the Containment Monitoring System

Penetration Identification	T62-MPEN-0001 through 00086	
Valve No.	**Various**	**Various**
Applicable Basis	GDC 56	GDC 56
Tier 2 Figure	7.5-1~~N/A~~	~~N/A~~7.5-1
ESF	No	No
Fluid	Air/N_2	Air/N_2
Line Size+	< 50 mm (2 in)	< 50 mm (2 in)
Type C Leakage Test	Yes	Yes
(Deleted)~~Pipe Length from Cont. to Inboard/Outboard Isolation Valve~~	~~COL Holder to provide~~	~~COL Holder to provide~~
Leakage Through Packing[(a)]	a_1	N/A
Leakage Past Seat[(b)]	b_2	b_2
Location	Outboard	Inboard
Valve Type	GB, QT	GB, QT
Operator[(c)]	SO, AO	SO, AO
Normal Position	Open	Open
Shutdown Position	Open	Open
Post-Acc Position	Open	Open
Power Fail Position	Open	Open
Cont. Iso. Signal[(d)]	B, C, H	B, C, H
Primary Actuation	Automatic	Automatic
Secondary Actuation	Remote manual	Remote manual
Closure Time (sec.)	N/A	N/A
Power Source	Div. 2, 4	Div. 1, 3

+ Nominal pipe size diameter

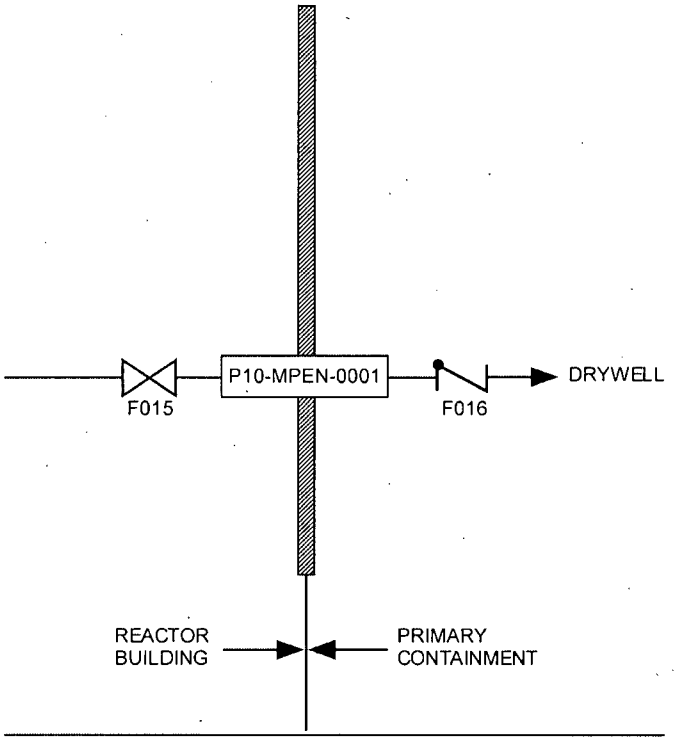

Figure 6.2-31. Containment Isolation Valves for Makeup Water System

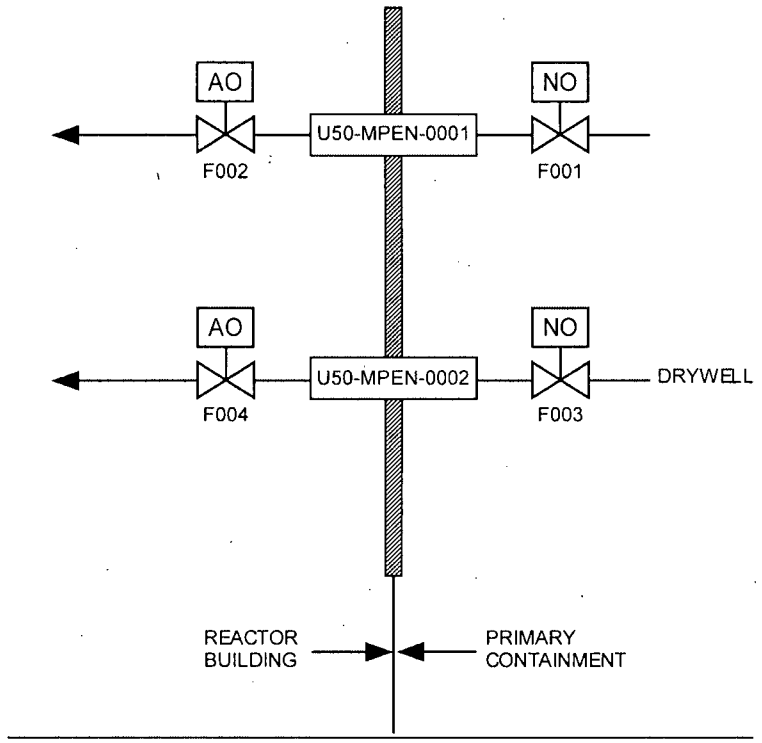

Figure 6.2-32. Containment Isolation Valves for Equipment and Floor Drain System

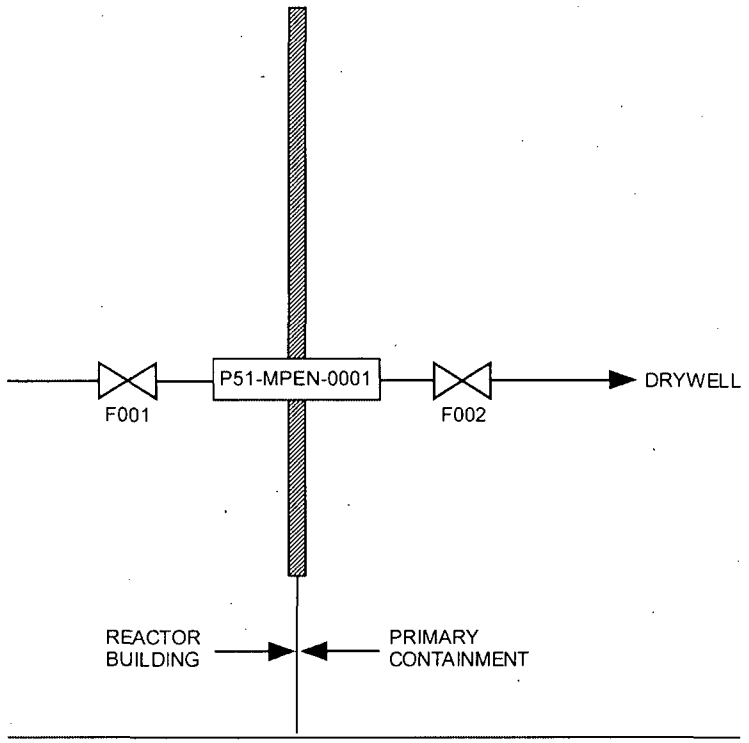

Figure 6.2-33. Containment Isolation Valves for Service Air System

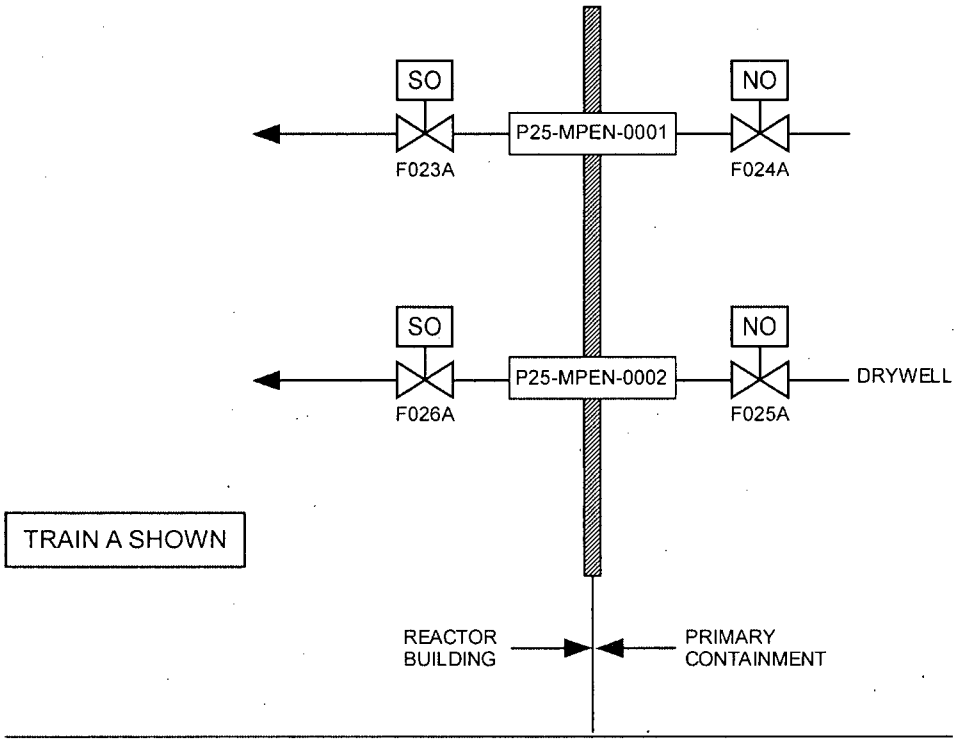

Figure 6.2-34. Containment Isolation Valves for Chilled Water System

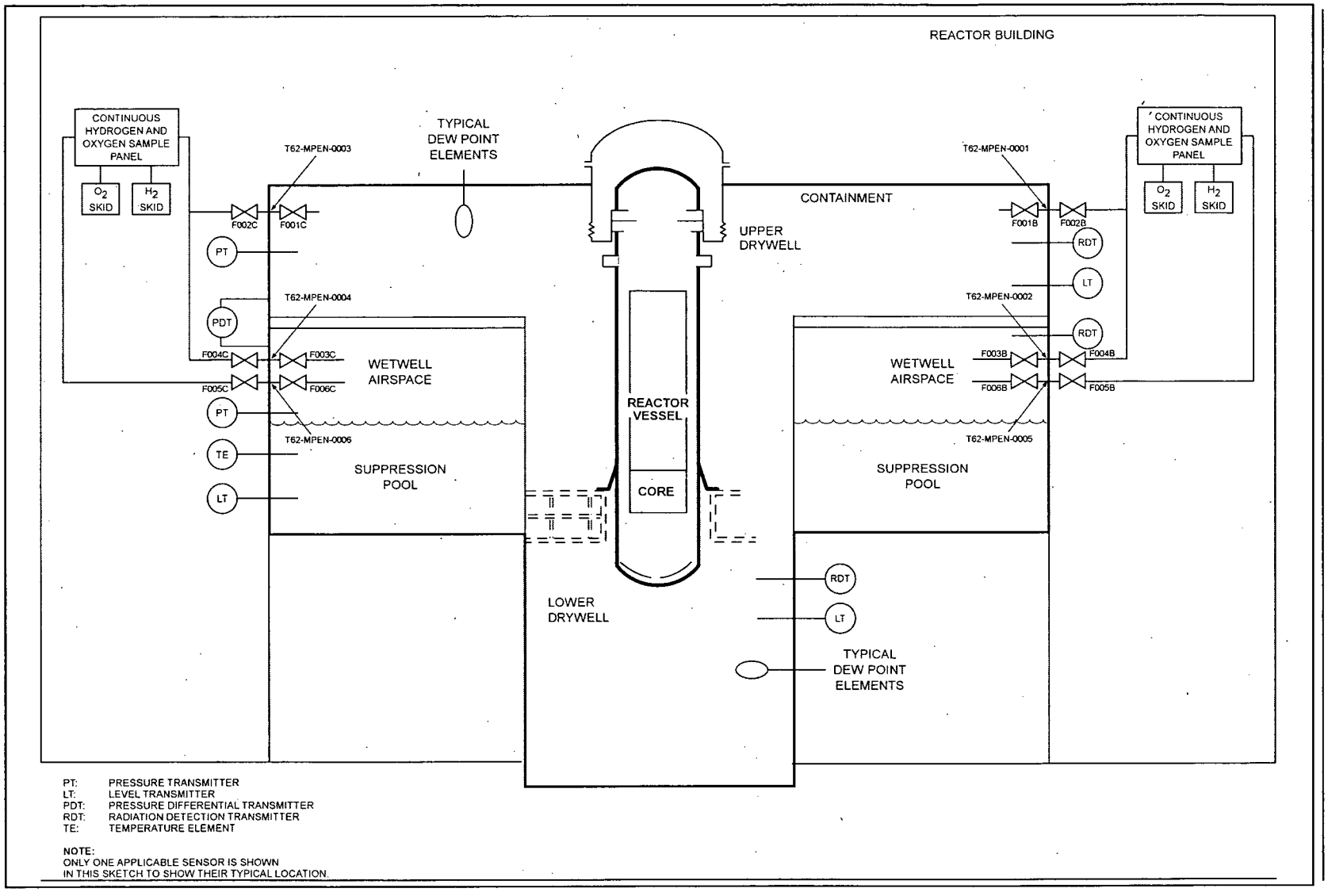

PT: PRESSURE TRANSMITTER
LT: LEVEL TRANSMITTER
PDT: PRESSURE DIFFERENTIAL TRANSMITTER
RDT: RADIATION DETECTION TRANSMITTER
TE: TEMPERATURE ELEMENT

NOTE:
ONLY ONE APPLICABLE SENSOR IS SHOWN
IN THIS SKETCH TO SHOW THEIR TYPICAL LOCATION.

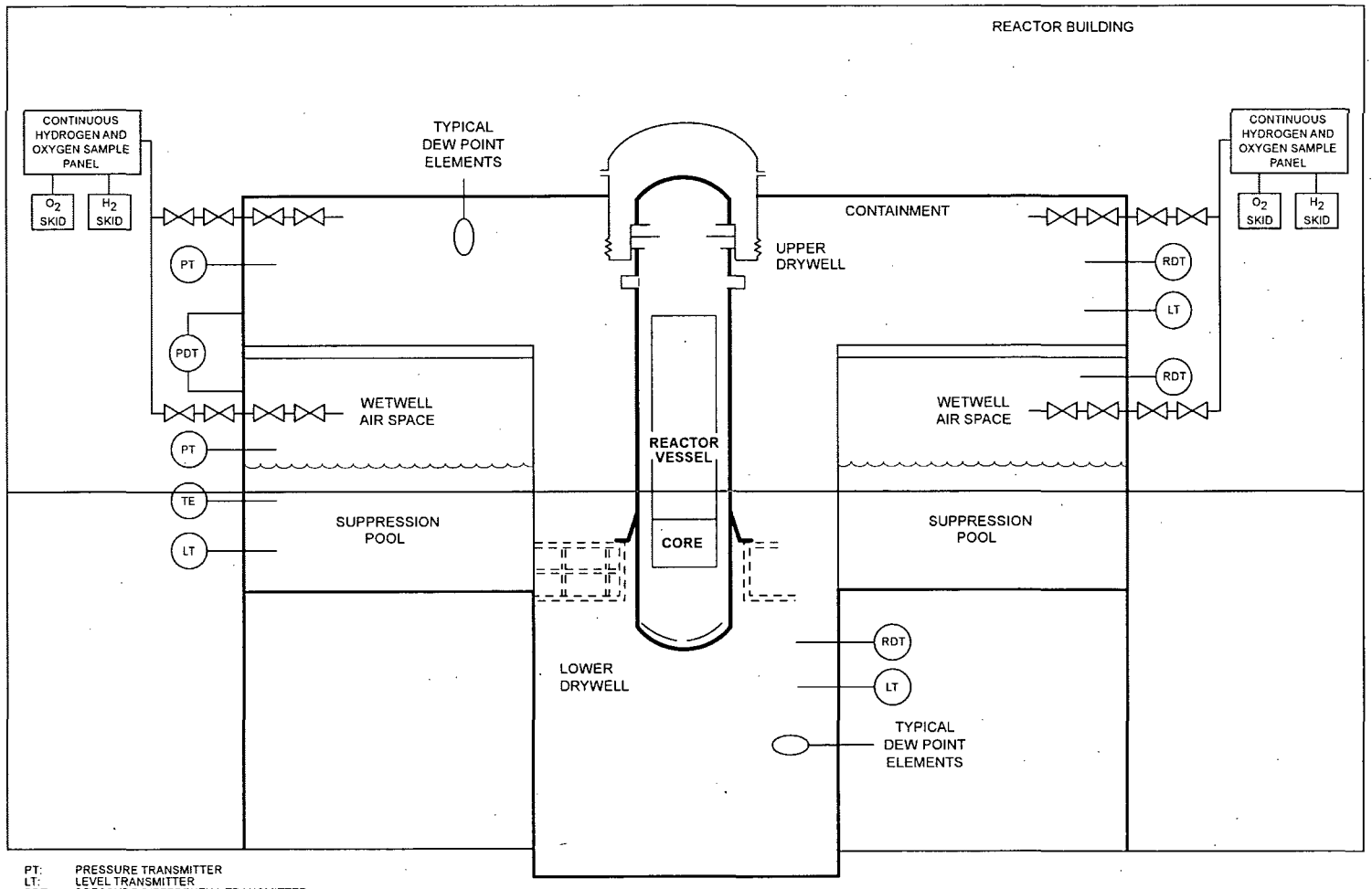

Figure 7.5-1. Containment Monitoring System Design

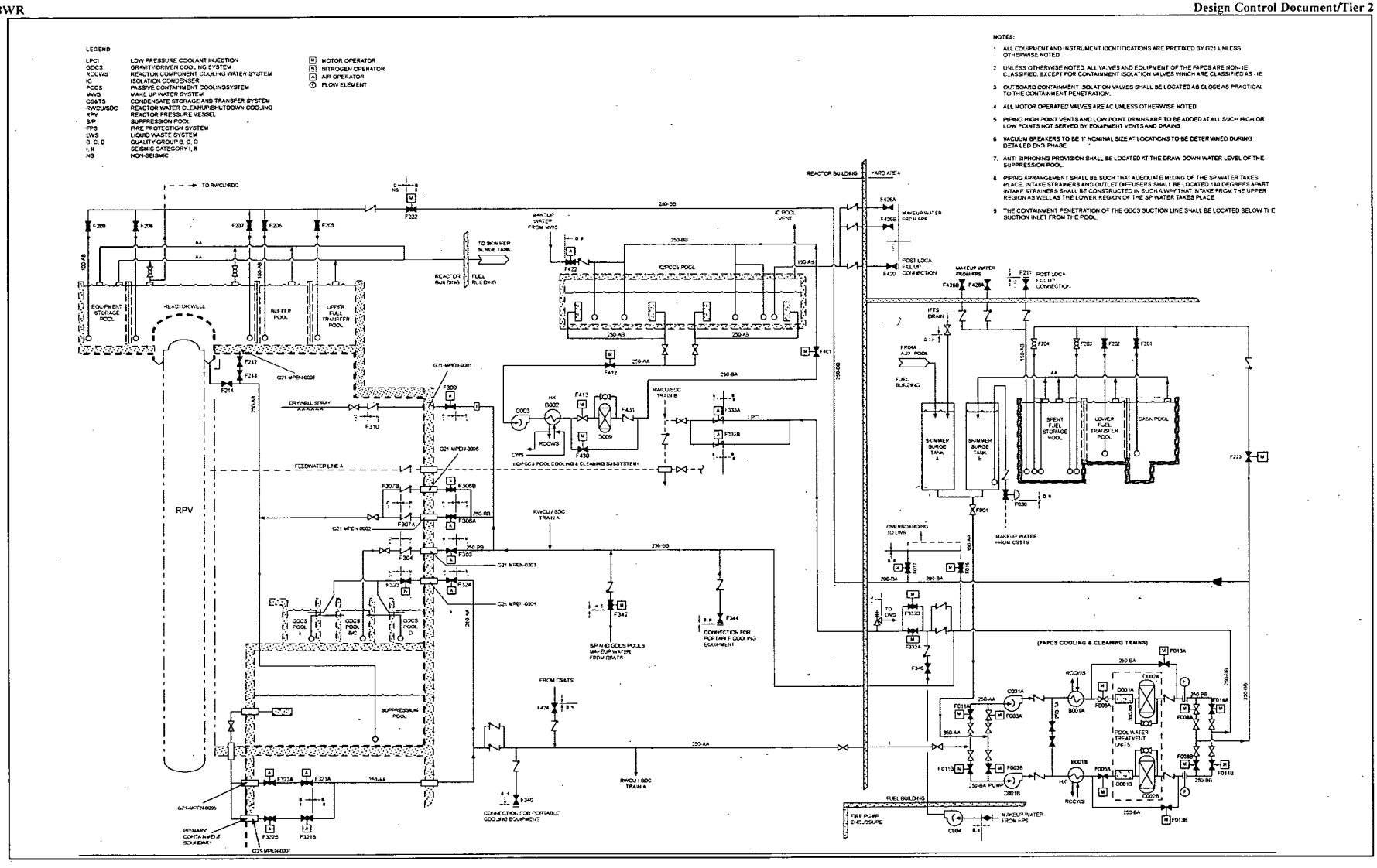
LEGEND
LPCI LOW PRESSURE COOLANT INJECTION
GDCS GRAVITY-DRIVEN COOLING SYSTEM
RCCWS REACTOR COMPONENT COOLING WATER SYSTEM
IC ISOLATION CONDENSER
PCCS PASSIVE CONTAINMENT COOLING SYSTEM
MWS MAKE UP WATER SYSTEM
CS&TS CONDENSATE STORAGE AND TRANSFER SYSTEM
RWCU/SDC REACTOR WATER CLEANUP/SHUTDOWN COOLING
RPV REACTOR PRESSURE VESSEL
S/P SUPPRESSION POOL
FPS FIRE PROTECTION SYSTEM
LWS LIQUID WASTE SYSTEM
B, C, D QUALITY GROUP B, C, D
I, II SEISMIC CATEGORY I, II
NS NON-SEISMIC
M MOTOR OPERATOR
N NITROGEN OPERATOR
A AIR OPERATOR
FE FLOW ELEMENT
NOTES:
1 ALL EQUIPMENT AND INSTRUMENT IDENTIFICATIONS ARE PREFIXED BY G21 UNLESS OTHERWISE NOTED
2 UNLESS OTHERWISE NOTED, ALL VALVES AND EQUIPMENT OF THE FAPCS ARE NON-1E CLASSIFIED, EXCEPT FOR CONTAINMENT ISOLATION VALVES WHICH ARE CLASSIFIED AS -1E
3 OUTBOARD CONTAINMENT ISOLATION VALVES SHALL BE LOCATED AS CLOSE AS PRACTICAL TO THE CONTAINMENT PENETRATION.
4 ALL MOTOR OPERATED VALVES ARE AC UNLESS OTHERWISE NOTED
5 PIPING HIGH POINT VENTS AND LOW POINT DRAINS ARE TO BE ADDED AT ALL SUCH HIGH OR LOW POINTS NOT SERVED BY EQUIPMENT VENTS AND DRAINS
6 VACUUM BREAKERS TO BE 1" NOMINAL SIZE AT LOCATIONS TO BE DETERMINED DURING DETAILED ENG PHASE
7. ANTI SIPHONING PROVISION SHALL BE LOCATED AT THE DRAW DOWN WATER LEVEL OF THE SUPPRESSION POOL
8 PIPING ARRANGEMENT SHALL BE SUCH THAT ADEQUATE MIXING OF THE SP WATER TAKES PLACE. INTAKE STRAINERS AND OUTLET DIFFUSERS SHALL BE LOCATED 180 DEGREES APART INTAKE STRAINERS SHALL BE CONSTRUCTED IN SUCH A WAY THAT INTAKE FROM THE UPPER REGION AS WELL AS THE LOWER REGION OF THE SP WATER TAKES PLACE
9 THE CONTAINMENT PENETRATION OF THE GDCS SUCTION LINE SHALL BE LOCATED BELOW THE SUCTION INLET FROM THE POOL.
TO RWCU/SDC
REACTOR BUILDING
YARD AREA
TO SKIMMER SURGE TANK
IC/PCCS POOL
EQUIPMENT STORAGE POOL
REACTOR WELL
UPPER FUEL TRANSFER POOL
DRYWELL SPRAY
FEEDWATER LINE A
RPV
SUPPRESSION POOL
GDCS POOL A
GDCS POOL BC
GDCS POOL D
IC/PCCS POOL COOLING & CLEANING SUBSYSTEM
RWCU/SDC TRAIN B
RWCU/SDC TRAIN A
S/P AND GDCS POOLS MAKEUP WATER FROM CS&TS
CONNECTION FOR PORTABLE COOLING EQUIPMENT
FROM CS&TS
CONNECTION FOR PORTABLE COOLING EQUIPMENT
PRIMARY CONTAINMENT BOUNDARY
SPENT FUEL STORAGE POOL
LOWER FUEL TRANSFER POOL
CASK POOL
SKIMMER SURGE TANK A
SKIMMER SURGE TANK B
OVERFLOW PIPING TO LWS
MAKEUP WATER FROM CS&TS
(FAPCS COOLING & CLEANING TRAINS)
POOL WATER TREATMENT UNITS
FUEL BUILDING
FIRE PUMP ENCLOSURE
MAKEUP WATER FROM FPS

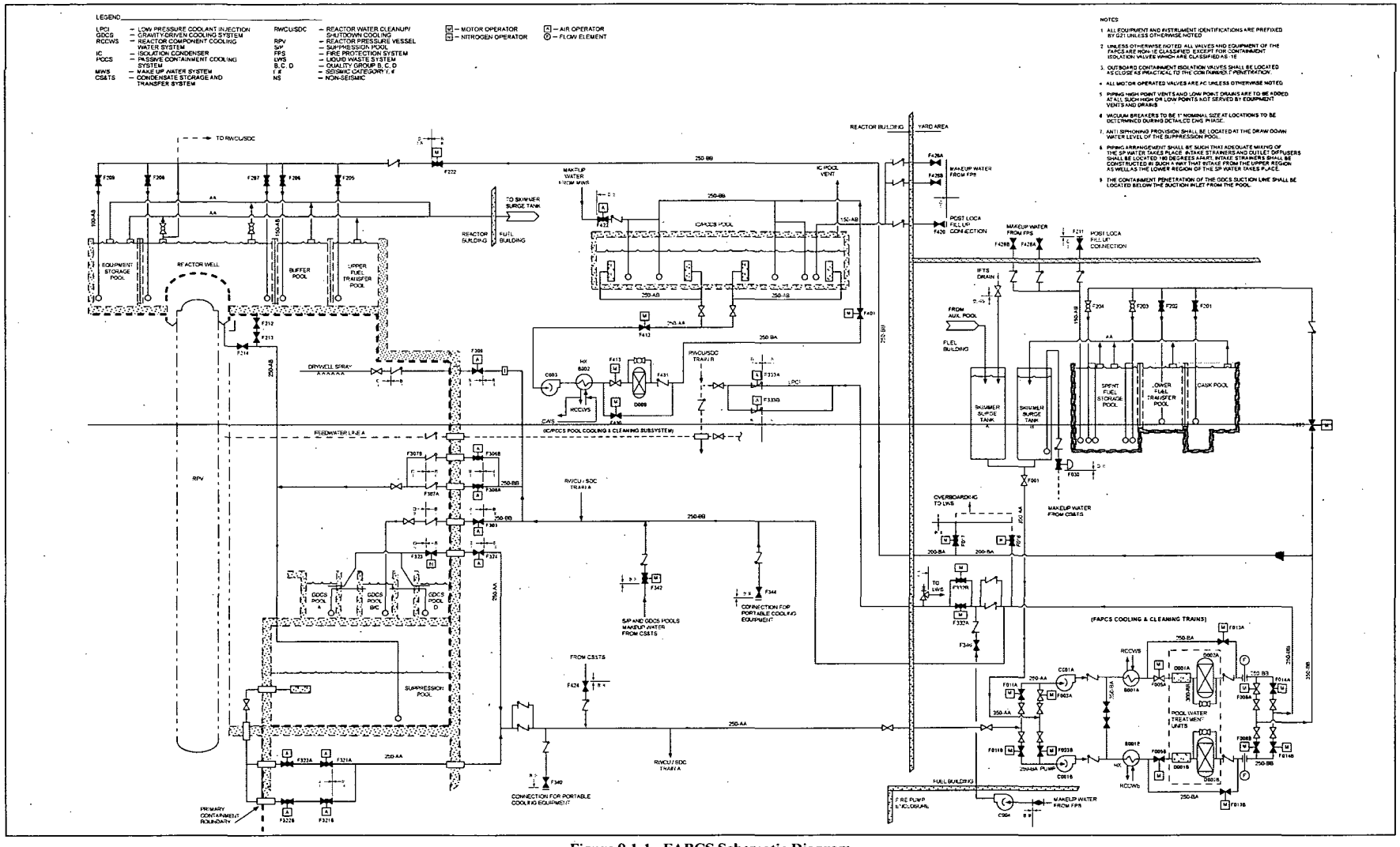

Figure 9.1-1. FAPCS Schematic Diagram

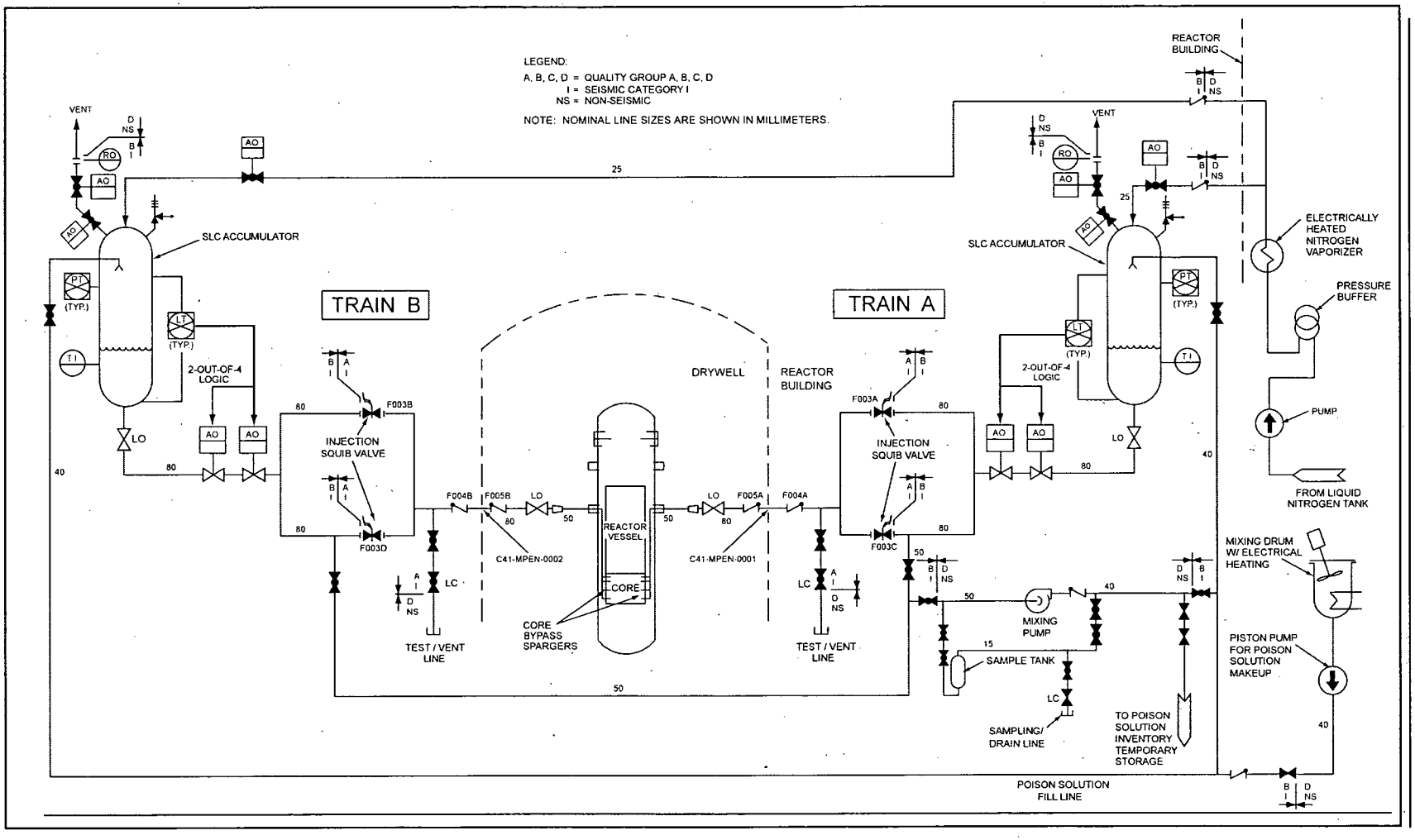
LEGEND:
A, B, C, D = QUALITY GROUP A, B, C, D
I = SEISMIC CATEGORY I
NS = NON-SEISMIC
NOTE: NOMINAL LINE SIZES ARE SHOWN IN MILLIMETERS.
REACTOR BUILDING
VENT
SLC ACCUMULATOR
TRAIN B
TRAIN A
2-OUT-OF-4 LOGIC
INJECTION SQUIB VALVE
F003B
F003D
F003A
F003C
F004B
F005B
F005A
F004A
C41-MPEN-0002
C41-MPEN-0001
DRYWELL
REACTOR BUILDING
REACTOR VESSEL
CORE
CORE BYPASS SPARGERS
TEST / VENT LINE
ELECTRICALLY HEATED NITROGEN VAPORIZER
PRESSURE BUFFER
PUMP
FROM LIQUID NITROGEN TANK
MIXING DRUM W/ ELECTRICAL HEATING
PISTON PUMP FOR POISON SOLUTION MAKEUP
MIXING PUMP
SAMPLE TANK
SAMPLING/ DRAIN LINE
TO POISON SOLUTION INVENTORY TEMPORARY STORAGE
POISON SOLUTION FILL LINE

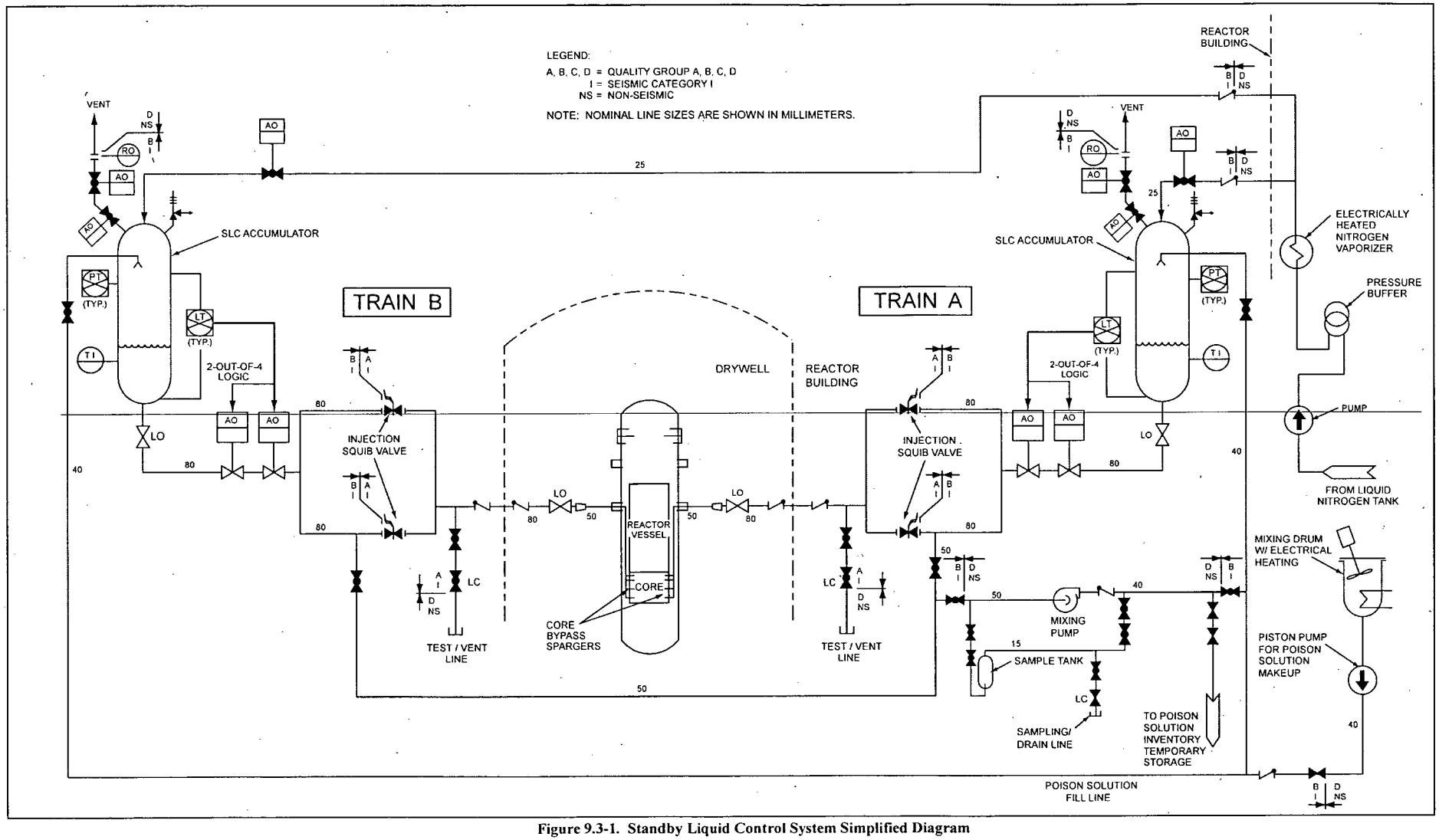

Figure 9.3-1. Standby Liquid Control System Simplified Diagram

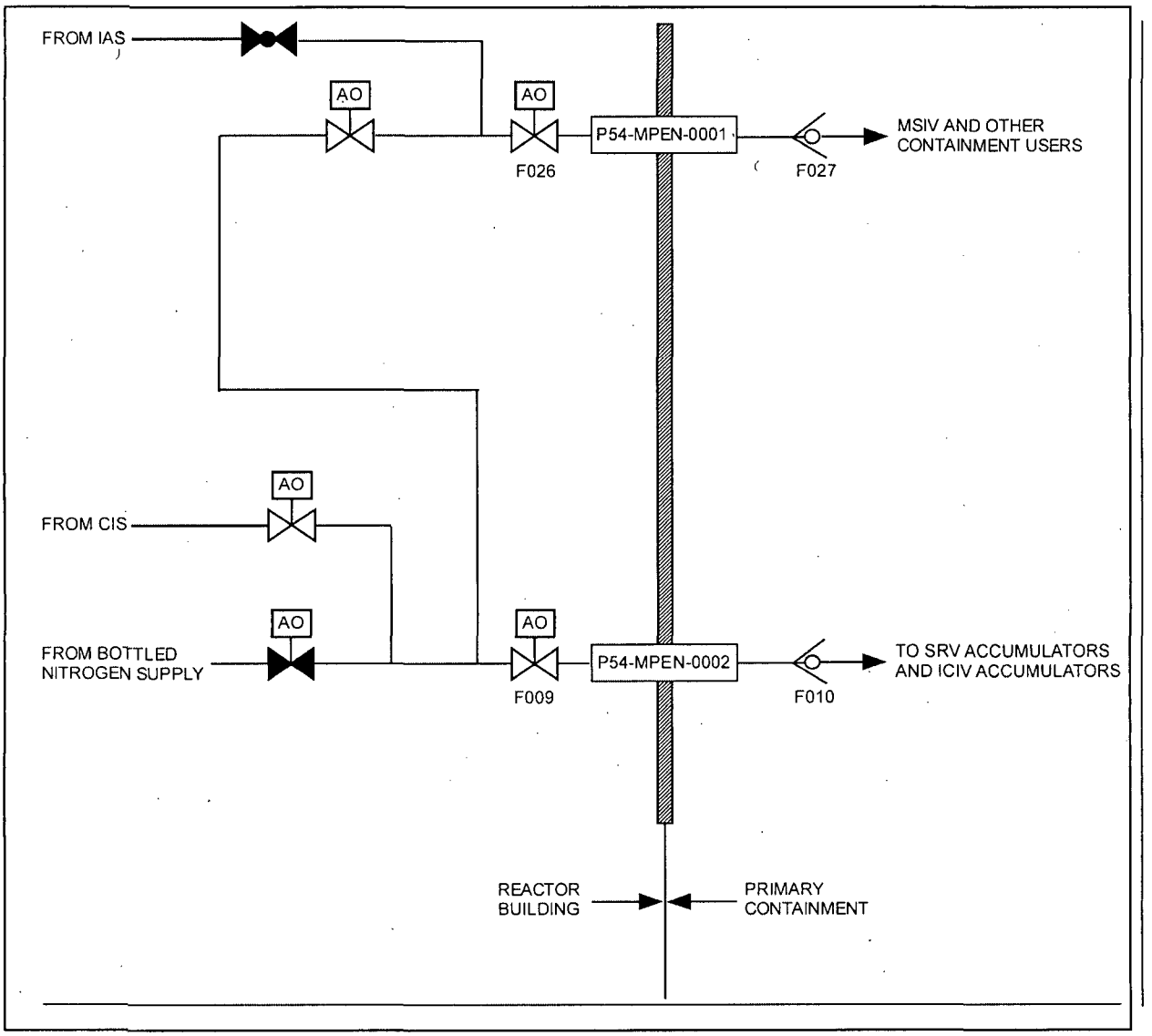
FROM IAS
AO
AO
P54-MPEN-0001
F026
F027
MSIV AND OTHER
CONTAINMENT USERS
AO
FROM CIS
AO
AO
FROM BOTTLED
NITROGEN SUPPLY
P54-MPEN-0002
F009
F010
TO SRV ACCUMULATORS
AND ICIV ACCUMULATORS
REACTOR
BUILDING
PRIMARY
CONTAINMENT

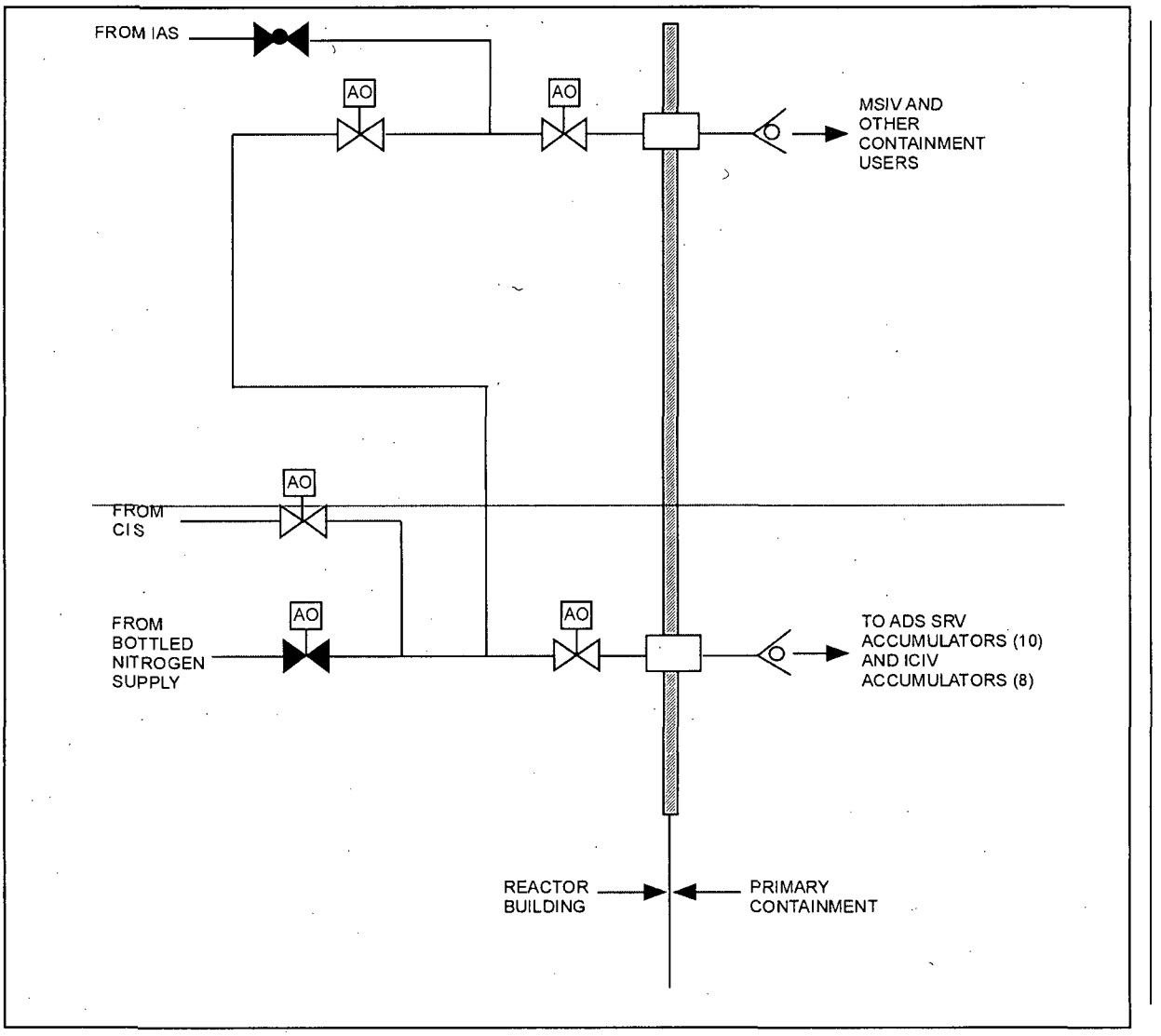

Figure 9.3-4. HPNSS Simplified Diagram