6.0 WATER SUPPLY

6.1 WATER REQUIREMENTS AND SOURCES

6.1.1 Water Needed for Construction

UniStar's Estimated Amount of Water Needed for Construction

During the construction of Unit 3, water will be required for sanitary use for the construction personnel, concrete manufacturing, dust control, testing and flushing lines, and filling tanks and piping for integrity testing. In the November 2007 Technical Report, UniStar estimated that an average of 168,000 gallons per day (gpd) of water will be needed for construction for four of six years to support the construction of the plant. Table 6-1 presents UniStar's estimated annual amounts of fresh water needed for the six-year construction period, and provides the basis for UniStar's 168,000 gpd estimate during years 2 through 5. The 168,000 gpd estimate is derived from dividing the 47,800,000 gallon total by the 285 construction days per year. UniStar stated in Section 5.4.1.2 of its November 2007 Technical Report that the water use estimates are based on an expected maximum number of construction workers and extensive dust control in all construction years, and is considered to be a high estimate of actual water use.

A portion of the water listed under the heading of "People" in Table 6-1 will be supplied for drinking water. In response to DNR Data Request No. 8-4, UniStar indicated that bottled water will be provided for drinking during the initial period of construction, but once the workforce is expanded treated water will be provided for drinking via water jugs typically found at large construction sites. Water for these jugs will be supplied via storage tanks which will be replenished from the on-site well(s). Thus UniStar will need to obtain a Water and Sewerage Construction Permit and Certificate of Potability from MDE WMA in accordance with COMAR 26.03.12. This permit will be necessary because UniStar would be operating a water supply system that treats raw water and distributes potable water to serve 25 or more persons on a day-to-day basis. In addition, UniStar will need to ensure that the water supplied for drinking meets U.S. Environmental Protection Agency drinking water standards, including the 0.010 mg/L limit for arsenic. Ground water extracted from the Aquia aquifer at Calvert Cliffs Units 1 and 2 typically contains arsenic concentrations above this limit and thus the water is

treated by Calvert Cliffs Nuclear Power Plant, Inc. before being distributed for potable use.

Table 6-1 ***Estimated Annual Amounts of Fresh Water Needed for Construction in Gallons (from UniStar Technical Report Table 5.4-1 and UniStar's Response to DNR Data Request No. 7-6)***

Construction Year	People	Concrete Mixing and Curing (3)	Dust Control/Hydrostatic Testing (4)	Annual Totals
1	8,550,000 (1)	2,220,000	11,400,000	22,120,000
2	34,200,000 (2)	2,220,000	11,400,000	47,800,000
3	34,200,000	2,220,000	11,400,000	47,800,000
4	34,200,000	2,220,000	11,400,000	47,800,000
5	34,200,000	2,220,000	11,400,000	47,800,000
6				31,868,000 (5)

Notes:
(1) Estimated at 1,000 persons using 30 gallons per day (gpd) for 285 days per year.
(2) Estimated at 4,000 persons using 30 gpd for 285 days per year.
(3) Estimated at 6,700 cubic yards per months using 27.61 gallons per cubic yard and 12 months.
(4) Estimated at 40,000 gpd per day for 285 days per year. During year 1, an estimated 40,000 gpd is expected to be used for dust control. Between years 2 and 6, an estimated 40,000 gpd is expected to be used for a combination of dust control and/or hydrostatic testing.
(5) Estimated at two-thirds of the amount used in any year 2 through 5.

In accordance with footnote 4 in Table 6-1, UniStar indicated that 40,000 gpd for the 285-day construction year will be needed for a combination of dust control and hydrostatic testing of lines and tanks. As indicated by UniStar in Table 5.5-1 in the Technical Report and in its response to DNR Data Request No. 1-20c, major excavation and site work will be completed by construction year three, at which time the need to conduct extensive dust control would decrease significantly. As shown in UniStar Table 5.5-1 in the Technical Report, some level of dust control will be necessary throughout the construction period due to vehicle traffic on unpaved roads and stabilizing vegetation is placed in cleared areas. In its

response to DNR Data Request No. 8-1, UniStar indicated that the estimate of water needed for dust control was based on early design concepts and engineering, procurement and construction experience for projects of this magnitude.

Water for hydrostatic testing of lines and tanks needs to deionized and therefore will be treated and stored in two 150,000 gallon tanks prior to a testing event requiring a large volume of water. The treatment and storage of the deionized water will equalize the volume of water needed during peak demand periods.

In its response to DNR Data Request No. 7-6, UniStar revised the construction water demand for concrete curing and mixing listed in Table 6-1. UniStar indicated in the response to the data request that two concrete batch plants will be constructed at the Unit 3 construction site, and potentially both plants would operate concurrently if necessary. The average sustained rate of concrete placement will be 500 to 800 cubic yards per day (cy/d) with a maximum peak sustained rate of 1,100 to 1,600 cy/d. UniStar estimates that 40.4 gallons of water will be needed per cubic yard of concrete. Lastly, UniStar indicated that 24 million gallons of water will be required to manufacture the total estimated amount of 470,000 cubic yards of concrete needed for the duration of the construction period. This amount of water includes 19 million gallons for concrete mixing and curing and 5 million gallons of water for equipment wash down. Thus, the annual average amount of water needed for concrete mixing and curing would be 4,800,000 gallons per construction year (i.e., 285 days) or 16,900 gpd. UniStar indicated in its response to DNR Data Request No. 8-2 that the water values described above represent a best estimate of a conservative upper boundary value based on the current level of maturity of the design and construction plan.

Rather than the 47,800,000 gallons per indicated in Table 6-1, UniStar revised its total estimated annual water use to 50,380,000 during years 2 through 5. This translates to an average daily demand of 176,800 gpd for 285 construction days.

In addition, UniStar indicated in its response to DNR Data Request No. 7-6 that the maximum anticipated single placement of concrete will be for the Circulating Water System Cooling Tower foundation. The concrete placement for this structure is estimated to be approximate 47,000 cubic yards, requiring 1.9 million gallons, and taking 10 to 15 days to complete. This information provides a peak water demand for a month of maximum use determination.

MDE's Estimated Amount of Water Needed for Construction

MDE WMA appropriates water on a 365 days per year basis, and therefore adjusted UniStar's water demand downward to reflect the 365 versus the 285-day use. MDE WMA also considers the month of maximum use to account for the maximum amount of water to support short-term needs. Therefore, MDE derived an independent value for the water needed during construction for an average daily use and a month of maximum use.

Additionally, MDE WMA does not agree that the 168,000 gpd estimate for construction water demand (131,000 gpd based on a 365 day year) was a reasonable estimate. MDE WMA determined that the assumption that each construction worker will use 30 gpd of water for sanitary purposes was an overestimate, and that experience shows that 15 gpd per worker is a more reasonable estimate. The 15 gpd estimate reduces the estimate for the average daily demand for construction workers from 120,000 gpd to 60,000 gpd

MDE WMA's estimate of the average annual construction water demand for years 2 through 5 on a 365-day basis is derived as follows:

- People – (60,000 gpd*285 days)/365 days = 46,800 gpd;
- Concrete Mixing and Curing - (16,900 gpd*285 days)/365 days = 13,200 gpd; and
- Dust Control and Hydrostatic Testing - (40,000 gpd*285 days)/365 days = 31,200 gpd.

The total average annual demand for water during construction years 2 through 5 will be 91,200 gpd. MDE WMA is adding contingency to provide a total of 100,000 gpd over a 365 day period.

Maximum peak daily demand is based on the amount of water needed for concrete mixing and curing, and for sanitary and dust control or hydrostatic testing during one month. The assumptions used by MDE WMA to calculate the month of maximum use numbers for the three categories is described below.

- People – MDE WMA assumed that construction would occur all 30 days in the month, and thus 15 gpd per person for 4,000 workers for 30 days would create a water demand of 1,800,000 gallons for 30 days or 60,000 gpd;

- Concrete Mixing and Curing - UniStar indicated in its response to DNR Data Request No. 7-6 that approximately 1,900,000 gallons of water will be needed over 15 days to place the concrete for the CWS cooling tower foundation. Over a 30-day month, water for concrete mixing and curing will be 126,700 gpd for 15 days (1,900,000 gallons/15 days) and 13,200 gpd for 15 days (198,000 gallons), for an average of water demand of 69,900 (rounded to 70,000 gpd); and

- Dust Control and Hydrostatic Testing – MDE WMA assumed that 60 percent more water compared to the 950,000 gallons per month average would be needed. This equates to 1,520,000 gallons, and when divided over a 30-day month, provides 51,000 gpd for dust suppression.

The total demand for water use during the month of maximum use during construction years 2 through 5 will be 181,000 gpd. MDE WMA rounded this number to provide a total of 180,000 gpd over a 30-day month of maximum use period. Note that UniStar indicated that two, 150,000-gallon raw water storage tanks are being considered to equalize the water use during critical concrete pours (UniStar Response to DNR Data Request No. 7-6).

6.1.2 *Potential Sources of Water Needed for Construction*

UniStar's Approach to Supply Water for Construction

UniStar identified four potential sources of water to address water demand during construction in the Technical Report and clarified its position regarding the feasibility of these sources in its response to DNR Data Request No. 1-15. The four potential sources are as follows:

1. Authorization to use available on-site ground water under the ground water appropriations limit for Calvert Cliffs Units 1 and 2;
2. Water collected during dewatering onsite excavations, which will be used for dust control;
3. Desalinated Chesapeake Bay water from the to-be constructed desalination plant (expected to be constructed and on-line during the sixth year of construction and available for the commissioning process of Unit 3); and
4. Offsite water trucked to the construction site and stored until used.

Each potential source is described further below.

UniStar requested PSC approval to obtain 60,000 gpd of ground water from Units 1 and 2. Calvert Cliffs Units 1 and 2 are owned by Calvert Cliffs Nuclear Power Plant, Inc., which is a separate company from UniStar. Calvert Cliffs Units 1 and 2 has a ground water appropriation to use ground water from five production wells completed in the Aquia aquifer. Ground water is used in Units 1 and 2 to provide boiler makeup for the steam cycle and for potable and other in-plant uses that require fresh water. Permit CA1969G010 allows Calvert Cliffs Nuclear Power Plant, Inc. to extract ground water under the following limits:

- **Average Daily Use**. The annual average water requirement is 450,000 gpd from the Aquia aquifer; and

- **Month of Maximum Use**. The maximum daily water use is 865,000 gpd from the Aquia aquifer for the month of maximum use.

Table 6-2 shows the amount of ground water used by Units 1 and 2 over the past 10 years. The data in the table shows that the annual average rate of water use has ranged from 340,000 to 420,000 gpd over the period 1997 to 2006, with an average of 390,000 gpd. The highest years of ground water use were in 2003 and 2004, with annual average rates of 410,000 and 420,000 gpd. UniStar indicated in its response to DNR Data Request No. 1-18 that the high use rates were attributed to leakage, which was repaired and no longer occurs. Ground water use decreased to 340,000 and 350,000 in 2005 and 2006, respectively. If the use rates in 2003 and 2004 were an aberration, there would be approximately 60,000 gpd available from the existing Units 1 and 2 appropriation for use at Unit 3. The UniStar Technical Report (Table 5.4-2) indicates that monthly use of ground water for the period 2002 to 2005 ranged from 9,400,000 to 15,700,000 gallons per month.

Table 6-2 Average Daily Ground Water Withdrawal from the Aquia Aquifer for Calvert Cliffs Units 1 and 2 (in million gallons per day)

Year	Withdrawal Amount	Year	Withdrawal Amount
1997	0.41	2002	0.39
1998	0.37	2003	0.41
1999	0.39	2004	0.42
2000	0.41	2005	0.34
2001	0.40	2006	0.35

Source: PPRP CEIR-14, February 2008, Table 4-12.

UniStar changed its position regarding the proposal to obtain excess water from the existing Units 1 and 2 ground water appropriation in its response to DNR Data Request No. 13-6. Instead, UniStar decided to request approval from the PSC for the withdrawal of ground water from new wells installed on or near the Unit 3 site. The revised approach to supply water for construction is described further below.

As discussed in Section 5.3 of this Environmental Review, UniStar estimates that dewatering of excavations for foundations will generate between 75,000 and 100,000 gpd of ground water from the Surfical aquifer. UniStar is proposing to collect the water generated during dewatering, store it in tanks or impoundments, and apply the stored water to exposed soils and road surfaces for dust control. Although MDE WMA believes that the use of water generated from dewatering is beneficial, the estimate of dewatering presented by PPRP in Section 5.3 indicates that the amount of water that will be generated during dewatering will be less than the 75,000 to 100,000 gpd estimated by UniStar beyond the first year of construction. In addition, it is expected that dewatering will only generate a substantive amount of water during the initial two years of construction because once foundations are complete; the need to dewater will decrease significantly (UniStar Response to DNR Data Request No. 1-20c). Although dewatering will decrease in the third year of construction, the need for dust control will decrease significantly by this time because the majority of the site grading will be completed (UniStar Response to DNR Data Request No. 1-20c). Although there is the potential that dewatering will occur to complete additional excavation work and foundations for

structures after construction year 3, it is expected that little additional ground water will be generated during this period of construction.

Fresh water can be obtained from the desalination plant being constructed to supply water for Unit 3 during the last two quarters of construction year 6 (UniStar Response to DNR Data Request No. 13-2). The purpose and operation of the desalination plant is described in further detail in Section 6.1.2. Once the construction of the desalination plant is complete, a source of fresh water will be available for the commissioning process. UniStar indicated that once the desalination plant comes on-line priority will be given to supply water for the commissioning process, not construction (UniStar Response to DNR Data Request No. 13-2).

UniStar proposes to use water from the desalination plant to provide potable water to the plant workers once the nuclear power plant is operational. As stated previously, UniStar will need to obtain a Water and Sewerage Construction Permit and Certificate of Potability from MDE WMA before water is provided for potable use.

UniStar indicated in its response to DNR Data Request No. 1-15 that trucking of water to address excess water demand during construction will be necessary. UniStar estimated that the amount of water that will be trucked to the site will be between 50,000 and 100,000 gpd, based on its assumption that 168,000 gpd of water will be needed for construction. Further, in its response to DNR Data Request No. 1-16, it was stated that the water will be conveyed to the site in 5,000 gallon tanker trucks and stored. UniStar identified C.L. Pitcher, Inc. as a potential water hauler in its response to DNR Data Request No. 6-6. C.L. Pitcher is located in Prince Frederick and would presumably draw water from the Prince Frederick Water System. There is currently no capacity available from the Prince Frederick Water System to enable C. L. Pritchard to draw 50,000 gpd. Calvert County is withdrawing water from the Prince Frederick Water System at a rate that is greater than its ground water appropriations limits. UniStar indicated in its response to DNR Data Request No. 6-6 that a decision regarding the provider of fresh water to be trucked to the site has not yet been finalized.

UniStar indicated in the Technical Report that authorization for a ground water withdrawal from the temporary installation of wells may be sought as a source of water to meet the water demand during construction. UniStar clarified its position regarding the need for a ground water appropriation for construction in its response to DNR Data Request No. 1-15 and 1-21, where it stated that UniStar does not intend to install any additional wells to provide water for construction activities.

However, at the recommendation of MDE WMA, UniStar filed a request in response to DNR Data Request No. 6-9 to appropriate ground water from the Aquia aquifer to support the construction of the plant. The amounts of ground requested, the duration of the appropriation, and the rationale for granting the appropriation is discussed below under the section titled MDE WMA's Approach to Supply Water for Construction.

After deciding to request approval to obtain 100 percent of the water needed for construction from a new appropriation for Unit 3, UniStar submitted a revised ground water appropriation request for the use of ground water from wells installed on the Unit 3 site for the following amounts (UniStar Response to DNR Data Request No. 13-6):

- Average Daily Use - 100,000 gpd; and
- Month of Maximum Use – 180,000 gpd.

Lastly, UniStar indicated in its response to DNR Data Request No. 6-12 that other sources of water were being sought. In the response to the data request, UniStar stated it had preliminary discussions regarding the use of treated effluent from the Solomons Island WWTP located on Sweetwater Lane in Lusby, Maryland. The discussion indicated that up to 15,000 gpd of treated effluent could be available for use in dust suppression.

UniStar provided a schedule for construction in their August 8, 2008 Revised Technical Report that indicates that the construction period will extend over six and half years (Table 1.4-1 Rev.2). However, UniStar expressed concerns that a potential delay in the approval provided by the NRC or other regulatory agencies, or construction delays due to weather, equipment delivery or labor could delay in the start of construction, or extend the period of construction beyond six and half years (UniStar Response to DNR Data Request No. 13-2). Therefore, UniStar requested that the appropriation of ground water for construction extend at least eight years from the initiation of withdrawal (UniStar Response to DNR Data Request No. 13-2). In addition, UniStar indicated that a delay in the schedule would affect the duration of water used rather than the quantity, so there would be no increase in demand if the construction schedule was extended.

MDE WMA's Approach to Supply Water for Construction

As described in Section 6.1.1, MDE WMA estimates that the total water demand for the construction of Unit 3 is as follows:

- Average Daily Use - 100,000 gpd; and
- Month of Maximum Use – 180,000 gpd.

MDE WMA recommends that the three sources of water listed below be used to meet water demand during construction:

1. Water collected during dewatering onsite excavations to be used for dust control, but will likely only be available during the first two years of construction;
2. Use of treated effluent from local wastewater plants that meets ground water discharge quality standards and site application requirements for use for dust control, or water from a hauler that has access to a source with adequate permitted capacity; and
3. Ground water obtained from a short-term appropriation granted from the Aquia aquifer.

The rationale for each of these sources is described below.

MDE WMA supports the use of water collected from dewatering for dust control to its fullest extent practicable. However, as explained in Section 5.3, the estimate of water generated from the excavation of the power block and other excavations after the initial ground water in storage is removed during the first year of construction is uncertain for two reasons:

1. The presence of the power block on a hydrologic divide will limit the amount of ground water that flows into the excavation; and
2. There is a limited amount of ground water within the exposed Chesapeake confining unit.

Some additional water will be generated during the second year of construction from rainfall that falls into the excavations. Once the dewatering of major excavations is complete in construction year 2, this source of water will be diminished. Thus, this source will not be available to provide water for dust control in construction years 3 through 6.

MDE WMA supports the approach of hauling treated effluent from local wastewater treatment plants. In addition to the Solomons Island WWTP, MDE UniStar should contact Calvert County to seek permission to reuse treated effluent from the Prince Frederick WWTP, which consists of two separate plants with a combined treatment capacity of 750,000 gpd, one on Tobacco Ridge Road and the other in Barstow (Draft Calvert County Comprehensive Water & Sewerage Plan 2007 Update, August 2007). Before applying treated effluent for dust control, UniStar would need to

obtain approval from MDE's Wastewater Permits Program in accordance with COMAR 26.08 to discharge the treated effluent onto the ground for dust control.

UniStar's proposal to truck ground water to the site cannot be evaluated at this time because UniStar has not shown that the source of the water provided by a hauler is from a water system that has adequate capacity on its water appropriations permit. In addition, MDE WMA recommends that fresh water not be hauled from off-site sources for use until UniStar identifies the hauler, the water source, a maximum amount of water to be hauled, and the approximate period of time that the water will be hauled to the Unit 3 site.

After consideration of the alternatives presented by UniStar and the uncertainty associated with hauling water from an off-site supplier, MDE WMA recommends that UniStar be granted a short-term ground water appropriation from the Aquia aquifer to provide water for construction, rather than be permitted to supply water from trucking it from off-site sources. MDE WMA expects that the short-term ground water appropriation will have the following limits:

- **Average Daily Use**. The annual average water requirement is 100,000 gpd from the Aquia aquifer; and

- **Month of Maximum Use**. The maximum daily water use is 180,000 gpd from the Aquia aquifer for the month of maximum use.

These limits will provide UniStar flexibility to meet the total estimated construction water demand. MDE WMA considered other sources including other aquifers, including the Piney Point and Lower Patapsco aquifers. The Aquia aquifer was selected based on the drawdown analysis presented in Section 6.3, which demonstrates that the impacts to the aquifer and surrounding users are acceptable, and the reasonable depth of the aquifer.

MDE WMA conducted the evaluation of impact to the aquifer and other users to support this determination using methods applied by the agency to evaluate requested appropriations of ground water in the confined aquifers of the Coastal Plain. The results of this evaluation are described in Section 6.3. The results indicate that the impacts to the Aquia aquifer and users of the aquifer are acceptable because of the short duration of the ground water withdrawal.

In summary, MDE recommends the three sources and the annual average amounts of water listed below be used to support the construction of Unit 3:

1. Construction dewatering to the extent that it is available;
2. Use of treated effluent from local wastewater treatment plants that meets ground water discharge quality standards and site application requirements for use as dust control, or water from a hauler that have access to a source with adequate permitted capacity; and
3. Ground water appropriations from the Aquia aquifer - 100,000 gpd for the average day.

MDE WMA agrees with UniStar's position that the duration of the construction period could be extended to reflect potential delays in obtaining regulatory approvals or delays related to equipment delivery. Although MDE WMA believes that the overall demand will likely increase if the schedule is extended depending on the activity. For example, water for truck washing and dust control will be needed for a longer period of time if the construction period is longer than anticipated. However, MDE WMA believes that the increase in demand would not be significant enough to warrant a change in the appropriation amount. Therefore, MDE WMA recommends that the ground water appropriation for construction be provided for a period of eight years from the date of the issuance of the CPCN. MDE WMA further recommends that this eight-year duration be extended for a period of one-year if the construction schedule is extended.

The amount of ground water proposed for use in Calvert Cliffs Unit 3 during construction is reasonable for three reasons:

1. The assumptions presented above regarding the daily volumes of water needed to support construction are reasonable;
2. The proposed primary uses of ground water for sanitary supply, dust control, and concrete mixing are typical uses for ground water at construction sites; and
3. The projected duration of construction spanning over six years is reasonable.

6.1.3 Water Needed for Operation

Calvert Cliffs Unit 3 will require water for cooling and operational purposes. UniStar has requested that the Chesapeake Bay be the source of

water for the operations. UniStar estimates that the water demand for operations is as follows:

- **Annual Average**. The annual average water requirement is estimated to be 63,000,000 gpd; and
- **Maximum**. The maximum use is estimated to be 72,000,000 gallons in any one day.

UniStar indicated in the Revised Technical Report that normal plant operations will require an estimated demand of 63.0 mgd, from which 4.41 mgd will be processed through the desalination plant to supply fresh water for the ESWS cooling towers and other processes. UniStar further stated that during refueling outages, which will occur approximately every two years and last approximately one month, the maximum water demand will rise to 72.0 mgd for the initial plant cool down and then decrease to meet only the fresh water demand for the onsite workforce. The basis for the total water demand from the Chesapeake Bay is described in Section 2.3.1 and Table 2.3-1 of the Revised Technical Report. Note that the Chesapeake Bay water demand shown on Table 2.3-1 does not include an additional 5 percent contingency added to the total demand by UniStar to account for any changes during detailed design. UniStar indicated in its response to DNR Data Request No. 13-1 that Table 2.3-1 will be revised to include a footnote to capture the 5 percent contingency included in UniStar's request to appropriate waters of the State.

Figure 6-1 illustrates the cooling water systems that are part of the Unit 3 design. Table 2.3-1 provided in UniStar's Revised Technical Report shows that 93 percent of the Chesapeake Bay withdrawal will supply the CWS cooling tower, and that 7 percent will supply the desalination plant to generate fresh water for the ESWS and other sources. The CWS provides cooling water for the turbine condenser and closed cooling heat exchanger. The cooling tower is expected to be operated at two cycles of concentration. In the closed loop CWS cooling tower, approximately half of the water will be lost to the atmosphere as evaporation and the other half will be released as blowdown.

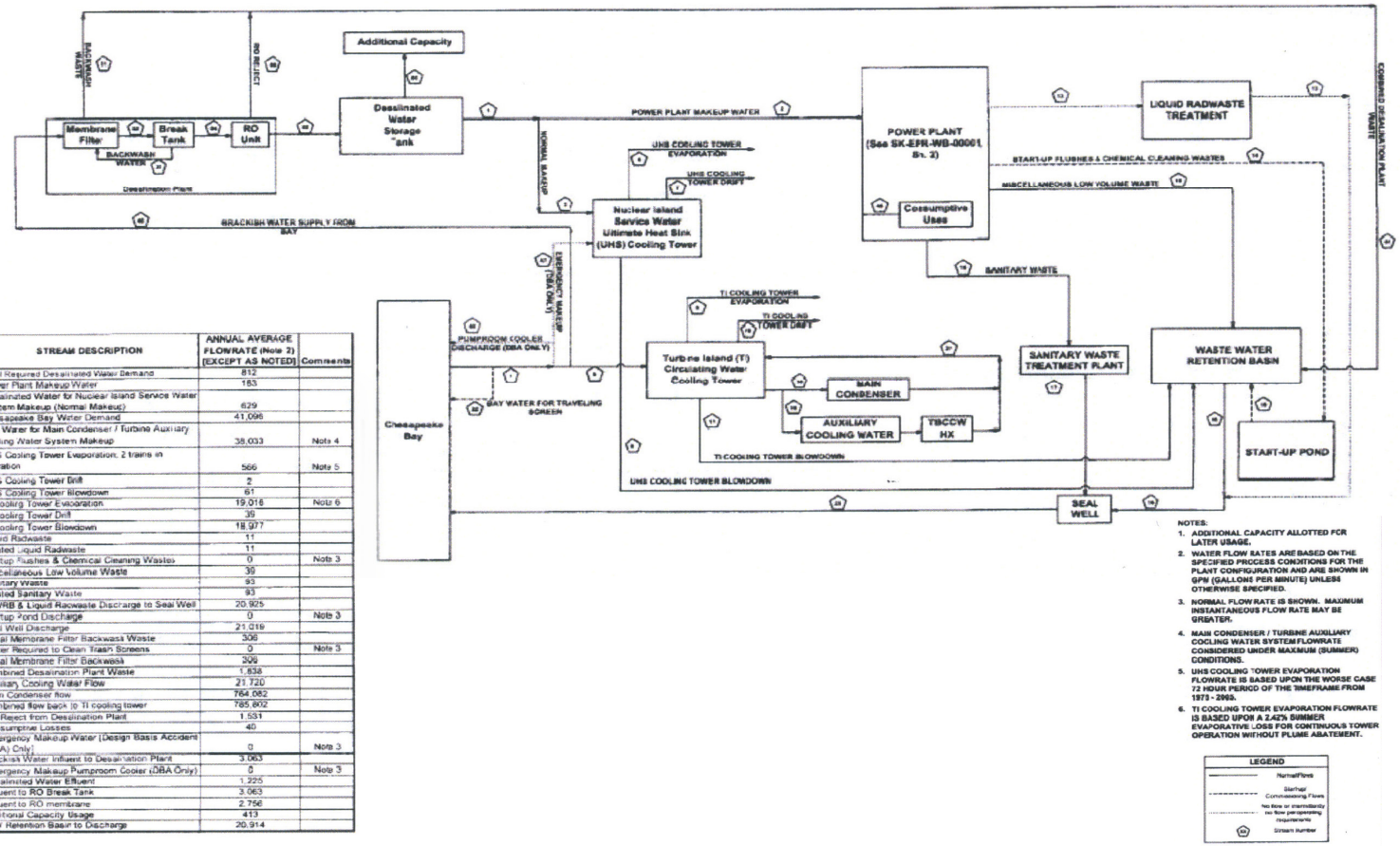

STREAM NO.	STREAM DESCRIPTION	ANNUAL AVERAGE FLOWRATE (Note 2) (EXCEPT AS NOTED)	Comments
1	Total Required Desalinated Water Demand	812	
2	Power Plant Makeup Water	183	
3	Desalinated Water for Nuclear Island Service Water System Makeup (Normal Makeup)	629	
4	Chesapeake Bay Water Demand	41,096	
5	Bay Water for Main Condenser / Turbine Auxiliary Cooling Water System Makeup	38,033	Note 4
6	UHS Cooling Tower Evaporation: 2 trains in operation	566	Note 5
7	UHS Cooling Tower Drift	2	
8	UHS Cooling Tower Blowdown	61	
9	TI Cooling Tower Evaporation	19,016	Note 6
10	TI Cooling Tower Drift	39	
11	TI Cooling Tower Blowdown	18,977	
12	Liquid Radwaste	11	
13	Treated Liquid Radwaste	11	
14	Startup Flushes & Chemical Cleaning Wastes	0	Note 3
15	Miscellaneous Low Volume Waste	39	
16	Sanitary Waste	93	
17	Treated Sanitary Waste	93	
18	WWRB & Liquid Radwaste Discharge to Seal Well	20,925	
19	Startup Pond Discharge	0	Note 3
20	Seal Well Discharge	21,019	
21	Desal Membrane Filter Backwash Waste	306	
22	Water Required to Clean Trash Screens	0	Note 3
32	Desal Membrane Filter Backwash	306	
33	Combined Desalination Plant Waste	1,838	
35	Auxiliary Cooling Water Flow	21,720	
36	Main Condenser flow	764,082	
37	Combined flow back to TI cooling tower	785,802	
44	RO Reject from Desalination Plant	1,531	
46	Consumptive Losses	40	
47	Emergency Makeup Water (Design Basis Accident (DBA) Only)	0	Note 3
48	Brackish Water Influent to Desalination Plant	3,063	
49	Emergency Makeup Pumproom Cooler (DBA Only)	0	Note 3
52	Desalinated Water Effluent	1,225	
53	Influent to RO Break Tank	3,063	
54	Influent to RO membrane	2,756	
55	Additional Capacity Usage	413	
56	WW Retention Basin to Discharge	20,914	

Figure 6-1
Calvert Cliffs Unit 3 Water Balance Diagram

Source: Revised Figure 2.3-1 (UniStar's CPCN Application Technical Report)

Calvert Cliffs Unit 3 requires a source of fresh water to support operations. UniStar has proposed to meet the fresh water demand by using a reverse–osmosis desalination plant rather than ground water. The desalination plant will remove the high concentrations of salts and minerals from the Chesapeake Bay source water. The primary demand for fresh water will be makeup water for the ESWS. Fresh water will also be used for the potable water system, makeup to the demineralizer for the steam system, and fire protection. In Section 6.4.1 of the Technical Report, UniStar estimates that the desalination plant will have an output capacity of 1,764,000 gpd, of which approximately 1,169,000 gpd will be needed to meet the fresh water demand of Calvert Cliffs Unit 3. Thus, an additional capacity of 595,000 gpd will be available after the desalination plant comes on-line.

As described in Section 6.4.1 of the UniStar Technical Report, the desalination plant will operated as follows:

- The Chesapeake Bay water is run through a membrane filtration pretreatment, where 10 percent of the influent stream will be lost as reject;
- High pressures makeup water enters the reverse-osmosis trains, where the water passes through membranes, and the dissolved salts are rejected;
- Product water is collected from the end of each membrane element; and
- Reject water consisting of the highly concentrated brine is conveyed to the wastewater retention basin where it will be mixed with the cooling tower blowdown.

The desalination plant is expected to operate at a 40 percent recovery rate, which means that for every 100 gallons of Chesapeake Bay water introduced into the unit, 40 gallons of product water will be generated, and 60 gallons will be discharged as wastewater.

UniStar stated in the Technical Report that during a design basis accident, Chesapeake Bay water will provide safety-related makeup water for the four ESWS cooling towers.

The amount of surface water proposed for use in Calvert Cliffs Unit 3 is reasonable for two reasons:

- The assumptions described in Section 2.3.1 and Table 2.3-1 of the Revised Technical Report are reasonable for the water treatment and cooling operations associated with the plant; and
- The proposed amount of surface water required for cooling the steam cycle is consistent with closed cycle cooling conducted at similar facilities of similar size.

MDE WMA requests that UniStar and Calvert Cliffs Nuclear Power Plant, Inc., the owner of Units 1 and 2, consider using the fresh water generated in Unit 3 desalination plant to replace the ground water use from the Aquia. UniStar indicated in its response to DNR Data Request No. 6-7 a willingness to make excess water from the Unit 3 desalination plant available to Calvert Cliffs Nuclear Power Plant, Inc. The desalination plant has excess capacity of 595,000 gpd as described above. The benefit from the elimination of the Aquia withdrawal would be to mitigate long-term drawdown impacts to the aquifer.

6.1.4 *Water Needed for Emergency Backup*

UniStar informed PPRP that a backup supply of fresh water was needed to supply water during periods when the desalination plant was not operational; this was confirmed in UniStar's response to DNR Data Request No. 13-7. The response to the data request indicated that annual average daily and month of maximum use flow values of 263,520 gpd and 440,640 gpd, respectively, represent the expected water consumptive rates for normal plant operations and normal shutdown/cool down identified in Table 2.3-1 Rev.1 of their Revised Technical Report. UniStar indicated that potential situations that would require the use of ground water for replacement for desalination water include failure of desalination plant-related components which result in the inability to produce desalinated water for a period greater than 12 hours. UniStar expects that any interruption in desalination plant operation is expected to be relatively rare. Two 300,000 gallon water tanks will be dedicated to storing desalinated water, and will provide makeup for interruptions in desalination plant operations to a maximum of 12 hours (4 hours under shutdown conditions). UniStar requested that ground water be made available from the wells installed to support the construction of the plant to ensure sufficient water to continue plant operations for periods when the desalination plant is shutdown for more than 12 hours.

In subsequent correspondence to PPRP, UniStar increased the amount of ground water requested under the emergency supply condition, stating that the larger amount was needed to keep the plant operating, as

opposed to an orderly shutdown, in the event that the desalination plant is completely shutdown. The revised request for emergency supply is stated in UniStar's response to DNR Data Request No. 19-1, which indicated that the additional water was needed for the operation of the Essential Service Water System/Ultimate Heat Sink Makeup and Power Plant makeup. In particular, UniStar determined that NRC regulations require a minimum amount of water in the Ultimate Heat Sink basins dedicated for Design Basis Accident use (UniStar Response to DNR Data Request No. 18-1). At this time, UniStar is requesting 1,250,000 gpd for 15 days under this emergency ground water supply condition.

MDE WMA determined that there was not sufficient time available in the CPCN process to fully evaluate the reasonableness of this request and potential impacts to the Aquia aquifer and other users associated with a potential withdrawal of this magnitude. Therefore, MDE WMA recommends a condition to the CPCN requiring that UniStar conduct an analysis of alternatives to address the potential need for an emergency backup supply for the desalination plant. The alternatives analysis should consider additional intake locations, treatment equipment, and sources of water other than ground water for the non-potable emergency backup supply. MDE WMA also recommends that the analysis consider the relative suitability of different aquifers to minimize potential short-term impacts to other users. Additionally, MDE WMA may require UniStar to conduct field studies or water quality analysis to determine the suitability of the water resources, and to evaluate potential impacts to the resources or other users of the resource. Any appropriations request for ground water should be contained within the alternatives analysis.

The remainder of Section 6 is organized as follows:

- Section 6.2 describes the process by which Maryland appropriates surface and ground water;
- Section 6.3 presents the evaluation of the ground water withdrawal impacts associated with using the Aquia aquifer to supplement construction water withdrawals; and
- Section 6.4 discusses impacts to the Chesapeake Bay from a proposed withdrawal of surface water to support the operations of the plant.

6.2 MARYLAND'S APPROPRIATIONS REGULATIONS

The withdrawal of ground water and surface water to supply Calvert Cliffs Unit 3 requires a new appropriation issued by the Maryland PSC

through this CPCN proceeding. The State of Maryland has a statutory requirement to conserve and protect the water resources of the State and to control the appropriation and use of surface and ground water. Although the PSC is the actual permitting authority for the facility's water appropriations, MDE's statutes and regulations in COMAR 26.17.06, as administered by the WMA, are used to guide the State's decision regarding water appropriations.

Maryland water allocations are guided by the common law doctrine of reasonable use. This doctrine provides landowners the opportunity to make reasonable use of the water associated with their property, limited only by the rights of other landowners and the assurance that the use will not harm the water resources of the State. Additionally, the use of the water needs to be beneficial, which means that the use of water is: 1) necessary; 2) non-wasteful; 3) reasonably non-damaging to the resource and other users; and 4) in the best interest of the public.

COMAR 26.17.06.05A states that MDE WMA will grant an appropriation for a beneficial use if three conditions are met:

1. The requested appropriation is reasonable in relation to the anticipated level of use;
2. The requested appropriation does not have an unreasonable impact on the State's water resources and other users of the resource; and
3. The requested appropriation or use does not have an unreasonable impact on other users of the resource.

COMAR 26.17.06.05B provides criteria for determining reasonableness. Key criteria considered in the review of the use of ground water for construction include:

1. The extent and amount of harm to the aquifer and other users it may cause;
2. The practicality of adjusting the quantity of water used by a user to reduce impacts;
3. Aggregate changes and cumulative impact that this and future appropriations in an area may have on the waters of the State; and
4. The contribution that the proposed appropriation may make to future degradation of the waters of the State.

MDE WMA is tasked under COMAR 26.17.06.02 as the trustee for the State's water resources. The agency is authorized to control the appropriation of surface and ground water to provide for the greatest

possible use of the waters of the State, while protecting the water supply resources from mismanagement or overuse.

Construction dewatering is a permitted activity under COMAR 26.17.06.03 if dewatering, including intermittent periods of non-pumping, exceeds 30 calendar days, and the appropriation exceeds an annual average of 10,000 gpd. Calvert Cliffs Unit 3 will exceed both the time and extraction rate limits, and thus will need approval from the PSC to conduct dewatering activities. As discussed in Section 5.3, conditions, which are identical with those issued by MDE WMA for construction, are proffered to direct the dewatering.

6.3 GROUND WATER WITHDRAWAL IMPACTS

This section presents the evaluation of the ground water withdrawal impacts associated with using the Aquia aquifer to meet construction water demand.

6.3.1 Impacts to the Aquifer

COMAR 26.17.06.05.D(3) indicates that an appropriation of ground water cannot be issued if the proposed withdrawal will exceed the sustained yield of the aquifer. COMAR 26.17.06.05.D(4) provides the tool to determine whether the regional sustained yield potentiometric surface of a confined aquifer is being exceeded, by ensuring that the regional sustained yield potentiometric surface is not be lowered below 80 percent of the drawdown available between the top of the aquifer and the historical pre-pumping level of the potentiometric surface.

The method used to calculate the 80 percent management level for the Aquia aquifer at Calvert Cliffs is described below. Figure 6-2 illustrates the calculation of the 80 percent management level for the Aquia aquifer at Calvert Cliffs.

- The land surface elevation at well CA Ed 42 on the Units 1 and 2 site is approximately 122 feet msl, and the September 2007 water level in well CA Ed 42 at Calvert Cliffs is -90 feet msl.
- Drummond (2007) reported that the modeled historical pre-pumping water level elevation in the Aquia aquifer at Calvert Cliffs is 21 feet msl.

- The top of the Aquia aquifer is estimated to occur at -435 msl at Calvert Cliffs based on the geophysical log from wells CA Ed 22 and 45 (Achmad and Hansen, 1997).
- The difference between the top of the Aquia aquifer and the historic, pre-pumping water level is 456 feet (435 feet plus 21 feet).
- Eighty percent of 456 feet is 365 feet; subtracting 365 feet from 21 feet msl results in an 80 percent management level of -344 feet msl.
- Remaining available drawdown is the difference between the current water level of -90 feet msl and the 80 percent management level of -344 feet msl, which leaves 254 feet of remaining available drawdown.

The value of -344 feet for the 80 percent management value is consistent with the values shown on Figure 45 in the Maryland Geological Survey Report of Investigations No. 76 (Drummond, 2007).

Figure 6-2 Available Drawdown in the Aquia Aquifer at Well CAEd42 at Calvert Cliffs

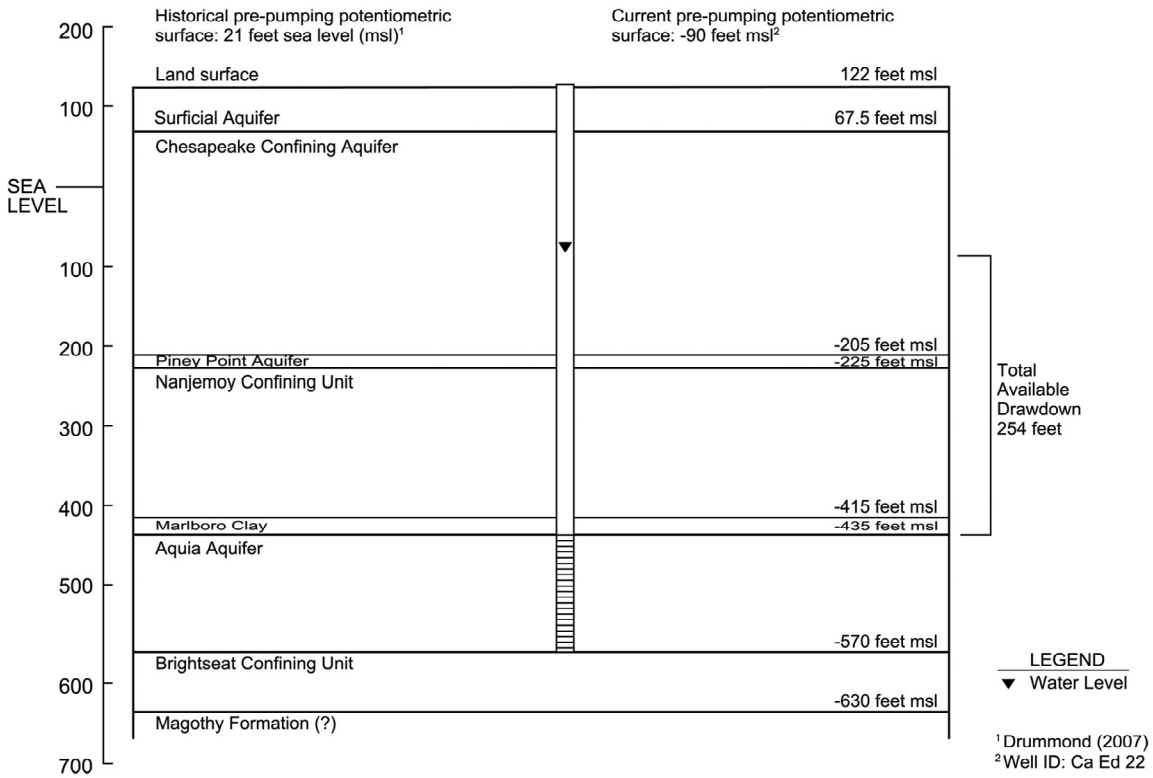

The level of the potentiometric surface within the Aquia aquifer was calculated using the Theis modified non-equilibrium equation (Theis, 1935). to evaluate the long-term regional impact of the proposed

withdrawal on the aquifer and other users. The Theis equation is for non-steady flow in a homogenous, isotropic, confined aquifer with a single production well, and is based on the assumptions that 1) no recharge is provided during the period of withdrawal, and 2) the aquifer boundaries are infinite. These assumptions provide a conservative estimate of drawdown for two reasons.

1. Drawdown calculations from a single pumping well provide maximum estimated drawdown values; in actuality ground water would be withdrawn from a well field that consists of three or more wells.
2. The Theis equation provides a conservative calculation of drawdown in that it does not assume any recharge to the aquifer, and assumes that the aquifer boundaries are infinite.

Even with the conservatism, the Theis equation is an appropriate method to determine long-term drawdown because the Aquia aquifer is confined and somewhat homogenous in makeup at Calvert Cliffs. In addition, the distance to the aquifer boundary in the up slope outcrop area is over 40 miles west of the site and down slope the aquifer undergoes a facies change to finer grained sediments 10 miles southeast of the site (Drummond, 2007). These distances to the aquifer boundaries are too great to impact the drawdown analysis in any meaningful way.

The following equation (Theis, 1935) is used to calculate drawdown at selected time intervals:

$$s = \frac{QW(u)}{4\pi T} \quad (1)$$

where:

s = drawdown at time t;

S = storativity;

T = transmissivity; and

Q = well discharge rate.

W(u) = the well function; an exponential integral that can be expanded as an infinite series approximation as:

$$W(u) = -0.5772 - \ln(u) + u - \frac{u}{3*3!} + \frac{u}{4*4!} - \frac{u}{5*5!} + \ldots \quad (2)$$

where u is defined as:

$$u = \frac{r^2 S}{4Tt} \quad (3)$$

and:

r = distance in feet from the center of the pumped well to a point where the drawdown is measured.

The properties of the Aquia aquifer used in this analysis are as follows:

- Transmissivity – 935 feet squared per day (ft^2/d); and
- Storativity – 1.0×10^{-4} (unitless).

These values were obtained from literature values in Achmad and Hansen (1997). The transmissivity value was calculated from a pumping test conducted in a well installed at Calvert Cliffs. The storativity of an aquifer represents the volume of water that an aquifer releases from storage per unit surface area of the aquifer per unit decline in hydraulic head (e.g., for a one-foot water level decline over one square foot of aquifer area, a release of 0.05 cubic feet of water would result in a storativity value of 0.05). The storativity is consistent with the value used by Achmad and Hansen (1997) to model the Aquia in southern Maryland.

Using the values for transmissivity and storativity listed above, drawdowns in the Aquia aquifer at various distances for year eight at the annual average rate of 160,000 gpd were calculated using the Theis method. The 160,000 gpd withdrawal includes the 100,000 gpd being considered for the new wells installed to support the construction of Unit 3 and 60,000 gpd currently available on the existing ground water appropriation at Calvert Cliffs. For conservatism, the impact analysis assumes that the 60,000 gpd that remains on the appropriations permit for Units 1 and 2 is used. The new 160,000 gpd demand is assumed to be withdrawn from a hypothetical central well located 1/2 mile from the existing wells at Calvert Cliffs Units 1 and 2. Table 6-3 lists the results of the drawdown analysis.

Table 6-3 Aquia Aquifer Calculated Drawdown for 8 Years at the Proposed Withdrawal Rate of 160,000 gpd

Distance from Pumping Well (feet)	Distance from Pumping Well (miles)	Theis Calculated Drawdown (feet)	Theis Calculated Drawdown Plus 16 foot Regional Rate of Decline (feet)
50		31.0	47.0
100		28.5	44.5
200		25.9	41.9
500		22.6	38.6
1,320	0.25	19.1	35.1
2,640	0.5	16.5	32.5
5,280	1.0	14.0	30.0
7,920	1.5	12.5	28.5
10,560	2.0	11.5	27.5
15,840	3.0	10.0	26.0
18,480	3.5	9.4	25.4
26,400	5.0	8.2	24.2
52,800	10.0	5.7	21.7

Based on the Theis analysis, drawdowns in the area of the withdrawal are as follows:

- **One-half mile**. The calculated drawdown after eight years at an estimated distance of one-half mile is 16.5 feet; this is about 6.5 percent of the available drawdown of 254 feet at this point. One-half mile would be the approximate distance to the existing Aquia production wells at Calvert Cliffs.
- **One mile**. The calculated drawdown after eight years at an estimated distance of one mile is 14.0 feet; this is about 5.5 percent of the available drawdown of 254 feet at this point. It is approximately one mile to the property boundary.

In addition, an estimate of the regional rate of decline was determined to evaluate cumulative impacts associated with the new 160,000 gpd withdrawal on the Aquia aquifer and other users. Based on the long-term decline in the water level measured in well CA Fd 54 at Calvert Cliffs State Park (see Figure 3-3), the regional rate of decline in the Aquia aquifer water level over the past ten years is estimated to be about 2 feet/year. Thus after eight years, there will be 16 additional feet of drawdown due to the regional rate of decline in the aquifer. The last column in Table 6-3 is the sum of the total cumulative effect of the new withdrawal of 100,000 gpd at Calvert Cliffs plus the 16 feet of additional drawdown that will be realized after eight years due to the regional rate of decline. The calculated drawdown associated with the 160,000 gpd withdrawal

combined with the 16 additional feet of regional drawdown could create a total drawdown of 30.0 feet after eight years at one mile from the hypothetical pumping well, with represents 12 percent of the available drawdown of 254 feet.

The calculated drawdown at the property boundary is small, especially when compared to the 254 feet of available drawdown in the Aquia at Calvert Cliffs. Further, the drawdown in the Aquia will not cause an unreasonable impact to the aquifer for the limited eight year period of construction for Unit 3.

6.3.2 *Impacts to Other Users*

The Aquia aquifer is widely used for water supply in southern Maryland, and in Calvert County in particular. As described in Section 3.1, pumping wells in the Aquia aquifer are located in the area surrounding the power plant. MDE WMA reports that there are 186 separate ground water appropriations in the Aquia in Calvert County. The four closest users in the Aquia aquifer identified in either MGS publications or from MDE WMA permit records are as follows:

- Southern Middle School located on HG Trueman Road, about 1.5 miles south of the intersection of Calvert Cliffs Parkway, uses a small amount of water from the Aquia. This well is 1.5 miles from the Unit 3 site;
- The Rodney Getz Saw Mill, located on Saw Mill Road about 0.5 miles north of the intersection of Calvert Cliffs Parkway, uses the Aquia aquifer. The well at the saw mill is 2.0 miles from the Unit 3 site;
- Beaches Water Company, Inc. Beaches Water Company operates two production wells located in the community of Long Beach, which is approximately 3.0 miles north of Calvert Cliffs. As of 2002, the Beaches Water Company had a ground water appropriation of 49,000 gpd and withdrew an average of 39,000 gpd in 2002; and
- Dominion Cove Point LNG, located about 3.5 miles south of Calvert Cliffs. As of 2002, Dominion had a ground water appropriation with an annual average of 29,000 gpd and withdrew an average of 23,000 gpd in 2002.

As shown in Table 6-3, calculated drawdown after eight years at a withdrawal rate of 160,000 gpd at these four locations, including the additional 16 feet of drawdown to account for the regional rate of water level decline, are as follows:

- 28.5 at Southern Middle School;
- 27.5 at the saw mill;
- 26.0 feet at Long Beach; and
- 25.4 feet at Dominion.

These calculated drawdown amounts are small, especially when compared to the 254 feet of available drawdown in the Aquia at Calvert Cliffs. Further, the drawdown in the Aquia will not cause an unreasonable impact to the nearby users for the limited eight year period of construction for Unit 3.

The potential for short-term withdrawal impacts to other users associated with the drawdown caused by the month of maximum use withdrawal of 240,000 gpd for a 60-day period was also evaluated using the Theis method (180,000 gpd from the new appropriation and 60,000 gpd from Units 1 and 2). Worst-case impacts from the month of maximum use withdrawal would occur at the end of year eight, and are calculated by running a Theis simulation for 80,000 gpd for 60 days and adding these results to the drawdown values for the 160,000 gpd withdrawal listed in Table 6-3 (including the 16 feet to account for the regional rate of decline). The simulation at 80,000 gpd represents the incremental increase in pumping during the month of maximum use. Table 6-4 lists the results of the drawdown analysis.

Table 6-4 Aquia Aquifer Calculated Drawdown for 60 Days at the Proposed Withdrawal Rate of 80,000 gpd

Distance from Pumping Well (feet)	Distance from Pumping Well (miles)	Theis Calculated Drawdown Plus 16 foot Regional Rate of Decline at Year 8 (feet)	Theis Calculated Drawdown for 80,000 gpd for 60 Days	Total of All Theis Calculated Drawdowns
50		47.0	12.0	59.0
100		44.5	10.7	55.2
200		41.9	9.4	51.3
500		38.6	7.8	46.4
1,320	0.25	35.1	6.0	41.1
2,640	0.5	32.5	4.7	37.2
5,280	1.0	30.0	3.5	33.5
7,920	1.5	28.5	2.8	31.3
10,560	2.0	27.5	2.3	29.8
15,840	3.0	26.0	1.6	27.6
18,480	3.5	25.4	1.3	26.7
26,400	5.0	24.2	0.8	25.0
52,800	10.0	21.7	0.1	21.8

As shown in Table 6-4, calculated drawdown after 60 days at a withdrawal rate of 80,000 gpd, combined with the calculated drawdown after eight years with the 16 additional feet at a withdrawal rate of 160,000 gpd associated with the regional rate of decline, at the four off-site Aquia users are as follows:

- 31.3 at Southern Middle School;
- 29.8 at the saw mill;
- 27.6 feet at Long Beach; and
- 26.7 feet at Dominion.

These calculated drawdown amounts at these locations are small, especially when compared to the 254 feet of available drawdown in the Aquia at Calvert Cliffs. Further, the drawdown in the Aquia will not cause an unreasonable impact to the nearby users for the limited eight year period of construction for Unit 3.

6.3.3 Recommendations Relative to Ground Water Use for Construction

MDE WMA recommends that UniStar be granted an appropriation to use ground water from the Aquia aquifer for eight years to support the

construction of Unit 3. The appropriation is recommended to be granted with the following amounts:

- **Average Daily Use**. The annual average water requirement is 100,000 gpd from the Aquia aquifer; and

- **Month of Maximum Use**. The maximum daily water use is 180,000 gpd from the Aquia aquifer for the month of maximum use.

The new appropriation is expected to provide UniStar with a sufficient amount of water to meet its demand during construction years 2 through 6. However, MDE WMA further recommends that UniStar pursue use of other sources of water, including water generated during construction dewatering and treated effluent hauled from local wastewater treatment plants (with the appropriate MDE approval), to augment the ground water withdrawals during the construction period. If the availability of treated effluent or on-site conditions limit the use of treated effluent, then UniStar should pursue other off-site water sources with available capacity within their permitted limits. After six and half years, the desalination plant will be brought on-line, and all use of ground water for construction will cease (with the exception of ground water used as the emergency backup supply discussed in Section 6.1.4).

MDE MWA has provided a recommended license condition that indicates that the Aquia aquifer withdrawal can be obtained from two new wells. At least two wells likely will be necessary to provide sufficient ground water to meet the construction water demand during the month of maximum use. UniStar should inform MDE WMA of the final number of wells to be installed and the final locations of the wells prior to use.

Ground water in Southern Maryland and Calvert County in particular, is significantly more limited in comparison to quantities available from the Chesapeake Bay. Ground water supplies are ideally suited for potable use, being free from pathogens and salts present in brackish waters. Opportunities to convert existing non-potable ground water uses to water reuse or a brackish water source should be sought and taken advantage of. Such a condition is present with respect to the new reverse osmosis water plant and system being developed for Unit 3. UniStar has indicated a willingness to provide excess treated water from its proposed withdrawal from the Chesapeake Bay to Calvert Cliffs Nuclear Power Units 1 and 2. Additionally, UniStar indicated that the desalination plant will have available 0.6 million gallons per day above the 1.17 million gallon per day demand for Unit 3. The ground water use for Units 1 and 2 is the fourth largest permitted use from the Aquia aquifer in Calvert

County. Cessation or a significant reduction of water withdrawals from the Aquia aquifer at Units 1 and 2 will allow water levels to rebound in the general area of Calvert Cliffs and thereby benefit other users of ground water.

Therefore MDE WMA recommends that UniStar ensure that the desalination treatment system installed at Unit 3 has at least the capacity indicated in Table 2.3-1 Rev. 1 of the August 8, 2008 Revised Technical Report and make available water in excess of the requirements for Unit 3 for use by Calvert Cliffs Nuclear Power Plant Units 1 and 2. In addition, MDE WMA recommends that UniStar enter into an agreement with Calvert Cliffs Nuclear Power Plant, Inc. to transfer water from the reverse osmosis plant to meet these water needs. MDE WMA understands that for the reasons provided in UniStar's response to DNR Data Request No. 13-8, that Unit 3 will require additional water from the desalination plant that will prevent the complete replacement of ground water use at Units 1 and 2. However, as indicated in UniStar's response to the referenced data request, such interruptions in desalination plant operation are expected to be relatively rare.

6.4 CHESAPEAKE BAY WITHDRAWAL

UniStar requested a surface water appropriation of: 1) a daily average of 63.0 mgd on a yearly basis; and 2) a maximum daily withdrawal of 72.0 mgd. MDE concurs with the requested surface water appropriation. The requested amount is reasonable and will not have any impact on the ability of others to utilize the water supply resources of the Chesapeake Bay. Approximately 50 percent of the water withdrawn, or about 32 mgd, will be consumptively lost in the cooling tower and therefore not returned to the Bay.

The average water withdrawal of 63.0 mgd would make Calvert Cliffs Unit 3 the largest power plant user of water in Maryland, among those plants that utilize closed-cycle cooling systems. Around the state, there are seven generating stations with once-through cooling systems, on both tidal and non-tidal surface water bodies, that withdraw much more water than UniStar is requesting. However, the consumptive loss of 29 mgd at Calvert Cliffs Unit 3 would be the largest consumptive use of any Maryland power plant.

UniStar's requested surface water appropriation for Unit 3 is a small percentage of the existing 3,500 mgd daily appropriation issued to Calvert Cliffs Nuclear Power Plant, Inc. to withdraw Chesapeake Bay water for

cooling Units 1 and 2. In 2006, Calvert Cliffs Nuclear Power Plant, Inc. withdrew a daily average of 3,235 mgd for once-through cooling water at Units 1 and 2. About 0.6 percent of that cooling water demand, or 18 mgd in 2006, was lost to evaporation in the estuary after discharge, according to estimates by the Interstate Commission on the Potomac River Basin (ICPRB, 1986). These estimated amounts of consumptive use, in the context of a large estuary such as the Chesapeake Bay, represent a negligible impact to water resources.

The requested amount of water withdrawn from the Chesapeake Bay will not adversely impact the recreational use of the river or aquatic life. Therefore, MDE WMA recommends that UniStar be granted an appropriation to use surface water from the Chesapeake Bay. It is recommended that the appropriation be for 12 years from the date that the CPCN is issued consistent with the standard conditions issued by MDE WMA for surface water appropriations. However, MDE WMA recommends that the initiation of withdrawal period be extended from the normal two years to seven years to reflect the anticipated construction schedule and necessary review and approval of the project provided by the NRC.