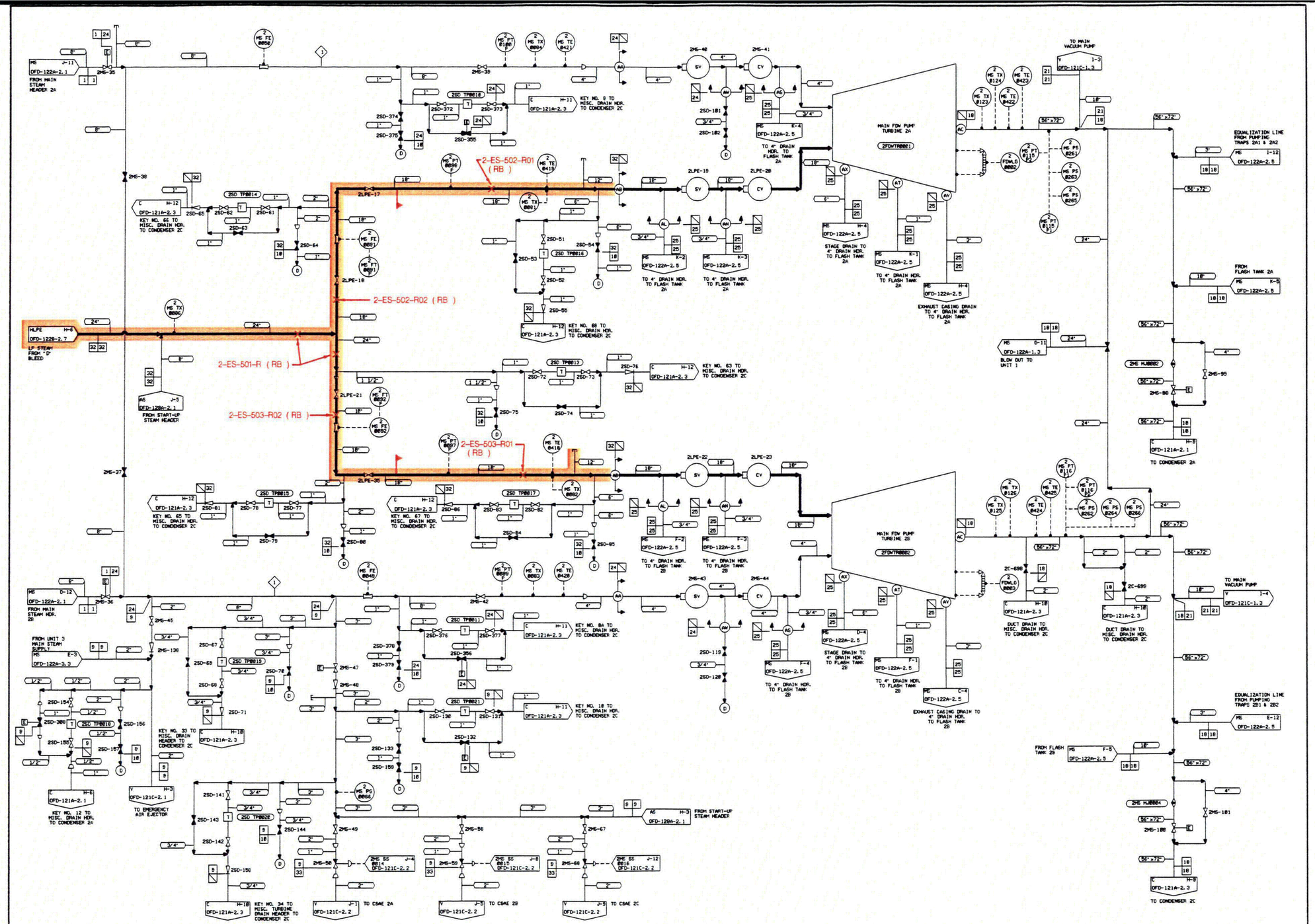

LEGEND

- High Energy Piping (Unit 1)
- High Energy Piping (Unit 2)
- High Energy Piping (Unit 3)
- X – High Energy Line Break Location
- N-SYS-NNN (-N) – Break Number
- TE – Terminal End (Break)
- RB – Running Break
- CR – Critical Crack
- IB – Intermediate Break
- Running Break Boundary

FIGURE 5.1–3
EXTRACTION STEAM SYSTEM

High Energy Lines, Piping Configurations, Boundaries, Break Locations and Numbers

(Sheet 1 of 9)

UNIT 2

THIS DIAGRAM IS FOR HIGH ENERGY LINE BREAK PURPOSES ONLY.
REFERENCE FLOW DIAGRAM OFD–122A–2.3 FOR COMPLETE SYSTEM DESIGN INFORMATION.

HELB–122A–02–03

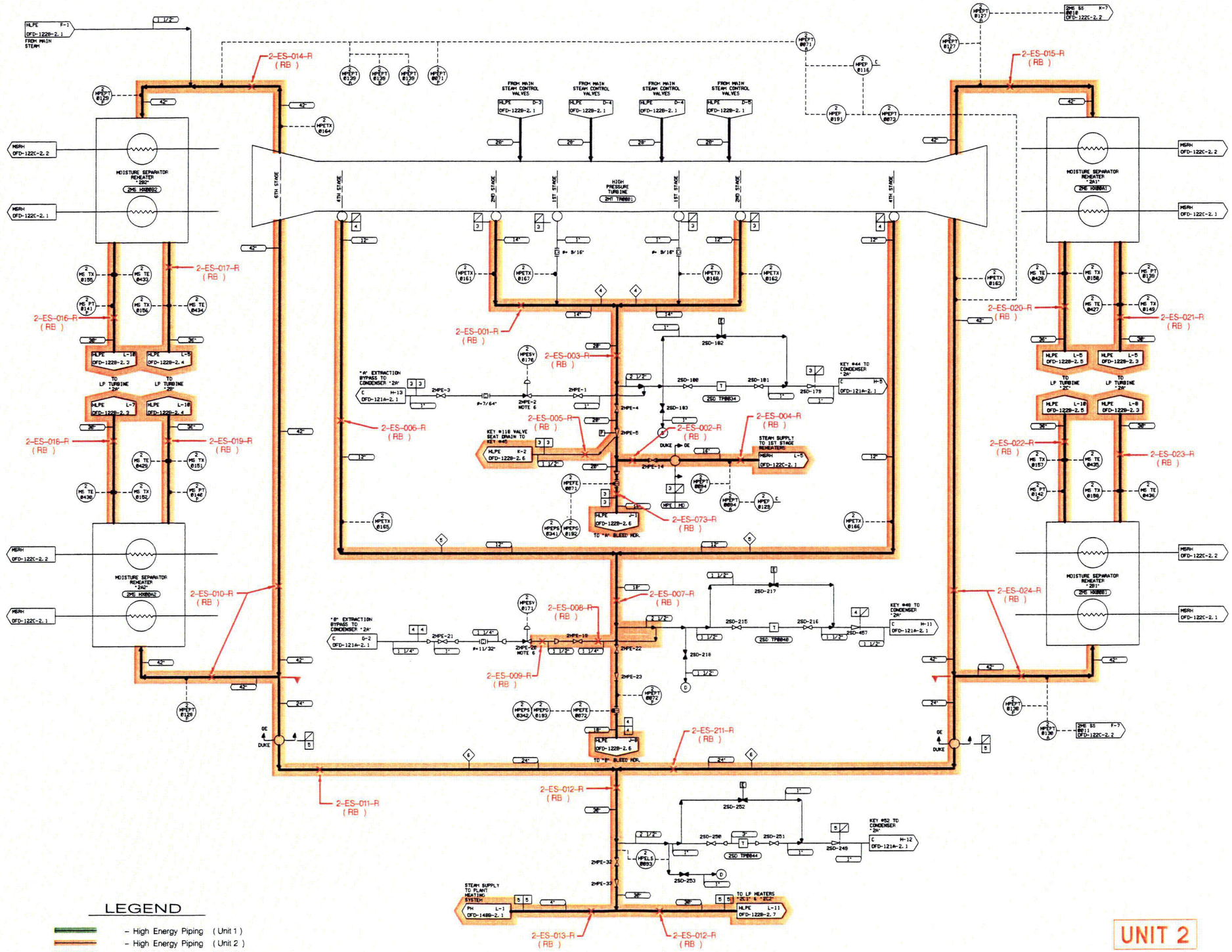

LEGEND

- High Energy Piping (Unit 1)
- High Energy Piping (Unit 2)
- High Energy Piping (Unit 3)
- X – High Energy Line Break Location
- N-SYS-NNN (-N) – Break Number
- TE – Terminal End (Break)
- RB – Running Break
- CR – Critical Crack
- IB – Intermediate Break
- Running Break Boundary

FIGURE 5.1-3
EXTRACTION STEAM SYSTEM

High Energy Lines, Piping Configurations, Boundaries, Break Locations and Numbers

(Sheet 2 of 9)

UNIT 2

THIS DIAGRAM IS FOR HIGH ENERGY LINE BREAK PURPOSES ONLY.
REFERENCE FLOW DIAGRAM OFD-122B-2.2 FOR COMPLETE SYSTEM DESIGN INFORMATION.

HELB-122B-02-02

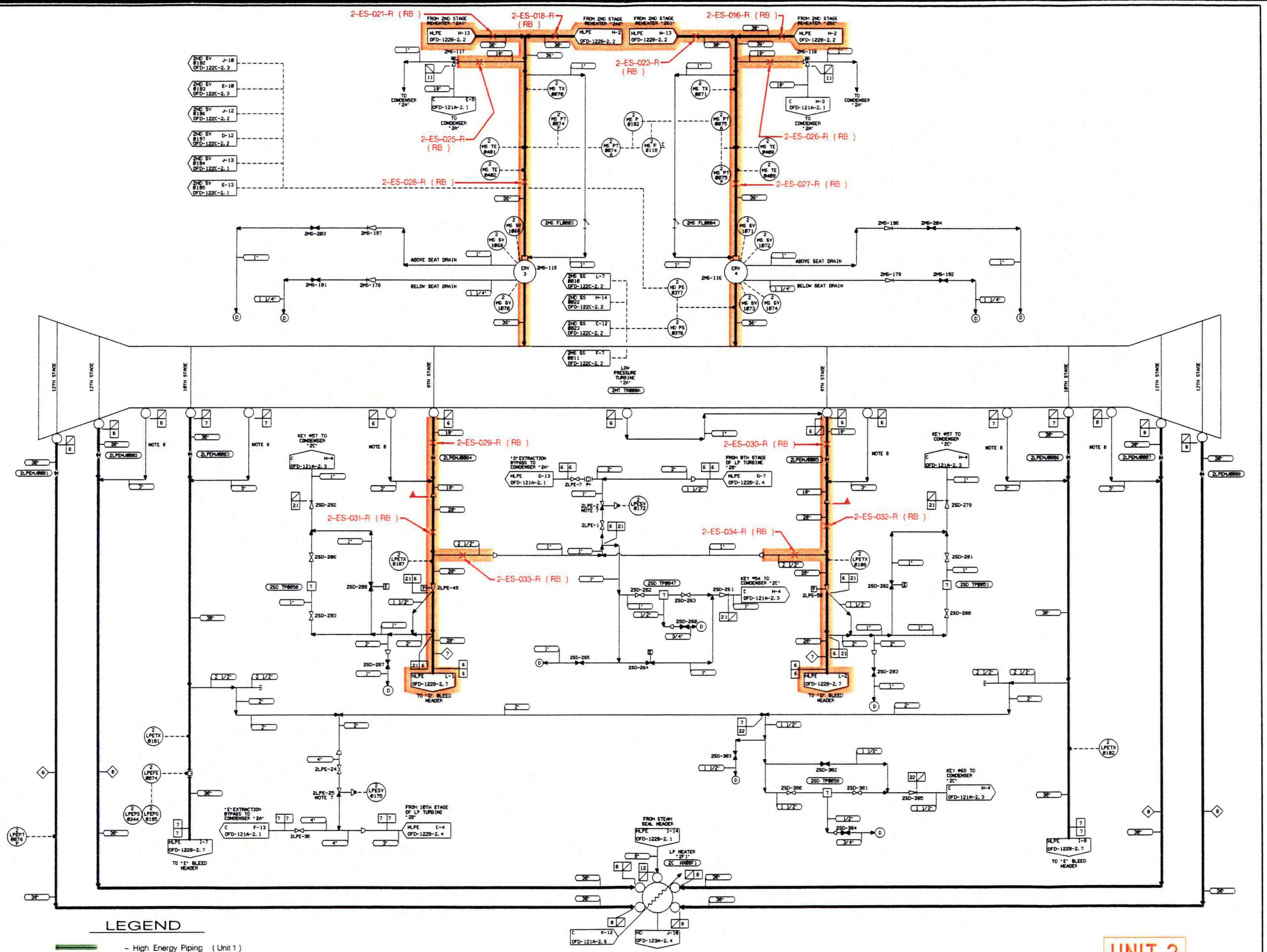

LEGEND

- High Energy Piping (Unit 1)
- High Energy Piping (Unit 2)
- High Energy Piping (Unit 3)
- X – High Energy Line Break Location
- N-SYS-NNN (-N) – Break Number
- TE – Terminal End (Break)
- RB – Running Break
- CR – Critical Crack
- IB – Intermediate Break
- Running Break Boundary

FIGURE 5.1-3
EXTRACTION STEAM SYSTEM

High Energy Lines, Piping Configurations, Boundaries, Break Locations and Numbers

(Sheet 3 of 9)

UNIT 2

THIS DIAGRAM IS FOR HIGH ENERGY LINE BREAK PURPOSES ONLY.
REFERENCE FLOW DIAGRAM OFD-122B-2.3 FOR COMPLETE SYSTEM DESIGN INFORMATION.

HELB-122B-02-03

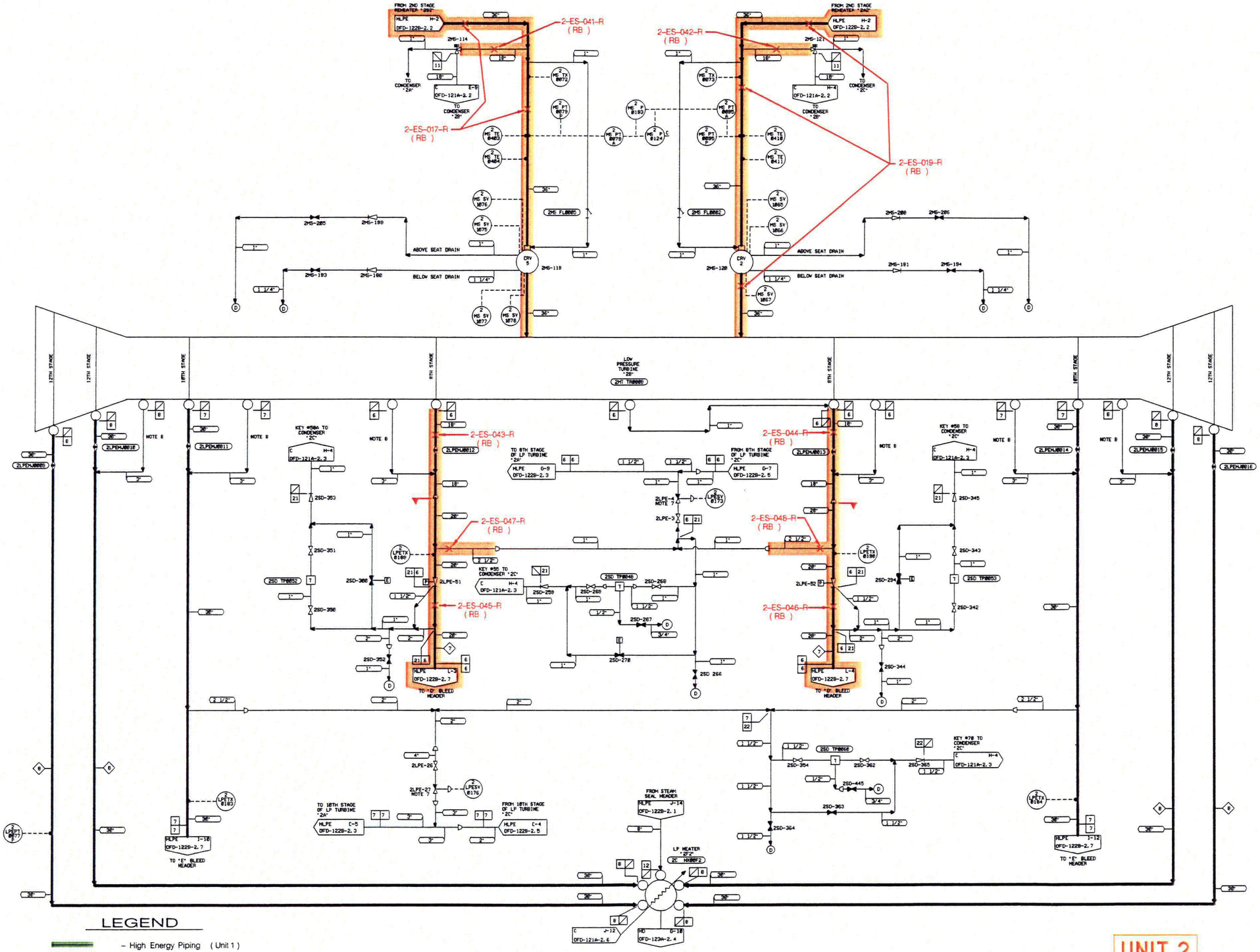

LEGEND

- High Energy Piping (Unit 1)
- High Energy Piping (Unit 2)
- High Energy Piping (Unit 3)
- X – High Energy Line Break Location
- N-SYS-NNN (-N) – Break Number
- TE – Terminal End (Break)
- RB – Running Break
- CR – Critical Crack
- IB – Intermediate Break
- Running Break Boundary

FIGURE 5.1-3
EXTRACTION STEAM SYSTEM

High Energy Lines, Piping Configurations, Boundaries, Break Locations and Numbers
(Sheet 4 of 9)

UNIT 2

THIS DIAGRAM IS FOR HIGH ENERGY LINE BREAK PURPOSES ONLY.
REFERENCE FLOW DIAGRAM OFD-122B-2.4 FOR COMPLETE SYSTEM DESIGN INFORMATION.

HELB-122B-02-04

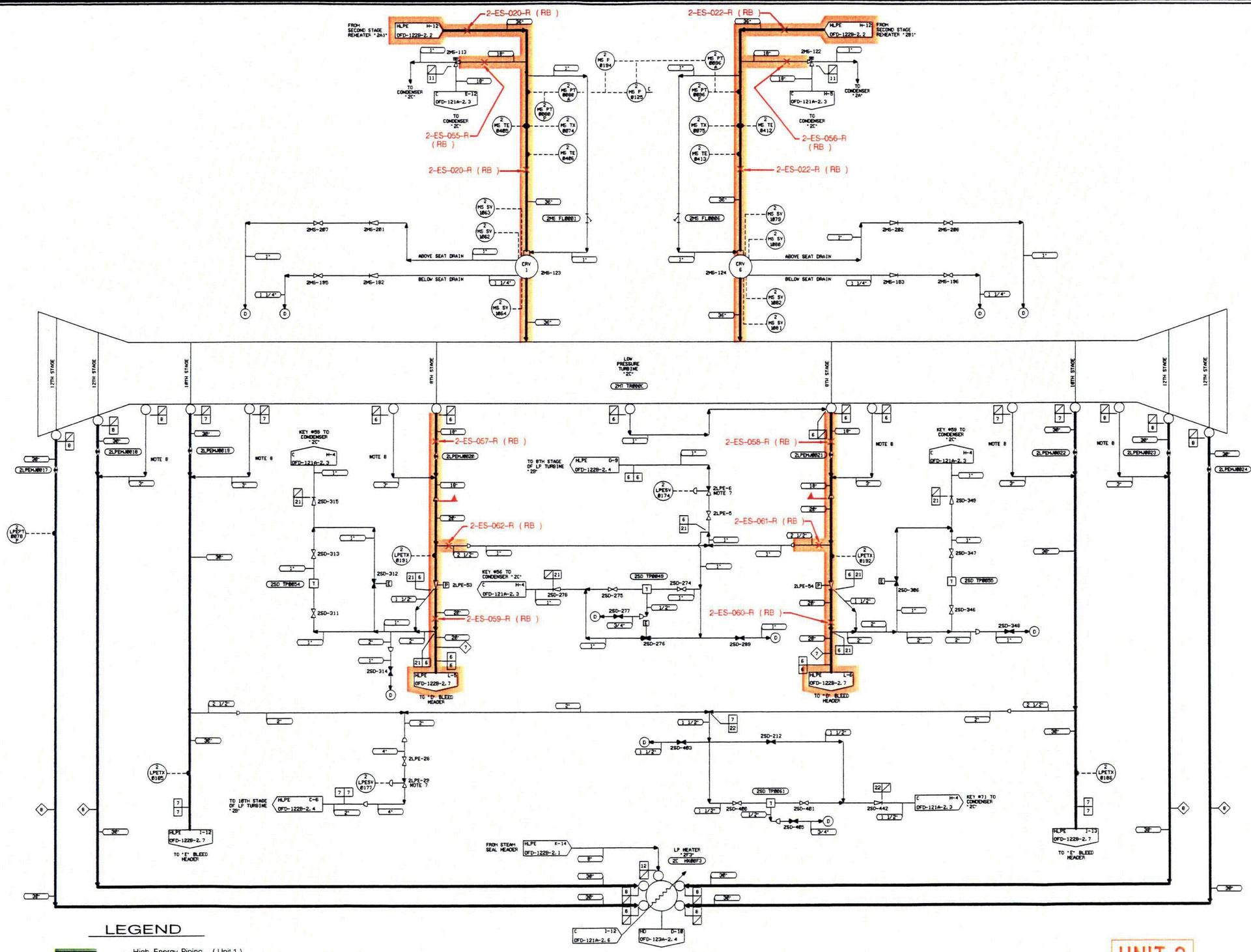

LEGEND

- High Energy Piping (Unit 1)
- High Energy Piping (Unit 2)
- High Energy Piping (Unit 3)
- X – High Energy Line Break Location
- N-SYS-NNN (-N) – Break Number
- TE – Terminal End (Break)
- RB – Running Break
- CR – Critical Crack
- IB – Intermediate Break
- Running Break Boundary

FIGURE 5.1–3
EXTRACTION STEAM SYSTEM

High Energy Lines, Piping Configurations, Boundaries, Break Locations and Numbers

(Sheet 5 of 9)

UNIT 2

THIS DIAGRAM IS FOR HIGH ENERGY LINE BREAK PURPOSES ONLY.
REFERENCE FLOW DIAGRAM OFD-122B-2.5 FOR COMPLETE SYSTEM DESIGN INFORMATION.

HELB–122B–02–05

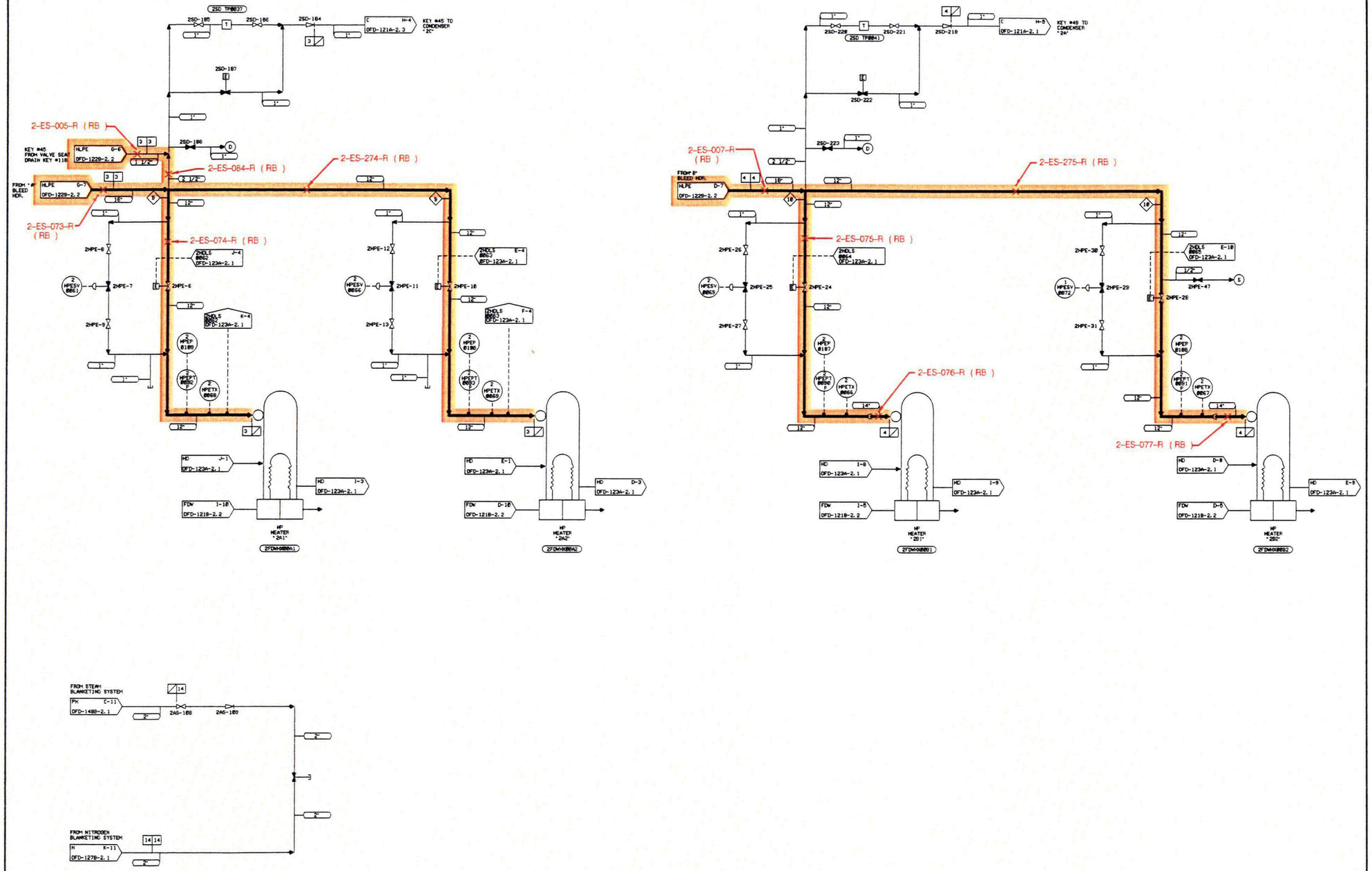

LEGEND

- High Energy Piping (Unit 1)
- High Energy Piping (Unit 2)
- High Energy Piping (Unit 3)
- X – High Energy Line Break Location
- N-SYS-NNN (-N) – Break Number
- TE – Terminal End (Break)
- RB – Running Break
- CR – Critical Crack
- IB – Intermediate Break
- Running Break Boundary

FIGURE 5.1-3
EXTRACTION STEAM SYSTEM

High Energy Lines, Piping Configurations, Boundaries, Break Locations and Numbers

(Sheet 6 of 9)

UNIT 2

THIS DIAGRAM IS FOR HIGH ENERGY LINE BREAK PURPOSES ONLY.
REFERENCE FLOW DIAGRAM OFD-122B-2.6 FOR COMPLETE SYSTEM DESIGN INFORMATION.

HELB-122B-02-06

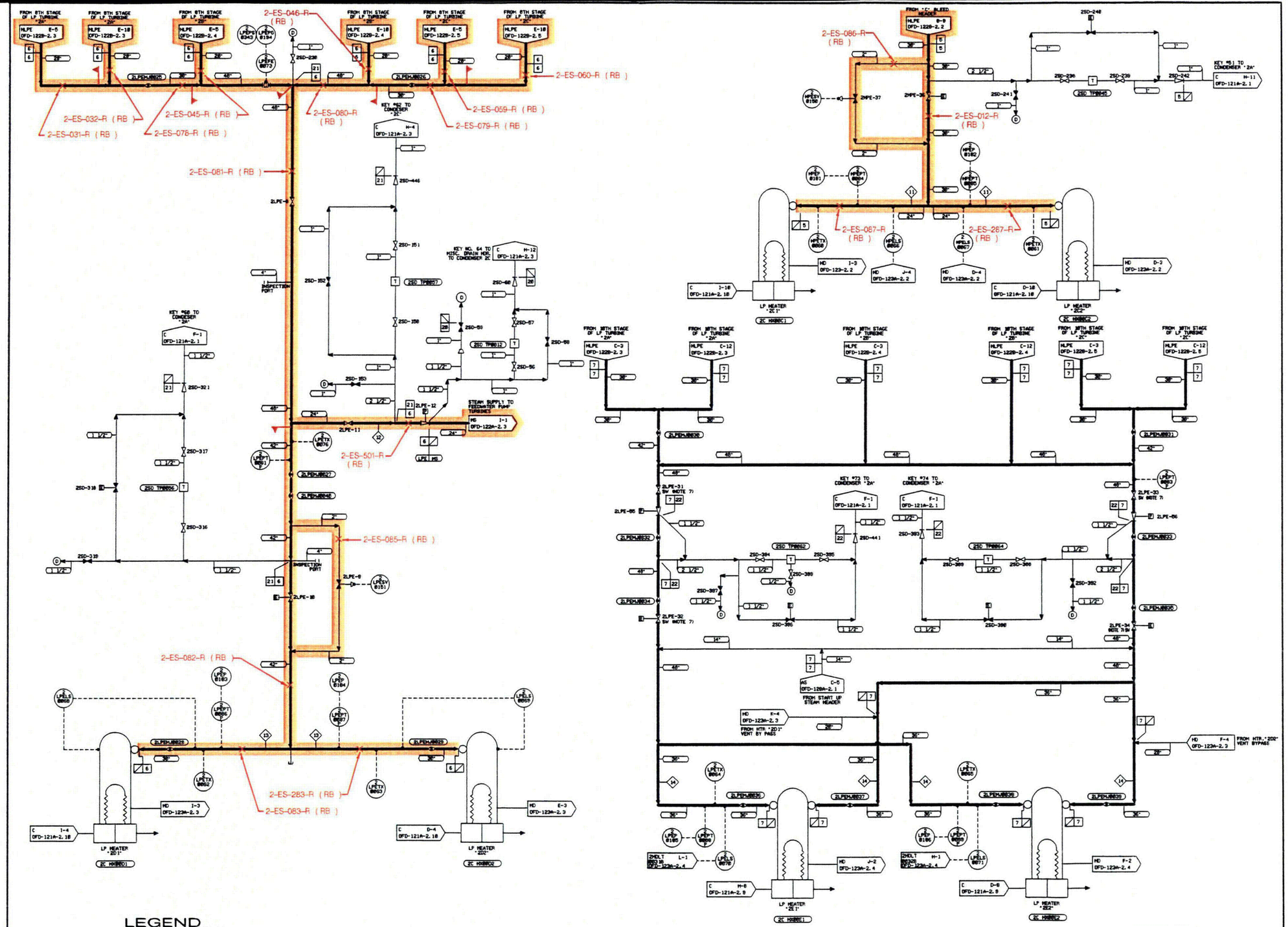

LEGEND

- High Energy Piping (Unit 1)
- High Energy Piping (Unit 2)
- High Energy Piping (Unit 3)
- X – High Energy Line Break Location
- N-SYS-NNN (-N) – Break Number
- TE – Terminal End (Break)
- RB – Running Break
- CR – Critical Crack
- IB – Intermediate Break
- Running Break Boundary

FIGURE 5.1–3
EXTRACTION STEAM SYSTEM

High Energy Lines, Piping Configurations, Boundaries, Break Locations and Numbers
(Sheet 7 of 9)

UNIT 2

THIS DIAGRAM IS FOR HIGH ENERGY LINE BREAK PURPOSES ONLY.
REFERENCE FLOW DIAGRAM OFD-122B-2.7 FOR COMPLETE SYSTEM DESIGN INFORMATION.

HELB–122B–02–07

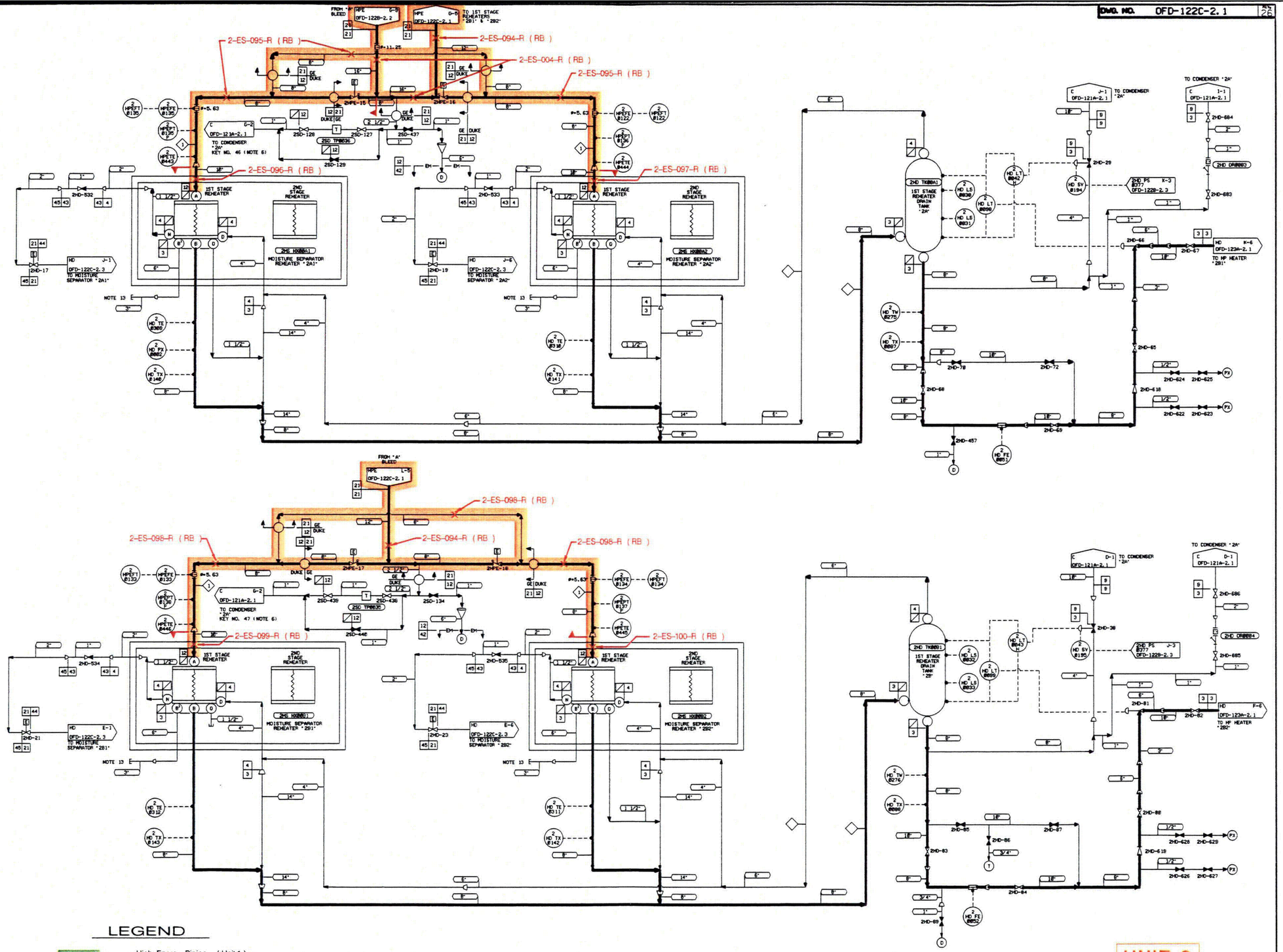

LEGEND

- High Energy Piping (Unit 1)
- High Energy Piping (Unit 2)
- High Energy Piping (Unit 3)
- X – High Energy Line Break Location
- N-SYS-NNN (-N) – Break Number
- TE – Terminal End (Break)
- RB – Running Break
- CR – Critical Crack
- IB – Intermediate Break
- Running Break Boundary

FIGURE 5.1-3
EXTRACTION STEAM SYSTEM

High Energy Lines, Piping Configurations, Boundaries, Break Locations and Numbers

(Sheet 8 of 9)

UNIT 2

THIS DIAGRAM IS FOR HIGH ENERGY LINE BREAK PURPOSES ONLY.
REFERENCE FLOW DIAGRAM OFD-122C-2.1 FOR COMPLETE SYSTEM DESIGN INFORMATION.

HELB-122C-02-01

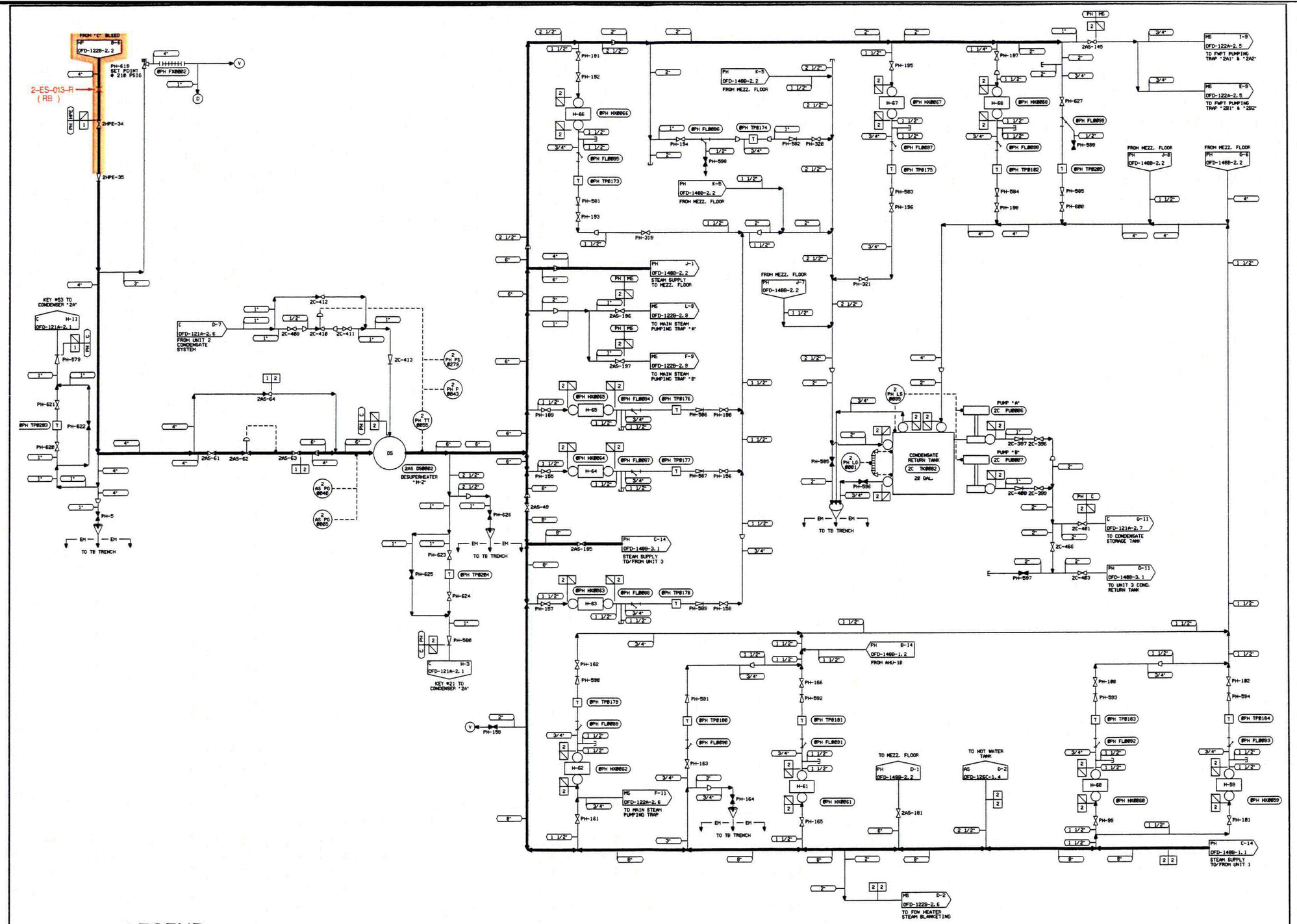

LEGEND

- High Energy Piping (Unit 1)
- High Energy Piping (Unit 2)
- High Energy Piping (Unit 3)
- X – High Energy Line Break Location
- N-SYS-NNN (-N) – Break Number
- TE – Terminal End (Break)
- RB – Running Break
- CR – Critical Crack
- IB – Intermediate Break
- Running Break Boundary

FIGURE 5.1-3
EXTRACTION STEAM SYSTEM

High Energy Lines, Piping Configurations, Boundaries, Break Locations and Numbers

(Sheet 9 of 9)

UNIT 2

THIS DIAGRAM IS FOR HIGH ENERGY LINE BREAK PURPOSES ONLY.
REFERENCE FLOW DIAGRAM OFD-148B-2.1 FOR COMPLETE SYSTEM DESIGN INFORMATION.

HELB-148B-02-01

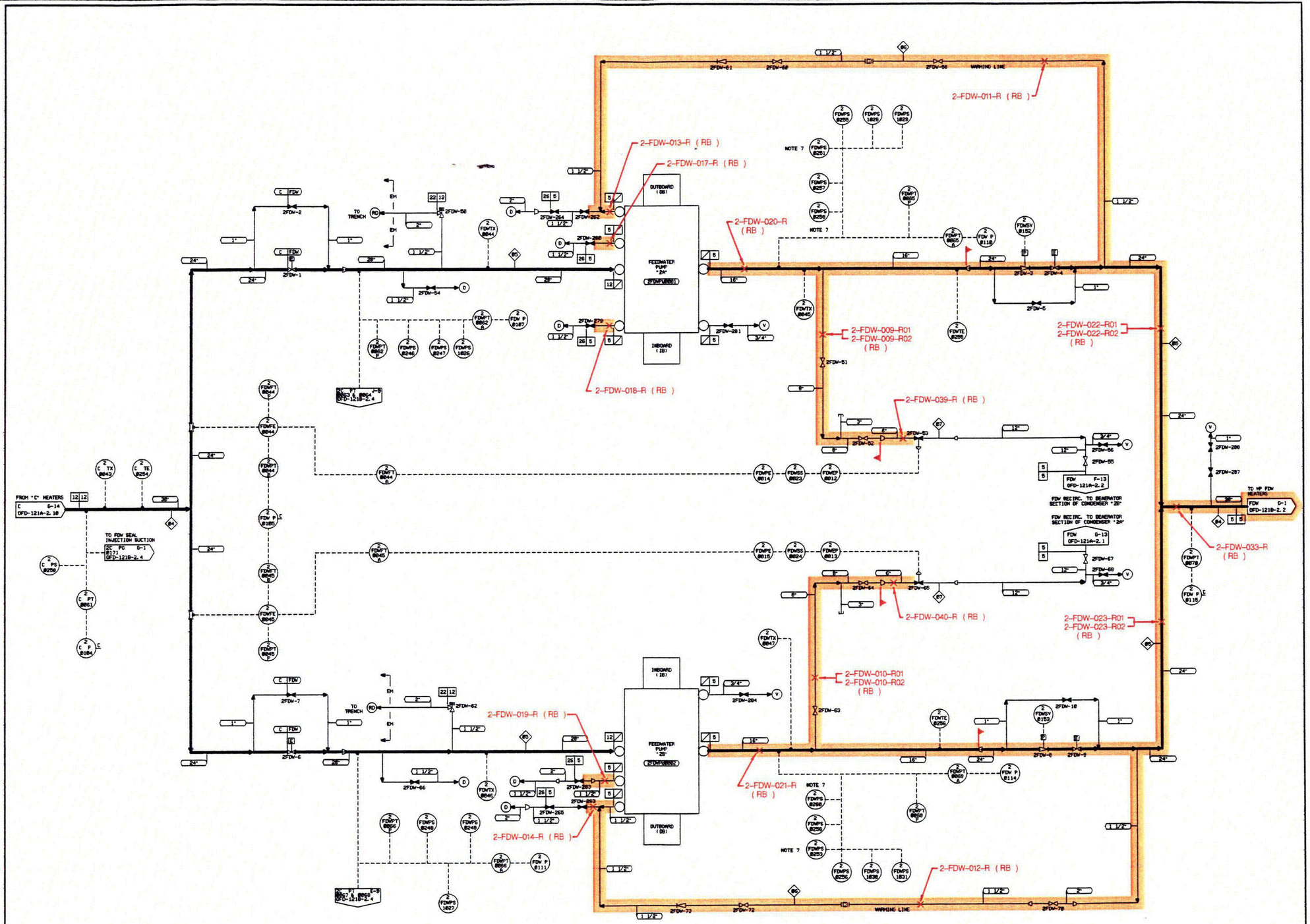

LEGEND

- High Energy Piping (Unit 1)
- High Energy Piping (Unit 2)
- High Energy Piping (Unit 3)
- X – High Energy Line Break Location
- N-SYS-NNN (-N) – Break Number
- TE – Terminal End (Break)
- RB – Running Break
- CR – Critical Crack
- IB – Intermediate Break
- Running Break Boundary

FIGURE 5.1–4
MAIN FEEDWATER SYSTEM

High Energy Lines, Piping Configurations, Boundaries, Break Locations and Numbers

(Sheet 1 of 4)

UNIT 2

THIS DIAGRAM IS FOR HIGH ENERGY LINE BREAK PURPOSES ONLY.
REFERENCE FLOW DIAGRAM OFD-121B-2.1 FOR COMPLETE SYSTEM DESIGN INFORMATION.

HELB–121B–02–01

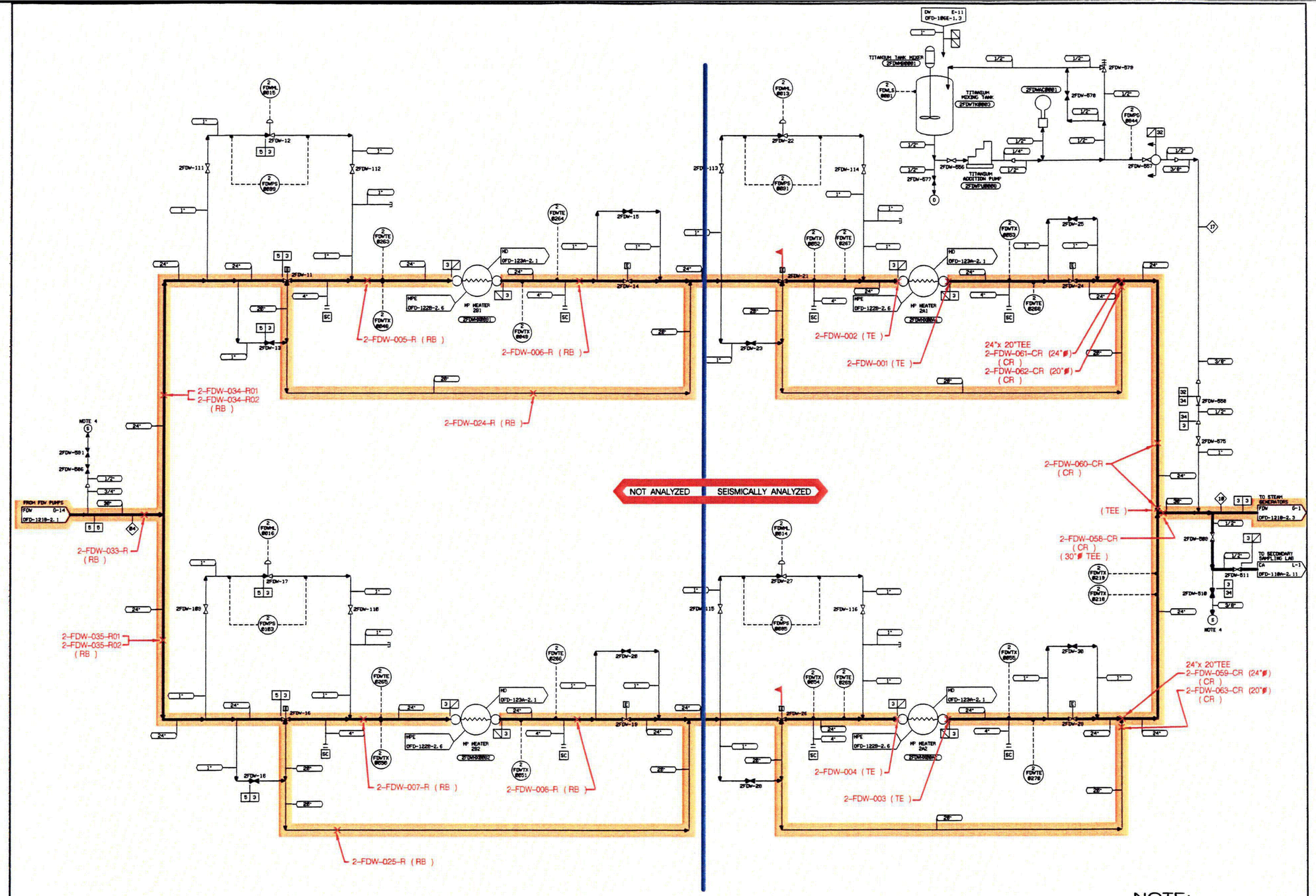

NOTE:

ALL HIGHLIGHTED PIPING IS ANALYZED EXCEPT AS NOTED.

UNIT 2

LEGEND

- High Energy Piping (Unit 1)
- High Energy Piping (Unit 2)
- High Energy Piping (Unit 3)
- X – High Energy Line Break Location
- N-SYS-NNN (-N) – Break Number
- TE – Terminal End (Break)
- RB – Running Break
- CR – Critical Crack
- IB – Intermediate Break
- Running Break Boundary

FIGURE 5.1–4
MAIN FEEDWATER SYSTEM

High Energy Lines, Piping Configurations, Boundaries, Break Locations and Numbers

(Sheet 2 of 4)

THIS DIAGRAM IS FOR HIGH ENERGY LINE BREAK PURPOSES ONLY.
REFERENCE FLOW DIAGRAM OFD-121B-2.2 FOR COMPLETE SYSTEM DESIGN INFORMATION.

HELB–121B–02–02

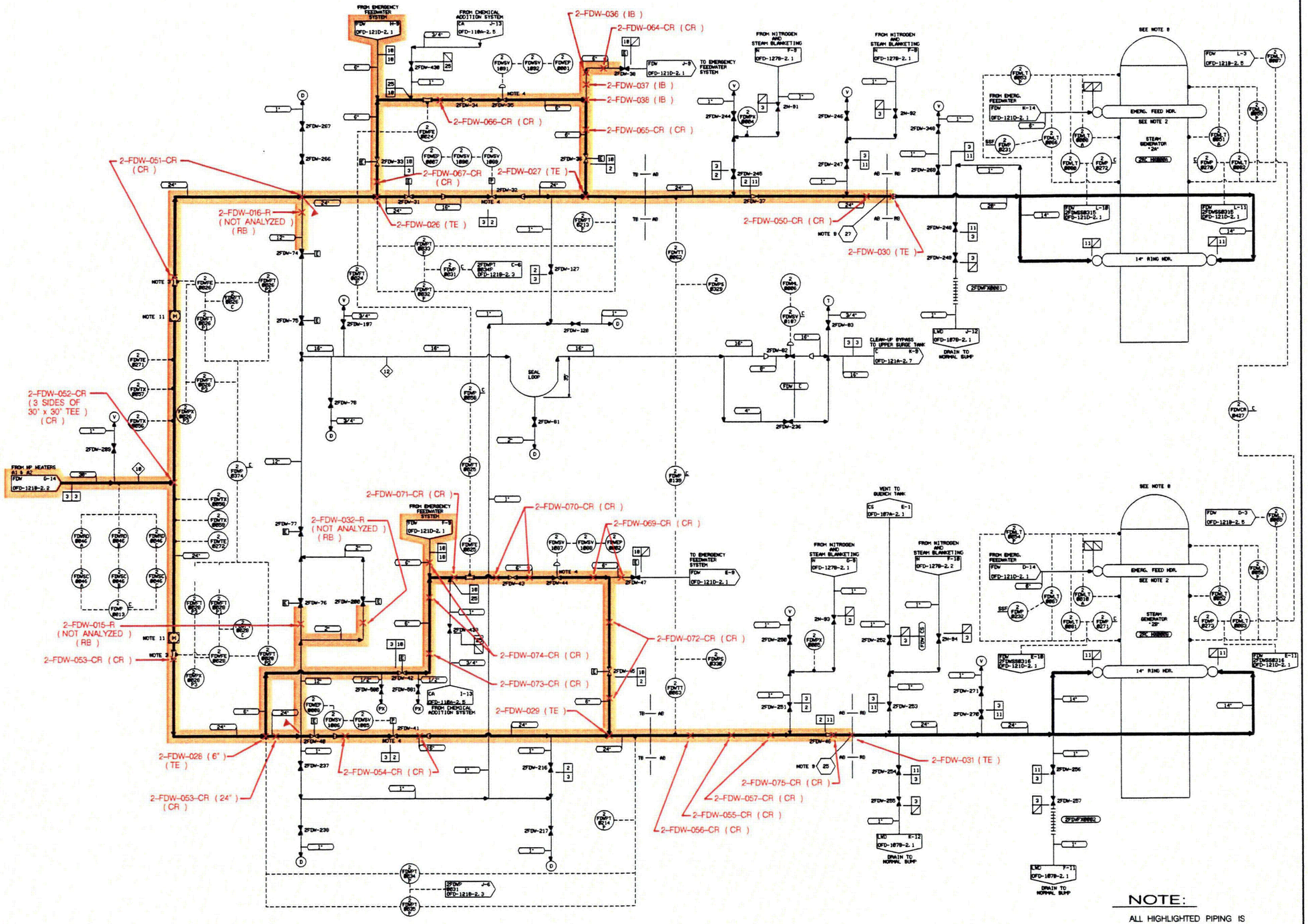

LEGEND

- High Energy Piping (Unit 1)
- High Energy Piping (Unit 2)
- High Energy Piping (Unit 3)
- X – High Energy Line Break Location
- N-SYS-NNN (-N) – Break Number
- TE – Terminal End (Break)
- RB – Running Break
- CR – Critical Crack
- IB – Intermediate Break
- Running Break Boundary

NOTE:

ALL HIGHLIGHTED PIPING IS ANALYZED EXCEPT AS NOTED.

UNIT 2

FIGURE 5.1–4
MAIN FEEDWATER SYSTEM

High Energy Lines, Piping Configurations, Boundaries, Break Locations and Numbers

(Sheet 3 of 4)

THIS DIAGRAM IS FOR HIGH ENERGY LINE BREAK PURPOSES ONLY.
REFERENCE FLOW DIAGRAM OFD-121B-2.3 FOR COMPLETE SYSTEM DESIGN INFORMATION.

HELB–121B–02–03

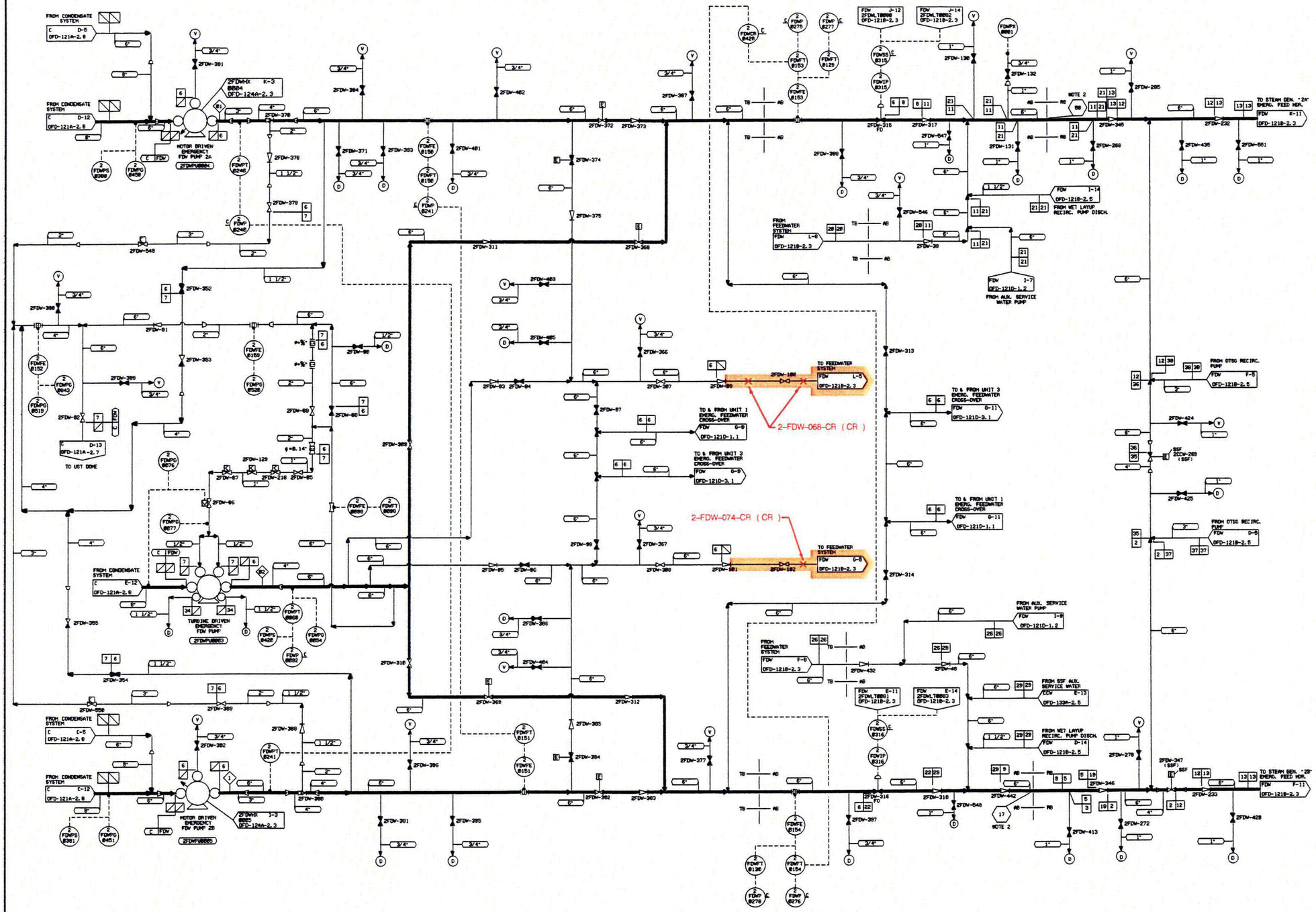

LEGEND

- High Energy Piping (Unit 1)
- High Energy Piping (Unit 2)
- High Energy Piping (Unit 3)
- X – High Energy Line Break Location
- N-SYS-NNN (-N) – Break Number
- TE – Terminal End (Break)
- RB – Running Break
- CR – Critical Crack
- IB – Intermediate Break
- Running Break Boundary

FIGURE 5.1–4
MAIN FEEDWATER SYSTEM

High Energy Lines, Piping Configurations, Boundaries, Break Locations and Numbers

(Sheet 4 of 4)

UNIT 2

THIS DIAGRAM IS FOR HIGH ENERGY LINE BREAK PURPOSES ONLY.
REFERENCE FLOW DIAGRAM OFD–121D–2.1 FOR COMPLETE SYSTEM DESIGN INFORMATION.

HELB–121D–02–01

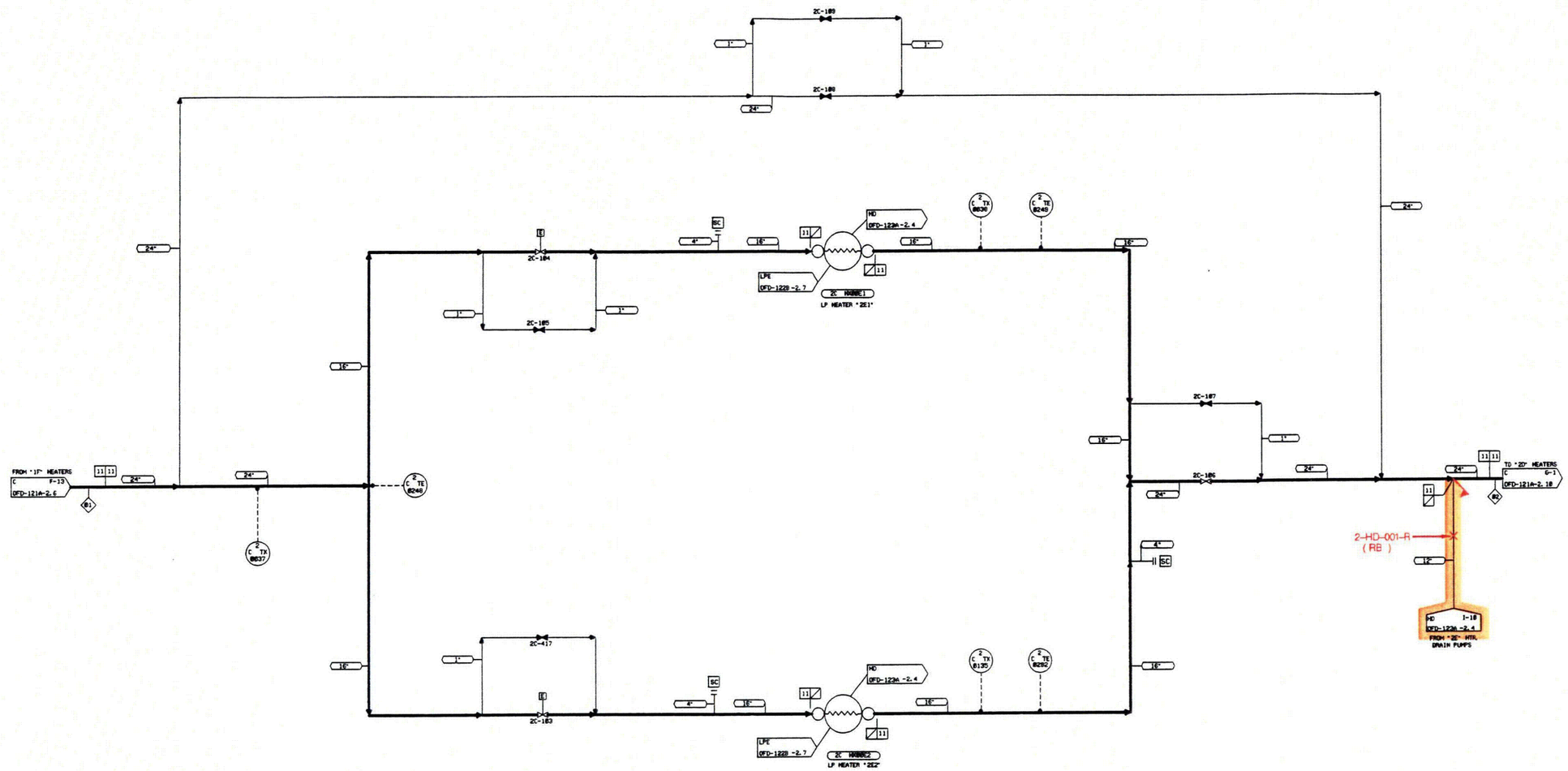

LEGEND

- High Energy Piping (Unit 1)
- High Energy Piping (Unit 2)
- High Energy Piping (Unit 3)
- X – High Energy Line Break Location
- N-SYS-NNN (-N) – Break Number
- TE – Terminal End (Break)
- RB – Running Break
- CR – Critical Crack
- IB – Intermediate Break
- Running Break Boundary

FIGURE 5.1–5
HEATER DRAIN SYSTEM

High Energy Lines, Piping Configurations, Boundaries, Break Locations and Numbers

(Sheet 1 of 7)

UNIT 2

THIS DIAGRAM IS FOR HIGH ENERGY LINE BREAK PURPOSES ONLY.
REFERENCE FLOW DIAGRAM OFD-121A-2.9 FOR COMPLETE SYSTEM DESIGN INFORMATION.

HELB–121A–02–09

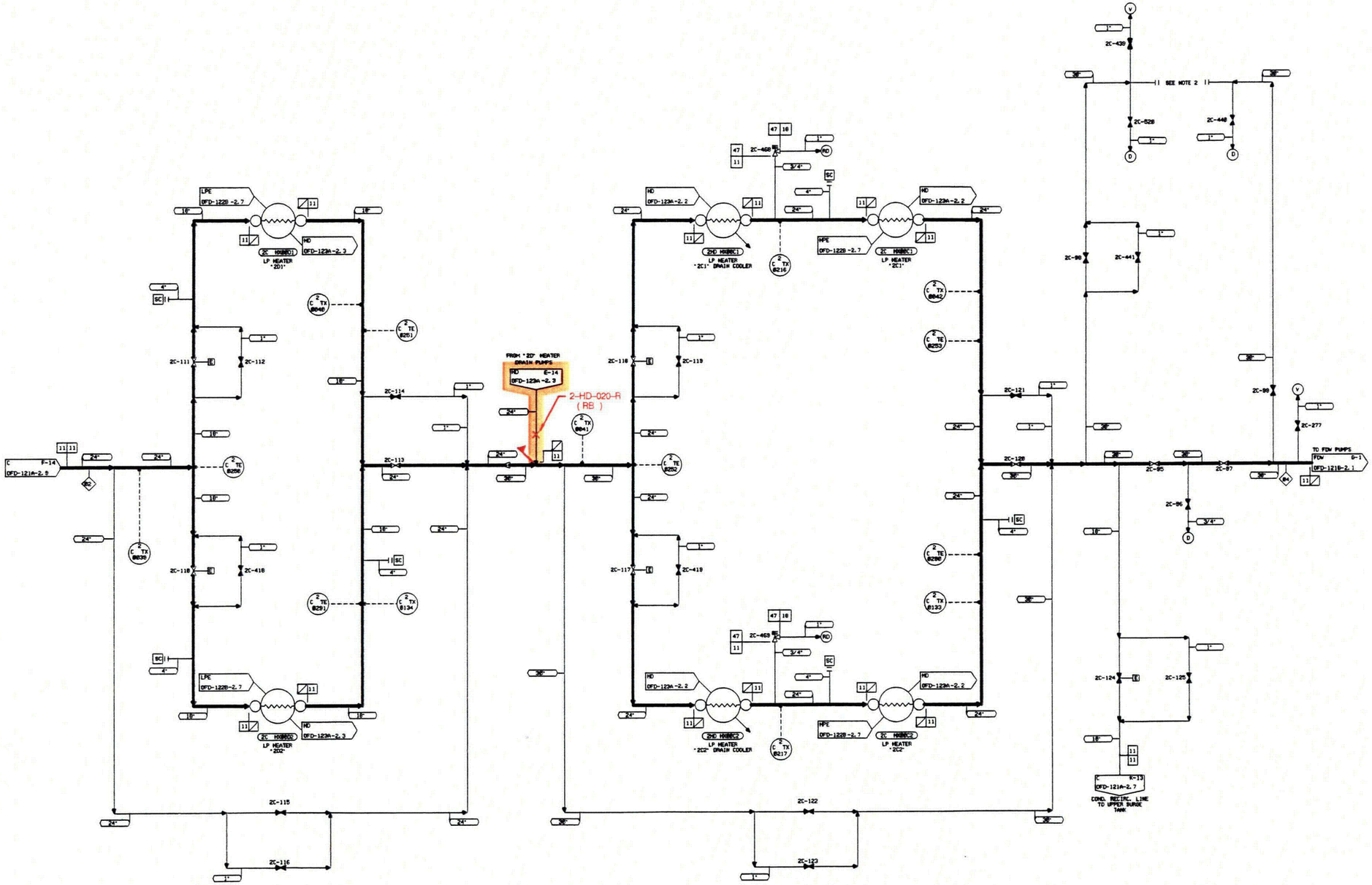

LEGEND

- High Energy Piping (Unit 1)
- High Energy Piping (Unit 2)
- High Energy Piping (Unit 3)
- X – High Energy Line Break Location
- N-SYS-NNN (-N) – Break Number
- TE – Terminal End (Break)
- RB – Running Break
- CR – Critical Crack
- IB – Intermediate Break
- Running Break Boundary

FIGURE 5.1–5
HEATER DRAIN SYSTEM

High Energy Lines, Piping Configurations, Boundaries, Break Locations and Numbers

(Sheet 2 of 7)

UNIT 2

THIS DIAGRAM IS FOR HIGH ENERGY LINE BREAK PURPOSES ONLY.
REFERENCE FLOW DIAGRAM OFD–121A–2.10 FOR COMPLETE SYSTEM DESIGN INFORMATION.

HELB–121A–02–10

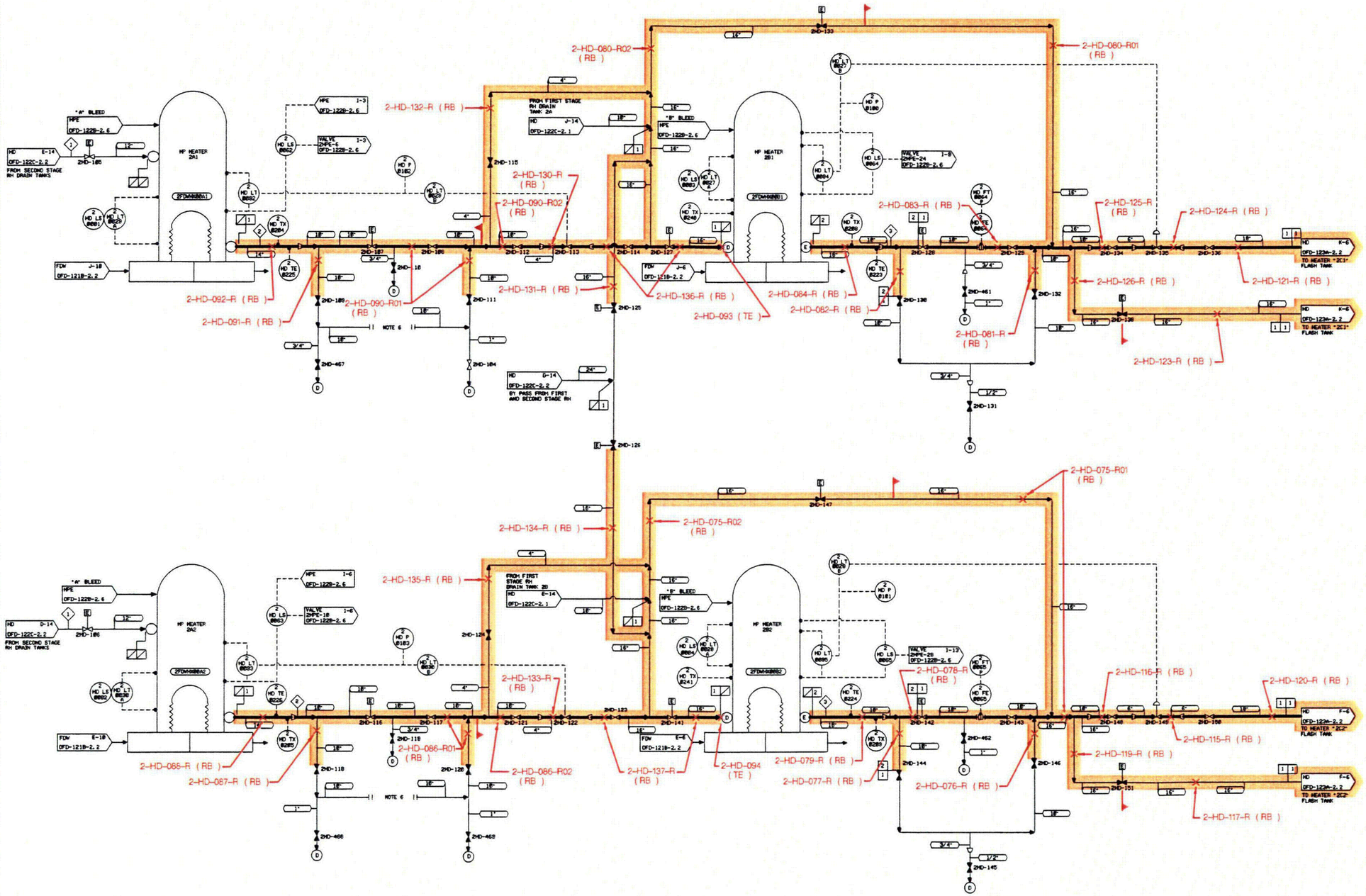

LEGEND

- High Energy Piping (Unit 1)
- High Energy Piping (Unit 2)
- High Energy Piping (Unit 3)
- X – High Energy Line Break Location
- N-SYS-NNN (-N) – Break Number
- TE – Terminal End (Break)
- RB – Running Break
- CR – Critical Crack
- IB – Intermediate Break
- Running Break Boundary

FIGURE 5.1–5
HEATER DRAIN SYSTEM

High Energy Lines, Piping Configurations, Boundaries, Break Locations and Numbers

(Sheet 3 of 7)

UNIT 2

THIS DIAGRAM IS FOR HIGH ENERGY LINE BREAK PURPOSES ONLY.
REFERENCE FLOW DIAGRAM OFD-123A-2.1 FOR COMPLETE SYSTEM DESIGN INFORMATION.

HELB–123A–02–01

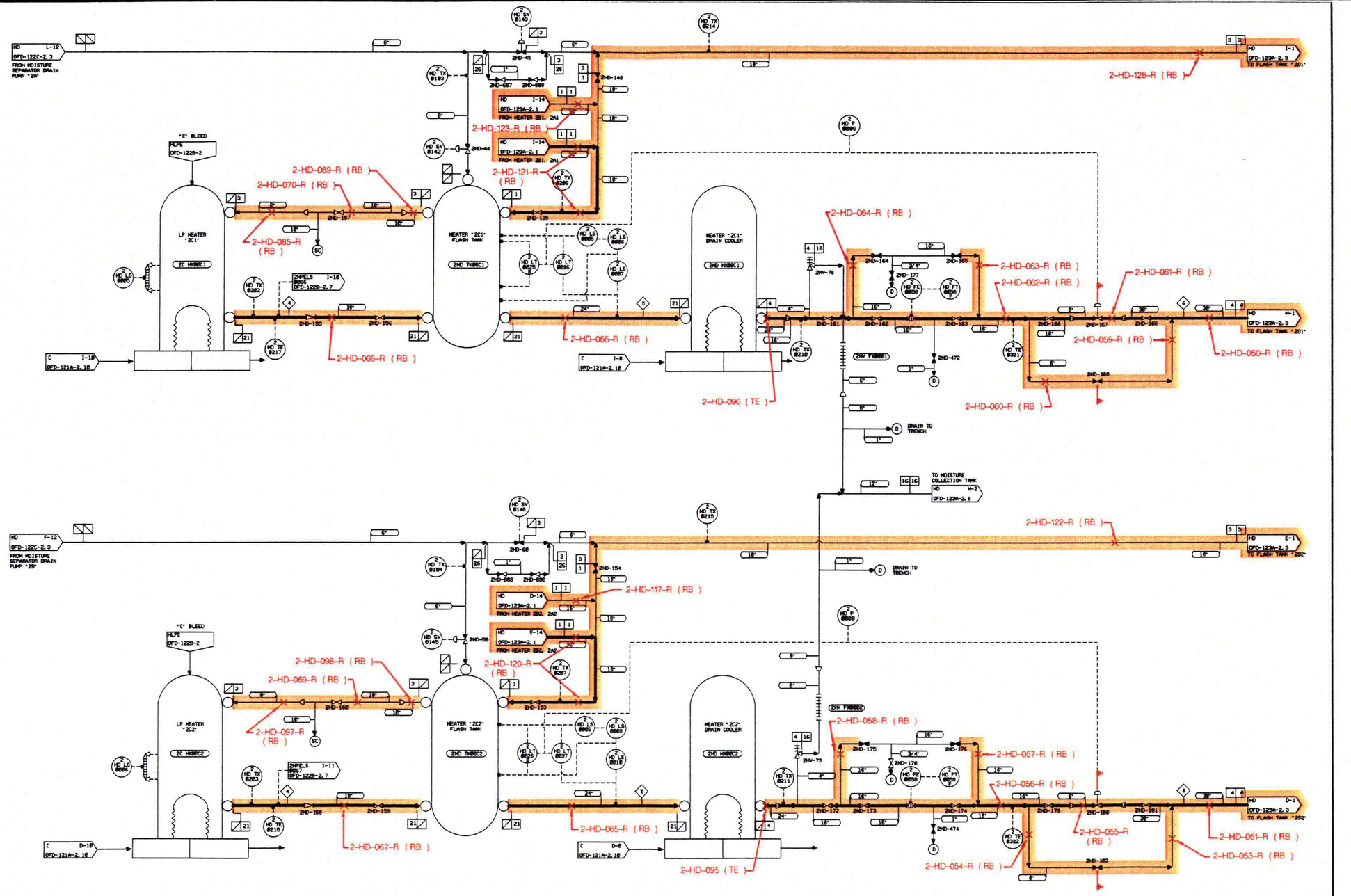

LEGEND

- High Energy Piping (Unit 1)
- High Energy Piping (Unit 2)
- High Energy Piping (Unit 3)
- X – High Energy Line Break Location
- N-SYS-NNN (-N) – Break Number
- TE – Terminal End (Break)
- RB – Running Break
- CR – Critical Crack
- IB – Intermediate Break
- Running Break Boundary

FIGURE 5.1-5
HEATER DRAIN SYSTEM

High Energy Lines, Piping Configurations, Boundaries, Break Locations and Numbers

(Sheet 4 of 7)

UNIT 2

THIS DIAGRAM IS FOR HIGH ENERGY LINE BREAK PURPOSES ONLY.
REFERENCE FLOW DIAGRAM OFD-123A-2.2 FOR COMPLETE SYSTEM DESIGN INFORMATION.

HELB-123A-02-02

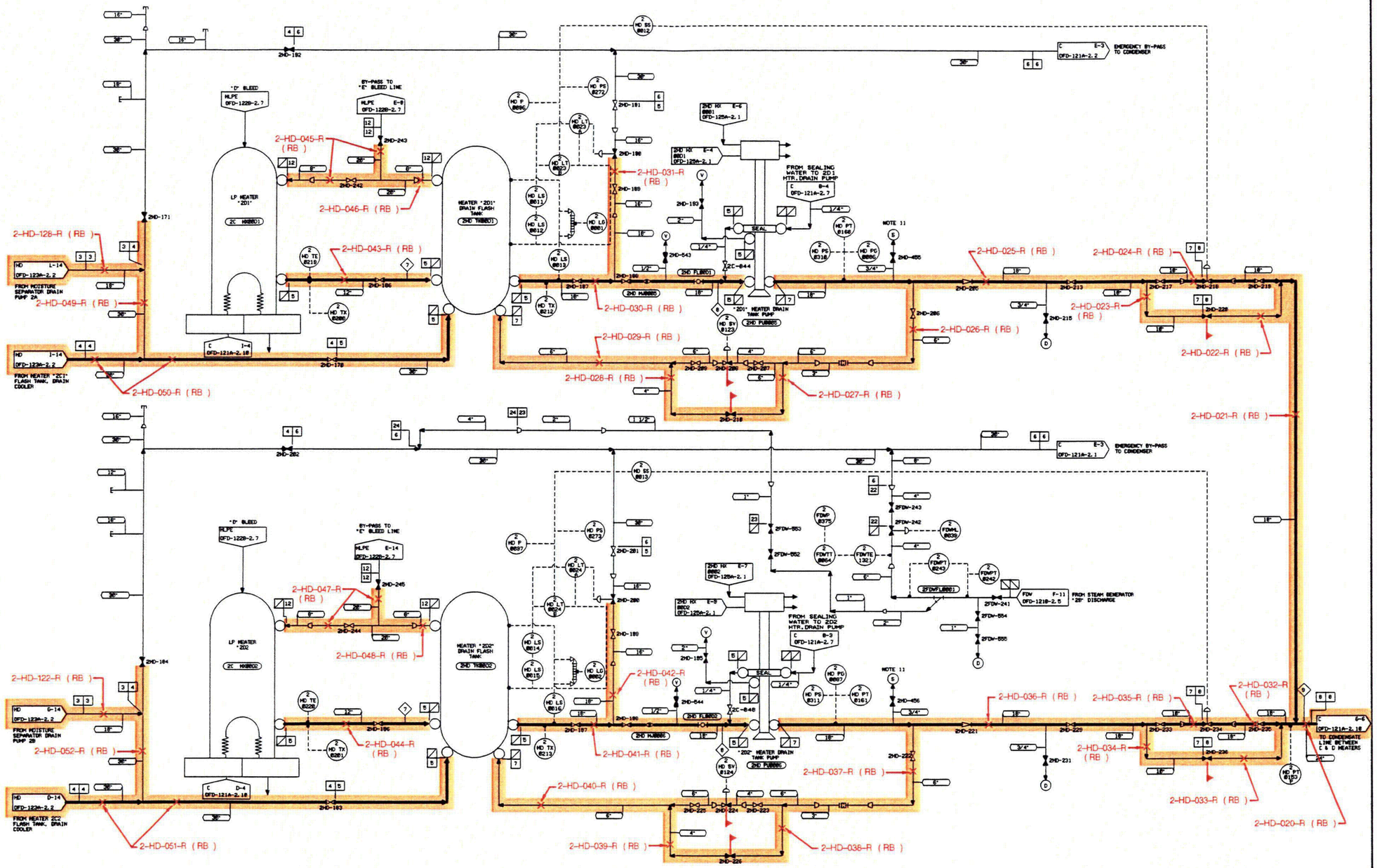

LEGEND

- High Energy Piping (Unit 1)
- High Energy Piping (Unit 2)
- High Energy Piping (Unit 3)
- X – High Energy Line Break Location
- N-SYS-NNN (-N) – Break Number
- TE – Terminal End (Break)
- RB – Running Break
- CR – Critical Crack
- IB – Intermediate Break
- Running Break Boundary

FIGURE 5.1-5
HEATER DRAIN SYSTEM

High Energy Lines, Piping Configurations, Boundaries, Break Locations and Numbers

(Sheet 5 of 7)

UNIT 2

THIS DIAGRAM IS FOR HIGH ENERGY LINE BREAK PURPOSES ONLY.
REFERENCE FLOW DIAGRAM OFD-123A-2.3 FOR COMPLETE SYSTEM DESIGN INFORMATION.

HELB-123A-02-03

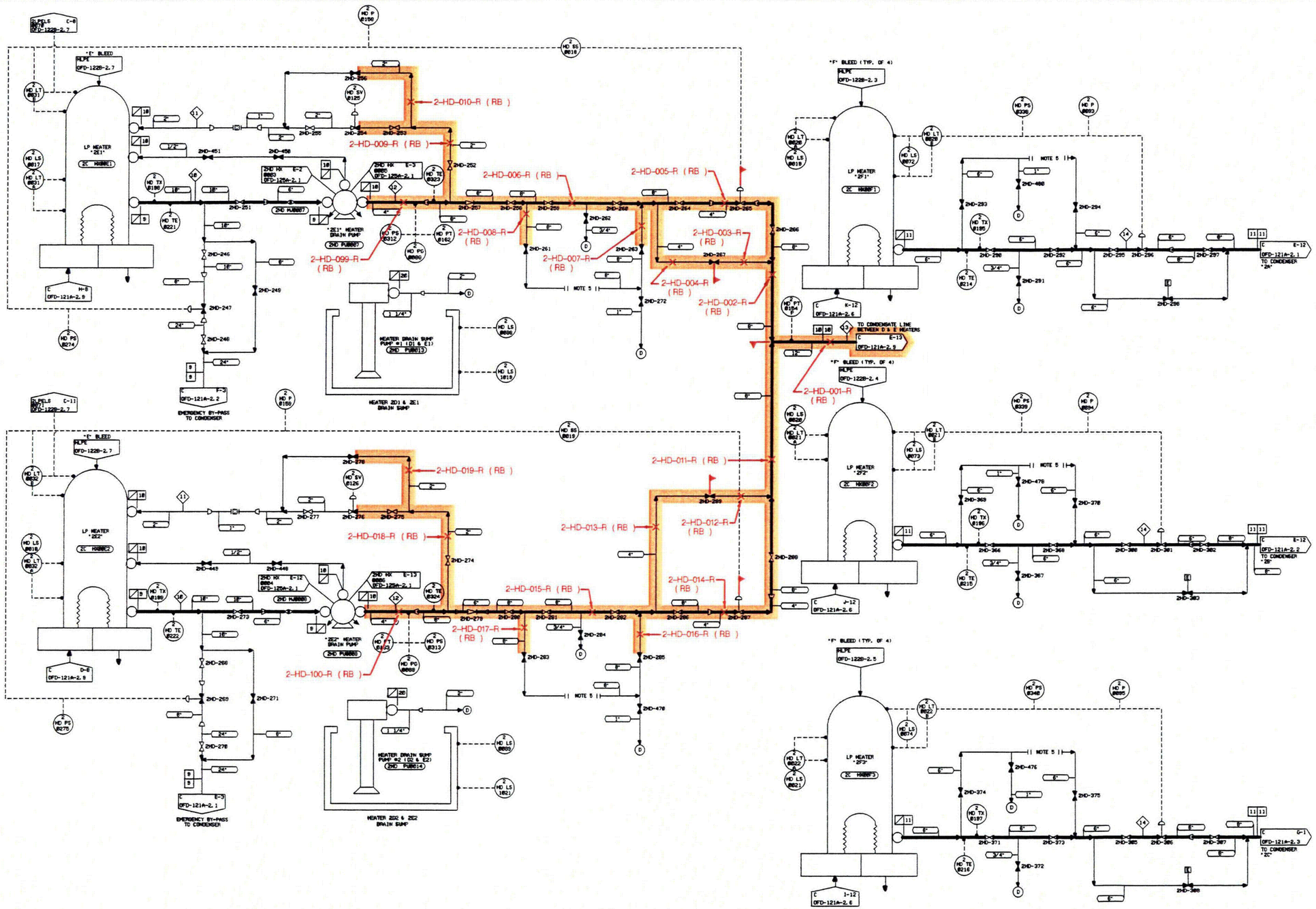

LEGEND

- High Energy Piping (Unit 1)
- High Energy Piping (Unit 2)
- High Energy Piping (Unit 3)
- X – High Energy Line Break Location
- N–SYS–NNN (–N) – Break Number
- TE – Terminal End (Break)
- RB – Running Break
- CR – Critical Crack
- IB – Intermediate Break
- Running Break Boundary

FIGURE 5.1–5
HEATER DRAIN SYSTEM

High Energy Lines, Piping Configurations, Boundaries, Break Locations and Numbers

(Sheet 6 of 7)

UNIT 2

THIS DIAGRAM IS FOR HIGH ENERGY LINE BREAK PURPOSES ONLY.
REFERENCE FLOW DIAGRAM OFD–123A–2.4 FOR COMPLETE SYSTEM DESIGN INFORMATION.

HELB–123A–02–04

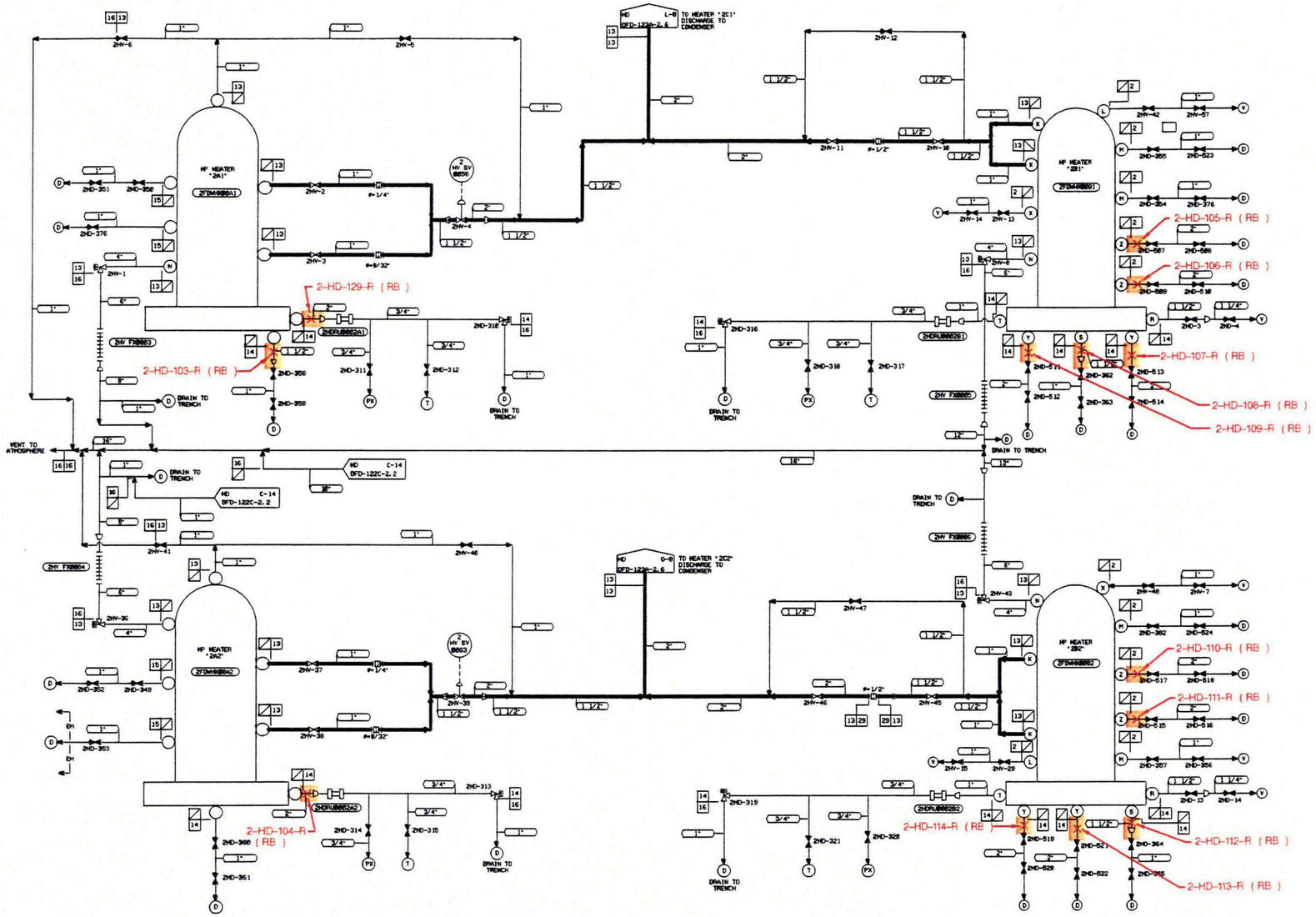

LEGEND

- High Energy Piping (Unit 1)
- High Energy Piping (Unit 2)
- High Energy Piping (Unit 3)
- X – High Energy Line Break Location
- N–SYS–NNN (–N) – Break Number
- TE – Terminal End (Break)
- RB – Running Break
- CR – Critical Crack
- IB – Intermediate Break
- Running Break Boundary

FIGURE 5.1–5
HEATER DRAIN SYSTEM

High Energy Lines, Piping Configurations, Boundaries, Break Locations and Numbers

(Sheet 7 of 7)

UNIT 2

THIS DIAGRAM IS FOR HIGH ENERGY LINE BREAK PURPOSES ONLY.
REFERENCE FLOW DIAGRAM OFD–123A–2.5 FOR COMPLETE SYSTEM DESIGN INFORMATION.

HELB–123A–02–05

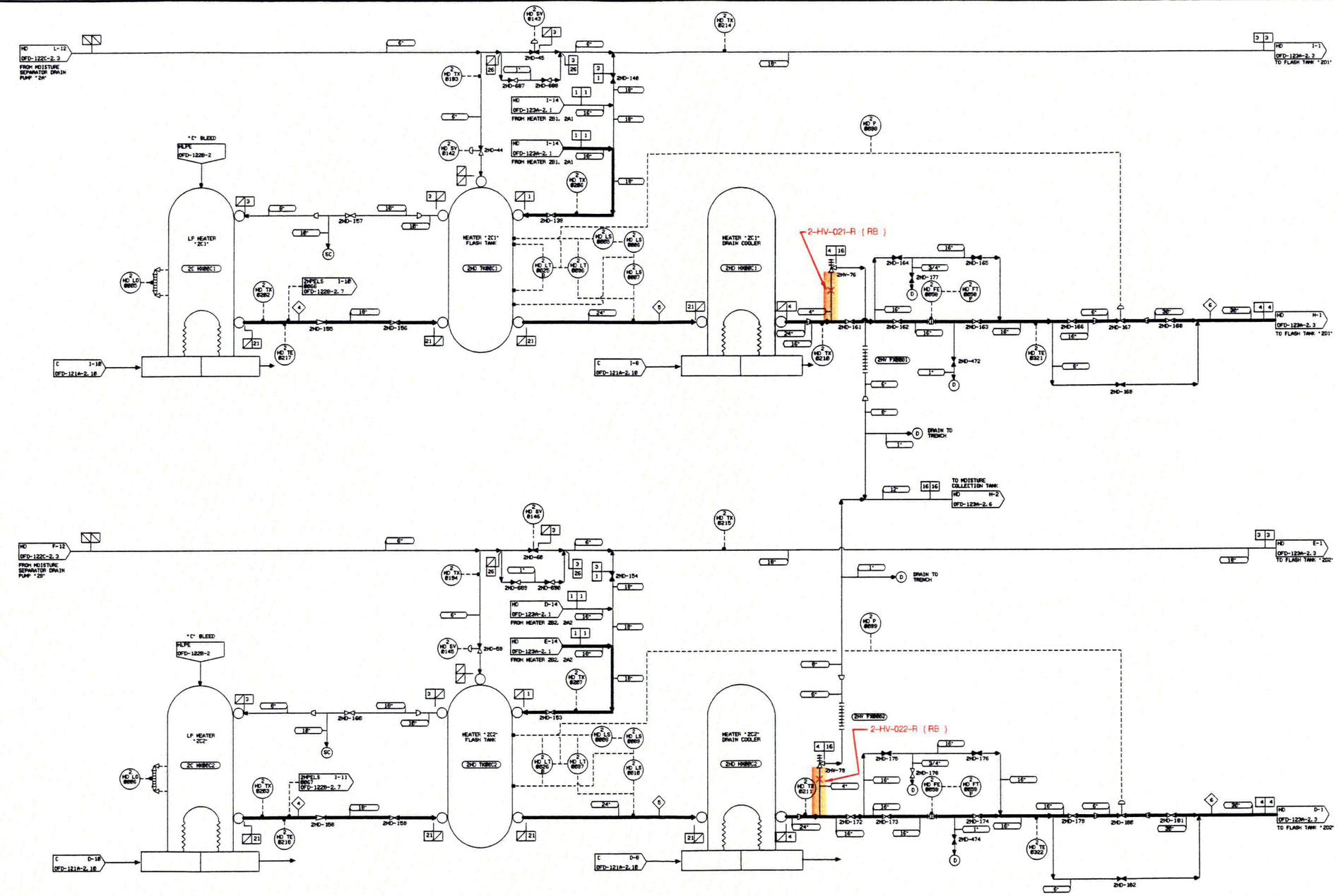

LEGEND

- High Energy Piping (Unit 1)
- High Energy Piping (Unit 2)
- High Energy Piping (Unit 3)
- X – High Energy Line Break Location
- N-SYS-NNN (-N) – Break Number
- TE – Terminal End (Break)
- RB – Running Break
- CR – Critical Crack
- IB – Intermediate Break
- Running Break Boundary

FIGURE 5.1–6
HEATER VENT SYSTEM

High Energy Lines, Piping Configurations, Boundaries, Break Locations and Numbers

(Sheet 1 of 3)

UNIT 2

THIS DIAGRAM IS FOR HIGH ENERGY LINE BREAK PURPOSES ONLY.
REFERENCE FLOW DIAGRAM OFD-123A-2.2 FOR COMPLETE SYSTEM DESIGN INFORMATION.

HELB–123A–02–02

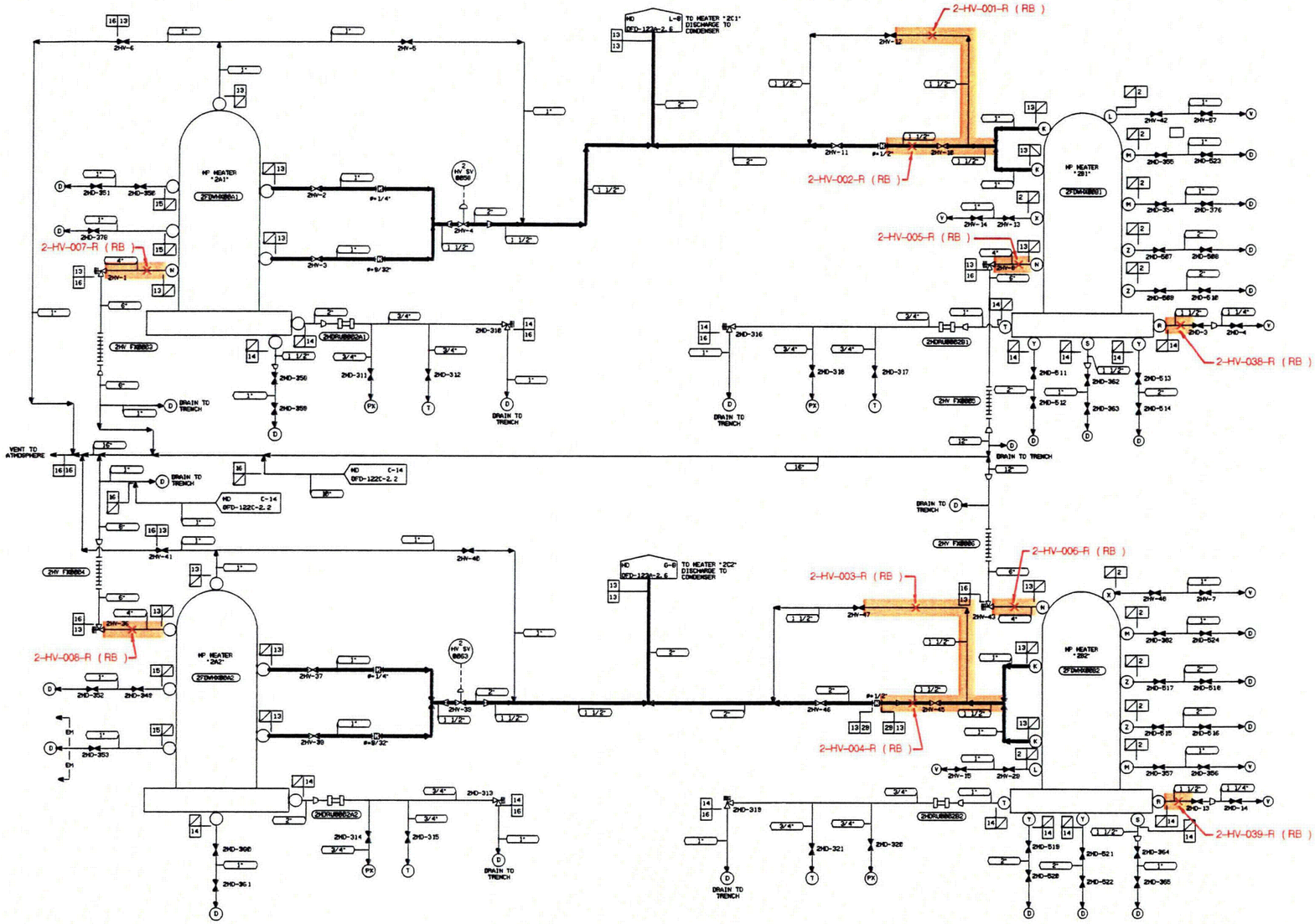

LEGEND

- High Energy Piping (Unit 1)
- High Energy Piping (Unit 2)
- High Energy Piping (Unit 3)

X – High Energy Line Break Location
N-SYS-NNN (-N) – Break Number
TE – Terminal End (Break)
RB – Running Break
CR – Critical Crack
IB – Intermediate Break
– Running Break Boundary

UNIT 2

FIGURE 5.1–6
HEATER VENT SYSTEM

High Energy Lines, Piping Configurations, Boundaries, Break Locations and Numbers
(Sheet 2 of 3)

THIS DIAGRAM IS FOR HIGH ENERGY LINE BREAK PURPOSES ONLY.
REFERENCE FLOW DIAGRAM OFD-123A-2.5 FOR COMPLETE SYSTEM DESIGN INFORMATION.

HELB–123A–02–05

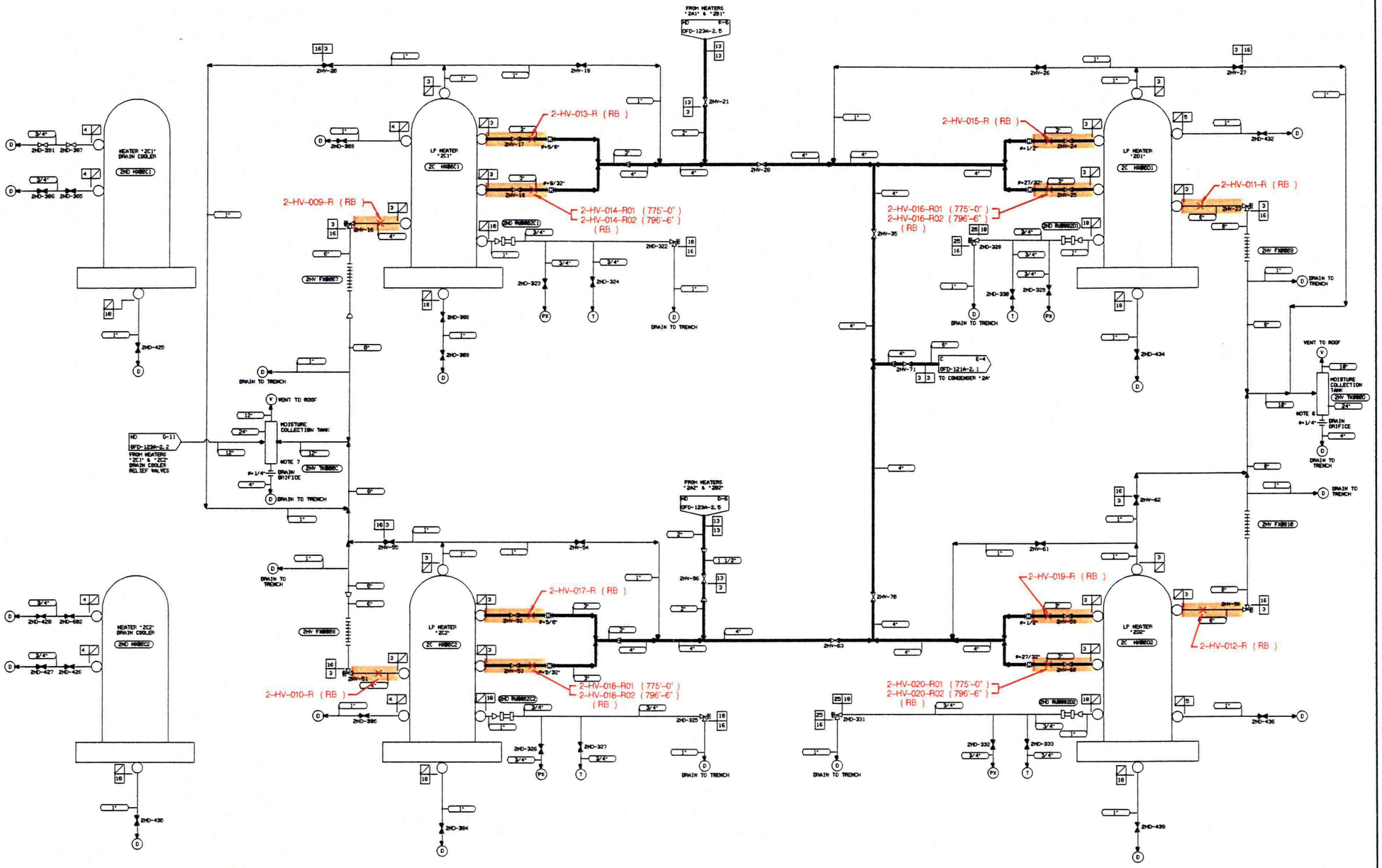

LEGEND

- High Energy Piping (Unit 1)
- High Energy Piping (Unit 2)
- High Energy Piping (Unit 3)
- X – High Energy Line Break Location
- N-SYS-NNN (-N) – Break Number
- TE – Terminal End (Break)
- RB – Running Break
- CR – Critical Crack
- IB – Intermediate Break
- Running Break Boundary

FIGURE 5.1–6
HEATER VENT SYSTEM

High Energy Lines, Piping Configurations, Boundaries, Break Locations and Numbers

(Sheet 3 of 3)

UNIT 2

THIS DIAGRAM IS FOR HIGH ENERGY LINE BREAK PURPOSES ONLY.
REFERENCE FLOW DIAGRAM OFD-123A-2.6 FOR COMPLETE SYSTEM DESIGN INFORMATION.

HELB–123A–02–06

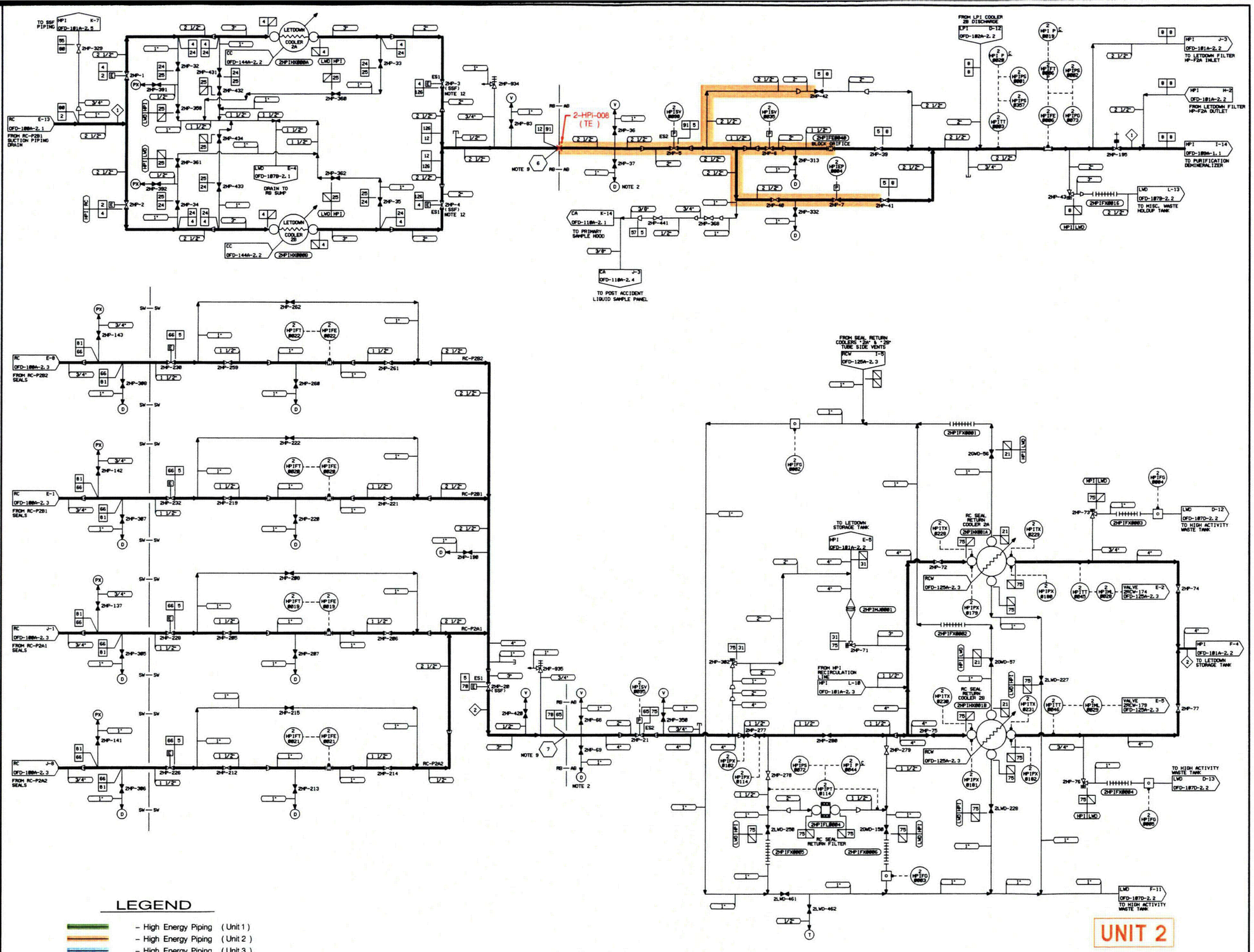

LEGEND

- High Energy Piping (Unit 1)
- High Energy Piping (Unit 2)
- High Energy Piping (Unit 3)
- X – High Energy Line Break Location
- N-SYS-NNN (-N) – Break Number
- TE – Terminal End (Break)
- RB – Running Break
- CR – Critical Crack
- IB – Intermediate Break
- Running Break Boundary

FIGURE 5.1–7
HIGH PRESSURE INJECTION SYSTEM

High Energy Lines, Piping Configurations, Boundaries, Break Locations and Numbers
(Sheet 1 of 4)

THIS DIAGRAM IS FOR HIGH ENERGY LINE BREAK PURPOSES ONLY.
REFERENCE FLOW DIAGRAM OFD-101A-2.1 FOR COMPLETE SYSTEM DESIGN INFORMATION.

HELB–101A–02–01

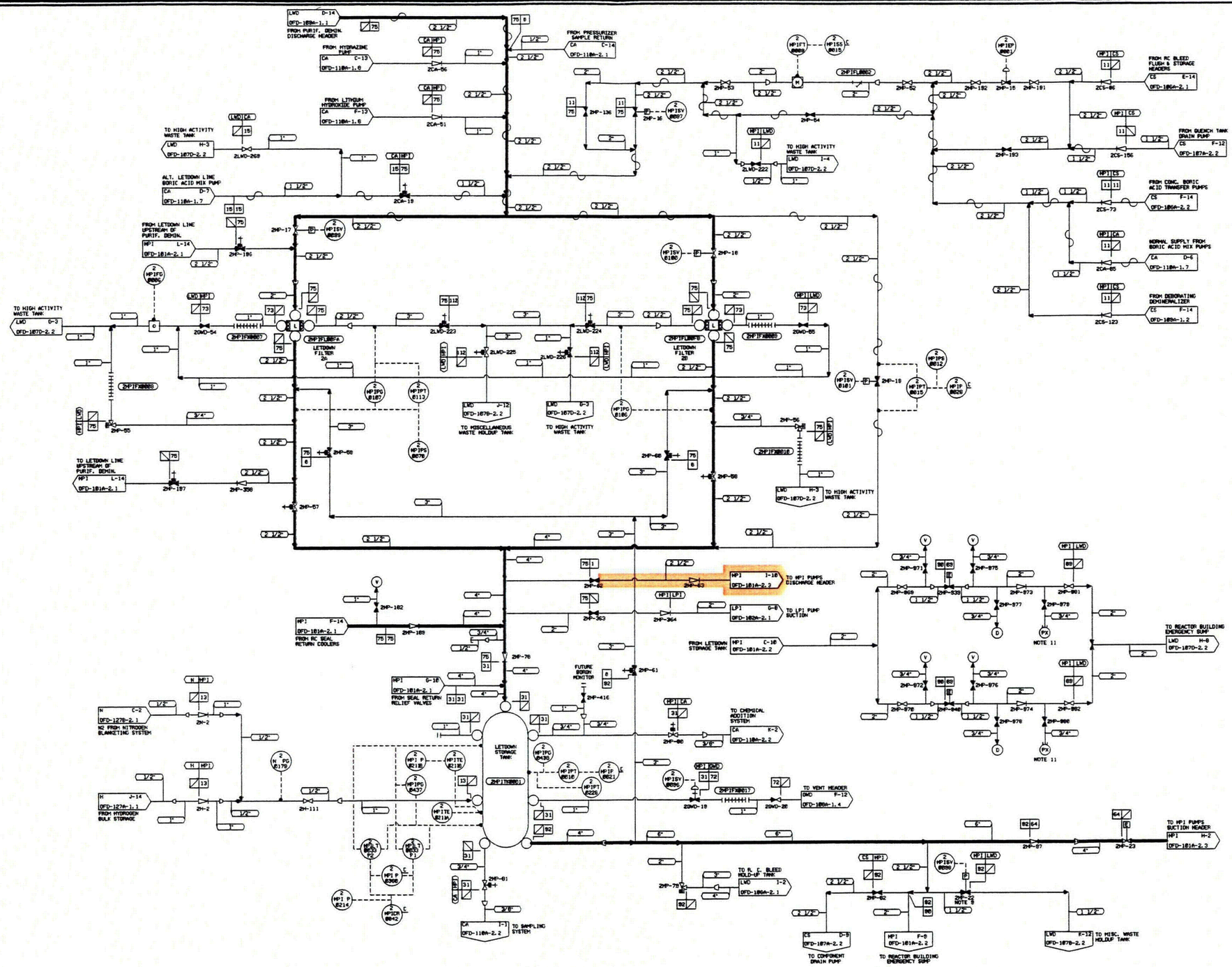

LEGEND

- High Energy Piping (Unit 1)
- High Energy Piping (Unit 2)
- High Energy Piping (Unit 3)
- X – High Energy Line Break Location
- N-SYS-NNN (-N) – Break Number
- TE – Terminal End (Break)
- RB – Running Break
- CR – Critical Crack
- IB – Intermediate Break
- Running Break Boundary

UNIT 2

FIGURE 5.1–7
HIGH PRESSURE INJECTION SYSTEM

High Energy Lines, Piping Configurations, Boundaries, Break Locations and Numbers

(Sheet 2 of 4)

THIS DIAGRAM IS FOR HIGH ENERGY LINE BREAK PURPOSES ONLY.
REFERENCE FLOW DIAGRAM OFD–101A–2.2 FOR COMPLETE SYSTEM DESIGN INFORMATION.

HELB–101A–02–02

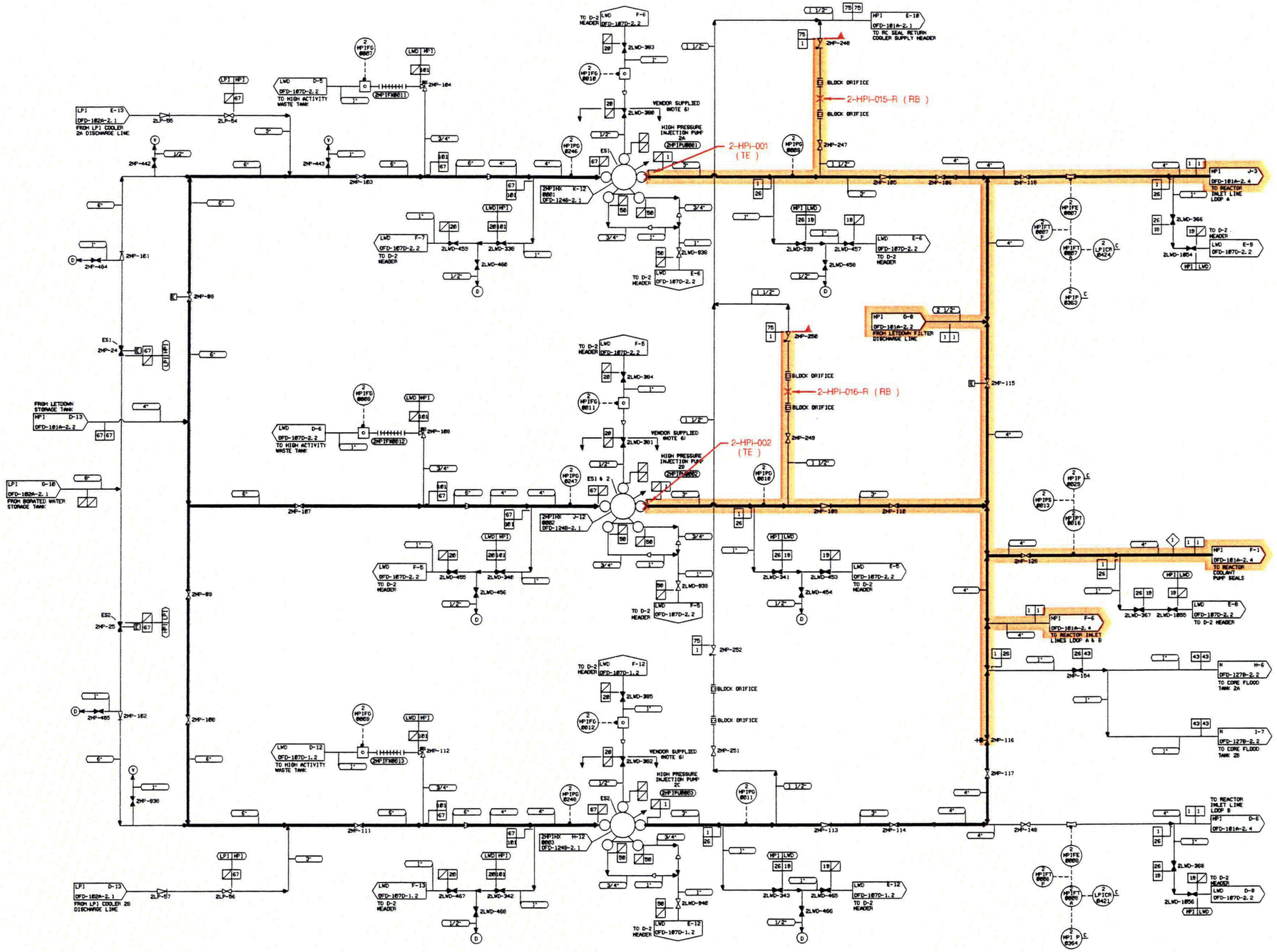

LEGEND

- High Energy Piping (Unit 1)
- High Energy Piping (Unit 2)
- High Energy Piping (Unit 3)
- X – High Energy Line Break Location
- N-SYS-NNN (-N) – Break Number
- TE – Terminal End (Break)
- RB – Running Break
- CR – Critical Crack
- IB – Intermediate Break
- Running Break Boundary

FIGURE 5.1–7
HIGH PRESSURE INJECTION SYSTEM

High Energy Lines, Piping Configurations, Boundaries, Break Locations and Numbers
(Sheet 3 of 4)

UNIT 2

THIS DIAGRAM IS FOR HIGH ENERGY LINE BREAK PURPOSES ONLY.
REFERENCE FLOW DIAGRAM OFD-101A-2.3 FOR COMPLETE SYSTEM DESIGN INFORMATION.

HELB–101A–02–03

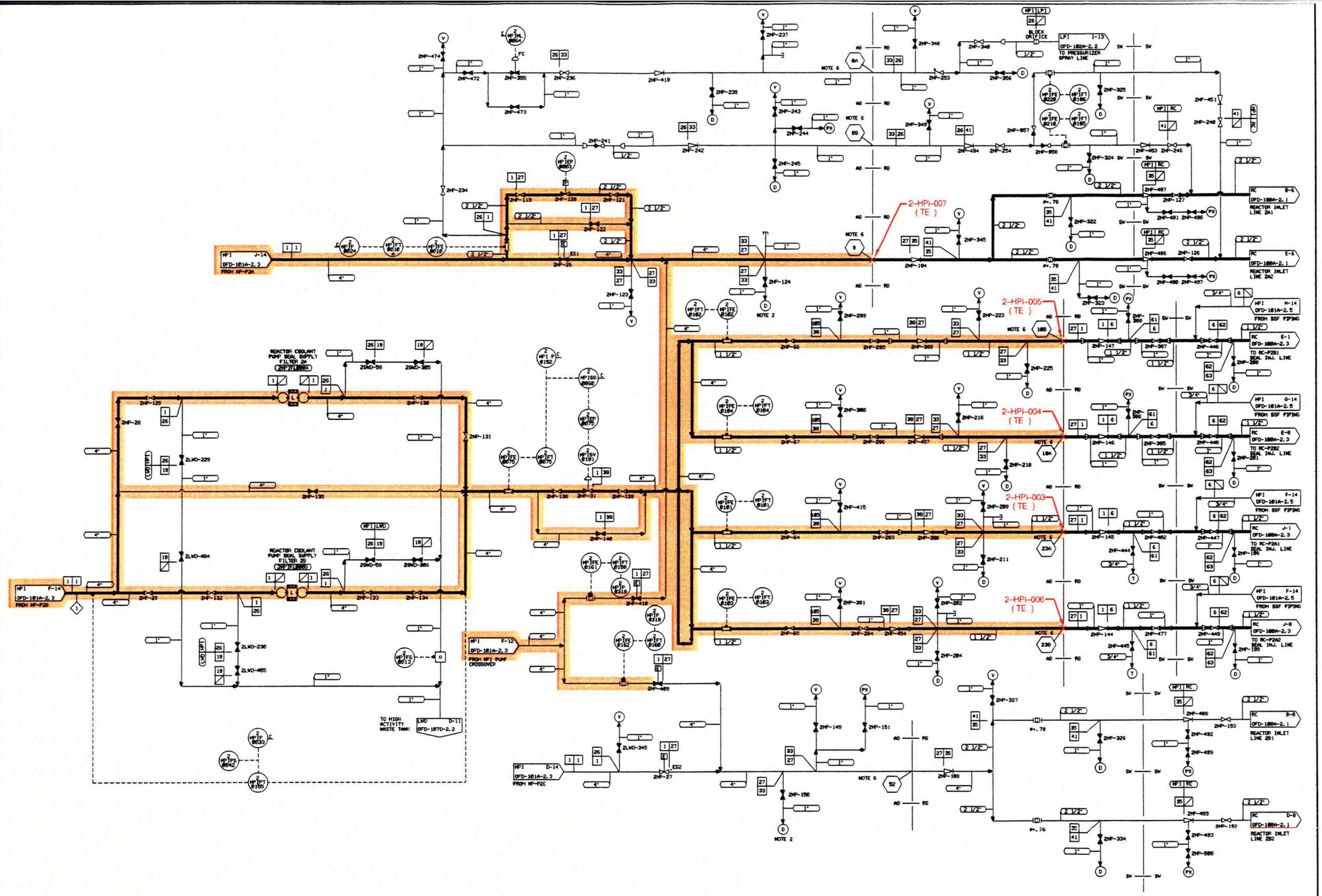

LEGEND

- High Energy Piping (Unit 1)
- High Energy Piping (Unit 2)
- High Energy Piping (Unit 3)
- X – High Energy Line Break Location
- N-SYS-NNN (-N) – Break Number
- TE – Terminal End (Break)
- RB – Running Break
- CR – Critical Crack
- IB – Intermediate Break
- Running Break Boundary

UNIT 2

FIGURE 5.1-7
HIGH PRESSURE INJECTION SYSTEM

High Energy Lines, Piping Configurations, Boundaries, Break Locations and Numbers

(Sheet 4 of 4)

THIS DIAGRAM IS FOR HIGH ENERGY LINE BREAK PURPOSES ONLY.
REFERENCE FLOW DIAGRAM OFD-101A-2.4 FOR COMPLETE SYSTEM DESIGN INFORMATION.

HELB-101A-02-04

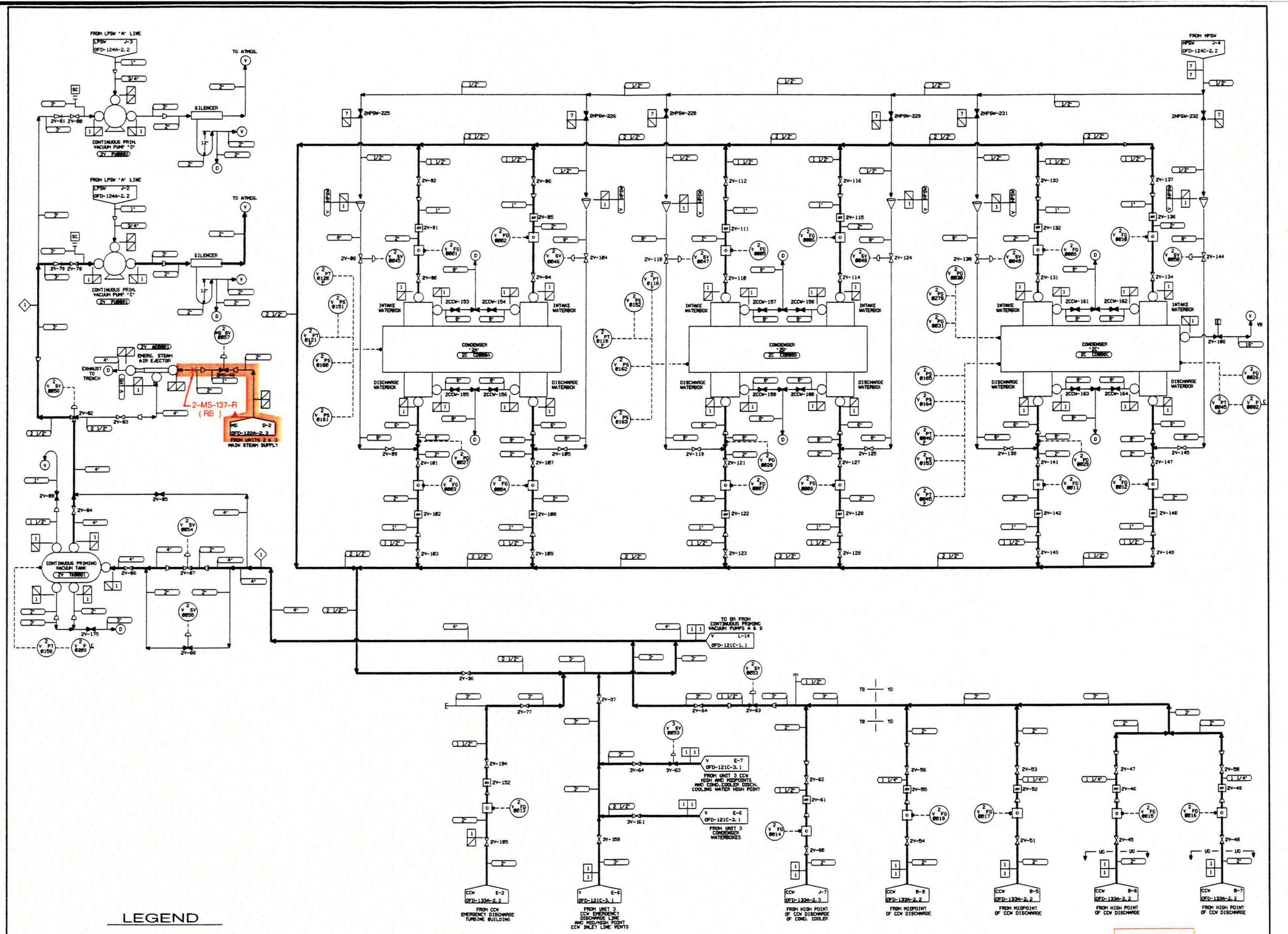

LEGEND

- High Energy Piping (Unit 1)
- High Energy Piping (Unit 2)
- High Energy Piping (Unit 3)
- X – High Energy Line Break Location
- N-SYS-NNN (-N) – Break Number
- TE – Terminal End (Break)
- RB – Running Break
- CR – Critical Crack
- IB – Intermediate Break
- Running Break Boundary

FIGURE 5.1-8
MAIN STEAM SYSTEM

High Energy Lines, Piping Configurations, Boundaries, Break Locations and Numbers

(Sheet 1 of 11)

THIS DIAGRAM IS FOR HIGH ENERGY LINE BREAK PURPOSES ONLY.
REFERENCE FLOW DIAGRAM OFD-121C-2.1 FOR COMPLETE SYSTEM DESIGN INFORMATION.

HELB-121C-02-01

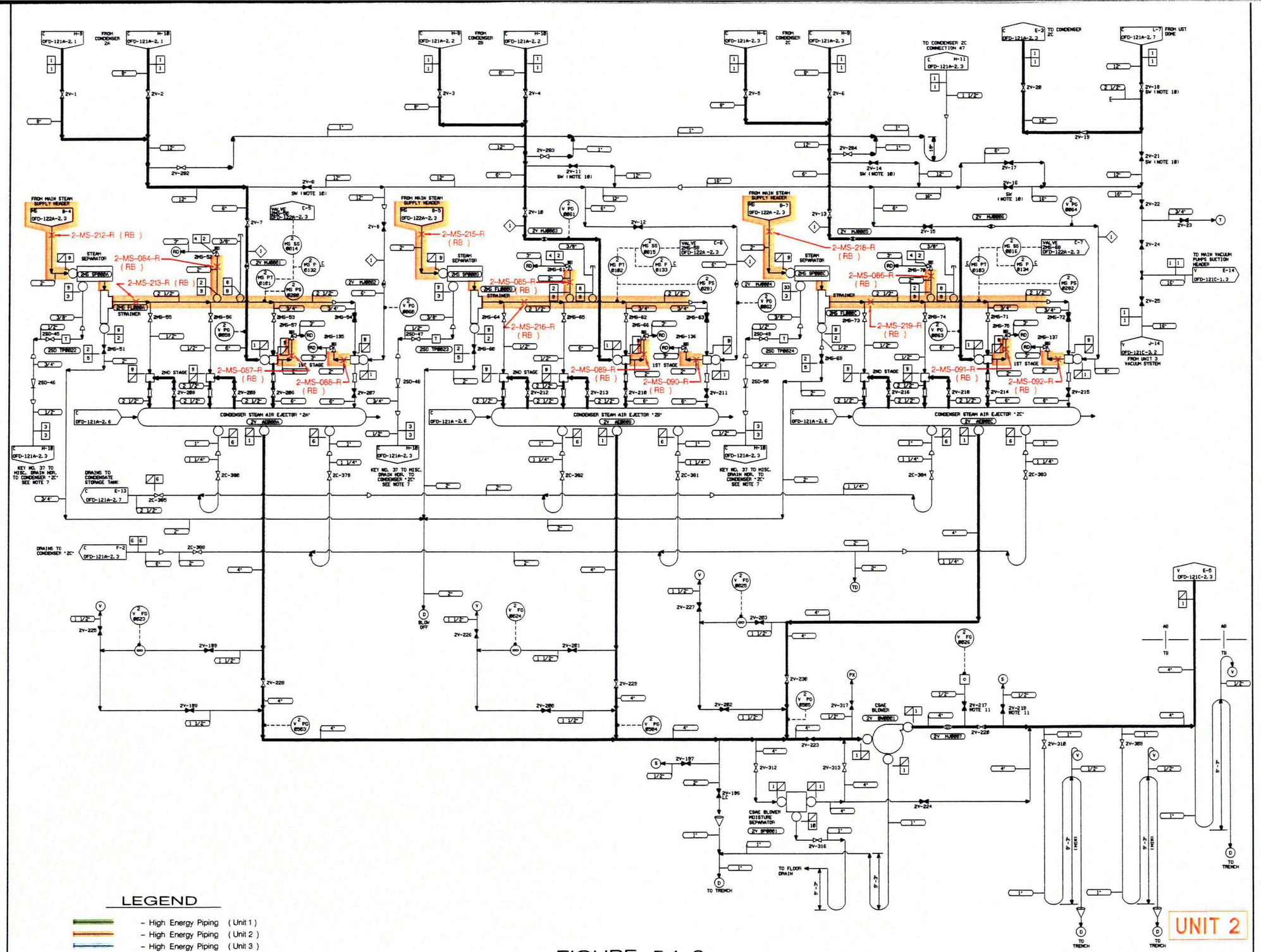

LEGEND

- High Energy Piping (Unit 1)
- High Energy Piping (Unit 2)
- High Energy Piping (Unit 3)
- X – High Energy Line Break Location
- N-SYS-NNN (-N) – Break Number
- TE – Terminal End (Break)
- RB – Running Break
- CR – Critical Crack
- IB – Intermediate Break
- Running Break Boundary

FIGURE 5.1–8
MAIN STEAM SYSTEM

High Energy Lines, Piping Configurations, Boundaries, Break Locations and Numbers

(Sheet 2 of 11)

THIS DIAGRAM IS FOR HIGH ENERGY LINE BREAK PURPOSES ONLY.
REFERENCE FLOW DIAGRAM OFD–121C–2.2 FOR COMPLETE SYSTEM DESIGN INFORMATION.

HELB–121C–02–02

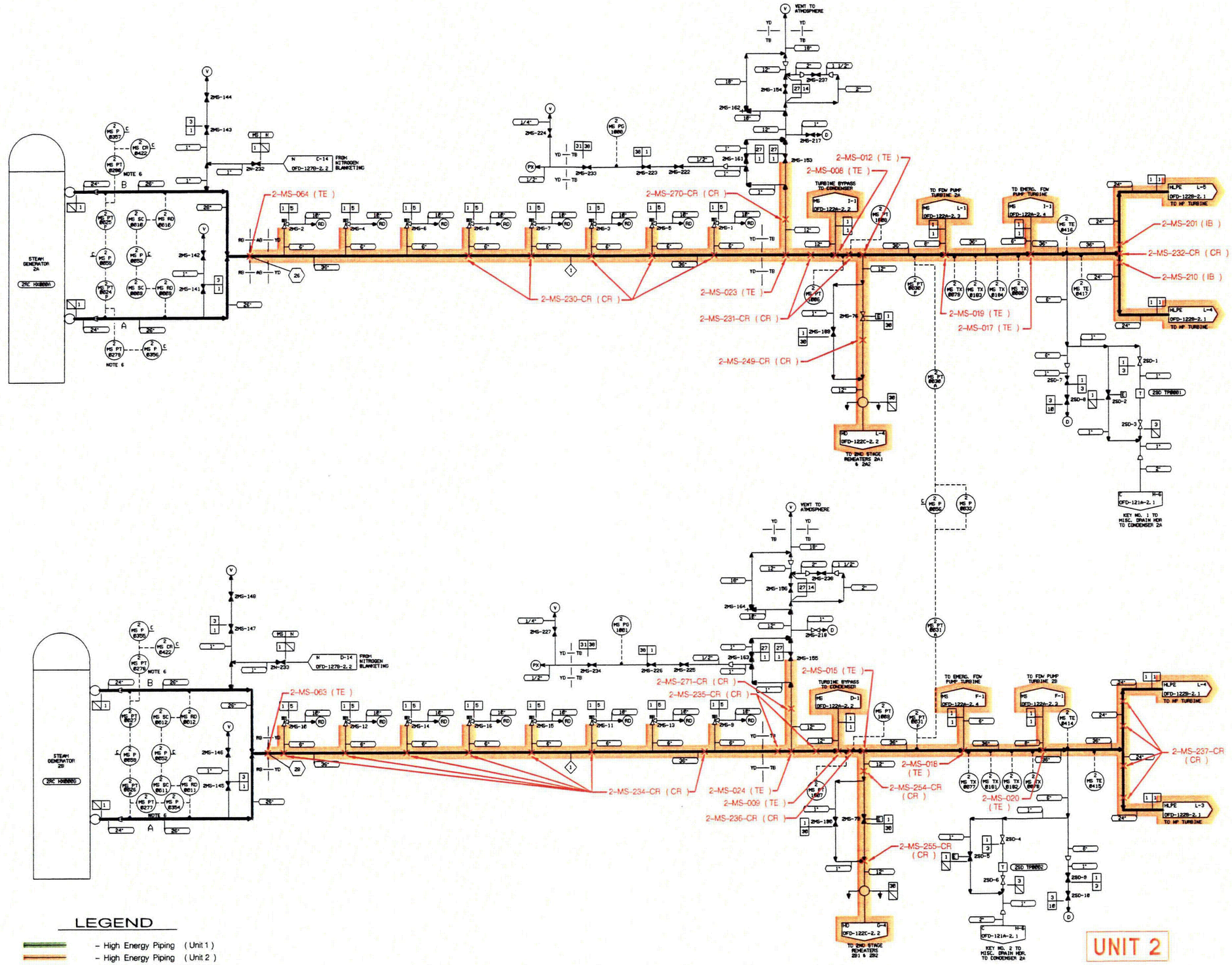

LEGEND

- High Energy Piping (Unit 1)
- High Energy Piping (Unit 2)
- High Energy Piping (Unit 3)
- X – High Energy Line Break Location
- N–SYS–NNN (–N) – Break Number
- TE – Terminal End (Break)
- RB – Running Break
- CR – Critical Crack
- IB – Intermediate Break
- Running Break Boundary

FIGURE 5.1–8
MAIN STEAM SYSTEM

High Energy Lines, Piping Configurations, Boundaries, Break Locations and Numbers

(Sheet 3 of 11)

THIS DIAGRAM IS FOR HIGH ENERGY LINE BREAK PURPOSES ONLY.
REFERENCE FLOW DIAGRAM OFD–122A–2.1 FOR COMPLETE SYSTEM DESIGN INFORMATION.

HELB–122A–02–01

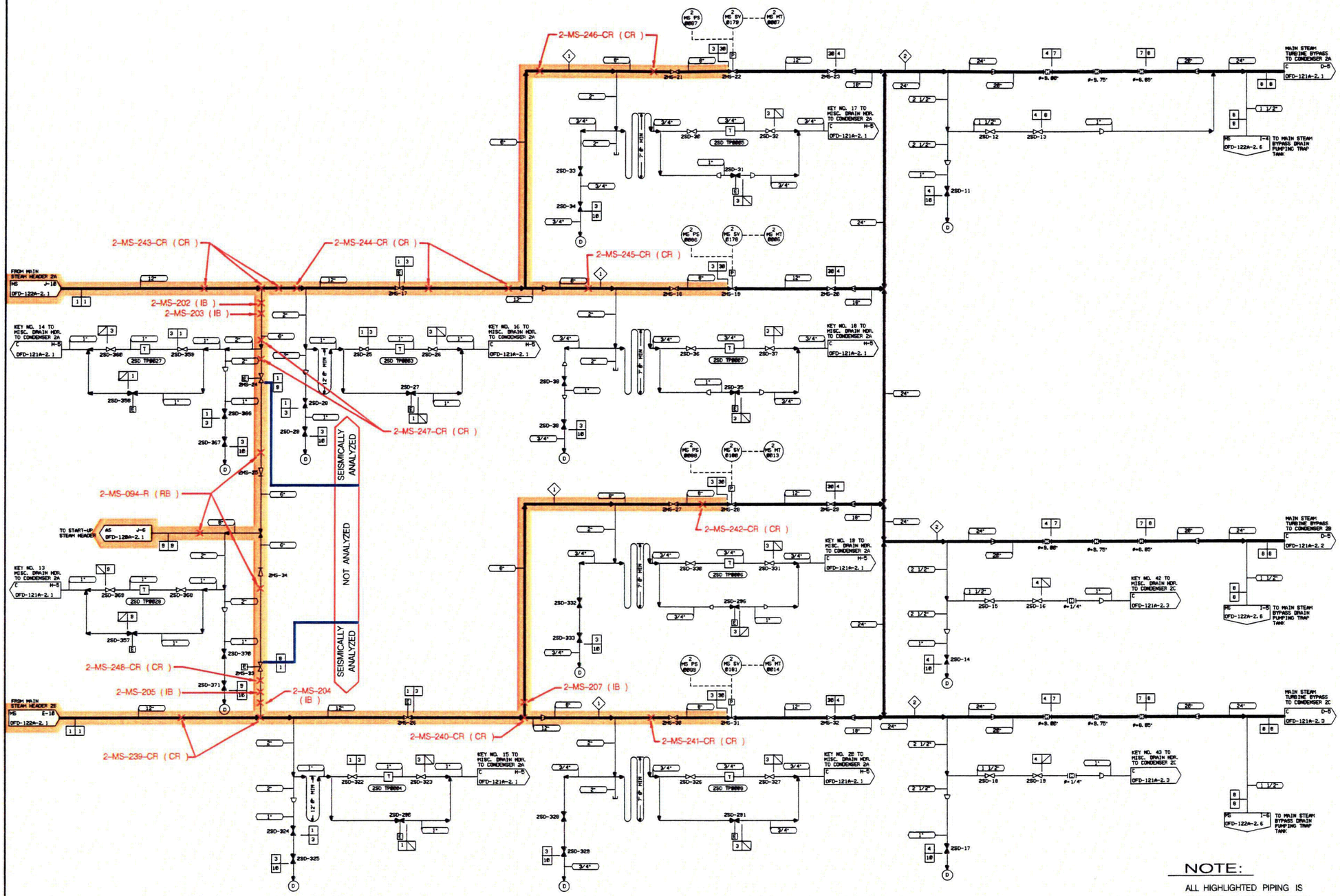

LEGEND

- High Energy Piping (Unit 1)
- High Energy Piping (Unit 2)
- High Energy Piping (Unit 3)
- X – High Energy Line Break Location
- N-SYS-NNN (-N) – Break Number
- TE – Terminal End (Break)
- RB – Running Break
- CR – Critical Crack
- IB – Intermediate Break
- Running Break Boundary

NOTE:

ALL HIGHLIGHTED PIPING IS ANALYZED EXCEPT AS NOTED.

UNIT 2

FIGURE 5.1–8
MAIN STEAM SYSTEM

High Energy Lines, Piping Configurations, Boundaries, Break Locations and Numbers

(Sheet 4 of 11)

THIS DIAGRAM IS FOR HIGH ENERGY LINE BREAK PURPOSES ONLY.
REFERENCE FLOW DIAGRAM OFD–122A–2.2 FOR COMPLETE SYSTEM DESIGN INFORMATION.

HELB–122A–02–02

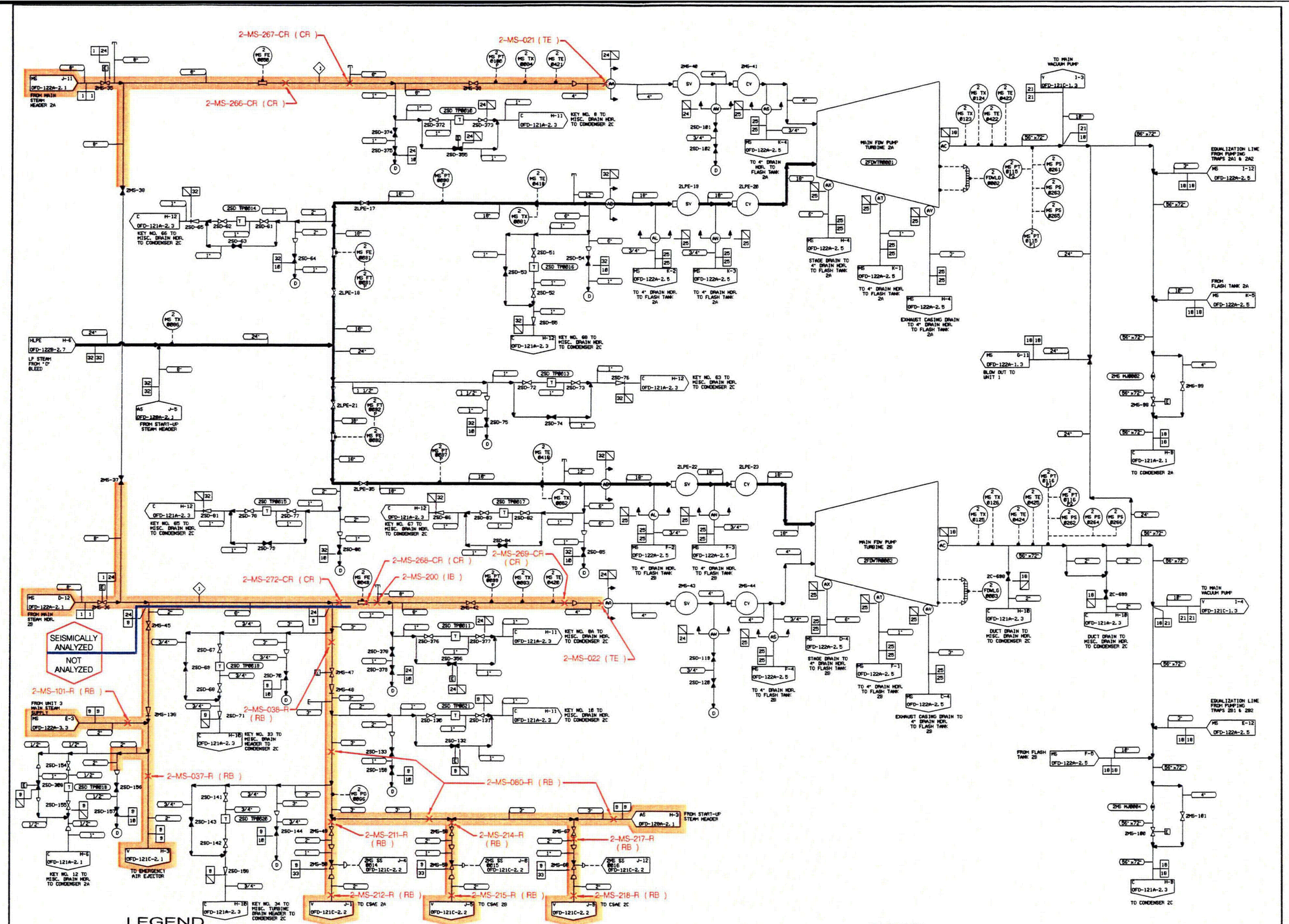

LEGEND

- High Energy Piping (Unit 1)
- High Energy Piping (Unit 2)
- High Energy Piping (Unit 3)
- X – High Energy Line Break Location
- N-SYS-NNN (-N) – Break Number
- TE – Terminal End (Break)
- RB – Running Break
- CR – Critical Crack
- IB – Intermediate Break
- Running Break Boundary

NOTE:

ALL HIGHLIGHTED PIPING IS ANALYZED EXCEPT AS NOTED.

FIGURE 5.1–8
MAIN STEAM SYSTEM

High Energy Lines, Piping Configurations, Boundaries, Break Locations and Numbers

(Sheet 5 of 11)

THIS DIAGRAM IS FOR HIGH ENERGY LINE BREAK PURPOSES ONLY.
REFERENCE FLOW DIAGRAM OFD-122A-2.3 FOR COMPLETE SYSTEM DESIGN INFORMATION.

HELB–122A–02–03

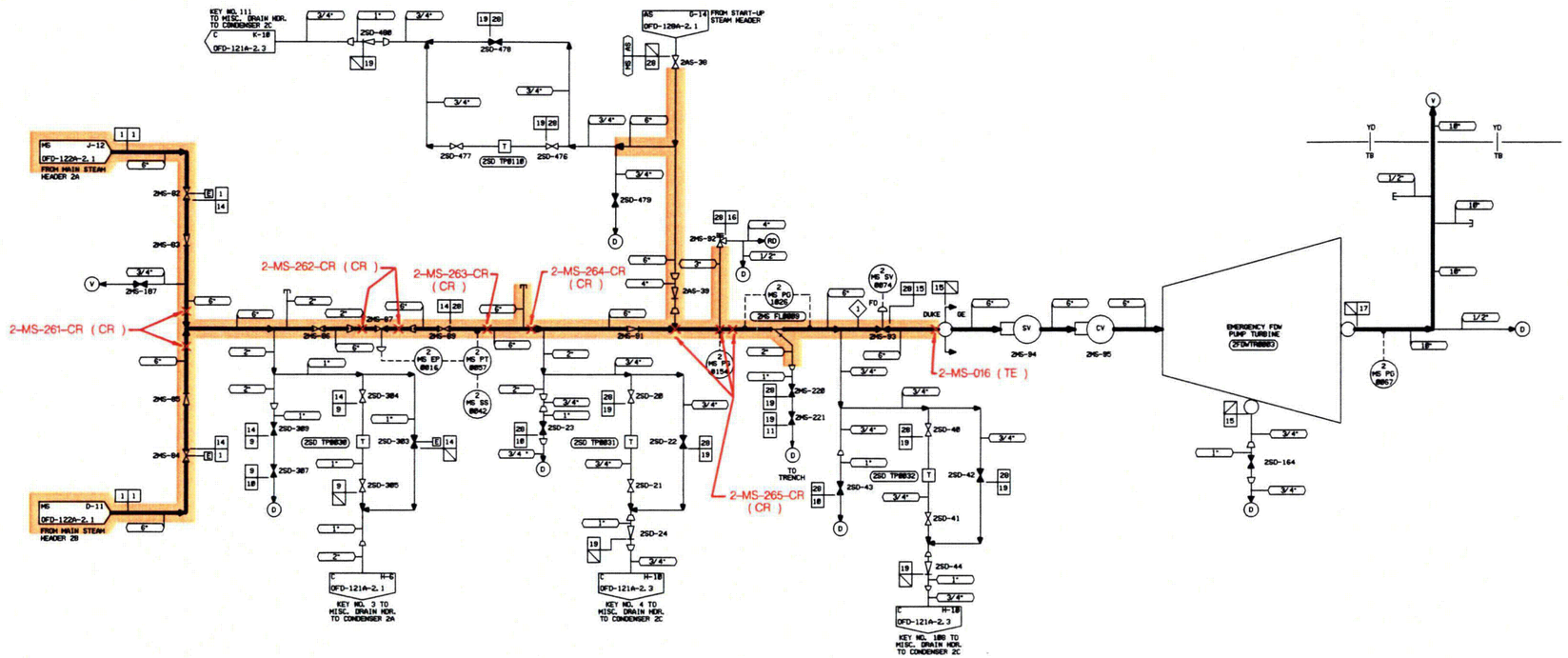

LEGEND

- High Energy Piping (Unit 1)
- High Energy Piping (Unit 2)
- High Energy Piping (Unit 3)
- X – High Energy Line Break Location
- N-SYS-NNN (-N) – Break Number
- TE – Terminal End (Break)
- RB – Running Break
- CR – Critical Crack
- IB – Intermediate Break
- Running Break Boundary

FIGURE 5.1–8
MAIN STEAM SYSTEM

High Energy Lines, Piping Configurations, Boundaries, Break Locations and Numbers
(Sheet 6 of 11)

UNIT 2

THIS DIAGRAM IS FOR HIGH ENERGY LINE BREAK PURPOSES ONLY.
REFERENCE FLOW DIAGRAM OFD–122A–2.4 FOR COMPLETE SYSTEM DESIGN INFORMATION.

HELB–122A–02–04

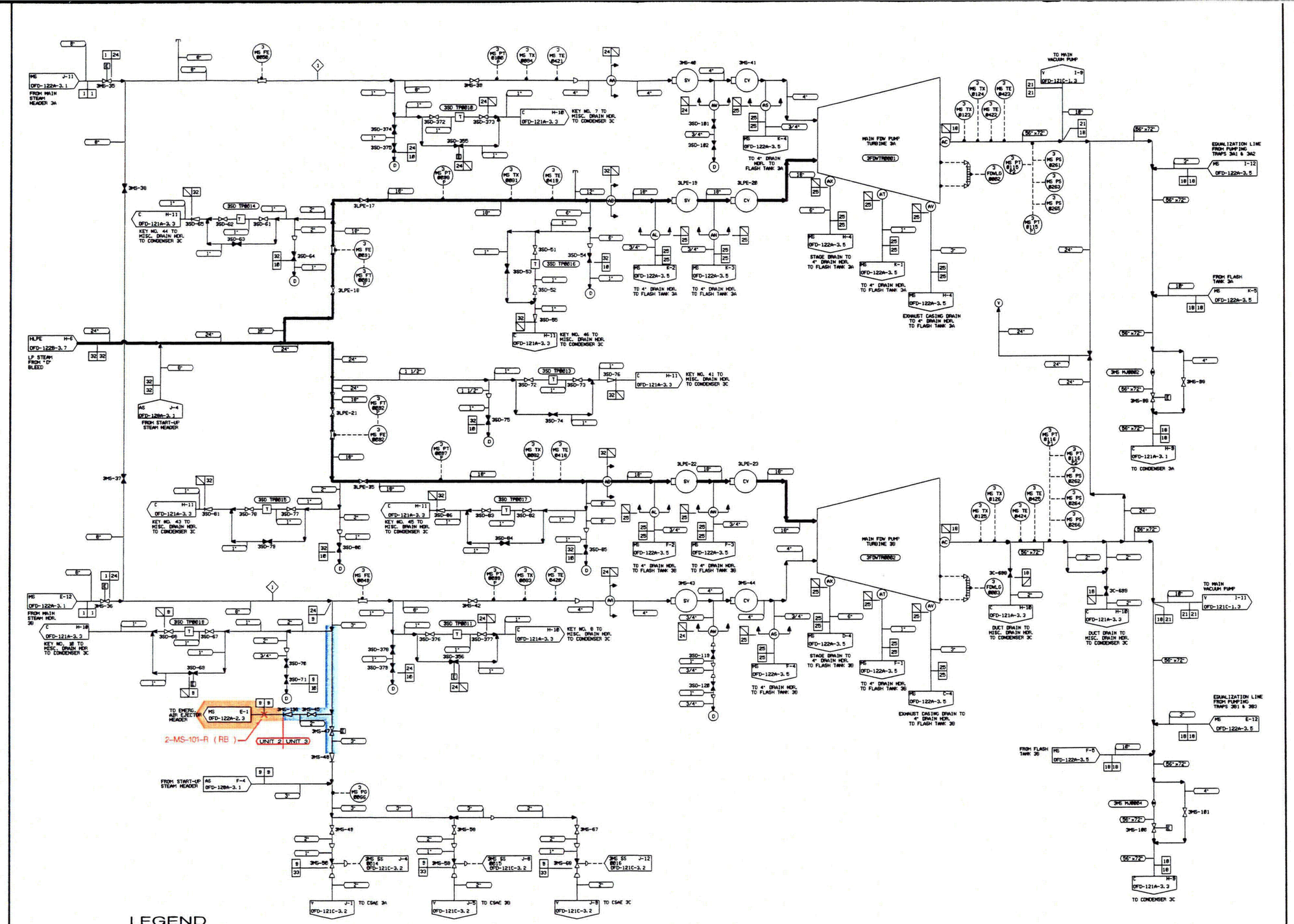

LEGEND

- High Energy Piping (Unit 1)
- High Energy Piping (Unit 2)
- High Energy Piping (Unit 3)
- X – High Energy Line Break Location
- N-SYS-NNN (-N) – Break Number
- TE – Terminal End (Break)
- RB – Running Break
- CR – Critical Crack
- IB – Intermediate Break
- Running Break Boundary

FIGURE 5.1–8
MAIN STEAM SYSTEM

High Energy Lines, Piping Configurations, Boundaries, Break Locations and Numbers

(Sheet 7 of 11)

THIS DIAGRAM IS FOR HIGH ENERGY LINE BREAK PURPOSES ONLY.
REFERENCE FLOW DIAGRAM OFD-122A-3.3 FOR COMPLETE SYSTEM DESIGN INFORMATION.

HELB–122A–03–03

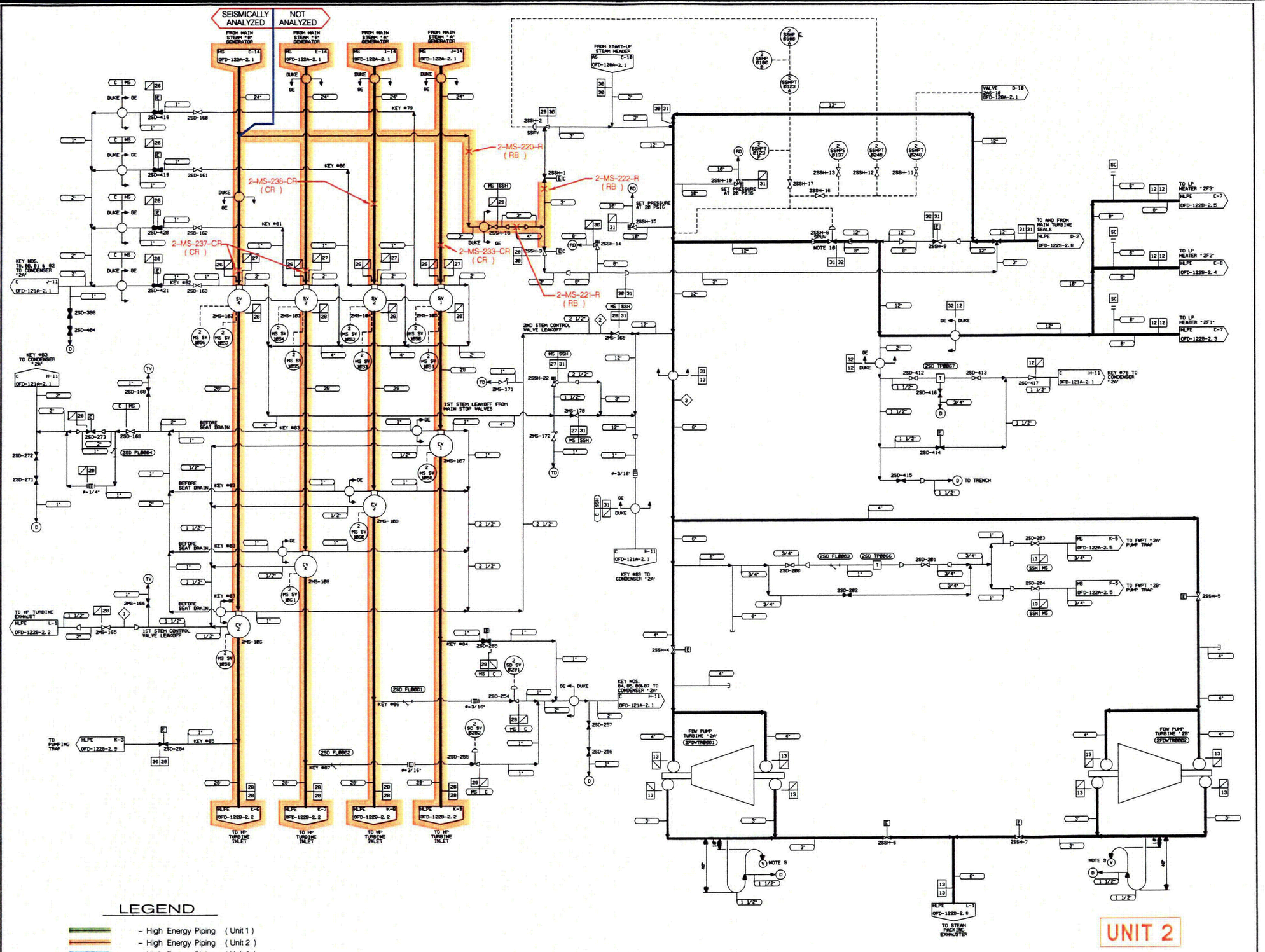

LEGEND

- High Energy Piping (Unit 1)
- High Energy Piping (Unit 2)
- High Energy Piping (Unit 3)
- X – High Energy Line Break Location
- N-SYS-NNN (-N) – Break Number
- TE – Terminal End (Break)
- RB – Running Break
- CR – Critical Crack
- IB – Intermediate Break
- Running Break Boundary

FIGURE 5.1–8
MAIN STEAM SYSTEM

High Energy Lines, Piping Configurations, Boundaries, Break Locations and Numbers

(Sheet 8 of 11)

NOTE:

ALL HIGHLIGHTED PIPING IS ANALYZED EXCEPT AS NOTED.

THIS DIAGRAM IS FOR HIGH ENERGY LINE BREAK PURPOSES ONLY.
REFERENCE FLOW DIAGRAM OFD-122B-2.1 FOR COMPLETE SYSTEM DESIGN INFORMATION.

HELB–122B–02–01

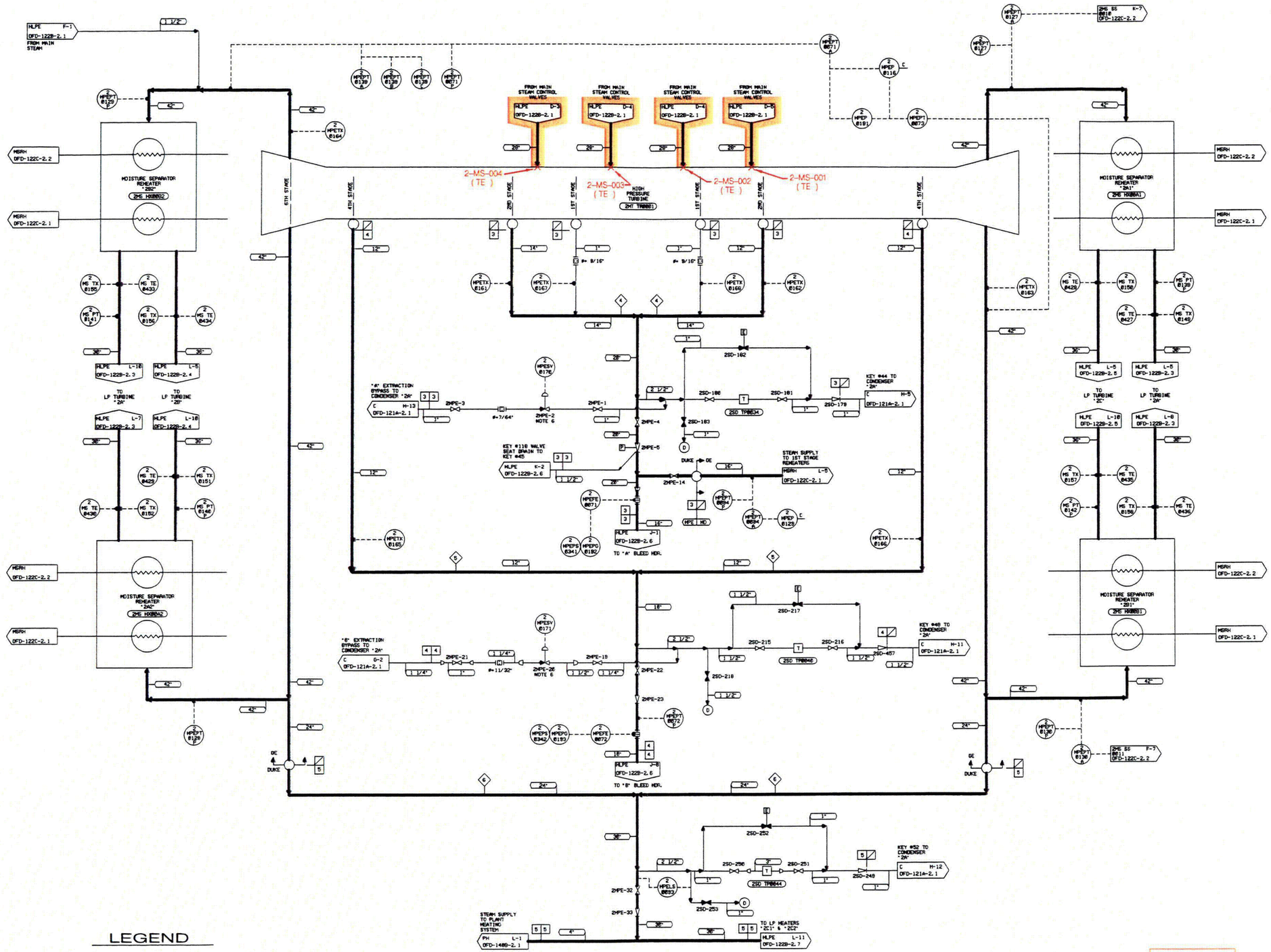

LEGEND

- High Energy Piping (Unit 1)
- High Energy Piping (Unit 2)
- High Energy Piping (Unit 3)
- X – High Energy Line Break Location
- N-SYS-NNN (-N) – Break Number
- TE – Terminal End (Break)
- RB – Running Break
- CR – Critical Crack
- IB – Intermediate Break
- Running Break Boundary

FIGURE 5.1-8
MAIN STEAM SYSTEM

High Energy Lines, Piping Configurations, Boundaries, Break Locations and Numbers

(Sheet 9 of 11)

UNIT 2

THIS DIAGRAM IS FOR HIGH ENERGY LINE BREAK PURPOSES ONLY.
REFERENCE FLOW DIAGRAM OFD-122B-2.2 FOR COMPLETE SYSTEM DESIGN INFORMATION.

HELB-122B-02-02

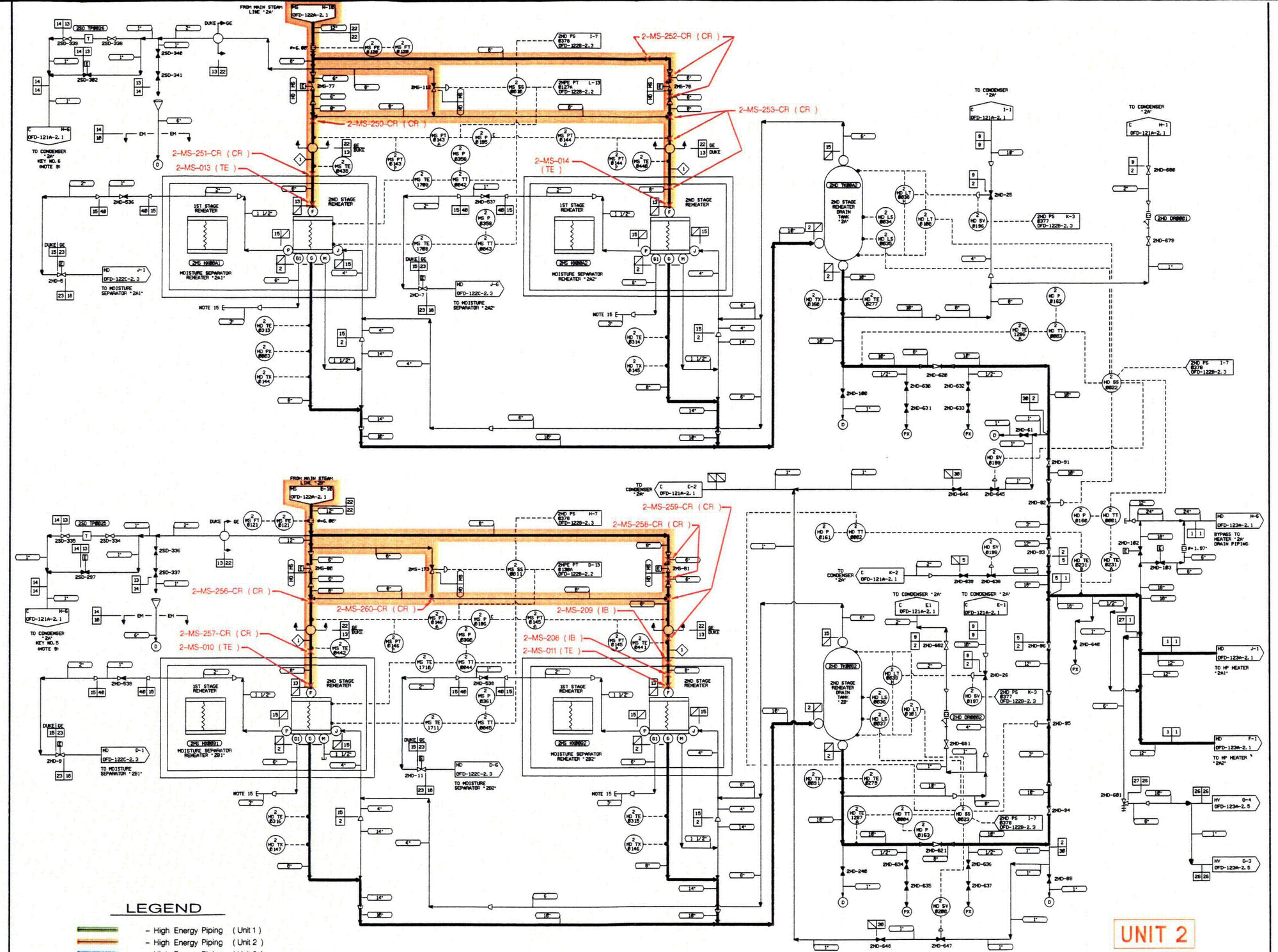

LEGEND

- High Energy Piping (Unit 1)
- High Energy Piping (Unit 2)
- High Energy Piping (Unit 3)

X – High Energy Line Break Location
N-SYS-NNN (-N) – Break Number
TE – Terminal End (Break)
RB – Running Break
CR – Critical Crack
IB – Intermediate Break
– Running Break Boundary

FIGURE 5.1–8
MAIN STEAM SYSTEM

High Energy Lines, Piping Configurations, Boundaries, Break Locations and Numbers
(Sheet 10 of 11)

THIS DIAGRAM IS FOR HIGH ENERGY LINE BREAK PURPOSES ONLY.
REFERENCE FLOW DIAGRAM OFD-122C-2.2 FOR COMPLETE SYSTEM DESIGN INFORMATION.

HELB–122C–02–02

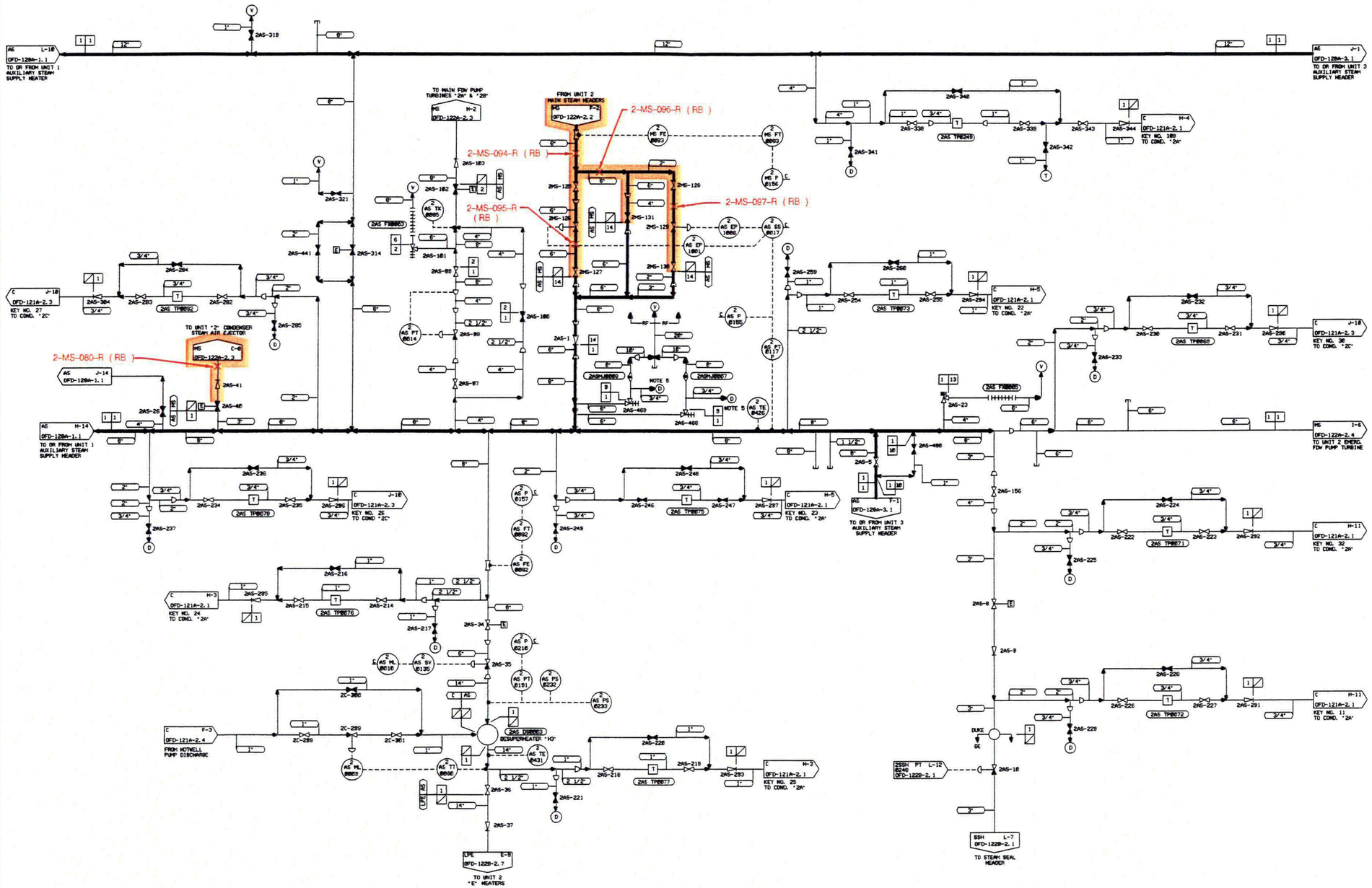

LEGEND

- High Energy Piping (Unit 1)
- High Energy Piping (Unit 2)
- High Energy Piping (Unit 3)
- X – High Energy Line Break Location
- N-SYS-NNN (-N) – Break Number
- TE – Terminal End (Break)
- RB – Running Break
- CR – Critical Crack
- IB – Intermediate Break
- Running Break Boundary

FIGURE 5.1–8
MAIN STEAM SYSTEM

High Energy Lines, Piping Configurations, Boundaries, Break Locations and Numbers

(Sheet 11 of 11)

UNIT 2

THIS DIAGRAM IS FOR HIGH ENERGY LINE BREAK PURPOSES ONLY.
REFERENCE FLOW DIAGRAM OFD-128A-2.1 FOR COMPLETE SYSTEM DESIGN INFORMATION.

HELB–128A–02–01