NUREG-0635

Generic Evaluation of Feedwater Transients and Small Break Loss-of-Coolant Accidents in Combustion Engineering Designed Operating Plants

Office of
Nuclear Reactor Regulation

U.S. Nuclear Regulatory
Commission

Available from

GPO Sales Program
Division of Technical Information and Document Control
U.S. Nuclear Regulatory Commission
Washington, D.C. 20555

and

National Technical Information Service
Springfield, Virginia 22161

NUREG-0635

Generic Evaluation of Feedwater Transients and Small Break Loss-of-Coolant Accidents in Combustion Engineering Designed Operating Plants

Manuscript Completed: January 1980
Date Published: January 1980

Bulletins and Orders Task Force
Office of Nuclear Reactor Regulation
U.S. Nuclear Regulatory Commission
Washington, D.C. 20555

ABSTRACT

This report summarizes the results of our generic evaluation of feedwater transients, small break LOCAs, and other TMI-2-related events for the Combustion Engineering-designed operating plants, and confirms the bases for their continued operation. The results of this evaluation are presented in this report in the form of a set of findings and recommendations in each of the principal review areas.

TABLE OF CONTENTS

	Page
ABSTRACT	iii
ACKNOWLEDGEMENT	xi
SUMMARY AND CONCLUSIONS	xii
1. INTRODUCTION	1-1
1.1 Background	1-1
1.2 Bulletins & Orders Task Force	1-1
1.2.1 Charter	1-3
1.2.2 Scope of Activities	1-3
1.2.3 Summary of Activities	1-5
1.3 Conclusions	1-8
2. INSPECTION AND ENFORCEMENT BULLETINS (TMI-2)	2-1
2.1 General	2-1
2.2 Actions Required by IE Bulletins	2-1
2.2.1 Review Actions	2-1
2.2.2 Changes to Plant Design Features and Operating Procedures	2-3
2.2.3 Evaluation of Licensee Responses to IE Bulletins	2-6
3. GENERAL FINDINGS AND RECOMMENDATIONS	3-1
3.1 Auxiliary Feedwater Systems	3-4
3.1.1 Summary	3-4
3.1.2 Recommendation Categories	3-5
3.1.3 Short-Term Generic Recommendations	3-6
3.1.4 Additional Short-Term Recommendations	3-9
3.1.5 Long-Term Generic Recommendations	3-11
3.1.6 Plant-Specific AFW System Recommendations	3-13
3.2 Analysis	3-13
3.2.1 Confirmation of Small-Break LOCA Analysis Methods (Appendix K and 50.46 Requirements)	3-13

TABLE OF CONTENTS (Continued)

Page

3.2.2 Role of Nonsafety Equipment in Mitigating Small-Break LOCAs 3-14
3.2.3 Michelson Concerns 3-15
3.2.4 PORV Failures in CE Plants 3-16
3.2.5 Audit Calculations 3-17

3.3 Operator Training 3-18

3.3.1 Expanded Use of Simulators in Training 3-18

3.4 Operating Procedures 3-20

3.4.1 Review of Procedures (NRC) 3-21
3.4.2 Review of Procedures (NSSS Vendors) 3-21
3.4.3 Symptom-Based Emergency Procedures 3-21

3.5 Human Factors 3-22

3.5.1 Monitoring Control Board and Other Instruments 3-22

APPENDIX I PLANT COMPARISONS I-1

1. General I-1
2. ECCS Challenges I-8

APPENDIX II MAIN FEEDWATER SYSTEMS IN CE-DESIGNED PLANTS II-1
APPENDIX III AUXILIARY FEEDWATER SYSTEMS III-1

1. Introduction III-1
2. Purpose and Description of Auxiliary Feedwater System III-3
3. Deterministic Evaluation III-3

3.1 Background and Objectives III-3

4. Reliability Evaluation III-8

4.1 Background and Objectives III-8
4.2 Reliability Assessment Approach and Scope III-9

4.2.1 Loss of Main Feedwater III-9
4.2.2 Loss of Main Feedwater Due to Loss of Offsite Power III-9

TABLE OF CONTENTS (Continued)

	Page
4.2.3 Loss of Main Feedwater and Loss of All Alternating Current Power (Station ac Blackout)	III-10
4.3 Generic Event Trees	III-10
4.4 Fault Tree Logic Approach	III-12
4.5 Data Base and Application	III-12
4.6 Summary of Reliability-Based Results (Generic)	III-18
4.6.1 Loss of Main Feedwater (First Column, Figure III-4)	III-20
4.6.2 Loss of Main Feedwater and Loss of Offsite Power (Second Column, Figure III-4)	III-21
4.6.3 Loss of Main Feedwater and Loss of All Alternating Current Power (Station ac Blackout) (Third Column, Figure III-4)	III-21
4.7 Reliability Characterizations for AFW Systems in Plants Using Combustion Engineering Designed Reactors (Plant-Specific)	III-22
5. Summary of Results and Recommendations	III-24
5.1 Recommendation Categories	III-24
5.2 Short-Term Generic Recommendations	III-25
5.2.1 Technical Specification Time Limit on AFW System Train Outage	III-25
5.2.2 Technical Specification Administrative Controls on Manual Valves - Lock and Verify Position	III-25
5.2.3 AFW System Flow Throttling - Water Hammer	III-26
5.2.4 Emergency Procedures for Initiating Backup Water Supplies	III-26
5.2.5 Emergency Procedures for Initiating AFW Flow Following a Complete Loss of Alternating Current Power	III-27
5.2.6 AFW System Flow Path Verification	III-27
5.2.7 Nonsafety-Grade, Nonredundant AFW System Automatic Initiation Signals	III-28
5.2.8 Automatic Initiation of AFW Systems	III-29

TABLE OF CONTENTS (Continued)

		Page
	5.3 Additional Short-Term Recommendations	III-29
	5.3.1 Primary AFW Water Source/Low-Level Alarm	III-30
	5.3.2 AFW Pump Endurance Test	III-30
	5.3.3 Indication of AFW Flow to the Steam Generators	III-30
	5.3.4 AFW System Availability During Periodic Surveillance Testing	III-31
	5.4 Long-Term Generic Recommendations	III-31
	5.4.1 Automatic Initiation of AFW Systems	III-31
	5.4.2 Single Valves in the AFW System Flow Path	III-31
	5.4.3 Elimination of AFW System Dependency on Alternating Current Power Following a Complete Loss of Alternating Current Power	III-32
	5.4.4 Prevention of Multiple Pump Damage Due to Loss of Suction Resulting from Natural Phenomena	III-32
	5.4.5 Nonsafety-Grade, Nonredundant AFW System Automatic Initiation Signals	III-32
APPENDIX IV	CONTROL SYSTEMS	IV-1
	1. Introduction	IV-1
	2. Pressurizer Level	IV-3
	3. Pressurizer-Pressure Control System	IV-5
	4. Steam Generator Water Level	IV-7
	5. Steam Generator Shell Side Relief	IV-7
APPENDIX V	SAFETY SYSTEMS	V-1
	1. Neutron Flux (Wide Range Logarithmic Channels)	V-2
	2. Neutron Flux (Power Range Safety Channels)	V-2
	3. Reactor Coolant System Flow	V-2
	4. Steam Generator Level (Low)	V-3
	5. Steam Generator Level (High)	V-3
	6. Steam Generator Pressure (Low)	V-3
	7. Pressurizer Pressure (High)	V-4
	8. Loss of Turbine	V-4
	9. Containment Pressure (High)	V-4

TABLE OF CONTENTS (Continued)

		Page
	10. Thermal Margin/Low Pressure	V-5
	11. Local Power Density (High)	V-5
	12. Manual Trip	V-6
	13. Engineered Safety Features Actuation System	V-6
APPENDIX VI	PRESSURIZER POWER-OPERATED RELIEF VALVES AND SAFETY VALVES	VI-1
	1. Power-Operated Relief Valve Considerations	VI-1
	2. Design	VI-1
	3. Performance	VI-2
	4. Loss-of-Load Transient	VI-6
	5. Rod Withdrawal Transient	VI-7
	6. Accidents Which Lift PORVs	VI-7
	7. Alternatives Considered to Reduce Challenges to the PORVs	VI-7
	8. Liquid and Two-Phase Relief	VI-9
	9. Conclusions	VI-10
APPENDIX VII	NATURAL CIRCULATION IN CE PLANTS	VII-1
	1. Natural Circulation Testing	VII-1
	2. Primary System Pressure Control	VII-4
	3. Natural Circulation Cooling During Loss of Main Feedwater	VII-7
	4. Natural Circulation Cooling During Loss of Offsite Power	VII-7
	5. Natural Circulation Cooling During Station Blackout	VII-8
	6. Natural Circulation Following Small LOCA	VII-10
	7. Natural Circulation Operator Guidelines	VII-11
	8. References	VII-15
APPENDIX VIII	ANALYSIS	VIII-1
	1. Introduction	VIII-1
	2. Conclusions and Recommendations	VIII-2
	3. Expected Frequency of Small LOCAs	VIII-7
	3.1 Introduction	VIII-7
	3.2 Data from Operating Reactors	VIII-7
	3.3 Evaluation of Anticipated Transients	VIII-9
	3.4 Plant Modifications to Prevent PORV Challenges	VIII-10
	3.5 Conclusions and Recommendations	VIII-10

TABLE OF CONTENTS (Continued)

	Page
4. Expected Consequences of Small LOCAs	VIII-13
4.1 TVA Small Break Concerns	VIII-13
4.1.1 Background	VIII-13
4.1.2 Pressurizer Level as a Correct Indication of Water Level in the Core	VIII-14
4.1.3 Small Break Isolation	VIII-15
4.1.4 Break Enthalpy is Not Core Exit Enthalpy	VIII-16
4.1.5 Recirculation Mode of HPI (High Pressure Safety Injection) Operation at High Pressures Not an Established Design Requirement; also, Minimum Flow Protection for HPI Pumps During the Recirculating Mode of Operation	VIII-17
4.1.6 Use of HPI Pumps with Shutdown Cooling System	VIII-18
4.1.7 Initiation of Containment Spray	VIII-19
4.1.8 Reactor Vessel Coolant Level Unknown to Operators/Adequacy of Emergency Operating Procedures	VIII-20
4.1.9 Long-Term Source of Auxiliary Feedwater	VIII-21
4.1.10 Pressure Boundary Damage Due to Bubble Collapse	VIII-21
4.1.11 Mechanical Effects of Slug Flow on Tubes	VIII-25
4.1.12 Effect of Safety Injection Tank Discharge/Noncondensible Gas Accumulation in the System	VIII-26
4.1.13 Pump and/or Pump Seal Damage/Continuous Operation of Pumps	VIII-27
4.1.14 Conclusions	VIII-27
4.1.15 Recommendations	VIII-28
4.2 Small Break LOCA Analysis	VIII-29
4.2.1 Analytical Model	VIII-29
4.2.2 Vendor Small Break LOCA Calculations	VIII-44
4.2.3 Plant Simulators	VIII-56
4.2.4 Staff Audit Calculations	VIII-56
4.2.5 Two-Phase Natural Circulation and Accommodation of Loss of All Feedwater	VIII-68

TABLE OF CONTENTS (Continued)

		Page
APPENDIX IX	OPERATOR TRAINING AND OPERATING PROCEDURE CONSIDERATIONS.....	IX-1
	1. Training.....	IX-1
	1.1 Finding (previously stated in NUREG-0560).....	IX-1
	1.2 Recommendations.....	IX-2
	2. Operating Procedures.....	IX-2
	2.1 Background.....	IX-2
	2.2 Findings.....	IX-3
APPENDIX X	PLANT-SPECIFIC AUXILIARY FEEDWATER SYSTEMS.....	X-1
	1. Introduction.....	X-1
	2. Operating Plants with CE-Designed Nuclear Steam Supply Systems.....	X-1
	3. Plant-Specific Evaluations.....	X-2
	Annex 1 to Appendix X.....	X-124

ACKNOWLEDGEMENT

In addition to the members of the Bulletins and Orders Task Force (the Task Force organization is shown in Figure 1-1 of Chapter 1 of this report), other NRC staff members from the Offices of Nuclear Reactor Regulation and Nuclear Regulatory Research contributed to the evaluation documented in this report. They are identified below.

Office of Nuclear Reactor Regulation

A. Bennett
J. Calvo
R. Giardina
C. Graves
V. Leung
S. Newberry
L. Riani
R. Scholl
A. Thadani
J. Wermiel

Office of Nuclear Regulatory Research

M. Cunningham
M. Taylor

A. Thadani coordinated the preparation of the first draft of this report, assisted by I. Villalva and P. O'Reilly. I. Villalva was responsible for the coordination of subsequent drafts; T. Cox and W. Kane compiled the final version.

The secretarial staff of the Bulletins and Orders Task Force, particularly Linda Kreise Janet Keefe, Carole Jamerson, Margaret Farr, Wanda Wood, Cherrill Covington and Lois Miller provided much-appreciated typing and proofreading support. The Phillips Building CRESS Unit typed the numerous drafts of the report.

SUMMARY AND CONCLUSIONS

The accident at Three Mile Island Unit 2 (TMI-2) on March 28, 1979 involved a main feedwater transient coupled with a small break in the reactor coolant system and a temporary failure of the auxiliary feedwater system. The resulting severity of the ensuing events and the potential generic aspects of the accident on other operating reactors led the NRC to initiate prompt action to (a) assure that other reactor licensees, particularly those with plants similar in design to TMI-2, took the necessary action to substantially reduce the likelihood for TMI-2 type events and, (b) investigate the potential generic implications of this accident on other operating reactors.

The Bulletins & Orders Task Force was established within the NRC Office of Nuclear Reactor Regulation (NRR) in early May 1979 and discontinued operations on December 31, 1979. This task force was responsible for reviewing and directing the TMI-2-related staff activities in the NRC Office of Inspection and Enforcement (IE) Bulletins, Commission Orders and generic evaluations of loss of feedwater transients and small break loss-of-coolant accidents (LOCAs) for all operating reactors to assure their continued safe operation.

This report summarizes the results of the Bulletins & Orders Task Force generic evaluation of feedwater transients, small break loss-of-coolant accidents, and other TMI-2 related events in Combustion Engineering (CE)-designed operating plants and to establish or confirm the bases for their continued operation. The results of this evaluation are presented in this report in the form of a set of findings and recommendations in each of the principal review areas.

The B&OTF generic review of the CE-designed operating plants has resulted in the following conclusions:

(1) The continued operation of the plants is acceptable provided that those actions related to the plants design and operation, and training of operators identified in this report are implemented consistent with the recommended implementation schedules.

(2) The actions taken by the licensees in response to IE Bulletins 79-06B and 79-06C, including the actions specified in NUREG-0623, "Generic Assessment of Delayed Reactor Coolant Pump Trip During Small Break Loss-of-Coolant Accidents in Pressurized Water Reactors," provide added assurance for the protection of the health and safety of the public.

In addition, the Bulletins & Orders Task Force has independently confirmed the safety significance of those related short-term and long-term actions recommended by other NRR task forces as discussed in this report.

1. INTRODUCTION

1.1 Background

The accident at Three Mile Island Unit 2 (TMI-2) on March 28, 1979 involved a main feedwater transient coupled with a small break in the reactor coolant system and a temporary failure of the auxiliary feedwater system. The resulting severity of the ensuing events and the potential generic aspects of the accident on other operating reactors led the NRC to initiate prompt action to (a) assure that other reactor licensees, particularly those with plants similar in design to TMI-2, took the necessary action to substantially reduce the likelihood for TMI-2-type events, and (b) start comprehensive investigations into the potential generic implications of this accident on other operating reactors.

The purpose of this report is to summarize the results of our generic evaluation of feedwater transients, small break loss-of-coolant accidents (LOCAs), and other TMI-2-related events in the Combustion Engineering (CE)-designed operating plants (see Table 1-1) and to establish or confirm the bases for their continued operation. The results of this evaluation are presented in this report in the form of a set of findings and recommendations in each of the principal review areas.

1.2 Bulletins & Orders Task Force

The Bulletins & Orders Task Force (B&OTF) was established within the Office of Nuclear Reactor Regulation (NRR) in early May 1979 and discontinued operations on December 31, 1979. The B&OTF was responsible for reviewing and directing the TMI-2-related staff activities on loss of feedwater transients and small break loss-of-coolant accidents for all operating reactors to assure their continued safe operation. In conducting this activity, the B&OTF concentrated its efforts on assessment of systems reliability, the review of the analytical predictions of plant performance for both feedwater transients and small break LOCAs, evaluations of generic operating guidelines, the review of emergency plant operating procedures, and the review of operator training.

The B&OTF worked directly with operating plant licensees on plant-specific matters. For the review of generic matters, a working relationship was established with owners groups for plants designed by each nuclear steam supply vendor (Babcock & Wilcox, Westinghouse, Combustion Engineering, and General Electric) and in some cases with the individual nuclear steam supply system vendors. At the outset, the highest priority was placed on plants of the Babcock & Wilcox (B&W) design; as short-term actions on these plants were completed, priority was shifted to other pressurized water reactor (PWR) plants manufactured by Westinghouse (W) and Combustion Engineering (CE), and then to boiling water reactors (BWRs), a significantly different light water reactor

TABLE 1-1

SUMMARY OF OPERATING PWRS WITH COMBUSTION ENGINEERING-DESIGNED NUCLEAR STEAM SUPPLY SYSTEMS

PLANT NAME	UTILITY	POWER LEVEL (MWt)	OPERATING LICENSE ISSUANCE DATE
Palisades	Consumers Power Company	2530	10/16/72
Maine Yankee	Maine Yankee Atomic Power Company	2630	6/29/73
Fort Calhoun 1	Omaha Public Power District	1420	8/09/73
Calvert Cliffs 1	Baltimore Gas and Electric Company	2700	7/31/74
Millstone 2	Northeast Nuclear Energy Company	2560	8/01/75
St. Lucie 1	Florida Power and Light Company	2560	3/01/76
Calvert Cliffs 2	Baltimore Gas & Electric Company	2700	11/30/76
Arkansas 2	Arkansas Power & Light Company	2815	9/01/78

type. All BWRs incorporated nuclear steam supply systems (NSSS) designed by the General Electric Company except for one plant, LaCrosse, whose NSSS was designed by Allis Chalmers.

The B&OTF was composed of approximately 30 technical professionals in widely varying disciplines and areas of expertise. The Director of the B&OTF was Dr. D. F. Ross, Jr. and the Deputy Director was Mr. T. M. Novak. The B&OTF organization is shown in Figure 1-1.

Section 1.2.3 of this report summarizes the B&OTF activities regarding to evaluation of responses to the Office of Inspection and Enforcement (IE) Bulletins, issuance and subsequent lifting of Orders issued to licensees with Babcock & Wilcox-designed operating reactors, and evaluation of the system reliability and predicted plant performance for the designs of each of the other reactor vendors with regard to feedwater transients and small-break loss-of-coolant accidents.

1.2.1 Charter

The charter of the B&OTF was to review the generic implications of the TMI-2 accident for all operating plants to confirm or establish the bases for their continued safe operation. The end products for this task included:

(1) Safety evaluations and authorizations to resume or continue operations.

(2) Licensing positions regarding the implementation of short-term measures on operating light water reactor plants.

(3) Recommendations for further improvements in the areas of design and operation and administrative procedures.

(4) Notification of the Lessons Learned Task Force* of any required actions identified during the B&OTF review.

1.2.2 Scope of Activities

The scope of the B&OTF activities was limited to the review of the loss of feedwater transient and the small break loss-of-coolant events. The specific areas of review related to these events included:

(1) Reliability of systems.

* The Lessons Learned Task Force was also formed in NRR in response to the TMI-2 accident to identify and evaluate those safety concerns originating with the TMI-2 accident that required licensing actions (beyond those that had been specified in IE Bulletins and Commission Orders) for currently operating reactors, as well as for pending operating license and construction permit applications. For this reason, the scope of the Lessons Learned Task Force was more general than the scope of the B&OTF.

Figure 1-1

BULLETINS & ORDERS TASK FORCE ORGANIZATION

D. F. Ross, Jr., Director
T. M. Novak, Deputy Director

Projects Group*	Systems Group		Analysis Group
W. Kane, Group Leader	S. Israel, Group Leader		Z. Rosztoczy, Group Leader
I. Villalva, Alternate	Section A	Section B	P. Norian, Alternate
P. O'Reilly	G. Mazetis, Section Leader	P. Matthews, Section Leader	R. Audette
C. Thomas			B. Sheron
R. Capra	F. Ashe	W. Hodges	W. Jensen
J. Lee, Licensing Assistant	W. LeFave	J. Joyce	E. Throm
	G. Kelly	C. Liang	J. Guttman
	M. Rubin	N. Wagner	R. Frahm
	K. Mahan	B. Seigel	
	D. Thatcher	T. Greene	
		B. Wilson	

*C.J. Heltemes, Jr., served as group leader of the Projects Group until late September 1979.

(2) Analyses.

(3) Guidelines for the preparation of emergency operating procedures.

(4) Training of operators in emergency operating procedures.

In conducting its activities, the B&OTF had an overlapping responsibility with four of the short-term recommendations made by the Lessons Learned Task Force. These recommendations are as indicated below:

(1) Item 2.1.3b (Part 1 only)	-	Instrumentation for Inadequate Core Cooling (Develop Procedures and Describe Existing Instrumentation)
(2) Item 2.1.7a	-	Auto Initiation of Auxiliary Feed
(3) Item 2.1.7b	-	Auxiliary Feed Flow Indication
(4) Item 2.1.9	-	Transient and Accident Analysis

These items are described in detail in NUREG-0578, "TMI-2 Lessons Learned Task Force Status and Short-Term Recommendations." The B&OTF reviewed licensee responses to these short-term Lessons Learned items. This was done since these requirements were identified in the generic reviews which were conducted by the B&OTF.

1.2.3 Summary of Activities

Bulletins

The staff in its preliminary review of the TMI-2 accident identified several errors and malfunctions that occurred during the accident and contributed significantly to its severity. As a result, all holders of operating licenses were subsequently instructed to take a number of immediate actions to avoid repetition of these errors. These instructions were specified in a series of bulletins issued by the Commission's Office of Inspection and Enforcement (IE).

The initial bulletins defined actions to be taken by licensees of operating plants using a Babcock & Wilcox-designed nuclear steam supply system. As staff evaluation continued, it was determined that additional actions were necessary and these bulletins were subsequently expanded, clarified, and issued to all operating plants for action. For example, holders of operating licenses for Babcock & Wilcox-designed reactors were instructed by IE Bulletins to take further actions, including immediate changes to decrease the reactor high pressure trip point and to increase the pressurizer power-operated relief valve setpoints.

The B&OTF directed the evaluations of each licensee's response to the IE Bulletins. This evaluation process involved an inter-office review group, which included representatives from IE and from the NRR Division of Operating Reactors. When it was concluded that a licensee understood the concerns expressed in the bulletins and provided an acceptable response to the bulletins, the bulletin review was completed and the evaluation issued as a staff report.

The prompt actions taken by licensees in responding to the IE Bulletins was considered to be an important contributor to assuring continued safe plant operation. In addition, the bulletins and related evaluations provided substantive input to other staff activities, such as those associated with the B&OTF generic evaluations and the Lessons Learned Task Force. Thus, many of the subjects addressed by the bulletins were studied in greater depth through other staff activities and studies. Further, the bulletins and the associated responses were used as bases for inspecting plants and auditing reactor operator training.

Orders on Babcock & Wilcox Plants

Soon after the TMI-2 accident, the NRC staff began a reevaluation of the design features of Babcock & Wilcox-designed reactors to determine whether additional safety corrections or improvements were necessary. This evaluation involved numerous meetings with Babcock & Wilcox and the affected licensees.

The conclusion of these preliminary staff studies was documented in an April 25, 1979 status report to the Commission. It was found that the Babcock & Wilcox-designed reactors appeared to be unusually sensitive to certain transient conditions originating in the secondary system. The features of the Babcock & Wilcox-designed plants that contributed to this sensitivity were (1) the relatively small liquid volumes in the secondary side of the steam generators, (2) lack of direct initiation of reactor trip upon the occurrence of off-normal conditions in the feedwater system, (3) reliance on an integrated control system (ICS) to automatically regulate feedwater flow, (4) actuation before reactor trip of a power-operated relief valve on the primary system pressurizer (which, if the valve sticks open, can aggravate the event), and (5) a low steam generator elevation (relative to the reactor vessel) which provides a smaller driving head for natural circulation (except for the Davis-Besse plant).

Because of these features, the Babcock & Wilcox-designed plants rely more than other PWR designs on the reliability and performance characteristics of the auxiliary feedwater system, the integrated control system, and the emergency core cooling system (ECCS) performance to recover from certain anticipated transients, such as loss of offsite power and loss of normal feedwater. This, in turn, can require greater operator knowledge and skill to safely manage the plant controls during such anticipated transients. As a result of the work supporting the April 25, 1979 report, the NRC staff concluded that certain other short-term design and procedural changes at operating Babcock & Wilcox-designed facilities were necessary in order to assure adequate protection to public health and safety.

After a series of discussions between the NRC staff and licensees of operating Babcock & Wilcox-designed plants, the licensees agreed to shut down these plants until the actions identified to the Commission in the April 25, 1979 report could be completed. This agreement was confirmed by a Commission Order to each licensee. Authorizations to resume operation were issued in the period late May through early July 1979, as individual licensees satisfactorily completed the short-term actions and the NRC staff completed onsite verifications of the plants' readiness to resume operation. In addition to the modifications to be implemented promptly, each licensee also proposed to carry out certain additional long-term modifications to further enhance the capability and reliability of the plant systems to cope with transient events.

Some of the long-term modifications involve the design, procurement, and qualification of safety-grade hardware. Therefore, all of the actions of the long-term portion of the Orders have not yet been completed. Staff involvement will continue to assure that licensees complete each long-term action of the Order "as promptly as practicable," and that the Orders are closed out by a prompt staff acceptance review.

Generic and Plant-Specific Studies

For Babcock & Wilcox-designed operating reactors, an initial staff study was completed and published in a staff report NUREG-0560, "Staff Report on the Generic Assessment of Feedwater Transients in Pressurized Water Reactors Designed by the Babcock & Wilcox Company." This study considered the particular design features and operational history of Babcock & Wilcox-designed operating plants in light of the TMI-2 accident and related current licensing requirements. As a result of this study, a number of findings and recommendations resulted which are now being pursued.

Generally, the activities involving the Babcock & Wilcox-designed reactors are reflected in the actions specified in the Orders. Consequently, as noted earlier, a number of actions have been specified regarding transient and small-break analyses, upgrading of auxiliary feedwater reliability and performance, procedures for operator action, and operator training. The results of the staff review of the Babcock & Wilcox small break analysis is published in a staff report NUREG-0565, "Generic Evaluation of Small-Break Loss-of-Coolant Accident Behavior in Babcock & Wilcox Designed Operating Plants."

Similar studies have been completed for the Westinghouse- and General Electric-designed operating plants. These studies, which also focus specifically on the predicted plant performance under different accident scenarios involving feedwater transients and small break loss-of-coolant accidents are published in staff reports NUREG-0611, "Generic Evaluation of Feedwater Transients and Small-Break Loss-of-Coolant Accidents in Westinghouse-Designed Operating Pants," and NUREG-0626, "Generic Evaluation of Feedwater Transients and Small-Break Loss-of-Coolant Accidents in GE-Designed Operating Plants and Near-Term Operating License Applications," respectively.

1.3 Conclusions

Based on our generic review of the CE-designed operating plants, we have reached the following conclusions:

(1) The continued operation of the CE-designed operating plants is acceptable provided that those actions related to the plants' designs and operation, and training of operators identified in Section 3 of this report, are implemented consistent with the recommended implementation schedule.

(2) The actions taken by the licensees with CE-designed operating plants in response to IE Bulletins 79-06B and 79-06C (including the actions specified in NUREG-0623, "Generic Assessment of Delayed Reactor Coolant Pump Trip During Small Break Loss-of-Coolant Accidents in Pressurized Water Reactors") provide added assurance for the protection of the health and safety of the public.

In addition, the B&OTF has independently confirmed the safety significance of those related short-term and long-term actions recommended by other NRR task forces identified in this report.

2. INSPECTION AND ENFORCEMENT BULLETINS (TMI-2)

2.1 General

The NRC has a formal program within its Office of Inspection and Enforcement (IE) which informs all licensees of events having safety significance at operating plants. Whenever an operating plant experiences an event of such safety significance that it requires actions by other licensees, an IE Bulletin is issued.

As a result of the Three Mile Island Unit 2 (TMI-2) accident, several IE Bulletins were issued. Table 2-1 lists the TMI-2 related bulletins that have been issued to date.

The actions required by licensees in responding to the bulletins in Table 2-1 have been classified into two categories: (1) those requiring licensees to review the information in the bulletins and to assess whether changes in design or procedures are required in light of such information; and (2) those requiring licensees to implement changes in specific design features or operating procedures. Each such category is discussed in greater detail in the sections that follow. The status of the NRC staff's evaluation to date of the actions taken by licensees in responding to the bulletins is provided in Section 2.3.

2.2 Actions Required by IE Bulletins

2.2.1 Review Actions

IE Bulletin 79-05 was the first of a series of bulletins issued in connection with the TMI-2 accident. This bulletin, which was issued on April 1, 1979, included a description of the initiating events as well as the course of subsequent events. In addition, this bulletin identified certain actions which had to be taken by licensees having Babcock & Wilcox (B&W)-designed reactors.

IE Bulletin 79-05 served three primary purposes: (1) it informed all nuclear power plant licensees of the events that transpired at TMI-2, (2) it initiated a review by licensees with B&W-designed reactors, and (3) it informed licensees with B&W-designed reactors of the need for certain changes at their plants. Subsequent bulletins [i.e., 79-05A, 79-05B, 79-05C, 79-06, 79-06A, 79-06A (Rev. 1), 79-06B, 79-06C, and 79-08] initiated similar reviews and identified more specific corrective measures to be taken in certain cases. The general review actions required by the licensees with CE-designed reactors have been abstracted in the paragraphs that follow from IE Bulletins 79-06B and 79-06C, the bulletins applicable to CE-designed reactors. Actions required by the bulletins that involve specific changes to the plant design or operating procedures are discussed in Section 2.2.2.

TABLE 2-1

TMI-2 RELATED LISTING OF IE BULLETINS

Bulletin	Subject	Issue Date	Issued to Licensees
79-05	Nuclear Accident at Three Mile Island	4/1/79	All B&W-designed power reactors with an operating license for action and all other power reactors for information
79-05A	Nuclear Accident at Three Mile Island - Supplement	4/5/79	All B&W-designed power reactors with an operating license for action and all other power reactors for information
79-06	Review of Operational Errors and System Misalignments Identified during the Three Mile Island Accident	4/11/79	All pressurized water reactors with an operating license (except B&W-designed) for action and all other power reactors for information
79-06A	Review of Operational Errors and System Misalignments Identified During the Three Mile Island Accident (replaced 79-06)	4/14/79	All Westinghouse-designed power reactors with an operating license for action and all other power reactors for information
79-06B	Review of Operational Errors and System Misalignments Identified During the Three Mile Island Accident	4/14/79	All Combustion Engineering-designed (CE) power reactors with an operating license for action and all other power reactors for information
79-08	Events Relevant to Boiling Water Power Reactors Identified During the Three Mile Island Accident	4/14/79	All boiling water reactors with an operating license for action and all other power reactors for information
79-06A (Rev. 1)	Review of Operational Error and System Misalignment Identified During the Three Mile Accident. (Revised Items 3 and 13 of Bulletin 79-06A)	4/18/79	All Westinghouse-designed power reactors with an operating license for action and all other power reactors for information
79-05B	Nuclear Accident at Three Mile Island	4/21/79	All B&W-designed power reactors with an operating license for action and all other power reactors for information
79-05C & 79-06C	Nuclear Accident at Three Mile Island - Supplement	7/26/79	All B&W, W, and CE-designed power reactors with an operating license for action and all other power reactors for information

The following items were incorporated in IE Bulletin 79-06B by reference to IE Bulletins 79-05 and 79-05A:

(1) Review the description of circumstances surrounding the TMI-2 accident. This review should be directed toward understanding (a) the seriousness and consequences of simultaneously blocking both auxiliary feedwater trains, (b) the apparent operational errors which led to the eventual core damage, (c) the potential which exists for having a water level in the pressurizer simultaneously with the reactor not being full of water, and (d) the necessity to systematically analyze plant conditions and parameters in order to take appropriate corrective action.

(2) Review operating procedures for coping with transients and accidents to assure that they acknowledge the possibility of forming voids in the primary coolant system large enough to compromise core cooling capability, especially natural circulation capability, and that they identify (a) operator actions required to prevent formation of such voids, and (b) operator actions required to enhance core cooling in the event such voids are formed.

(3) Review operating procedures and training instructions to assure that operators do not override automatic actions of engineered safety features unless continued operation of engineered safety features will result in unsafe plant conditions.

(4) Review all safety-related valve positions and procedures for positioning valves, including those for use following maintenance, testing, plant and system startup, and supervisory periodic surveillance to assure that they will be in the correct position during all operational modes.

(5) Review the operating modes and procedures for all systems designed to transfer potentially radioactive gases and liquids out of the containment to assure that the transfer will not occur inadvertently.

(6) Review operating modes and procedures to deal with significant amounts of hydrogen gas generated during a transient or other accident and that would either remain inside the primary system or be released to the containment.

2.2.2 Changes to Plant Design Features and Operating Procedures

In the days immediately following the issuance of IE Bulletin 79-05, the NRC received additional preliminary information related to the TMI-2 incident. Based on this information, the NRC identified six deficiencies consisting of human errors, design inadequacies, and mechanical failures as the likely candidates that led to the core damage and radiation releases at Three Mile Island. To assure that all the licensees were fully informed of these factors, followup bulletins were issued, beginning with IE Bulletin 79-05A on April 5, 1979 for licensees with B&W-designed reactors and

terminating with IE Bulletins 79-05C and 79-06C for licensees with B&W, W- and CE-designed reactors, respectively, as indicated in Table 2-1.

In contrast to IE Bulletin 79-05, these later bulletins not only provided information for licensees to review, but also identified specific actions to be taken to reduce the likelihood of the type of event which occurred at TMI-2. The following is a listing of the types of actions to be taken by licensees with CE-designed plants:

(1) The licensees were required to revise existing operating procedures to specify that, if the high pressure injection (HPI) system has been automatically actuated because of a low reactor coolant system pressure condition, it must remain in operation until either:

   (a) Both low pressure injection system pumps are operating and flow has been observed for 20 minutes or longer at a rate which would assure stable plant behavior, or

   (b) The high-pressure injection (HPI) system has been operating for 20 minutes and all hot and cold leg temperatures are at least 50°F below the saturation temperature for the existing reactor coolant system pressure. If 50°F subcooling cannot be maintained after HPI cutoff, the HPI shall be reactivated. The degree of subcooling beyond 50°F and the length of time HPI is in operation shall be limited by the pressure/temperature considerations for the vessel integrity.

(2) The licensees were required to modify existing operating procedures to assure that the operators would not rely solely upon pressurizer level indication, but that they should consider other plant parameters in evaluating plant conditions, such as water inventory, in the reactor primary system.

(3) The licensees were required to modify the existing containment isolation system design and operating procedures, as necessary, to permit the isolation of those lines whose isolation would not degrade safety features or cooling capability, upon automatic initiation of safety injection.

(4) The licensees were required to modify maintenance and test procedures, as necessary, to assure the operability of redundant safety-related systems prior to their removal from service and following maintenance or testing. Explicit notification is to be given to all reactor operational personnel whenever a safety-related system is removed from and returned to service.

(5) The licensees were required to modify reporting procedures for prompt NRC notification to assure that the NRC is notified within one hour of the time that a reactor is not in a controlled or expected condition of operation. Further, at that time, an open continuous communication channel with the NRC was required to be established and maintained.

(6) Licensees with plants with pressurizer power-operated relief valves (PORVs) were required to prepare, and implement immediately, specific procedures which identify those plant indications that the operators may utilize to determine that the PORVs are open and direct the operators to take action to secure the PORV by closing the PORV block valve when the reactor coolant system pressure is reduced below the setpoint for normal automatic closure of the PORV and the PORV remains stuck in the open position.

(7) Licensees with plants where the auxiliary feedwater system is not automatically initiated were instructed to prepare, and implement immediately, procedures requiring the stationing of an individual whose function would be to promptly initiate adequate auxiliary feedwater flow to the steam generator(s) for those transients or accidents whose consequences can be limited by such action. This individual should have no other assigned concurrent duties and should be in direct and continuous communication with the control room.

(8) The licensees were required to propose changes to those technical specifications which must be modified as a result of implementing the above items and to identify design changes necessary to effect long-term resolution of these items.

(9) Licensees with CE-designed reactors were required to take the following actions by virtue of IE Bulletin 79-06C which, among other actions, superseded item 6(c) of Bulletin 79-06B.

(a) Upon reactor trip and initiation of HPI caused by low reactor coolant system pressure, all operating reactor coolant pumps shall be tripped immediately;

(b) Two licensed operators shall be provided in the control room at all times during operation to accomplish action (a) above as well as other immediate and necessary followup actions;

(c) Perform and submit a report of LOCA analyses for their plants covering a range of small break sizes and a range of time lapses between reactor trip and pump trip. The resulting peak cladding temperature was to be determined for each pair of values of the parameters. The range of values for each parameter must be wide enough to assure that the maximum peak cladding temperature or, if appropriate, the region containing peak cladding temperatures greater than 2200°F is identified;

(d) Develop new guidelines, based on the analyses done under item (c) above, for both LOCA and non-LOCA transients that take into account the impact of reactor coolant pump trip requirements;

(e) Revise emergency procedures and train all licensed reactor operators and senior reactor operators based on the guidelines developed under item (d) above;

(f) Provide analyses and develop guidelines and procedures related to inadequate core cooling (as discussed in Section 2.1.9 of NUREG-0578, "TMI-2 Lessons Learned Task Force Status Report and Short-Term Recommendations") and define the conditions under which a restart of the reactor coolant pumps should be attempted; and

(g) As a long-term action, propose and submit a design that will assure automatic tripping of the operating reactor coolant pumps under all circumstances in which this action may be needed.

2.2.3 Evaluation of Licensee Responses to IE Bulletins

The staff evaluation of each licensee's response to the TMI-2 IE Bulletins has been completed. Requests for additional information and clarification of individual licensee's responses were made to facilitate the review of these responses. In addition, meetings were held with the individual licensees and their representatives, as necessary, to expedite the review effort. Towards this end, licensees with CE-designed reactors formed an owners group to interact with the Bulletins and Orders Task Force to resolve several issues raised by the IE Bulletins.

Bulletin evaluation reports are being prepared regarding each licensee's response to the IE Bulletins and sent to each licensee reporting the results of the staff's review. The report states the staff's conclusions regarding the licensees responsiveness to NRC's concerns. It also indicates whether the licensee has (1) correctly interpreted the intent of the bulletin; (2) demonstrated his understanding of the salient issues arising from the TMI-2 incident and their implications on his own operations; and (3) provided added assurance for the protection of the public health and safety during continued plant operation.

3. GENERAL FINDINGS AND RECOMMENDATIONS

This section contains statements of concern (or findings) and recommendations. The purpose of this section is to identify our recommendations and the specific appendices where further detail is included. A schedule for implementation of the recommendations may be found in Table 3-1.

Based on the results of our review of feedwater transients and other related events, we have concluded that the Combustion Engineering-designed operating plants can continue to operate pending incorporation of the recommended changes identified in this report. The bases for this conclusion are as follows:

(1) Combustion Engineering-designed plants are much less sensitive to feedwater transients than Babcock & Wilcox-designed plants were in their pre-TMI-2 configuration.

(2) The NRC's Lessons Learned Task Force has developed a more comprehensive set of short-term actions (specified in NUREG-0578) which the NRC staff has implemented as requirements for operating plants.

(3) The Lessons Learned Task Force has also developed a number of long-term recommendations which have been published in NUREG-0585 regarding changes in nuclear plant and operation and the regulatory process.

(4) Changes in plant procedures and operator training and design modifications have been required for operating plants with CE-designed reactors by IE Bulletins 79-06B and 79-06C* based on the experience at TMI-2 which:

   (a) Provide added assurance that engineered safety features operation will not be terminated prematurely.

   (b) Reduce the susceptibility of manually actuated auxiliary feedwater systems to operator error or inaction by requiring a dedicated operator to activate the auxiliary feedwater system.

   (c) Increase operator awareness and understanding of the events that occurred at TMI-2 through retraining programs.

   (d) Assure that more frequent checks are made to verify that valves and safety-related systems are maintained in correct position and also that they are returned to their correct positions following test and/or maintenance.

   (e) Provide additional assurance that the occurrence of a stuck-open power-operated relief valve will be detected and isolated in a timely manner.

*As amended by the actions specified in NUREG-0623.

TABLE 3-1

SCHEDULE FOR IMPLEMENTING THE BULLETINS & ORDERS
TASK FORCE RECOMMENDATIONS FOR CE-DESIGNED PLANTS

SECTION OF RECOMMENDATION	TITLE OF RECOMMENDATION	SCHEDULE DATE
3.1.3.1	Technical Specification (TS) Time Limit on AFW System Train Outage (GS-1)	01/01/80
3.1.3.2	TS Administrative Control on Manual Valves - Lock and Verify Position (GS-2)	01/01/80
3.1.3.3	AFW System Flow Throttling - Water Hammer (GS-3)	01/01/80
3.1.3.4	Emergency Procedures for Initiating Backup Water Supplies (GS-4)	01/01/80
3.1.3.5	Emergency Procedures for Initiating AFW Flow Following Loss of All AC Power (GS-5)	01/01/80
3.1.3.6	AFW System Flow Path Verification (GS-6)	01/01/80
3.1.3.7	Automatic Initiation of AFW System (GS-8)	01/01/80
3.1.4.1	Primary AFW Source Low Level Alarm	01/01/80
3.1.4.2	AFW Pump Endurance Test	01/01/80
3.1.4.3	Indication of AFW Flow to the Steam Generators	01/01/80
3.1.4.4	AFW System Availability During Periodic Surveillance Testing	01/01/80
3.1.5.1	Automatic Initiation of AFW System (GL-1)	01/01/81
3.1.5.2	Single Valves in AFW System Flow Path (GL-2)	01/01/81
3.1.5.3	Elimination of AC Power Dependency (GL-3)	01/01/81
3.1.5.4	Prevention of Multiple Pump Damage Due to Loss of Suction Resulting from Natural Phenomena (GL-4)	01/01/81
3.2.1	Confirmation of Small-Break LOCA Analysis Methods:	
(a)	Analysis Methods Appendix K	07/01/80
(b)	Plant-Specific Appendix K Calculations	01/01/81
3.2.2	Role of Non-Safety Equipment in Mitigating S-B LOCAs:	
(a)	Automatic Trip of RCPs	01/01/81
(b)	Review of Reliability and Redundancy of Equipment	TMI-2 Action Plan
3.2.3	Michelson Concerns:	
(a)	Two-Phase Natural Circulation Experiments	01/01/81
(b)	Instrumentation to Verify Natural Circulation	04/01/81
3.2.4	PORV Failures in CE Plants:	
(a)	Installation of Automatic Isolation of PORVs	07/01/80
(b)	Testing Automatic Isolation of PORVs	First Refueling Outage Afer Installation
(c)	CE Report on PORV Failure Reductions	10/01/80
(d)	Reporting Future Failures and Challenges of PORVs and SVs	Failures: Promptly; Challenges: In Annual Report
(e)	Evaluate the Elimination of PORV Function	TMI-2 Action Plan

TABLE 3-1 (Continued)

SECTION OF RECOMMENDATION	TITLE OF RECOMMENDATION	SCHEDULE DATE
3.2.5	Audit Calculations:	
(a)	Modification to RELAP and CEFLASH-4AS Due to Uncertainties in Heatup Calculations	RELAP: TMI-2 Action Plan CEFLASH: 07/01/80
(b)	Effects of Accumulator Injection on RELAP-4 Calc.	NRC Action
(c)	Modification of RELAP4 to Represent SG Behavior Realistically	NRC Action
3.3.1	Expanded Use of Simulators in Operator Training:	
(a)	Simulator Training Program	07/01/80
(b)	Simulation of Small-Break LOCAs	01/01/81
3.4.1	Review of Procedures (NRC)	TMI-2 Action Plan
3.4.2	Review of Procedures (NSSS Vendors)	TMI-2 Action Plan
3.4.3	Symptom-Based Emergency Procedures	TMI-2 Action Plan
3.5.1	Monitoring Control Board	04/01/80

(f) Require a dedicated operator to trip the reactor coolant pumps subsequent to a reactor trip and initiation of high pressure injection caused by low reactor coolant system pressure. (Note: When the automatic pump trip feature required by NUREG-0623 has been installed, the need for a dedicated operator to trip the pumps will cease.)

3.1 Auxiliary Feedwater Systems

3.1.1 Summary

The Three Mile Island Unit 2 (TMI-2) accident and subsequent investigations and studies highlighted the importance of the auxiliary feedwater (AFW) system in the mitigation of transients and accidents. As part of our assessment of the TMI-2 accident and related implications for operating plants, we evaluated the AFW systems for all operating plants having nuclear steam supply systems (NSSS) designed by Westinghouse (W) (25 units) and Combustion Engineering (CE) (8 units).*

The objectives of this study were to (1) identify necessary changes in AFW system design or related procedures at these plants, in order to assure their continued safe operation, and (2) to identify other system characteristics in the AFW system design of these plants which, on a long-term basis, may require system modifications. To accomplish these objectives, we:

(1) Reviewed plant-specific AFW system designs in light of current regulatory requirements; and

(2) Assessed the relative reliability of the various AFW systems under various loss of feedwater transients, one of which was the initiating event at TMI-2, and other postulated potential failure conditions by determining the potential for AFW syste failure due to common causes, single point vulnerabilities and human error.

As part of our evaluation, we performed a deterministic type of safety review, using as principal guidance the acceptance criteria specified in Section 10.4.9 of the Standard Review Plan (SRP). In conjunction with this deterministic review, we used event tree and fault tree logic techniques, as part of a reliability analysis to determine dominant failure modes and assess AFW system comparative reliability levels under specified types of transients. When the recommendations identified in this review are implemented, the reliability of the AFW systems for each operating plant should be improved to a degree dependent on whether the comparative reliability was characterized as relatively high or relatively low.

The subsections that follow summarize the results of the generic AFW system review, and delineate recommendations that should be implemented to improve the performance and reliability of the AFW systems of the various CE-designed operating plants.

*Studies of the AFW systems at Babcock & Wilcox (B&W)-designed operating plants were the subjects of separate Commission Orders and other work performed by the staff.

Details of our generic review are contained in Appendix III and those for each individual plant are contained in Appendix X.

3.1.2 Recommendation Categories

The recommendations resulting from this review are categorized as generic and plant-specific, as well as short-term and long-term. The generic recommendations (designations GS and GL refer to generic short- and long-term, respectively) are a result of similarities in AFW system potential problems between plants and are applicable to more than one plant. The generic recommendations and the concerns which led to these recommendations are described in this section. There are also plant-specific recommendations that are unique to a given plant's AFW system. The plant-specific recommendations are addressed more fully in the individual plant evaluations in Appendix X. The individual plant evaluations have already been transmitted to each licensee as required modifications to the AFW system design or associated procedures. This was done so that implementation of the required actions could proceed in a timely manner.

The short-term recommendations represent actions to improve AFW system reliability that were to be implemented by January 1, 1980, or as soon thereafter as practicable. In general, they involve upgrading of Technical Specifications or establishing procedures to avoid or mitigate potential system or operator failures. The long-term recommendations involve system design evaluations and/or modifications to improve AFW system reliability and represent actions that were to be implemented by January 1, 1981, or as soon thereafter as is practicable. This implementation schedule is intended to be consistent with the schedule for implementation of the requirements specified in NUREG-0578.

There are two significant limitations of the AFW system review and evaluation which should be noted, as well as their effect on the recommendations.

(1) The review covered the classification and divisional redundancy of power sources for AFW system equipment and instrumentation and controls, and the type of instrumentation and controls provided for the overall AFW system; however, it did not include a review of the detailed logic and control diagrams. This explains, in part, the conservative approach used in improving certain short- and long-term generic recommendations whether they are applicable or not.

(2) Piping isometric and plant arrangement drawings were not reviewed; therefore, the review is not a complete evaluation of postulated high energy pipe breaks that could affect the AFW system. However, where system flow sheets revealed potential pipe breaks that could cause total loss of AFW system capability, these problem areas have been identified and included in the long-term recommendations for further evaluation.

3.1.3 Short-Term Generic Recommendations

3.1.3.1 Technical Specification Time Limit on AFW System Train Outage

Concern - Several of the plants reviewed have plant Technical Specifications that permit one of the AFW system trains to be out of service for an indefinite time period. Indefinite outage of one train reduces the defense-in-depth provided by multiple AFW system trains.

Recommendation GS-1 - The licensee should propose modifications to the Technical Specifications to limit the time that one AFW system pump and its associated flow train and essential instrumentation can be inoperable. The outage time limit and subsequent action time should be as required in current Standard Technical Specifications; i.e., 72 hours and 12 hours, respectively.

3.1.3.2 Technical Specification Administrative Controls on Manual Valves - Lock and Verify Position

Concern - Several of the plants reviewed use a single manual valve or multiple valves in series in the common suction piping between the primary water source and the AFW system pump suction. At some plants the valves are locked open, while at others, they are not locked in position. If the valves are inadvertently left closed, the AFW system would be inoperable because the water supply to the pumps would be isolated. Since there is no remote valve position indication for these valves, the operator has no immediate means of determining valve position.

Further, the Technical Specifications for plants with locked-open manual valves do not require periodic inspection to verify that the valves are locked and in the correct position. For most plants where the valves are not locked open, valve position is verified on some periodic basis.

Recommendation GS-2 - The licensee should lock open single valves or multiple valves in series in the AFW system pump suction piping and lock open other single valves or multiple valves in series that could interrupt all AFW flow. Monthly inspections should be performed to verify that these valves are locked and in the open position. These inspections should be proposed for incorporation into the surveillance requirements of the plant Technical Specifications. See Recommendation GL-2 for the longer-term resolution of this concern.

3.1.3.3 AFW System Flow Throttling-Water Hammer

Concern - Several of the plants reviewed apparently throttle down the AFW system initial flow to eliminate or reduce the potential for water hammer. In such cases, the overall reliability of the AFW system can be adversely affected.

Recommendation GS-3 - Licensees have stated that the AFW system flow is throttled per license requirements to avoid water hammer. Licensees should reexamine the practice of throttling AFW system flow to avoid water hammer.

Licensees should verify that the AFW system will supply on demand sufficient initial flow to the necessary steam generators to assure adequate decay heat removal following loss of main feedwater flow and a reactor trip from 100% power. In cases where this reevaluation results in an increase in initial AFW system flow, the licensee should provide sufficient information to demonstrate that the required initial AFW system flow will not result in plant damage due to water hammer.

3.1.3.4 Emergency Procedures for Initiating Backup Water Supplies

Concern - Most plants do not have written procedures for transferring to alternate sources of AFW supply if the primary supply is unavailable or exhausted. Without specific criteria and procedures for an operator to follow to transfer to alternate water sources, the primary supply could be exhausted and result in pump damage or a long interruption of AFW flow.

Recommendation GS-4 - Emergency procedures for transferring to alternate sources of AFW supply should be available to the plant operators. These procedures should include criteria to inform the operators when, and in what order, the transfer to alternate water sources should take place. The following cases should be covered by the procedures:

(1) The case in which the primary water supply is not initially available. The procedures for this case should include any operator actions required to protect the AFW system pumps against self-damage before water flow is initiated, and

(2) The case in which the primary water supply is being depleted. The procedure for this case should provide for transfer to the alternate water sources prior to draining of the primary water supply.

3.1.3.5 Emergency Procedures for Initiating AFW Flow Following a Complete Loss of Alternating Current Power

Concern - Some operating plants depend on ac power for all sources of AFW system supply, including the turbine-driven pump train. In the event of loss of offsite and onsite ac power, ac power dependent lube oil supply or lube oil cooling for the pump will stop, and/or manual actions are required to initiate AFW flow from the turbine-driven pump by manually opening the turbine steam admission valve and/or AFW system flow control valves. There are no procedures available to the plant operators for AFW system initiation and control under these conditions. This could result in a considerable time delay for AFW system initiation, since the operators would not be guided by procedures dealing with this event.

Recommendation GS-5 - The as-built plant should be capable of providing the required AFW flow for at least 2 hours from one AFW pump train independent of any ac power source. If manual AFW system initiation or flow control is required following a complete loss of ac power, emergency procedures should be established for manually initiating and controlling the system under these conditions. Since the water for cooling of the lube oil for the turbine-driven pump bearings may be dependent on ac power, design or procedural changes shall be made to eliminate this dependency as soon as practicable. Until this is done, the emergency procedures should provide for an individual to be stationed at the turbine-driven pump in the event of the loss of all ac power to monitor pump bearing and/or lube oil temperatures. If necessary, this operator would operate the turbine-driven pump in an on-off mode until ac power is restored. Adequate lighting powered by direct current (dc) power sources and communications at local stations should also be provided if manual initiation and control of the AFW system is needed. (See Recommendation GL-3 for the longer-term resolution of this concern.)

3.1.3.6 AFW System Flow Path Verification

Concern - Periodic testing of the AFW system is accomplished by testing of individual components of one flow train (periodic pump recirculation flow test or automatic valve actuation), thus altering the normal AFW system flow path(s). The flow capability of the entire AFW system, or at least one integral AFW system train, is only demonstrated on system demand following a transient, or if the AFW system is used for normal plant startup or shutdown.

Recent Licensee Event Reports indicate a need to improve the quality of system testing and maintenance. Specifically, periodic testing and maintenance procedures inadvertently result in (1) more than one AFW system flow train being unavailable during the test, or (2) the AFW system flow train under test not being properly restored to its operable condition following the test or maintenance work. The Office of Inspection and Enforcement has taken action to correct Item (1); the recommendation below is made to correct Item (2).

Recommendation GS-6 - The licensee should confirm flow path availability of an AFW system flow train that has been out of service to perform periodic testing or maintenance as follows:

(1) Procedures should be implemented to require an operator to determine that the AFW system valves are properly aligned and a second operator to independently verify that the valves are properly aligned.

(2) The licensee should propose Technical Specifications to assure that, prior to plant startup following an extended cold shutdown, a flow test would be performed to verify the normal flow path from the primary AFW system water source to the steam generators. The flow test should be conducted with AFW system valves in their normal alignment.

3.1.3.7 Automatic Initiation of AFW Systems

Concern - For plants with a manually initiated AFW system, there is the potential for failure of the operator to manually actuate the system following a transient in time to maintain the steam generator water level high enough to assure reactor decay heat removal via the steam generator(s). While IE Bulletin 79-06B requires a dedicated individual to initiate and control AFW flow upon the loss of main feedwater for CE-designed operating plants with a manually initiated AFW system, further action should be taken in the short-term. This concern is identical to Item 2.1.7.a of NUREG-0578.

Recommendation GS-8 - The licensee should install a system to automatically initiate AFW system flow. This system need not be safety-grade; however, in the short-term, it should meet the criteria listed below, which are similar to Item 2.1.7.a of NUREG-0578. For the longer term, the automatic initiation signals and circuits should be upgraded to meet safety-grade requirements, as indicated in Recommendation GL-2.

(1) The design should provide for the automatic initiation of the auxiliary feedwater system flow.

(2) The automatic initiation signals and circuits should be designed so that a single failure will not result in the loss of auxiliary feedwater system function.

(3) Testability of the initiating signals and circuits should be a feature of the design.

(4) The initiating signals and circuits should be powered from the emergency buses.

(5) Manual capability to initiate the auxiliary feedwater system from the control room should be retained and should be implemented so that a single failure in the manual circuits will not result in the loss of system function.

(6) The ac motor-driven pumps and valves in the auxiliary feedwater system should be included in the automatic actuation (simultaneous and/or sequential) of the loads to the emergency buses.

(7) The automatic initiation signals and circuits should be designed so that their failure will not result in the loss of manual capability to initiate the AFW system from the control room.

3.1.4 Additional Short-Term Recommendations

The following additional short-term recommendations resulted from the staff's Lessons Learned Task Force review and the Bulletins & Orders Task Force review of AFW systems at Babcock & Wilcox-designed operating plants subsequent to our review of the AFW system design in W- and CE-designed operating plants. They have not been examined for specific applicability to individual W- and CE-designed operating plants.

3.1.4.1 Primary AFW Water Source Low Level Alarm

Concern - Plants which do not have level indication and alarm for the primary water source may not provide the operator with sufficient information to properly operate the AFW system.

Recommendation - The licensee should provide redundant level indication and low level alarms in the control room for the AFW system primary water supply to allow the operator to anticipate the need to make up water or transfer to an alternate water supply and prevent a low pump suction pressure condition from occurring. The low level alarm setpoint should allow at least 20 minutes for operator action, assuming that the largest capacity AFW pump is operating.

3.1.4.2 AFW Pump Endurance Test

Concern - Since it may be necessary to rely on the AFW system to remove decay heat for extended periods of time, it should be demonstrated that the AFW pumps have the capability for continuous operation over an extended time period without failure.

Recommendation - The licensee should perform a 72-hour endurance test on all AFW system pumps, if such a test or continuous period of operation has not been accomplished to date. Following the 72-hour pump run, the pumps should be shut down and cooled down and then restarted and run for 1 hour. Test acceptance criteria should include demonstrating that the pumps remain within design limits with respect to bearing/bearing oil temperatures and vibration and that pump room ambient conditions (temperature, humidity) do not exceed environmental qualification limits for safety-related equipment in the room.

3.1.4.3 Indication of AFW Flow to the Steam Generators

Concern - Indication of AFW flow to the steam generators is considered important to the manual regulation of AFW flow to maintain the required steam generator water level. This concern is identical to Item 2.1.7.b of NUREG-0578.

**Recommendation - The licensee should implement the following requirements as specified by Item 2.1.7.b of NUREG-0578:

- Safety-grade indication of AFW flow to each steam generator should be provided in the control room.

- The AFW flow instrument channels should be powered from the emergency buses consistent with satisfying the emergency power diversity requirements for

*Based on recent test results, this requirement has been reduced to 48 hours.

**The implementation of this recommendation was modified by Denton's letter to all operating reactors dated October 30, 1979.

the AFW system set forth in Auxiliary Systems Branch Technical Position 10-1 of the Standard Review Plan, Section 10.4.9.

3.1.4.4 AFW System Availability During Periodic Surveillance Testing

Concern - Some plants require local manual realignment of valves to conduct periodic pump surveillance tests on one AFW system train. When such plants are in this test mode and there is only one remaining AFW system train available to respond to a demand for initiation of AFW system operation, the AFW system redundancy and ability to withstand a single failure are lost.

Recommmendation - Licensees with plants which require local manual realignment of valves to conduct periodic tests on one AFW system train, and which have only one remaining AFW train available for operation should propose Technical Specifications to provide that a dedicated individual who is in communication with the control room be stationed at the manual valves. Upon instruction from the control room, this operator would realign the valves in the AFW system from the test mode to the operational alignment.

3.1.5 Long-Term Generic Recommendations

3.1.5.1 Automatic Initiation of AFW Systems

Concern - This concern is the same as short-term generic recommendation GS-8; namely, failure of an operator to actuate a manual start AFW system in time to maintain steam generator water level high enough to assure reactor decay heat removal via the steam generator(s).

Recommendation GL-1 - For plants with a manual starting AFW system, the licensee should install a system to automatically initiate the AFW system flow. This system and associated automatic initiation signals should be designed and installed to meet safety-grade requirements. Manual AFW system start and control capability should be retained with manual start serving as backup to automatic AFW system initiation.

3.1.5.2 Single Valves in the AFW System Flow Path

Concern - This concern is the same as short-term generic recommendation GS-2; namely, AFW system inoperability due to an inadvertently closed manual valve that could interrupt all AFW system flow.

Recommendation GL-2 - Licensees with plant designs in which all (primary and alternate) water supplies to the AFW systems pass through valves in a single flow path, should install redundant parallel flow paths (piping and valves).

Licensees with plant designs in which the primary AFW system water supply passes through valves in a single flow path, but the alternate AFW system water supplies connect to the AFW system pump suction piping downstream of the above valve(s), should install redundant valves parallel to the above valve(s) or provide automatic opening of the valve(s) from the alternate water supply upon low pump suction pressure.

The licensee should propose Technical Specifications to incorporate appropriate periodic inspections to verify the valve positions into the surveillance requirements.

3.1.5.3 Elimination of AFW System Dependency on Alternating Current Power Following a Complete Loss of Alternating Current Power

Concern - This concern is the same as short-term generic recommendation GS-5; namely, delay in initiation of AFW system operation or maintaining AFW system operation following a postulated loss of onsite and offsite ac power, i.e., ac power blackout.

Recommendation GL-3 - At least one AFW system pump and its associated flow path and essential instrumentation should atuomatically initiate AFW system flow and be capable of being operated independently of any ac power source for at least 2 hours. Conversion of dc power to ac power is acceptable.

3.1.5.4 Prevention of Multiple Pump Damage Due to Loss of Suction Resulting from Natural Phenomena

Concern - In many of the operating plants, the normal water supply to the AFW system pumps (including the interconnected piping) is not protected from earthquakes or tornadoes. Any natural phenomenon severe enough to result in a loss of the water supply could also be severe enough to cause a loss of offsite power with loss of main feedwater, resulting in an automatic initiation signal to start the AFW system pumps. The pumps would start without any suction head, leading to cavitation and multiple pump damage in a short period of time, possibly too short for the operators to take action that would protect the pumps. This may lead to unacceptable consequences for some plants, due to a complete loss of feedwater (main and auxiliary).

Recommendation GL-4 - Licensees having plants with unprotected normal AFW system water supplies should evaluate the design of their AFW systems to determine if automatic protection of the pumps is necessary following a seismic event or a tornado. The time available before pump damage, the alarms and indications available to the control room operator, and the time necessary for assessing the problem and taking action should be considered in determining whether operator action can be relied on to prevent pump damage. Consideration should be given to providing pump protection by means such as automatic switchover of the pump suctions to the alternate safety-grade source of water, automatic pump trips on low suction pressure, or upgrading the normal source of water to meet seismic Category I and tornado protection requirements.

3.1.6 Plant Specific AFW System Recommendations

The short-term and long-term plant specific recommendations applicable to the AFW systems for each plant are identified and discussed in Appendix X.

3.2 Analysis

Slow system depressurization accidents resulting from small breaks in the primary system have not, until recently, been subjected to detailed analytical study comparable to that devoted to large breaks. Typically, small breaks have been analyzed down to the smallest break size that would produce system depressurization without uncovering the core in accordance with the single failure criterion and other requirements imposed by Appendix K to 10 CFR Part 50. These analyses assumed the availability of heat removal through the steam generators following reactor scram, power loss to the reactor coolant pumps upon scram, and normal plant protective and emergency core cooling systems activation initiated by the system depressurization. While the analyses, in general, were sufficient to show compliance with the requirements of Section 50.46 of 10 CFR Part 50 (10 CFR § 50.46), they failed to provide the necessary information needed for operator action following a small break as was pointed out by the NRC's Lessons Learned Task Force in NUREG-0578, "TMI-2 Lessons Learned Task Force Status Report and Short-Term Recommendations."

Reassessment of the failure modes assumed in small break accidents as a result of recent events, particularly in light of the TMI-2 accident, have led the staff and industry to a considerably broader interpretation of potential accident scenarios than held previously.

Basically, our review focused on the information presented in the Combustion Engineering report, CEN-114-P (Amendment 1P), "Review of Small Break Transients in Combustion Engineering Nuclear Steam Supply Systems." This report was submitted for our review by the Combustion Engineering Owners Group. Our review included the following considerations: analytical methods, pressurizer model, steam generator model, noncondensible gases, experimental verification, break discharge model, vessel mixture level, system nodal detail, and equilibrium assumption in system representation. The results of our review of this report are summarized below. Further discussion of the findings on each of the principal areas of concern and recommendations for further improvements (other than those identified in this section) may be found in Appendix VIII.

3.2.1 Confirmation of Small-Break LOCA Analysis Methods (Appendix K and 50.46 Requirements)

Finding

The small break LOCA analysis methods used by Combustion Engineering are satisfactory for predicting trends in plant behavior following a small break LOCA.

The results of the analyses can be used to develop improved emergency procedures and to train reactor operators. However, several individual analytical models identified in Section 4.2.1 of Appendix VIII require improvement or further confirmation. [In addition, comparison of the total analysis method of vendors other than CE with available small break integral test data (Semiscale Test S-02-6) has indicated large uncertainties in the calculations (CE elected not to compare their small break analysis model to the S-02-6 test data). The analysis methods should be revised and verified before they can be considered for NRC approval under the requirements of 10 CFR § 50.46.]

Recommendations

(a) The analysis methods used by CE for small break LOCA analysis for compliance with Appendix K to 10 CFR Part 50 should be revised, documented, and submitted for NRC approval. The revisions should account for comparisons with experimental data, including LOFT and Semiscale.

(b) Plant-specific calculations using the NRC-approved model for small break LOCAs as described in (a) above, to show compliance with 10 CFR § 50.46, should be submitted for all CE-designed operating plants for NRC approval.

3.2.2 Role of Non-Safety Equipment in Mitigating Small-Break LOCAs

Finding

Combustion Engineering has performed a sufficient spectrum of small break LOCA analyses to identify the anticipated system performance for breaks in this range. These analyses provide an adequate basis for developing improved operator guidelines, and demonstrate that proper operator action coupled with heat removal by the steam generators, high pressure injection system, and/or the break, assure adequate core cooling. The required operator action is to trip all of the reactor coolant pumps upon HPI system actuation on low pressure. This action is required because the CE calculations show that for a narrow range of small break sizes, the 10 CFR § 50.46 limits on peak cladding temperature could be exceeded if the pumps are not tripped or the trip is delayed. According to estimates by CE, at least 10 minutes are available for the operator to perform this action on best estimate basis and six minutes on a conservative basis.

If, in addition to the small break LOCA, feedwater flow (both main feedwater and auxiliary feedwater) is lost, or, if for any reason natural circulation is not established, there will eventually (within 15 to 45 minutes, as discussed in Appendix VII) be no heat removal through the steam generators. In this case, operator action is required to restore feedwater flow, or to open the PORVs (if closed). According to CE, in the case of a complete loss of feedwater flow, either action will serve to depressurize the primary system so that sufficient safety injection flow can be established. If natural circulation fails, the operator must also open the PORVs. CE indicated that approximately one-half hour is available for the operators to

re-initiate feedwater flow in order to prevent core uncovery. However, the PORVs must be opened within 10 minutes, in the event feedwater is not restored, in order to maintain the calculated consequences of the event within acceptable limits.

The staff recognizes that the time available for the operator to open the PORVs (10 minutes) in order to attempt to depressurize the reactor coolant system in the event of loss of all feedwater is highly uncertain. This is due to the large uncertainty associated with two-phase flow through relief and safety valves. The importance of the flow rate through PORVs and safety valves is acknowledged in Section 2.1.2 of NUREG-0578 by requiring that full-scale prototype tests be performed by July 1981. Based on the previous discussion, the staff has concluded that a diverse decay heat removal path independent of the steam generators is desirable.

Recommendations

(a) Tripping of the reactor coolant pumps in the case of a LOCA is not an ideal solution. The licensees should consider other solutions to the small-break LOCA problem, e.g., an increase in the safety injection flow rate or partial pump operation. Until a better solution is found, the reactor coolant pumps should be tripped automatically in case of a small break LOCA. The signals designated to initiate the reactor coolant pump trip should be carefully selected in order to differentiate between a small break LOCA and other events which do not require reactor coolant pump trip. Acceptable criteria for manual tripping of the reactor coolant pumps in the interim until automatic trips are installed is documented in Paragraph 7.2.3 of NUREG-0623.

(b) The CE small-break LOCA analyses relied on equipment which has not previously been considered part of the reactor protection system or of the engineered safety features system. Equipment in this category includes that used to provide reactor coolant pump trip, the PORVs, pressurizer spray valves, pressurizer relief block valves, equipment used to activate the PORVs and the equipment used to remotely control the pressurizer relief and block valves. The redundancy and reliability of these systems should be reviewed and upgraded, if needed, to comply with the requirements of NUREG-0585, Section 9, regarding the interaction of nonsafety and safety-grade systems. These systems should also be qualified for the post-LOCA environment.

3.2.3 Michelson Concerns

Findings

A number of concerns related to decay heat removal following a very small-break LOCA and other related events were identified by Mr. C. Michelson of TVA (see Section 4.1 of Appendix VIII). These concerns were identified for PWRs designed by Babcock & Wilcox and Combustion Engineering. CE has reviewed these concerns and provided an analysis of those concerns that relate to plants of their design. Postulated modes of two-phase flow natural circulation play an important role in the CE analysis. The CE

analyses provide an adequate assessment of these concerns; however, sufficient experimental results, in particular integral system small-break behavior and two-phase natural circulation, are not available to completely support the analytical predictions. To this end, we have required CE to provide pretest predictions of small-break tests (S-07-10B and L3-1) conducted in the Semiscale and LOFT facilities. In addition, Section 4.6.2 of NUREG-0623 requires each PWR vendor and fuel supplier to submit a pretest prediction of the forthcoming LOFT small-break test (L3-6) in which the reactor coolant pumps will remain running throughout the test.

Recommendations

(a) The various modes of two-phase flow natural circulation which are expected to play a significant role in plant response following a small break LOCA should be demonstrated experimentally.

(b) Appropriate means, including additional instrumentation if necessary, should be provided in the control room to facilitate checking whether natural circulation has been established.

3.2.4 PORV Failures in CE Plants

Findings

The record of PORV failures for all PWRs (13 in approximately 200 reactor-years) has demonstrated that relief valve failures are a likely cause of a small-break LOCA. The loss of load transients which most frequently occur will open the PORVs at CE-designed plants unless an early reactor trip limits the pressure excursion to a value less than that of the PORV set point. Thus, the selection of reactor trip and relief valve setpoint has a strong effect on relief valve challenge rate.

The transient analysis provided by CE indicates that opening of the relief valves in the case of a feedwater transient is unlikely; however, the relief valves will open for loss of load events which do not produce an anticipatory reactor trip.

Based on our review of operational data and analyses of anticipated transients, we have concluded that the failure of a PORV to close, subsequent to opening due to high pressure, is a likely cause of a small-break LOCA. One possible way to eliminate the risk associated with the failure of a PORV to close is to operate the plants with the block valves closed, as is done at the Palisades plant. This mode of operation, however, could result in an increase in the lift frequency of the safety valves. Since we have not been provided information on the failure rate of safety valves, we could neither evaluate the desirability nor the acceptability of this mode of operation.

Recommendations

(a) Licensees should provide a system which closes the block valve automatically whenever the reactor coolant system pressure decays to a preset value subsequent to a PORV opening. This system should include an override feature so that pressure relief can be accomplished at lower pressures, as necessary.

(b) Each licensee should perform a confirmatory test of the automatic block valve closure system installed in accordance with item (a), above.

(c) CE should prepare a report documenting the actions which have been taken to decrease the probability of a small-break LOCA caused by a stuck open PORV. The report should include an evaluation describing how the actions taken constitute a significant improvement in reactor safety.

(d) Any future failure of a PORV or safety valve to close should be reported to the NRC promptly. All future challenges of the PORVs and safety valves should be documented in the annual report.

(e) The staff's implementation of the Lessons Learned Task Force long-term recommendations should pursue the interrelationship of safety and relief valves in its future study dedicated to safety and non-safety grade systems. Refer to Recommendation 9 of NUREG-0585. This study should include an evaluation of the elimination of the PORV function. We expect this study to be a part of the NRC TMI-2 Action Plans.

3.2.5 Audit Calculations

The following conclusions and recommendations are based on our audit of the analyses performed by CE.

Findings

(a) The calculated system response to the three break size analyzed demonstrates the ability of the computer program CEFLASH-4AS to predict the expected behavior of a depressurization, a pressure hang-up, and a repressurization transient. Reasonable assurance is therefore provided that the calculated system response using CEFLASH-4AS may be used as a base for guidelines in developing operator training and plant emergency procedures to be used to detect and to mitigate the consequences of a small-break LOCA.

(b) The core uncovery and subsequent heatup calculations performed with the RELAP4 and CEFLASH-4AS programs are unrealistic and could result in nonconservative evaluations of the fuel cladding response in these codes. The treatment of steam superheat and steam generation rates in RELAP4 and CEFLASH-4AS could result in a peak clad temperature calcuations several hundred degrees too low.

(c) The model of the steam generator secondary is important for the evaluation of transients which do not consider auxiliary feedwater.

Recommendations

(a) Appropriate changes to the CEFLASH-4AS and the RELAP4 programs and/or to the modeling procedures employed should be made to eliminate the potential uncertainties in the heatup calculations, or CE should justify the correctness of their present calculations. It should be noted, however, that peak clad temperatures computed in these codes are not used as the definitive predictions for this parameter. This prediction is made in other more detailed codes designed for this purpose.

(b) The effects of safety injection tank injection on the transient performed with the RELAP4 and CEFLASH 4AS computer programs should be further investigated to determine the amount of condensation realistically expected, and to determine the effect on heat-up and core uncovery.

(c) Since the model of the steam generator secondary system is important for evaluating transients which do not consider auxiliary feedwater, appropriate changes to the RELAP4 and CEFLASH 4AS programs and to the modeling procedures employed should be made to more realistically represent the steam generator's behavior.

3.3 Operator Training

Operator training has evolved over the last 10 to 15 years from concentrated on-the-job training programs, with little time allotted to formal training, to the more formal Commission-approved programs of today. In addition, the expanded use of simulators has contributed significantly to the quality of operator training.

In the past, training programs have underemphasized nonstandard passive conditions such as misaligned systems, undetected failures of engineered safety features (ESFs) equipment and multiple failures. Regardless of the merits of the single failure criterion as a design basis, it should not be considered as a limiting basis for training purposes.

Our review of operator training is discussed in Appendix IX. Significant findings and recommendations are summarized below.

3.3.1 Expanded Use of Simulators in Operator Training

Findings

It is generally acknowledged by the NRC staff and by the operators themselves that simulator operation is a valuable part of operator training. This consensus is rein-

forced in EPRI Report No. NP-309, which reads in part, "Operations regard simulators as the best vehicle for obtaining operational training . . . it helps you to see casualty modes." It is also apparent from the TMI-2 accident that transient recognition by the operator, and the operator response based upon his understanding of the plant status, are essential to reactor safety. We believe that a primary part of operation training in event recognition and response should be actual "hands-on" operation in response to various plant transients and accidents. This sort of experience can be gained, to some degree, through actual plant operation and walk-throughs, but must include event simulation and actual operator response and observation to be most meaningful.

Recommendations

Based on our review of operator training at operating reactors, we recommend that:

(a) All licensed operators be required to participate in a simulator training program to observe such events as a stuck-open power-operated relief valve (PORV) and natural circulation. Training on protecting the core should be emphasized on all plants, including the means to recognize that an adequate heat sink, ample primary system inventory, and intact primary and secondary systems exist. Simulator training programs should be reviewed to assure that they include the operator errors and equipment failures that contributed to the TMI-2 accident. An evaluation of the simulator control board design and simulated response as compared to the operator's individual response and actual control board design must be made on a case-by-case basis. The differences which may exist must be addressed as part of the operator's training so that negative training feedback will not result.

(b) Plant simulators used for operator training should offer, as a minimum, the following small break LOCA scenarios:

- continuous depressurization,
- pressure stabilized at a value close to secondary system pressure, repressurization,
- stuck-open PORV, and
- stuck-open letdown valve.

Each of these cases should be simulated with the reactor coolant pumps running and with the pumps not running. The first three events should be simulated for both cold and hot leg breaks. In addition to the usual single failures assumed in the ECCS and feedwater system, extended loss of feedwater (main and auxiliary) should be simulated in conjunction with these events.

3.4 Operating Procedures

Operating and emergency procedures are developed in accordance with Regulatory Guide 1.33, Appendix A, "Quality Assurance Program Requirements (Operation)," and Sections 5.3.2 and 5.3.9 of ANSI 18.7 and ANS 3.2, entitled "Administrative Controls and Quality Assurance of Operation of Nuclear Power Plants."

Each normal operating procedure involves the use of checklists and is based on a controlled evaluation, giving final conditions as goals to achieve. On the other hand, abnormal and emergency procedures are completely different in that the operator is now confronted with automatic responses for which he may have to take manual actions. Therefore, when writing the abnormal and emergency procedures, consideration should be given to the real time that it takes for systems to respond and for the operator to perform a manual function. (The preceding material was previously stated in NUREG-0560.)

As discussed in Appendix IX, the staff requested the plant emergency procedures for loss-of-coolant, steam line break, loss of offsite power and loss of feedwater events from all operating reactor licensees. Most licensees with CE-designed operating plants complied with this request. A review of emergency procedures on CE-supplied power reactor facilities (some prior to TMI-2, some after) indicated deficiencies in providing specific operator guidance to monitor, interpret, and respond to critical plant conditions. In general, the procedures failed to guide the operator to monitor and interpret available instrumentation to verify that (1) reactor coolant system inventory is being maintained, (2) the core has adequate flow for heat removal, and (3) a heat sink is available and operating, therefore assuring the capability for heat removal from the reactor coolant system. For example, the emergency procedures for loss-of-coolant accidents (LOCAs) (prior to TMI-2) state that decreasing pressurizer pressure and level are indicative of a LOCA. As emphasized at TMI-2, this is clearly not the case for breaks (or stuck-open valves) in the pressurizer steam space, for which pressurizer level will not be a valid representation of reactor coolant system inventory. IE Bulletins issued have directed licensees to take action on these and other areas. Licensee responses to these bulletins are currently being evaluated and separate reports are being issued containing the staff's evaluation. Licensees have in general revised, or are revising, procedures as a result of these IE Bulletins. The Combustion Engineering Owners Group, in conjunction with CE, has developed generic guidelines for emergency procedures regarding small break LOCAs. We have reviewed the proposed guidelines and found them acceptable for incorporation into the plant procedures by each licensee (see Appendix IX for details of our review). These approved guidelines contain an acceptable set of criteria for termination of high pressure injection and acceptable criteria for reactor coolant pump trip.

3.4.1 Review of Procedures (NRC)

Finding

Procedures are important to the operator training and decision making process during the course of a transient or accident.

Before the TMI-2 accident, little attention was paid to operational procedures, especially to emergency procedures and their relationship to the supporting safety analyses. Unambiguous diagnostics and proper precautions and prohibitions were not always considered in the development of procedures.

Recommendation

The NRC should become more involved in the review of procedures including their correlation with the assumptions made in the supporting safety analyses. The procedures should include recognitions of the event, precautions, actions, and prohibited actions.

3.4.2 Review of Procedures (NSSS Vendors)

Finding

The NSSS vendor usually does not check a customer's plant operating procedures to determine whether the vendor's operational guidelines have been properly incorporated into the plant procedures.

Recommendation

Independent of the NRC review of procedures, the NSSS vendor should confirm that the vendor's operational guidelines have been properly incorporated into the customer licensee's plant operating procedures. Any exceptions which the customer-licensee may have taken to the vendor's guidelines should be documented with appropriate justification. Copies of the correspondence regarding such exceptions should be transmitted to the NRC for information.

3.4.3 Symptom-Based Emergency Procedures

Finding

Emergency operating procedures currently in use at operating plants have evolved on an "event-specific" basis. Symptom-based emergency procedures, which are categorized according to general plant symptoms and include the essential features of several separate exising procedures, could make use of the fact that the initial operator responses to the associated events are similar.

The principal advantages of the symptom-based emergency procedures over the event-specific procedures are (1) the procedures as a whole would be simplified significantly and would, therefore, not require the operator to make a detailed diagnosis of the plant conditions prior to consulting an emergency procedure, (2) the total number of emergency procedures with which the operator would have to contend during an emergency would be reduced significantly, and (3) such an exercise would necessitate that the licensees look again at their emergency procedures in a more integrated manner.

We believe that the aforementioned advantages would contribute significantly to the operator's ability to maintain the plant in a safe condition in the event of an emergency.

Recommendation

Licensees whose emergency procedures have been developed on an event-specific basis should restructure and reformat them on a symptom basis.

3.5 Human Factors

3.5.1 Monitoring Control Board and Other Instruments

Finding (from NUREG-0560)

The operator must understand his responsibilities during abnormal and emergency conditions. The design basis for the plant has provided that, in the event of emergencies, suitable actions will be automatically initiated by the safety systems. The operator's initial responsibility is to monitor the parameters of interest and verify that appropriate safety systems have been actuated. If the appropriate actuations have not occurred, the operator must intercede and perform the actions necessary to implement them. The operator is trained to believe his instrumentation. However, he must be trained not to rely on a single instrument, since any single indication may be erroneous or misleading under certain conditions. The reason for this precaution was clearly illustrated at TMI-2, where operator attention was focused on the pressurizer level indication. In virtually all situations, other instrumentation can be used to corroborate or refute the validity of a given instrument.

Recommendation (from NUREG-0560)

The operator should monitor the control board and evaluate all parameters of concern by appropriate checking of other instrumentation. He must perform this cross-check to verify instrument display. If he has additional manual actions to perform, he may reduce his observations on other system parameters that may lead him to tunnel vision. This recommendation should be implemented in operator training programs.

APPENDIX I

PLANT COMPARISONS

1. GENERAL

This appendix compares the more salient features of operating nuclear power facilities that use a nuclear steam supply system (NSSS) designed by Combustion Engineering (CE). The information contained herein was obtained from several sources, including CE, licensees, and relevant FSARs. The information contained in the tables of this appendix serves as a reference source for much of this report. In addition, Table I-3 compares thermal hydraulic parameters of CE-designed plants with W- and B&W-designed plants.

At the present, there are eight operating nuclear power facilities that utilize a CE designed NSSS; namely, Fort Calhoun, Maine Yankee, Palisades, Millstone Unit 2, Calvert Cliffs Units 1 and 2, St. Lucie Unit 1, and Arkansas Nuclear One, Unit 2. Except for Maine Yankee, all these facilities are very similar in configuration and generally conform to the arrangement shown in Figure I-1. In contrast to the arrangement shown in Figure I-1, the primary coolant system for Maine Yankee consists of three loops; each loop having a dedicated steam generator and reactor coolant pump. In addition, the charging pumps at Maine Yankee provide for high head emergency core cooling whereas the other units are provided with separate high pressure safety injection pumps for emergency core cooling. Although not detailed in Figure I-1, a typical operating plant with a CE-designed NSSS would be arranged such that the bottom tube sheets of the steam generators are about 14 feet above the top of the active core.

(1) Reactor Coolant Pumps

The reactor coolant pumps used in the above listed facilities were all manufactured by Byron Jackson. Thus, although the pumps may have different ratings (e.g., flow rate), CE states that they are all of the same type class and hence they are generically identical in design.

(2) Steam Generators

Figure I-2 shows the major components and dimensions of a typical CE steam generator. Table I-1 summarizes the primary and secondary side volumes and heat transfer areas of the steam generators used at the above listed facilities, and the dryout times for these steam generators are given in Table I-2.

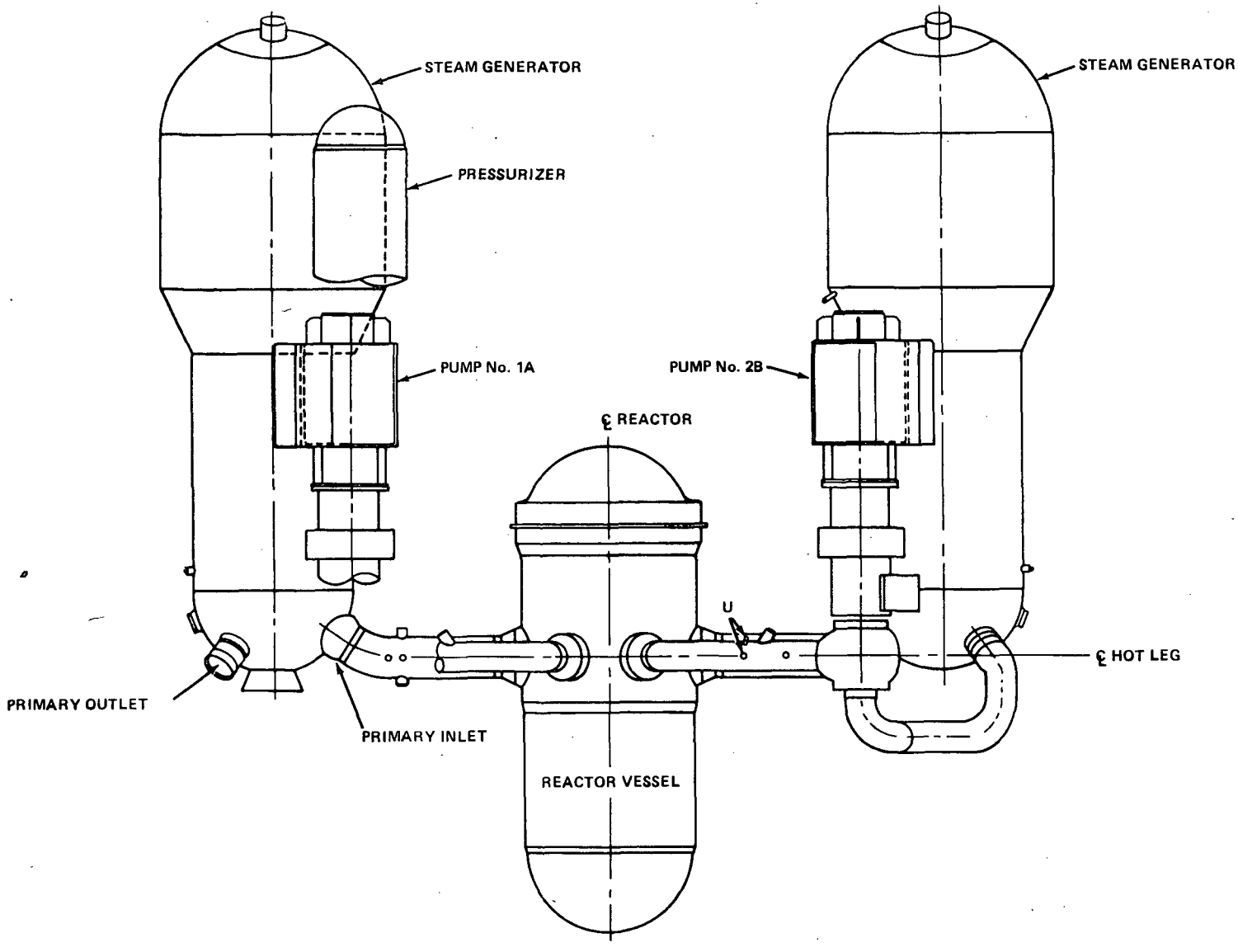

FIGURE I-1 REACTOR COOLANT SYSTEM ARRANGEMENT, CE OPERATING REACTORS

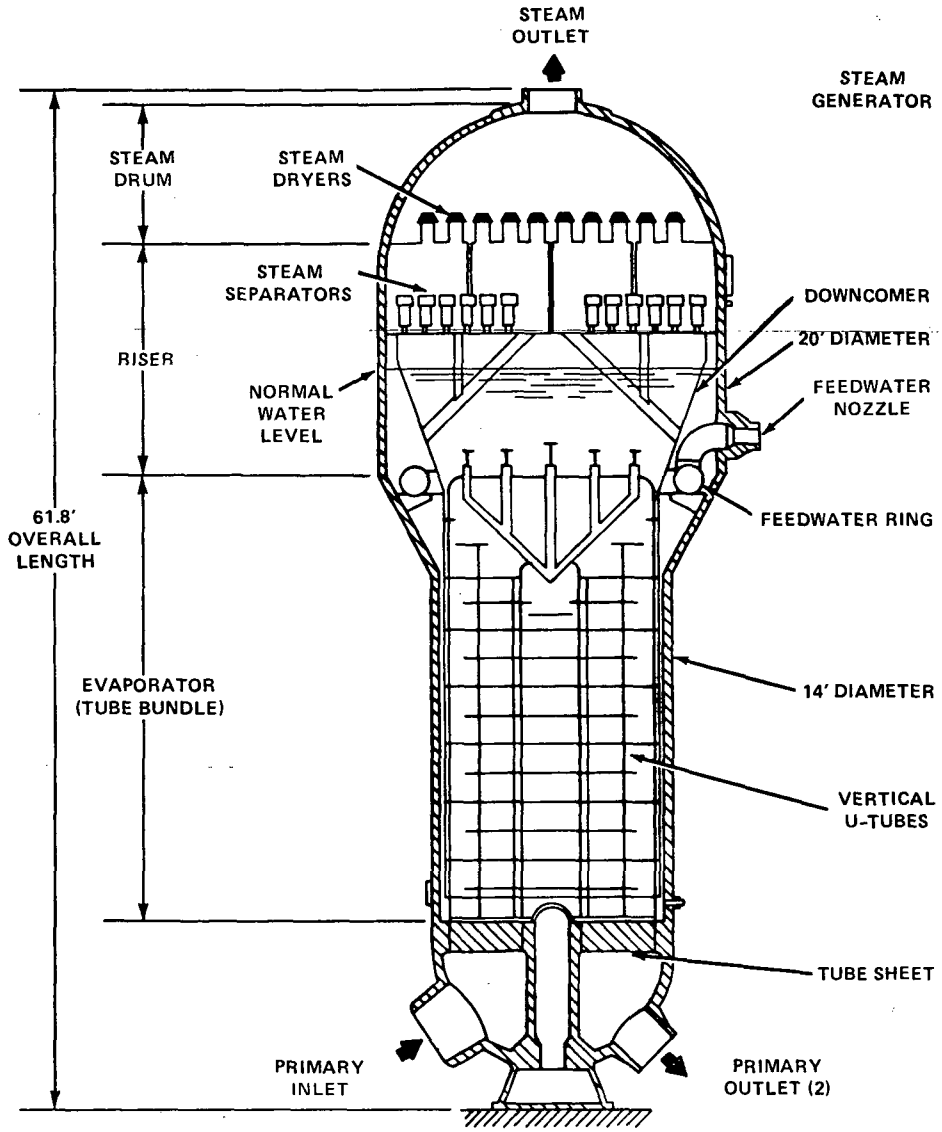

FIGURE I-2 STEAM GENERATOR, CE OPERATING PLANTS

TABLE I-1

COMBUSTION ENGINEERING STEAM GENERATORS

	Total Primary Side Volume, ft^3	Total Secondary Side Volume, ft^3	New Construction Heat Transfer Area, ft^2
Maine Yankee	1032	5139	58165
Palisades	1572	7074	79310
Calvert Cliffs 1&2	1646	8006	90232
Millstone 2	1527	8006	90232
St. Lucie 1	1527	8006	90232
ANO-2	1588	7957	86116
Fort Calhoun	850	4411	47660

TABLE I-2

COMPARISON OF KEY OPERATING CHARACTERISTICS OF
CE PLANTS RELATIVE TO LOSS OF FEEDWATER TRANSIENT

PARAMETER / PLANT	ARKANSAS POWER AND LIGHT CO., ARKANSAS NUCLEAR ONE-2	BALTIMORE GAS AND ELECTRIC CO., CALVERT CLIFFS	OMAHA PUBLIC POWER DISTRICT, FT. CALHOUN	MAINE YANKEE ATOMIC POWER CO., MAINE YANKEE	NORTHEAST UTILITIES, MILLSTONE 2	CONSUMERS POWER CO., PALISADES	FLORIDA POWER AND LIGHT CO., ST. LUCIE
Core Thermal Power, MWT/# of Loops	2815/2	2570/2	1420/2	2630/3	2560/2	2530/2	2560/2
Reactor Coolant System Volume, ft^3 (Including Pressurizer)	9976	11101	7066	11026	11015	12400	11101
Volume of Pressurizer	1200	1500	900	1500	1500	1500	1500
PORV Capacity, lb/hr/ MWt/Setpoint, psi	NONE	56.7 2385	69.7 2392	57.0 2385	59.8 2380	60.5 2385	59.8 2385
Number of PORVS, Manufacturer/Model No.	NONE	TWO DRESSER 31533VX	TWO DRESSER 31533VS	TWO DRESSER 31533VS-30	TWO DRESSER 31533VX-30	TWO DRESSER 31533VX	TWO DRESSER 31533VS-30
Number of Safety Valves, Total Capacity, lb/hr/ MWt/Setpoint, psi	TWO 280.6 2500	TWO 222.2 2485	TWO 281.7 2485	THREE 228.1 2485	TWO 231.3 2485	THREE 272.7 2485	THREE 234.4 2485

TABLE I-2 Continued

PARAMETER / PLANT	ARKANSAS POWER AND LIGHT CO., ARKANSAS NUCLEAR ONE-2	BALTIMORE GAS AND ELECTRIC CO., CALVERT CLIFFS	OMAHA PUBLIC POWER DISTRICT, FT. CALHOUN	MAINE YANKEE ATOMIC POWER CO., MAINE YANKEE	NORTHEAST UTILITIES, MILLSTONE 2	CONSUMERS POWER CO., PALISADES	FLORIDA POWER AND LIGHT CO., ST. LUCIE
Shut off head,	3500	2900	3200	5700	2800	2900	2900
ft/psi	1517	1257	1387	2471	1213	1257	1357
Gpm @ 1000 psig	500	400	280	715	475	400	425
Gpm @ 1600 psig	0	0	0	550	0	0	0
Positive displacement charging pump capacity gpm	128	132	120	450	132	133	132
Steam Generator Time to dryout-min	14	16	16	14	15	16	16
Per turbine/Per Motor Aux Feed Cap., % of design	2.0%/2.0%	2.3%/N/A	1.6%/1.6%	1.8%/1.8%	2.0%/1.0%	1.5%/1.5%	2.4%/1.3%
HI Containment Pressure, psig	3.4	4.25	4.25 to 4.5	5	3.8	5 to 5.75	5
Low Pressurizer Pressure, psig	1725	1600	1600	1585	1620	1593	1600
SG ΔP, psi	N/A	N/A	N/A	N/A	N/A	N/A	N/A
HI Steam Flow w/Lo-Lo T_{avg} or Low Steam Pres.	N/A	N/A	N/A	N/A	N/A	N/A	N/A

TABLE I-2 Continued

PARAMETER / PLANT	ARKANSAS POWER AND LIGHT CO., ARKANSAS NUCLEAR ONE-2	BALTIMORE GAS AND ELECTRIC CO., CALVERT CLIFFS	OMAHA PUBLIC POWER DISTRICT, FT. CALHOUN	MAINE YANKEE ATOMIC POWER CO., MAINE YANKEE	NORTHEAST UTILITIES, MILLSTONE 2	CONSUMERS POWER CO., PALISADES	FLORIDA POWER AND LIGHT CO., ST. LUCIE
Stretch Power, MWt	N/A	2710	1565	2640	2710	2560	2710
Number of Core Assemblies	177	217	133	217	217	217	217

(3) ECCS and Other Important Considerations

The ECCS high pressure pump data, ECCS initiation set points, pressurizer power operated relief valve (PORV) and safety valve capacities and set points, positive displacement charging pump capacities, and stretch power level are given in Table I-3. The emergency core cooling systems for the aforementioned operating plants were not reviewed as a part of this report for conformance with current ECCS standards.

Except for Maine Yankee, none of the CE-designed NSSS units has high pressure safety injection pumps capable of delivering flow at pressurizer PORV or safety valve opening pressure set points. In the event of a loss-of-all-feedwater event, high pressure flow must be delivered to the primary system in excess of or at the decay heat boiloff rate to prevent core uncovery. Appendix X provides a more detailed discussion of the analyses of the loss of-all-feedwater event. Table I-2 lists the maximum capacities of the positive displacement charging pumps for CE-designed operating plants. If the steam generators are assumed to dryout in 15 minutes and if a PORV is assumed to stick open once it opens to relieve primary pressure, then at approximately 1 hour the core will begin to uncover if no other action is taken. Only the capacity of the charging pumps on Maine Yankee exceed core boiloff at 1 hour. Although not analyzed, all of the CE units but ANO-2 have PORVs which could be utilized in conjunction with positive displacement charging pump injection to possibly lower primary pressure sufficiently so that the high pressure safety injection pumps can deliver borated water to the core.

2. ECCS CHALLENGES

Table I-4 lists the frequency of reported challenges to the safety injection system for CE reactors and categorizes these challenges according to their cause. A case where ECCS initiation setpoints were not actually exceeded but an ECCS injection occurred anyway is defined as a spurious ECCS injection event. All other ECCS injections are categorized as ECCS challenges.

CE reactors have experienced limited ECCS initiations during their operating history, (i.e., less than one per reactor year). The B&W units at Oconee report approximately two initiations per reactor year. Those ECCS initiations generated when the ECCS setpoints were exceeded were in general caused by valve failure(s) in the secondary system or reactor trips which rapidly cooled and depressurized the primary system. The frequency of ECCS actuations on CE-designed plants seems consistent with FSAR safety analyses which indicate that the emergency core cooling systems (safety injection systems) are required to operate for some transients.

TABLE I-3

COMPARISON OF PRIMARY THERMAL-HYDRAULIC PARAMETERS

Vendor	CE	CE	CE	CE	CE	CE	CE	B+W	W
Reactor	ANO-2	CALVERT CLIFFS 1 & 2	FORT CALHOUN	MAINE YANKEE	MILLSTONE 2	PALISADES	ST. LUCIE	TMI-2	NORTH ANNA 1 & 2
Design Power, MWt	2815	2700	1420	2630	2560	2530	2560	2772	2775
T_{in}, °F	553.5	543.4	534.6	538.9	538.9	545.0	538.9	557.0	546.8
T_{out}, °F (Core)	614	597.4	590.3	592.0	594.9	592.0	594.9	610.6	614.6
T_{out}, °F (Vessel)	612	595.4	587.3	590.0	593.9	591.0	593.9	607.7	613.8
Core Pressure psia	2250	2250	2100	2250	2250	2100	2250	2200	2250
Core Flow 106 lb/hr	116.2	117.5	68.5	117.5	117.5	121.3	117.5	137.8	100.5
Core Flow Area, Ft2	44.7	53.5	32.6	53.5	53.5	58.7	53.5	49.2	41.5
High Pressure Injection Initiation Setpoint, psia	1725	1600	1600	1585	1620	1593	1600	1615	1765
Coolant Subcooling At Average Injection Pressure, °F	31.3	36.6	45.1	40.6	40.6	36.5	39.6	24.0	36.4
Subcooling At Core Outlet (Normal), °F	39.0	55.6	52.7	61.0	58.1	51.0	58.1	39.0	38.4

TABLE I-4

EMERGENCY CORE COOLING SYSTEM INITIATIONS

Plant	Required ECCS Initiations	Inadvertent ECCS Initiations
ANO-2	0	2
Calvert Cliffs 1&2	1	0
Fort Calhoun 1	1	0
Maine Yankee	1	1
Millstone 2	0	1
St. Lucie 1	4	3
Palisades	5*	0
	12	7

*Records reviewed for 1977 through 1979 showed all ECCS initiations were a result of exceeding low pressurizer pressure setpoint due to rapid primary system cooldown following plant trip.

APPENDIX II

MAIN FEEDWATER SYSTEMS IN CE-DESIGNED PLANTS

The main feedwater systems among the eight licensed Combustion Engineering-designed plants (located on seven different sites) are functionally very similar. There are no design differences in the main feedwater system between units of the multi-nuclear plant site. Four of the plants use Westinghouse turbine generators and four use General Electric turbine generators. Since the nuclear plants were designed by four different architect-engineering firms, there are some design differences but the functional performance remains the same. Table II-1 provides an indication of the similarities and differences. The loss of feedwater at TMI-2 has been attributed to difficulty occurring in the condensate demineralizer within the feedwater system. This section will be primarily limited to a discussion of the condensate demineralizers in the Combustion Engineering-designed plants.

Normally, all condensate is processed through the demineralizer (or full flow). However, periodically the pressure losses through the demineralizers become excessive. The flow is then bypassed around the demineralizer while the demineralizer is being serviced. Of the eight Combustion Engineering-designed nuclear plants, four plants use full flow demineralizers in their main feedwater system design. The demineralizer bypass for those plants that have incorporated demineralizers into their design are discussed below:

Calvert Cliffs, 1&2

The condensate demineralizers are automatically bypassed by a motor operated valve on a high differential pressure across the demineralizer.

The motor operated valve will fail "as-is" with the loss of power.

Palisades

The condensate demineralizers are bypassed manually by an air-operated valve. The valve would remain "as-is" on loss of air.

Millstone 2

The condensate demineralizers are manually bypassed.

The results of the staff's investigations for Combustion Engineering-designed plants indicate that failures in the demineralizers do not represent a significant problem

TABLE II-1 MAIN FEEDWATER SYSTEMS IN CE-DESIGNED PLANTS

Component	Plant	Calvert Cliffs 1&2	Palisades	Millstone 2	Ft. Calhoun 1	Maine Yankee	St. Lucie 1	ANO-2
Pumps:	Type	Centrifugal (2)	Centrifugal (2)	Centrifugal (2)	Centrifugal (3)	Centrifugal (2)	Centrifugal (2)	Centrifugal (2)
	Capacity	50% full power 15,000 gpm	13,500 gpm @ 5000 rpm	Nominal 55%- 15,000 gpm	8000 gpm @ 1740 ft.	60% full power 14,000 gpm @ 1031 psig	60% full power 14,100 gpm	Design flow 14,500 gpm @
	Shutoff Head	2710 ft @ 5130 rpm	2640 ft @ 5000 rpm	2100 ft	2370 ft	1543 psig	1780 ft	2700 ft
Drives:	Type	2 Steam	2 Steam	2 Steam	3 Electric	2 Electric	2 Electric	2 Steam
	Supply/exhaust	1. Main steam extraction 2. Hot reheat/ main condenser	1. Main steam 2. HP turbine exhaust/ main condenser	1. Main steam (startup) 2. Extraction stm (N oper.) main condenser	NA	NA	NA	1. Exit steam 2. Aux. steam 3. Main steam/ main condenser
	Trips:	1. Exhaust valve closed	1. Low suction pressure	1. Low suction pressure	1. Loss of lube oil pressure	1. Low suction pressure (280 psig)	1. Low suction press. (145 psig after 1 sec delay)	1. MSIS
		2. Bearing lube oil pressure	2. Condenser low vacuum	2. Low oil pressure	2. Lock-out relaying	2. Low lube oil press. (10 psig)	2. Low lube oil press. (4 psig)	2. Low oil bearing press. turbine
		3. Thrust bearing wear	3. High thrust	3. Low flow	3. Overcurrent	3. Bus undervolt.	3. Elect. fault (overcurrent breaker trip undervoltage)	3. Thrust bearing wear
		4. Low suction pressure	4. Overspeed	4. High discharge pressure	4. Time overcurr.	4. Overcurrent	4. Feedflow > 50% with 1 MFP and 1 condensate pump	4. Hi discharge pressure
		5. Hi discharge pressure	5. Manual	5. Thrust bearing wear	5. Manual	5. Phase diff.	5. No condensate pumps	5. Hi exhaust pressure
		6. Low condenser vacuum		6. Low vacuum		6. Overcurrent to ground	6. Low suction flow (3000 gpm for 10 sec delay)	6. Main turbine trip
		7. Hi turbine speed		7. Manual		7. Manual	7. Manual	7. Loss suction pressure

TABLE II-1 (Continued)

Component / Plant	Calvert Cliffs 1&2	Palisades	Millstone 2	Ft. Calhoun 1	Maine Yankee	St. Lucie 1	ANO-2
Trips (Cont'd):	8. Turbine trip 9. Hi water level turbine casing 10. Hydraulic discon. coupling disengaged 11. Manual						8. Low flow feedwater 9. Pump bearing low oil press. 10. Manual
Condensate Pumps: No./Strainers	3/yes (suction for start-up)	2/None	3/None	3/yes (suction on 2 of 3 pumps)	3/yes (suction)	2/None	4/yes (suction)
Demineralizers: No./No. for Full Power/Mfg.	5/4/Graver	4/3/DeLaval	7/6/Infilco	None	None	None	None
Bypass/Operation/ Fail Position	Yes/MOV auto Hi ΔP/as-is	yes/air oper valve manual/ as-is	Yes/manual/NA	NA	NA	NA	NA
FW Heaters: Bypass/ Operation/Fail Position	Yes/manual/NA	Yes/manual/NA	Yes/manual/NA	No/NA/NA	No/NA/NA	Yes/manual/NA	Yes/Manual/NA
Booster Pumps: No.	3	None	None	None	None	None	None
Control Valves: Auto Isolation Capabilities	1. Turbine trip auto closes CV 2. S.G. isolation signal auto closes FW isolation valves	Electro-pneumatic control valve	Feedwater CV fail as-is on loss of air	CIAS-closes FW contain. isol. valves	1. Air operated bypass valve auto closes on turbine trip 2. Air piston operated CV auto closes on turbine trip	1. Block valve auto isolates on MSIS or SIAS 2. FW pump disch. valve auto isol. on MSIS or SIAS	Control valve auto isolates MSIS

that will contribute to the number of loss of feedwater events that occur at a facility. However, only one aspect of the main feedwater system has been addressed above.

Other component failures in the main feedwater system could result in the loss of feedwater event. These include spurious pump trip signals, inadvertent valve closures, loss of condensate pump or booster pumps, clogged strainers, loss of condenser vacuum, loss of circulating water to condenser, and the loss of feedwater heaters with failure to bypass. The loss of feedwater transient at TMI-2, along with other failures, was instrumental in initiating the accident sequence. A loss of feedwater event followed by failure to inject any auxiliary feedwater in 20-45 minutes could result in potentially severe consequences. For this reason, the staff has investigated the auxiliary feedwater system design and recommended changes, where necessary, which would reduce the unavailability of this system.

As an additional defense-in-depth consideration, the staff recommends that a long term study of the main feedwater system design and its functional performance capabilities be conducted to determine whether means are available to reduce the potential for or the frequency of loss of feedwater events.

Survey of Feedwater-Related Events

The staff reviewed occurrences involving feedwater malfunctions at each of the operating CE-designed Plants. When an incident violates plant technical specifications, it is reported in an Licensee Event Report (LER). Generally, events occurring during startup and other minor equipment failures are not reportable in the LER.

Each licensee with a CE-designed plant provided information pertaining to all events that resulted in a complete loss of main feedwater over the last three years of operation. These events are described in the subsequent paragraphs. Events which occurred during reactor startup and those that did not result in a feedwater transient were not reported.

Arkansas Nuclear One, Unit 2 (ANO-2)

ANO-2 has not undergone any complete loss of main feedwater events. This plant is currently in its initial startup program.

Calvert Cliffs 1 and 2

Calvert Cliffs Unit 1 has had two loss of feedwater events and Unit 2 has had six such events as listed below. In all events, the auxiliary feedwater system was used to restore and maintain steam generator water level to provide a heat sink for the reactor coolant system. No safety consequences resulted as all systems performed their safety functions.

Unit No.	Date	% Power--Cause of the Event
1	11/16/78	At 82% power, malfunction of the Condensate Precoat Filter caused both main feedwater pumps to trip due to low suction pressure. The reactor tripped due to low Steam Generator Water Level.
1	12/13/78	At 95% power, inadvertant opening of the Precoat Filter drain valve caused both main feedwater pumps to trip on low suction pressure. The reactor tripped due to low Steam Generator Water Level.
2	12/10/76	At 14% power, operation of the Condensate Demineralizer System caused a pressure surge which resulted in both main feedwater pumps tripping on low suction pressure. The reactor tripped on low Steam Generator Water Level.
2	01/11/77	At 90% power, air binding of the Condensate pump (due to improper venting of the suction strainer spool piece) caused both main feedwater pumps to trip on low suction pressure. The reactor tripped on Low Steam Generator Water Level.
2	04/15/77	At 45% power, an operation error resulted in tripping the only operating main feedwater pump causing a reactor trip on Low Steam Generator Water Level.
2	04/11/78	At 66% power, the only operating main feedwater pump tripped when the 500 kV "Black Bus" was de-energized due to a relay fault. The reactor tripped on Low Steam Generator Water Level.
2	04/13/78	At 66% power, the only operating main feedwater pump tripped due to the same relay fault described in 04/11/78 above. The reactor again tripped on Low Steam Generator Water Level.
2	08/14/78	At 96% power, a level controller malfunction on the Heater Drain Tank caused a low suction pressure trip of both main feedwater pumps. The reactor was manually tripped.

Ft. Calhoun

Ft. Calhoun has had a total of four loss of feedwater events as listed below. During these events, the auxiliary feedwater system performed as designed.

Unit No.	Date	% Power--Cause of the Event
1	2/21/76	Power not stated, the feedwater system was lost due to the loss of offsite power.
1	6/16/76	Power not stated, as feedwater regulating valve failed causing feedwater pump trip followed by a reactor trip and turbine trip.
1	8/30/76	Power not stated, same as the 6/16/76 event.
1	8/22/77	Power not stated, a brief loss of power (the 161Kv supply to reactor unit) caused the loss of the feedwater system.

Millstone Unit 2

Millstone Unit 2 has had four loss of feedwater events as listed below. In all events, the auxiliary feedwater system was available to perform its safety function when required as a result of the plant transient. No significant safety consequences resulted.

Unit No.	Date	% Power--Cause of the Event
1	3/23/76	At 97% power, while surveillance testing the turbine CIVs, the value failed to reopen. The steam flow redistribution resulted in a loss of efficiency in one steam generator feed pump. When the pump turbine speed was increased, first one steam generator feed pump, then the other, tripped on low suction pressure. The reactor and turbine were manually tripped. Steam generator level went out of the indicating range low and was restored approximately one hour later.
1	7/21/76	At 100% power, an LNP was initiated when the "D" circulating water pump was started. The undervoltage relay settings for the ESAS had been raised just prior to the incident. The MSIVs were shut to remove steam from the turbine building; this in effect caused a loss of the steam generator feed pumps. The reactor coolant system heat sink was maintained by the use of the steam driven auxiliary feed pump. Steam generator levels had reached a minimum and were increasing after approximately six minutes. The reactor tripped when power was lost to the CEDMs.

1	9/21/76	At 100% power, while performing maintenance on the condenser pit sump level switches, the three running circulating water pumps were tripped and could not be restarted. With the loss of condenser vacuum imminent, the reactor and turbine were manually tripped. The Sequence of Events Log indicates that the steam generator feed pumps tripped after approximately 12 seconds. Auxiliary feedwater was initiated and maintained steam generator levels.
1	5/3/78	At 92% power, the level control valve for a feedwater heater failed open. This resulted in a feedwater transient that tripped the steam generator feed pumps on low suction pressure. Steam generator water levels stabilized after approximately 8 minutes when one steam generator feed pump was restarted. The reactor tripped on low steam generator water level.

Maine Yankee

Maine Yankee has had only one loss of feedwater event as described below. During the event, the plant's emergency diesel generators and the auxiliary feedwater system performed their safety functions when called upon. No significant safety consequences resulted.

Unit No.	Date	% Power--Cause of the Event
1	3/23/76	At 48% power a main transformer fault led to a plant trip accompanied by a loss of offsite power. Upon the loss of offsite power, both emergency diesel generators automatically started to provide power to the plants emergency buses. Offsite power was reestablished within about one minute. Condenser circulating water pumps were unavailable, steam dump to the condenser was terminated. Due to low power level, decay heat was minimal, steam generator level shrink was small (levels remained above the reactor trip setpoints). Because of the high steam generator levels, auxiliary feedwater flow from the steam-driven pump was kept to a minimum.

Palisades

The Palisades plant has had 16 loss of feedwater events as described below. In all events, except one, the safety-related systems functioned normally. During this one event, the steam generator tubes became uncovered. Although it required approximately 8 hours to regain the lost water inventory, information is not available as to cause for the extended refill time. No significant safety consequences resulted.

Unit No.	Date	% Power--Cause of the Event
1	5/10/76	At 25% power, low suction pressure caused a feedwater pump trip. No other information available.
1	1/17/77	At 100% power, the high-level dump valve on the moisture separator and the reheater drain tank failed open. This resulted in a tank low level and the heater drain pumps tripped. The feedwater pumps tripped from low suction pressure. The reactor was manually tripped.
1	1/18/77	At 35% power, feedwater pump "A" tripped. The cause of the trip was not known. The reactor was manually tripped.
1	3/25/77	At 90% power, feedwater pump "A" tripped. The cause of the trip was not stated. The reactor was tripped by low steam generator water level.
1	3/27/77	At 82% power, an event which was the same as the 5/25/77 event caused by "B" feed pump.
1	11/27/77	At 50% power, while attempting to shift from manual to automatic control, the "A" main feedwater pump was lost.
1	4/21/78	At 50% power, a damage vibration detector tripped the "B" main feedwater pump. Steam generator water level was 20%.
1	5/11/78	Power escalation, due to the condenser and demineralizer strainer plugging, the feedwater pumps tripped on low suction pressure.
1	6/7/78	At 23% power, a malfunction of the feedwater regulator valves during changing of feedwater control from valves to the main feedwater regulator valves caused a steam generator low water level.
1	6/8/78	At 20% power, "A" low steam generator level occurred ("B" steam generator feedwater isolation valve closed). Upon opening, an erratic swing in feedwater with feedwater regulation valves in auto). Steam generator water level 24%.
1	6/13/78	At 80% pwer, the loss of automatic control on the feedwater regulator valves (changed to manual operations) caused "B" feedwater pump to trip.

1	8/7/78	At 86% power, the "B" feedwater pump tripped. No cause provided.
1	10/17/78	At 84% power, the "B" feedwater pump trip occurred coincident with operator opening Low Pressure T&T valve.
1	12/16/78	At 88% power, the "A" feedwater pump trip caused low steam generator water level. No cause provided.
1	3/3/79	At 100% power, the heater drain pump tripped and caused a feedwater pump trip on low suction pressure. Portions of steam generator tubes because uncovered. Required about eight hours to restore lost water inventory.
1	4/7/79	At 100% power, the "B" feedwater pump tripped. The cause is unknown. Portion of the steam generator tubes became uncovered. Required about one hour to restore lost water inventory. During the event a bus failed to transfer to start-up power and was manually switched to the emergency diesel generator. A delay of 1½ minutes occurred before auxiliary feedflow was established. The delay had no adverse effect on recovery.

St. Lucie, Unit 1

St. Lucie has had seven loss of feedwater events. They are described below. During all events, the safety systems functioned properly and the auxiliary feedwater system started and performed its safety function as required. No significant safety consequences resulted.

Unit No.	Date	% Power--Cause of the Event
1	5/14/76	At 30% power, the condensate recirculation control valve malfunctioned and caused auxiliary feedwater initiation when the feedwater pumps tripped on low suction pressure. The reactor tripped on a low steam generator water level.
1	5/21/76	At 50% power, same event as 5/14/76 occurred. Malfunction corrected.
1	1/3/77	At 50% power, the feedwater pump tripped. Cause unknown. The reactor tripped on a low steam generator water level.
1	6/25/77	At 100% power, an expansion joint in the condensate pump suction cracked. Auxiliary feedwater was initiated when the feedwater pumps tripped on low suction pressure. The reactor was tripped on a low steam generator water level.

1	8/31/77	At 60% power, starting the second feedwater pump caused flow parameter to swing, resulting in a feed water pump trip. The Auxiliary feedwater system was initiated. The reactor tripped on low steam generator water level.
1	11/22/77	At 100% power, the feedwater pumps tripped. Cause unknown. Turbine run back caused primary system pressure to increase. The reactor was tripped on high system pressure. Note: Licensee indicated that there is no record that the PORVs lifted. However, they should have opened on the high reactor coolant system pressure signal.
1	5/30/78	At 15% power, instrument racks were pumped into causing a loss of feedwater pump. The auxiliary feedwater system was initiated. The reactor tripped on a low steam generator water level.

Table II-2 lists the causes associated with the various loss of main feedwater events described above and Table II-3 provides an accounting, by year, of the loss of main feedwater events.

TABLE II-2

SUMMARY, CAUSES OF LOSS OF FEEDWATER EVENTS

	Factors in Components	Number	Subsystem Total
1.	Feedwater Pumps Trips		19
	(a) Cause undefined	5	
	(b) Cause unknown	4	
	(c) Receive flow value	2	
	(d) Feedwater controls	7	
	(e) Vibration detector	1	
2.	Condensate System		6
	(a) Demineralizer	1	
	(b) Precoat filters	2	
	(c) Pumps and strainers	3	
3.	Heaters		5
	(a) Control values	4	
	(b) Pumps	1	
4.	Electrical		5
	(a). Faulting	2	
	(b) Loss of Power	3	
5.	Circulating Water System		2
	(a) Pumps	2	
6.	Turbine System		1
7.	Errors		2
		Total	40 trips

TABLE II-3

LOSS OF FEEDWATER EVENTS FOR COMBUSTION ENGINEERING-DESIGNED OPERATING PLANTS

Plant Name	Reactor Years of Operation		
	1976	1977	1978 to Date
ANO-2 (initial startup program)	-	-	-
Calvert Cliffs 1	0	0	2
Calvert Cliffs 2	1	2	3
Ft. Calhoun 1	3	1	0
Millstone Unit 2	3	0	1
Maine Yankee	1	0	0
Palisades	1	5	10
St. Lucie 1	2	4	1

CE-designed plants have experienced 40 loss of feedwater events in the last 3 years and 5 months of operation. Seven plants have 24 years of operating history.

APPENDIX III

AUXILIARY FEEDWATER SYSTEMS

1. INTRODUCTION

The Three Mile Island Unit 2 (TMI-2) accident and subsequent investigations and studies highlighted the importance of the auxiliary feedwater (AFW) system in the mitigation of transients and accidents. As part of its assessment of the TMI-2 accident and related implications for operating plants, the staff evaluated the AFW systems for all operating plants having nuclear steam supply systems (NSSS) designed by Westinghouse (W) (25 units) or Combustion Engineering (CE) (8 units). (See note below.)

The objectives of this study were to (1) identify necessary changes in AFW system design or related procedures at these plants in order to assure their continued safe operation, and (2) to identify other characteristics in the design of the AFW systems for these plants which, on a long-term basis, may require modifications. To accomplish these objectives, we:

(1) Reviewed plant-specific AFW system designs in light of current regulatory requirements, and

(2) Assessed the relative reliability of the various AFW systems under various loss of feedwater transients (one of which was the initiating event at TMI-2) and other postulated potential failure conditions by determining the potential for AFW system failure due to common causes, single point vulnerabilities, and human error.

As part of our evaluation, we performed a standard deterministic type of safety review, using as principal guidance the acceptance criteria specified in Section 10.4.9 of the Standard Review Plan (SRP)[1]. In conjunction with this deterministic review, we used event tree and fault tree logic techniques, as part of a reliability analysis to determine dominant failure modes and assess AFW system comparative reliability levels under specified types of transients. When the recommendations identified in this review are implemented, the reliability of the AFW systems for each operating plant should be improved with the degree of improvement dependent upon whether the AFW systems were initially characterized as having relatively high or low reliabilities (see Section 4.6 of this appendix for details).

The time and personnel limitations imposed on this study precluded a complete and extensive review of each AFW system. The review was based primarily upon information

Note: Studies of the AFW systems at Babcock & Wilcox (B&W) designed-operated plants were subjects of separate Commission orders and other work performed by the NRC staff.

provided by each licensee at a four-hour meeting with the staff review team (composed of a systems engineer and a reliability engineer) to review the as-built AFW system design and operation. Consequently, the results should be viewed in terms of the general conclusions and insights, and not as an absolute reliability analysis of generic or plant-specific AFW systems upon which the acceptability of these AFW system designs may be judged. This reliability assessment resulted in the development of generic and plant-specific recommendations to improve AFW system reliability. It was recognized that it would be very difficult and subject to large uncertainty if an attempt was made to quantify the reliability improvement inherent through implementation of the recommended actions. It was decided that such an effort was outside the scope of this study.

Some AFW systems in operating nuclear power plants do not meet all current staff licensing criteria contained in the Standard Review Plan. The degree of conformance varies with the age and specific plant design of the 33 units addressed in this study. For example, 10 architect/engineering organizations were involved in the plant design and construction of these 33 units. A specific objective of the staff's study was to determine whether the lack of conformance with any of these later requirements represented potential safety problems, considering the TMI-2 experience. The recommended actions identified in this study reflect areas of potential weaknesses where changes to improve AFW system reliability should be implemented.

The results of the AFW system design review and the evaluation of TMI-2 accident implications were judged to require consideration for corrective action if any one of the following conditions was identified:

(1) Common mode failures (particularly those related to human error);

(2) Single point failures; or

(3) Any dominant causes of AFW system unreliability.

Our limited review focused on the implications of the TMI-2 accident, particularly human errors and thus the staff did not reevaluate the design basis for each AFW system, nor did we focus upon all possible system interactions that could affect AFW system reliability. However, if the information suggested a potential for loss of AFW from such causes, this potential was noted during the specific plant reviews, with followup evaluations recommended to determine the need for additional actions.

In determining which safety issues required short-term licensing action versus those that could be deferred for further evaluation, we used simplified engineering evaluations and qualitative judgment of the safety significance of the various issues. In this regard, we recommended actions if their implementation would provide substantial, additional protection required for the public health and safety. The recommended actions were specific and safety-significant in their character, could be implemented in a timely manner, and would not likely be overturned or contradicted by continuing studies or investigations. Some of them may eventually be displaced, however, by more comprehensive long-term changes in nuclear power plant regulation. In some cases,

based on information or analysis developed to date, it is not clear that a basis for a decision is available. In such cases, we have judged the item to be of sufficient safety significance to require an early commitment to get studies or testing under way to provide a basis for resolution of the issue. As required, the recommended action is to obtain a commitment for a longer-term modification, study, or test by affected licensees.

2. PURPOSE AND DESCRIPTION OF AUXILIARY FEEDWATER SYSTEM

The AFW system functions as an emergency system for the removal of heat from the primary system when the main feedwater system is not available. It also plays an important role in mitigating the effects of some design basis events; for example, some small break loss-of-coolant accidents (LOCAs). The AFW system is designed to hold the plant at hot standby, or to cool down the primary system to temperature and pressure levels at which the low pressure decay heat removal system can operate. The AFW system can also be used during normal plant startup and shutdown conditions. AFW systems usually consist of a combination of steam turbine-driven and electric motor-driven pumps. The AFW system can provide, with any one pump out of service, enough water to the steam generators for decay heat removal following loss of main feedwater flow. Table III-1 provides a summary of the pump combinations, flow ratings and modes of initiation for the AFW system for each CE plant reviewed and Table III-2 for each W plant reviewed. Appendix X provides specific AFW system descriptions, a simplified flow sheet for each CE operating plant, and an evaluation with corresponding recommendations.

3. DETERMINISTIC EVALUATION

3.1 Background and Objectives

In our review of current applications for construction permits and operating licenses for pressurized water reactors, we evaluate the AFW system to assure that the design conforms to the applicable General Design Criteria (GDC) in Appendix A to 10 CFR Part 50. The General Design Criteria identified in Section 10.4.9 of the Standard Review Plan applicable to the AFW system design are listed below.

(1) GDC 2, "Design Bases for Protection Against Natural Phenomena," as related to structures housing the system, and the system itself being capable of withstanding the effects of natural phenomena such as earthquakes, tornadoes, hurricanes, and floods.

(2) GDC 4, "Environmental and Missile Design Bases," with respect to structures housing the system and the system itself being capable of withstanding the effects of external missiles and internally generated missiles, pipe whip, and jet impingement forces associated with pipe breaks.

(3) GDC 5, "Sharing of Structures, Systems, and Components," as related to the capability of shared systems and components important to safety to perform required safety functions.

Table III-1 Auxiliary feedwater systems (CE plants)

Plant	No. of Pumps/ Type of Drive	Capacity	AFWS Mode of Initiation
Arkansas Nuclear One, Unit 2	1 Steam-Driven 1 Motor-Driven	Steam: 575 gpm @ 2800 ft Motor: 575 gpm @ 2800 ft	Automatic
Calvert Cliffs 1 & 2	2 Steam-Driven per unit	700 gpm @ 1100 psia each	Manual
Ft. Calhoun 1	1 Steam-Driven 1 Motor-Driven	Steam: 260 gpm @ 2400 ft Motor: 260 gpm @ 2400 ft	Semiautomatic motor-driven pump manually connected to diesel generator
Maine Yankee	1 Steam-Driven 2 Motor-Driven	Steam: 500 gpm @ 1100 psig Motor: (each) 1500 gpm @ 1100 psig	Manual
Millstone 2	1 Steam-Driven 2 Motor-Driven	Steam: 600 gpm @ 2437 ft Motor: (each) 300 gpm @ 2437 ft	Manual
Palisades	1 Steam-Driven 1 Motor-Driven	Steam: 415 gpm @ 2730 ft Motor: 415 gpm & 2730 ft	Manual
St. Lucie 1	1 Steam-Driven 2 Motor-Driven	Steam: 500 gpm @ 1200 psi Motor: (each) 250 gpm @ 1200 psi	Manual

Table III-2 Auxiliary feedwater systems (W plants)

Plant	No. of Pumps/ Type of Drive	Capacity		AFWS Mode of Initiation	Comments
Beaver Valley 1	1 Steam-Driven	Steam:	700 gpm @ 2696 ft	Automatic	
	2 Motor-Driven	Motor: (each)	350 gpm @ 2696 ft		
D. C. Cook 1 & 2	1 Steam-Driven*	Steam:	900 gpm @ 2714 ft	Automatic	Per unit, motor pumps supply both units
	1 Motor-Driven*	Motor:	450 gpm @ 2714 ft		
Farley 1	1 Steam-Driven	Steam:	700 gpm @ 1268 psig	Automatic	
	2 Motor-Driven	Motor: (each)	350 gpm @ 1268 psig		
Ginna	1 Steam-Driven	Steam:	400 gpm @ 1131 psig	Automatic	
	2 Motor-Driven (normal AFWS)	Motor: (each)	200 gpm @ 1114 psig		
	2 Motor-Driven (standby AFWS)	Motor:	200 gpm	Manual	
Haddam Neck	2 Steam-Driven	Steam:	450 gpm @ 1000 psia	Manual	
H. B. Robinson	1 Steam-Driven	Steam:	600 gpm @ 1300 psi	Automatic	
	2 Motor-Driven	Motor: (each)	300 gpm @ 1300 psi		
Indian Point 2 & 3	1 Steam-Driven*	Steam:	800 gpm @ 1350 psig	Automatic	Per unit
	2 Motor-Driven*	Motor: (each)	400 gpm @ 1350 psig		
Kewaunee	1 Steam-Driven	Steam:	240 gpm @ 2850 ft	Automatic	
	2 Motor-Driven	Motor: (each)	240 gpm @ 2850 ft		
North Anna 1	1 Steam-Driven	Steam:	700 gpm @ 2800 ft	Automatic	
	2 Motor-Driven	Motor: (each)	350 gpm @ 2800 ft		
Prairie Island 1 & 2	1 Steam-Driven*	Steam:	220 gpm @ 1200 psig	Automatic	Per unit, motor pump normally feeds opposite unit steam generators
	1 Motor-Driven*	Motor:	220 gpm @ 1200 psig		
Point Beach 1 & 2	1 Steam-Driven*	Steam:	400 gpm @ 1192 psig	Automatic	Per unit, motor pump supplies both units
	1 Motor-Driven*	Motor: (each)	200 gpm @ 1192 psig		

*Note: See Comments column.

Table III-2 (Continued)

Plant	No. of Pumps/ Type of Drive	Capacity		AFWS Mode of Initiation	Comments
Salem 1	1 Steam-Driven	Steam:	880 gpm @ 1550 psi	Automatic	
	2 Motor-Driven	Motor: (each)	440 gpm @ 1300 psi		
San Onofre 1	1 Steam-Driven	Steam:	300 gpm @ 1110 psi	Manual	
	1 Motor-Driven	Motor:	235 gpm @ 1035 psi		
Surry 1 & 2	1 Steam-Driven*	Steam:	700 gpm @ 2730 ft	Automatic	One pump each AFW system can feed opposite unit
	2 Motor-Driven*	Motor: (each)	350 gpm @ 2730 ft		
Trojan	1 Steam-Driven	Steam:	960 gpm @ 3400 ft	Automatic	
	1 Diesel-Driven	Diesel:	960 gpm @ 3400 ft		
Turkey Pt. 3 & 4	3 Steam-Driven* for both units	(each)	600 gpm @ 2775 ft	Automatic	One pump normally supplies each unit - third pump is backup for either unit
Yankee Rowe	1 Steam-Driven*	Steam:	90 gpm @ 1200 psi	Manual	Charging and safety injection systems serve as backup
Zion 1 & 2	1 Steam-Driven*	Steam:	900 gpm @ 3099 ft	Automatic	Per unit
	2 Motor-Driven*	Motor: (each)	450 gpm @ 3099 ft		

(4) GDC 19, "Control Room," as related to the design capability of system instrumentation and controls for prompt hot shutdown of the reactor, and potential capability for subsequent cold shutdown.

(5) GDC 44, "Cooling Water," to assure the capability to transfer heat loads from the reactor system to a heat sink under all operating conditions; redundancy of components so that the safety function can be performed assuming a single active component failure; and the capability to isolate components or piping if required so that the system safety function will be maintained.

(6) GDC 45, "Inspection of Cooling Water Systems," as related to design provisions made to permit periodic inservice inspection of system components and equipment.

(7) GDC 46, "Testing of Cooling Water System," as related to design provisions made to permit appropriate functional testing of the system and components to assure operability and performance of components, and capability of the integrated system to function as intended during all operating conditions.

In determining whether the AFW system designs for such applications meet these General Design Criteria, the staff uses Section 10.4.9 of the Standard Review Plan and Branch Technical Position ASB 10-1 (hereafter referred to as ASB 10-1) as guidance. These documents contain the acceptance criteria for the AFW system and the review procedures to be used by the staff to determine if these acceptance criteria are met. If the staff concludes that the acceptance criteria are met, then it is also able to conclude that the requirements of the applicable General Design Criteria are satisfied.

It was recognized at the outset of this assessment of operating plants that many of these plants do not meet each of the acceptance criteria of the Standard Review Plan, including Section 10.4.9 and ASB 10-1, which relate to the AFW system design. This situation exists because the operating licenses for many of these plants were issued prior to the publication of the Standard Review Plan and, for some of these plants, prior to the publication of the General Design Criteria in February 1971.* The Standard Review Plan was originally issued in November 1975 and revised in 1978.

When the staff issues new or revised regulatory requirements and guidance, it addresses whether the new or revised requirements or guidance should be backfitted to operating plants, as well as plants undergoing licensing review. This decision is guided by Section 50.109 of 10 CFR Part 50 of the Commission's regulations. This regulation states that, if a finding is made to the effect that new requirements provide substantial, additional protection which is required for public health and safety, they are to be backfitted on plants with operating licenses (operating plants). Such a finding has not been made for several requirements contained in SRP Section 10.4.9, which applies to AFW systems. Consequently, as noted above, the AFW systems at some operating plants do not meet all of the requirements imposed on later designs.

*Although the GDC were issued as part of 10 CFR 50 in 1971, the basic safety considerations embodied herein had been in general use from the early 1960s.

It should be noted that AFW system designs which do not meet the criteria in the Standard Review Plan are not necessarily in conflict with the General Design Criteria. Deviations from the Standard Review Plan may be justified (even on new plants) provided that an acceptable level of protection is provided in the overall plant design. Prior to our assessment, specific documentation of deviations from the Standard Review Plan, Section 10.4.9, and ASB 10-1 had not been required for all operating plants.

It is against this background that we developed guidelines for the deterministic review of AFW system designs for operating plants. These guidelines are provided below.

(1) Determine the extent to which the AFW system designs meet the criteria of the current Standard Review Plan.

(2) Where AFW system designs do not meet the Standard Review Plan criteria, determine whether changes can be identified that will significantly upgrade the auxiliary feedwater system in operating plants to make them less susceptible to single point failures, human errors, and common mode failures.

(3) Recommend areas of the AFW system design to be evaluated for longer-term improvements in the reliability of AFW system designs.

4. RELIABILITY EVALUATION

4.1 Background and Objectives

The General Design Criteria (GDC) contained in Appendix A to 10 CFR Part 50 provide minimum requirements to be satisfied in the design of nuclear power plants. As such, the GDC provide the basis for the staff's deterministic review of the design features of nuclear power plants, including those of the auxiliary feedwater (AFW) systems. Toward this end, the Standard Review Plan provides criteria and supplemental guidance to the staff for assuring conformance with the GDC, including those applicable to AFW systems. However, to provide additional insight regarding the potential for failures of the AFW system not covered by the Standard Review Plan, the reliability assessments discussed below were performed.

The TMI-2 accident demonstrated that human errors of commission or omission can lead to failures of redundant and diverse AFW system equipment to perform as designed. Thus, the TMI-2 experience tends to confirm past studies[2] indicating human errors are dominant factors[3] in reactor accidents.

Currently, a variety of AFW system designs are being used in the 33 operating plants using W and CE-designed reactors. This factor gives rise to a variety of hardware dependencies and possible vulnerabilities brought about by human interaction with the design, or possibly some other common influences that could affect AFW system operation. Past studies[2, 3] have provided useful engineering insights into those areas of system design where human interactions could significantly affect the availability of standby safety systems. These past studies have also provided

additional insights for the more probable transient events that tend to dominate the demand for successful operation of the AFW systems.

The reliability assessment approach used and the principal insights and results are summarized below. The comparative reliabilities of the AFW system of the 33 W and CE-designed operating reactors were evaluated for three different initiation events and are shown in Figure III-4. Figure III-5 presents the comparative reliabilities of the AFW system for each of the 8 CE-designed operating reactors. The results shown in Figures III-4 and III-5 indicate that the reliabilities of the existing AFW system design vary by at least an order of magnitude. The dominant contributors to this variability in reliability were, in general, human errors and single point vulnerabilities as described later. Plant-specific details on these AFW system designs are provided in Appendix X.

4.2 Reliability Assessment Approach and Scope

Reliability techniques and insights were used in this assessment to supplement the more traditional deterministic type of safety review. The principal techniques used in this assessment included the event-tree and fault-tree logic techniques. These techniques are considered[4, 5] to represent an acceptable approach in establishing the priorities for the resolution of generic safety issues. These techniques, and the insights derived by use of such logic, have been employed recently to perform a risk-based categorizing and screening of the various generic safety issues[6].

Accordingly, the staff used the aforementioned techniques to focus on those potential failures that could dominate the unreliability of AFW systems during the following transients.

4.2.1 Loss of Main Feedwater

This transient involves the interruption of the main feedwater flow and the subsequent tripping of the reactor. Reactor experience suggests that about three interruptions of the main feedwater system may be experienced from a number of causes each reactor year.*

4.2.2 Loss of Main Feedwater Due to Loss of Offsite Power

This transient is initiated by the loss of offsite power which, in turn, causes the interruption of the main feedwater system and the tripping of the reactor. Reactor experience suggests that the main feedwater system may be interrupted by this transient approximately 0.2 to 0.3 times per reactor year.

*This number may appear to conflict with the information presented in Table II-4 in Appendix II. As was noted in Section II.6 of that appendix, the events listed in Table II-4 represent a minimum frequency of loss of feedwater events since other initiating events which resulted in a loss of feedwater may not have been included.

4.2.3 Loss of Main Feedwater and Loss of All Alternating Current Power (Station ac Blackout)

This event is initiated by the loss of offsite power as is the previous transient in 4.2.2 above, except that the onsite emergency alternating current (ac) power sources are also lost. Thus, this scenario represents a significantly degraded case compared to 4.2.2 above; however, since this event requires the concurrent loss of all onsite ac power sources (e.g., usually two diesel-engine generators), its likelihood of occurrence should be orders of magnitude less than that of 4.2.2 above. This low probability of occurrence notwithstanding, reactor experiences have revealed some precursors to this scenario. For example, in a few instances all ac power has been lost for periods less than five minutes, thereby encroaching on the time to boil the steam generators dry. In another instance, only one of the redundant onsite emergency ac power sources was available for a period of about 50 minutes; thus, if for some reason the operating ac source were to fail during this 50-minute interval, this scenario could have been in effect.

The ability to cope with this event was not a licensing requirement for the earlier licensed plants. The more recently licensed plants, however, as well as those currently undergoing construction permit or operating license reviews have been required to provide AFW system designs capable of functioning upon the loss of all ac power. Additionally, the decision as to whether or not this transient should be a plant design basis, and for what period of time this condition would be assumed to exist, is being reviewed as an unresolved safety issue under Generic Task Action Plan A-44).[7] Because of the above considerations, the ability of each operating plant's AFW system to cope with this transient was included in this assessment.

4.3 Generic Event Trees

The inductive logic used in evaluating the relative reliabilities of the various AFW systems involved the use of generic event trees. The dominant failures affecting the availability of the various AFW system designs for each of the three transients were assessed on a conditional basis rather than on an overall probability basis, i.e., the reliability of each AFW system was calculated, given that the applicable transients described above existed. Figure III-1 illustrates an event tree applicable to many of the current AFW system designs. Although this event tree does not contain all the various systems that may become involved over the course of the transient, it illustrates possible accident sequences and outcomes that could result. The heavily shaded sequence illustrates one of the loss of main feedwater transients described above that demands successful operation of the AFW system. The time interval of interest for all the transient events considered is the unavailability of AFW systems during the period of time to boil the steam generators dry. Beyond this interval, primary coolant would be discharged via pressurizer relief and/or safety valves and thereby be lost from the primary coolant system. Without the satisfactory operation of primary coolant makeup systems (e.g., high pressure injection systems), the reactor core could be uncovered and eventually damaged. Further, as this boil-dry time is approached, the ability to drive the steam turbine-driven AFW pumps could be lost. If the AFW system design

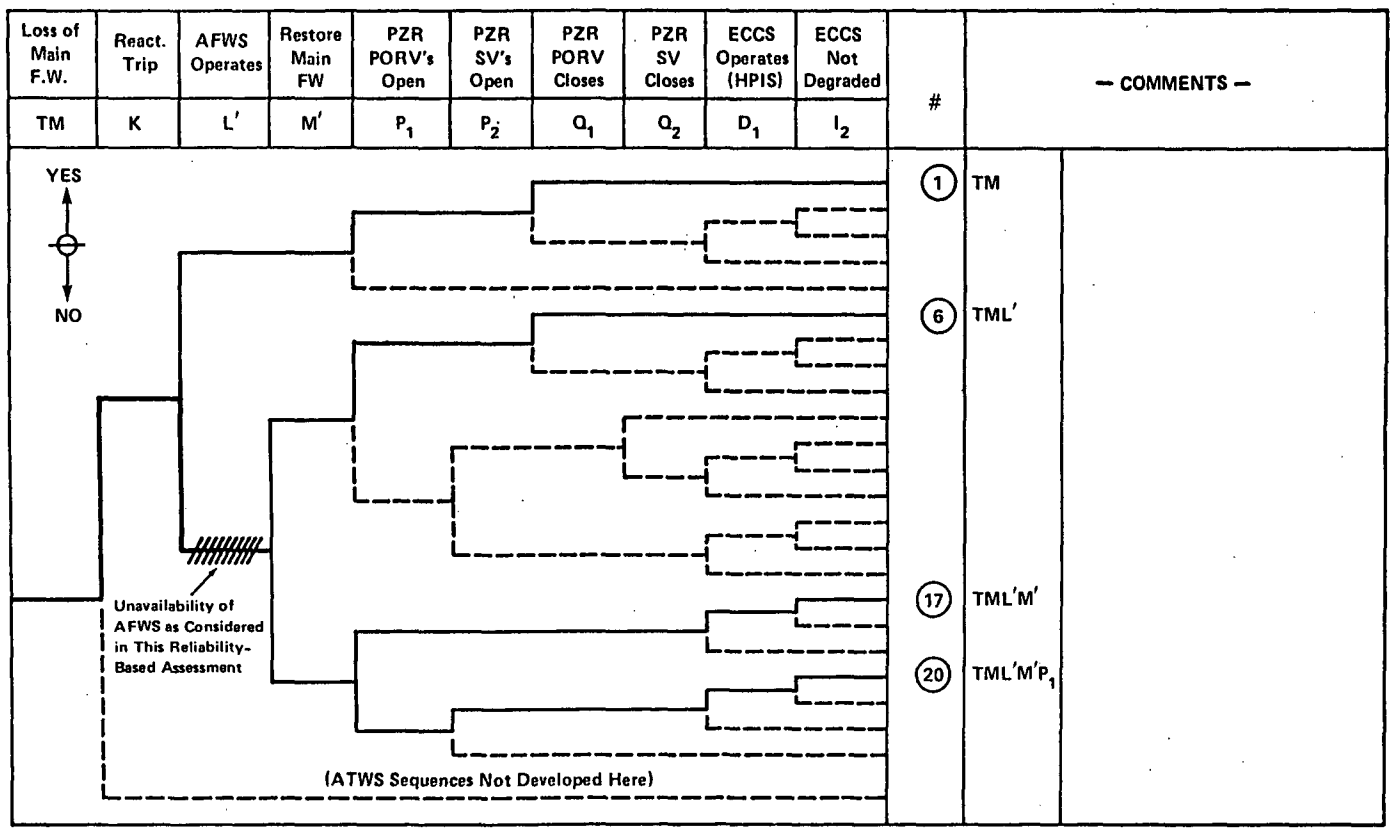

Figure III-1 Example Event Tree: Transient Involving Loss of Main Feedwater — Offsite AC Power Available. (Case of LMFW)

contains only steam turbine-driven pumps, or if the transient is such that only this AFW subsystem is available, and if the boil-dry time is approached, then the likelihood of initiating AFW system operation would be reduced significantly.

4.4 Fault Tree Logic Approach

The deductive logic used in evaluating the relative reliabilities of the various AFW systems was based on the Boolean logic associated with fault trees. A simplified or reduced fault-tree approach was used to estimate the unavailability of AFW systems to a demand. In this assessment, unavailability is taken as being synonymous with the unreliability. This approach relied on the engineering insights available through applications of the system fault trees in the Reactor Safety Study (WASH-1400),[2] and on subsequent work undertaken on additional light water reactor designs. This latter work was based on a system survey and analysis technique[8] where reduced and simplified fault tree logic was used to estimate the dominant system failures and overall system unavailability.

Figures III-2 and III-3 illustrate the simplified fault tree logic for an AFW system design. Each fault tree identifies the principal failures expected to have the most influence on the unavailability of the AFW system for the specific transient event identified in the figure. To assist in characterizing the reliability of the various AFW system designs and to help in identifying the more likely failures that could affect the various designs, quantitative estimates were made from the fault tree logic structure. Towards this end, a specific data base was compiled and used to generate best estimate failure probabilities and human error potentials considered to be applicable to those components and human interactions across the range of the AFW system designs.* A principal reason for compiling this best estimate type of data base was to assure that the quantitative estimates of reliability derived from the fault trees could be used to compare the relative reliabilities of the various AFW system designs. This was possible because the data were consistently used across the range of the AFW system designs by all of the reliability engineers who were involved in the fault analyses. The data base and its use in a fault tree logic structure are described briefly below.

4.5 Data Base and Application

Table III-3 presents data compiled specifically for conducting this AFW system generic assessment. The component failure and human errors probabilities in Table III-3 represent current best estimates. The component failure rates were derived from several sources, including the Reactor Safety Study (WASH-1400)[2] and ongoing NRC data assessment programs. The various human error probabilities were derived from both the Reactor Safety Study and from discussions with recognized experts in the field of human behavior and reliability at Sandia Laboratories. The Sandia experts are presently working with NRC's Office of Nuclear Regulatory Research on human factors related programs.

*Evaluating the variability in AFWS designs was the principal aim in this assessment rather than evaluating variability in data to be applied to a specific design.

Figure III-2 Simplified Fault Tree Logic Structure – LOFW Transient.

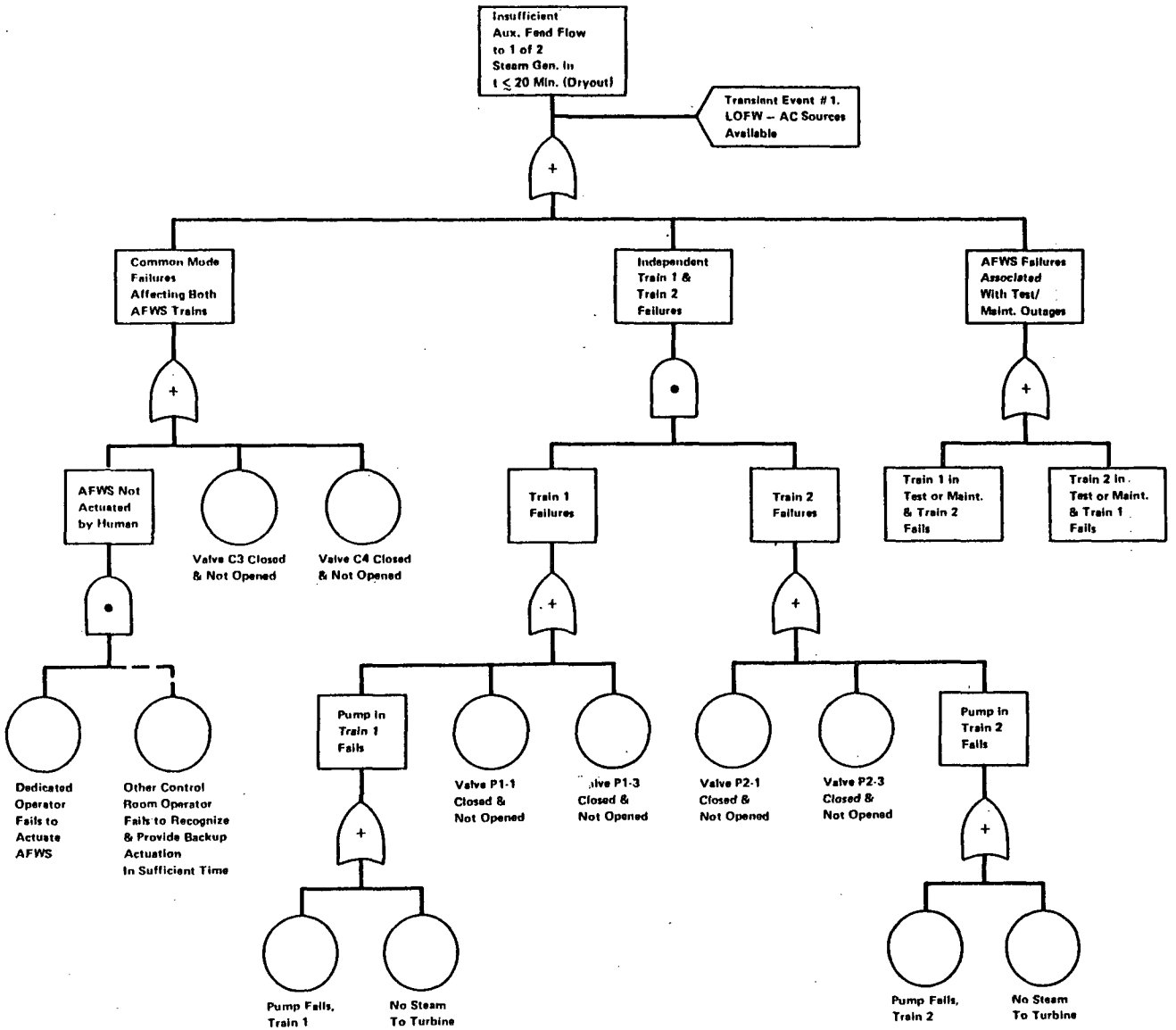

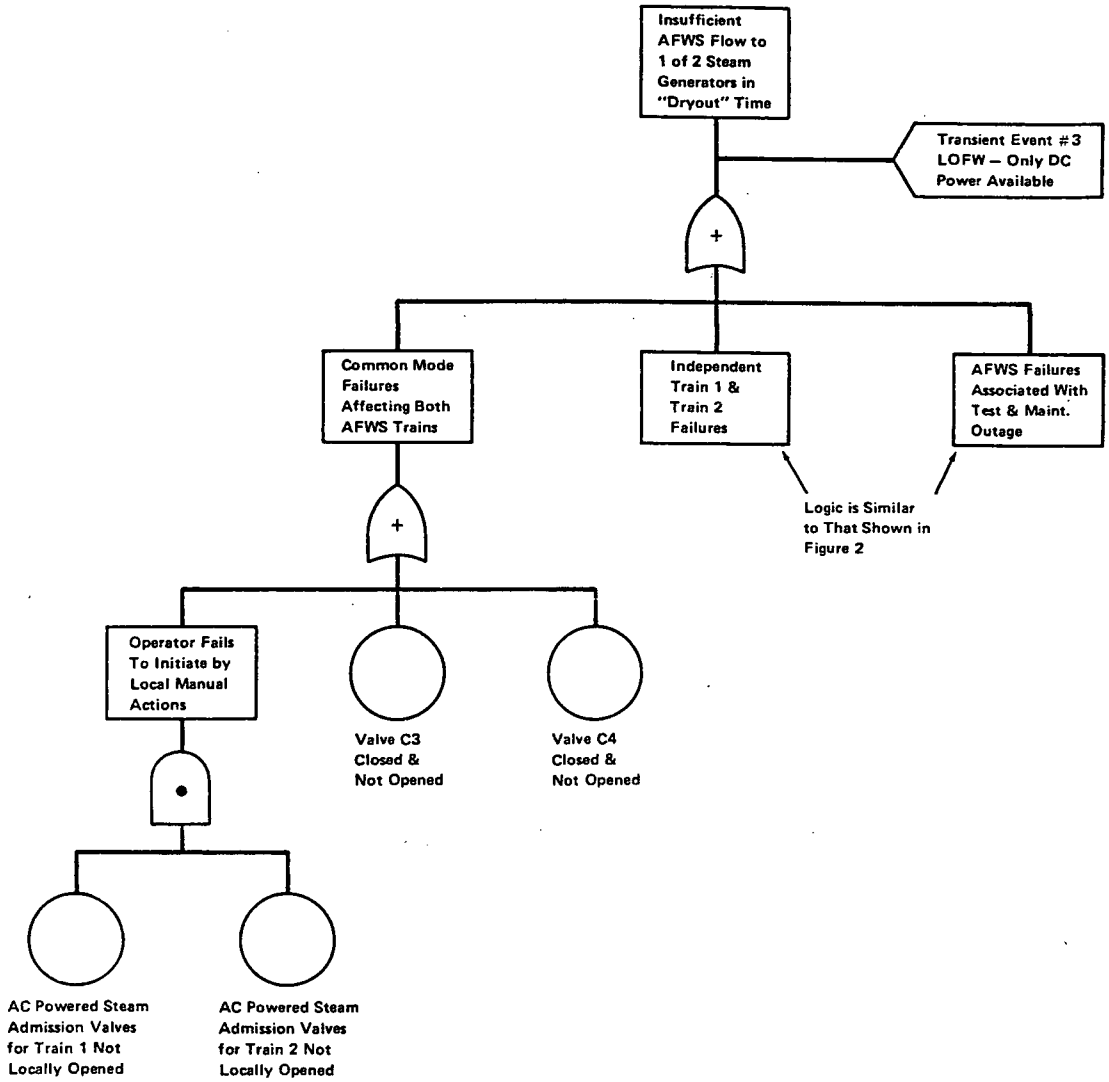

Figure III-3 Simplified Fault Logic Structure – LOFW Transient, Only DC Power Available.

Table III-3 Basic Data Used For Purposes Of Conducting A Comparative Assessment Of Existing AFW System Designs And Their Potential Reliabilities

	Point Value Estimate of Probability of* Failure on Demand
I. Component (Hardware) Failure Data	
a. Valves:	
Manual Valves (plugged)	$\sim 1 \times 10^{-4}$
Check Valves	$\sim 1 \times 10^{-4}$
Motor Operated Valves	
. Mechanical Components	$\sim 1 \times 10^{-3}$
. Plugging Contribution	$\sim 1 \times 10^{-4}$
. Control Circuit (Local to Valve)	
w/Quarterly tests	$\sim 6 \times 10^{-3}$
w/Monthly tests	$\sim 2 \times 10^{-3}$
Piston Actuated Valves	
. MOV-Mechanical Components	$\sim 3 \times 10^{-4}$
. SOV-Mechanical Components	$\sim 1 \times 10^{-3}$
. Control Circuit (Note: Use MOV Failure Rate if Valve is not Fail Safe)	≈ 0.0
b. Pumps: (1 Pump)	
. Mechanical Components	$\sim 1 \times 10^{-3}$
. Control Circuit (Local to Pump - Applies to Electrical Pumps)	
w/Quarterly tests	$\sim 7 \times 10^{-3}$
w/Monthly tests	$\sim 4 \times 10^{-3}$
c. Actuation Logic (Assumes at least 1 of 2 logic)	$\sim 7 \times 10^{-3}$/train
II. Test and Maintenance Outage Contributions:	
a. Calculational Approach	
1. Test Outage	
$Q_{TEST} \approx \frac{(\#hrs/test)\ (\#tests/year)}{\#hrs/year}$	
2. Maintenance Outage	
$Q_{MAINT.} \approx \frac{0.22\ (\#hrs/maint.\ act)}{720}$	
b. Data Tables for Test & Maintenance Outages*	

*Error factors of 3-10 (up and down) about such values are not unexpected for basic data uncertainties.

Table III-3 (Continued)

*SUMMARY OF TEST DURATION

Component	Range on Test Duration Time, Hr	Calculated Mean Test Duration Time, t_D, Hr
Pumps	0.25 - 4	1.4
Valves	0.25 - 2	0.86
Diesels	0.25 - 4	1.4
Instrumentation	0.25 - 4	1.4

*LOG-NORMAL MODELED MAINTENANCE DURATION

Component	Range On Duration Time, Hr	Mean Duration Time, Hr
Pumps	1/2 - 24 1/2 - 72	7 19
Valves	1/2 - 24	7
Diesels	2 - 72	21
Instrumentation	1/4 - 24	6

*Note: These data tables were taken from the Reactor Safety Study (WASH-1400) for purposes of this AFW system assessment. Where the plant technical specifications placed limits on the outage duration(s) allowed for AFW system trains, this technical specification limit was used to estimate the mean duration times for maintenance. In general, it was found that the outages allowed for maintenance dominated those contributions to AFW system unavailability from outages due to testing.

Table III-3 (Continued)

	Approximate Time Needed to Actuate	Estimated Failure Prob. for Primary Operator to Actuate AFWS	Estimated Failure Prob. of Other (Backup) Control Rm. Operator to Actuate AFWS	Overall Estimate of Failure Probability	Estimated Error Factor on Overall Probability
b. Acts and Errors of a Post-Accident Nature					
Manual Actuation of AFW System from Control Room					
(a) Considering "Dedicated" Operator to Actuate AFW System and Possible Backup Actuation of AFWS	5 min.	2×10^{-3}	-	2×10^{-3}	10
	15 min.	1×10^{-3}	0.5 (mod. dep.)	5×10^{-4}	10
	30 min.	5×10^{-4}	0.25 (low dep.)	10^{-4}	10
(b) Considering "Non-Dedicated" Operator to Actuate AFW System and Possible Backup Actuation of AFW System	5 min.	5×10^{-2}	-	5×10^{-2}	10
	15 min.	1×10^{-2}	0.5 (mod. dep.)	5×10^{-3}	10
	30 min.	5×10^{-3}	0.25 (low dep.)	10^{-3}	10

The best estimate data in Table III-3 are subject to considerable uncertainty, and may have error spreads of an order of magnitude on either side of the data. Hence, although the data base may be used to obtain relative reliabilities, care must be taken in ascribing a high degree of numerical precision to these values[5] or to results derived from their use. Because of this, any relative values for AFW system reliability presented herein should not be interpreted to have a high degree of precision. The data from Table III-3 were applied* to the fault logic structure in order to obtain relative comparisons of reliability of the various AFW system designs. It was found that the various AFW system designs did exhibit considerable variability with regard to design approach and in their human influences. For example, some AFW systems include three feedwater pumps (two electric motor-driven and one steam turbine-driven), are automated, and no single point vulnerability was identified in our review. In contrast, some AFW systems have two pumps and are not automated, thereby having a strong dependence on human influences for their performance. In addition, some of these designs also have single point vulnerabilities that could potentially negate the two train AFW system redundancy (e.g., a single manual valve). Clearly, one might reasonably expect to find a significant variance in reliability between such designs without having available an abundance of data of great precision.

4.6 Summary of Reliability-Based Results (Generic)

Figure III-4 illustrates the results of the generic AFW system reliability assessment. As can be seen from Figure III-4, preliminary assessments of the reliabilities of the AFW system designs range from high to low. On a more quantitative basis, this range depicts differences in reliability of the existing AFW systems of more than an order or magnitude for each of the three transients considered in this assessment. Each column in Figure III-4 depicts the relative reliability of the various system designs for a particular transient.

Plant-specific and generic recommendations to improve on and strengthen AFW system reliability were developed as part of this overall study and are presented in Section 5 of this appendix. These recommendations reflect the engineering insights derived from this reliability evaluation as well as those derived from the deterministic evaluation. The recommendations derived from the reliability evaluation generally tend to reduce human error potentials and other dominant failures and are proposed for all AFW system designs, as applicable, for all of the AFW system designs regardless of whether these designs are characterized as having a relatively high or low reliability. The three transients used in the assessment are described in detail below.

*The data was applied to the various identified faults in the fault logic structure and a point value estimate was determined for the top fault event (i.e., AFW system unavailability). Such an approach is considered adequate to gain those engineering and reliability based insights sought for this AFW system reassessment. As noted, no attempt was made to introduce the somewhat time consuming calculational elegance associated with the process of error propagation into this assessment (e.g., Monte Carlo). Prior experiences with such a calculational process have revealed a somewhat predictable outcome that, even with the very redundant systems, could be slightly higher than the point value solution (e.g., factor of approximately three times higher than the point value, and usually less). Should there exist a clearly overwhelming fault in a system's design, then the process of error propagation would be expected to be merely one of higher elegance and it would yield no important change to the quantitative solution.

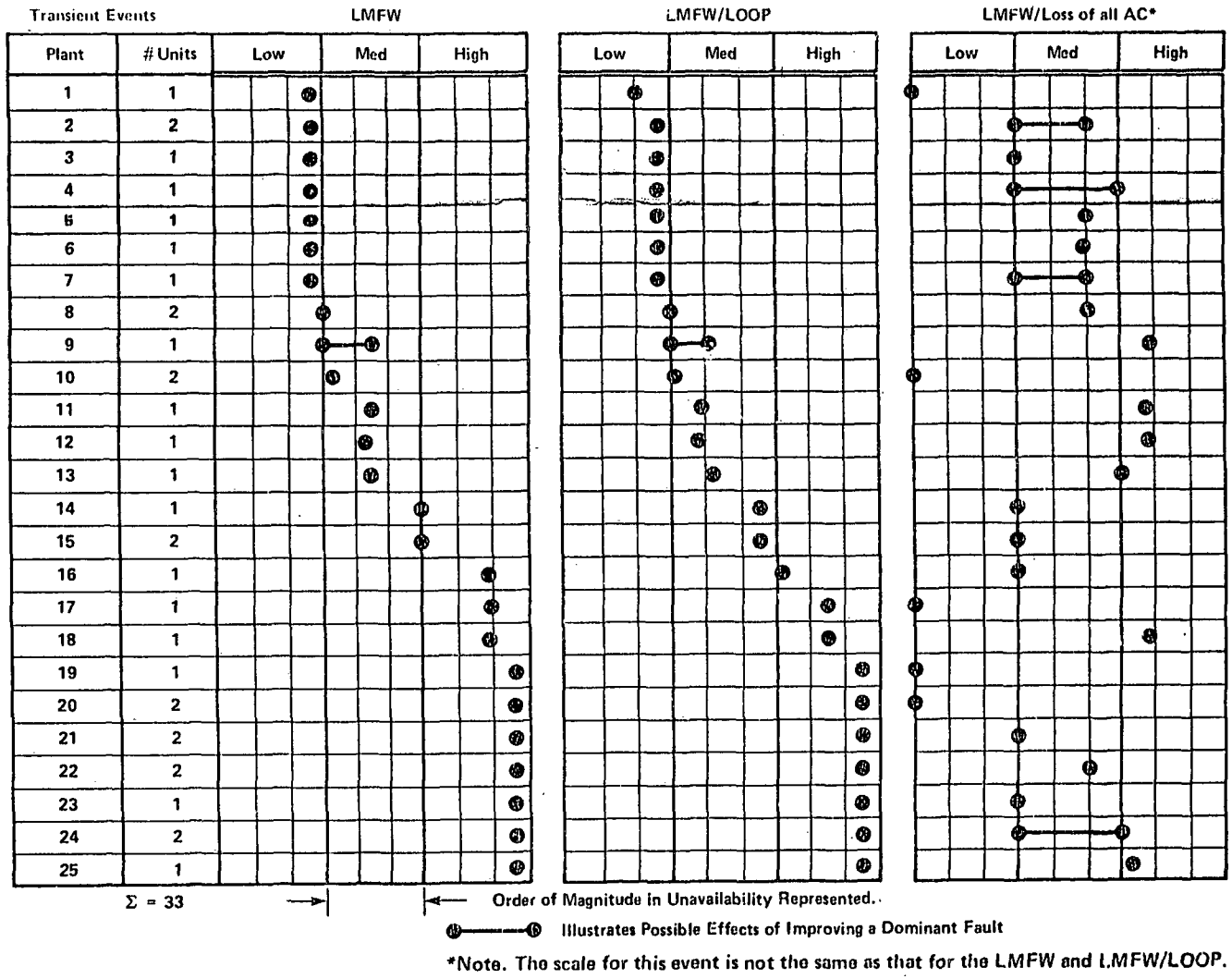

*Note. The scale for this event is not the same as that for the LMFW and LMFW/LOOP.

Figure III-4 A Generic Perspective: Comparisons of AFWS Reliability.

4.6.1 Loss of Main Feedwater (First Column, Figure III-4)

Approximately eight units were identified as having AFW systems with relatively low reliability for this transient. These AFW system designs generally require manual actuation and include two pumps in their design. Some were found to have single point vulnerabilities such as a single manual valve through which all AFW flow passes (typically a maintenance valve), where human error possibility was generally found to be the dominant common mode failure contributor. In some cases, deficiencies in Technical Specifications are the principal contributor to unavailability, e.g., limits were not imposed on the allowed outage interval for an AFW system train. Where such a deficiency was identified, the reliability of the AFW system could be adversely affected if one of the trains was to be allowed to be inoperable for an extended period of time. In general, for the eight units characterized as having a relatively low AFW system reliability for this transient, the dominant failure is the failure to manually initiate the AFW system. Plants requiring manual AFW system initiation are presently required, by recent IE Bulletins[9,10] to provide a dedicated individual to manually actuate the AFW system upon loss of main feedwater. The results presented in Figure III-4 consider only the reliability of this dedicated individual to actuate the AFW system. It is likely that, in the event that this dedicated individual fails to perform the AFW system actuation, backup would be provided by licensed reactor operators in the control room. Discussions with experts on human reliability indicate that the chance of failing to actuate the AFW system from the control room might be reduced by a factor of two to four by the backup operator, depending on the time window available (see data tables). If this potential for improved human reliability were to be factored into the Figure III-4 results, then other potential failures, such as the single valve vulnerabilities, could become the dominant contributors to the unavailability of AFW systems. Therefore, the net benefit in AFW system unavailability might be limited to the aforementioned factor of two, unless the next level of dominant failure modes were to be improved upon. The degree to which such successive improvements might further improve AFW system reliability was beyond the present work scope. However, recommendations are made in Section 5 of this appendix that should improve these next levels of dominating faults, such as the single manual valve.

Those AFW system designs that could be characterized as being of medium reliability generally were automatically actuated with manual backup. However, single point vulnerabilities were identified which would limit the reliability. Other factors, such as the lack of specific limitations on allowed AFW train outage time and limitations on AFW flow rate to the steam generators because of water-hammer concerns, could have an adverse effect on the AFW system redundancy and thus limit the achievable reliability. Improvements in these areas would serve to further improve reliability of these AFW system designs.

Approximately 16 units were characterized as having high AFW system reliability. These AFW system designs were generally of high redundancy and had no observable single point vulnerabilities. Consequently, the reliability of these designs would be expected to be limited by human interactions that could adversely affect the installed hardware redundancy. For example, some periodic tests of AFW systems are conducted in ways that

could invalidate AFW system redundancy. Usually, such tests are not staggered (i.e., each redundant component of the AFW system is tested by the same personnel and on the same shift) such that if identical human errors were to be made on redundant components the entire AFW system could be made ineffective. The net result is that the effect of these human errors could persist until the next test interval, at which time the errors should be detected. To reduce such potential vulnerabilities, recommendations were made for strengthened administrative controls (e.g., improved valve locking procedures) and considerations are being given for staggering tests of the individual AFW system trains, such that only one train would be tested on any given shift. Additional insights derived from this evaluation suggest that the quality of periodic testing, as well as of the AFW system design, should be improved. For example, testing programs that incapacitate more than one train of the AFW system should be revised so that the periodic tests demonstrate availability of flow path to the steam generators rather than negate the flow path.

4.6.2 Loss of Main Feedwater and Loss of Offsite Power (Second Column, Figure III-4)

The reliabilities of the various AFW system designs for this transient were generally found to be quite similar to those for the previous transient, i.e., loss of main feedwater. Onsite ac power sources were considered and the potential impact of degrading these power sources (e.g., the loss of one of the two emergency diesel-generators) on the AFW system reliability was estimated. Depending on the AFW system design and on the ac power dependencies identified, variable impacts were estimated. However, these variations generally were not dominant failure modes, and were similar to those previously described for the loss of main feedwater transient.

4.6.3 Loss of Main Feedwater and Loss of All Alternating Current Power (Station ac Blackout) (Third Column, Figure III-4)

This assessment carried postulated degradation of the ac power sources one step further than the loss of main feedwater and the loss of offsite power. All ac power sources were assumed unavailable and the ac dependencies of the AFW system were explored. In general, the steam turbine-driven pump of the AFW system was the only potentially operable system for this scenario. Some of the AFW system designs have only steam turbine-driven pumps; therefore, these designs potentially have greater available redundancy for this scenario. The relative reliability of the various AFW system designs varied by more than an order of magnitude for this transient. Seven reactor units were characterized as having relatively low reliabilities for this transient. These particular AFW system designs did not repeat their prior characterizations in Columns 1 and 2 of Figure III-4. This difference is due to the strong ac dependencies which exist in the steam turbine-driven train of their AFW system. All seven units depend on ac power to provide lube oil cooling for the steam turbine-driven pump. Without this lube oil cooling, it was assumed that the pump would overheat and eventually fail due to shaft/seal/bearing failures. Estimates on when pump failure might occur vary, but it was assumed to occur in a relatively short time interval. As a consequence, those AFW systems having this ac power dependency were judged to have a low reliability for this event. However, it should be noted that preliminary results

from a subsequent test at an operating plant indicated that the effect of losing lube oil cooling may not be as rapid as assumed in this evaluation. Most of the turbine-driven pumps of the AFW systems use AFW flow to cool the lube oil.

Several AFW system designs have valves that depend on ac power for operation. In contrast to those AFW systems having lube-oil ac power dependencies described above, these AFW systems can be successfully operated by manually opening the valves. Generally, these AFW system designs are characterized in Figure III-4 as having a low to medium reliability. The nature of the valves' dependencies on ac power varied between the designs. For example, certain designs were found to have ac operated steam admission valves designed to fail closed on loss of air supply to the valves. Since, on loss of ac power, the air supply to these valves could be depleted in about one-half hour, the operator would be required to take additional manual actions to reopen and maintain the admission valves open until ac power and/or an air supply could be restored. Some plants have AFW system designs characterized as having low to medium reliabilities. Such plants generally include valves that are dependent on ac power; however, the access conditions are such that they reduce the likelihood of successful local manual actions being taken. Some designs were also characterized in this low to medium reliability range because no specific limitations existed on the allowed train outage times, a factor that represents an important contributor to the AFW system unavailability.

Those AFW system designs that were characterized as having a relatively high reliability for this transient generally had no identifiable ac power dependencies and were automatically actuated. For these designs, the dominant fault contributors were those associated with hardware failures which could not be rectified in a timely way by manual actions.

4.7 Reliability Characterizations for AFW Systems in Plants Using Combustion Engineering Designed Reactors (Plant-Specific)

Figure III-5 characterizes the results of this reliability assessment of the AFW system designs in operating plants using CE designed reactors. The operating history of these plants represents a cumulative experience of more than 30 reactor-years. Although the majority of these AFW system designs are two-train systems, they depend on manual actuation for initiation and control of AFW flow. Two of the plants identified in Figure III-5 have automatic actuation features for the loss of main feedwater event; therefore, their reliability was assessed to be somewhat higher than the others. Most of these designs were also found to have single point vulnerabilities in that they include single manual valves in the suction side of the two-train AFW system design. In some instances, these single point vulnerabilities exist for both the alternate and primary sources of water to the AFW system pumps. The dominant fault contributors to AFW system unavailability are described in greater detail in Appendix X.

The significant variation in reliability of the various AFW system designs for the loss of main feedwater transient and the loss of all ac power is attributed to the

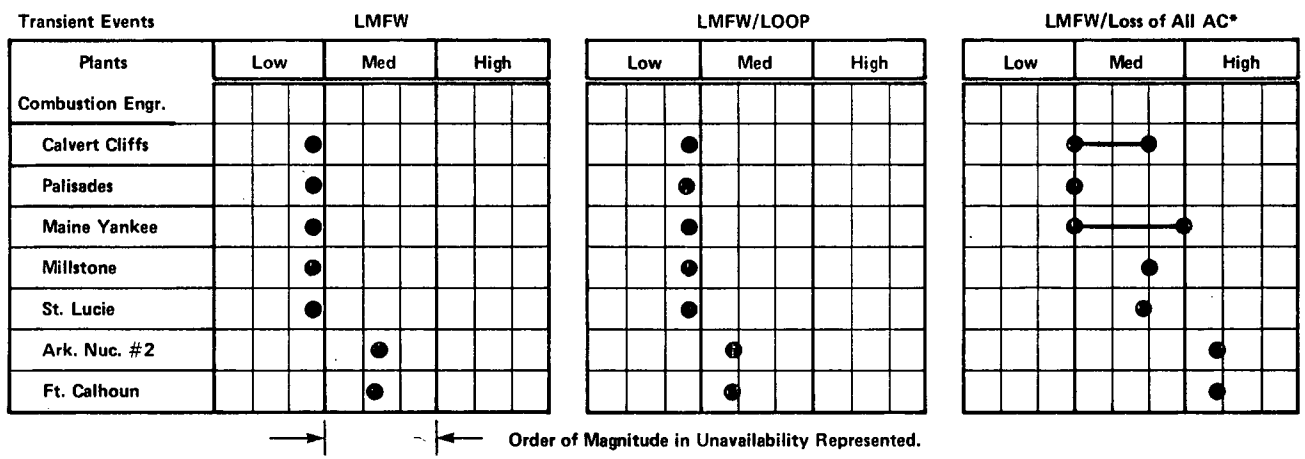

*The scale for this event is not the same as that for the LMFW and LMFW/LOOP.

Figure III-5 Reliability Characterizations for AFWS Designs in Plants Using the Combustion Engineering NSSS.

differences in design of the AFW systems. For example, plants having an ac power dependency (e.g., lube-oil cooling for the steam turbine-driven AFW pump) have the lowest AFW system reliability for this event. Accordingly, recommendations are made to eliminate ac power dependencies which could result in pump failure within a short time interval.

The reliability assessment approach and the principal insights and results are summarized below. The results shown in Figures III-4 and III-5 indicate that the reliabilities of the existing AFW system designs vary by at least an order of magnitude. The dominant contributors to this variability in reliability were, in general, human errors and single point vulnerabilities, as described later in this appendix.

5. SUMMARY OF RESULTS AND RECOMMENDATIONS

This section presents in summary form the results of the AFW system review and recommendations that should be implemented to improve the performance and reliability of the AFW systems of the various CE operating plants. Appendix X provides a separate AFW system description, evaluation, and recommendations for each individual plant.

5.1 Recommendation Categories

The recommendations are categorized as generic and plant-specific, as well as short-term and long-term. The generic recommendations (designations GS and GL refer to generic short- and long-term, respectively) are a result of similarities in AFW system potential problems between plants and are applicable to more than one plant. The generic recommendations and the concerns which led to these recommendations are described in this section. There are also plant-specific recommendations that are unique to a given plant AFW system. The plant-specific recommendations are addressed more fully in the individual plant evaluations in Appendix X.

The short-term recommendations represent actions to improve AFW system reliability that were to be implemented by January 1, 1980, or as soon thereafter as practicable. In general, they involve upgrading of Technical Specifications or establishing procedures to avoid or mitigate potential system or operator failures. The long-term recommendations involve system design evaluations and/or modifications to improve AFW system reliability and represent actions that were to be implemented by January 1, 1981, or as soon thereafter as practicable. This implementation schedule was intended to be consistent with the schedule for implementation of the requirements specified in NUREG-0578. If conflicts should arise, the schedule specified in NUREG-0578 takes precedence.

There are two significant limitations of the AFW system review and evaluation which should be noted, as well as their effect on the recommendations.

(1) While our review covered the classification and divisional redundancy of power sources for AFW system equipment and instrumentation and controls and the type of instrumentation and controls provided for the overall AFW system, we did not attempt to review detailed logic and control diagrams. This explains in part the conservative approach we used in applying to all plants the short- and long-term generic recommendations GS-7 and GL-5 which deal with nonredundant and non-Class 1E circuitry for AFW system automatic initiation systems.

(2) The review is not considered to be a complete evaluation of postulated high energy pipe breaks that could affect the AFW system, since piping isometric and plant arrangement drawings were not reviewed. However, where system flow sheets revealed potential pipe breaks that could cause total loss of AFW system capability, these problem areas have been identified and included in the long-term recommendations for further evaluation.

5.2 Short-Term Generic Recommendations

5.2.1 Technical Specification Time Limit on AFW System Train Outage

Concern - Several of the plants reviewed have Technical Specifications that permit one of the AFW system trains to be out of service for an indefinite time period. Indefinite outage of one train reduces the defense-in-depth provided by multiple AFW system trains.

Recommendation GS-1 - The licensee should propose modifications to the Technical Specifications to limit the time that one AFW system pump and its associated flow train and essential instrumentation can be inoperable. The outage time limit and subsequent action time should be as required in current Standard Technical Specifications; i.e., 72 hours and 12 hours, respectively.

5.2.2 Technical Specification Administrative Controls on Manual Valves - Lock and Verify Position

Concern - Several of the plants reviewed use a single manual valve or multiple valves in series in the common suction piping between the primary water source and the AFW system pump suction. At some plants the valves are locked open, while at others, they are not locked in position. If the valves are inadvertently left closed, the AFW system would be inoperable because the water supply to the pumps would be isolated. Since there is no remote valve position indication for these valves, the operator has no immediate means of determining valve position.

Further, the Technical Specifications for plants with locked-open manual valves do not require periodic inspection to verify that the valves are locked and in the correct position. For most plants where the valves are not locked open, valve position is verified on some periodic basis.

Recommendation GS-2 - The licensee should lock open single valves or multiple valves in series in the AFW system pump suction piping and lock open other single valves or multiple valves in series that could interrupt all AFW flow. Monthly inspections should be performed to verify that these valves are locked in the open position. These inspections should be proposed for incorporation into the surveillance requirements of the plant Technical Specifications. See Recommendation GL-2 for the longer-term resolution of this concern.

5.2.3 AFW System Flow Throttling-Water Hammer

Concern - Several of the plants reviewed apparently throttle down the AFW system initial flow to eliminate or reduce the potential for water hammer. In such cases, the overall reliability of the AFW system can be adversely affected.

Recommendation GS-3 - The licensee has stated that it throttles AFW system flow to avoid water hammer. The licensee should reexamine the practice of throttling AFW system flow to avoid water hammer.

The licensee should verify that the AFW system will supply on demand sufficient initial flow to the necessary steam generators to assure adequate decay heat removal following loss of main feedwater flow and a reactor trip from 100% power. In cases where this reevaluation results in an increase in initial AFW system flow, the licensee should provide sufficient information to demonstrate that the required initial AFW system flow will not result in plant damage due to water hammer.

5.2.4 Emergency Procedures for Initiating Backup Water Supplies

Concern - Most of the plants do not have written procedures for transferring to alternate sources of AFW supply if the primary supply is unavailable or exhausted. Without specific criteria and procedures for an operator to follow to transfer to alternate water sources, the primary supply could be exhausted and result in pump damage or a long interruption of AFW flow.

Recommendation GS-4 - Emergency procedures for transferring to alternate sources of AFW supply should be available to the plant operators. These procedures should include criteria to inform the operators when, and in what order, the transfer to alternate water sources should take place. The following cases should be covered by the procedures:

(1) The case in which the primary water supply is not initially available. The procedures for this case should include any operator actions required to protect the AFW system pumps against self-damage before water flow is initiated; and,

(2) The case in which the primary water supply is being depleted. The procedure for this case should provide for transfer to the alternate water sources prior to draining of the primary water supply.

5.2.5 Emergency Procedures for Initiating AFW Flow Following a Complete Loss of Alternating Current Power

Concern - Some operating plants depend on ac power for all sources of AFW system supply, including the turbine-driven pump train. In the event of loss of offsite and onsite ac power, ac-dependent lube oil supply or lube oil cooling for the pump will stop, and/or manual actions are required to initiate AFW flow from the turbine-driven pump by manually opening the turbine steam admission valve and/or AFW system flow control valves. There are no procedures available to the plant operators for AFW system initiation and control under these conditions. This could result in a considerable time delay for AFW system initiation, since the operators would not be guided by procedures dealing with this event.

Recommendation GS-5 - The as-built plant should be capable of providing the required AFW flow for at least two hours from one AFW pump train independent of any ac power source. If manual AFW system initiation or flow control is required following a complete loss of ac power, emergency procedures should be established for manually initiating and controlling the system under these conditions. Since the water for cooling of the lube oil for the turbine-driven pump bearings may be dependent on ac power, design or procedural changes shall be made to eliminate this dependency as soon as practicable. Until this is done, the emergency procedures should provide for an individual to be stationed at the turbine-driven pump in the event of the loss of all ac power to monitor pump bearing and/or lube oil temperatures. If necessary, this operator would operate the turbine-driven pump in an on-off mode until ac power is restored. Adequate lighting powered by direct current (dc) power sources and communications at local stations should also be provided if manual initiation and control of the AFW system is needed. (See Recommendation GL-3 for the longer-term resolution of this concern.)

5.2.6 AFW System Flow Path Verification

Concern - Periodic testing of the AFW system is accomplished by testing of individual components of one flow train (periodic pump recirculation flow test or automatic valve actuation), thus altering the normal AFW system flow path(s). The flow capability of the entire AFW system, or at least one integral AFW system train, is only demonstrated on system demand following a transient, or if the AFW system is used for normal plant startup or shutdown.

Recent Licensee Event Reports indicate a need to improve the quality of system testing and maintenance. Specifically, periodic testing and maintenance procedures inadvertently result in (1) more than one AFW system flow train being unavailable during the test, or (2) the AFW system flow train under test not being properly restored to its operable condition following the test or maintenance work. The Office of Inspection and Enforcement has taken action to correct Item (1); the recommendation below is made to correct Item (2).

Recommendation GS-6 - The licensee should confirm flow path availability of an AFW system flow train that has been out of service to perform periodic testing or maintenance as follows:

(1) Procedures should be implemented to require an operator to determine that the AFW system valves are properly aligned and a second operator to independently verify that the valves are properly aligned.

(2) The licensee should propose Technical Specifications to assure that, prior to plant startup following an extended cold shutdown, a flow test would be performed to verify the normal flow path from the primary AFW system water source to the steam generators. The flow test should be conducted with AFW system valves in their normal alignment.

5.2.7 Non-Safety Grade, Non-Redundant AFW System Automatic Initiation Signals

Concern - Some plants with an automatically initiated AFW system utilize some initiation signals that are not safety-grade, do not meet the single failure criterion, and are not required by the Technical Specifications to be tested periodically. This can result in reduced reliability of the AFW system.

Recommendation GS-7 - The licensee should verify that the automatic start AFW system signals and associated circuitry are safety-grade. If this cannot be verified, the AFW system automatic initiation system should be modified in the short-term to meet the functional requirements listed below. For the longer term, the automatic initiation signals and circuits should be upgraded to meet safety-grade requirements as indicated in Recommendation GL-5.

(1) The design should provide for the automatic initiation of the AFW system flow.

(2) The automatic initiation signals and circuits should be designed so that a single failure will not result in the loss of AFW system function.

(3) Testability of the initiation signals and circuits shall be a feature of the design.

(4) The initiation signals and circuits should be powered from the emergency buses.

(5) Manual capability to initiate the AFW system from the control room should be retained and should be implemented so that a single failure in the manual circuits will not result in the loss of system function.

(6) The ac motor-driven pumps and valves in the AFW system should be included in the automatic actuation (simultaneous and/or sequential) of the loads to the emergency buses.

(7) The automatic initiation signals and circuits shall be designed so that their failure will not result in the loss of manual capability to initiate the AFW system from the control room.

5.2.8 Automatic Initiation of AFW Systems

Concern - For plants with a manually initiated AFW system, there is the potential for failure of the operator to manually actuate the system following a transient in time to maintain the steam generator water level high enough to assure reactor decay heat removal. While IE Bulletin 79-06B requires a dedicated individual for CE-designed operating plants with a manually initiated AFW system, further action should be taken in the short-term. This concern is identical to Item 2.1.7a of NUREG-0578.

Recommendation GS-8 - The licensee should install a system to automatically initiate AFW system flow. This system need not be safety-grade; however, in the short-term, it should meet the criteria listed below, which are similar to Item 2.1.7a of NUREG-0578.[13] For the longer term, the automatic initiation signals and circuits should be upgraded to meet safety-grade requirements as indicated in Recommendation GL-2.

(1) The design should provide for the automatic initiation of the AFW system flow.

(2) The automatic initiation signals and circuits should be designed so that a single failure will not result in loss of AFW system function.

(3) Testability of the initiating signals and circuits should be a feature of the design.

(4) The initiating signals and circuits should be powered form the emergency buses.

(5) Manual capability to initiate the AFW system from the control room should be retained and should be implemented so that a single failure in the manual circuits will not result in the loss of system function.

(6) The ac motor-driven pumps and valves in the AFW system should be included in the automatic actuation (simultaneous and/or sequential) of the loads to the emergency buses.

(7) The automatic initiation signals and circuits should be designed so that their failure will not result in the loss of manual capability to initiate the AFW system from the control room.

5.3 Additional Short-Term Recommendations

The following additional short-term recommendations resulted from the staff's Lessons Learned Task Force review and the Bulletins & Orders Task Force review of AFW systems at Babcock & Wilcox-designed operating plants subsequent to our review of the AFW system design in W- and CE-designed operating plants. They have not been examined for specific applicability to individual W and CE plants.

5.3.1 Primary AFW Water Source Low Level Alarm

Concern - Plants which do not have level indication and alarm for the primary water source may not provide the operator with sufficient information to properly operate the AFW system.

Recommendation - The licensee should provide redundant level indication and low level alarms in the control room for the AFW system primary water supply to allow the operator to anticipate the need to make up water or transfer to an alternate water supply and prevent a low pump suction pressure condition. The low level alarm setpoint should allow at least 20 minutes for operator action, assuming that the largest capacity AFW pump is operating.

5.3.2 AFW Pump Endurance Test

Concern - Since it may be necessary to rely on the AFW system to remove decay heat for extended periods of time, it should be demonstrated that the AFW pumps have the capability for continuous operation for an extended time without failure.

Recommendation - The licensee should perform a 72-hour endurance test on all AFW system pumps, if such a test or continuous period of operation has not been accomplished to date. Following the 72-hour pump run, the pumps should be shut down and cooled down and then restarted and run for one hour. Test acceptance criteria should include demonstrating that the pumps' bearing/bearing oil temperatures and vibration remain within design limits and that pump room ambient conditions (temperature, humidity) do not exceed environmental qualification limits for safety-related equipment in the room.

5.3.3 Indication of AFW Flow to the Steam Generators

Concern - Indication of AFW flow to the steam generators is important to the manual regulation of AFW flow to maintain the required steam generator water level. This concern is identical to Item 2.1.7.b of NUREG-0578.

Recommendation - The licensee should implement the following requirements as specified by Item 2.1.7.b on page A-32 of NUREG-0578:

(1) Safety-grade indication of AFW flow to each steam generator should be provided in the control room.

(2) The AFW flow instrument channels should be powered from the emergency buses consistent with satisfying the emergency power diversity requirements for the AFW system set forth in Auxiliary Systems Branch Technical Position 10-1 of the Standard Review Plan, Section 10.4.9.

5.3.4 AFW System Availability During Periodic Surveillance Testing

Concern - Some plants require local manual realignment of valves to conduct periodic pump surveillance tests on one AFW system train. When such plants are in this test mode and there is only one remaining AFW system train available to respond to a demand for initiation of AFW system operation, the AFW system redundancy and ability to withstand a single failure are lost.

Recommmendation - Licensees with plants which require local manual realignment of valves to conduct periodic tests on one AFW system train, and which have only one remaining AFW train available for operation should propose Technical Specifications to provide that a dedicated individual who is in communication with the control room be stationed at the manual valves. Upon instruction from the control room, this operator would realign the valves in the AFW system from the test mode to its operational alignment.

5.4 Long-Term Generic Recommendations

5.4.1 Automatic Initiation of AFW Systems

Concern - This concern is the same as short-term generic Recommendation GS-8; namely, failure of an operator to acutuate a manual start AFW system in time to maintain steam generator water level high enough to assure reactor decay heat removal via the steam generator(s).

Recommendation GL-1 - For plants with a manual starting AFW system, the licensee should install a system to automatically initiate the AFW system flow. This system and associated automatic initiation signals should be designed and installed to meet safety-grade requirements. Manual AFW system start and control capability should be retained with manual start serving as backup to automatic AFW system initiation.

5.4.2 Single Valves in the AFW System Flow Path

Concern - This concern is the same as short-term generic Recommendation GS-2; namely, AFW system inoperability due to an inadvertently closed manual valve that could interrupt all AFW system flow.

Recommendation GL-2 - Licensees with plant designs in which all (primary and alternate) water supplies to the AFW systems pass through valves in a single flow path should install redundant parallel flow paths (piping and valves).

Licensees with plant designs in which the primary AFW system water supply passes through valves in a single flow path, but alternate AFW system water supplies connect to the AFW system pump suction piping downstream of the above valve(s), should install redundant valves parallel to the above valve(s) or provide automatic opening of the valve(s) from the alternate water supply upon low pump suction pressure.

The licensee should propose Technical Specifications to incorporate appropriate periodic inspections to verify the valve positions into the surveillance requirements.

5.4.3 Elimination of AFW System Dependency on Alternating Current Power Following a Complete Loss of Alternating Current Power

Concern - This concern is the same as short-term generic Recommendation GS-5; namely, delay in initiation of AFW system operation or maintaining AFW system operation following a postulated loss of onsite and offsite ac power, i.e., ac power blackout.

Recommendation GL-3 - At least one AFW system pump and its associated flow path and essential instrumentation should automatically initiate AFW system flow and be capable of being operated independently of any ac power source for at least two hours. Conversion of dc power to ac power is acceptable.

5.4.4 Prevention of Multiple Pump Damage Due to Loss of Suction Resulting from Natural Phenomena

Concern - In many of the operating plants, the normal water supply to the AFW system pumps (including the interconnected piping) is not protected from earthquakes or tornadoes. Any natural phenomenon severe enough to result in a loss of the water supply could also be severe enough to cause a loss of offsite power with loss of main feedwater, resulting in an automatic initiation signal to start the AFW system pumps. The pumps would start without any suction head, leading to cavitation and multiple pump damage in a short period of time, possibly too short for the operators to take actions that would protect the pumps. This may lead to unacceptable consequences for some plants due to a complete loss of feedwater (main and auxiliary).

Recommendation GL-4 - Licensees having plants with unprotected normal AFW system water supplies should evaluate the design of their AFW systems to determine if automatic protection of the pumps is necessary following a seismic event or a tornado. The time available before pump damage, the alarms and indications available to the control room operator, and the time necessary for assessing the problem and taking action should be considered in determining whether operator action can be relied on to prevent pump damage. Consideration should be given to providing pump protection by means such as automatic switchover of the pump suctions to the alternate safety-grade source of water, automatic pump trips on low suction pressure, or upgrading the normal source of water to meet seismic Category I and tornado protection requirements.

5.4.5 Non-safety-Grade, Non-Redundant AFW System Automatic Initiation Signals

Concern - This concern is the same as short-term generic Recommendation GS-7; namely, reduced AFW system reliability as a result of use of non-safety-grade, non-redundant signals, which are not periodically tested, to automatically initiate the AFW system.

Recommendation GL-5 - The licensee should upgrade the AFW system automatic initiation signals and circuits to meet safety-grade requirements.

5.5 Plant-Specific AFW System Recommendations

The short-term and long-term plant-specific recommendations applicable to the AFW systems for each CE operating plant are identified and discussed in Appendix X.

5.6 Summary of AFW System Recommendations for Combustion Engineering Designed Operating Plants

Table III-4 summarizes the short-term and long-term generic and plant specific recommendations for the AFW system of each CE-designed operating reactor. The additional generic short-term recommendations discussed in Section 5.3 of this appendix are not included in Table III-4; however, these recommendations are included in the individual plant AFW system evaluations in Appendix X.

6. REFERENCES

1. Standard Review Plan (NUREG-75/087), Chapter 10.4.9, and Branch Technical Position ASB 10-1.

2. Reactor Safety Study (WASH-1400), October 1975.

3. Memorandum, S. Levine to H. Lewis, dated June 27, 1978.

4. "Risk Assessment Review Group to the U.S. Nuclear Regulatory Commission" (the "Lewis Committee Report"), NUREG/CR-0400.

5. Commission Policy on Risk Assessment.

6. Identification of Unresolved Safety Issues Relating to Nuclear Power Plants, NUREG-0510.

7. Station Blackout, Generic Task Action Plan A-44 (See Appendix A of NUREG-0510).

8. Paper presented at American Nuclear Society by S. Asselin, J. Hickman, et al, 1978.

9. IE Bulletin 79-06A.

10. IE Bulletin 79-06B.

Table III-4 (CE)

Plant	Generic Recommendations: Short Term								Generic Recommendations: Long Term					Plant Specific Recommendations: Short Term	Plant Specific Recommendations: Long Term
	GS-1: Tech Spec LCO Train Outage Time Limit	GS-2: Tech Spec-Single Flow Path Manual Valves	GS-3: AFWS Flow Throttling-Water Hammer	GS-4: Emergency Procedure-Backup Water Supplies	GS-5: Emergency Procedure-AC Power Blackout	GS-6: Flow Path Verification	GS-7: Non-Safety Grade AFWS Automatic Start Signals	GS-8: Automatic Actuation of AFWS	GL-1: Automatic Actuation of AFWS	GL-2: Single Flow Path-Manual Valves	GL-3: Eliminate AC Power Dependency of One Train	GL-4: Multiple Pump Damage Protection-Natural Phenomena	GL-5: Non-Safety Grade AFWS Automatic Start Signals		
Arkansas 2 1-elect pump 1-turbine pump Automatic initiation						X	X						X	Propose technical specification revision to provide pressure/flow criteria for electric pump periodic tests	-Evaluate postulated break in AFW discharge lines concurrent with a single active failure to 1) determine necessary change in AFWS design or procedures or 2) describe how plant can be safely shutdown by use of other available systems. -Evaluate capability to isolate a break downstream of turbine pump steam admission valve concurrent with single active failure of D-C emergency Division II bus.
Calvert Cliffs 1&2 2 turbine pumps per unit Manual Initiation		X		X	X	X		X	X	X	X			Propose revised Tech Specs to require periodic testing of manual valves	-Motor operated inlet valves and associated equipment should be qualified for environment resulting from main steam or feed line break.

Table III-4 (CE)

Plant	Generic Recommendations: Short Term								Generic Recommendations: Long Term					Plant Specific Recommendations: Short Term	Plant Specific Recommendations: Long Term
	GS-1: Tech Spec LCO Train Outage Time Limit	GS-2: Tech Spec-Single Flow Path Manual Valves	GS-3: AFWS Flow Throttling-Water Hammer	GS-4: Emergency Procedure-Backup Water Supplies	GS-5: Emergency Procedure-AC Power Blackout	GS-6: Flow Path Verification	GS-7: Non-Safety Grade AFWS Automatic Start Signals	GS-8: Automatic Actuation of AFWS	GL-1: Automatic Actuation of AFWS	GL-2: Single Flow Path-Manual Valves	GL-3: Eliminate AC Power Dependency of One Train	GL-4: Multiple Pump Damage Protection-Natural Phenomena	GL-5: Non-Safety Grade AFWS Automatic Start Signals		
Calvert Cliffs (cont.)															-Evaluate 1) postulated break in single flow path in AFW pump discharge lines and turbine driven pump steam supply line and 2) postulated break in AFW discharge line concurrent with a single active failure to 1) determine necessary change in AFWS design or procedures or 2) describe how plant can be safely shut down by use of other available systems.
Ft. Calhoun 1-elect pump 1-turbine pump Semi-automatic Initiation (elect pump manually connected to diesel generator)		X		X		X	X		X	X			X	-Re-evaluate position of valves FW 744 and 745 to reduce impact on AFWS of pipe break in pump discharge cross connect. -Prepare procedure to assure operator makes motor driven pump train available following loss of offsite power.	-Evaluate pipe break in AFW pump discharge single flow path and AFW pump discharge line break concurrent with single active failure to 1) determine necessary changes in AFW design or procedures or 2) demonstrate safe plant shutdown by use of other available systems.

Table III-4 (CE)

Plant	Generic Recommendations: Short Term								Generic Recommendations: Long Term					Plant Specific Recommendations: Short Term	Plant Specific Recommendations: Long Term
	GS-1: Tech Spec LCO Train Outage Time Limit	GS-2: Tech Spec-Single Flow Path Manual Valves	GS-3: AFWS Flow Throttling-Water Hammer	GS-4: Emergency Procedure-Backup Water Supplies	GS-5: Emergency Procedure-AC Power Blackout	GS-6: Flow Path Verification	GS-7: Non-Safety Grade AFWS Automatic Start Signals	GS-8: Automatic Actuation of AFWS	GL-1: Automatic Actuation of AFWS	GL-2: Single Flow Path-Manual Valves	GL-3: Eliminate AC Power Dependency of One Train	GL-4: Multiple Pump Damage Protection-Natural Phenomena	GL-5: Non-Safety Grade AFWS Automatic Start Signals		
Maine Yankee 2 elect pumps 1 turbine pump Manual Initiation		X		X		X		X	X	X				-Verify that the air accumulator will hold CIS valve in turbine pump steam line open for at least 2 hours following loss of all AC power. -Revise Tech Spec to require monthly periodic AFWS testing rather than quarterly. -Establish procedure to assure AFWS capability is maintained for all failure modes of AC/DC Division IV.	-Eliminate potential for degradation of AC/DC Division IV to affect operability of all water flow control valves and turbine pump steam admission valve. -Evaluate following concerns and either demonstrate AFWS capability or modify design: (1) break in AFWS common discharge header requires isolation of all AFWS flow trains, (2) in event of steam or feedwater line break (main or auxiliary) requires manual isolation of AFWS to affected area.
Millstone 2 2 elect pumps 1 turbine pump Manual Initiation				X	X	X		X	X		X				

Table III-4 (CE)

Plant	Generic Recommendations: Short Term								Generic Recommendations: Long Term					Plant Specific Recommendations: Short Term	Plant Specific Recommendations: Long Term
	GS-1: Tech Spec LCO Train Outage Time Limit	GS-2: Tech Spec-Single Flow Path Manual Valves	GS-3: AFWS Flow Throttling-Water Hammer	GS-4: Emergency Procedure-Backup Water Supplies	GS-5: Emergency Procedure-AC Power Blackout	GS-6: Flow Path Verification	GS-7: Non-Safety Grade AFWS Automatic Start Signals	GS-8: Automatic Actuation of AFWS	GL-1: Automatic Actuation of AFWS	GL-2: Single Flow Path-Manual Valves	GL-3: Eliminate AC Power Dependency of One Train	GL-4: Multiple Pump Damage Protection-Natural Phenomena	GL-5: Non-Safety Grade AFWS Automatic Start Signals		
Palisades 1 elect pump 1 turbine pump Manual Initation		X		X		X		X	X	X				-Evaluate affect of any failure mode (single event) of power Division 1 on maintaining AFWS capability. Prepare procedure to mitigate or modify design. -Verify that pressure drop across atmospheric dump valves actuated by common controller is large enough to assure sufficient steam pressure and flow to turbine pump. -Verify that air accumulator will hold valves in TDAFWP steam supply line open for 2 hours following loss of all AC power.	-Evaluate (1) postulated break in single flow path in AFW discharge lines and (2) postulated break in AFW discharge lines concurrent with a single active failure to (1) determine necessary changes in AFW design or procedures or (2) describe how plant can be safely shutdown by use of other available systems. -Evaluate the following concerns with respect to long term corrective action: (1) steam dump valves powered from single source, (2) power division 1 failure mode, and (3) lack of wide range SG level instrumentation in control room. Determine necessary changes in AFW design or procedures or describe how plant can be brought to safe shutdown by other available systems.

Table III-4 (CE)

Plant	Generic Recommendations: Short Term								Generic Recommendations: Long Term					Plant Specific Recommendations: Short Term	Plant Specific Recommendations: Long Term
	GS-1: Tech Spec LCO Train Outage Time Limit	GS-2: Tech Spec-Single Flow Path Manual Valves	GS-3: AFWS Flow Throttling-Water Hammer	GS-4: Emergency Procedure-Backup Water Supplies	GS-5: Emergency Procedure-AC Power Blackout	GS-6: Flow Path Verification	GS-7: Non-Safety Grade AFWS Automatic Start Signals	GS-8: Automatic Actuation of AFWS	GL-1: Automatic Actuation of AFWS	GL-2: Single Flow Path-Manual Valves	GL-3: Eliminate AC Power Dependency of One Train	GL-4: Multiple Pump Damage Protection-Natural Phenomena	GL-5: Non-Safety Grade AFWS Automatic Start Signals		
Palisades (cont.)															-Complete evaluation of SEP concerns regarding (1) missiles, pipe breaks, seismic events, tornado and floods, (2) need for AFW pump room water level alarm.
St. Lucie 1 2 elect pumps (combined flow required) 1 turbine pump Manual Initiation				X	X	X		X	X		X				-Modify design to provide means to supply alternate water sources directly to AFWS within 1/2 hour or less. -Evaluate postulated AFW discharge pipe break concurrent with single active failure to determine necessary changes in AFWS design or procedures or demonstrate safe plant shutdown capability by use of other available systems.

APPENDIX IV

CONTROL SYSTEMS

1. INTRODUCTION

The events at Three Mile Island have demonstrated the importance of natural circulation cooling during the course of a loss-of-coolant accident, particularly in the post-accident recovery phase of operation. In addition, natural circulation cooling is a required plant response for some anticipated transients. Accordingly, some of the control systems which potentially can cause transients or influence natural circulation cooling are discussed in this section. The effects of failures on those systems that might impede the development of adequate natural circulation cooling or lead to increased challenges to safety systems are also discussed.

The achievement of a stable natural circulation cooling mode in a PWR with subcooled primary coolant in the steam generators and the eventual cooldown by natural circulation following some anticipated transients and postulated small breaks in the reactor coolant system involves two basic requirements: (1) adequate heat removal, and (2) sufficiently high primary system pressure (i.e., subcooling).

Adequate heat removal capability is provided by controlling the steam generator secondary side coolant levels and pressures. Such control provides stored and decay heat removal capability to establish the density difference in the primary coolant which provides the driving force for natural circulation. Upon loss of offsite power, this requirement is met using the auxiliary feedwater system and the steam generator safety and atmospheric dump valves.

Sufficiently high primary system pressure is obtained by refilling the reactor coolant system to eliminate or prevent the formation of pockets of steam and noncondensible gases at local or overall high points in the RCS. Such pockets could prevent natural circulation and reduce heat transfer to the steam generators. This requirement is met by using high pressure safety injection or charging pumps and by maintaining adequate control of the RCS pressure using pressurizer pressure and level control systems.

The pressurizer pressure control system in CE-designed plants includes proportional and backup heaters and a pressurizer spray system for use during normal operation. The proportional and backup heaters are used to reestablish pressure following certain transients and to offset normal heat losses from the pressurizer. The pressurizer spray system, which is supplied by the RCS cold leg, is used to reduce pressure increases during some transients and to prevent unnecessary opening of the pressurizer power-operated relief valves (PORVs). In some plants under natural circulation conditions, when the driving force for this spray provided by the RCS pumps is lost, an

auxiliary spray line supplied by the makeup pumps in the chemical and volume control system (CVCS) can be used. These systems are used to accommodate normal operating system changes.

In addition to the above components, CE-designed plants also include PORVs to limit transient pressure increases to values less than the setpoint of the pressurizer safety valves, and pressurizer safety valves to prevent the maximum RCS pressure from exceeding 110 percent of the design pressure.

In the natural circulation cooling mode, the pressurizer pressure would be controlled by means of the pressurizer heaters and auxiliary spray such that all portions of the RCS would remain in a subcooled condition during hot standby operation and subsequent cooldown and depressurization to cold shutdown conditions.

The pressurizer level is controlled during normal operation by a "feed and bleed" process. Charging water from the CVCS makeup pumps to the RCS increases level and compensates for the reactor coolant pump seal leakoff losses. The level is decreased by letdown flow from the RCS to the CVCS. The maintenance of pressurizer level under natural circulation flow conditions at hot standby and during cooldown following some anticipated transients involves the use of the CVCS and the normal charging and letdown lines. The CVCS also serves to borate the RCS to permit reduction in system temperature to that required for residual heat removal (RHR) system operation and, eventually, the cold shutdown temperature.

These systems are described in this appendix on a generic basis. More detailed, plant specific, information is presented in Table IV-1. Other appendices of this report discuss the safety systems and other instrumentation which provide operator information. To make this information more understandable, the following introductory comments are provided:

(1) Any instrument or control system can fail and cause a transient. The failures may result in interactions which would require action from one or more safety systems to limit the consequences to acceptable levels. The effects of these events are scoped by the analyses which the applicant presents in Chapter 15 of the safety analysis reports.

(2) Because of the manual controls and multiple alarms which are provided in a typical nuclear power plant, the operator has the capability of changing the course of an event.

(3) Because of the long transport delays which result from the large physical size of the fluid systems in a nuclear power plant, time is available for an operator to take corrective actions and correct failures in nonsafety control systems. Typical corrective actions are:

(a) Closing of block valves,

(b) Placing control systems in manual control,

(c) Selecting an alternate signal source, and

(d) Selecting an alternate control strategy (e.g., changing control mode or plant operating state).

(4) Parts of the non-Class 1E control systems are safety grade. This is particularly true of sensors which measure reactor coolant system parameters.

(5) Not all of the non-Class 1E control systems are connected to onsite power sources; therefore, automatic control should not be relied upon in the event of a loss of offsite power.

(6) The transient analyses which are traditionally conducted are based on the assumption that a single system or module fails. However, a single power source may be used for most of the non-Class 1E instrumentation and controls; therefore, the failure of this bus could initiate multiple transients. The synergistic effects of these transients may not have been fully analyzed. In addition to power supply problems, there are other possible control system and process interactions which could lead to plant trip. Such interactions are being studied by Sandia Laboratories, but some brief examples are given in this report that are based on the designs for the non-Class 1E systems which are described.

In regard to these system interactions, the past record of plant operations indicates that these plant control systems have not caused any unanalyzed events. Therefore, they do not appear to be involved in any significant systems interactions. However, because these systems share sensors with each other and/or safety systems and because the plant process provides a feedback path to these systems, there continues to be a long-term need for interaction evaluations and possibly improvements in design.

2. PRESSURIZER LEVEL

The pressurizer level is programmed as a function of the average reactor coolant temperature in order to maintain the proper coolant inventory for anticipated transients. The level controller compares the measured and programmed level signals and generates a signal to modulate the letdown control valve in such a way that level is restored to its programmed value. Separate on-off controllers start or stop the standby charging pumps when level deviation setpoints are exceeded.

Two measurement channels (differential pressure transmitters) are provided and the controlling channel is selected by a switch on the control board. The automatic control channel is selected by a switch on the control board. Automatic control is normally used during operation, but manual control may be used at any time.

One charging pump is operated continuously in order to provide makeup flow for pump seal leakage and to limit letdown temperatures.

Backup control action is provided by several on-off controllers. A high level error signal stops both backup charging pumps, energizes the backup heaters and activates an alarm. A low-level error signal provides a backup signal to start all charging pumps and also activates an alarm. (This low-level signal is also used in the pressurizer pressure control system to shut off the pressurizer heaters.)

Because the operator has the capability to select pressure sensors and bypass defective temperature sensors, the operator has the capability to reconfigure parts of this control system to compensate for some module failures.

The pressurizer level control system is a subsystem of the chemical and volume control system. During normal plant operation, the charging flow varies to produce the flow demanded by the pressurizer water level controller. The pressurizer water level is programmed as a function of coolant average temperature, with the highest average temperature (auctioneered) being used. The pressurizer water level setpoint decreases as the load is reduced from full load.

The programmed level is designed to match as nearly as possible the level changes resulting from the coolant temperature changes.

To control pressurizer water level during startup and shutdown operations, the charging flow is manually regulated from the main control room.

A low level signal is provided to turn off the pressurizer heaters.

The auctioneered T_{avg} and the pressurizer level signals are derived from the Class 1E reactor protection system. The safety signals are isolated from the control signals in accordance with the requirements of IEEE Std. 279. An individual input to the temperature auctioneer may be defeated by a console mounted bypass switch, but a failure in the auctioneer will cause a failure in both the pressurizer level control and steam dump control systems. By means of a switch in the control room an operator may select one of two pressurizer level signals for level control. Thus the operator has the capability to reconfigure parts of this control system to compensate for some module failures.

Maintaining an adequate pressurizer level is not always sufficient to assure that proper reactor coolant inventory is being maintained. As a result of the TMI-2 accident, the need to obtain a more accurate measure of reactor coolant inventory has been recognized. The two systems for making such measurements which are most often mentioned are level measurement and inventory control. It is recommended that the matter of reactor vessel level be pursued with both short-term conceptual design programs and long-term development programs, if necessary. The short-term programs should determine:

(1) The need for and the adequacy of a vessel level measurement system,

(2) The system conditions which could adversely affect each candidate system type (e.g., system flow),

(3) The accuracy which is required, and

(4) The systems which should be the subject of a long-term project.

3. PRESSURIZER-PRESSURE CONTROL SYSTEM

The pressurizer-pressure control system maintains system pressure within specified limits by the use of pressurizer heaters and spray valves.

During normal operation, a small group of heaters is proportionally controlled to maintain operating pressure. If the pressure falls below the proportional band by approximately 20 psia, all of the heaters are energized. Above the normal operating pressure range, the spray valves are proportionally opened to increase the spray flow rate as pressure rises. A small, continuous spray flow is maintained through the spray lines at all times to keep the lines warm and thereby reduce thermal shock when the control valves open, and to ensure that the boric acid concentration in the coolant loops and pressurizer is in equilibrium.

A high-pressurizer level signal energizes the backup heaters to minimize the subcooling during the transient. A low-pressurizer water level signal deenergizes all heaters, thereby providing heater protection.

Two measurement channels are provided and the controlling channel is selected by a switch on the control board. Automatic control is normally used during operation, but manual control of the heaters and the spray may be selected at any time.

An auxiliary spray system which is driven from the discharge of the charging pumps may be found in some plants.

A high pressure scram signal will also open the PORVs. The failure of the PORVs to reclose following the overpressure transient was a key factor during the TMI-2 accident. The PORVs can be operated either manually or automatically, but the control circuits for these valves currently are not single failure proof. That is, a single failure in the manual control circuit can result in a small break LOCA. Block-valves are provided upstream of the PORVs to isolate such a failure. In the event of loss of offsite power which probably will result in a feedwater transient, the operator would not have the capability for controlling the operation of the PORVs or for isolating a stuck open PORV if the PORVs and associated block valves are not powered from the emergency buses (operating CE plants now provide emergency bus power to the PORV block valves).

Table IV-1 indicates the plants that have their instrumentation and control (pressurizer pressure and level, steam generator pressure and level) on Class 1E power sources.

TABLE IV-1

CONTROL SYSTEMS USED IN CE DESIGNED PLANTS FOR NATURAL CIRCULATION

PLANT NAME	POWER SOURCES			PRESSURIZER CONTROL					
	CONTROL INSTRUMENTATION	BACKUP* HEATERS	PROPORTIONAL* HEATERS	SET POINT	PROPORTIONAL	GAIN/REPEAT RESET	DERIVATIVE	SETPOINT, PSIA, FOR PROPORTIONAL HEATERS ON 100%, AND GAIN PER PSI ABOVE SETPOINT	SETPOINT, PSIA FOR SPRAY FLOW ON 100%, AND GAIN PER PSI ABOVE SETPOINT
Arkansas Nuclear One Unit 2	1E	Non 1E	IE	Not Applicable	Not Applicable	Not Applicable	Not Applicable	2200, - 5%	Not Provided
Calvert Cliffs 1&2	Non 1E	Non 1E	Not Provided	Not Applicable	Not Applicable	Not Applicable	Not Applicable	2225, - 2%	2300, 2%
Fort Calhoun	Not Provided	Not Provided	IE	Not Provided---------->					
Maine Yankee	Pressurizer 1E SG: Non 1E	Non 1E	IE	Not Provided---------->		Not Applicable	2200, Not Provided	2200, Not Provided	Not Provided
Millstone 2	Non 1E	Non 1E	Non 1E	Not Applicable	Not Applicable	Not Applicable	Not Applicable	2225, - 2%	2350, 2%
Palisades	1E	1E	Non IE	Not Applicable	Not Applicable	Not Applicable	Not Applicable	1985, - 2%	2085, 2%
St. Lucie	Not Provided	1E	Non 1E	Not Applicable	Not Applicable	Not Applicable	Not Applicable	2225, - 2%	2300, 2%

*For additional information, see Table VII-2 in Appendix VII of this report.

4. STEAM GENERATOR WATER LEVEL

Nuclear power plants have two different different systems for maintaining steam generator water level. These systems may be classified as the normal and auxiliary feedwater systems. In newer plants, the auxiliary feedwater system is a Class 1E system with its own controls. The normal non-Class 1E main feedwater control system is discussed here. The Class 1E auxiliary feedwater system is discussed in Appendix III.

In Combustion Engineering plants, one feedwater control system (FWCS) is provided for each steam generator. The two steam generators are operated in parallel. Each feedwater control system maintains steam generator downcomer water level within acceptable limits by positioning feedwater control valves and adjusting feedwater pump speeds to regulate the feedwater flow rate to its respective steam generator.

The FWCS is a three-element control system using feedwater flow, steam flow, and steam generator downcomer water level as inputs for automatic level control above 15 percent power. Each FWCS provides output signals to position the respective feedwater control valves. In addition, each system simultaneously provides a pump speed setpoint to the turbine-driven feed water pump speed control systems.

When an abnormally high steam generator downcomer level is sensed in either steam generator, a signal is sent from the FWCS to close the associated feedwater control valves. This signal is automatically removed when the abnormal condition clears.

When a reactor trip occurs, each FWCS automatically reduces the feedwater flow rate to its respective steam generator by closing the associated main feedwater control valves, partially opening the feedwater bypass control valves, and limiting the feedwater pump speed.

The manual control mode of each FWCS may be selected by the operator at any power level. When in manual control, the operator in the control room can use a master control station to simultaneously adjust the valve positions and pump speed setpoints to maintain steam generator downcomer water level, or can choose to control valves and pump speeds separately from individual manual/automatic stations. Control at the master control station is the preferred manual operating mode since this minimizes operator control actions.

5. STEAM GENERATOR SHELL SIDE RELIEF

There are many ways of removing heat from a steam generator. However, most of these methods will not be available immediately after a scram because the main steam lines will usually be isolated. Consequently, the power operated steam generator relief valves play a significant role in establishing the driving force for natural circulation. Even when the main steam line isolation valves can be re-opened, condenser vacuum can not be maintained if offsite power is lost. (The diesel generators do not have sufficient capacity to drive the circulating water pumps.)

The only provisions in the design of CE plants for the removal of decay heat from an isolated steam generator are the code safety valves. However, some licensees have provided their own steam dump systems. These systems use power operated atmospheric dump valves to allow manual cooldown of the steam generators when the main steam isolation valves are closed, or when the main condenser is not available as a heat sink. These valves can only be actuated manually. No automatic opening or control capability is required. An atmospheric dump valve and a series isolation valve are provided in each of the four main steam lines upstream of the main steam isolation valves and outside the containment. The atmospheric dump valves are sized to maintain hot shutdown of the plant while dissipating core decay heat or to allow, over the full range of steam generator pressures during cooldown, flow of sufficient steam to achieve a maximum reactor cooldown rate of 75 degrees Fahrenheit per hour. The atmospheric dump valves are electro-hydraulically operated and can be manually positioned to control the reactor cooldown rate. The series isolation valves are electric motor-operated valves. The atmospheric dump valves and isolation valves are normally closed to preclude the possibility of an uncontrolled blowdown of a steam generator. Local manual operation of the atmospheric dump valves is available to allow local control of steam generator cooldown.

APPENDIX V

SAFETY SYSTEMS

The discussion on non-Class 1E control systems in Appendix IV described failures in systems that could challenge the reactor protection system. In some cases both the non-safety control systems and the reactor protection systems measure some of the same parameters (sometimes the same sensors are used) and operate on some of the same variables (e.g., pressurizer pressure).

There are two major components in the Combustion Engineering reactor protection system. These components are the reactor protective system (RPS) and the engineered safety features actuation system (ESFAS).

The reactor protective system consists of sensors, amplifiers, logic, and other equipment necessary to monitor selected nuclear steam supply system conditions and to effect reliable and rapid reactor shutdown if any one condition or a combination of, conditions, deviates from a preselected operating range. The system functions to protect the core and reactor coolant system pressure boundary.

The reactor protective system consists of four trip paths operating through the coincidence logic matrices to maintain power to, or remove it from, the control element drive mechanisms (CEDMs). Four independent measurement channels normally monitor each plant parameter which can initiate a reactor trip. Individual channel trips occur when the measurement reaches a preselected value. The channel trips are arranged in a two-out-of-four configuration.

The following signals, each of which is described in the subsequent paragraphs, are inputs to the reactor protection system of a typical CE-designed plant:

- Neutron Flux (Wide Range Logarithmic Channels);
- Neutron Flux (Power Range Channels);
- Reactor Coolant System Flow;
- Steam Generator Water Level (Low);
- Steam Generator Water Level (High);
- Steam Generator Pressure (Low);
- Pressurizer Pressure (High);
- Loss of Turbine;
- Containment Pressure (High);
- Thermal Margin/Low Pressure;
- Local Power Density; and
- Manual Trip.

1. NEUTRON FLUX (WIDE RANGE LOGARITHMIC CHANNELS)

The wide range logarithmic channels obtain signals from four detector channels. Each channel consists of a fission counter and a high sensitivity boron-lined proportional counter, stacked vertically and located on the reactor cavity wall around the reactor. The outputs are amplified locally and transmitted to the signal processing drawer in the control room. A signal proportional to the logarithm of neutron flux over the range from 10^{-8} percent to 150 percent of full power is obtained.

In older plants, this signal is differentiated to obtain the rate of change of power and trips at 2.6 decades per minute. In newer plants, start up rate protection is provided by a scram setpoint of one percent of full power.

2. NEUTRON FLUX (POWER RANGE SAFETY CHANNELS)

The signals for each of the four power range safety channels are obtained from one of the four detector assemblies located on the reactor cavity wall around the reactor. Each assembly consists of two uncompensated ion chambers stacked vertically to monitor the full length of the core. The direct-current (dc) signals from each set of ion chambers are fed separately and directly to the power range safety channel drawer assemblies located in the control room. The ion chambers cover the range from 0.1 percent to 200 percent power and are used for high power level trips, thermal margin trip, and local power density trips.

(1) A reactor trip in "power level Q" is provided to trip the reactor in the event of a reactivity excursion too rapid to result in a high pressure trip. This trip also helps prevent violation of the control element assembly (CEA) position vs. power level assumed in the thermal margin and local power density trips. The high power trip setpoint can be set no more than a predetermined amount above the indicated plant power. Operator action is required to increase the setpoint as plant power is increased. The setpoint is automatically decreased as power decreases. The setpoint and Q are compared in a bistable trip unit in each of the four safety channels. The high power trip is initiated by two-out-of-four coincidence logic from the four safety channels.

(2) The high linear power level trip is provided to trip the reactor when indicated neutron flux power reaches a preset value. The flux signal used is the average of the three linear subchannel flux signals originating in each nuclear instrument safety channel. The trip setpoint is nominally 125 percent of full power.

3. REACTOR COOLANT SYSTEM FLOW

The low reactor coolant flow trip is provided to protect the core against departure from nucleate boiling (DNB) in the event of a coolant flow decrease.

The flow measurement signals are provided by performing a square root function on each steam generator differential pressure signal. This provides a signal that is proportional to steam generator mass flow rate. These signals are summed to provide a signal that is proportional to reactor vessel mass flow. Both steam generator flow signals are summed for all operating modes.

A "live zero" is used to generate the reverse flow signal when operating with two pumps in one loop. The protection system flow dependent setpoint selector switch adjusts the low flow trip setpoint. A reactor trip is instituted by two-out-of-four coincidence logic from the four independent measurement channels when the flow function falls below a pre-selected value.

4. STEAM GENERATOR LEVEL (LOW)

An abnormally low steam generator water level indicates a loss of steam generator secondary water inventory. If not corrected, this would result in a loss of capability for removal of heat from the reactor coolant system.

The low steam generator water level reactor trip protects against the loss of feedwater flow incident and assures that the design pressure of the reactor coolant system will not be exceeded. The trip setpoint specified assures that sufficient water inventory will be in the steam generator at the time of trip to provide approximately 13 minutes before the auxiliary feedwater is required for the removal of decay heat.

A reactor trip signal is initiated by two-out-of-four logic from four independent channels. Each channel actuates on the lower of two signals from two downcomer level differential pressure transmitters, one on each steam generator. Audible and visual pre-trip alarms are actuated to provide for annunciation of the approach to reactor trip conditions.

5. STEAM GENERATOR LEVEL (HIGH)

An abnormally high steam generator water level could result in damage to the turbine from moisture carry over.

The high steam generator water level will trip the reactor resulting in turbine trip which closes the turbine stop valves.

The reactor trip signal is initiated by two out of four logic from four independent channels. Each channel actuates on the higher of two signals from two downcomer level differential pressure transmitters on each steam generator.

6. STEAM GENERATOR PRESSURE (LOW)

An abnormally high steam flow from one of the steam generators (e.g., that which would occur as the result of a steam line break) would be accompanied by a marked decrease in

steam pressure. To protect against an excessive rate of heat extraction from the steam generators and subsequent cooldown of the reactor coolant following a steam line break, a reactor trip is initiated by low steam generator pressure.

A reactor trip signal is initiated by two-out-of-four logic from four independent channels. Each channel actuates on the lower of two signals from two pressure transmitters: one on each steam generator. Audible and visual pretrip alarms are actuated to provide for annunciation of approach to reactor trip conditions.

Signals from these pressure transmitters also initiate closure of the main steam isolation valves on a two-out-of-four coincidence of low pressure in either steam generator.

A bypass is provided for the low steam generator pressure trip to allow performance of zero power physics testing. Bypass is accomplished manually by means of a key-operated switch in each channel. The manual bypass is available only below a preset steam pressure and is automatically removed above this setpoint.

The trip bypass is initiated manually by turning a switch to the "Bypass" position. The bypass is removed, regardless of the manual switch position if the actioneered higher of the steam generator pressures exceeds a predetermined setpoint. When the manual switch is in the "Off" position, steam generator pressure will not remove the trip as the pressure decreases.

7. PRESSURIZER PRESSURE (HIGH)

A reactor trip for high pressurizer pressure is provided to prevent excessive blowdown of the reactor coolant system by relief action through the pressurizer safety valves. A reactor trip is initiated by two-out-of-four coincidence logic from the four independent measuring channels if the pressurizer exceeds approximately 2400 psia. This signal simultaneously opens the power-operated relief valves.

8. LOSS OF TURBINE

The trip for loss of turbine is an equipment protective trip and is not required for reactor protection.

This trip is initiated above a preset power level, by actuation of two-out-of-four low hydraulic fluid pressure switches associated with the turbine-generator control system.

9. CONTAINMENT PRESSURE (HIGH)

A trip is provided on high containment pressure in order to assure that the reactor is tripped concurrent with safety injection initiation.

Four pressure measurement channels provide analog signals to bistable trip units which are connected in a two-out-of-four coincidence logic to initiate the protective action if the containment pressure exceeds a preselected value.

10. THERMAL MARGIN/LOW PRESSURE

The thermal margin/low pressure trip is provided for two purposes: (1) the thermal margin portion, in conjunction with the low reactor coolant flow trip, prevents the reactor core safety limit on DNB from being violated during anticipated operational occurrences; and (2) the low pressurizer pressure portion will trip the reactor in the event of a loss-of-coolant accident.

A reactor trip is initiated whenever the reactor coolant system pressure signal drops below 1750 psia or a computed value, whichever is higher. The computed value is a function of the higher of either delta power or neutron power, reactor inlet temperature, the number of reactor coolant pumps operating, and the axial offset. Consistent with the Technical Specifications, a minimum value of reactor coolant flow rate, the maximum azimuthal tilt, and the maximum CEA deviation permitted for continuous operation are assumed in the generation of the trip function. In addition, CEA group sequencing in accordance with the Technical Specifications is assumed, and finally, the maximum insertion of CEA banks which can occur during any anticipated operational occurrence prior to a high power level trip is assumed.

Newer CE-designed plants, such as Arkansas Nuclear One, Unit 2, also have a low departure from nucleate boiling ratio (DNBR) trip that replaces thermal margin/low pressure trip. The reactor is tripped when the calculated DNBR approaches a preset value. The calculation of DNBR is performed by the core protection calculator (CPC) based on core average power, reactor coolant pressure, reactor inlet temperature, reactor coolant flow, and the core power distribution and control element assembly position. The calculated trip setpoint includes allowances for sensor and processing time delays and inaccuracies such that a trip is generated within the CPC before violation of a minimum DNBR of 1.19 in the limiting coolant channel in the core occurs during an anticipated operational occurrence.

The low DNBR trip incorporates a low pressurizer pressure floor of 1750 lb/in^2 absolute (nominally). At this pressure, a low DNBR trip will automatically occur.

11. LOCAL POWER DENSITY (HIGH)

The high local power density trip is provided to prevent the peak local power density in the fuel from exceeding 21 kW/ft during anticipated operational occurrences. A reactor trip is initiated whenever the axial offset exceeds either a high or low calculated setpoint. The axial offset is calculated from upper and lower ex-core neutron detector channels, and the calculated setpoints are generated as a function of the core power level with the CEA group position being inferred from core power. This

trip is automatically bypassed whenever the power level is less than 15 percent of full power.

12. MANUAL TRIP

A manual reactor trip is provided to permit the operator to trip the reactor. Depressing two push-button switches on the control panel causes interruption of the ac power to the CEDM power supplies. The manual trip function is testable during reactor operation.

All the above trips are normally cleared before startup. (The loss-of-turbine trip is automatically bypassed below 15 percent power and the high rate-of-change of power trip is bypassed below 10^{-4} percent and above 15 percent power.) For some operations, it may be desirable to perform a reactor startup with some reactor parameters at values which would normally cause a trip. For these special operations, zero power mode bypass switches may be used to bypass the low flow and the low thermal margin/low pressure trip functions. Four bypass key switches are provided. Each bypass switch removes all three trip functions from one of the four protective system channels. These bypasses are automatically removed above 10^{-4} percent power. A manual bypass is provided to allow startup with a low steam generator pressure.

13. ENGINEERED SAFETY FEATURES ACTUATION SYSTEM

As in the case of Westinghouse plants, the engineered safety features actuation system (ESFAS) detects incident conditions and initiates the safeguard system(s) in Combustion Engineering plants. Also, as in Westinghouse plants, many sensors are shared with the reactor trip system.

The instrument channels monitor redundant and independent process variables and conditions and initiate a sensor channel trip when the variable or condition deviates beyond a set limit. Each of the actuation channels receives a signal from the following variables:

(1) Pressurizer Pressure

Low pressurizer pressure during power operation is indicative of a loss-of-coolant incident. It is measured with four redundant pressure transmitters. A pressure loss to 1585 psig on any two of four bistables in the engineered safety features ESF system will initiate a simultaneous safety injection actuation signal (SIAS), containment isolation activation signal (CIAS), and enclosure building filtration actuation signal (EBFAS). These signals will isolate all unnecessary lines at the containment penetration, initiate safety injection system operation, and start the enclosure building filtration system. The four pressure transmitters are also used for input signals to the reactor protective system.

(2) Containment Pressure

High containment pressure during power operation is indicative of a loss-of-coolant incident or main steam line break. It is measured with four pressure transmitters. An increase in containment pressure to 5 psig on any two of four bistables in the ESF system will initiate a simultaneous SIAS, CIAS, and EBFAS. Measurement of containment high pressure is a diverse means of sensing a loss of coolant condition. The transmitters are reverse acting type (increasing input gives a decreasing output signal) to permit failed safe operation.

A further increase in containment pressure to 27 psig will initiate a containment spray actuation signal which will start two containment spray pumps and open their respective discharge motor operated valves to start spraying.

(3) Containment Gas and Particulate Radiation

Two gaseous and two particulate monitors are used to detect the release of radioactive fission products to the containment atmosphere. The ESF logic will initiate containment purge isolation should any one of the four monitors exceed its setpoint. In addition, CIAS will also initiate containment purge isolation.

(4) Steam Generator Pressure

Each steam generator pressure is sensed by four pressure transmitters. A drop in pressure to 500 psia on any two out of the four sensor channels on either steam generator will actuate a main steam isolation signal which automatically closes both main steam isolation valves.

(5) Fuel Handling Area Radiation

Fuel handling area high radiation is sensed by four redundant area radiation monitors located on walls adjacent to the spent fuel pool. Upon detection of high radiation due to a fuel handling incident from any two of the four monitors, an auxiliary exhaust actuation signal is generated which stops the spent fuel pool area outside air supply fan and diverts the exhaust to the Enclosure Building Filtration System.

(6) Refueling Water Storage Tank Level

The safety injection pumps initially take suction from the refueling water storage tank. After the tank level has decreased to 2'-6" as measured by any two of four level sensing channels, a sump recirculation actuation signal transfers the safety injection pump suction to the containment sump for long-term recirculation.

(7) Emergency Bus Undervoltage

Undervoltage on either 4.16KV emergency bus, as sensed by low voltage on two of any four potential transformers, is indicative of a loss of power to the bus.

The two redundant and independent actuation channels monitor the sensor channel trips and, by means of two out of four coincidence logic, determine whether a protective action is required. The following actuation channels are initiated by the ESFAS:

- Safety injection actuation signal (SIAS), initiated by either low-low pressurizer pressure, high containment pressure, or by manual SIAS.

- Containment spray actuation signal (CSAS), initiated by SIAS (manual or automatic) and high-high containment pressure, or by manual CSAS.

- Containment isolation actuation signal (CIAS), initiated for automatic containment isolation by either low-low pressurizer pressure, high containment pressure, or by manual SIAS or CIAS.

- Enclosure building filtration signal (EBFAS), initiated by either low-low pressurizer pressure, high containment pressure, or by manual EBFAS or SIAS.

- Containment purge valves close signal, initiated by either high radiation (1 out of 4 logic) or by automatic or manual CIAS.

- Main steam isolation actuation signal (MSI), initiated by low steam generator pressure.

- Sump recirculation actuation signal (SRAS) initiated by low-low refueling water storage tank level or by manual SRAS.

- Auxiliary exhaust actuation signal (AEAS) initiated by either high radiation in the fuel handling area or by manual AEAS in the main control room or at the local station in the absence of EBFAS.

- The diesel generator will start on a SIAS, CSAS, CIAS or emergency bus undervoltage.

With regard to the instrument trips which are provided in the Combustion Engineering design, the staff notes that, unlike Westinghouse, CE does not provide a high pressurizer level scram nor an initiation of engineered safety features on the difference in pressure between steam generators. Thus, it appears that the Combustion Engineering plants may not scram as quickly as Westinghouse plants for certain incidents. It is recommended, therefore, that this lack of instrumentation be studied on a generic basis to determine if long term modifications are desirable.

APPENDIX VI

PRESSURIZER POWER-OPERATED RELIEF VALVES AND SAFETY VALVES

1. POWER-OPERATED RELIEF VALVE CONSIDERATIONS

The failure of the power-operated relief valve (PORV) to reclose following the overpressure transient was a key factor during the TMI-2 event. This section discusses this component design and previous operating experiences related to the PORVs used in CE-designed plants.

2. DESIGN

The reactor coolant system of CE-designed plants relies upon the combined action of the pressurizer safety valves, steam system safety valves, and the reactor protection system for overpressurization protection. In addition, in order to reduce the number of challenges to the pressurizer safety valves, most operating plants with CE-designed reactors are equipped with PORVs. However, since the PORVs are not considered part of the plant safety system, no credit is taken for their operation in the safety analysis.

Except for Arkansas Nuclear One - Unit 2 which has no PORVs, all operating plants with CE-designed reactors are equipped with two PORVs. In contrast to other PWR designs which use the PORVs to preclude high pressure reactor trips subsequent to significant load reductions, the principal function of the PORVs in CE-designed plants is to reduce the number of challenges to the pressurizer code safety valves that could result from certain transients that cause overpressure conditions.

The PORVs used on CE plants are the so-called electromatic relief valves and are identical to those used in Babcock & Wilcox plants. These valves are pilot actuated reverse-seated relief valves that use primary system pressure as the motive force to open and close the valve. When the pressure in the primary system exceeds that of the valve setpoint, the pilot valve's solenoid is energized. The energizing of the solenoid causes its plunger to actuate an operating lever which in turn opens the pilot valve. The opening of the pilot valve vents the main valve's pressure chamber, resulting in a pressure differential across the main valve disc thereby causing the valve to open and permit the discharge of the primary fluid at full rated flow. Conversely, when the pressure in the primary system drops below the valve's setpoint, the solenoid is deenergized. When the solenoid is deenergized, the pilot valve closes and steam is trapped in the chamber above the main valve disc. The trapped steam builds up pressure and forces the main valve's disc down on its seat thereby closing the PORV. During power

operation, the PORVs are actuated whenever the reactor protection system's high primary pressure trip is actuated by two or more of the four channel logic system. The PORVs are actuated by the same bistable trip units which actuate reactor trip on high RCS pressure, a feature unique to CE-designed plants.

Each PORV can be operated either automatically or manually. In the manual mode, the PORVs can be opened regardless of the RCS temperature or pressure. In the automatic mode, the PORVs will open whenever the RCS pressure exceeds the high pressure reactor trip setpoint and will remain open until the RCS pressure drops below the reseat pressure of the valve. The automatic mode is the usual mode of operating during normal plant conditions. The set pressure and reseat pressure for CE-designed plants as well as other valve data are presented in Table VI-1.

Although CE-designed plants use a two-out-of-four high pressure logic to open the PORVs, the control circuits for such actuation are not usually single failure proof. For example, a single failure in the control circuit or an operator error could cause a PORV to open inadvertently, thereby resulting in a small LOCA.

Current operating plants of CE design that are provided with PORVs include motor operated block valves upstream of the PORVs. These block valves can isolate the PORVs if seat leakage becomes excessive or the valve fails to reclose. The Palisades plant, however, normally operates with the PORVs isolated, while other plants have operated for extended periods of time with one or both PORVs isolated because of seat leakage. Although current CE designs do not include means for directly detecting such failures, the operator may use several indirect means for such detection. These means include the monitoring of the temperature of the PORV discharge piping, position indication of the pilot portion of the PORV, and level and pressure of the quench tank. Each of these means, however, has certain limitations that tend to compromise the timeliness or reliability of the indication. For example, the piping temperature detectors cannot be relied upon for prompt indication of valve failures because of the long time lag required for the discharge piping to cool off subsequent to PORV closure. Further, the position indicators only indicate whether or not the solenoid is energized without accounting for potential mechanical linkage failures; therefore, they cannot be relied upon to indicate actual valve position. The best means for detecting valve failures appears to be monitoring of the quench tank; however, this too is a rather slow process and ultimately may be ineffective as demonstrated at TMI-2. The NRC's Lessons Learned Task Force has recommended (NUREG 0578, Section 2.1.3.a) that on improvement in control room indication of PORV position should be made in the immediate future.

3. PERFORMANCE

Data from eight operating CE plants shows that the PORVs have opened approximately 25 times during normal operation for various reasons. Table VI-2 is a preliminary list of all operating CE reactors with the number of PORV openings and reason associated with each. These data come from a recent survey of CE plants and are derived in some cases from plant records and in others from the utilities' and operators' recollection.

TABLE VI-1. CODE SAFETY-RELIEF VALVES AND POWER-OPERATED RELIEF VALVES ON PRESSURIZER

PLANT NAME	Calvert Cliffs 1&2	Palisades	Millstone 2	Ft. Calhoun 1	Maine Yankee	St. Lucie 1	ANO-2
Code Safety - Relief Valves							
Manufacturer	Dresser	Dresser	Dresser	Crosby	Dresser	Crosby	Crosby
Number	2	3	2	2	3	3	2
Model No.	31733A	31739 A-1	31379A-1-X6 XMY3-05207	HB-BP-86	Series 31700	3 K6HB-DP-86	HB-BP-86
Capacity	300,000 lb/hr	230,000 lb/hr	296,000 lb/hr	200,000 lb/hr	200,000 lb/hr	200,000 lb/hr	395,000 lb/hr
Set Press., psig	2485 and 2550 ± 25	2485, 2525, 2565	2500 ± 1%	2530 ± 1% and 2485 ±1%	2485, 2510 2535	2500 ±1%	2500 ± 1%
Reseat Press., psig (approx.)	2385 and 2450 ± 25	Not provided	2400 ± 1%	2429 and 2386	2386, 2410, 2434	2400	2400 ± 1%
Malfunctions (significant)	None	None	Startup test. stuck open nail lodged in valve	None	None	None	None

TABLE VI-1 (Continued)

PLANT NAME	Calvert Cliffs 1&2	Palisades	Millstone 2	Ft. Calhoun 1	Maine Yankee	St. Lucie 1	ANO-2
Power Operated Relief Valves							
Manufacturer	Dresser	Dresser	Dresser	Dresser	Dresser	Dresser	N/A
Number	2	2	2	2	2	2	0
Type	Consolidated electromatic 31533 VX	Consolidated-electromatic 31533VX	Consolidated electromatic 31533VX	Consolidated-electromatic 31533VX	Consolidated-electromatic 31533 VX-30	Consolidated-electromatic 31533 VX-30	N/A
Capacity	153,000 lb/hr	153,000 lb/hr	153,000 lb/hr	99,000 lb/hr	150,000 lb/hr	153,000 lb/hr	N/A
Set Pressure,* psig	2385	2385	2365 ± 15	2377	2385	2400	N/A
Reseat Pressure, psig			2352 ±15psia	2370 psia	~2235	2335	N/A
Malfunctions (significant)	None	3/74 PORV stuck open with isolation valve closed	None		None		N/A

*To be revised per I&E

Table VI-2

CHALLENGES TO PORVS IN CE PLANTS

Facility	No. of Openings	Reason/No.
Calvert Cliffs 1&2	3	Note 2/2 Note 3/1
Palisades	0	Note 6
Millstone 2	9	Note 5
Ft. Calhoun 1	10	Note 1/1 Note 3/1 Note 4/8
Maine Yankee	0	
St. Lucie	3	Note 3
ANO-2	0	Note 7

SUMMARY OF PORV CHALLENGES

Transient challenges	5
Instrument/test errors	1
Intentional test/venting	10
Turbine runback	9

NOTE 1 Instrumentation or technician error
NOTE 2 Intentional test
NOTE 3 Transient response
NOTE 4 Manual opening (surveillance or venting non-condensibles)
NOTE 5 Turbine run back feature. Has since been removed from the plant
NOTE 6 Isolated during power operation
NOTE 7 None installed

The survey of the CE operating plants shows that the PORV's on these plants have been opened approximately five times due to anticipated transients. Each of these challenges was due to a load rejection/turbine trip event. Only one or two PORV openings occurred inadvertently during startup testing due to operation or maintenance error. The staff needs to confirm that all challenges and failures to reclose during preoperational and startup testing have been provided. Of all these openings on CE plants, one PORV failed to close during preoperational testing due to a wiring error. The error was corrected during the preoperational testing period and the valves reclosed correctly for all other actuations.

Combustion Engineering states that the following events, each of which is included in the plant's design bases, may cause the PORVs to open:

(1) Uncontrolled rod withdrawal.
(2) Loss of load, provided turbine bypass capacity is exceeded or unavailable.
(3) Loss of all non-emergency ac power, depending on pressurizer heat transfer assumptions.

As previously stated, CE plants are designed to minimize challenges to the pressurizer safety valves. This design philosophy results in using the same signal to open the PORV and to scram the reactor on high pressure. CE does not attempt to keep its units on line through the use of its pressurizer PORVs, as is done by Westinghouse. Furthermore, new CE designs (i.e., the CESSAR System 80) do not include or recommend the use of PORVs.

Final Safety Analysis Reports (FSARs) for CE operating plants indicate that PORVs are only challenged during the course of a few transients. Conservative analyses presented in FSARs generally indicate that loss-of-offsite power, uncontrolled rod withdrawal, loss-of-load and some turbine or generator trips will lift the PORVs. In addition, loss of secondary heat removal events coupled with a single failure in the auxiliary feedwater system may also lift the PORVs.

The vast majority of transients that actually occur in power plants are not as severe as those postulated in FSARs (e.g., the initial conditions are less limiting, system failures are not as extensive, the heat transfer coefficients are not as biased). Combustion Engineering indicates that of all the transients analyzed in FSARs, only loss-of-load, uncontrolled rod withdrawal, or loss of all non-emergency ac power could actually result in lifting a PORV. Based upon plant operating experience, the only event observed which had caused PORVs to open is the loss of load or turbine runback event.

4. LOSS-OF-LOAD TRANSIENT

Most overpressure transients, such as loss-of-load, cause high pressures to be generated in the primary system by terminating or restricting the heat removal capacity

of the secondary system. For example, if the reactor does not trip directly on turbine trip the core power remains essentially unchanged. Thus, a loss-of-load event without assumption of reactor trip or turbine trip, as assumed in the FSAR analyses, would result in a degraded secondary heat removal system by the tripping of the turbine and the closing of the turbine flow control and stop valves. Reduced secondary heat removal capability is obtained by opening the turbine bypass valves and opening the steam generator safety valves. Since the turbine bypass valves and steam generator safety valves are not capable of completely dissipating the energy generated in the core at full power, the secondary side pressure hangs up at the relief pressure of the steam generator safety valves, thereby degrading the heat transfer coefficient from the primary to secondary system and increasing primary side temperature. As a result, the primary system pressure increases, and at about 2385 psig both the reactor trips and the PORVs open on the high primary system pressure scram signal. Core power is then reduced to decay heat levels which can be accommodated by the secondary heat removal system. As a result, the primary system temperature and pressure will be reduced and the PORVs will close when their reseat pressure is attained.

5. ROD WITHDRAWAL TRANSIENT

In the case of an uncontrolled rod withdrawal, additional power is produced in the core region where the rod is withdrawn. If the rod has low worth or is withdrawn slowly, the reactor will trip on high primary system pressure. Since the turbine has no demand for additional power, the secondary system continues to remove a constant amount of energy from the primary system. Thus, the primary system will heat up and expand, resulting in an increase in primary system pressure as the core continues to generate more energy than that removed by the secondary system. The reactor will eventually scram due to high primary system pressure. In this case, the signal for high pressure scram will also cause the PORVs to open, thereby reducing primary pressure. If the rod being withdrawn has a high worth or if it is withdrawn rapidly, the reactor will scram on high flux prior to reaching the high pressure trip setpoint.

6. ACCIDENTS WHICH LIFT PORVS

Among the accidents analyzed in FSARs, CE indicates that on a "best estimate" basis a feedwater line break or a control element assembly ejection accident may lift the pressurizer power operated relief valves. Again, the PORVs would be expected to lift because of a mismatch between heat removal and heat generation.

7. ALTERNATIVES CONSIDERED TO REDUCE CHALLENGES TO THE PORVS

At the request of the NRC staff, CE investigated the possibility of changing the PORV setpoint and/or high pressure reactor trip setpoint to reduce PORV openings for transients. The alternatives described by CE follow:

(1) Raise PORV Setpoint

The equipment is designed such that the output from the same bistable comparator is used to trip the reactor and to open the PORVs on high primary system pressure. Therefore, only one set point is available, and raising this set point would invalidate the safety analysis and could increase the challenges to the safety valves. Challenges to the PORVs would not be significantly reduced because the high pressure reactor trip set point would also be raised. In contrast, other PWR designs have PORV set points at pressures less than that for high pressure reactor trip.

(2) Lower High Pressurizer Pressure Trip Setpoint

This requires the concomitant lowering of the PORV actuation set point as described above. Doing so would probably increase the number of challenges to the PORVs.

(3) Raise the Present Setpoint for the Combined PORV Opening and High Primary Pressure Trip and Add Another High Primary Pressure Trip at 2400 Psi

CE states that the existing setpoint for PORV opening and high primary pressure trip could be raised approximately 20-40 psi. This raised setting would tend to prevent primary safety valve challenges during a full loss of turbine load without a simultaneous reactor trip while simultaneously precluding PORV openings during milder pressure increases. CE highlighted the disadvantage of this alternative as follows: (1) the protective system cabinets on some of the operating plants do not have room to accommodate the additional bistable trip units and other circuits that would be required; and (2) the additional trips would be very expensive and would require considerable time to incorporate. The benefits appear to be marginal since a full load rejection would probably result in opening of the PORV anyway.

(4) Block Out and/or Deactivate PORV During Power Operation

In the event of a full power incident which causes the turbine admission valves to rapidly close in the absence of a turbine trip signal, the reactor would trip on high primary system pressure. The primary system pressure would continue rising above the 2400 psi set point until the heat removal capacity exceeds the power output of the core, at which time the primary system pressure would start to drop. Since this transient may cause the primary system safety valves to open, we agree with CE that the PORVs should be used to preclude such openings of the safety valves. Block valves can be closed to isolate the PORVs in the event a PORV fails to close; however, present safety considerations dictate that such block valves not be used to isolate safety valves which do not reseat.

(5) Reduce Operating Pressure

A reduction in operating pressure would not tend to reduce the number of PORV openings appreciably, unless the high pressure reactor trip was initiated at a lower pressure than the PORV setpoint. As previously described, such a modification would require significant equipment changes. Even at the lower operating pressure, the reactor coolant system pressure rise after a load rejection would still be terminated by the high primary pressure trip which also opens the PORV on CE plants. CE notes that at lower operating pressures that a higher pressure overshoot above the reactor trip setpoint would occur and the potential for challenging the safety valves would increase. Finally, decreasing the operating primary pressure would decrease the operating DNB ratio thereby causing the core to be operated closer to one of the safety limits.

(6) Automatically Close Block Valve Whenever PORV Fails to Close on Command

There are several ways this could be implemented. For example, the closing signal could be armed by an initial opening signal so that the block valve would be open in normal operation but automatically closed after PORV cycling. Another approach would use the concurrence of an open PORV and a PORV closure command to automatically close the block valve.

8. LIQUID AND TWO-PHASE RELIEF

Pressurized water reactor relief and safety valves are designed for operation with saturated steam as their working fluid. Analyses for anticipated transients, other than a stuck open PORV, do not account for the filling of the pressurizer which would result in two-phase or liquid relief. For a stuck open PORV, the pressurizer will fill and the PORV will experience such phenomena. In a specific case, a PORV was damaged due to water slug relief. This case suggests that the impact of water relief through either the type of PORV that failed or a PORV like those used on CE-designed plants is not well understood.

Some PWRs utilize a water seal (i.e., a small column or slug of water that remains in contact with the safety or relief valve disc on its inlet side during normal steady-state plant operation) to prevent steam leakage and hydrogen deterioration of valve seating surfaces. Typically, if the primary system reaches the relief valve setpoint during a plant transient, the slug of water is propelled by steam through the valve and into the piping leading to the pressurizer relief tank. The dynamic loads imposed on both the valve and the downstream piping by the rapidly accelerating water slug are quite severe.

Techniques have been developed within the industry for taking these loads into account in the design of the pressurizer safety and relief valves, the discharge piping, and

the associated supports. It is felt by many in the industry that the loads resulting from the accelerating water slug are more severe than those that the pressure relief system would be exposed to by the continuous discharge of subcooled liquid.

Stresses and deformations imposed on safety and relief valves must be limited to assure maintenance of structural integrity and valve operability. Similarly, stresses and deformations in the discharge piping and its supports must be limited to assure piping integrity. The piping system must be designed to prevent adverse impact on valve operability due to direct loads on the valve or deformation of piping resulting in excess discharge system flow resistance.

To date, little data is available regarding the effects of water and two-phase flow discharge through relief valves. Research has begun in Germany and Japan and is scheduled to start soon in France. We understand that CE may have valve testing capability soon.

Some testing has been completed at Erlangen, Germany using saturated steam and hot pressurized water with a pilot valve which appears to be similar to the valves used on CE and B&W reactor systems. These tests were conducted with the pilot valve connected to a primary valve, but without any fluid connection to the primary valve. The pilot valve performed as expected with saturated steam, but did not open as smoothly and completely with hot pressurized water. The French intend to test a six-inch self activated spring-loaded safety valve, while the Japanese have scheduled tests for what appear to be boiling water reactor safety-relief valves.

An additional concern relates to the operability and relief capacity of the power operated relief valves and the spring actuated safety valves in that valves currently installed on operating reactors were designed to perform their pressure relieving function using saturated steam as the working fluid. This is especially a concern as it relates to the mitigation of potential anticipated transients without scram (ATWS) events.

9. CONCLUSIONS

Based on the review described in this appendix, a number of recommendations regarding pressurizer PORVs and safety valves were formulated. Some of these recommendations have already been implemented by the NRC staff in the form of requirements (see Items 2.1.1, 2.1.2, and 2.1.3.a in Appendix A to NUREG-0578, "TMI-2 Lessons Learned Task Force Status Report and Short-Term Recommendations"). In addition to these, other recommendations were identified during our review which address the frequency of challenges to the PORVs. As mentioned above, the recommendations and their bases are discussed in Section 3 of Appendix VIII of this report.

APPENDIX VII

NATURAL CIRCULATION IN CE PLANTS

Under normal subcooled conditions in the primary system, natural circulation is initiated and maintained in CE-designed operating plants by the density gradient between the core side leg and the steam generator primary leg and the elevation difference of approximately 14 feet between the bottom of the steam generator tube sheet and the top of the active fuel. A discussion of this mode of cooling and related data are discussed in the following paragraphs.

1. NATURAL CIRCULATION TESTING

Every CE-designed operating plant has been tested to verify satisfactory system performance during natural circulation. During the power ascension testing program, the reactor power level is brought to about 35 percent of full power, at which point the reactor coolant pump breakers are opened. The reduction of flow causes an automatic scram and the primary system enters natural circulation as flow coasts down as discussed below.

During natural circulation tests, the pressurizer fluid level generally follows the primary system temperature. As the primary system temperature drops, the pressurizer level also drops due to reactor coolant volume contraction. Conversely, the level increases when temperatures increase, and the primary system pressure partially recovers due to this insurge.

At a decay heat power of about 0.5 percent full power, the natural circulation tests show that, for CE reactors, the flow-to-power ratio is about four to one. CE analyses have been generally confirmed by these tests as illustrated by the following data presented by CE to the staff during a meeting on April 25, 1979.

PLANT	(Percent of Full Power) CORE HEAT	FLOW TO POWER RATIO
Ft. Calhoun	0.5	5
Calvert Cliffs	0.53	4.2 - 4.8
St. Lucie 1	0.56	3.6 - 3.9

Figures VII-I and VII-2 show the primary system trends for a typical natural circulation test.

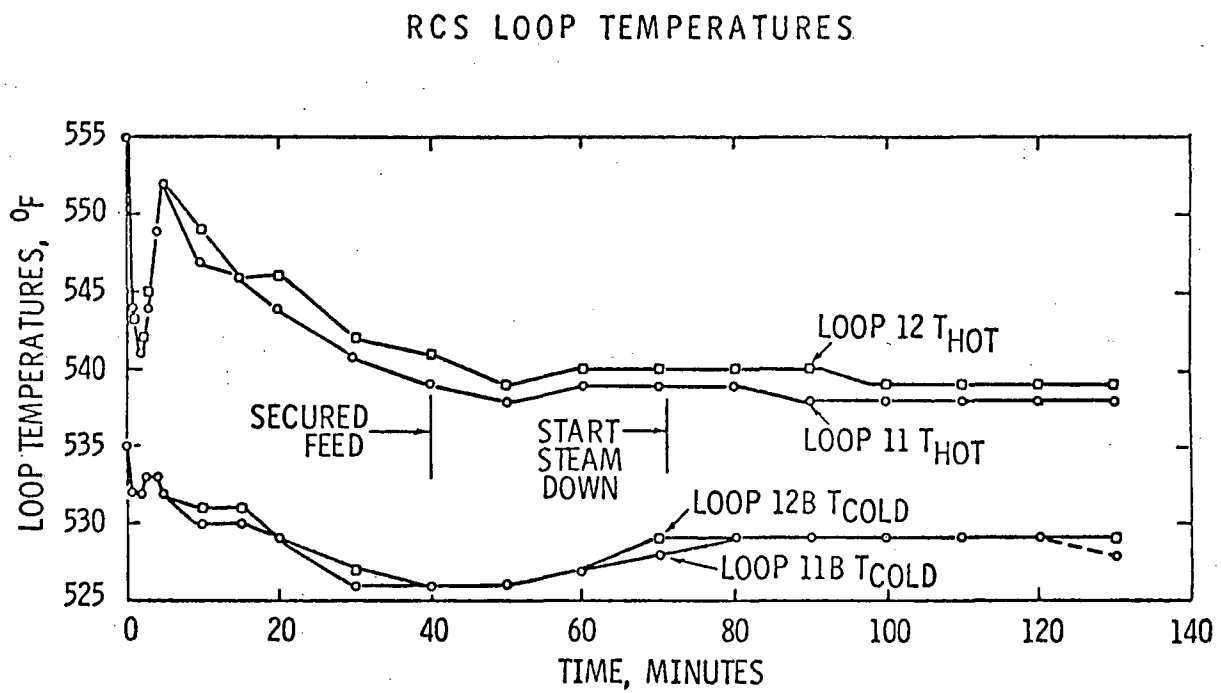

Figure VII-1 RCS Loop Temperature During Natural Circulation Test of CE Plant.

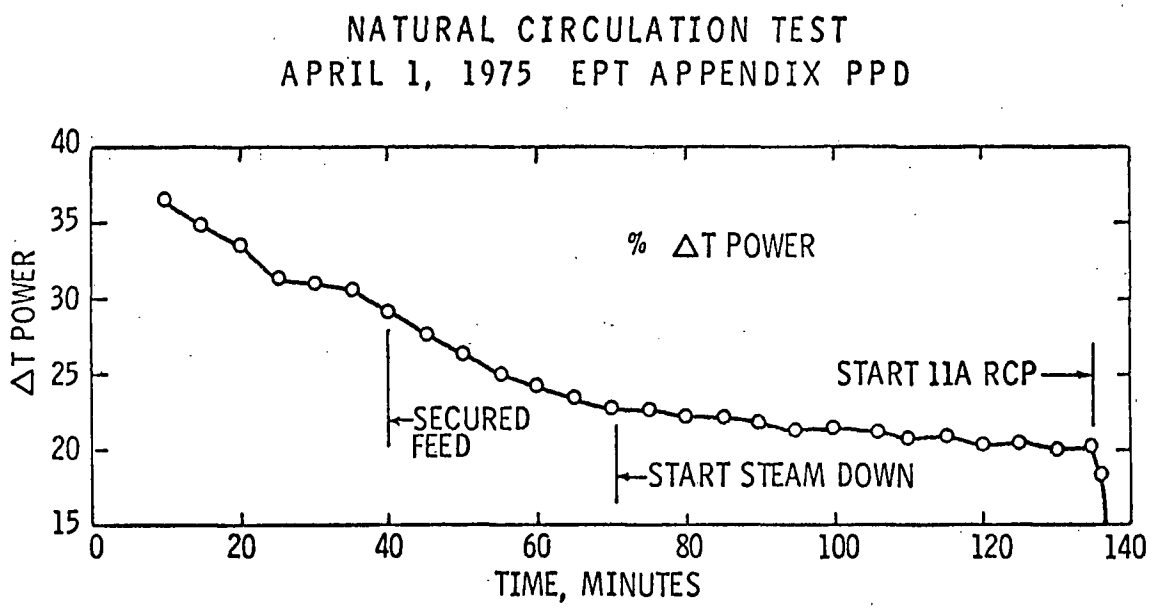

Figure VII-2 ΔT Power During Natural Circulation Test of CE Plant.

The staff conducted a survey of operating CE-designed plants to confirm that natural circulation cooling occurred, as designed, for loss-offsite power and loss of forced flow transients. The results of this survey show that natural circulation resulted in each of the 22 reported events as shown in Tables VII-1 and VII-2. On one occasion, cooling by natural circulation was conducted to the point where the shutdown cooling system could be operated.

2. PRIMARY SYSTEM PRESSURE CONTROL

Plant safety considerations dictate that natural circulation flow be established if forced reactor coolant flow is lost. In such cases, the reactor coolant system pressure must be controlled to obtain the subcooling margins required to assure continuous natural circulation. Once natural circulation has been initiated, the reactor coolant system pressure can be controlled by using the pressurizer heaters. If offsite power is available, all the pressurizer heaters on operating plants with CE-designed reactors can be used for this purpose. If offsite power is not available, then the ability to use the pressurizer heaters to control reactor coolant system pressure in these plants is somewhat restricted as indicated in Table VII-3. For example, in the case of St. Lucie Unit 1, it would be necessary for the operator to manually transfer, by switching action in the control room, the buses that serve the pressurizer heaters from the offsite distribution system to the onsite power distribution system (i.e., the distribution system served from the diesel-generators). St. Lucie personnel have indicated that this switching action could be accomplished within one minute. In the case of Palisades, the required actions to serve the heaters from the diesel-generator sources would take approximately 10 minutes, and for Fort Calhoun it would take appoximately one hour to perform the needed actions. The desirability of serving these heaters from the diesel-generator sources notwithstanding, it should be recognized that these heater loads are not engineered safety features loads; therefore, in general, they were not considered in the sizing of the diesel-generators. Towards this end, Short-Term Recommendation 2.1.1 in NUREG-0578 recommends that at least a minimum number of pressurizer heaters be served from the onsite source (i.e., the diesel-generator source on loss of offsite power) while also mandating that careful attention be given to assure that the capacity, capability, and reliability of the diesel-generators is not compromised.

The capability to energize the pressurizer heaters from the onsite power system notwithstanding, or if the pressurizer heaters are not available, then system pressure control could be accomplished by:

(1) Controlling system temperature by controlling the rate of energy removal from the primary system by the steam generators; or

(2) Controlling the liquid level in the pressurizer to account for the cooling off of the liquid, steam, and metal.

Eventually, if the pressurizer heaters are not restored, the pressurizer must be taken water-solid to control system pressure since the pressurizer itself cools off due to ambient heat losses.

Table VII-1

NATURAL CIRCULATION IN CE PLANTS

Plant	Event Description/ Number of Occurrences	Total
St. Lucie 1	Note 1/1 Note 2/1 Note 3/1	3
Calvert Cliffs 1 & 2	Note 1/1 Note 3/3	4
Palisades	Note 3/1 Note 5/3 Note 1/3	7
Millstone Unit 2	Note 3/2	2
Ft. Calhoun	Note 3/1 Note 4/3	4
Maine Yankee	Note 3/1 Note 1/1	2
	Total	22

Note 1	Loss of offsite power
Note 2	Natural circulation cooldown to shutdown cooling
Note 3	Startup test
Note 4	Reactor trip from full power

Data do not include periods when reactor coolant pumps are lost in hot standby in transition to the shutdown cooling mode.

TABLE VII-2

NATURAL CIRCULATION DATA SUMMARY

Preoperational or Startup Tests	9
Loss of Offsite Power	6
Natural Circulation Cooldown to Shutdown Cooling Mode	1
Reactor Trip from High Power	3
Unknown	3
Total	22

TABLE VII-3

PRESSURIZER HEATERS SERVED FROM ONSITE (EMERGENCY) POWER SOURCES AT OPERATING PLANTS WITH CE DESIGNED REACTORS

PLANT	PROPORTIONAL HEATERS	BACKUP HEATERS
St. Lucie Unit 1	No 1/	No 1/
Calvert Cliffs Unit Nos. 1 & 2		
Palisades	No 2/	No 2/
Millstone 2	No	No
Fort Calhoun	Yes	No 3/
Maine Yankee	Yes (300KW)	No
Arkansas Nuclear One, Unit 2	Yes (300KW)	No

1/ On loss of offsite power, the feeder breaker serving the pressurizer heater distribution panel automatically opens, thereby shedding said loads from the diesel generator. These feeder breakers can be remotely closed from the control room, so as to allow the feeding of the pressurizer heaters from the diesel generator, if required. This operation can be performed almost instantly (less than one minute).

2/ About 50% of the heaters can be manually connected to the onsite power sources by using a sliding link terminal in the control room, thereby bypassing the lockout relay which removes the heaters from the onsite power source on loss of offsite power. This operation is estimated to take 10 minutes.

3/ Although these heaters are connected to a bus which is energized from the diesel generator, the feeder breaker serving said bus is "load shed" upon loss of offsite power. However, the bus can be reenergized by jumpering certain contacts, which the licensee estimates would take approximately one hour.

Many small break LOCA scenarios lead to a filled or water solid reactor coolant system, thereby obviating the need for the pressurizer heaters for pressure control. Nevertheless, it appears desirable to be able to isolate such breaks and to return the system to a hot standby mode of operation with a bubble in the pressurizer head. Upon returning to such a mode of operation, the pressurizer heaters could be used to assure natural circulation during the long-term cooling period subsequent to a small break LOCA. The importance of subcooling to assure natural circulation and the use of the pressurizer heaters to provide the required pressure control to assure subcooling has been discussed above. However, the ability to use the pressurizer heaters for the long-term cooling period following a small break LOCA has not been addressed. As observed during the TMI-2 cooldown period, the pressurizer heaters failed due to grounds. However, these failures were intermittent such that the grounds subsequently cleared thereby permitting the further use of the heaters for pressure control. This experience illustrates that if the heaters are to be used for pressure control during the long-term cooldown period following a small break LOCA, the heaters and their power distribution and control systems should be qualified for operation in the environment associated with the small break LOCA. The level of qualification of the heaters and their power distribution and control systems on operating reactors has not been evaluated.

Small break analyses are discussed in Appendix VIII of this report and the staff recommendations pertaining to pressurizer heaters are given at the end of this appendix.

3. NATURAL CIRCULATION COOLING DURING LOSS OF MAIN FEEDWATER

The steam generator level is initially maintained constant by the auxiliary feedwater system. When the reactor coolant pump and reactor trips occur, the steam generator water level drops due to the collapse of voids from the loss of load. The level is slowly recovered using manual control of the auxiliary feedwater system. Once the steam generator water level is at the initial value, feedwater flow is terminated. The core ΔT initially decreases due to the reactor trip, then, as flow decreases, the ΔT increases indicating the removal of decay heat. The hot leg temperature (T_H) initially drops, then rises up to slightly below the initial T_H. This is significant since the primary system pressure may be dropping and the T_H may approach the saturation temperature. However, in a meeting on April 25, 1979 and in subsequent meetings, CE affirmed that the peak T_H did not approach the saturation temperature during expected events[1] Natural circulation is achieved, when the ΔT across the core indicates that decay heat is being removed and the steam generator water level has been restored to provide the elevation difference necessary for the driving force. This elevation difference in combination with the reactor coolant system pressure control (discussed in subsequent paragraphs) assures that the natural circulation cooling is maintained.

4. NATURAL CIRCULATION COOLING DURING LOSS OF OFFSITE POWER

The CE-designed plants would be expected to enter a natural circulation condition following the loss of offsite power without any operator action. However, operator

action is eventually required to control steam generator water level and reactor coolant system pressure.

During a loss of offsite power scenario, the reactor would automatically trip and the turbine would trip on either loss of load or condenser vacuum. The main feedwater pumps would also be lost since their turbines have lost the exhaust (main condenser). Except for Arkansas Nuclear One, Unit 2 (ANO-2), the auxiliary feedwater system is not automatically initiated on operating plants with CE-designed reactors. Thus, prior to implementing short-term generic recommendation GS-8 or long-term generic recommendation GL-1 as stated in Appendix III, steam generator makeup would not be available until manual operator action was taken.

The pressurizer fluid level initially drops due to the reactor coolant system cooldown, but as flow decreases and the reactor coolant system heats up due to decay heat, the pressurizer fluid level increases. CE analyses show that for this scenario, the level drops about 25% followed by an insurge of about 10%. The final pressurizer fluid level steadies out (at about 12 minutes after the loss of offsite power) at about 20% below the initial level. The fluid level remains constant until the steam generator heat transfer ability would be lost without manual addition of auxiliary feedwater at about 40 minutes. At that time, the fluid level would start to increase as the reactor coolant system heated up due to decay heat.

There are two basic means of controlling steam generator pressure during the loss of offsite power: either the atmospheric dump valves or the steam generator safety valves. Assuming that the main steam isolation valves are not closed, there are other means of relieving steam from the secondary such as condenser air ejectors, hoggers, vents and drains, and manual actuation of various relief valves. However, for the CE analysis discussed with the staff, only the atmospheric dump valves or the safety valves were assumed available. Which means is used affects, somewhat, the primary system performance since the atmospheric dump valves can control pressure at 900 psig and the safety valves can control pressure at about 1200 psig. These differing pressure levels result in different reactor coolant system temperatures.

Table VII-4 summarizes the key plant parameters during natural circulation caused by the loss of offsite power.

5. NATURAL CIRCULATION COOLING DURING STATION BLACKOUT

The CE-designed plants would be expected to enter a natural circulation condition following a station blackout (i.e., loss of all offsite ac power and the loss of all onsite ac emergency power systems). Operator action would be required to control steam generator water level and at some later point the reactor coolant system pressure. The need for other operator actions are further discussed below.

TABLE VII-4

PLANT PARAMETERS DURING NATURAL CIRCULATION
INITIATED BY LOSS OF OFFSITE POWER

Parameter	Steam Generator Pressure Control: Atmospheric Dump Valve (900 psia)	Safety Valve (1200 psia)	
Initial T_H	587°F	587°F	
Minimum T_H	548°F	562°F	
Peak T_H	573°F	585°F	
Final T_H (steady state)	See note 1	575°F	
Initial L_p (pressurizer fluid level)	50%	50%	
Minimum L_p	24%	38%	
Peak L_p	33%	46%	
Final L_p	28%	44%	
Initial P_p (pressurizer pressure)	2250 psia	2250 psia	2250 psia
Minimum P_p	1960 psia	2130 psia[3]	2130 psia[6]
Peak P_p	2240 psia	2400 psia[3,4]	2350 psia[6]
Final (steady state) P_p	See note 2	See note 5	See note 5

Note 1: T_H decreases from its value peak (occurring at t = 8 min) until t = 40 minutes, at which time steam generator heat transfer begins to degrade, then T_H starts increasing.

Note 2: P_p decreases from its peak value (occurring at t = 7 min) until t = 40 minutes, at which time steam generator heat transfer begins to degrade, then P_p increases.

Note 3: These values are calculated based on no pressurizer wall heat transfer.

Note 4: The PORV is predicted to open.

Note 5: The P_p decreases from its peak value (occurring at t = 6 min) until t = 40 minutes, at which time steam generator heat transfer begins to degrade, then P_p increases.

Note 6: These values are calculated assuming heat transfer between the pressurizer wall and the compressing steam. The PORV is not expected to open.

The station blackout analyses have neither been required by the staff nor provided by the licensees. On the more recent applications for reactor licenses, the staff has been requiring that the auxiliary feedwater system be designed to withstand the complete loss of all ac power sources including the emergency ac power source. However, the staff has not performed a complete detailed evaluation of the blackout scenario. This evaluation is expected to be performed under the Generic Task Action Plan A-44 of the Unresolved Safety Issues Program.

The blackout scenario basically should follow the scenario described for the loss of offsite power up to and including the time required for auxiliary feedwater system actuation so that the steam generators heat transfer capability would not be lost. This assumes that the primary coolant inventory remains the same as that for the loss of offsite power so that natural circulation can be achieved; however, the detailed evaluation should determine whether this assumption is correct. At the time when the auxiliary feedwater (AFW) system flow is actuated or required, the steam turbine driven train of the AFW system is the only potentially operable train. The staff has conducted a survey of all operating CE-designed plants to determine whether the AFW system can function during station blackout conditions. The results of this survey, along with the AFW system reliability analysis during a station blackout condition is given in Appendix III. The majority of the AFW system designs were found to need ac power but a lack of power could be offset by local manual actions. In such designs, the reactor operator would be required to take additional manual actions to assure the operability of the AFW system until ac power could be restored. In Appendix III, short-term generic recommendation (GS-5) addresses the staff's concern associated with manual actions during a station blackout condition, and long-term generic recommendation GL-3 recommends that at least one AFW system pump and its associated flow path and instrumentation be capable of operation independent of any ac power source for at least two hours.

Normally, the steam generator pressure can be controlled by the atmospheric dump valves or the steam generator safety valves. The atmospheric dump valves require ac power for operation. Therefore, during station blackout, operator action would be required to open the dump valves by hand so that the steam generator safety valves would not be required to cycle to relieve steam generator pressure.

It is not clear if the pressurizer heaters are necessary although they would provide a direct means of reactor coolant pressure control. Since the instrumentation and the indications available to the operator following station blackout have not been addressed, a detailed evaluation of this scenario should be considered under Task A-44.

6. NATURAL CIRCULATION FOLLOWING SMALL LOCA

Appendix VIII addresses this matter.

7. NATURAL CIRCULATION OPERATOR GUIDELINES

The plant can enter the natural circulation mode of cooling in two ways; (1) as a result of an upset such as loss of offsite power or loss of forced reactor coolant flow. and (2) as a result of intentional operator action, which might occur in the transition from forced flow cooling to shutdown cooling system cooling. In both cases, the staff believes guidelines/procedures must be provided to the operator so that sufficient cooling can be verified and necessary emergency actions should be provided by procedure in case this verification shows improper plant conditions -- such as loss of subcooled margin.

Prior to TMI-2, all CE procedures (recommendations to utilities) assumed that natural circulation was occurring. No specific guidance was provided to the operator with respect to confirmation that natural circulation was underway. CE agrees that natural circulation guidelines should be added to existing procedures that deal with abnormal operating conditions in which natural circulation may become the core heat removal mode. Their recommended guidelines are as follows:

(1) Reactor coolant system loop ΔT (T_H-T_C) is less than normal full power ΔT
(2) T_H reaches a maximum and begins to decrease within 8 minutes
(3) T_C remains constant or decreases
(4) Establish and maintain at least 20° subcooling
(5) Start one reactor coolant pump in each loop
(6) Operate atmospheric dump valves (or turbine bypass valves, if condenser is available) to maintain or reduce plant temperature.

Although the staff agrees in most cases with these guidelines, it believes that a means to measure and indicate subcooling and subcooling margin should also be considered. This means could be used as an input to the operator's decision making, procedure preparation and use. The staff does not understand the basis for the 20° subcooling, but needs to confirm that measurement uncertainties have been considered.

The staff has conducted a survey of all operating CE-designed reactors with respect to their core outlet thermocouple capability. A summary of this survey is contained in Table VII-5. The results show that every operating CE-designed reactor has most core thermocouples in an operable condition. The staff believes that the thermocouple capability should be used to advantage as supplemental means of verification of core cooling in the circulation mode. Thermocouple response for natural circulation is shown in Figure VII-3.

Specifically, with regard to procedures on natural circulation, positive guidance must be given to the operator to verify adequate flow and what action to take if adequate flow/cooling is not being achieved. An action sequence diagram such as that in Figure VII-4 suggests the thought process for generating a natural circulation procedure. Parameter values/limits (core ΔT, pressure, etc.) must be provided to the operator in the form of procedures, so they can go through this type of process.

TABLE VII-5

IN-CORE THERMOCOUPLE DATA

	No. Operable/ No. Installed	Read Out Maximum Temperature (°F) Process Computer	Alternate	Maximum Thermocouple Temperature (°F)
St. Lucie 1	32/45	780	2300	2300
Calvert Cliffs 1&2	/45	1762	2300	2300
Palisades	31/45	650	1400	2300
Millstone 2	38/45	650	2500	2500
Ft. Calhoun	27/28	945	1600	1600
ANO-2	44/44	700	2440	2440
Maine Yankee	20/27	700	2300	2300

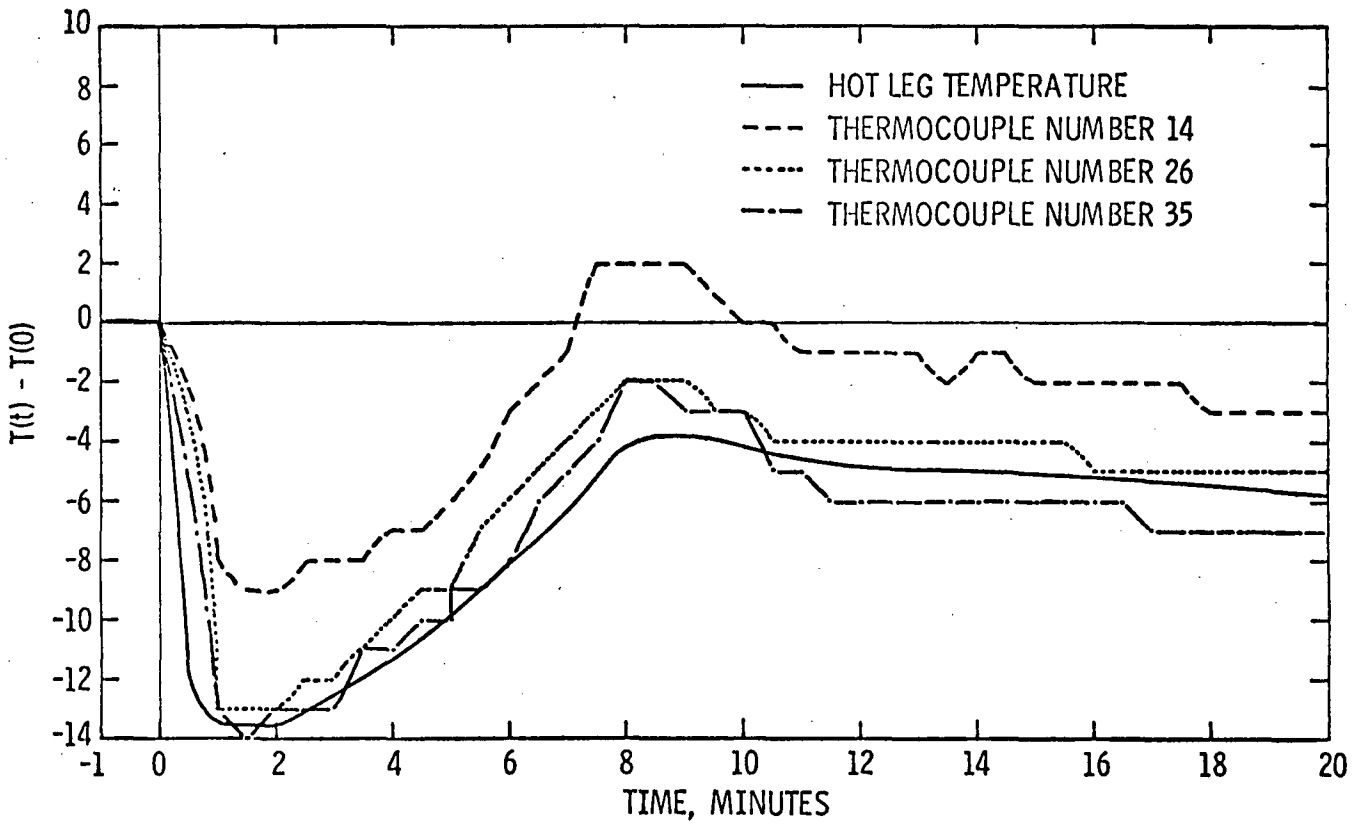

Figure VII-3 Change in Thermocouple Temperature During Natural Circulation Test of CE Plant.

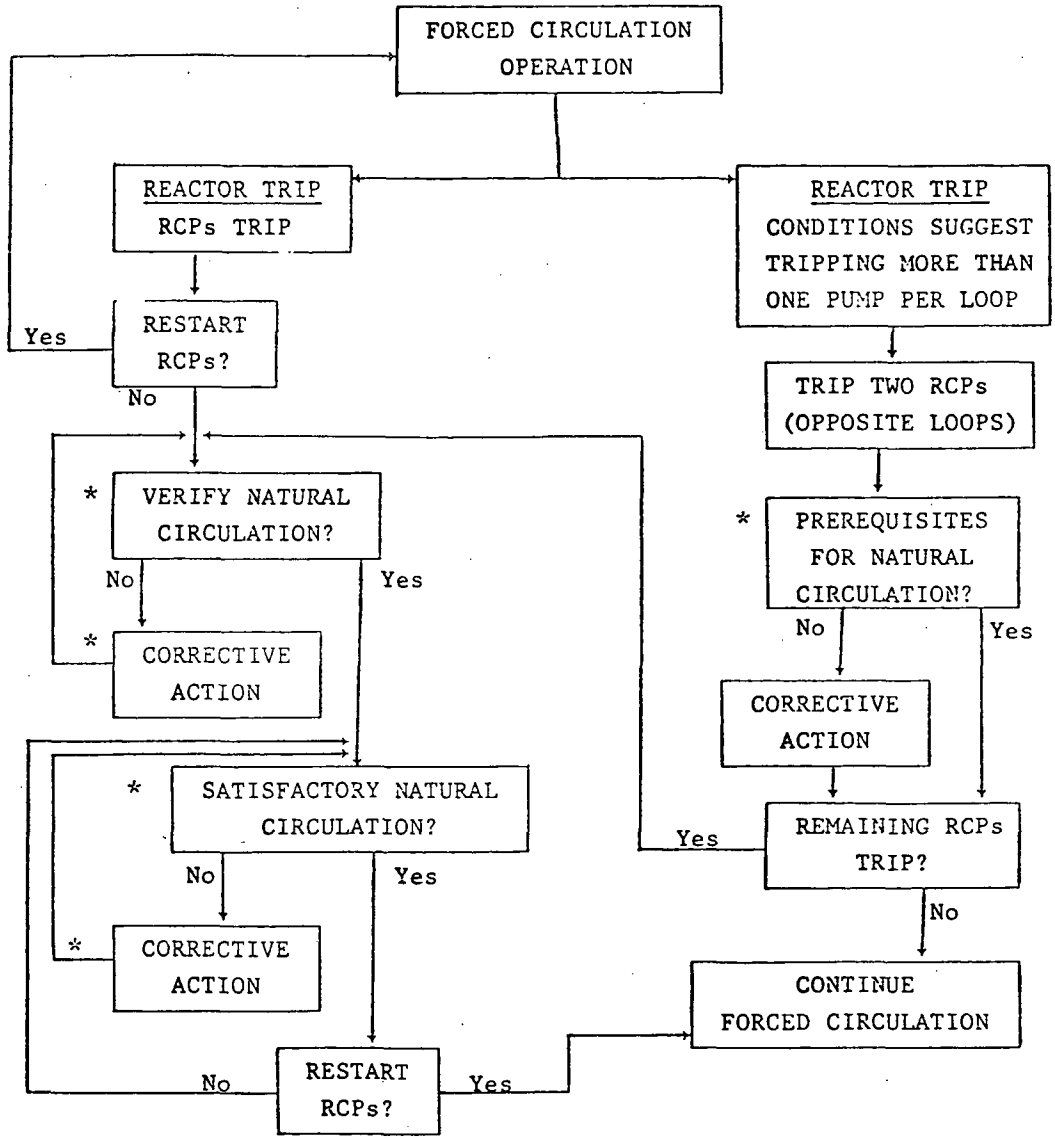

Figure VII-4 Action Sequence Diagram for Natural Circulation Procedure, CE Plant.

The Office of Nuclear Reactor Regulation, in cooperation with the Office of Inspection and Enforcement, should play an important role in the review of procedure content regarding natural circulation verification as discussed above and should review the revised procedures on a plant-by-plant basis. (Operating procedures and operator training are discussed in more detail in Appendix X.)

8. REFERENCES

(1) Memorandum, A. Thadani to D. Ross, Transmittal of Summary of April 25, 1979 Meeting with Combustion Engineering, May 2, 1979.

APPENDIX VIII

ANALYSIS

1. Introduction

Until recently, slow system depressurization accidents resulting from small breaks in the primary system have not been subjected to detailed analytical study comparable to large breaks. Typically, small breaks have been analyzed down to the smallest break size that would produce system depressurization without core uncovery in accordance with the single failure criterion and other requirements imposed by Appendix K to 10 CFR 50. These analyses assumed the availability of heat removal through the steam generators following reactor scram, power loss to the reactor coolant pumps upon scram, and normal plant protective and emergency core cooling systems activation initiated by the system depressurization. While the analyses were in the past considered sufficient to show compliance with the requirements of 10 CFR 50.46, they failed to provide all of the information needed for operator action following a small break as was pointed out by the NRC's Lessons Learned Task Force.[1]

Recent events in operating plants, including the Three Mile Island, Unit 2 (TMI-2) accident, have shown that; (1) the most likely small breaks; namely, relief or safety valve failures, are significantly smaller in size than the small breaks analyzed in plant safety evaluations; (2) plant response to valve failures and the required operator action for valve failures is different than for larger breaks; (3) auxiliary feedwater systems did not perform as expected; and (4) the actual operator actions did not follow the assumptions of the safety evaluations. For example, in two out of four reported events (Davis-Besse, Oconee-3, TMI-2, and a foreign PWR (Beznau) built to Westinghouse design), where a pressurizer power operated relief valve (PORV) was actuated by high pressure, and failed in the open position, it is known that the operators prematurely terminated high pressure injection (HPI) flow on the basis of high coolant level in the pressurizer during the early part of the transient even though the pressure was low.

Each of these small break accidents was initiated by feedwater flow interruption leading to primary system pressure rise to the PORV setpoint. In the Davis-Besse and Oconee incidents, emergency feedwater was activated as designed, but did not prevent primary pressure rising to the relief valve setpoint, nor was it supposed to by design. Emergency feedwater response in the TMI-2 plant was delayed for eight minutes following loss of main feedwater, while emergency feedwater response in the Beznau plant was not described in available reports.

In three of these four cases of stuck-open PORVs, reactor coolant pump operation was maintained for the duration of the transient. The reactor coolant pumps were tripped

only in the TMI-2 case, after one hour into the transient. In two of the four cases, all steam generators remained operational for the duration of the transients. One steam generator boiled dry during the Davis-Bessee event due to failure of an auxiliary feedwater system pump to come up to speed when automatically activated. One steam generator was isolated after several hours in the TMI-2 accident due to suspected tube ruptures.

Reassessment of the failure modes assumed in small break accidents as a result of these events, particularly in light of the TMI-2 accident, have led the staff and industry to a considerably broader interpretation of potential accident scenarios then held previously.

This reassessment has included a realistic evaluation of steam generator heat removal capability, considered cases where the conditions for emergency core cooling system (ECCS) pump activation were not reached, and cases with reactor coolant pumps operating instead of tripped. As a basis for this reassessment, the reactor vendors have been requested to consider all probable small break scenarios and their consequences on a generic basis for their plant designs. Specific NRC staff concerns were summarized in a letter(2) to all CE-designed operating plants which identified 16 items related to the analyses of small breaks, the consequences of failure or malfunction of primary components controlling system response to small breaks, possible operator intervention to control system response when such failures or malfunctions occur, and the preparation of generic guidelines for emergency procedures to be followed in the event of small break LOCAs. The response to this request has been summarized in report (CEN-114-P)(3) which addresses each of the 16 areas identified in the NRC letter which include analyses for different small break scenarios. These analyses cover CE plant designs generically, and were selected to the extent possible to produce bounding results for all operating CE plants for the accident scenarios in question.

Results of the staff review of this report are summarized in the next section, and further discussion of the findings on each of the principal areas of concern to the staff follow. We have also benefited from the investigation of PORV design and performance reported in Appendix 19 to the "Report of the President's Commission on the Accident at Three Mile Island."(4)

2. Conclusions and Recommendations

Our evaluations of the submittals by CE and the CE Owners Group is divided into sections discussing (1) the probability of a small-break LOCA brought about by the failure of a relief or safety valve to close during an anticipated transient, (2) concerns of Mr. C. Michelson of the Tennessee Valley Authority on small-break LOCAs, (3) methods used and the analyses of reactor system response to small-break LOCAs, and (4) staff audit calculations of CE results.

Conclusions are presented at the end of each of these sections. Our most significant conclusions and recommendations are provided below.

1. The small-break LOCA analysis methods used by CE are satisfactory for predicting trends in plant behavior following a small-break LOCA. The results of the analyses can be used to develop improved emergency procedures, and to train reactor operators. However, several individual models are identified in Section 4.2.1 as requiring improvement or further confirmation. In addition, comparison of the total analysis method with available small-break integral test data (Semiscale Test S-02-6) has indicated large uncertainties in the calculations. The analysis methods should be revised and verified before they can be considered for NRC approval under the requirements of Paragraph 50.46 of 10 CFR Part 50.

   Recommendations

   (a) The analysis methods used by CE for small-break LOCA analysis for compliance with Appendix K to 10 CFR Part 50 should be revised, documented, and resubmitted for NRC approval. The revisions should account for comparisons with experimental data, including LOFT and Semiscale.

   (b) Plant-specific calculations, using the NRC approved model for small-break LOCAs as described in (a) above to show compliance with 10 CFR § 50.46 should be submitted for all CE-designed operating plants for NRC approval.

2. CE has performed a sufficient spectrum of small-break LOCA analyses to identify the anticipated system performance for breaks in this range. These analyses provide an adequate basis for developing improved operator guidelines, and demonstrate that proper operator action coupled with heat removal by the steam generators, high pressure injection (HPI) system, and/or the break assures adequate core cooling. The required operator action is to trip all of the reactor coolant pumps upon HPI system actuation on low pressure. This action is required because the CE calculations show that for a narrow range of small break sizes, 10 CFR §50.46 limits could be exceeded if the pumps are not tripped or the trip is delayed. According to CE estimates, at least 10 minutes are available for the operator to perform this action on a best-estimate basis and six minutes on a conservative basis.

   If, in addition to the small break LOCA, feedwater flow (both main feedwater and auxiliary feedwater) is lost, or, if for any reason natural circulation is not established, there will eventually (within 15-45 minutes) be no heat removal through the steam generators. In this case operator action is required to restore reactor feedwater flow or to open the PORVs and block valves (if closed). According to CE, in the case of a loss of feedwater flow, either action will serve to depressurize the primary system so that sufficient safety injection flow can be established. If natural circulation fails, the operator must also open

the PORVs. CE indicated that approximately one-half hour is available for the operators to re-initiate feedwater flow in order to prevent core uncovery. However, the PORVs must be opened within 10 minutes in the event feedwater is not restored in order to maintain the calculated consequences of the event within acceptable limits.

The staff recognizes that the time available for the operators to open the PORVs (10 minutes) in order to attempt to depressurize the system in the event of loss of feedwater is highly uncertain. This is due to the large uncertainty associated with two-phase flow through relief and safety valves. The importance of flow through relief and safety valves has been recognized in Section 2.1.2 of NUREG-0578[1] which requires that full scale prototypical tests be performed by July, 1981. Based on the previous discussion, the staff has concluded that a diverse decay heat removal path, independent of the steam generators, is desirable.

Recommendations

(a) Tripping of the reactor coolant pumps in the case of a LOCA is not an ideal solution. The licensees should consider other solutions to the small break LOCA problem, e.g., an increase in safety injection flow rate or partial pump operation. Until a better solution is found, the reactor coolant pumps should be tripped automatically in case of a small break LOCA. The signals designated to initiate the reactor coolant pump trip should be carefully selected in order to differentiate between a small break LOCA and other events which do not require reactor coolant pump trip. Acceptable criteria for manual tripping of pumps in the interim until automatic trips are installed is documented in Section 7.2.3 of NUREG-0623[5].

(b) The CE small break LOCA analyses relied on equipment which has not previously been considered part of the reactor protection system or of the engineered safety features. The equipment in this category includes that to provide reactor coolant pump trip, pressurizer spray valves, the PORVs, the pressurizer relief block valves, equipment used to automatically actuate the PORVs, and equipment used to remotely control the pressurizer spray and relief and block valves. The reliability and redundancy of these systems should be reviewed and upgraded, if needed, to comply with the requirements of Section 9 of NUREG-0585[6], regarding the interaction of non-safety and safety-grade systems. These systems should also be qualified for the post-LOCA environment.

(c) Plant simulators used for operator training should offer, as a minimum, the following small break LOCA scenarios:

- continuous depressurization
- pressure stabilized at a value close to secondary pressure

- repressurization
- stuck open pressurizer relief valve(s)
- stuck open letdown valve

Each of these cases should be simulated with reactor coolant pumps running and with the pumps not running. The first three events should be simulated for both cold and hot leg breaks. In addition to the usual single failures assumed in the ECCS and feedwater system, extended loss of feedwater (main and auxiliary) should be simulated in conjunction with these events.

3. A number of concerns related to decay heat removal following a very small break LOCA, and other related items, were identified in two draft reports by Mr. C. Michelson of TVA (see Section 4.1 of this Appendix). These concerns were identified for PWRs designed by Babcock & Wilcox and Combustion Engineering. CE has reviewed these concerns and provided an analysis of those concerns that relate to plants of their design. Postulated modes of two-phase flow natural circulation play an important role in the CE analysis. The CE analyses provide an adequate assessment of these concerns; however, sufficient experimental results, in particular integral system small break behavior and two phase natural circulation, are not available to completely support the analytical predictions. To this end, we have required CE, as well as the other PWR vendors to provide pretest predictions of small break tests (S-07-10B and L3-1) conducted in the Semiscale and LOFT facilities. In addition, Section 4.6.2 of NUREG-0623[5] requires each PWR vendor and fuel supplier to submit a pretest prediction of the forthcoming LOFT small break test (L3-6) in which the reactor coolant pumps will remain running throughout the test.

Recommendations:

(a) The various modes of two-phase flow natural circulation which are expected to play a significant role in plant response following a small break LOCA should be demonstrated experimentally.

(b) Appropriate means, including additional instrumentation if necessary, should be provided in the control room to facilitate checking whether natural circulation has been established.

4. The record of PORV failures for all PWRs (13 in approximately 200 reactor years) has demonstrated that PORV failures are a likely cause of a small break LOCA. The loss of load transients which most frequently occur will open the relief valves on CE plants unless an early reactor trip limits the pressure excursion to a value less than that of the PORV set point. Thus, the selection of reactor trip and relief valve setpoint has a strong effect on relief valve challenge rate.

The transient analysis provided by CE indicates that opening of the relief valves in the case of a feedwater transient is unlikely; however the relief valves will open for loss of load events which do not produce an anticipatory reactor trip.

Based on our review of operational data and analyses of anticipated transients, we have concluded that the failure of a PORV to close, subsequent to opening due to high pressure is likely cause of a small-break LOCA. One possible way to completely eliminate the risk associated with the failure of a PORV to close is to operate the plants with the block valves closed, as is done at the Palisades plant. This mode of operation, however, could result in an increase in the lift frequency of the safety valves. Since we have not been provided with information on the failure rate of safety valves, we could neither evaluate the desirability nor the acceptability of this mode of operation.

Recommendations:

(a) Licensees should provide a system which closes the block valve automatically whenever the reactor coolant system pressure decays to a preset value subsequent to a PORV opening. This system should include an override feature so that pressure relief could be accommodated at lower pressures, as necessary.

(b) Each licensee should perform a confirmatory test of the automatic block valve closure system installed in response to item (a), above.

(c) CE should prepare a report documenting the actions which have been taken to decrease the probability of a small-break LOCA caused by a stuck open PORV. The report should include an evaluation describing how the actions taken constitute a significant improvement in reactor safety.

(d) Any future failure of a PORV or a safety valve to close should be reported the NRC promptly. All future challenges of the PORVs and the safety valves should be documented in the annual report.

(e) The staff's implementation of the Lessons Learned Task Force long-term recommendations should pursue the interrelationship of safety and relief valves in its future study dedicated to safety and non-safety grade systems. Refer to Recommendation 9 of NUREG-0585[6]. This study should include an evaluation of the elimination of the PORV function. We expect this study to be part of the NRC TMI-2 Action Plans.

3. Expected Frequency of Small LOCAs

3.1 Introduction

This section provides an analysis of the expected probability of a small break LOCA resulting from failure of the PORV to close. The total expected frequency of a small break LOCA is the sum of the probability of the events consisting of piping ruptures and component failures including relief and safety valve failures, seal failures, and steam generator tube failures. The median frequency of small reactor coolant system ruptures based on pipe breaks is stated to be 10^{-3} per reactor year in WASH-1400[7] for breaks of between 1/2 and 2 inches equivalent diameter. The variation in this probability is from 10^{-2} to 10^{-4} per reactor year*. The probability of a small break LOCA per year from relief and safety valve failure was not given, however, the frequency of valve failure was stated to be 10^{-2} per challenge[8]. However, the NRC believes that the error bounds in WASH-1400 on accident probabilities were greatly understated.[9]

The accident at TMI-2 on March 28, 1979 was initiated by a loss of feedwater transient which caused a pressure increase in the primary system and the opening of the power-operated relief valve (PORV) at the top of the pressurizer. The failure of the PORV to reseat when the primary system was depressurized below the valve setpoint pressure produced the equivalent of a small break loss-of-coolant accident (LOCA).

The expected frequency of a stuck-open PORV has been evaluated by two methods; (1) operating experience, and (2) predictions of plant transient response. These evaluations are based on a summary of operational data provided to the NRC by the plant owners; analyses of anticipated transients discussed in CEN-114-P[3] and our evaluation of Combustion Engineering plant operating history contained in NUREG-0618[10].

3.2 Data From Operating Reactors

The record of PORV failures for all PWRs, 13 in approximately 200 reactor years, have demonstrated PORV failure to be a likely cause of small break LOCA. Ten PORV failures have occurred at B&W plants whereas one has been recorded for CE plants. This was at Palisades in September 1971. Since 1972 Palisades has operated with the PORVs isolated by the block valves. ANO-2 does not have PORVs. Other CE plants operate with PORVs which are supplied by Dresser Industries which also supplied the valve that failed at TMI-2. The PORVs at CE plants are of a similar design but generally larger than the PORV at TMI-2.

In discussions with the CE owners, an additional 39 instances of PORV openings were recorded from the approximately 30 reactor-years of CE operating plant history. This

*Steam generator tubes having diameters in the range of 3/4 inch to one inch, have failed several times in a number of ways. To a first approximation, the tube failure rate appears indistinguishable, perhaps higher, than that for a stuck-open, unisolated PORV.

includes Palisades which operates with the PORV blocked and ANO-2 which has no PORV. These instances are tabulated in Table 3.1 of this appendix.

We estimate that the probability of a small break LOCA brought about by a PORV failure to close is 10^{-2} per reactor year. This value was determined by evaluating the record of PORV failures to close in CE plants, the history of events which caused the PORV to open (see Table 3.1), and the expected valve failure rate per challenge given in WASH-1400. We do not believe that either the record of valve failures or the record of PORV openings is complete. Therefore, the calculated LOCA frequency from PORV failure of 10^{-2} per reactor year may be either too low or too high.

In future operation the rate of valve openings should be lower than that tabulated in Table 3-1, since nine of the events resulted from a turbine runback feature on the Millstone-2 plant which has been removed. For transient events which cause the PORVs to open, both valves will open since the actuation pressure, 2400 psig, is the same for both valves which is also the same as the reactor trip setpoint. For the five transient events and nine turbine runback events recorded by the CE owners, 28 PORV challenges occurred. Based on the available information on PORVs from past operation of CE plants, and as configured in the past, we conclude that the probability of a small LOCA from PORV failure may have been an order of magnitude higher than the median probability of a LOCA from pipe rupture.

In the draft guidelines contained in NUREG-0610[36] failure of a relief or safety valve to close is listed as an example of an unusual event for the purposes of determining licensee action. Unusual events are expected with a frequency of one or two per reactor year.

Some further consideration should be given to the role of the block valve in case of failure of the PORV to close, and the effect on a small break LOCA if the PORV opened, stuck open, and the block valve were closed. In most recorded cases of PORV failure to close, actions of the operator in closing the block valve limited the event. However, in the case of TMI-2, the operator failed to close the block valve for 138 minutes[11]. Following a PORV failure at Davis-Besse, the block valve was not closed for 21 minutes[12]. Plant operating procedures subsequent to TMI-2 have placed emphasis on closing the block valve in the event of a LOCA. Operators in plants with NSSSs designed by CE should respond promptly to indications of an opened PORV. For this reason, the likelihood of a stuck-open PORV and an open block valve resulting in a LOCA would be less than the probability of a PORV failure to automatically close, and should be less in the future than in the past.

Neither the position indicator nor the operator of the block valve is qualified for the environment, is safety grade, or is single failure proof. The PORVs are not tested under design conditions by the manufacturer. In NUREG-0578 the Lessons Learned Task Force recommends testing of both safety and relief valves and that emergency

power be supplied to the PORVs and block valves. Credit for the block valve performance in future safety analysis will be based on conformance with the recommendations of NUREG-0578 and the demonstration by the licensee that the valve can function in the predicted reactor building environment.

3.3 Evaluation of Anticipated Transients

Section 3.15 of CEN-114 discusses those anticipated transients which might cause the PORVs to open based on analyses performed for plant FSARs using the CESEC code. These analyses indicate that the PORVs will open for transients producing a sufficient mismatch of primary heat generation and secondary heat removal as indicated in Table 3.2 of this appendix.

The CESEC digital computer code is described in Topical Report CENPD-107[13]. The code was modified for analysis of anticipated transients without scram (ATWS) and was conditionally approved[14] by the NRC staff for ATWS calculations. CESEC is currently under review for analysis of other transients. The CESEC code is an analytical simulation of the primary and secondary system of a CE-designed pressurizer water reactor. Time-dependent neutron kinetics equations are solved for the fuel pins in conjunction with the solution of thermal-hydraulic equations for the reactor coolant system. Pressurizer sprays, heaters, PORVs, and safety valves are modeled in CESEC. The program can represent both primary system loops which can be either liquid or saturated two-phase. The program contains simplified steam generator and pressurizer models.

The analysis of anticipated transients of Table 3.2 which are in the plant FSARs use input designed to maximize primary system pressure and should be conservative for predicting those conditions for which the PORV will open.

From Table 3.1 and from examining CE plant operating history[10], loss of load transients which do not produce a turbine trip appear to be the most likely transients which might cause the PORV to open. Analyses indicate that the PORV will not open for feedwater transients at CE plants. Loss of load transients which produce a turbine trip will also produce an anticipatory reactor trip and will limit the increase in primary system pressure so that the PORV will not open. All operating CE plants have an anticipatory reactor trip on turbine trip with the exception of Arkansas Unit 2 which also has no PORVs. Loss of load transients produced by events other than turbine trip such as inadvertent closure of a turbine throttle valve appear to be the primary events for which the analyses show that the PORV will open. The frequency of these events is of the order of one per reactor year. Only a portion of these would approach the operational conditions and failures assumed in the FSAR analyses such that the PORV would open. If a failure rate of 10^{-2} per challenge is assumed for the PORV as suggested in WASH-1400, the probability of a small break LOCA produced by PORV failure may be of the order of 10^{-2} per reactor year which is consistent with the results obtained by examining the operational data discussed in the previous section.

3.4 Plant Modifications to Prevent PORV Challenges

Subsequent to TMI-2, the PORV pressure setpoint at B&W-designed operating plants was increased and the reactor trip pressure setpoint was decreased. Also, anticipatory reactor trips were installed for turbine trip and loss of feedwater. The old and new B&W set points as well as those of CE are given in Table 3-3. No incidents of PORV openings have occurred at B&W plants since these modifications were installed although 12 transient events which would have previously caused the PORV to open have been reported[15].

At B&W plants, the PORV is currently set at 2450 psig which is 50 psi below the safety valve setpoint. This setting is above the current CE reactor trip set point of 2400 psig. At a PORV setting of 2450 psi the number of spurious trips should not be significantly increased for CE plants, but the probability of a small break LOCA would be reduced.

One way to prevent PORVs from failing to close is to prevent them from opening by operating with the block valves closed. This may increase the possibility of safety valve actuation for loss of load transients without anticipatory trips which may increase or decrease the likelihood of a small break LOCA.

Opening of safety valves is not desirable since a failure of a safety valve to close inevitably results in a LOCA as there are no block valves available to close off the discharge line and repeated safety valve actuation would cause wear and decrease reliability. Opening of the safety valve might be eliminated, however, by providing an earlier reactor trip for those transients for which opening was calculated.

Actuation of the safety valve instead of the PORV would be preferable if the reliability of the PORV is found to be significantly less than that of safety valves. The licensees, so far, have failed to provide information on the observed failure rate of safety valves. Consequently, neither the desirability nor the acceptability of this mode of operation can be evaluated at this time.

CE plants, with the exceptions of Palisades and ANO-2, operate with two PORVs which are both set at the same pressure (2400 psi). If for any transient the reactor system pressure reaches this value, both valves will open. Some transients require the relieving capacity of only one valve so that if the pressure setpoints were staggered only one valve would open. This mode of operation would reduce the probability of a small LOCA by reducing the total number of valves which open from transients and hence the number of failures.

3.5 Conclusions and Recommendations

1. The record of PORV failures for all PWRs (13 in approximately 200 reactor years) has demonstrated that PORV failures are a likely cause of a small break LOCA. Ten PORV failures have occurred at B&W plants, two at Westinghouse plants, and

only one has been recorded for CE plants. We have no evidence that this record is complete, however. In attempting to judge the probability of LOCAs produced by PORV failure, we have evaluated data from the history of PORV openings at CE plants and the frequency of over-pressure transients at CE plants. We have also evaluated analytical predictions of PORV openings for these transients.

We have concluded that the probability of a small LOCA caused by the failure of a PORV to close at CE plants may be greater than the probability of a small LOCA produced by a pipe break.

One possible way to completely eliminate the risk associated with the failure of relief valves is to operate the plants with the block valves closed as is done at Palisades. This mode of operation, however, could result in some increase in the lift frequency of one safety valve. The licensees, so far, have failed to provide information on the observed failure rate of safety valves. Consequently, neither the desirability nor the acceptability of this mode of operation can be evaluated at this time.

Based on Lessons Learned Task Force recommendations, the staff has required that redundant emergency power be provided for PORVs and associated block valves in all PWRs so that valves can be opened and closed without the use of offsite power. By so doing, the valves can be used in the relief mode (i.e., both valves open) or the valves can both be closed to prevent a small-break LOCA due to a stuck open PORV under emergency conditions.

Based on Lessons Learned Task Force recommendations, the staff has required that all PWRs, including those designed by CE, be provided with either a direct indication of safety and relief valve position or with a reliable flow indicating device to positively identify open valve status. At present, most CE-designed plants are provided with relief valve position indicators, and most are installing a sonic device to detect flow through the valves.

Finally, in implementing the Lessons Learned Task Force recommendations, the staff has required that both safety and relief valves in PWRs be tested for functional performance capability. Some question arises because of the failure of the PORV to close at TMI-2 and at the Beznau plant as to whether these valves have sufficient relief capability and can sustain the loads imposed during accidents in which two-phase slug flow or single phase steam or water flow is relieved.

Based on our review, we recommend that, in order to improve PORV reliability still further, licensees should design and install a control system which provides interaction between the PORV and the block valve to prevent a small-break LOCA if the PORV were to fail to close. One such design would cause the block valve to close after the PORV opens when the PORV reset pressure is

reached and the reactor coolant system pressure has decayed to a lower value (i.e., the block valve would remain open until its lower setpoint was reached). This system would be provided with an override so that pressure relief could be accommodated at lower pressures, as necessary. Justification would be required to assure the staff that failure of this system would not decrease overall safety by acting to intensify plant transients and accidents.

Recommendations:

(a) Licenssees should provide a system which closes the block valve automatically whenever the reactor coolant system pressure decays to a preset value subsequent to a PORV opening. The system should include an override feature so that pressure relief could be accomodated at lower pressures, as necessary.

(b) Each licensee should perform a confirmatory test of the automatic block valve closure system installed in response to item (a) above.

(c) CE should prepare a report documenting the actions which have been taken to decrease the probability of a small-break LOCA caused by a stuck-open PORV. The report shall include an evaluation describing how the actions taken constitute a significant improvement in reactor safety.

(d) Any future failure of a PORV to close should be reported to the NRC promptly in conformance with the guidelines in NUREG-0610. All future challenges of the PORVs should be documented in the annual report.

(e) The staff's implemention of the Lessons Learned Task Force long-term recommendations should pursue the interrelationship of safety and relief valves in its future study dedicated to safety and non-safety grade systems. Refer to recommendation 9 of NUREG-0585[6]. This study should include an evaluation of the elimination of the PORV function. We expect this study to be part of the TMI-2 Action Plan.

Table 3.1

Recorded Instances of PORV Opening in CE Plants

Instrument or Technician Error	1
Intentional Opening for Test	2
Manual Opening (Surveillance or Venting non-Consensibles)	4 to 8
Turbine runback feature (has been removed from the Plant)	9 events 18 challenges
Loss of Power to Solenoid (Palisades)	1
Transient - Automatic Response	5 events 10 challenges
TOTAL	40

Table 3.2

Expected PORV Performance During Overpressure Transients

Turbine Trip	Anticipatory reactor trip prevents valve from opening
Loss of Main Feedwater	Opening Unlikely
Main Steam Isolation Valve	Opens
Turbine Throttle Closure	Opens
Loss of Offsite Power	Opening Unlikely
Rod Bank Withdrawal	Opens

Table 3.3

Typical Setpoints for Relief Valve, Safety Valves and Overpressure Trip

Setpoints (psia)	B&W Prior to 3/79	B&W Present	CE
Operating Pressure	2155	2155	2250
Relief Valve	2255	2450	2400
Overpressure Trip	2355	2300	2400
Safety Valve	2500	2500	2500

4. Expected Consequences of Small LOCAs

4.1 TVA Small Break Concerns

4.1.1 Background

In a meeting between Combustion Engineering (CE) and TVA on May 27-28, 1975, on emergency feedwater, TVA expressed concerns regarding a class of small break LOCAs whose depressurization rates are slower than those analyzed in the Combustion Engineering System-80 Standard Safety Analysis Report (CESSAR). The basis for the concerns was that for this class of very small break LOCAs, makeup rates from the high pressure injection pumps may be inadequate, leading to core uncovery with unacceptable peak cladding temperatures.

CE responded to the concerns identified at the May meeting in a letter dated September 18, 1975[16].

Subsequent to this letter, Mr. C. Michelson of TVA drafted a report[17] based on "an ongoing qualitative consideration of this concern..." in which a number of questions were expressed on decay heat removal during post small break LOCA recovery.

In a letter from TVA to CE on July 22, 1977[18], many of the questions raised in Michelson's report were transmitted to CE. CE responded to these questions on October 14, 1977, in a letter to TVA [19].

More recently, in a letter to the Babcock & Wilcox Company (B&W) dated April 26, 1978,[20] TVA documented concerns regarding the ability of B&W 205 fuel assembly plants to adequately remove decay heat during small break LOCA recovery. Of the six concerns identified for B&W 205-FA plants, two were specific to B&W designs, and four were generic to PWRs.

These four generic concerns and the concerns identified in the reference[17] report have been reviewed by the staff. We have also reviewed responses to some of these concerns provided in reference 19 as well as additional information submitted to the staff in reference 3. These reviews, and the conclusions which follow are considered applicable to CE plants in general.

4.1.2 Pressurizer Level as a Correct Indication of Water Level in the Core

A concern was expressed by TVA that during a small break, the loop seal in the pressurizer surge line would prevent the pressurizer from draining.

Pressurizer level behavior during a small break LOCA is dependent upon the location of the break. If the break is not in the pressurizer, then the indicated level is expected to provide a reasonably accurate measure of primary system inventory. This is because the pressurizer will remain the high pressure point in the system until the core fluid reaches saturation. While it is the high pressure point, negligible or no voids should form in the rest of the primary system. The mass lost out the break will cause the indicated pressure level to be lost (and therefore of no use to the operator) before there is any significant void buildup in the primary system.

For small breaks in the pressurizer vapor space, in particular, a stuck-open PORV or safety valve, pressurizer level will give the operator an erroneous indication of system coolant inventory. This is because the pressurizer becomes the primary system low pressure point. Significant voiding can now take place in the reactor vessel while the pressurizer instrumentation will indicate a high level because of the liquid surge into the pressurizer from the primary system. It was this phenomena which led the operators at TMI-2 to believe the primary system was full of water and caused them to shut off the HPI pumps.

The staff agrees that pressurizer level is not an accurate measure of system coolant inventory under small break LOCA conditions. It is our conclusion that pressurizer level by itself should not be used to automatically actuate or terminate ECCS. This was previously expressed in NRC Bulletin 79-05B, which specified HPI termination criteria acceptable to the staff.

In CE plants, pressurizer level has not been used to initiate any automatic safety actions. HPI is actuated on low system pressure. Staff-approved operator guidelines for HPI termination in CE-designed plants (except Maine Yankee) require HPI termination upon achieving a 50°F subcooling margin in the hot and cold legs of the primary system.

The staff considers that the present HPI actuation and termination methods and criteria are satisfactory and thereby resolve the TVA concern.

4.1.3 Small Break Isolation

The isolation of small breaks and subsequent repressurization of the reactor coolant system was expressed as a concern by TVA. This involved postulating a small break at a location that could be isolated by the operator (e.g., letdown line, PORV relief line) at some time after the break initiation (this was the situation that occurred at TMI-2, in which the stuck-open relief valve was isolated a few hours into the accident). The basis for this concern was that this event scenario had not been explicitly analyzed. In particular, break isolation without feedwater could cause repressurization and shut off the HPI flow.

CE has stated that the largest reactor coolant system penetrations which could be isolated following a small break loss-of-coolant accident are pipe connections with diameters of two inches (0.022 $ft.^2$) and smaller.* This includes the PORV and the letdown line.

For breaks which are isolated with secondary heat removal available, system pressure will equilibrate at a pressure slightly above the secondary pressure (such that the driving temperature differential from primary to secondary is sufficient to remove decay heat). If the primary pressure is below the secondary pressure when the break is isolated, repressurization to slightly above the secondary pressure will occur. Moreover, system inventory will increase since mass is no longer being lost from the system through the break.

CE presented an analysis of a 0.02 $ft.^2$ break which was assumed to be isolated 30 minutes into the accident. The results showed that at the time of isolation, the mixture height in the vessel stopped dropping and began to increase. The system pressure also increased slightly at the time of break isolation since the decay heat being removed by the break now had to be removed by the steam generator. CE also provided an analysis of a stuck-open PORV being isolated at 30 minutes after accident initiation. The results were very similar to the cold leg break analysis.

*The Maine Yankee plant has loop isolation valves. These are normally locked open during operation. Present guidelines instruct the operator not to attempt to isolate a break with them.

CE also identified two cases when isolating a small break is not considered beneficial. These are 1) isolating a break without secondary heat removal, and 2) isolating a break after the safety injection tanks have discharged and possibly introduced significant quantities of non-condensible nitrogen gas into the system.

In the event a break is isolated and secondary heat removal is not available, then system repressurization to the PORV or safety valve setpoint would occur.

Since almost all CE plants have low (approximately 1300 psi) shutoff head HPI pumps, this flow would be stopped, and unless action was taken to depressurize the primary system (i.e., operators manually open PORVs) the system would remain at the safety valve setpoint and continue to lose mass through the safety valve.

If a small break results in the safety injection tanks injecting to the extent the nitrogen cover gas is allowed to enter the primary system, and then the break is isolated, the gas could accumulate such that natural circulation and/or condensation heat transfer would be significantly degraded. The isolatable breaks (two inches or less) should not depressurize the system to allow gas to enter. Thus, only breaks that could be isolated with loop isolation valves are of concern. Isolation with loop isolation valves is precluded however, by emergency procedure requirements.

Break isolation either without secondary heat removal or with non-condensible gas in the system is not recommended, and emergency guidelines should instruct the operator to open the PORVs if the break is isolated.

Pressurizer Spray Line Break

CE did not analyze the case of a break in the pressurizer spray line since it is automatically isolated on low pressurizer pressure. However, the controller for this valve is not a safety grade system nor can this line be isolated if the isolation valve is postulated to fail. Since this scenario has not been analyzed, and because it would involve fluid discharge simultaneously from the pressurizer and cold leg, CE should provide an analysis of this break.

With the exception of the two cases mentioned above, the staff concludes that isolation of small breaks is beneficial and recommended when possible. CE should analyze the case of a pressurizer spray line break with the spray isolation valve failed open.

4.1.4 Break Enthalpy is Not Core Exit Enthalpy

The concern expressed by TVA is with regard to the possible bypassing of the core by injected HPI water, and the discharge of HPI water out of the break. If the break flow energy is not representative of the core exit energy, then less than the maximum percentage of the decay heat load would be removed by the break.

In the CE small break evaluation model, fluid enthalpy distribution and transport within the system are accounted for. In considering the possibility of injected HPI water bypassing the core and discharging out the break, the CE model assumes that none of the HPI fluid expected to be injected into the broken leg (for cold leg breaks) is injected. For cold leg breaks, the amount of HPI water injected into the cold legs of the intact loops that travels around the downcomer annulus and exits the broken loop break without entering the core is also accounted for.

Based on this concern, as well as previous vendor system pressure predictions for Semiscale test S-02-6, the staff is performing an ongoing evaluation of small break system behavior during ECC injection.

The scope of this evaluation includes both injection location modeling and system pressure behavior during injection.

It is expected that the adequacy of the present models will be determined by comparison to the Semiscale test S-07-10B and the LOFT small break test L3-1 (see Section 4.2.1.5).

It is the staff's conclusion that while the CE evaluation model accounts for the fluid enthalpy distribution and transport in the primary system, as well as injected HPI fluid bypassing the core, the overall adequacy of the predicted system behavior during ECC injection should be confirmed by comparison to experimental data.

4.1.5 Recirculation Mode of HPI (High Pressure Safety Injection) Operation at High Pressures not an Established Design Requirement; also, Minimum Flow Protection for HPI Pumps During the Recirculating Mode of Operation

The first part of this concern was based on the fact that for most CE plants, the HPI pumps have a shutoff head of about 1300 psi. If decay heat removal could not be accomplished due to disruption of natural circulation, the system would repressurize. If the system then remained at high pressure for an extended period, the recirculation mode for HPI operation would eventually be activated. TVA's concern was the availability of an HPI system designed to operate in the recirculation mode with the reactor at high pressure, and the evaluation of such operation for feasibility.

The second part of the concern was regarding minimum flow protection for the HPI pumps.

The high pressure injection pumps have a minimum flow requirement (about 30 gpm) to insure adequate pump cooling and preclude damage. During the injection phase of a small break LOCA, the HPI pumps take suction from the refueling water storage tank. Minimum flow is assured by a "miniflow" line from the pump discharge back to the refueling water storage tank. Once the refueling water storage tank is sufficiently depleted, the HPI pump is switched over to take suction from the containment sump. This is called the recirculation mode.

When in this mode of operation, there is no minimum flow protection for the HPI pumps in the event the system pressure rises above that pressure which allows minimum flow in the pump.

Although for expected small break LOCA conditions, pump flow is calculated to be sufficiently above the minimum flow value, under certain conditions (e.g., an isolated break) the system pressure could rise back up above the pressure needed for minimum flow protection.

CE has stated that it is an operational requirement for the HPI pumps to operate in the recirculation mode following a LOCA. Moreover, approved emergency guidelines provide specific guidance to the operators on pump operation to preclude deadheading the pumps. This includes throttling or stopping charging flow. This is necessary because the HPI pumps take suction from the containment sump during the recirculation mode of operation and do not have minimum flow protection against deadheading.

In the event secondary heat removal is lost and the system repressurizes, the HPI pumps would eventually deadhead and no longer supply ECC water to the system. Operator action would be necessary to manually depressurize the system in order to restore HPI.

The staff concludes that the CE emergency operator guidelines for small breaks provide the necessary protection for the HPI pumps to prevent deadheading in the recirculation mode of operation. Specific plant operating procedures should include these requirements.

4.1.6 Use of HPI Pumps With Shutdown Cooling System

The long-term cooling after recovery from the small break LOCA is performed by the shutdown cooling system (SCS). This system removes primary coolant, cools it, then returns it to the primary system. Inventory in the primary system during this period would be monitored with pressurizer level indication and must still be maintained by the HPI pumps.* Michelson expressed a concern regarding the simultaneous use of these two systems "since it involves some common piping including a common return pipe." Moreover, he was also concerned that "this mode of operation has not been a design requirement".

CE pointed out that the simultaneous operation of the HPI and SCS is a design requirement. They cited reference 21 as the document in which this mode of operation is described.

*This requirement assumes the charging pumps are not available.

Of importance is the fact that although both the high head safety injection pumps and the low head shutdown cooling pumps share common piping, they do not share it under specific conditions for which the system is designed.

Briefly, there are three modes of post accident cooling identified by CE. These are: 1) the initial recirculation mode, 2) the simultaneous injection mode, and 3) the shutdown cooling mode.

During the initial recirculation mode, the high pressure safety injection pumps are taking suction from the containment sump. After injection by both the high pressure safety injection and low pressure safety injection (shutdown cooling) pumps in which both take suction from the refueling water tank has been completed, the lower pressure pumps are secured.

During the simultaneous injection mode, the high pressure safety injection pumps are taking suction from the sump and injecting simultaneously into the hot and cold legs (to prevent Boron precipitation). Again, the low pressure pumps are secured and not in use.

Finally, the shutdown mode of operation utilizes both the high and low pressure safety injection pumps. The high head pumps take suction from the containment sump, whereas, the low pressure pumps take suction from the hot leg. Valves connecting the low pressure pump inlets to the containment sump have been closed.

The staff has spot-checked the emergency procedures for for LOCAs for three operating plants, St. Lucie Unit No. 1, Fort Calhoun Unit No. 1, and Calvert Cliffs, to assure that the low pressure safety injection pumps are not to be operated simultaneously with the high pressure pumps while both are taking suction from the containment pump.

For all three plants, these procedures described the necessary actions documented in reference 21 to assure simultaneous operation of HPI and SCS pumps with the same suction source is precluded.

The staff has concluded that the use of common piping for both the low and high pressure injection systems has been adequately accounted for in the design, and that emergency procedures provide operator instructions such that simultaneous operation of the high and low head pumps in an unacceptable manner is precluded.

4.1.7 Initiation of Containment Spray

In the event of a very small break, TVA was concerned that a low pressurizer level would appear early in the accident and initiate containment isolation. Subsequent high containment pressure would then initiate containment spray. In particular, a prolonged isolation due to delay in cooldown would increase the likelihood of initiating containment spray.

Pump restart criteria and requirements have not yet been identified and their ability to be restarted is dependent, in part, upon the post-LOCA environment. Moreover, the staff has identified other equipment inside of containment, presently not designed to perform in the post-LOCA environment, but nevertheless relied upon and its proper operation taken credit for during small break LOCAs. This includes such items as the pressurizer spray valve, PORV, etc. The capability of all of the necessary systems and components to operate as expected in the post-LOCA environment in order to mitigate the consequences of small break LOCAs has not been presented by CE. The staff requires that those systems and components taken credit for in small break LOCA analyses be shown to be able to operate in the post-LOCA environment. This needs to be performed by CE before a conclusion is reached that the NSSS will perform as predicted for small break LOCAs including the effects of containment spray initiation.

4.1.8 Reactor Vessel Coolant Level Unknown to Operators/Adequacy of Emergency Operating Procedures

During the course of a small break LOCA, the mode of decay heat removal will switch from single phase liquid natural circulation to pool boiling/condensation and then back to solid liquid natural circulation. As is discussed in Section 4.1.11, the system hydraulic behavior could become erratic during the transitioning due to slug flow, etc. and the operators could observe fluctuations in system pressure and vibration, to name a few possible symptoms. TVA's concern was that during this period of potentially unstable system hydraulic behavior, the operators would not have vessel level indication, and without clear emergency procedures to guide them, could take the wrong or inappropriate actions.

CE has responded to this concern by pointing out that operator action required during a small break LOCA is dependent only on the time after LOCA and on pressurizer pressure, and not on knowledge of vessel water level or coolant flow regime.

The staff agrees that system behavior could become erratic during this period. This does not pose a problem, however, provided that the potential erratic behavior does not precipitate incorrect operator actions. In particular, the operator should not terminate or degrade safety injection or otherwise jeopardize the normal sequence of actions of plant safety features. In addition to the above, the staff has required[1] for licensees to evaluate the need for additional instrumentation and controls to give "...an unambiguous, easy to interpret indication of inadequate core cooling."

It is our conclusion that these precautions have been properly incorporated in CE's emergency guidelines, and with proper implementation of these guidelines into individual plant procedures, wrong or inappropriate operator action will not be precipitated.

4.1.9 Long-Term Source of Auxiliary Feedwater

The assurance of "a continuous long-term source of clean auxiliary feedwater for the steam generators...," was raised by TVA as a potential concern if the recovery should be delayed pending additional fuel cooldown.

Table 4.1-1 lists the sources of auxiliary feedwater for each of the CE plants. With the exception of Maine Yankee and Calvert Cliffs, Units 1 and 2, each plant can ultimately rely on an infinite source of water.

The staff is studying auxiliary feedwater reliability for CE plants. If it is shown that an unlimited or larger source of feedwater is desirable for Maine Yankee and/or Calvert Cliffs, then appropriate modifications will be required.

Based on the above, the staff considers the TVA concern resolved.

4.1.10 Pressure Boundary Damage Due to Bubble Collapse

The TVA letter discussed the possibility of damage to system components due to water-hammer effects from condensing steam. In particular, the TVA concern focused on injection of cool HPI water into a steam-filled cold leg pipe, as well as the bubbling of steam through subcooled liquid.

4.1.10.1 Steam Bubbles in Subcooled Liquid

While CE's analyses focused on the more severe condition of cold water injecting into a steam-filled pipe, they stated that in all experimental facilities used to study ECCS performance, no damage to the pressure boundary has been caused by condensation-induced pressure waves.

The staff recognizes the possibility of steam bubbles collapsing in a subcooled liquid during a small break LOCA primarily because computer models presently used to calculate small break behavior do not account for non-equilibrium conditions. If the bubbling of saturated steam through subcooled water did occur, pressure pulses would be non-directional, and a system containing steam bubbles would be hydraulically "soft," and would attenuate pressure pulses prior to contact with structural boundaries. It is expected that these loadings would be bounded by the more severe case of cold water injection into steam discussed in Section 4.1.10.2 below. It is the staff's judgement that the loading caused by steam bubbles will not exceed those associated with the large break LOCA, for which the system is designed.

4.1.10.2 Cold Water Injection into a Steam-Filled Pipe

CE has estimated the loads which would result from the injection of cold water into a steam filled pipe. They performed computer analyses using a model described as

TABLE 4.1-1

SOURCES OF AUXILIARY FEEDWATER FOR COMBUSTION ENGINEERING OPERATING PLANTS

	MAINE YANKEE	CALVERT CLIFFS (1 & 2)	ANO-2	FORT CALHOUN 1	MILLSTONE 2	PALISADES	ST. LUCIE
Condenser Hotwell				10^5 gal.			
Condensate Storate		$7x10^5$ gal. Available Per Unit	$1.9x10^5$ gal.	$1.5x10^5$ gal.	$1.5x10^5$ gal.	$6x10^4$ gal. gal.	$1.16x10^5$ gal.
Demineralized Water	$1.5x10^5$ gal.	$3.5x10^5$ gal.		$1x10^5$ gal.			
Emergency Feedwater Storage Tank				$5.5x10^4$ gal.			
Primary Water Storage	$1.61x10^5$ gal.				$1.5x10^5$ gal.		
Primary Makeup Tank					$7.5x10^4$ gal.		
Pretreated Water storage Tanks		$1x10^6$ gal. Total					
Well Water		30 days supply					
Fire Protection System	$3x10^6$ gal.			unlimited	10^6 gal.	From Lake (unlimited)	
Public Water					Unlimited		$6x10^5$ gal. in tanks & 10^3 gpm indefi nitely

TABLE 4.1-1 (Contd.)

	MAINE YANKEE	CALVERT CLIFFS (1 & 2)	ANO-2	FORT CALHOUN 1	MILLSTONE 2	PALISADES	ST. LUCIE
Steam Generator Blowdown Monitor Tank							$2x10^5$ gal.
Service Water System			Lake (infinite)				
Primary Water Treatment Plant	$3x10^6$ gal.						

similar to the Creare model,[22] in which 60°F water was injected into a steam-filled pipe. Cases were run at 300 psia and at 1000 psia with either one or two HPI pumps running. These analyses produced water slug oscillations, but the pressure behind the slug was about ± 50 psi and concluded to be less than the operating pressure. No assessment of the inertial loads from the water slug was made.

Two sources of experimental data were examined by EG&G, Idaho. The result of the review of the data from the Semiscale and LOFT test facilities was that fluid oscillation could occur and that the pressure oscillations are "small (less than 10 psi) to non-existent"[23].

The staff has also reviewed the generic evaluation of PWR steam generator water hammer[24] with respect to the concern of steam condensation in the primary system of a PWR. A 1/10 scale test model of a feedwater system was employed. Overpressures of 700 psi and 1300 psi, respectively, were recorded in experiments with initial system pressures of 16 psi and 75 psig for the feedwater sparger geometry.

Empirical curves were developed to delineate the threshold flow (cold water injection) for slug formation as a function of system pressure, water temperature, and geometry using 1/4 scale test model. The effects of non-condensible gas content were also studied.

For the situation most representative of the primary cold leg piping, an open-ended pipe, water hammer events with overpressures of 150-200 psi were recorded.

Experimental data covering a wide range of scales and test geometries indicate that overpressure events resulting from steam condensation can result in pressure oscillations from a few psi to 1300 psi. For conditions approximating those of a PWR cold leg pipe, the overpressures are low, a few psi to several hundred psi. This range is covered by the design basis analyses of a large pipe break.

Of significant concern during the injection of cold water into steam is the potential for "slugging," in which the liquid flow entering the pipe is sufficient to fill the cross-sectional area of the pipe. Condensing steam on the surfaces of this water slug set up the pressure gradients necessary to initiate oscillations of the slug in the pipe.

This oscillating liquid slug not only gives rise to pressure oscillations as observed in the tests, but can also produce intertial loads at pipe bends, and impact loads if it impacts on surfaces such as a core barrel.

Calculational models designed to predict these pressure oscillations due to water slugs indicate that the amplitude of pressure oscillations should not increase as the pipe diameter increases as long as all other factors, such as system pressure, length-to-diameter ratio, etc. do not change. Moreover, the amplitude of these pressure oscillations is predicted to increase as system pressure increases.

The previous discussion applies to cases when the pipe is filled with a water slug. If the cold water injection flow is insufficient to produce a water slug that fills the cross-sectional area of the pipe, then the above phenomenon is not expected to occur.

The loads associated with the inertial impact of a liquid slug are not considered as part of the design basis analyses typically performed. Simple analytical techniques result in conservative estimates of the slug velocity for the expected condition of up to a few hundred feet per second.

Based on the following discussion, it is the staff's judgment that the pressure oscillations are accommodated in the structural design. However, the staff requires that CE provide confirmatory information that HPI and accumulator flows during small breaks will not result in the formation of water slugs, or if they do, to show that the structural design bases of the primary system include loads due to:

(1) Water slug inertial motion
(2) Water slug impact
(3) Pressure oscillations due to steam condensation.

Any test data cited must be shown to be applicable to the actual system design. The staff intends to pursue this issue, in detail, as part of the generic safety review of water hammer in nuclear power plants, Task Action Plan A-1[25].

4.1.11 Mechanical Effects of Slug Flow on Tubes

Once the HPSI begins to add mass to the system at a rate greater than that of the break flow from the system, the system inventory will increase. TVA termed this the recovery period[6]. If the liquid level had dropped below the hot leg outlets, decay heat removal via pool boiling/steam condensation would have been established. As the vessel level increases during the recovery period, the hot legs would become blocked with liquid, disrupting steam flow from the core to the steam generator. Vapor generated in the core would accumulate in the vessel upper plenum and upper head with a subsequent rise in pressure. This pressure rise would force the vessel liquid level down until a venting path for the steam from the vessel to the steam generator was established. TVA's concern was that this condition would produce slug flow in the hot leg pipe resulting in mechanical loadings on the steam generator tubes.

In response to this concern, CE stated that they did not believe slug flow would occur during the transition periods. However, in order to analyze the possible effects of slug flow, they postulated a slug of water entering the steam generator plenum at a velocity of 35 feet/second. This velocity is derived from the approximate pressurization rate of 2.5 psi/sec when it is assumed that all of the steam generated in the core enters the upper plenum-upper head region.

It was then assumed that this water slug impacted the divider plate of the steam generator inlet plenum. The load imparted across the plate was calculated to be approximately 12 psi. Since the maximum load across the plate during a large break LOCA at the pump suction is about 900 psi, CE concluded that the loads due to potential slug flow were much less than the design basis.

The staff concurs in this conclusion that the loads would be much less than those resulting from the large break LOCA. This analysis and conclusion satisfactorily resolves the TVA concern.

4.1.12 Effect of Safety Injection Tank Discharge/Non-Condensible Gas Accumulation in the System

The concern expressed by TVA is that the effect of the safety injection tank discharging into the system once the pressure drops below the actuation setpoint has not been evaluated. Since these tanks are pressurized with nitrogen gas, there is the possibility of injecting this gas into the system. Introduction of non-condensible gas into the primary system has the potential to disrupt natural circulation and reduce steam generator condensation heat transfer. Almost all operating CE plants have safety injection tanks with 200 psi actuation setpoints. Only one plant, ANO-1 has a 600 psi setpoint.

CE has responded to this concern by stating that for breaks 0.02 $ft.^2$ and smaller, the safety injection tanks are not calculated to inject. Therefore, none of the nitrogen used to pressurize the safety injection tanks is calculated to enter the system. CE analyses also show that for breaks greater than 0.02 $ft.^2$, the break alone is calculated to remove the decay heat such that the steam generators are not required for decay heat removal. Thus, for any breaks greater than 0.1 $ft.^2$, in which safety injection tank discharge is calculated to occur, disruption of natural circulation and reduction in steam generator heat transfer by non-condensible gases (if they somehow were to enter the system) are not of concern since the steam generators are not required for decay heat removal.

For those small breaks which do not depressurize to the safety injection tank setpoint, plant recovery and long-term cooldown procedures should instruct the operator to isolate the accumulators before depressurizing below the accumulator setpoint pressure to preclude accidental injection. The staff-approved guidelines for small breaks for CE plants require this.

In Section 4.2.1.4 of this appendix, a more complete discussion is provided on sources and effects of non-condensible gases in the primary system.

The staff concludes that for small break LOCAs which depressurize the primary system such that safety injection tank gas, either dissolved or free, can enter the system, then the steam generators are a heat source to the primary system and are not relied

upon for decay heat removal. For breaks which rely upon the steam generators for decay heat removal, the primary pressure never drops below the secondary side pressure and the safety injection tanks would not be calculated to inject.

4.1.13 Pump and/or Pump Seal Damage/Continuous Operation of Pumps

The concerns expressed by TVA regarding pump and/or pump seal damage and continued operation are that continued operation during depressurization could cause pump cavitation, and associated vibration could lead to mechanical damage of the pump itself or the pump seals.

Moreover, if offsite power is assumed to be lost, TVA was concerned that failure to either restore offsite power, or to load the chemical volume control system on the diesel generators could also result in pump seal failure.

4.1.13.1 Pump Seal Damage

CE has stated that the additional leakage area that could occur due to pump seal damage is approximately 2×10^5 ft.^{2} In the event of seal leakage during a small break, they stated it would appear as a slightly larger break and therefore be bounded by present FSAR analyses.

Because no supporting analyses have been presented to confirm either this break size or that it is boundary by FSAR analyses, the staff cannot reach the same conclusion as CE at this time. We require that CE provide an analysis assuming the worst failure of the pump seals in conjunction with a small break occurring at the worst location to confirm their conclusions, or demonstrate why seal failure concurrent with a small break should not be considered as an accident scenario.

4.1.13.2 Continuous Operation of Pumps

It has recently been determined that the delayed tripping of the reactor coolant pumps during a small break LOCA can lead to predicted cladding temperatures in excess of regulatory limits. Present staff requirements are that tripping of all of the coolant pumps early in a small break accident is necessary. A more complete discussion of this is found in Section 4.2.2.6 of this appendix, and in reference 5.

4.1.14 Conclusions

Staff conclusions on the preceeding TVA small break concerns are as follows:

1. Pressurizer level is a valid indication of system inventory only when it can be demonstrated that no voids exist in the primary coolant.

2. Safe recovery from small breaks can most reliably be achieved by isolating small breaks, if possible. Two exception to this however, are when no feedwater is available as loop isolation valves could be closed.

3. If feedwater is not available, whether or not a break is isolated, operator action is necessary to manually open the PORVs and attempt to depressurize the system such that adequate HPI can be initiated.

4. Adequate supply of auxiliary feedwater exists in the event of a delayed recovery from a small break. (See Appendix X).

5. The CE evaluation of non-condensible gas effects is acceptable, but some confirmatory information will be needed. (See Section 4.2.1.4).

6. The small break models have not been adequately compared against integral systems tests and such comparisons are necessary.

4.1.15 Recommendations

Recommendations based on the staff review of CE's consideration of the TVA concerns and the conclusions reached above are as follows:

1. Emergency procedures are required to instruct operators of the possible need to open the PORVs in the event that feedwater is not available when a break is isolated.

2. An analysis of a break in the pressurizer spray line in which the isolation valve is assumed to fail open should be performed.

3. Emergency procedures for small breaks should instruct operators that loop isolation valves should not be used to isolate breaks.*

4. Information is required to confirm that HPI and safety injection tank flows during small breaks are insufficient to form water slugs, or if they do, to show that the structural design bases of the primary system include loads due to:

   (a) water slug inertial motion

   (b) water slug impact

   (c) pressure oscillations due to steam condensation

5. Small break emergency procedures should instruct the operators of the need to isolate the safety injection tanks during recovery from a small break in accordance with the approved guidelines.

*At present, this is only applicable to the Maine Yankee plant which has loop isolation valves.

6. Analyses are required assuming the worst failure of the pump seals in conjunction with a small break in the most limiting location, or additional justification is necessary if pump seal failure can be precluded.

7. All equipment relied upon to either operate or not fail during a small break LOCA should be shown it can do so in the post-LOCA environment.

8. Additional analyses are to be provided on the effect of spray isolation valve failure on small break LOCAs, and that non-equilibrium effects in the pressurizer be properly considered if they are important to the results.

4.2 Small Break LOCA Analysis

4.2.1 Analytical Model

4.2.1.1 Analytical Methods

CE has performed a series of small break calculations using the NRC approved small break evaluation model. This model is described in CENPD-133[26] and CENPD-138[27] and is normally used to perform small break LOCA analyses for postulated break areas up to 0.5 square feet. The current calculations have focused on the very small break spectrum and include consideration of breaks in the pressurizer vapor space.

These calculations are beyond the scope normally considered in small break analyses, and the staff had a number of concerns about the applicability of the current models. The staff concerns were as follows:

(1) Following postulated small break LOCAs, a primary mechanism for heat removal is natural circulation. The staff concerns in this area are the ability of the computer programs to correctly predict the various modes of natural circulation and the interruption of natural circulation if it occurs. The staff notes that experimental data for the verification of methods for two phase natural circulation are currently not available.

(2) The experimental verification of small break analysis methods with systems data is currently limited. The available small break data from the Semiscale facility (S-02-6), although containing a number of deficiencies, is the best information now available. The analytical methods used to predict the results of this test did not correctly predict the overall system depressurization rate, and the depressurization rate following safety tank injection. These are significant parameters in that they affect the safety injection rate. Improved data from the Semiscale (S-07-10B) and LOFT (L3-1) facilities are now available for model verification.

(3) The appropriateness of the pressurizer model for analyses of small breaks at various locations was a potential concern. It was noted that the equilibrium pressurizer model assumed in the vendor analyses gives somewhat different results

from hand calculations assuming non-equilibrium conditions. These modeling differences may be significant for various postulated breaks. Also, the representation of potential flooding in the surge line could affect the draining of the pressurizer. A flooding check is not made for the surge line in the computer programs. Thus, potential pressurizer draining was a concern in these analyses.

(4) The calculation of core level and core heat transfer are important features of the small break model. Limited experimental data is currently available to justify these models. Although the current comparisons are satisfactory, the data are not challenging to the codes. It is anticipated that more data will be obtained for further code verification.

(5) The number of nodes used to represent the primary system for small break LOCA analyses should be sufficiently detailed to model the flashing of hot fluid in various locations. This modeling detail is necessary since the calculated system pressure during the decompression process is controlled by the flashing of the hottest fluid existing at any time in the model. The assumption of thermal equilibrium requires that the fluid combined in a single node be represented at the average fluid properties. If fluid from several regions are combined in one node, the calculated system pressure during a portion of the transient may be lower than could occur if the smaller regions of hot fluid flashed and maintained the system at the corresponding saturation pressure. Thus, the modeling detail could have a significant effect on the calculated times for various events such as ECCS actuation.

(6) During the recovery period of a small break LOCA, the thermodynamic equilibrium assumed in fluid control volumes could result in errors in the predicted system pressure. This could, in turn, introduce errors in both the break discharge and safety injection flow. The specific concern involves the rate at which the water which is refilling the system can condense steam. If the condensation efficiency is less than 100 percent, then system pressure would be higher than that predicted.

(7) The discharge rate of two-phase fluid through the relief and safety valves is an important consideration for some transients. These include postulated stuck open relief or safety valves, and primary system depressurization for very small or zero break LOCAs by opening the relief valves if all feedwater is assumed lost. There is a lack of discharge rate data for two phase fluid at high pressure; most experimental data is for steam at low pressure[28]. If the actual valve flow is lower than assumed in the calculations, primary system depressurization to the high pressure injection set point might not occur within the calculated times.

To address the above concerns regarding the small break LOCA model, CE has performed additional noding studies and evaluations to justify various aspects of the model.

This additional information was discussed with the staff at a meeting on July 2, 1979, and subsequently documented in CEN-114-P[3]. These topics are discussed in the following sections.

4.2.1.2 Pressurizer and Surge Line Model

In the TMI-2 accident, the pressurizer behavior played a key role in influencing the operator actions. In particular, the in-surge of fluid to the pressurizer led to incorrect operator diagnosis of system inventory. Because of this, the staff has concluded that it was appropriate to reexamine the analytical modeling of the pressurizer to determine if predicted behavior for other similar accidents would represent realistic behavior and if it could be used by the operators for accident diagnostics.

In particular, the staff concerns focused on pressurizer and surge line modeling.

4.2.1.2.1 Surge Line Model

The present CE small break evaluation model does not account for counter-current flow in the surge line should conditions predict its occurrence. For breaks in the pressurizer, this is of importance because failure to account for counter-current flow would not allow pressurizer draining and hence lead to incorrectly predicted level behavior.

CE addressed this concern by demonstrating that the surge line flow rate for a leaking (leak area=0.00754 $ft.^2$) PORV was always greater than the minimum flow rate needed to prevent counter-current flow. Their analyses showed that the surge line flow rate was almost always a factor of three to four higher than the flooding limit*.

Based on this analysis, the staff concludes that a counter-current flow model in the pressurizer surge line is not necessary for PORV leaks.

4.2.1.2.2 Pressurizer Model

Within a fluid volume, thermodynamic equilibrium is assumed for all of the vendor ECCS evaluation models.

Our concern was that if significant temperature gradients existed in the pressurizer liquid space, they could strongly affect the energy transfer rates between the steam and the liquid. In particular, it was considered that these temperature gradients could be established during surges of a cooler liquid into the pressurizer. If the nodalization was too simplified, temperature gradients would not be established and the effects masked.

*The floording limit is the minimum steam flow rate above which counter-current flow cannot occur.

During in-flow due to a leak in the pressurizer, the pressure is dropping and turbulence induced by the inflow, as well as the liquid flashing, is expected to provide sufficient mixing for the equilibrium assumption to be valid.

During recovery from a small break however, the in-surge to the pressurizer would be subcooled water and the system pressure would not be dropping. If the surface of the rising liquid layer in contact with the steam became saturated, it would effectively insulate the steam from the cooler liquid below the saturated layer. Thus, a model which assumed the liquid and steam to be in thermodynamic equilibrium would not accurately represent this situation.

To address this concern, CE provided a bounding evaluation of a typical small break in which the incoming liquid was assumed to behave as a piston, compressing the steam but not allowing energy transfer to condense steam. The results showed that for an equilibrium model, the the pressurizer refilled to 34 percent of full whereas for the piston model, the pressurizer refilled to only seven percent of full. It was expected that the actual refill level would be somewhere between these two bounds.

While this effect was significant with respect to the refill level of the pressurizer, it does not affect the core cooling, since pressurizer filling occurs after the core has recovered. Moreover, it does not pose any problem for those plants with low head HPI pumps since the staff-approved HPI termination criteria is based on establishing a subcooling margin of 50°F. However, the Maine Yankee plant has HPI pumps which can repressurize the primary system to above the PORV set point. For this plant, CE has stated that the 50°F subcooling criteria will be met before the PORVs would open and no reliance on pressurizer level is called for in the emergency guidelines. The staff has requested that confirmatory analyses be submitted to support this position.

4.2.1.2.3 Conclusions

We have reviewed the effects of surge line and pressurizer modeling assumptions in the CE evaluation model. It is our conclusion that the present models are acceptable for the purpose of performing small break LOCA analyses to develop improved guidelines for the training of reactor operators. However, in order to demonstrate compliance with Appendix K to 10 CFR 50, additional justification for the equilibrium assumption will be necessary.

For the Maine Yankee plant, the HPI termination criteria does not rely on pressurizer level. However, the staff has requested confirmatory analyses to be submitted. If these analyses show that non-equilibrium processes can affect the HPI termination criteria, appropriate corrective action will be taken.

4.2.1.3 Steam Generator Model

Modeling of the U-tube steam generators in CE's approved small break evaluation model consists of a three volume representation for each steam generator. Two volumes are used to represent the primary side coolant, one volume represents the hot side and the other volume the cold side of the tubes, and the third volume is used to represent the secondary side. Heat transfer on the primary side is modeled to consider four possible regimes of coolant flow, namely; subcooled forced convection, two-phase co-current flow with condensation, two-phase counter-current flow with condensation and drainage, and steam flow with condensation. The volume of the secondary side fluid determined on the basis of a phase separation model is used to determine the secondary side heat transfer area. Heat transfer to steam on the secondary side is ignored for conservatism this omission will provide conservatism in the computed primary side pressure when heat flow is from primary to secondary. However, it will result in non-conservative predictions of primary side steam binding when reverse heat flow conditions exist.

Control of the heat transfer regime on the primary side during the various stages of a blowdown transient is determined by primary fluid conditions at the junction between the two primary side volumes, or effectively in the bends in the U-tubes. Comparison of results using steam generator inlet conditions to control primary side heat transfer resulted in slightly higher (less than 10%) heat transfer rates than using conditions in the tube bend. Conservative assumptions were also used in the CE heat transfer correlations for two-phase flow, particularly at low flow rates where the CE heat transfer model will predict heat transfer coefficients of one-half, or less, of the applicable heat transfer correlation. Auxiliary feedwater flow control to the steam generator secondary functions to maintain the secondary side two-phase mixture level within a specified control dead-band by on-off flow control.

For breaks smaller than 0.02 $ft.^2$ in area, the two steam generator models used for the plant simulation were combined into a single composite steam generator unit due to primary system symmetry.

Sensitivity studies on primary and secondary nodal detail or heat transfer correlation assumptions were not performed so that the adequacy of the three node steam generator models for break transient simulation has not been fully assessed. The kind and degree of conservatism introduced in primary system parameters, such as primary pressure and reactor vessel mixture level, resulting from the steam generator heat transfer conservatisms have also not been assessed. However, it is believed that the heat transfer conservatisms should result in conservatively higher primary system pressure during small break blowdown while primary side pressure is higher than secondary side pressure with consequently greater inventory loss and lower reactor vessel inventory when the ECCS actuation pressure is reached.

At present, the degree of conservatism in the CE steam generator model is unknown, and experimental verification of the the heat transfer correlations used in the steam generator model is needed to quantify, in part, the conservatism of the model. The adequacy of the nodal representation for small break transients also requires verification for the proper application of heat transfer correlations. The slow depressurization transients resulting from small breaks inherently require accurate plant heat/mass source and heat/mass loss models to adequately determine system response, so that steam generator modeling uncertainties will strongly influence predicted response characteristics to be used for system design and operator guidelines. As a result, these uncertainties must be minimized or clearly identified for proper plant operation, particularly during accidents.

4.2.1.4 Non-Condensible Gases

In the event of a small break LOCA, non-condensible gases can be introduced into the primary system from a number of sources. These non-condensible gases can affect the system behavior in a number of ways. Condensation heat transfer in the steam generators can be degraded, non-condensible gas accumulation in system high points can degrade or potentially stop natural circulation flow, and significant amounts of non-condensible gas could introduce errors in analysis models based on equilibrium assumptions.

In reference 3, CE has provided an evaluation of the effect of non-condensible gases on a small break loss-of-coolant accident. The staff review of this evaluation and conclusions are provided in the following sections.

4.2.1.4.1 Sources of Non-Condensible Gas

In a PWR, there are nine sources of non-condensible gas which could potentially be introduced into the primary system. These are:

(1) Dissolved hydrogen in the primary coolant;

(2) Dissolved nitrogen in the safety injection tank water;

(3) Dissolved air in the refueling water storage tank;

(4) Hydrogen released from zirconium-water reaction;

(5) Free nitrogen used to pressurize accumulators;

(6) Hydrogen released from radiolytic decomposition of injected water;

(7) Fission and fill gas in reactor fuel.

(8) H_2 gas (free and dissolved) in makeup tank*

(9) Pressurizer steam space gas.

With the exception of the source due to radiolytic decomposition, CE has accounted for each of these sources in their analyses. Because the safety injection tank actuation pressure is approximately 800 psi** below the secondary system relief valve setpoint, the steam generators will be heat sources rather than sinks for any breaks which depressurize to the core flood tank setpoints and natural circulation would not be a requirement for decay heat removal. Therefore, gas sources from the core flood tanks have not been included in the analyses. CE has also concluded that for all present Appendix K small break analyses, peak cladding temperatures are low enough that no fission gas sources due to cladding rupture or oxidation sources need be considered. Therefore, they have concluded that gas from sources identified as items (1), (3), and (9) above are available to the primary system.

4.2.1.4.2 Effect on Condensation Heat Transfer and Equilibrium Assumptions

During normal liquid film condensation, the condensing vapor flows toward the condensing surface. If non-condensible gas is present, this gas will be carried with the vapor flow towards the condensing surface and accumulate. An equilibrium concentration will be established when the gas being carried towards the surface with the vapor equals the gas flowing away from the surface due to the pressure gradient of the gas.

CE has provided an analysis of the effect of non-condensible gases on condensation heat transfer utilizing a model which accounts for the processes described above. In this model the heat transferred across the liquid boundary layer and the steam generator tube is equated to the heat transferred by mass diffusion and conduction through the vapor boundary layer. This approach however, assumes that the heat transferred through the liquid film is equal to the heat transferred through both the liquid and vapor films when non-condensible gases are not present. The mass transfer correlation used is that recommended by Collier[29]. The assumption that the heat transferred through the liquid film is equal to the heat transferred through both the liquid and vapor film is conservative, since the thermal resistance of the liquid film includes that of the vapor as well. In addition, the condensation heat transfer correlation used, including the effects of non-condensible gases, has not been experimentaly verified under conditions and geometries prototypical of small breaks in CE steam generators. The required comparisons of the CE analyses to Semiscale test S-07-10B and LOFT test L3-1 (see Section 4.2.1.5 of this appendix) are expected to provide some confirmatory information on the acceptability of the condensation heat transfer model.

*This is a low pressure system. Any rise in tank pressure will relieve through the tank safety valve.
**Approximately 400 psi for ANO-2

However, additional confirmatory information on the effects of non-condensible gas may also be required.

CE evaluated the effect of degraded steam generator condensation heat transfer on the primary side pressure. Their analyses showed that if the maximum expected mass fraction of air from the refueling water storage tank (this source was calculated to overwhelm the others, and therefore was considered a good estimate of the total source) accumulated in the steam generators, the overall heat transfer coefficient would be degraded by about there percent, and the resultant increase in primary pressure was calculated to be about two percent.

4.2.1.4.3 Effect on Fluid Flow

In the event a sufficient amount of non-condensible gas accumulated in the primary system flow paths, particularly the top of the steam generator U-tubes, it could potentially block natural circulation flow.

CE estimated that approximately 40 pounds of air would come out of solution from the injected refueling water over an 8-hour period for a 0.02 $ft.^2$ break. This was shown to be less than the amount required to prevent natural circulation for pressures down to slightly below the shutdown cooling entry point (300 psi). Moreover, it was considered that realistically the free gas in the system would accumulate preferrably in the upper head region of the vessel.* Gas that did enter the steam generators would probably not distribute uniformly among the tubes, allowing natural circulation through some tubes. Finally, it was considered that some of the gas would go back into solution in the steam generators.

The above arguments considered the capability to restore natural circulation if non-condensibles had filled the top of the steam generator U-tubes. This was evaluated by examining the density gradients necessary to sweep a bubble out of the U-tubes.

4.2.1.4.4 Conclusions

The staff has reviewed the CE evaluation of the effect of non-condensible gases on system behavior during small break accidents. We have found this evaluation acceptable. However, confirmatory information of predicted condensation heat transfer rates in the presence of non-condensible gases is required.

*Because of this, the staff has required all operating plants to install venting capability of all system high points. This requirement was transmitted in a letter from D. Eisenhut to all operating plants on September 13, 1979.

4.2.1.5 Experimental Verification

In order to fully understand plant response to small primary coolant system breaks, it is necessary to verify the calculational models used to predict small break behavior.

Many of the individual models within the overall CE evaluation model have previously undergone comparisons against experimental data as well as other methods of verification. However, the accident at TMI-2 has emphasized the importance of certain phenomena which are expected to occur during a small break LOCA. From this, the staff has identified certain models, methods, or features of the computer programs which require more extensive verification.

In addition to verification of individual models, it is also necessary to assure the proper interaction of these models within the overall systems evaluation model. This is accomplished through verification by comparison to integral systems tests. In the following two sections, both previous and planned integral systems tests designed for small break code verification are discussed.

4.2.1.5.1 Semiscale Small Break Test S-02-6

As part of both the United States Standard Problem Program and the International Standard Problem Program*, a test was conducted in November 1975 in the Semiscale facility to simulate the behavior of a six percent small break in the cold leg. This test is designated S-02-6. Comparisons of pretest predictions by other PWR vendors (CE chose not to participate in this test) to the measured data showed poor agreement. However, certain test measurements were questionable, including the measured break flow and vessel inventory. A more complete description of test S-02-6 and the comparisons of vendor predictions to the measured data can be found in reference 26.

As a result of this test, the staff concluded that additional data on small break behavior was needed. Available information indicated that large uncertainties in the calculational models could exist and better and more extensive comparisons of calculational models to experimental data were needed.

4.2.1.5.2 Semiscale Small Break Test S-07-10B

As a result of the possible data inaccuracies in test S-02-6, as well as the inaccurate predictions of the measured data, a second test, designed to provide integral system thermal-hydraulic behavior of cold leg small break was performed in the Semiscale Facility by EG&G Idaho, Inc. on January 19, 1979.

*The U.S. and International Standard Problem Programs are voluntary participation programs in which participants predict the thermal hydraulic behavior of agreed-upon experimental tests. The tests selected are designed to challenge certain methods, features, and/or models of loss-of-coolant accident analysis computer codes used in reactor design and safety evaluations.

The staff had requested CE, along with other PWR vendors, to perform a "blind"* prediction of this small break test (S-07-10B). The data from this test were withheld from public disclosure until all of the vendor predictions were received by the staff. Only the initial test conditions have been provided for the calculations. CE did not submit a "blind" prediction on the requested schedule, but rather submitted a description of their model with which they intended to perform their pretest prediction of test S-07-10B on December 3, 1979. The data from test S-07-10B were publically released on December 3, 1979, and EG&G, Idaho will evaluate how well each of the vendor's predictions compared with the test data. From these comparisons, as well as those performed by the staff, the need for each vendor to improve certain models or certain aspects of the models will be determined.

4.2.1.5.3 LOFT Small Break Tests

In addition to verifying vendor small break analysis models with data from Semiscale test S-07-10B, a specified small break simulation test (LOFT Test L3-1) has been performed in the LOFT facility. The licensee's have been requested to prepare pretest predictions of this test's thermal-hydraulic behavior in the same way it was done for Semiscale Test S-07-10B.

The specific conditions and characteristics for the LOFT test are as follows:

- Power-50 Mwth
- Heat rate-16 Kw/ft.
- Break size-approximately 2.5 percent
- Break location-cold leg

The test was conducted on November 20, 1979.

In addition to test L3-1, the staff has required in reference 7 that all PWR vendors and fuel suppliers provide pretest predictions of LOFT test L3-6, scheduled to be run in March, 1980. LOFT test L3-6 will be a small break loss-of-coolant test in which the reactor coolant pumps will remain running throughout the test. A more complete description of the basis for this test is provided in Section 4 of reference 5.

4.2.1.5.4 Testing Basis

As part of the evaluation of the extent of additional small break model verification required in light of the accident at TMI-2, the staff concluded that model comparisons to integral systems tests in both Semiscale and LOFT test facilities were necessary.**

*"Blind" predictions are calculations made to predict the expected test Behavior. Typically, the test is run and the test results are not released until all of the predictions have been made. The reason the test is run in advance of the predictions is so that the actual initial conditions of the test can be used for the predictions. Once the predictions have been made, then the test data is released.

**The staff did not foreclose the option for the industry to propose alternative integral systems tests for model verification. However, to date, no alternative tests have been proposed by the industry.

The primary reason for requiring model comparison to tests in both facilities was the need to facilitate extrapolation to full scale.

At present, there are no test data available on small break behavior in a large scale PWR. The data from TMI-2, while extremely valuable, are not complete for the purpose of integral model verification.

For example, the actual secondary heat load was not known, as well as the system inventory or PORV discharge mass flow. In addition, the system behavior was primarily applicable to B&W lowered-loop design plants with once-through steam generators and not Westinghouse or CE plants.

Because of this, integral systems verification of analytical models and methods must depend on scaled tests. In order to extrapolate the scaled data to full size plants, at least two different size scaled tests are needed. This has been the underlying basis for the NRC's integral systems research program and is accomplished with the Semiscale and LOFT facilities.

The thermal-hydraulic phenomena that are predicted to occur during a small break LOCA are complex. Because of size and design constraints, neither Semiscale nor LOFT can satisfy all of the scaling requirements needed to directly extrapolate test results to large scale PWRs.

The Semiscale facility has some atypicalities associated with it. For example, the Semiscale facility is highly one-dimensional and because of this has a much larger surface-to-volume ratio than a large PWR. Thus, heat losses from the system are expected to be greater.

LOFT, on the other hand, has a much shorter core (5.5 ft.) compared to a large PWR (12 ft.), although the downcomer height is approximately the same as a PWR. The upper plenum is also disproportionately large.

Thus, while each system has unique atypicalities, they are in many respects complementary and combined will provide a substantially improved data base for model verification than either facility would on its own.

4.2.1.6 Break Discharge Model

The mass flow rate from postulated reactor system breaks is calculated by CE FLASH-4AS as the product of the break area and the mass flux (flow rate per unit area). The mass flux is calculated using the modified Henry-Fauske Model when the fluid stagnation condition upstream from the break is subcooled. For saturated or two-phase fluid, the mass flux is calculated using the Moody slip flow model. For dry steam in the superheated state, the modified Murdock-Bauman Model is used. These models were derived theoretically to predict the maximum critical flow rate. The

Henry-Fauske and Murdock-Bauman models were modified by CE to converge with the Moody model for saturated liquid flow and saturated steam flow, respectively.

Investigations by Powell,[30] Sozzi, and Sutherland[31], Simon[32], and experiments at the Marviken Power Station[33] have demonstrated a wide variation in mass flux as a function of break geometry. Mass flux was shown to be influenced by the degree of curvature at the break inlet, flow passage diameter, flow passage length, and the ratio of the break diameter to the vessel diameter. Correlations incorporating all these factors are not available at the present time. Moreover, small break geometries postulated for reactor systems could range from splits in pipes to double ended breaks restrained by pipe supports, and could include full ruptures in small diameter pipes.

CE has provided a sensitivity study of the effect of different break flow models on the amount of core uncovery predicted by CE FLASH-4AS. The break flow model was found to have a minimal effect on the core water inventory, and CE concluded that the CEFLASH-4AS small break analytical method which includes the evaluation of a spectrum of break sizes is adequate to account for uncertainties in the break flow model produced by variations in break geometry. The staff agrees with this conclusion for the purpose of these analyses.

The sensitivity study by CE involved increasing the flow rate for subcooled flow above the values predicted by the modified Henry-Fauske model and using the Moody model unchanged for the two-phase and the modified Murdock-Bauman model for all steam flow. For a cold leg break the flow was subcooled for most of the analysis so that the increase in the break flow acted like a larger break size. This study covered only one break size and did not include cases with loss of auxiliary feedwater. We will require additional evaluations of break flow in our evlauation of the LOCA models discussed in Section 4.2.1.10. Additional insight as to the expected break flow and the effect on peak cladding temperatures and the amount of core uncovery will be obtained by comparisons of CEFLASH-4S predictions with Semiscale and LOFT tests discussed in Section 4.2.1.5.

To calculate the flow through the PORV, CE uses the valve flow area and the flow rate per unit area predicted by the flow models in CEFLASH-4AS. The predicted flow for dry steam is approximately 20 percent higher using the CE model than the manufacturer's rated capacity. The rated capacity includes a 90 percent reduction factor which is applied to the expected valve flow rate.

PORVs are not tested at rated conditions for either steam or two-phase flow.[2] Although the Moody model predicts flows for steam that are approximately 10 percent higher than the Napier formula, which is normally used to size the PORV, data from Semiscale[34] indicates that the Moody model predicts flows which are 70 percent higher than the data. Thus, the CE model might overpredict flow by as much as 100 percent (1.2/0.6) for the case of a stuck-open PORV when the flow is two-phase. However, the CE model would probably be conservative for the analysis of fluid

inventory lost from the system. For the assumed case of a complete loss of feedwater, operator action is required to open the PORVs to depressurize the system so that HPI can be actuated. In this case, the results may be non-conservative for predicting the decompression rate. This concern may be resolved by testing the PORV under single and two-phase flow conditions as recomended in NUREG-0578.

4.2.1.7 Vessel Mixture Level

CE calculates the mixture level in the inner vessel using a bubble drift velocity correlation that is a function of pressure only. This correlation has been compared to applicable data in reference 35, and staff approval of this model was given in reference 36.

Comparisons of the calculated mixture level using this bubble drift velocity model to measured values of mixture level were performed.

Containment systems experiement blowdown tests with breaks at both the top and bottom of the vessel were compared by CE to their model. These comparisons showed good agreement between the measured and predicted system pressure and vessel mixture level.

Comparisons were also made to boiloff tests performed by Westinghouse at pressures between 400 psia and 14.7 psia. These comparisons also showed good agreement between the data and the model predictions.

From these comparisons, the staff concludes that the mixture level model used by CE is acceptable.

4.2.1.8 System Noding Detail

The CEFLASH-4AS nodal models depicted in Figures 3.3-14, and 3.3-15 of the CE report[3] use a relatively small number of nodes to represent major plant components. Nodal sensitivity studies for the slow depressurization transients encountered in the very small breaks have not been performed. As a result, we question the adequacy of coarse noding models to represent the flashing of liquid that will have temperature gradients between the nodal boundaries. The thermal homogenization imposed by coarse noding masks the shorter term flashing dynamics that can result in short term system transient differences. This can be significant for pressurizer and reactor vessel response in depressurization transients where single node representations are used in CEFLASH-4AS. As a result, CE should provide nodal sensitivity analyses for these and comparable plant components to assess the role of nodal detail in the computed system transients.

4.2.1.9 Equilibrium Assumption in System Representation

All of the major computer codes used by the PWR vendors to predict thermal-hydraulic behavior for small break LOCAs assume thermodynamic equilibrium within a given fluid

control volume. This assumption requires that all steam and liquid calculated to exist within a control volume be at the same temperature and pressure. This also requires the assumption of instantaneous mass and energy transfer to maintain equilibrium (for example, superheated steam and subcooled or saturated water would not be allowed to exist within the same control volume).

During the recovery perod of a small break LOCA, the equilibrium assumption requires that the liquid refilling the system condense steam with 100 percent efficiency. If the condensation efficiency was less than 100 percent, then some compression of the steam would occur, raising the system pressure. This, in turn, would serve to increase the break flow and reduce the HPI flow.

CE has not addressed the non-equilibrium effects during the refilling period of a small break LOCA. While it is the staff's judgment that this effect is expected to be small for cases in which feedwater is available, there is a potential for the effect to become significant for the loss of all feedwater case.

A second area in which non-equilibrium effects have been shown to be pronounced is during discharge of the safety injection tanks.

There are a number of uncertainties introduced into small break analyses through uncertainties in ECC injection modeling. Because of the equilibrium assumptions made in the analysis codes, subcooled water injection into a steam-filled pipe would be calculated to instantaneously condense all of the steam it was capable of condensing. This rapidly lowers the calculated pressure at the injection location and can produce calculational instabilities in the computer code. To minimize the calculational instabilities, some CE models the injection location in the downcomer and Westinghouse in the lower plenum. This is done so that the water is injected into a region with liquid and therefore the rapid condensation of steam is eliminated. In reality, all three vendors have their high pressure injection in the cold leg pipe, and both CE and Westinghouse have accumulator injection in the cold leg. B&W plants have the accumulator injection in the upper downcomer annulus.

Also, in conjunction with this is the uncertainty introduced by the size of the fluid control volume chosen. The amount of steam available for condensation within a control volume is dependent upon the size of the control volume.

The above concerns result in an uncertainty in the local presssure at the injection location. Since the amount of injection flow is determined by the pressure difference between the safety injection tank and the local pressure in the pipe, uncertainties in local pressure will result in uncertainties in the amount of ECC water injection into the system.

While the analyses presented in Reference 3 are sufficient for developing appropriate operator guidelines, CE will have to address these non-equilibrium effects in greater detail as part of the model approved for Appendix K compliance.

4.2.1.10 Conclusions

The following conclusions summarize those found in the individual subsections of this section.

1. We have reviewed the effects of surge line and pressurizer modeling assumptions in the CE evaluation model. It is our conclusion that the present models are acceptable for the purpose of performing small break LOCA analyses to develop improved guidelines for the training of reactor operators. For the Maine Yankee plant, HPI termination criteria does not rely on pressurizer level. However, the staff has requested confirmatory analyses to be submitted. If these analyses show that non-equilibrium processes can affect the HPI termination criteria, appropriate corrective action will be taken.

   In order to demonstrate compliance with Appendix K to 10 CFR 50, additional justification for the equilibrium assumption will be necessary.

2. The staff has reviewed the CE evaluation of the effect of non-condensible gases on system behavior during small break accidents. We have found this evaluation acceptable. However, confirmatory information of predicted condensation heat transfer rates in the presence of non-condensible gases is required.

3. The staff has required that CE perform pretest predictions of both Semiscale Small Break Test S-07-10B and LOFT Small Break Test L3-1.

4. The staff finds acceptable the mixture level model used by CE for small break analyses with the pumps tripped.

5. Additional nodal sensitivity studies are required to confirm the adequacy of the hot region nodal detail to properly account for flashing during depressurization in a small break LOCA. Moveover, as part of the model verification studies performed against the LOFT test, the sensitivity of model response to the size and Location of the node attached to the SIT should be assessed.

6. Experimental verification of two-phase mixture response and heat transfer in the steam generator tubes during condensation heat transfer is required to justify primary side modeling using a bubble rise or homogeneous model.

   Additional analyses are recommended to quantify the effect of the steam generator tube hot side modeling as a homogeneous mixture on the system pressure response for very small breaks, including hot leg breaks.

7. The staff has reviewed the CE steam generator model. The staff finds the models used acceptable for development of small break operator guidelines. As concluded for both Section 4.2.1.3 (Steam Generator Model) and Section 4.2.1.4 (effect of

non-condensible gases), we will require that confirmatory information be provided to quantify the conservatisms in the heat transfer models, including the effects of non-condensible gases, used for predicting steam generator performance.

In addition, we will require that confirmatory information be provided which demonstrates the adequacy of the steam generator nodal representation utilized for small break analyses.

8. The above confirmatory information, along with documentation of the analysis methods used for very small break LOCAs should be submitted to demonstrate conformance with Appendix K to 10 CFR 50. In addition, plant-specific calculations using the approved models for very small breaks should be submitted.

4.2.1.11 Recommendations

(a) The analysis methods used by CE for small break LOCA analysis for compliance with Appendix K to 10 CFR Part 50 should be revised, documented, and resubmitted for NRC approval. The revisions should account for comparisons with experimental data, including LOFT and semiscale tests.

(b) Plant-specific calculations, using the NRC approved model for small break LOCA analysis, as described in (a) above to show compliance with 10 CFR §50.46, should be submitted for all CE designed operating plants, for NRC approval.

4.2.2 Vendor Small Break LOCA Calculations

Small break spectrum studies for licensing applications in accordance with the requirements of Appendix K to 10 CFR 50 have concentrated on breaks resulting in core uncovery. Breaks smaller than the smallest break predicting core uncovery were not usually analyzed as they were not of interest in terms of potential core damage. Component and/or system operability assumptions made for these analyses were based on the single failure criterion specified in Appendix K. Multiple failures or malfunctions of plant components and/or systems coupled with, or independent of, operator intervention were therefore not considered. Failure modes analyzed under the single failure criterion coupled with the prescribed operational procedures required to control the progress of small break accidents and bring the reactor into the long term cooling mode were considered to encompass the range and variety of small break scenarios that could occur. Since the TMI-2 accident in March 1979, these assumptions have undergone a basic reassessment, and additional small break scenarios over a greater span of small break sizes have been subjected to analysis. These analyses assess the probable outcome of such accidents for plant safety as well as to serve as a basis for the preparation of operational guidelines for operator action to be taken in the event of such accidents. The reassessment has considered loss of steam generator heat removal capacity, delayed ECCS pumped injection, delayed tripping of reactor coolant pumps, pressurizer vapor space breaks and manual HPI termination as part of small break spectrum studies. In addition, the lower end of the small break spectrum has been

analyzed to consider response characteristics in this part of the spectrum as part of our systematic reevaluation of small break scenarios.

The analyses performed to assess small break responses to the various conditions requested by the NRC[2] have, in general, used CE's approved small break model CEFLASH-4AS;[26] however, model modifications were required for some transients due to the specific needs for proper modeling of component conditions in these transients. These modified models are identified in the following discussions summarizing the CE predicted results for the various postulated small break scenarios.

4.2.2.1 Small Break LOCA Characteristics

System depressurization and coolant inventory in small breaks are controlled primarily by the interaction of energy and mass lost through the break, heat removal rates at the steam generator as determined by auxiliary feedwater flow and secondary safety valve setpoint, and safety injection pump characteristics. System pressure and reactor vessel inventory response to breaks in the small break spectrum were considered qualitatively by CE prior to developing quantitative results. This was done to provide a generalized description of CE plant response to small break LOCAs as requested by the NRC.[2]

Small breaks exhibit three characteristic responses depending upon break size. For the larger breaks, rapid depressurization of the primary system to below secondary pressure and possibly down to the safety injection tank actuation pressure will occur as energy removal at the break is greater than core decay heat input, with steam generator heat removal playing a negative role in the transient. As break size is reduced, dependence on energy removal through the steam generator becomes significant and the pressure decay is held at the steam generator secondary pressure relief set point for an interval determined by the balance established between core decay heat input and and energy removal at the break and steam generator. For smaller breaks large enough to exceed makeup system capacity, depressurization to an intermediate level between steam generator secondary relief setpoint and HPSI shutoff head will occur. This is a result of mass flow rate balance between the break and the high pressure safety injection (HPSI), and an energy balance between core input and removal through the break and steam generator.

CE has estimated that breaks larger than 0.1 $ft.^2$ will result in the first type of depressurization transient. Breaks between 0.1 $ft.^2$ (~4 in. dia.) and 0.02 $ft.^2$ (~2 in. dia.) will result in the second type of depressurization to the secondary side relief setpoint. Breaks less than 0.02 $ft.^2$ will result in the third type of depressurization to an intermediate level between the secondary relief and HPI shutoff. Each type of break was assessed quantitatively for a representative CE plant, and is discussed further in the next section.

In addition to the influence of break size, the location of the break in the primary system has an important role in the depressurization transient as a result of the difference in energy removal when the break flow changes from liquid to vapor. To assess the influence of break location, a quantitative analysis of location effects was also performed, and is discussed in Section 4.2.2.2.

The small break analyses performed to quantify system response to break size and location have traditionally assumed normal steam generator main and auxiliary feedwater system response. From the discussion of qualitative response characteristics above, the importance of energy removal through the steam generator for breaks in the smaller (less than 0.1 $ft.^2$) categories was highlighted. Loss of this heat removal mode for these breaks would result in primary system repressurization to the pressurizer PORV setpoint, and these valves would then serve as an additional energy removal path for the primary system. Small breaks coupled with the loss of auxiliary feedwater following main feedwater termination by reactor scram were also assessed quantitatively by CE, and are discussed in Section 4.2.2.3.

Loss-of-feedwater flow events typically do not result in primary system pressurization to the PORV setpoint because of normal control and protective system response. Failure to activate auxiliary feedwater flow as designed however, will pressurize the primary side to the PORV setpoint. To assess system response to this failure, CE has analyzed two potential PORV responses: normal, and stuck-open. The results are discussed in Section 4.2.2.4.

4.2.2.2 Small Break Spectrum Analyses

To assess small break response characteristics of CE plants for the three pressure response modes identified in Item (8) of the NRC request,[2] CE performed analyses on 0.1, 0.02, and 0.0005 $ft.^2$ cold leg breaks, and on a stuck open pressurizer PORV for a 2700 MWt plant using the CE small break model with the CEFLASH-4AS program. These analyses approximated Appendix K type analyses in that coincident loss-of-offsite power and loss of one diesel generator was assumed. The only variation from Appendix K requirements was the use of the ANS (American Nuclear Society) decay heat generation curve without the 1.2 multiplier, so that the long-term heat generation input was a "best estimate" value.

For the 0.1 $ft.^2$ (4.28 in. dia.) breaks selected to demonstrate a small break in which the core uncovers, depressurization to the HPSI actuation set point occurs 27 seconds after the break, and HPSI flow begins 30 seconds later. Because the break is large enough to remove energy at a greater rate than the core decay power input, depressurization continues down to below 300 psia but remains above the safety injection tank pressure (215 psia) 30 minutes after the break. At this time the depressurization is quite slow, and will eventually reach the safety injection tank set point pressure, but the transient calculation was not carried to that point. Coolant inventory loss reduces reactor vessel mixture height below the top of the core at 850 seconds (14 mins.) while pressure is near 400 psia, and the combination of increased HPSI flow

with decreasing system pressure and decreased leakage rate results in core recovery at 2050 seconds (34 mins.) with pressure just under 250 psia. Core recovery to a depth two feet below the top of the core occurs at 1190 seconds (20 mins.) producing a peak cladding temperature of 1059°F for the small break.

As noted above, the low pressure safety injection tanks did not activate during the core uncovery interval. To compare the behavior of the system with 600 psig safety injection tanks, an additional analysis was performed. In this case depressurization to the setpoint level occurs and safety injection tank injection begins 620 seconds after the break. Condensation of system steam occurs upon injection of the subcooled safety injection tank water, predicting a sharp reduction in system pressure to 290 psia. Pressure recovery to 400 psia occurs after safety injection tank pressure and system pressure equilibrate and safety injection tank injection ceases. The safety injection tank coolant, having been injected before core uncovery begins, is sufficient to prevent uncovery and raises the vessel mixture level from about 2.5 feet above the core to 5.5 feet above the core for the remainder of the transient.

The 0.02 $ft.^2$ (1.91 in. diameter) break was selected to demonstrate the characteristic response of the next smaller break. Depressurization to the HPSI actuation setpoint occurs at 108 seconds, and stabilizes just under 1100 psia while liquid is discharged from the break. A two phase mixture begins discharging from the break at about 1560 seconds and system pressure is reduced to about 1000 psia, or nearer to the secondary relief setpoint due to the reduced dependency on the steam generator to remove primary side energy. From this point in the transient, system pressure decreases slowly due to the increasing break flow quality and decreasing core decay power, each reducing dependency on the steam generator for energy removal from the primary system. At about 2540 seconds (42 min.), energy lost through the break and core decay power equalize with a subsequent slow depressurization below the secondary side pressure as dependence on steam generator removal ceases. The reduced inventory loss rate for the smaller break and HPSI system makeup result in a considerably smaller inventory loss than the small breaks previously discussed, so that vessel mixture height remains between five to six feet above the top of the core for most of the transient. A level drop to about 2.5 feet above the core occurred during the break flow transition from liquid to steam between 1500 and 1600 seconds into the event.

For the smaller breaks in which HPSI head-flow characteristics influence the depressurization transient, the 0.0005 $ft.^2$ (0.3 in. diameter) break was analyzed. In this case, depressurization to the low pressure reactor trip level (1720 psia) requires just over 1 hour. Upon reactor trip, the reactor coolant pumps are also assumed to be tripped, and system cooldown results in a rapid depressurization to 1200 psia and HPSI flow is actuated when the pressure drops below the actuation setpoint of 1578 psig. Following a 30 second delay for HPSI flow to begin*, pressure recovery to near the HPSI shut-off head (1289 psia) is accomplished, and is sustained for the remainder of

*Although the HPSI setpoint is at 1578 psig, ECC water from the HPSI pump cannot be injected into the primary system until the primary system pressure drops below the HSPI pump shutoff head. Up to this point, the pump recirculates the ECC water back to the storage tank.

the transient. Coolant inventory loss during the transient results in a small vessel mixture level loss of about two feet in the upper head, so that the core remains well covered and cladding temperatures remain close to the coolant temperatures throughout the transient.

For the one CE plant, Maine Yankee, which has a high pressure (2425 psia shut-off) HPSI system, repressurization to near the shut-off head of the pump occurs when the system completely refills, including the pressurizer. Primary system refill for the 0.0005 ft.^{2} break occurs about 10 minutes earlier for the high head HPSI as a result of the greater flow capacity at pressures near the shut-off head for the low-head system. Vessel inventory loss is identical before scram for either HPSI system, and the small mixture level reduction given for the low-head HPSI transient also occurs with the high-head system as the level decrease occurs in the HPSI startup time delay following trip. The higher flow rate for the high-head system results in a more rapid vessel and system refill.

To consider the effect of a very small break in the hot side of the system, comparable to that analysed for cold leg breaks, the pressurizer PORV (0.00754 ft.^{2}, 1.18 in. diameter) was assumed to fail in the stuck open position. The initial steam loss through this valve results in a greater energy release and consequently a more rapid pressure decrease than a comparable cold leg break. For this transient, low pressure scram occurs in 128 seconds after the valve opening, and pressure decays to the steam generator secondary relief setpoint due to decay heat removal by the steam generators. HPSI flow for this break is initiated about 60 seconds after scram, and as a result of the system pressure control by secondary pressure, adequate HPSI flow is maintained to keep the vessel mixture inventory up to the hot leg level.

From these results, it is shown analytically that cold leg breaks result in a greater coolant inventory loss than pressurizer breaks for a given size break. The slower system depressurization, experienced because of subcooled or saturated break flow that typically occurs for cold leg breaks, delays inventory make-up from HPSI and safety injection tank injection. This increases the likelihood of core uncovery for a portion of small break accidents, as was shown for the 0.1 ft.^{2} break. Breaks in the upper end (0.1 to 0.5 ft.^{2}) of the small break spectrum will show increasingly more rapid depressurization and earlier initiation of HPSI flow as break size increases. However, the core uncovery typically predicted for breaks in this portion of the spectrum using Appendix K assumptions generally show peak cladding temperatures below the large break spectrum results due to relatively shorter core uncovery intervals and reduced core uncovery depth.

For smaller breaks, depressurization to the scram level with the aid of heat removal through the steam generators will result in HPSI initiation which restores primary inventory lost through the break to maintain reactor vessel mixture above the core level as was shown for the 0.02 and 0.005 ft.^{2} breaks. Without the heat removal capability through the steam generators, small break depressurization can be severely retarded or even reversed, and the potential for limiting breaks to exist for those very slow inventory loss accidents becomes possible. To investigate such small break

scenarios, CE considered two possible scenarios; a loss-of-feedwater concurrent with a small break, and a loss of feedwater producing a small break (stuck-open relief valve) due to elevated pressure. Results of this investigation are summarized below.

4.2.2.3 Small Breaks With Loss-of-Feedwater

To assess the role of steam generator feedwater flow on small break transients, CE re-analyzed the 0.1, 0.02, and 0.0005 ft.^{2} cold leg breaks with inadvertent PORV opening, and with concurrent loss of main feedwater and subsequent failure to actuate auxiliary feedwater. From the earlier analyses with intact feedwater response, it was found that steam generator heat removal was not a significant factor for breaks of about 0.1 ft.^{2} and larger due to the ability of such breaks to remove more than the post-trip decay heat energy. Dependence on the steam generators for system depressurization was found to begin near the 0.02 ft.^{2} break, and such dependence would increase with decreasing break size. The potential for the greatest core uncovery in this range of break sizes would be for the larger breaks as a result of the greater rate of inventory loss while undergoing a slow depressurization without energy removal at the steam generators.

As a result, the shortest time for operator intervention to recover from such accidents would also be established by the larger breaks in this range. To assess these predicted characteristics, and establish the minimum operator response to prevent core uncovery by initiation of auxiliary feedwater, the four small break cases of the earlier analysis were re-analyzed as indicated above. To provide an additional margin of conservatism on the computed operator response requirement, it was assumed that 25 percent spillage of injected ECC flow would exist throughout ECC injection instead of only during two-phase flow at the break as was assumed in the earlier analysis.

For the 0.1 ft.^{2} break, system depressurization was found to be negligibly affected by the lack of auxiliary feedwater as the steam generator becomes a heat source to the primary side in about 330 seconds when primary pressure drops below secondary pressure. A slightly greater core uncovery in depth and duration was computed for this case, but the major part of this difference was introduced by the ECC injection conservatism. The peak cladding temperature for this accident would be higher than that computed with auxiliary feedwater flow (1059°F), but would be well below specified limits.

For the 0.02 ft.^{2} cold leg break, system depressurization to near the secondary relief setpoint is quite similar with and without auxiliary feedwater flow for the first 800 seconds of the transient. At 800 seconds, the secondary two-phase mixture in the case with auxiliary feedwater has been reduced to a level exposing about 2/3 of the steam generator tube height to steam heat transfer. The reduced energy exchange due to the reduced heat transfer rate results in a primary system repressurization to just under 1400 psia to establish a higher energy removal rate for the break, offsetting the loss of energy removal capacity in the steam generator. At this point in the accident, HPSI flow is shut off due to the pressure rise above the shut-off head.

However, steam begins to flow at the break thereby increasing the energy removal rate and producing a slow pressure reduction. HPSI flow is reactivated after a shut-off interval of 210 seconds near 1400 seconds in the accident due to the depressurization which continues as a result of the decreasing core decay heat. During the pressure rise above the HPSI shut-off head, and subsequent depressurization below this level, a small (less than 1 ft.) short term (60 seconds) core uncovery occurs, but core recovery occurs from level swell when depressurization begins as a result of steam flow at the break. Following reactivation of the HPSI, vessel mixture level slowly decreases for the case without auxiliary feedwater due to the reduced HPSI injection rate and increased break flow resulting from the higher system pressure (approximately 100 psi) over the remainder of the accident. Long term core uncovery would begin in about one hour, and at some time later equilibrium conditions would be established between break flow and HPSI injection due to the continuing depressurization. Following this time, a slow vessel refill would begin as HPSI flow would exceed break flow at the lower pressures.

Because auxiliary feedwater activation at one hour would not immediately reverse the reactor vessel inventory loss, such action before this time is required. CE analyzed the activation of the auxiliary feedwater system at 30 minutes after the break when vessel mixture level is still 3.5 feet above the core. From this time it is predicted that vessel inventory loss would be reversed about 10 minutes later, and no core uncovery would occur. As the 0.02 $ft.^2$ represents the largest break that is dependent on steam generator heat removal to avoid core uncovery, the 30 minute delay for operator activation of the auxiliary feedwater system represents an acceptable response time in the event the system fails to activate automatically. From the conservative results obtained in this analysis, an upper limit response time could be 10 to 20 minutes longer but the 30 minute delay provides an appreciable margin for safety.

For very small breaks, the concurrent loss of both normal and auxiliary feedwater flow would result in a considerably different accident from the case with normal auxiliary feedwater system activation. Reactor trip would occur on steam generator secondary low level instead of on primary side low pressure, and would occur in 17 seconds, or more than one hour earlier than in the case with auxiliary feedwater. A rapid primary depressurization would occur before the steam generators dried out, but the approach to dry-out would result in a primary system repressurization. The system would repressurize to the PORV setpoint (2400 psia) due to the inability of the break to relieve the expanded coolant volume. For the 0.0005 $ft.^2$ cold leg break, the combination of inventory loss through the break and PORV is inadequate to accomodate the coolant volume increase, so that pressure rise continues to the first pressurizer safety valve setpoint (2500 psia). The pressure then stabilizes at this set point.

Stabilization of the system pressure at the safety valve setpoint, and continued volumetric expansion of the coolant by core heating results in steam formation in the core coolant at about 2700 seconds into the accident. When steam from the core is transported through the hot leg to the pressurizer and begins flowing through the PORV and safety valve, the increased volumetric flow acts to reduce pressure, and the

safety valve closes at about one hour into the accident. Continued discharge of two-phase coolant at the break and PORV while the system pressure is at the PORV setpoint continues to deplete the system coolant inventory. Because no HPSI flow can occur at this pressure, inventory depletion results in core uncovery at 4200 seconds if no operator action occurs.

Results of auxiliary feedwater system actuation in 30 minutes for this accident was not assessed, and from results shown for the 0.02 $ft.^2$ break with delayed actuation of the auxiliary feedwater system, the depressurization resulting from the reestablishment of steam generator heat removal is not large or rapid. In the 0.02 $ft.^2$ break case, dependence on the steam generator for decay heat removal is not as great as for smaller breaks, and a relatively mild depressurization effect would be expected as was shown in the computed results. For the smaller breaks, the core uncovery interval that would occur before HPSI was adequate to recover the core could demonstrate high, if not limiting, peak cladding temperatures. Because of the potential to uncover a large fraction of the core for small breaks that are incapable of depressurizing the system to the HPSI actuation set point when auxiliary feedwater is unavailable, further analyses of system transients for such accidents with delayed auxiliary feedwater system actuation are required to more adequately identify the allowable operator response time for the prevention of core uncovery in such accident scenarios.

In the case of an inadvertent opening of the PORV and failure of either the main or the auxiliary feedwater system to activate after reactor trip, primary system pressure will decrease to near the steam generator secondary relief setpoint while steam generator dry-out is in progress. When secondary boil-off has reduced the steam generator secondary inventory to about 20 percent in 1600 seconds, repressurization begins, and by 2480 seconds the pressure has reached the HPSI shut-off head. Reactor vessel mixture level is maintained at the hot leg elevation for an extended interval following cessation of HPSI flow due to the break flow and slowly increasing vessel mixture quality. At the end of one hour, system pressure has risen to 1800 psia and is still rising.

Auxiliary feedwater system activation in 20 minutes after low pressure scram would provide the necessary depressurization to reactivate HPSI action and maintain vessel mixture level well above the core.

4.2.2.4 Loss-of-Feedwater and Stuck Open PORV

The loss-of-feedwater accident accompanied by a failure to activate feedwater following reactor trip and an off-site power loss to the primary pumps was considered by CE for three PORV response scenarios; namely, normal response, one PORV stuck open, and two PORVs stuck open. The loss of feedwater in all three cases initiates reactor trip in 17 seconds on low steam generator level. Upon reactor and pump trip, system pressure is reduced rapidly to about 2000 psia due to collapse of the core temperature rise, and appreciable heat removal capability in the steam generators. Following pump flow coastdown, natural circulation flow is established, and the core coolant temperature

rise is reestablished. Continued loss of steam generator secondary inventory with consequent decreasing heat removal capability results in an increase in primary coolant average temperature and volume. By about 1950 seconds steam generator dry-out is complete and all core decay heat is absorbed in the primary system coolant inventory producing a volumetric expansion that fills the pressurizer with either liquid or very low quality coolant, At this point, pressure rises abruptly to the PORV setpoint (2400 psia) where coolant relief through the two PORVs begins (2100 seconds), and is adequate to accommodate the volumetric expansion without further pressure increases until 1000 seconds later when system inventory loss results in an increased inventory quality. At the higher quality the volumetric expansion rate in the primary system inventory increases, again raising system pressure and PORV flow until the first pressurizer safety valve setpoint (2500 psia) is reached at 3440 seconds. The greater relieving capacity of the safety valve stabilizes system pressure at this level for some time.

A two-phase mixture level develops in the reactor vessel at 3100 seconds when the saturation temperature has been reached, and this level continues to decrease with the continued inventory loss through the PORVs. At the time the safety valve opens, the vessel mixture level is near the hot leg elevation. CE has not computed the transient to the start of core uncovery, but estimates uncovery to start at about 4600 seconds (1 hr, 17 mins.).

Operator action proposed by CE to avoid core uncovery for this accident consists of opening the two PORVs prior to 600 seconds in the accident. System pressure reduction obtained by this action is calculated to provide HPSI activation early in the transient, and a considerably slower dry-out of the steam generators. Vessel mixture level develops considerably earlier in the transient but stabilizes near the hot leg elevation for about 1-1/2 hours due to nearly balanced volumetric flows between the break and HPSI. At about 3000 seconds, dry-out occurs in the steam generators resulting in a slow increase in primary system pressure up to the HPSI shut-off pressure, and where vessel level begins to recede. HPSI shut-off occurs at 6300 seconds, but drainage of HPSI water from the cold leg serves to reduce the core boil-off rate and terminate the system pressure rise near 1400 psia at just over 8000 seconds into the transient. Vessel mixture level continues to decrease, however, and core uncovery begins at 11,250 seconds (approximately 187 mins.), or about 6650 seconds (11 mins.) later than in the case with no operator action.

Following the start of core uncovery, the boil-off rate is reduced, and relief through the open PORVs results in a system depressurization which eventually reactivates the HPSI system and starts core recovery. Uncovery to a depth of 8.3 feet is calculated to occur at 12,000 seconds (3 hrs, 20 min.). The peak cladding temperature experienced during the uncovery was computed to be 2040°F. System response for this case was not analyzed beyond when this peak cladding temperature occurred, so that the final stable operating condition was not predicted.

Because the HPSI refill of the vessel will result in a recovery of the core boil-off rate, primary system repressurization can be expected, and may be sufficient to again shut-off HPSI flow. Additional cycling of vessel mixture level and cladding temperature can be expected, but would be attenuated as a result of the decaying core power generation rate. Based on these considerations, the analysis of this accident is not considered complete, and further analysis will be required. The ability for plants to accomodate a loss of all feedwater is discussed in Section 4.2.4 of this appendix.

4.2.2.5 Asymmetric Steam Generator Operation

In the small break spectrum analysis discussed in Section 4.2.2.2 of this appendix, the 0.02 $ft.^2$ break was found to be the largest break with dependence on the steam generators for heat removal. This break has the greatest potential for core uncovery for breaks that are dependent upon the steam generator, and any degradation of steam generator heat removal would aggravate core uncovery transients. To assess the outcome of a conservatively postulated loss of heat removal capability, the 0.02 $ft.^2$ break was re-analyzed assuming isolation of the steam generator in the broken loop, loss of main feedwater concurrent with the break, and subsequent failure of auxiliary feedwater system actuation to the isolated unit.

Steam generator secondary side inventory in the isolated steam generator will be reduced rapidly as in the loss of feedwater accident discussed in Section 4.2.2.4 with reactor trip actuated on low secondary level 17 seconds after the break occurs. Primary system pressure reduction following trip falls below the HPSI setpoint at 48 seconds, so that HPSI flow begins at 78 seconds after the break. Primary pressure continues to decrease below the HPSI injection setpoint due to heat removal in the steam generators, and stabilizes near the secondary relief valve setpoint, but at slightly higher pressures than the case with both steam generators active. The pressure decay differences introduce minor differences in the system flashing and coolant drainage, so that steam flow at the break begins at comparable times in the transient (1600 seconds) for configurations with both steam generators operating. As a result, the vessel level transients for both cases are comparable in time and magnitude, with a drop in vessel mixture level to 2 1/2 feet above the top of the core as steam flow begins at the break. The level is rapidly restored by increased HPSI flow when system pressure drops due to steam relief at the break.

From these results, it has been found that the loss of heat removal by isolation and loss of all feedwater to one steam generator has a small effect on the system depressurization transient. This in turn, results in essentially an identical vessel inventory transient as that predicted for the same break with both steam generators operational. In either case, no core uncovery is predicted.

4.2.2.6 Reactor Coolant Pump Operation During Small Break LOCAs

Most all large break LOCA analyses to date have concluded that tripping of the reactor coolant pumps at the initiation of the accident leads to the highest calculated peak

cladding temperatures. Assuming pump trip at the start of the accident was also consistent with the assumption that offsite power was lost. Because typically this proved to be the most limiting condition of the pump during the large break accident, it was generally assumed that it produced the most limiting conditions as well for the small break LOCA.

Subsequent to the TMI-2 accident, CE, along with the other two PWR vendors, performed analyses of small break LOCAs in which the pumps were assumed to remain running during the accident. They concluded that the major effect of pump operation during a small break LOCA was to redistribute liquid in the primary system. This redistribution resulted in liquid being made available to the break for a longer period of time than for the same case with the pumps tripped. They concluded that for a given range of small break sizes, there existed a range of assumed times for pump trip (e.g., mechanical failure, operator action, etc.) such that the resulting depth and duration of core uncovery would result in cladding temperatures in excess of the 2200°F licensing limit.

The staff has performed a generic assessment of the effect of delayed reactor coolant pump trip. This assessment and the conclusions are documented in reference 5. The key conclusions of reference 5 are (1) the uncertainty in small break analysis models with pumps running is large, and cannot at this time be quantitatively relied upon, (2) the reactor coolant pumps need to be tripped early in the accident and that this trip should be performed automatically, and (3) that model verification by pretest prediction of a forthcoming LOFT small break test with the reactor coolant pumps running (L3-6) will be required.

4.2.2.7 HPI Termination Criteria

The staff-approved guidelines for HPI termination on CE operating plants are consistent with the NRC HPI termination criteria stated in Item 6 (b) of I&E Bulletin No. 79-06B. In addition, CE has expanded their HPI termination recommendations to include post-small break LOCA core cooling and reactivity control.

CE recommendations for pressure control are that HPI operation will be maintained for 20 minutes following automatic actuation, and until the primary system hot and cold legs are 50°F subcooled, or lower, but above the temperature permitted by the pressure-temperature operating restrictions for reactor coolant system integrity.

Coolant inventory control will be based on maintaining a pressurizer level by other systems before HPI termination is permitted. Specified tests using the charging pumps, pressurizer heaters, and pressurizer spray system are to be performed to confirm the proper functioning of the pressurizer level instrumentations for assessing inventory control.

Demonstrations of core cooling capability through the steam generators or the shutdown cooling system will be required for HPI termination. Heat transport to the steam generators will be demonstrated in the case of forced feed by essentially equal hot and cold leg temperatures that are either decreasing slowly, or constant. Feedwater flow to the steam generator and steam flow from the steam generator must be present.

Demonstration that reactivity control exists to allow HPI termination will be based on stable core power within specified levels, fully inserted and operable control rods, a stable average coolant boron concentration within specifications, and an operable boration path.

The termination criteria described above were stated to be applicable to the Maine Yankee plant (which has high shutoff-head HPI pumps). The staff has requested that the analyses supporting these conclusions be submitted for review.

4.2.2.8 Conclusions and Recommendations

The staff has reviewed the vendor small break LOCA calculations. From these analyses we have gained insight into the expected behavior of CE plants to small break LOCAs. Moreover, from this additional insight we have drawn a number of conclusions regarding both the assumptions and limitations of small break analyses. These are discussed as follows:

1. Delayed tripping of the reactor coolant pumps could lead to unacceptable cladding temperatures for a spectrum of small break sites. Therefore, immediate pump trip is necessary to preclude exceeding applicable licensing limits. However, we do not believe tripping of the reactor coolant pumps in case of a LOCA is the ideal solution. We recommend that the licensees consider other solution to this problem, for example increased safety injection flow or partial pump operation.

2. The analyses performed in this section highlighted to fact that equipment which has not been characterized as part of the reactor protection system or as part of the engineered safety features was being relied upon to function as designed. This includes the equipment used to provide coolant pump trip, pressurizer spray valves, pressurizer relief valves and relief block valves, equipment used to automatically activate the pressurizer relief valves, and equipment used to remotely control the pressurizer spray and block valves. Because of this, we believe that the reliability and redundancy of these systems should be reviewed and upgraded if needed, to provide appropriate protection. These systems should also be equalified for the post-LOCA environment consistent with Recommendation 6 of NUREG-0585.

3. Based on our review of the different classes of small break LOCAs, we believe it is necessary for plant simulators used for operator having to offer, as a minimum, the following small break LOCA events:

- continuous depressurization
- pressure stabilized at a valve close to secondary pressure
- repressurization
- stuck open pressurizer relief valves
- stuck open letdown valve.

Each of these cases should be simulated with the reactor coolant pumps running and with the pumps not running. The first three events should be simulated for both hot and cold leg breaks.

4. Based on our review, we have been unable to conclude that appropriate means are available to the operators to verify that natural circulation has been established during a small LOCA. Therefore, we recommend that appropriate means, including additional instrumentation if necessary, be provided in the control room to facilitate checking whether natural circulation has been established.

4.2.3 Plant Simulators

The small break LOCA analyses performed by CE indicate that several modes of primary system depressurization are possible. It is important that training programs expose the reactor operators to the various kinds of system transient behavior and symptoms of inadequate core cooling. However, in previous simulator training, only one small break LOCA was included in the program. For this reason, it is recommended that plant simulation for operator training offer, as a minimum, the following small break LOCA events:

(1) continuous depressurization,
(2) pressure stabilized at a value close to secondary pressure,
(3) repressurization
(4) stuck-open pressurizer relief valve(s), and
(5) stuck-open letdown valve.

Each of these cases should be simulated with reactor coolant pumps running as well as with the pumps turned off. The first three events should be simulated for both cold and hot leg break locations. In addition to assuming single failures in the ECCS and feedwater systems, extended (main and auxiliary) loss of feedwater should also be simulated in conjunction with the above events.

4.2.4 Staff Audit Calculations

4.2.4.1 Introduction

Increased attention has been focused on small break LOCA behavior and overall system response to such breaks as a result of the TMI-2 accident. The primary purpose of the audit calculations is to provide reasonable assurance that the calculated system response obtained from the CEFLASH-4AS computer program can be used as a basis for

guidelines for the development of plant emergency procedures to be used to detect and to mitigate the consequences of a small break LOCA.

Three types of system transients are studied. They are a depressurization, a pressure hang-up, and a repressurization transient. The corresponding break sizes are a 0.1 square foot break a 0.02 square foot break with auxiliary feedwater, and a 0.02 square foot break without auxiliary feedwater. The break location is assumed to be in the pump discharge leg.

The model and assumptions used in the staff analyses are described in Section 4.2.3.2, below. The differences between the RELAP4 and the CEFLASH-4AS analyses which have a significant effect on the analyses are discussed in Section 4.2.3.3, and the results of the analyses are presented in Section 4.2.3.4.

4.2.4.2 Staff Audit Model and Assumptions

The audit calculations were performed with the RELAP4/MOD7 computer program (identified as Version 87).

The starting point for assembling the small-break model was a large-break model of the Calvert Cliffs pressurized water reactor.[37] The model nodalization, code options, and initial and boundary conditions are described below.

The nodalization used for the audit calculations is shown in Figure VIII-1. The following changes were made to the large break Calvert Cliffs model to analyze small breaks:

1. The core was modeled with three volumes and six heat slabs which represented the fuel rods.

2. The primary side of both steam generators was modeled with four volumes.

3. The cold legs were modeled symmetrically by combining volumes in the broken cold leg.

4. The loop seals were re-nodalized to facilitate the calculation of phase separation.

5. The pressurizer and surge line were combined into a single volume.

The user-selected code input options described below were used in the small break audit calculations:

1. Compressible flow with momentum flux is used at all junctions with the exception of those junctions between the reactor vessel and the hot and cold legs, pressurizer and accumulator junctions, core bypass junctions, and all fill functions. Those junctions use incompressible flow with no momentum flux.

RELAP4/MOD7 Nodal Diagram for Calvert Cliffs SBLOCA Analyses

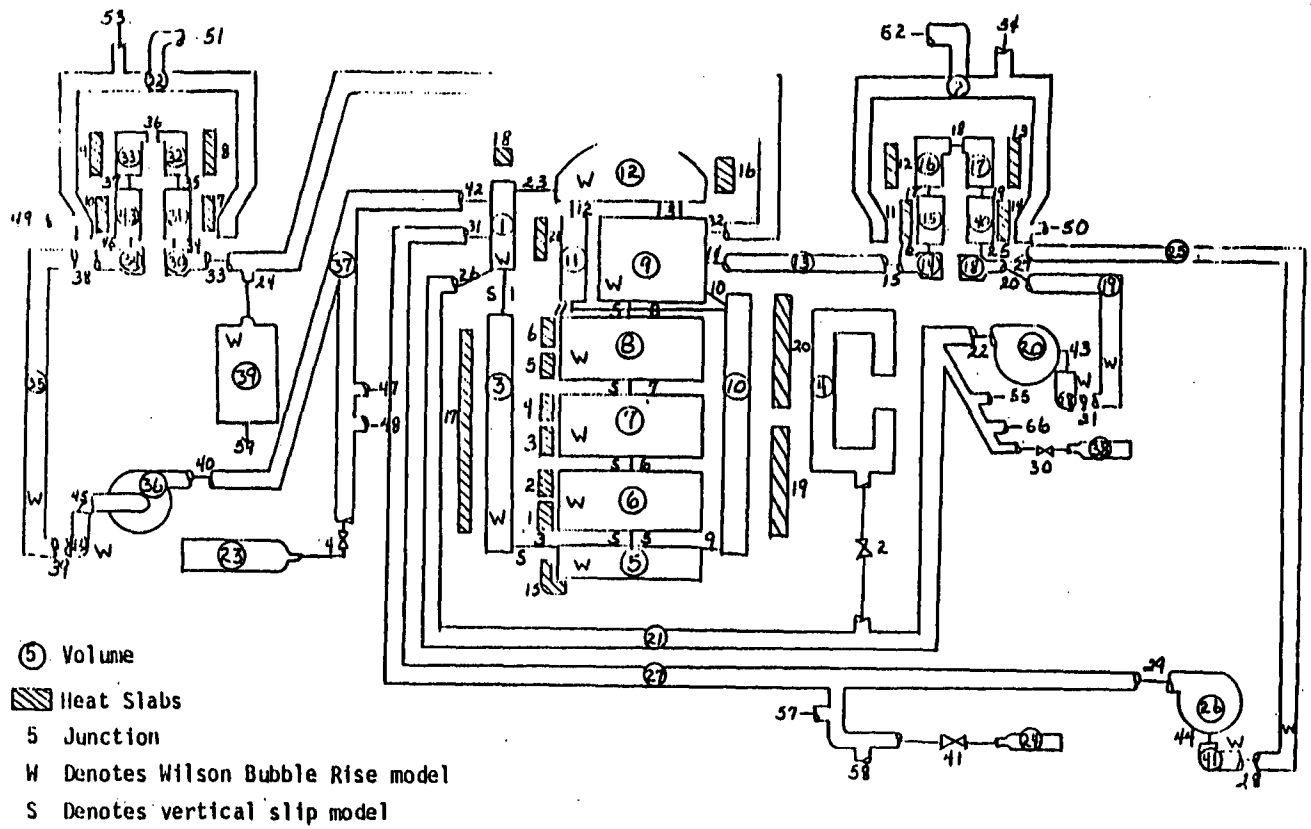

Figure VIII - 1

2. Vertical slip is used in all vertical junctions in the model except in the steam generator U-tubes.

3. The Wilson bubble rise model is used in all reactor vessel volumes (with the exception of the core bypass regions), the pressurizer, and the pumps' suction volumes. A bubble gradient of 0.8 is used. Complete phase separation is modeled in the accumulators. A constant bubble rise velocity and bubble gradient are calculated to achieve an initial energy balance for use in the steam generator secondary side.

4. The pressurizer surge line is lumped into the pressurizer volume. Single volume pressurizers are currently used for all cold leg break analyses.

5. The Henry-Fauske/Moody critical flow option is used. A multiplier of 1.0 is applied to both the subcooled and saturated flow regimes.

6. The new slip model developed for RELAP4/MOD7 is utilized. The new model employs a flow regime dependent correlation which results in a more accurate value for interphase slip velocities.

7. The RELAP4/MOD7 self-initialization routine is used to effect an initial system pressure and energy balance.

8. The non-equilibrium model developed for RELAP4/MOD7 is not used until ECC flow is initiated. However, if deleterious non-homogeneous condensation effects occur prior to ECC flow initiation, the model could be used. The model allows coexistence of subcooled emergency core cooling water with primary system steam in a single volume.

9. The core power was assumed constant from the time of break until scram when an explicit time/reactivity table was used to calculate fission power. Reactivity changes due to variations in fuel temperature and moderator density were neglected. Decay heat was calculated with the new ANS standard.

10. The steam generator secondaries utilize the natural convection option for heat transfer.

11. Reactor trip and reactor coolant pump trip are modeled to occur on low primary system pressure (1728 psia plus a 0.9 second delay).

12. The break hole is located at the cold leg centerline elevation.

13. One HPI pump and one LPI pump were assumed to operate. The other HPI and LPI pumps were assumed to fail. Both safety systems were assumed to be available 30 seconds after the pressurizer depressurizes to 1578 psia. The safety injection flows were split symmetrically between the four cold legs. The assumed fluid

enthalpy was 88 Btu/lbm. The safety injection flows into the broken cold leg were neglected after the downcomer mixture level dropped below the bottom of the cold legs.

14. In the two calculations with auxiliary feedwater, one of the two auxiliary feedwater pumps was assumed to fail. The auxiliary feedwater was turned on linearly between 30 and 31 seconds after scram flow. The enthalpies of the main and auxiliary feedwater were 438.9 and 88.0 Btu/lbm, respectively.

4.2.4.3 Model and Modeling Differences

The analyses performed by CE and by the staff were for the Calvert Cliffs PWR. While the intent of the audit was to study the same events and model the system and input parameters as closely as possible, some differences between the two sets of analyses do exist.

The assumptions associated with safety injection flow into the borken cold leg are different. The effect is on the break flow and system mass inventory. In the CE analyses, the broken leg safety injection flow is neglected when the nodal quality goes to 1.0. In the staff analyses, the safety injection flow is neglected when the downcomer mixture level falls below the bottom of the cold leg.

The modeling of the steam generator secondary side has a significant effect on the analyses, specifically for the case without auxiliary feedwater. The model used by the staff has a course heat slab structure. When the secondary side mixture level falls below the top of the U-tubes, the heat slabs are not calculated to dry out and the subsequent system repressurization is underestimated.

The staff model does not control the auxiliary feedwater as a function of mixture level as is the case in the CE model. The effect is seen in the long term where the staff model depressurizes more rapidly as a result of the excess cold auxiliary feedwater being added to the secondary.

4.2.4.4 Audit Analyses Comparisons

The results of the analyses for the 0.1 square feet break are shown in Figures VIII-2 through VIII-5. The system response to the depressurization is in good agreement (Figure VIII-2). The influence of the assumptions used to neglect the safety injection flow into the broken cold leg and the effect on the break flow is shown in Figure VIII-3. In the staff analysis, the accumulator tanks are actuated at approximately 2200 seconds, resulting in the reduced pressure shown in Figure VIII-2.

The non-equilibrium model currently available in RELAP is still in the developmental stages and has not yet been verified against any integral test data. EG&G believes there is a problem with the condensation model, and has recommended that further

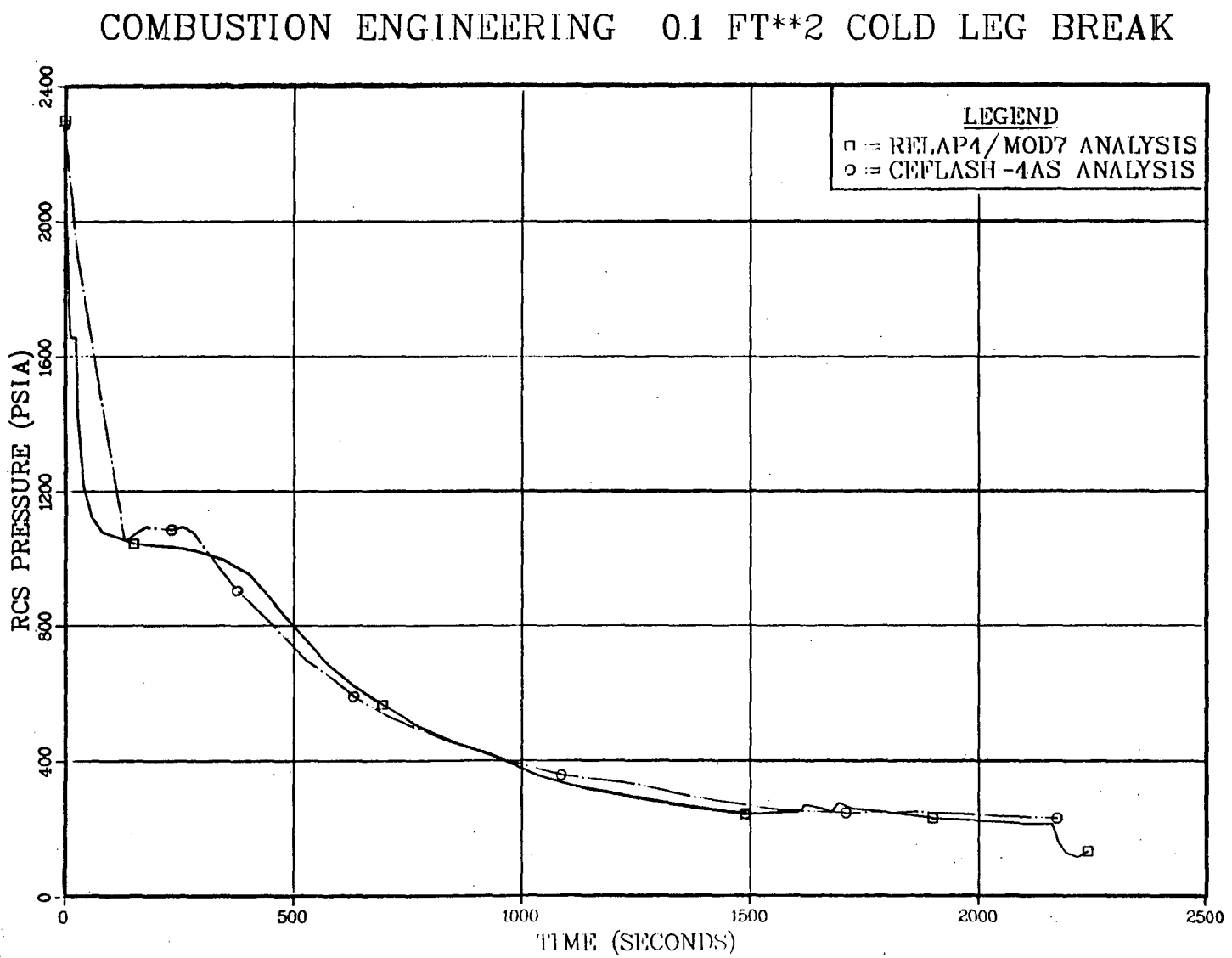

Figure VIII - 2

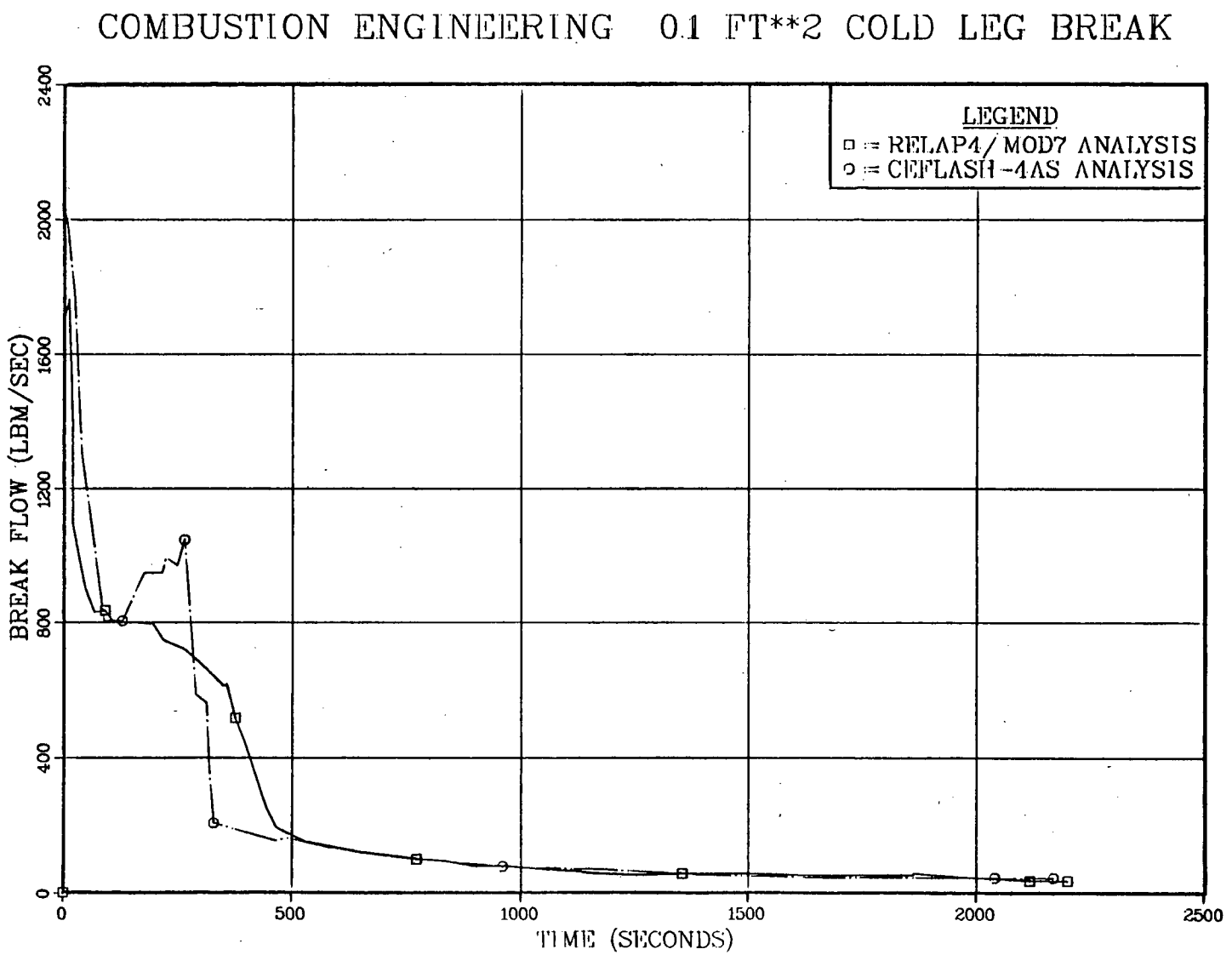

Figure VIII - 3

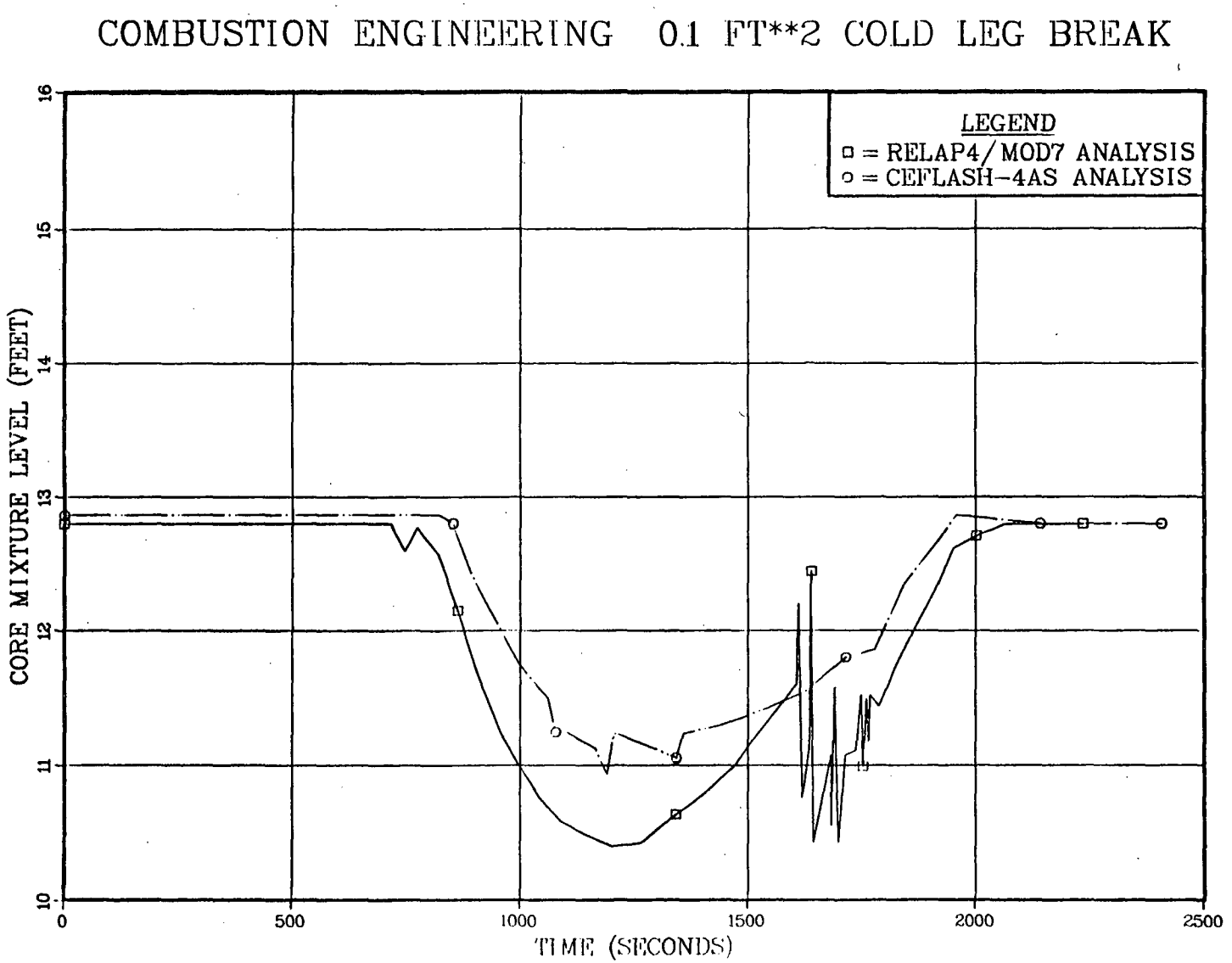

Figure VIII - 4

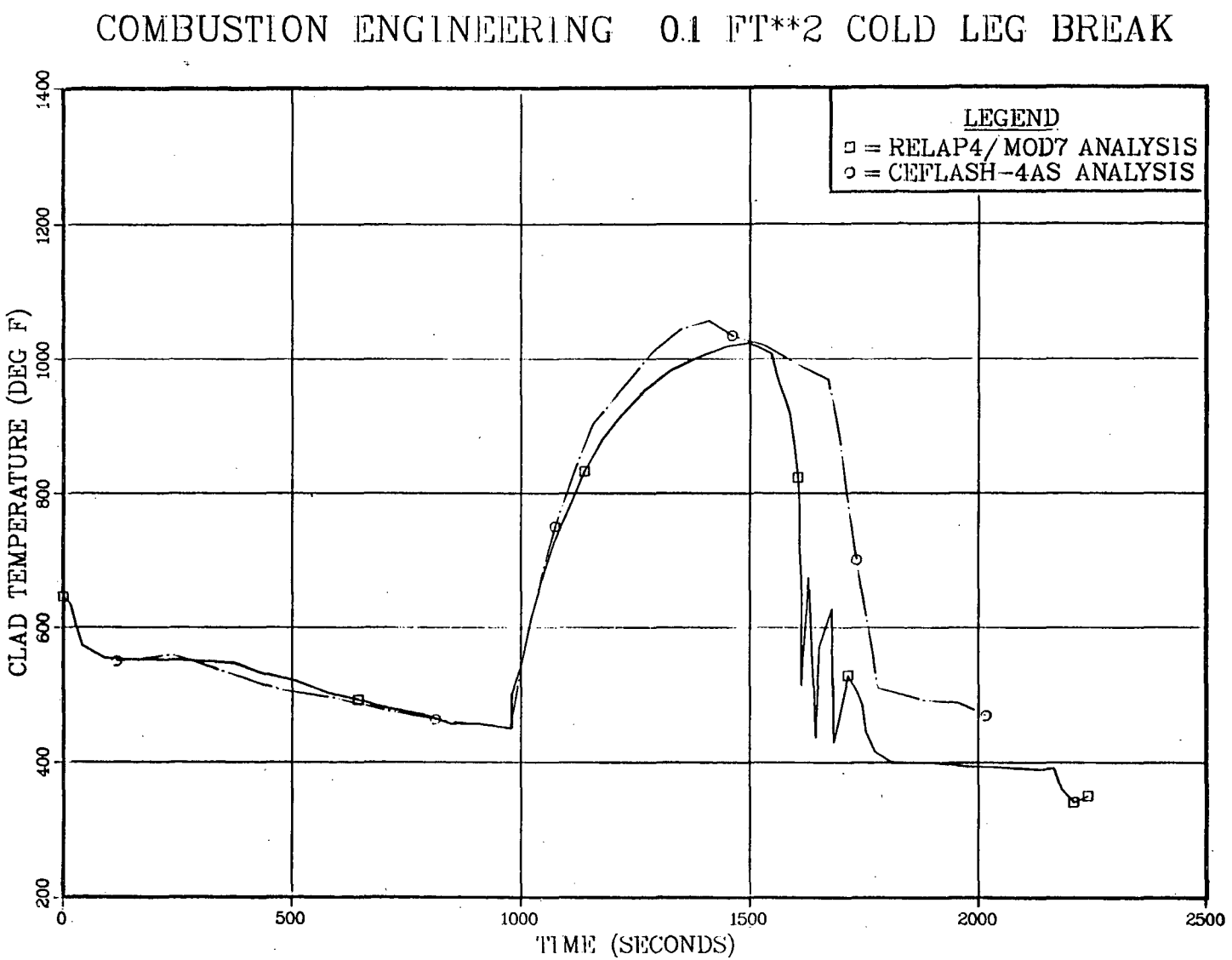

Figure VIII - 5

investigations in this area be performed. The current model reduces the primary pressure by effectively condensing all the steam in the cold leg volume. The magnitude is inconsistent with similar analyses performed by other vendors and with experimentally observed data (i.e., Semiscale test S-02-6).

Figure VIII-4 compares the calculated mixture level in the upper region of the core. The depth and duration of the uncovery are in good agreement. Figure VIII-5 shows the calculated cladding temperature for the average core rod. As a result of the modeling used in both RELAP and CEFLASH-4AS and the assumption of thermal equilibrium within a control volume, the steam above the core mixture level remains saturated. However, superheating could occur above the mixture level in a pressurized water reactor. For the staff analysis, hand calculations indicate that the steam at the top of the core could be superheated by 360°F. Thus, 360°F is an upper bound of the increase in peak cladding temperature that would be calculated if the RELAP4 models and CEFLASH-4AS had been sufficiently detailed to calculate the steam superheat above the mixture level.

Figure VIII-4 shows that, for the staff analysis, the calculated cladding temperature was leveling out at 1500 seconds. The temperature leveled out because the calculated free convection plus radiation heat transfer coefficient, which was above 6.5 BTU/hr-ft^2-°F, was sufficient to remove the decay heat. The peak cladding temperature is sensitive to the value of this heat transfer coefficient. For example, if the free convection heat transfer coefficient were halved, a change expected to be within the uncertainty of the correlation, the calculated peak cladding temperature could have been 1660°F.

The sensitivity of the calculated peak cladding temperature to core nodalization and heat transfer coefficient should be further investigated. A more detailed analysis of a hot pin would be required to obtain the limiting cladding temperature.

The results of the analyses for the 0.02 square feet break with auxiliary feedwater is shown in Figure VIII-6. The general trend of a pressure hang-up system response is shown. The staff analysis shows a depressurization after 2500 seconds as a result of the auxiliary feedwater flow, as described in Section 4.2.3.3 above.

The analyses for a 0.02 square feet break without auxiliary feedwater is shown in Figure VIII-7. For the staff analysis the secondary side of the steam generator U-tubes starts to uncover at 900 seconds. By 2000 seconds, about 1/3 of the heat transfer area was uncovered. However, none of the heat slabs were calculated to dry out (on the secondary side) because of the relatively coarse nodalization. Hand calculations indicate that the rate of repressurization between 900 and 2000 seconds would be about five times larger than shown in the nodalization were fine enough to accurately model the fraction of uncovered heat transfer area. The calculated system pressure would have been about 250 psia higher if a more detailed nodalization had been used.

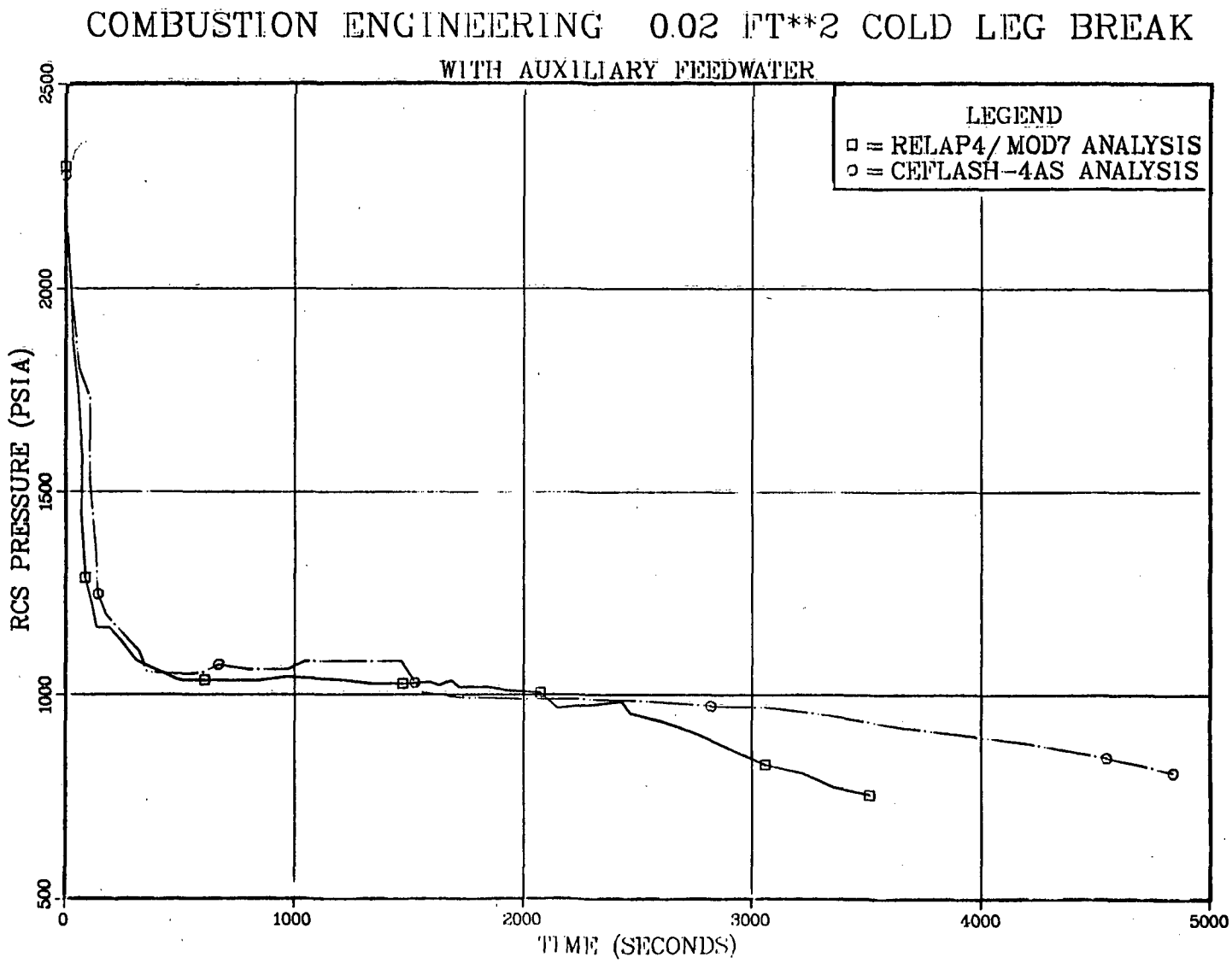

Figure VIII - 6

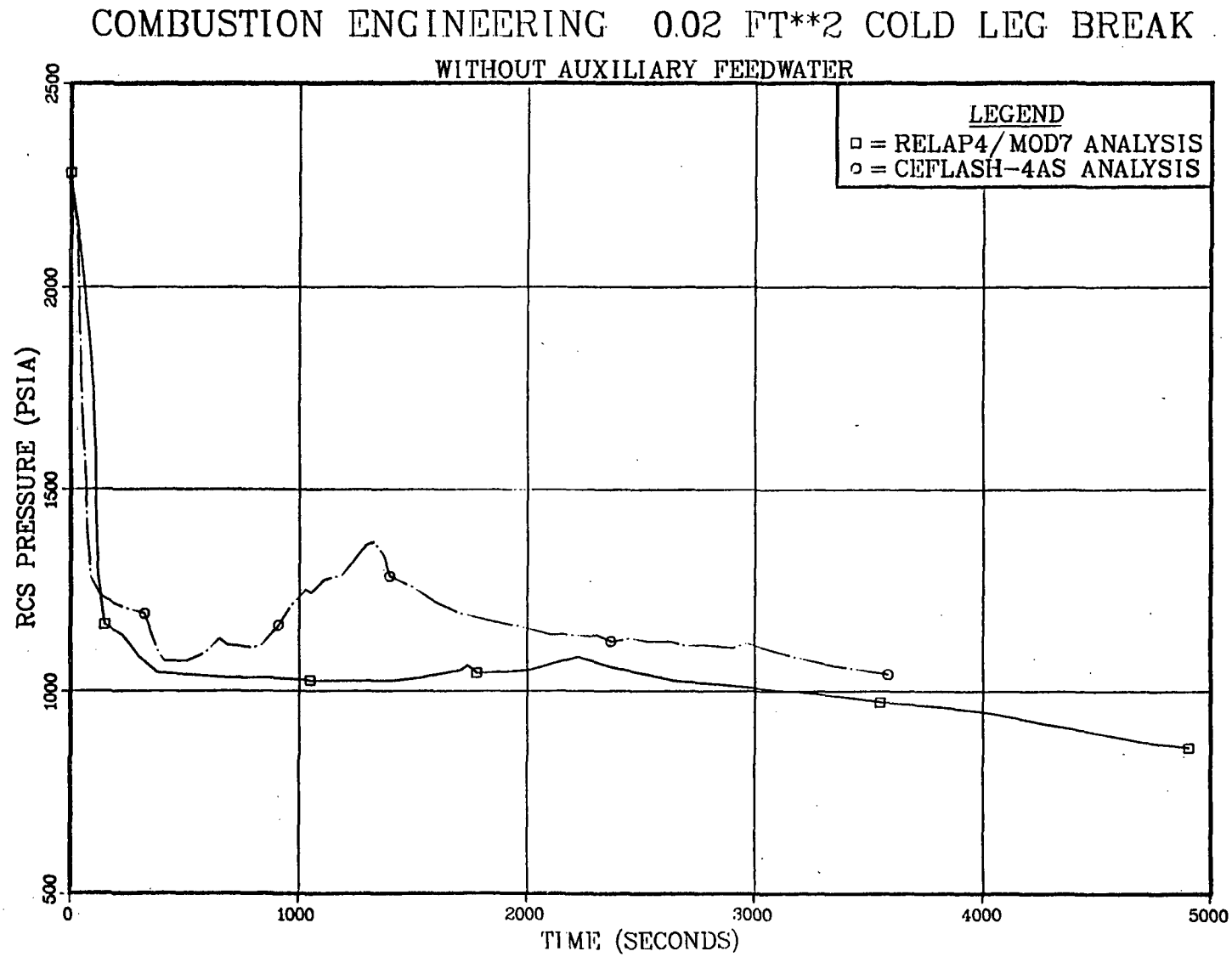

Figure VIII - 7

4.2.4.5 Conclusions

The following conclusions are based on the NRC audit of the analyses performed by Combustion Engineering:

1. The calculated system response to the three break sizes analyzed demonstrates the ability of the computer program CEFLASH-4AS to predict the expected behavior of a depressurization, a pressure hang-up, and a repressurization transient. Reasonable assurance is therefore provided that the calculated system response using CEFLASH-4AS may be used as a basis for guidelines to develop plant emergency procedures to be used to detect and to mitigate the consequences of a small break LOCA.

2. The core uncovery and subsequent heatup calculations performed with the RELAP4 and CEFLASH-4AS computer programs are unrealistic and could result in non-conservative evaluations of the fuel cladding response in these codes. The treatment of steam superheat and steam generation rates in RELAP4 and CEFLASH-4AS could result in a peak clad temperature calculation several hundred degrees too low. Appropriate changes to the programs and to the modeling procedures employed should be made to eliminate the uncertainties in the heatup calculation. Alternatively, CE could demonstrate the acceptability of their method of accounting for superheat by comparing it to evaluations in which superheating of core steam is allowed. The effect of modeling the upper head and upper plenum regions should also be considered. It should be noted however, that peak clad temperatures computed in these codes are not used as the definitive predictions for this parameter. This prediction is made in other more detailed codes designed for this purpose.

3. The effects of safety injection tank injection on the transient performed with both the RELAP4 and the CEFLASH 4AS computer programs should be further investigated to determine the amount of condensation realistically expected, and to determine the effect on heat-up and core uncovery.

4. The model of the steam generator secondary side is important for the evaluation of transients which do not consider auxiliary feedwater. Appropriate changes to the RELAP4 and CEFLASH 4AS programs and to the modeling procedures employed should be made to more realistically represent the steam generator behavior.

4.2.5 Two-Phase Natural Circulation and Accommodation of Loss-of-All Feedwater

As a result of the staff's review of small break analyses, we have concluded that for small breaks which cannot remove all of the decay heat, repressurization of the primary system will occur without secondary system heat removal. For plants with low shutoff head HPI pumps, repressurization above their shutoff head would make them ineffective to supply makeup water to the primary system. Unless action is taken to reduce the

primary system pressure to below the HPI pump shutoff head, core uncovery and fuel damage could result.

The need to provide additional relieving capacity for the primary system has also been identified as part of the anticipated transients without scram (ATWS) study, and more recently as part of the staffs' post-TMI-2 requirements to provide venting capability at the primary system high points.

Loss of secondary heat removal could occur in two ways: loss of all feedwater, and failure to establish or maintain natural circulation.

To date, the PWR industry has not provided any data to experimentally verify their analytical predictions of two-phase natural circulation. Therefore, we will require that verification of the various modes of two-phase natural circulation, and the transitioning between modes predicted by vendor analytical models be verified against appropriate experimental data.

Notwithstanding the ability of the PWR industry to verify their prediction of two-phase natural circulation, the staff believes that a diverse heat removal path, independent of the secondary system is desirable. To this effect the NRC is considering in its TMI-2 Action Plan this and other system changes designed to improve overall plant safety and reliability. Specific Commission policy and schedule will be established subsequent to Commission adoption of this plan.

Conclusions:

(1) The staff finds that the predicted flow through the PORVs has a large uncertainty when the flow is two-phase in composition.

    Because of this high uncertainty, we cannot conclude that for plants with low shutoff head HPI pumps, the primary system can be depressurized to initiate HPI flow in sufficient time to preclude unacceptable core uncovery should secondary heat removal capability be lost. Section 2.1.2 of reference 1 requires that both relief and safety valves be qualified under conditions of both solid water and two-phase flow.

(2) A diverse decay heat removal path, independent of the steam generators is desirable. This desirability stems from the fact that although the probability of losing either all feedwater or natural circulation is considered low, it is nevertheless unquantified and finite.

Recommendations:

(1) The TMI-2 action plan should consider the need for a diverse decay heat removal path independent of the steam generators. Consideration of diverse systems

should include for example, a) increased PORV relieving capacity (b) higher shutoff head HPI pumps, or (c) installation of a high pressure residual heat removal system.

(2) If a system which manually depressurizes the primary system to below the HPI actuation pressure is selected, then the time available to the operator to decide if system depressurization is necessary (i.e., feedwater cannot be restored) should be greater than 20 minutes. We believe that times less than 20 minutes do not provide the operator sufficient time in which to full analyze the situation, and could result in incorrect action being taken.

References

1. TMI-2 Lessons Learned Task Force Status Report and Short-Term Recommendations, NUREG-0578, U.S. Nuclear Regulatory Commission, July 1979.

2. Letter, R.W. Reid (NRC) to All Operating Combustion Engineering Plants transmitting "Requests for Additional Information Regarding Small Break LOCA Analysis", dated June 5, 1979.

3. "Review of Small Break Transients in Combustion Engineering Nuclear Steam Supply Systems" CEN-114-P, July, 1979.

4. F. Forscher and W. M. Bland "Pilot Operated Relief Valve (PORV) Design and Performance, Appendix 19 to Report of The President's Commission on The Accident at Three Mile Island, October 1979.

5. "Generic Assessment of Delayed Reactor Coolant Pump Trip During Small Break Loss-of-Coolant Accidents in Pressurized Water Reactors" NUREG-0623, dated November, 1979.

6. "TMI-2 Lessons Learned Task Force Final Report", NUREG-0585 dated October, 1979.

7. Reactor Safety Study, An Assessment of Accident Risks in U.S. Commercial Nuclear Power Plants, Main Report," WASH-1400, 1965.

8. "Reactor Safety Study, An Assessment of Accident Risks in U.S. Commerical Nuclear Power Plants, Appendix V, "WASH-1400, October 1975.

9. Nuclear Regulatory Commission Issues Policy Statement on Reactor Safety Study and Review by Lewis Panel, United States Nuclear Regulatory Commission Press Release, January 19, 1979.

10. M.R. Beebe, Nuclear Power Plant Operating Experience - 1978, NUREG-0618, October 1979.

11. "Investigation into the March 28, 1979, Three Mile Island Accident by Office of Inspection and Enforcement, Investigative Report No. 50-320/79-10, NUREG-0600, Office of Inspection & Enforcement, U.S. Nuclear Regulatory Commission, August 1979.

12. Letter to J.G. Keppler, NRC, from T.D. Murray, TECO, Supplement to Reportable Occurrence NP-32-77-16 Davis-Besse Nuclear Power Station Unit 1, Date of Occurrence: September 24, 1977, Toledo Edison Company letter, November 14, 1977.

13. CESEC - Digital Simulation of a Combustion Engineering Nuclear Steam Supply System, CENPD-107, Combustion Engineering, Inc., Nuclear Power Systems, Windsor, Connecticut, April 1974.

14. "Anticipated Transients Without Scram for Light Water Reactors," NUREG-0460, April 1978.

15. Lift Frequency of the PORV and safety valves at B&W plants, Florida Power Corporation letter, November 14, 1979.

16. Letter, R.L. Lumpkin (CE) to D.R. Patterson (TVA), "Nuclear Steam Supply Systems TVA X-24 and X-25 Installations TVA Order No. 60-84840; CE Contracts 14074 and 14174" TD-CE-161 dated September 18, 1975.

17. Draft report "CE System 80 - Decay Heat Removal After Small Break" by C. Michelson, undated.

18. Letter, D.R. Patterson (TVA) to R.L. Lumpkin, Jr., (CE), "Proposed Yellow Creek Nuclear Plant; Nuclear Steam Supply Systems; Contract 75K60-84840-2; Letter No. C-655; Very Small Break LOCA-N802-NC" dated July 22, 1977.

19. Letter, R.L. Lumpkin, Jr., (CE) to D.R. Patterson (TVA), "Nuclear Steam Supply Systems; Proposed Yellow Creek Plant; TVA Order No. 60-84840; CE Contracts 14074 and 14174; Very Small Break LOCA" TD-CE-900 dated October 14, 1977.

20. Letter, D.R. Patterson to J. McFarland, "Emergency Core Cooling System Small Break LOCA Analysis" N4M-2-14 (AR) dated April 26, 1978.

21. Anderson, L.E., et.al., "Post-LOCA Long-Term Cooling Evaluation Model" CENPD-254, June, 1977.

22. Wallis, Block, Johnson. "An Analysis of Cold Leg ECC Flow Oscillations" CREARE-TN-196 (August, 1974).

23. Letter, L.P. Leach to R.E. Tiller, "Pressure Oscillations Resulting from ECC Injection LPL-47-77" dated April 20, 1977.

24. "An Evaluation of PWR Steam Generator Water Hammer", NUREG-0291 Creare, Inc. June, 1977.

25. "Task Action Plans for Generic Activities - Category A" NUREG-0371, dated November, 1978.

26. CENPD-133, Supplement 1, "CEFLASH-4A5, A Computer Program for Reactor Blowdown Analysis of Small Break Loss-of-Coolant Accident," August 1974 (Proprietary).

CENPD-133, Supplement 3, "CEFLASH-4A5, A conjunction Program for Reactor Blowdown Analysis of the Small Break Loss-of-Coolant Accident," January 1977 (Proprietary).

27. CENPD-138, "PARCH, A FORTRAN-IV Digital Program to Evaluate Pool Boiling, Axial Rod and Coolant Heatup", August, 1974 (Proprietary).

CENPD-138, Supplement 1, "PARCH, A FORTRAN-IV Digital Program to Evaluate, Pool Boiling Axial Rod and Coolant Heatup", (Modification) February 1975 (Proprietary).

28. Memorandum C.C. Graves to D.F. Ross, Jr., "Pressurizer Power-Operator Relief Valves", dated November 1, 1979.

29. Collier, J.G., Convective Boiling and Condensation, McGraw-Hill, New York (1972)

30. Powell, A.W., "Flow of Subcooled Water Through Nozzles, "WAPD-PT (b), April 1961.

31. Sozzi, G.L., and Sutherland, W.A., "Critical Flow of Saturated and Subcooled Water at High Pressure, "NEDO-13418, July 1975.

32. Simon, U., "Blowdown Flow Rates of Initially Saturated Water, CONF-730304, PP. 172-195, March 1973.

33. Ericson, L., The Marviken Full-Scale Critical Flow Test Interim Reports, Results from Test 1-16, March 1978 - May 1979.

34. C.E. Slater, "Comparison of Predictions from the Reactor Primary System Decompression Code (RELAP-3) with Decompression Data from the Semiscale Blowdown and Emergency Core Cooling (ECC) Project" USAEC Report IN-144 (1970).

35. "Calculation Methods for the CE Small Break LOCA Evaluation Model" CENPD-137, Supplement 1-P January, 1977.

36. Letter, Kniel, (NRC) to Combustion Engineering (A.E. Scherer), "Evaluation of Topical Reports CENPS-133, Supplement 3-P and CENPD-137, Supplement 1-P" dated September 27, 1977.

37. Delaney, H.M., "Calvert Cliffs PWR Evaluation Model-Blowdown Analysis" INEL PG-R-77-18 dated May, 1977.

APPENDIX IX

OPERATOR TRAINING AND OPERATING PROCEDURE CONSIDERATIONS

1. TRAINING

1.1 Finding (Previously stated in NUREG-0560)

Operator training has evolved over the last ten to fifteen years from concentrated on-the-job training programs, with little time allotted to formal training, to the current more formal NRC-approved programs. In addition, the expanded use of simulators has contributed significantly to the quality of operator training.

The staff's Operator Licensing Branch (OLB) has used simulators in its examination of applicants for operator licenses for approximately five years. The OLB finds that such examinations are much more demanding than normal "walk-thru" type examinations. The examinations demand that both the applicant and the examiner have keen understanding of the nuclear system. As a result, a better evaluation of an individual's operating ability can be made by using a simulator. However, the extent of the improvement in evaluation potential in each case is highly dependent on the degree on similarity between the simulator and the plant that the individual will actually operate.

In the past, training programs have underemphasized nonstandard passive conditions such as misaligned systems, undetected failures of engineered safety features (ESF) equipment and multiple failures. Irrespective of the merits of the single failure criterion as a design basis, it should not be considered as a limiting basis for training purposes.

It is generally acknowledged by the staff and the operators themselves that simulator operation is a valuable part of operator training. This consensus is reinforced in EPRI Report No. NP-309; "Operators regard simulators as the best vehicle for obtaining operational training...it helps you to see casualty modes." It is also apparent from TMI-2 that transient recognition by the operator and the operator response based upon his understanding of the plant status are essential to reactor safety. We believe that a primary part of operator training in event recognition and response should be actual "hands-on" operation in response to various plant transients and accidents. This sort of experience can be gained to some degree through actual plant operation and walk throughs, but must include event simulation and actual operator response and observation to be most meaningful.

1.2 Recommendations

Based on our review of operator training at operating reactors, we recommend that:

a. All licensed operators be required to participate in a simulator training program to observe such events as a stuck-open power operated relief valve (PORV) and natural circulation. Training on protecting the core should be emphasized on all plants. This includes the means to recognize that an adequate heat sink, primary system inventory, and intact primary and secondary system exist. Simulator training programs should be reviewed to assure they include the operator errors and equipment failures that contributed to the TMI-2 accident. An evaluation of the simulator control board design and simulated response as compared to the operator's individual response and actual control board design must be made on a case-by-case basis. The differences which may exist must be addressed as part of the operators' training so that negative training feedback will not result.

b. As stated in Appendix VIII, plant simulators should offer, as a minimum, the following small-break LOCA scenarios:

   (a) Continuous depressurization.
   (b) Pressure stabilized at a valve near the secondary system pressure.
   (c) Repressurization.
   (d) Stuck-open PORV.
   (e) Stuck-open letdown valve.

Each of these cases should be simulated with the reactor coolant pumps running and with the pumps not running. The first three events listed above should be simulated for breaks in the hot leg and in the cold leg. In addition to the usual single failures assumed in the ECCS and feedwater systems, the extended (main and auxiliary) loss of all feedwater should be considered (see Section 4.2.2.1 of Appendix VIII).

2. OPERATING PROCEDURES

2.1 Background

Operating and emergency procedures are developed in accordance with Regulatory Guide 1.33, Appendix A, "Quality Assurance Program Requirements (Operation)," and Sections 5.3.2 and 5.3.9 of ANSI 18.7 ANS 3.2, entitled "Administrative Controls and Quality Assurance for Operation of Nuclear Power Plants."

Each normal operating procedure involves the use of checklists and is based on a controlled evaluation giving final conditions as goals to achieve. On the other hand, abnormal and emergency procedures are completely different in that the operator is now confronted with automatic responses for which he may have to take manual actions. Therefore, when writing the abnormal and emergency procedures, consideration should be

given to the real time that it takes for systems to respond and for the operator to perform a manual function. (This was previously stated in NUREG-0560.)

The staff requested the plant emergency procedures for loss of coolant, steam line break, loss of offsite power and loss of feedwater events from all operating reactor licensees. All CE licensees complied with this request with the exception of Maine Yankee and ANO-2. IE bulletins issued by NRC direct licensees to take action on these and other areas.

A review of emergency procedures for six CE supplied power reactor facilities (some prior to TMI-2, some after) indicated deficiencies in providing specific operator guidance to monitor, interpret and respond to critical plant conditions. In general, the procedures fail to guide the operator to monitor and interpret available instrumentation to verify that (1) reactor coolant system inventory is being maintained, (2) the core has adequate flow for heat removal, and (3) the heat sink is available and operating, assuring the capability for heat removal from the reactor coolant system.

Licensee responses to the IE bulletins are currently being evaluated and separate reports will be issued containing the staff's evaluation. Licensees have in general revised or are revising procedures as a result of these IE bulletins.

2.2 Findings

(1) Before the TMI-2 accident, little attention was paid to operational procedures, expecially to emergency procedures and their relationship to the supporting safety analyses. Unambiguous diagnostics and proper precautions and prohibitions were not always considered in the development of procedures.

(2) the NSSS vendor usually does not check a customer's procedures to determine whether the vendor's operational guidelines have been properly incorporated into the plant procedures.

(3) Emergency operating procedures currently in use at operating plants have evolved on an "event-specific" basis. Symptom-based emergency procedures, which are categorized according to general plant symptoms and include the essential features of several separate existing associated peocedures, could make use of the fact that the initial operator responses to the associated events are similar.

The principal advantages of symptom-based emergency procedures over event-specific procedures are (1) the procedures, as a whole, would be simplified significantly and would, therefore, not require the operator to make a detailed diagnosis of te plant conditions prior to consulting an emergency procedure, (2) the total number of emergency procedures with which the operator would have to contend during an emergency would be reduced significantly, and (3) such an exercise would necessitate that licensees look again at their emergency procedures in a more integrated manner.

We believe that the aforementioned advantages would contribute significantly to the operator's ability to maintain the plant in a safe condition in the event of an emergency.

Recommendations

(1) The NRC should become more involved in the review of procedures, including their correlation with the assumptions made in the supporting safety analyses. The procedures should include recognition of the event, precautions, actions, and prohibited actions.

(2) Independent of the NRC review of procedures, the NSS vendor should confirm that the vendor's operational guidelines have been properly incorporated into the customer-licensee's plant operating procedures. Any exceptions which the customer-licensee may have taken to the vendor's guidelines should be documented with appropriate justification. Copies of the correspondence regarding such exceptions should be transmitted to the NRC for information.

(3) Licensees whose emergency procedures have been developed on an event-specific basis should restructure and reformat them on a symptom basis.

3. HUMAN FACTORS

3.1 Findings (From NUREG-0560)

The operator must understand his responsibilities during abnormal and emergency conditions. The design basis for the plant has provided that, in the event of emergencies, suitable actions will be automatically initiated by the safety systems. The operator's initial responsibility is to monitor the parameters of interest and verify that appropriate safety systems have been actuated. If the appropriate actuations have not occurred, the operator must intercede and perform the actions necessary to implement them. The operator is trained to believe his instrumentation. However, he must be trained not to rely on a single instrument, sinch any single indication may be erroneous or misleading under certain conditions. The reason for this precaution was clearly illustrated at TMI-2, where operator attention was focused on the pressurizer level indication. In virtually all situations, other instrumentation can be used to corroborate or refute the validity of a given instrument.

3.2 Recommendation (From NUREG-0560)

The operator should monitor the control board and evaluate all parameters of concern by appropriate checking of other instrumentation. He must perform this cross-check to verify instrument display. If he has additional manual actions to perform, he may reduce his observations on other system parameters that may lead him to "tunnel vision." This recommendation should be implemented in operator training programs.

APPENDIX X

PLANT-SPECIFIC

AUXILIARY FEEDWATER SYSTEMS

1. INTRODUCTION

In order to assure that the evaluation of the auxiliary feedwater (AFW) system was based on design and operational information applicable to the "as-built" AFW system for each plant, the staff submitted to each licensee the request for information included as Annex 1 to this appendix. Each licensee was requested to bring the requested information to a meeting with the staff. This information was reviewed and discussed with each licensee at separate meetings for each plant.

The information provided by each licensee was evaluated by a review team consisting of a systems engineer and a systems reliability engineer, with emphasis given to improving AFW system performance reliability, including identification of dominant failure modes and consideration of the potential for human operators to affect AFW system performance and reliability.

2. OPERATING PLANTS WITH CE-DESIGNED NUCLEAR STEAM SUPPLY SYSTEMS

Completed plant specific AFW system evaluations were sent by the NRC staff to the licensees of W plants in the period October-November 1979. Enclosures 1 of these letters which contained the staff evaluations, are provided in this appendix for reference. The plants and the applicable staff letters are as follows:

Plant Name	Staff Letter
Arkansas Nuclear One, Unit 2;	November 6, 1979
Calvert Cliffs Unit Nos. 1 and 2;	November 7, 1979
Fort Calhoun;	October 22, 1979
Maine Yankee;	October 18, 1979
Millstone 2;	October 22, 1979
Palisades; and	October 30, 1979
St. Lucie Unit 1.	October 17, 1979

3. PLANT SPECIFIC EVALUATIONS

1. ARKANSAS NUCLEAR ONE, UNIT 2

ENCLOSURE 1

X.1 (CE) ARKANSAS 2

EMERGENCY FEEDWATER SYSTEM

X.1.1 System Description

X.1.1.1 Configuration - Overall Design

The emergency feedwater system (EFWS) as shown in Figure 1 consists of primary and secondary sources of water and two emergency feedwater pumps, which feed either or both steam generators (SG). The primary source of EFWS water is a non-seismic Category I condensate storage tank with a 200,000 gallon capacity, 160,000 gallons of which are dedicated to the EFWS by the Technical Specifications. There is also available 100,000 gallons of water from a swing condensate storage tank which is shared by both Unit 2 and Unit 1.

The secondary source of water is the plant service water system, a seismic Category I system, whose water source is either the emergency cooling pond or the Dardanell Reservoir. The service water system is seismic Category I up to and including the suction piping from the emergency cooling pond (the ultimate heat sink). Three service water pumps can draw water from the reservoir (normal mode) or from the emergency cooling pond. The reservoir can also act as a long term water source.

The primary condensate storage tank is normally lined up to supply water to both EFW pumps through manually operated locked open isolation valves. Train A includes the motor-driven pump and Train B includes the turbine-driven pump, each having 100% capacity, and designed to deliver 575 gpm @ 1390 psig. The discharge lines from each pump are cross-connected through two normally closed (NC) manual isolation valves. Upon low suction pressure to the operating pump(s), the suction to the pump is automatically aligned to the secondary water source.

Under the worst transient conditions the licensee estimates that, without the EFW flow, the SG would boil dry in 14 minutes, following loss of main feedwater with reactor trip.

X.1.1.2 Components

Except for the condensate storage tanks, the EFWS components (pumps, valves, and valve operators) and piping are safety grade, seismic Category I and tornado missile protected. The power supplies and instrumentation are Class 1E. Each EFW pump is located in a separate room. Because the pumps are located below the probable maximum flood level, these rooms are watertight with watertight doors to prevent flooding. There are two room coolers in the steam-driven pump room and one room cooler in the motor-driven pump room. The lubricating system for each EFW pump is air-cooled by vanes on its pump shaft.

X.1.1.3 Power Sources

Except for the turbine pump steam admission valves immediately downstream of steam generators A and B, respectively, Train B of the system (turbine-driven pump) obtains control power and power for operating valves from the Division II bus, a Class 1E DC source. The turbine pump steam admission valves receive power from Division I and II Class 1E AC sources, respectively. However, they are locked open with power removed during operation.

Train A (motor-driven pump) is powered by the Division I bus, a Class IE AC source. Except for the two ball valves used to isolate the steam generators which are DC powered, all the valves in Train A are AC powered. The onsite emergency power system consists of two divisions, each being supplied by an independent diesel generator and corresponding DC battery system. Both the diesel generators and battery systems are located in separate seismic Category I rooms.

X.1.1.4 Instrumentation and Controls

X.1.4.1 Controls

Steam generator level is controlled automatically by the engineered safety features actuation system (ESFAS) and can be controlled manually from the control room. Steam generator level indication and alarm are available to the operator in the control room. EFWS flow to the steam generator is automatically terminated when the level reaches a high point, and low steam generator level will automatically reestablish emergency feedwater flow. This on-off type of

flow control is accomplished by opening or closing the ball valves located at the inlet to the steam generators.

X.1.1.4.2 Information Available to Operator

System information available to the operator in the control room to assess the performance of the emergency feedwater system is as follows:

- Position indicating lights for each electrical and pneumatic operated valve.
- Steam generator level
- Steam generator pressure
- EFWS flow indication in each of the four water paths to the steam generators.

X.1.1.4.3 Initiating Signals for Automatic Operation

The EFW pumps and flow path control valves are automatically actuated by the ESFAS whenever any of the following two out of four coincident logic conditions exist:

1. Steam generator (A & B) low level
2. Steam generator (A & B) low pressure
3. Steam generator differential pressure-high (SG-A>SG-B)
4. Steam generator differential pressure-high (SG-B>SG-A)

Main steam line break isolation is accomplished automatically whereas a main feedwater line break is manually isolated.

If steam generator isolation is required, as in the case of a postulated main steam line or feedwater line break, the ESFAS will open only the EFW valves leading to the intact steam generator. A combination of measured variables (level and pressure) for each steam generator are used to determine which steam generator is intact.

X.1.1.5 Testing and Technical Specifications

X.1.1.6 The EFWS is periodically tested and has Limiting Conditions of Operation in accordance with the Technical Specifications as follows:

EMERGENCY FEEDWATER SYSTEM

Two emergency feedwater pumps and associated flow paths shall be OPERABLE with:

a. One motor driven pump capable of being powered from an OPERABLE emergency bus, and
b. One turbine driven pump capable of being powered from an OPERABLE steam supply system.

APPLICABILITY: MODES 1, 2 and 3.

ACTION:

With one emergency feedwater pump inoperable, restore the inoperable pump to OPERABLE status within 72 hours or be in HOT SHUTDOWN within the next 12 hours.

SURVEILLANCE REQUIREMENTS

Each emergency feedwater pump shall be demonstrated OPERABLE:

a. At least once per 31 days by:

1. Verifying that the turbine driven pump develops a discharge pressure of ≥1200 psig at a flow of ≥560 gpm when the secondary steam supply pressure is greater than 865 psig and the pump speed is ≤3600 rpm. The provisions of Specification 4.0.4 are not applicable.

2. Verifying that each valve (manual, power operated or automatic) in the flow path that is not locked, sealed, or otherwise secured in position, is in its correct position.

b. At least once per 18 months during shutdown by:

1. Verifying that each automatic valve in the flow path actuates to its correct position on MSIS or ESFAS test signals.

2. Verifying that the motor driven pump starts automatically upon receipt of an ESFAS test signal.

3. Verifying that the turbine driven pump steam supply MOV opens automatically upon receipt of an ESFAS test signal.

X.1.2 Reliability Evaluation

X.1.2.1 Dominant Failure Modes

X.1.2.1.1 Loss of Main feedwater (LOFW)

No single failure was identified which would make both feedwater trains unavailable. Thus the dominant failure modes were combinations of two independent failures, each failing one subsystem.

X.1.2.1.2 LOFW With Loss of Offsite AC Power

The dominant failure modes are the same as those identified above in the case of loss of main feedwater only.

X.1.2.1.3 LOFW with Only DC Power Available

The dominant failure modes for this event are failure of the turbine driven pump subsystem due to test and maintenance outages, hardware failure, or human error.

Since the motor driven EFW pump would not be available upon loss of all AC power, auxiliary feedwater flow would be dependent on the single turbine driven pump subsystem. Single valve or pump failure, or a manual valve being left in the closed position, or the subsystem being out due to test and maintenance are all significant contributors to the unavailability of the EFWS during this event.

X.1.2.1.4 Potential Interactions

None

X.1.3 Recommendations for this Plant

The short-term recommendations (both generic, denoted by GS, and plant-specific) identified in this section represent actions to improve AFW* system reliability that should be implemented by January 1, 1980, or as soon thereafter as is practicable. In general, they involve upgrading of Technical Specifications or establishing procedures to avoid or mitigate potential system or operator failures. The long-term recommendations (both generic, denoted by GL, and plant-specific) identified in this section involve system design evaluations and/or modifications to improve AFW system reliability and represent actions that should be implemented by January 1, 1981, or as soon thereafter as is practicable.

1.3.1 Short-Term

1. Recommendation GS 6 - The licensee should confirm flow path availability of an AFW system flow train that has been out of service to perform periodic testing or maintenance as follows:

   - Procedures should be implemented to require an operator to determine that the AFW system valves are properly aligned and a second operator to independently verify that the valves are properly aligned.
   - The licensee should propose Technical Specifications to assure that prior to plant startup following an extended cold shutdown, a flow test would be performed to verify the normal flow path from the primary AFW system water source to the steam

* The term AFW system as used in these recommendations applies to the ANO-2 EFW system.

generators. The flow test should be conducted with AFW system valves in their normal alignment.

2. Recommendation GS-7 - The licensee should verify that the automatic start AFW system signals and associated circuitry are safety-grade. If this cannot be verified, the AFW system automatic initiation system should be modified in the short-term to meet the functional requirements listed below. For the longer term, the automatic initiation signals and circuits should be upgraded to meet safety-grade requirements as indicated in Recommendation GL-5.

- The design should provide for the automatic initiation of the auxiliary feedwater system flow.
- The automatic initiation signals and circuits should be designed so that a single failure will not result in the loss of auxiliary feedwater system function.
- Testability of the initiation signals and circuits shall be a feature of the design.
- The initiation signals and circuits should be powered from the emergency buses.
- Manual capability to initiate the auxiliary feedwater system from the control room should be retained and should be implemented so that a single failure in the manual circuits will not result in the loss of system function.
- The alternating current motor-driven pumps and valves in the auxiliary feedwater system should be included in the automatic actuation (simultaneous and/or sequential) of the loads to the emergency buses.

- The automatic initiation signals and circuits shall be designed so that their failure will not result in the loss of manual capability to initiate the AFW system from the control room.

3. Recommendation - The Surveillance Requirements section of the Technical Specications should add pressure and flow acceptance criteria for the periodic (31-day) testing of the motor driven pumps.

X.1.3.2 Additional Short-Term Recommendations

The following additional short-term recommendations resulted from the staff's Lessons Learned Task Force review and the Bulletins and Orders Task Force review of AFW systems at Babcock & Wilcox-designed operating plants subsequent to our review of the AFW system designs at W- and C-E-designed operating plants. They have not been examined for specific applicability to this facility.

1. Recommendation - The licensee should provide redundant level indications and low level alarms in the control room for the AFW system primary water supply to allow the operator to anticipate the need to make up water or transfer to an alternate water supply and prevent a low pump suction pressure condition from occurring. The low level alarm setpoint should allow at least 20 minutes for operator action, assuming that the largest capacity AFW pump is operating.

2. Recommendaton - The licensee should perform a 72-hour endurance test on all AFW system pumps, if such a test or continuous period of operation has not been accomplished to date. Following the 72-hour pump run, the pumps should be shut down and cooled down and then restarted and run for one hour. Test acceptance criteria should include demonstrating that the pumps remain within the design limits with respect to bearing/bearing oil temperatures and vibration and that pump room ambient conditions (temperature, humidity) do not exceed environmental qualification limits for safety-related equipment in the room.

3. Recommendation - The licensee should implement the following requirements as specified by Item 2.1.7.b on page A-32 of NUREG-0578:

   "Safety-grade indication of auxiliary feedwater flow to each steam generator shall be provided in the control room.

   The auxiliary feedwater flow instrument channels shall be powered from the emergency buses consistent with satisfying the emergency power diversity requirements for the auxiliary feedwater system set forth in Auxiliary Systems Branch Technical Position 10-1 of the Standard Review Plan, Section 10.4.9."

4. Recommendation - Licensees with plants which require local manual realignment of valves to conduct periodic tests on one AFW system

train, and there is only one remaining AFW train available for operation should propose the Technical Specifications to provide that a dedicated individual who is in communication with the control room be stationed at the manual valves. Upon instruction from the control room, this operator would realign the valves in the AFW system train from the test mode to its operational alignment.

X.1.3.3 Long-Term

Long-term recommendations for improving the system are as follows:

1. Recommendation - GL-5 - The licensee should upgrade the AFW system automatic initiation signals and circuits to meet safety-grade requirements.

2. Recommendation - The Arkansas Unit 2 AFW system design does not meet the high energy line break criteria in SRP-10.4.9 and Branch Technical Position 10-1; namely, that the AFW system should maintain the capability to supply the required AFW flow to the steam generator(s) assuming a pipe break anywhere in the AFW pump discharge lines concurrent with a single active failure.

   The licensee should evaluate the postulated pipe breaks stated above and (1) determine any AFW system design changes or procedures necessary to detect and isolate the break and direct the required feedwater flow to the steam generator(s) before they boil dry or (2)

describe how the plant can be brought to a safe shutdown condition by use of other systems which would be available following such postulated events.

3. Recommendation - Concern was expressed to the licensee about the capability of the design to isolate a break occurring downstream of the steam admission valve to the turbine-driven pump during AFWS operation concurrent with a single active failure of the DC emergency Division II. Assuming that without DC, the corresponding diesel generator will not be able to start, the break could not be isolated because of the loss of DC and AC power in Division II. The licensee advised that analysis has been performed showing that there is sufficient residual magnetism to flash the diesel generator field and consequently the Division II diesel-generator can be brought up to speed and voltage without the need of DC from the emergency batteries. Thus, the break could be isolated if the failure of the DC emergency Division II does not result also in the loss of AC in the same division. The licensee should submit for staff review the analysis with regard to starting the diesel generator without DC emergency power available.

LEGEND

M-D - MOTOR DRIVEN

T-D - TURBINE DRIVEN

- NORMALLY OPEN

- NORMALLY CLOSED

M - MOTOR OPERATED

SG - STEAM GENERATOR

I,II,III - POWER DIVISIONS

A - ALTERNATING CURRENT

D - DIRECT CURRENT

TB - TURBINE

FO - FAIL OPEN

FC - FAIL CLOSE

FAI - FAIL AS IS

E - ELECTRICALLY OPERATED BALL VALVE

E/H - ELECTRIC/HYDRAULIC OPERATED

NOTES:

*ONLY TWO OF THREE CHANNELS ARE SHOWN IN FIGURE

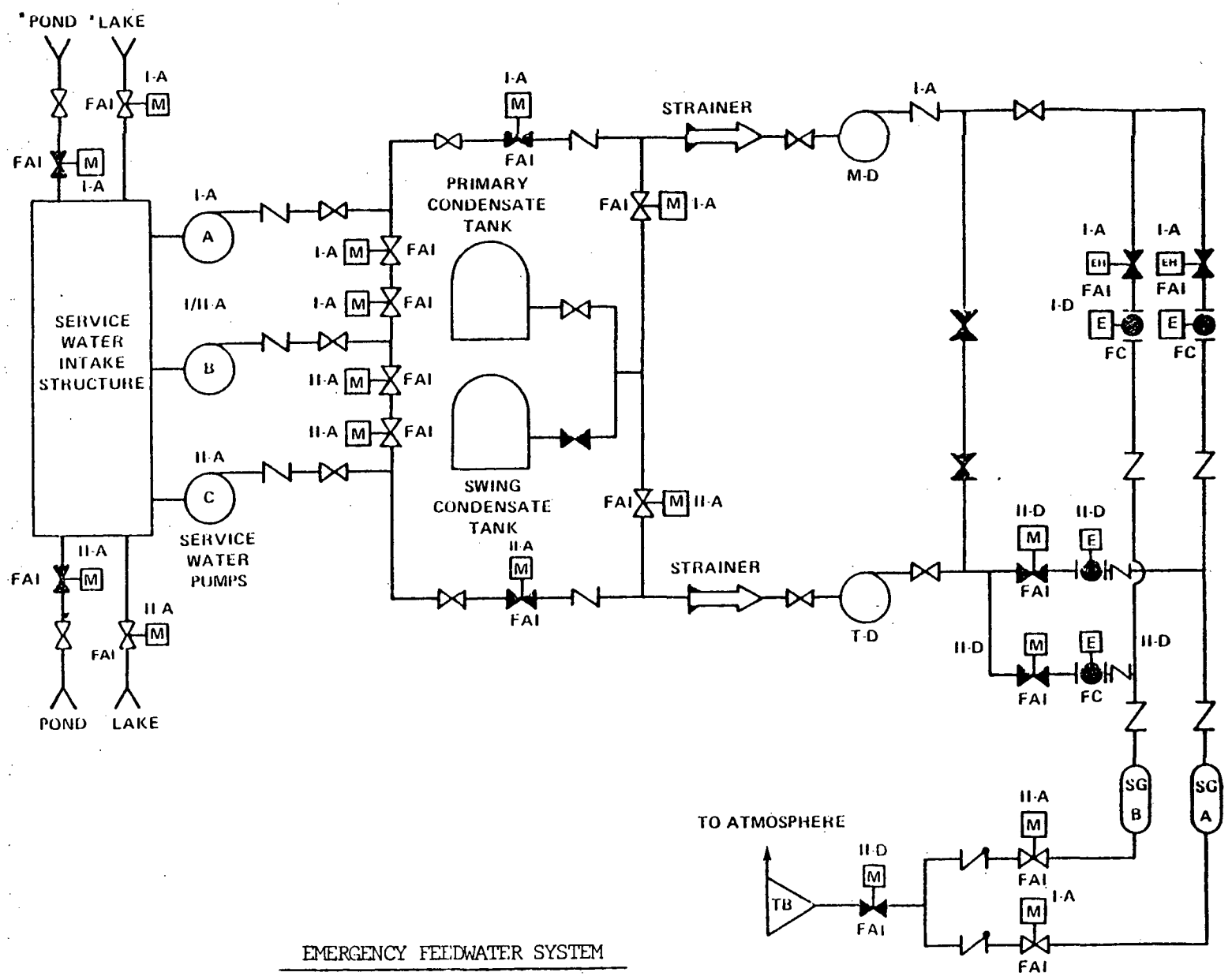

EMERGENCY FEEDWATER SYSTEM

Arkansas 2
Figure 1

2. CALVERT CLIFFS UNITS NOS. 1 AND 2

ENCLOSURE 1

X.2 (C-E) CALVERT CLIFFS UNITS 1 & 2 AUXILIARY FEEDWATER SYSTEM

X.2.1 SYSTEM DESCRIPTION

X.2.1.1 Configuration - Overall Design

Figure 1 is a simplified diagram of the Calvert Cliffs Unit 1 auxiliary feedwater system (AFWS). The Calvert Cliffs Unit 2 AFWS is identical to that of Unit 1. Basically, the AFWS is a manually operated system that includes two steam turbine-driven pumps, each of which can deliver 700 gpm at 1100 psia. Both pumps are located in the auxiliary feedwater pump room.

The normal water supply to each pump is from Condensate Storage Tank No. 12 (CST No. 12), via a common line feeding a branch line to each pump. Flow from each pump discharges into a branch line feeding a common line which in turn branches to each of two steam generators (SG). AFWS flow is controlled by controlling pump speed and by regulating flow through a normally closed (NC) air-operated control valve in the feed line to each SG. Each NC air-operated control valve fails open on loss of air, and each can be bypassed by a loop that includes a normally closed manually operated valve.

AFWS water can be obtained from five sources. The primary water source for both units is CST No. 12 which has a 350,000 gallon capacity, 300,000 gallons of which are dedicated to the AFWS for both units. The licensee stated that this amount of water can cool down both units and will last

six to ten hours, depending on the accident or transient that caused the need for AFWS operation. The normal source of AFWS water flows from CST No. 12 through two normally open manually operated valves and a check valve in a common line which branches to the two pumps. This source of water is designed to seismic Category I requirements and is protected against tornado missiles. The other sources of water are neither designed to seismic Category I requirements nor protected against tornado missiles.

The secondary sources of water consist of two-350,000 gallon tanks, CST No. 11 and CST No. 21 for Unit 1 and Unit 2, respectively. Each tank is designed to serve its associated AFWS, without any cross-connection to the other tank, via a single line. This line includes two normally closed manually-operated valves, and is connected to the common header that feeds both auxiliary feedwater pumps. Although none of this water is dedicated for AFWS service, the licensee estimates that it would take about three to five minutes to line-up either tank to its respective AFWS, if required.

Three additional sources of water are: (i) the 350,000 gallon demineralized water tanks; (ii) the two-500,000 gallon pretreated water storage tanks, of which 600,000 gallons are dedicated for fire protection usage; (iii) the well water system. The licensee estimates that it would take approximately fifteen minutes to manually align the 350,000 gallon demineralized water tanks to CST No. 12. The licensee also estimates that it would take approximately thirty minutes to connect the pretreated water storage tanks to the demineralizer system and that it would require approximately one hour if the demineralizer system is bypassed. In either case,

the pretreated water storage tanks would be connected to CST No. 12, in which case the licensee estimates that all of the above tanks would provide for more than ten hours of AFW supply. The well water system has a pumping capability of 966 gpm, and automatically (or manually, if required) replenishes the pretreated water tanks whenever they reach a low level.

The ability to maintain the AFW system function following certain postulated pipe breaks in the main steam, main feedwater and auxiliary feedwater piping systems was evaluated. In the event of feedwater line breaks inside or outside containment or main steam line breaks downstream of the main steam isolation valve (MSIV), acceptable AFWS capability can be retained by feeding the intact steam generator, provided the control valve to the affected steam generator is maintained closed. However, if a steam line break occurs upstream of the MSIV concurrent with a single active failure, or if a steam line break occurs in the common header to the two AFW pump turbines, even without an active failure, potential problems could result in the containment penetration area. In the former case, if the steam inlet motor operated valve (MOV) from the unaffected steam generator to the turbine-driven auxiliary feedwater pump fails to open, loss of AFWS function will result. This AFWS function can be restored by manually opening the bypass valve around the affected MOV, thereby admitting steam to the turbine-drive AFW pumps and restoring AFWS function. This manual action is possible since the bypass valves have operator extensions which extend into the adjacent room. In the latter case, the AFW pump room must be vented and cooled to permit access for isolating the break

and manually supplying steam to the AFW pump turbines from the other unit or from the auxiliary steam generator. The licensee estimates that these emergency actions can be accomplished in approximately thirty minutes. Except for the pumps, the AFWS equipment is not qualified for operation in the pipe break environment.

Pipe breaks at two locations in the AFWS were considered: (1) at the steam generator, and (2) in the common discharge header between the pumps and the steam generators (the worst case break). In the former case, manual action (e.g., closing the normally open valve in the affected line) can be taken to assure flow to the unaffected steam generator. The licensee estimates that it would take approximately three minutes to perform the required valve operation(s). In the latter case, however, loss of feedwater function will result and persist until the break itself is repaired.

Depending on the initial plant conditions and the event that causes the need for the AFWS, the licensee estimates that the steam generators would boil dry in approximately thirty minutes if the AFWS is not actuated.

X.2.1.2 Components - Design and Classification

The licensee stated that the components and equipment of the AFWS were designed and classified in accordance with the following table.

Component/Equipment	Environmental Qualification	Design Classification	Seismic Category
Pumps & Turbine	High Energy Pipe Break	Safety Related	I
Valves/Actuators	Ambient	"	"
Piping	"	"	"
Main Steam System up to MSIV	"	"	"
Condensate Storage Tank No. 12	"	"	"
Condensate Storage Tanks Nos. 11 & 21	"	Non-Safety Related	Non-Seismic
Demineralized Water Tank	"	"	"
Pretreated Water Tank	"	"	"
Deep Well System	"	"	"
Controls and Instrumentation	"	"	"

X.2.1.3 Power Sources

Steam to drive the AFWS turbine-driven pumps is obtained from the steam generators. Each steam generator can supply steam to either or both steam turbine-driven pumps from its main steam line through a normally closed motor operated valve which fails as-is or a normally closed manual bypass valve into a common header. Each AFW pump takes steam from the common header through a normally open manual valve, a check valve, a DC operated normally open stop valve, and an air operated normally closed throttle valve. An alternate source of steam can be obtained from the steam generators of the other unit or from steam generated by the auxiliary steam generator, which uses an oil fired boiler (aux. stm. gen.). The

alternate source of steam is routed through a normally locked closed manual valve connected between the check valve and stop valve on each pump steam supply line.

The two motor operated steam turbine pump inlet valves are powered from separate emergency AC buses. The turbine control valve and the AFWS flow control valve are air operated fail open valves. The turbine stop valves are powered from the DC buses, and fail in the open position. All control and instrumentation power is from emergency buses which can be energized from the diesel generators.

Upon loss of all station AC, local manual action is required to start the system by opening the steam inlet MOV's.

X.2.1.4 Instrumentation and Controls

X.2.1.4.1 Controls

The following controls are located in the Control Room:

1. Hand indicating controllers for
   a. Turbine Control (throttle) Valve
   b. AFWS Regulating Valve
2. Motor Operated Valves - Open/Close
3. Turbine Trip

All controls except the motor operated valve controls are also located at the Remote Shutdown Panel/AFWS Pump Room.

X.2.1.4.2 Information Available to the Operator

The following alarms are located in the control room:

1. Common Alarm Low Pump Suction and Discharge Pressure
2. Condensate Tank Low Level Alarms
   a. Common Alarm Tank 11 & 12
   b. Common Alarm Tank 12 & 21
3. Steam Generator Low Level Alarms

No alarms are located at the Remote Shutdown Panel or the local stations.

The following indicators are located in the control room:

1. AFW Flow Indicator - one per steam generator
2. Steam Generator Level
3. Condensate Storage Tanks' Level Indication
4. Valve Position Indication for
   a. Motor Operated Inlet Steam Valve
   b. Turbine Control Valve
   c. AFW Regulating Valve
   d. Turbine Stop Valve
5. Pump Discharge Pressure
6. Steam Line Pressure
7. Pump Suction Pressure (Common) to be Removed

The following indicators are located at the Remote Shutdown Station:

1. Steam Generator Level
2. CST Level

3. AFW Regulating Valve Position Indicator
4. Pump Discharge Pressure
5. Steam Line Pressure

X.2.1.4.3 Initiating Signals for Automatic Operation

Since the system is a manually initiated system this section is not applicable. Manual AFW initiation is by a semi-dedicated operator in the control room following any reactor trip. The semi-dedicated operator means that the operator has other duties in the control room until that time when the AFWS is needed, then he is dedicated 100% to operate, control and monitor the system.

X.2.1.5 Testing

The pumps are tested on a monthly basis in a recirculating mode of operation for total dynamic head and vibration, and for bearing temperatures at each refueling. All non-manual valves are stroked and timed monthly. The instrumentation at the remote shutdown panel is checked monthly. The normally closed or opened manual valves are not stroked. When the system has been down for maintenance, the normal monthly tests are performed prior to the system being restored to service.

X.2.1.6 Technical Specifications

The following are the technical specifications for the plant.

AUXILIARY FEEDWATER SYSTEM

LIMITING CONDITION FOR OPERATION

3.7.1.2 At least two steam turbine driven steam generator auxiliary feedwater pumps and associated flow paths shall be OPERABLE.

APPLICABILITY: MODES 1, 2 and 3.

ACTION:

With one auxiliary feedwater pump inoperable, restore at least two auxiliary feedwater pumps to OPERABLE status within 72 hours or be in HOT SHUTDOWN within the next 12 hours.

SURVEILLANCE REQUIREMENTS

4.7.1.2 Each auxiliary feedwater pump shall be demonstrated OPERABLE:

a. At least once per 31 days by:

1. Verifying that the steam turbine driven pump develops a Total Dynamic Head of $\geq$ 2800 ft. on recirculation flow when the secondary steam supply pressure is greater than 800 psig.

2. Verifying that each valve (manual, power operated or automatic) in the flow path that is not locked, sealed, or otherwise secured in position, is in its correct position.

CONDENSATE STORAGE TANK

LIMITING CONDITION FOR OPERATION

3.7.1.3 The No. 12 condensate storage tank (CST) shall be OPERABLE with a minimum contained water volume of 150,000 gallons per unit.

APPLICABILITY: MODES 1, 2 and 3

ACTION:

With the No. 12 condensate storage tank inoperable, within 4 hours either:

a. Restore the CST to OPERABLE status or be in HOT SHUTDOWN within the next 12 hours, or

b. Demonstrate the OPERABILITY of the No. 21 condensate storage tank as a backup supply to the auxiliary feedwater pumps and restore the No. 12 condensate storage tank to OPERABLE status within 7 days or be in HOT SHUTDOWN within the next 12 hours.

SURVEILLANCE REQUIREMENTS

4.7.1.3.1 The No. 12 condensate storage tank shall be demonstrated OPERABLE at least once per 12 hours by verifying the contained water volume is within its limits when the tank is the supply source for the auxiliary feedwater pumps.

4.7.1.3.2 The No. 21 condensate storage tank shall be demonstrated OPERABLE at least once per 12 hours by verifying that the tank contains a minimum of 150,000 gallons of water and by verifying that the flow path

for taking suction from this tank is OPERABLE with the manual valves in this flow path open whenever the No. 21 condensate storage tank is the supply source for the auxiliary feedwater pumps.

X.2.2 RELIABILITY EVALUATION RESULTS

X.2.2.1 Dominant Failure Modes

Failure modes of the AFWS were assessed for three loss of main feedwater transients. The dominant failure modes for each transient type are discussed below.

- Loss of Main Feedwater (LOFW) with Offsite Power Available

  There are two dominant failure modes of the AFWS for this transient, both of which are related to human errors.

  The first human error is failure of the operator to manually initiate the AFWS. Upon a demand for the AFWS, the operator has approximately 30 minutes to actuate AFWS and prevent steam generators from boiling dry, depending on the cause of the transient. Thus, the human error is the failure to actuate AFWS within this time period.

  The second human error is related to the inadvertent closure of either of two manual valves in the single condensate storage tank supply line to the AFWS pumps. Such an inadvertent closure could result from a number of causes, e.g., personnel error in closing the wrong valve during a test procedure, or an error in failing to reopen the valve after maintenance in adjoining parts of the AFWS. Coupled

with this error is the failure of the operator to reopen the valve before damage to the pumps occurs following an AFWS demand. The combination of these errors results in an AFWS failure.

- Loss of MFW with Only Onsite AC Power Available

  This transient is very similar to the transient discussed above. Additional failure modes related to the onsite AC power system were considered; however, these did not have a significant impact. As such the dominant failure modes discussed above are also considered to the applicable for this transient.

- Loss of MFW with Only DC Power Available

  In this transient no AC power, either onsite or offsite, is available. Because of certain AC dependencies, the dominant failure mode is assessed to be the failure of the operator to manually open one of the two steam admission valves to the pump turbine within approximately thirty minutes after the transient. These valves are normally closed motor-operated valves that normally receive power from either the offsite AC power system or the onsite (diesel-generator) AC power system. Since neither of these sources is available in this transient, local manual opening of one of the valves would be required.

X.2.2.2 Principal Dependencies

The principal dependency identified for this AFWS system is that related to human action requirements. For each transient discussed here, human errors are the dominant AFWS failure modes.

Two additional potential dependencies have been noted for the Calvert Cliffs AFWS, both resulting from the physical location of equipment within the plant. These are:

1. Location commonality of AFWS pumps.
   Both AFWS turbine pumps (and some associated valving) are located in a relatively small room sealed with watertight doors. Because of this close proximity of redundant equipment, there exists the potential for total AFWS failure resulting from flooding, missiles, etc., caused by failures within one train or from external causes. (See Recommendations)

2. Location commonality of steam-admission valves.
   Both steam-admission valves for the AFWS pump turbines are located in a common area, the main steam line penetration room. Normal conditions in this area are high temperature and high humidity; thus, there exists some potential for environmentally-caused common mode failures. In addition, because the main steam lines are located just above these valves, the potential environmentally-caused failure of these valves after a steam line break, when AFWS is needed, requires further investigation. (See Recommendations)

X.2.3 Recommendations for this Plant

The short-term recommendations (both generic, denoted by GS, and plant-specific) identified in this section represent actions to improve AFW system reliability that should be implemented by January 1, 1980, or as soon thereafter as is practicable. In general, they involve upgrading of Technical Specifications or establishing procedures to avoid or mitigate potential system or operator failures. The long-term recommendations (both generic, denoted by GL, and plant specific) identified in this section involve system design evaluations and/or modifications to improve AFW system reliability and represent actions that should be implemented by January 1, 1981, or as soon as thereafter as is practicable.

X.2.3.1 Short Term

1. Recommendation GS-2 - The licensee presently, by administrative procedure, locks open single valves or multiple valves in series in the AFW system pump suction piping and locks open other single valves or multiple valves in series that could interrupt all AFW flow. Monthly inspection should be performed to verify that these valves are locked and in the open position. These inspections should be proposed for incorporation into the surveillance recommendations of the plant Technical Specifications. See Recommendation GL-2 for the longer-term resolution of this concern.

2. Recommendation GS-4 - Emergency procedures for transferring to alternate sources of AFW supply should be available to the plant operators. These procedures should include criteria to inform the operator when, and in what order, the transfer to alternate water sources should take place. The following cases should be covered by the procedures:

- The case in which the primary water supply is not initially available. The procedures for this case should include any operator actions required to protect the AFW pumps against self-damage before a water flow is initiated, and,

- The case in which the primary water supply is being depleted. The procedure for this case should provide for transfer to the alternate water sources prior to draining of the primary water supply.

3. Recommendation GS-5 - The as-built plant should be capable of providing the required AFW flow for at least two hours from one AFW pump train independent of any alternating current power source. If manual AFW system initiation or flow control is required following a complete loss of alternating current power, emergency procedures should be established for manually initiating and controlling the system under these conditions. Since the water for cooling of the lube oil for the turbine-driven pump bearings may be dependent on alternating current power, design or procedural changes shall be made to eliminate this dependency as soon as practicable. Until this is done, the emergency procedures should provide for an individual to be stationed at one turbine-driven pump in the event of the loss of all alternating current power to monitor pump bearing and/or lube oil temperatures. If necessary, this operator would operate the turbine-driven pump in an on-off mode until alternating current power is restored. Adequate lighting powered by direct current power sources and communications

at local stations should also be provided if manual initiation and contorl of the AFW system is needed. (See Recommendation GL-3 for the longer-term resolution of this concern.)

4. Recommendation GS-6 - The licensee should confirm flow path availability of an AFW system flow train that has been out of service to perform periodic testing or maintenance as follows:

   - Procedures should be implemented to require an operator to determine that the AFW system valves are properly aligned and a second operator to independently verify that the valves are properly aligned.
   - The licensee should propose Technical Specifications to assure that prior to plant startup following an extended cold shutdown, a flow test would be performed to verify the normal flow path from the primary AFW system water source to the steam generators. The flow test should be conducted with AFW system valves in their normal alignment.

5. Recommendation GS-8 - The licensee should install a system to automatically initiate the AFWS. This system need not, in the short-term, be safety-grade; however, it should meet the criteria listed below, which are similar to Item 2.1.7a of NUREG-0578. For the onger term, the automatic initiation signals and circuits should be upgraded to meet safety-grade requirements as indicated in Recommendation GL-1.

- The design should provide for the automatic initiation of the auxiliary feedwater system flow.
- The automatic initiation signals and circuits should be designed so that a single failure will not result in the loss of auxiliary feedwater system function.
- Testability of the initiating signals and circuits should be a feature of the design.
- The initiating signals and circuits should be powered from the emergency buses.
- Manual capability to initiate the auxiliary feedwater system from the control room should be retained and should be implemented so that a single failure in the manual circuits will not result in the loss of system function.
- The alternating current motor-driven pumps and valves in the auxiliary feedwater system should be included in the automatic actuation (simultaneous and/or sequential) of the loads to the emergency buses.
- The automatic initiation signals and circuits should be designed so that their failure will not result in the loss of manual capability to initiate the AFW system from the control room.

6. Recommendation - The licensee should propose modifications to Technical Specifications to require that manual valves that are normally closed or open will be tested periodically.

X.2.3.2 Additional Short-Term Recommendations

The following additional short-term recommendations resulted from the staff's Lessons Learned Task Force review and the Bulletins and Orders Task Force review of AFW systems at Babcock & Wilcox-designed operating plants subsequent to our review of the AFW systems designs at W- and C-E-designed operating plants. They have not been examined for specific applicability to this facility.

1. Recommendation - The licensee should provide redundant level indications and low level alarms in the control room for the AFW system primary water supply to allow the operator to anticipate the need to make up water or transfer to an alternate water supply and prevent a low pump suction pressure condition from occurring. The low level alarm setpoint should allow at least 20 minutes for operator action, assuming that the largest capacity AFW pump is operating.

2. Recommendation - The licensee should perform a 72-hour endurance test on all AFW system pumps, if such a test or continuous period of operation has not been accomplished to date. Following the 72-hour pump run, the pumps should be shut down and cooled down and then restarted and run for one hour. Test acceptance criteria should include demonstrating that the pumps remain within design limits with respect to bearing/bearing oil temperatures and vibration and that pump room ambient conditions (temperature, humidity) do not exceed environmental qualification limits for safety-related equipment in the room.

3. Recommendation - The licensee should implement the following requirements as specified by Item 2.1.7.b on page A-32 of NUREG-0578:

   "Safety-grade indication of auxiliary feedwater flow to each steam generator shall be provided in the control room.

   The auxiliary feedwater flow instrument channels shall be powered from the emergency buses consistent with satisfying the emergency power diversity requirements for the auxiliary feedwater system set forth in Auxiliary Systems Branch Technical Position 10-1 of the Standard Review Plan, Section 10.4.9."

4. Recommendation - Licensees with plants which require local manual realignment of valves to conduct periodic tests on one AFW system train, and there is only one remaining AFW train available for operation should propose Technical Specifications to provide that a dedicated individual who is in communication with the control room be stationed at the manual valves. Upon instruction from the control room, this operator would realign the valves in the AFW system train from the test mode to its operational alignment.

X.2.3.3 Long-Term

Long-term recommendations for improving the systems are as follows:

1. Recommendation - GL-1 - Licensees with plants having a manual starting AFW system should install a system to automatically initiate the AFW system flow. This system and associated automatic initiation signals

should be designed and installed to meet safety-grade requirements. Manual AFW system start and control capability should be retained with manual start serving as backup to automatic AFW system initiation.

2. Recommendation - GL-2 - Licensees with plants in which all (primary and alternate) water supplies to the AFW systems pass through valves in a single flow path should install redundant parallel flow paths (piping and valves).

   Licensees with plants in which the primary AFW system water supply passes through valves in a single flow path, but the alternate AFW system water supplies connect to the AFW system pump suction piping downstream of the above valve(s) should install redundant valves parallel to the above valve(s) or provide automatic opening of the valve(s) from the alternate water supply upon low pump suction pressure.

   The licensee should propose Technical Specifications to incorporate appropriate periodic inspections to verify the valve positions.

3. Recommendation - GL-3 - At least one AFW system pump and its associated flow path and essential instrumentation should automatically initiate AFW system flow and be capable of being operated independently of any alternating current power source for at least two hours. Conversion of direct current power to alternating current is acceptable.

4. Recommendation - The motor operated steam inlet valves and other equipment affected by the environmental effects of the main steam and feed line breaks discussed in section 2.1.1 and 2.2.4 should be qualified to the environmental conditions that will be present.

5. Recommendations - The licensee should evaluate the following concerns:

   a) The AFW pump discharge lines and turbine driven AFW steam supply lines combine into different single lines through which all AFW water or steam must flow. (See Figure 1). A pipe break in either of these single flow paths would cause loss of the entire AFW function.

   b) The Calvert Cliffs AFW systems do not meet the high energy line break criteria in SRP 10.4.9 and Branch Technical Position 10-1; namely, that the AFW system should maintain the capability to supply the required flow to the steam generator(s) assuming a pipe break anywhere in the AFW pump discharge lines concurrent with a single active failure.

The licensee should evaluate the postulated pipe breaks stated above and (1) determine any AFW system design changes or procedures necessary to detect and isolate the break and direct the required feedwater flow to the steam generator(s) before they boil dry or (2) describe how the plant can be brought to a safe shutdown condition by use of other systems which would be available following such postulated events.

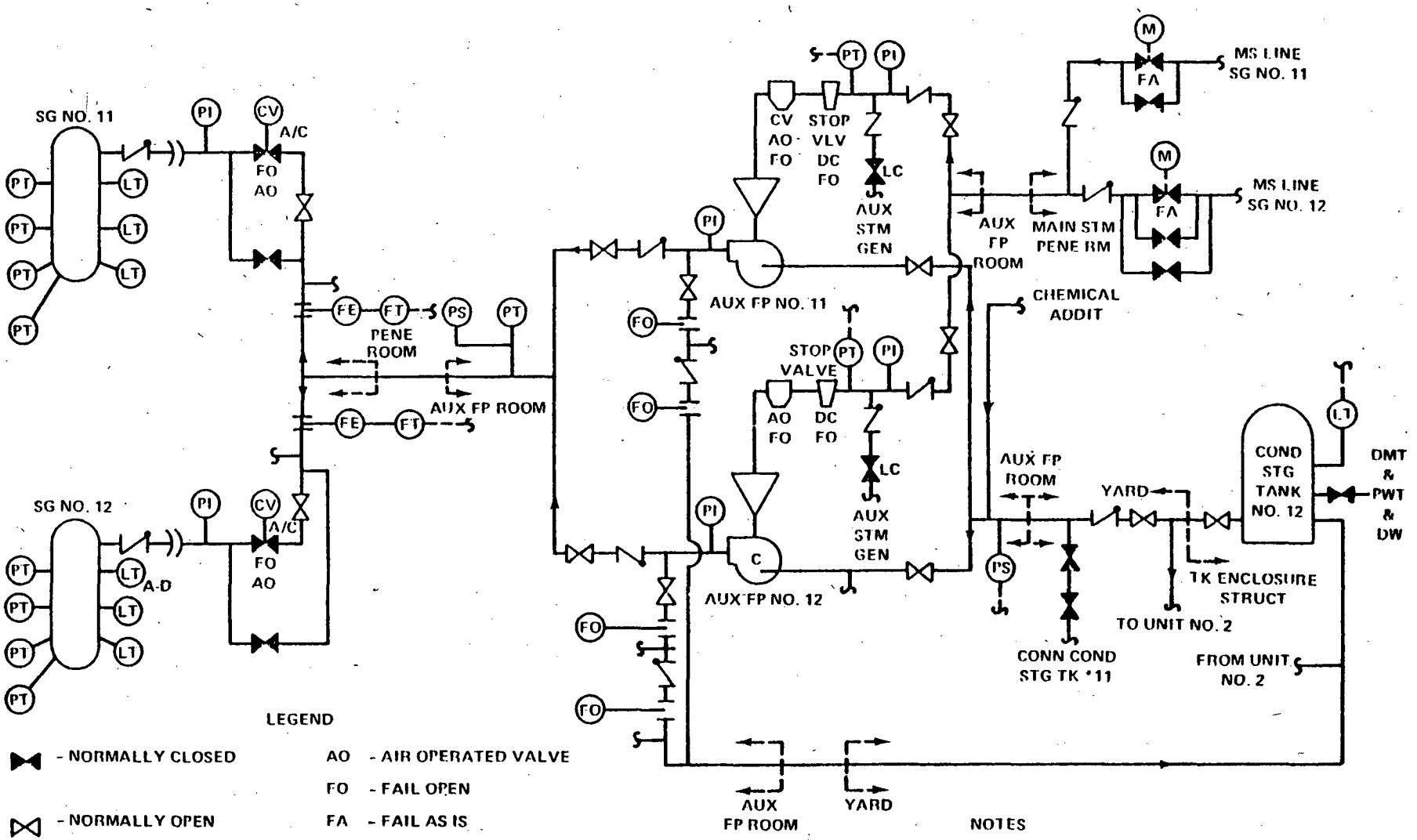

LEGEND

- NORMALLY CLOSED
- NORMALLY OPEN
- MOTOR OPERATED VALVE

AO - AIR OPERATED VALVE
FO - FAIL OPEN
FA - FAIL AS IS
DC - D/C OPERATED VALVE
DMT - DEMINERALIZED WATER TANK
PWT - PRETREATED WATER TANK
DW - WELL SYSTEM

NOTES

SINGLE UNIT SHOWN – OTHER UNIT TYPICAL

Auxiliary Feedwater System
Calvert Cliffs, Unit 1 & 2
Figure 1

3. FORT CALHOUN

ENCLOSURE 1

X.3 (CE) FT. CALHOUN

AUXILIARY FEEDWATER SYSTEM

X.3.1 System Description

X.3.1.1 Configuration, Overall Design

A simplified diagram of the auxiliary feedwater system (AFWS) for the Ft. Calhoun plant is shown in Figure 1. The AFWS includes a steam turbine-driven pump and a motor-driven pump, each rated 260 gpm @ 2400 ft. head. Each pump is capable of cooling the plant down to the temperature where the shutdown cooling system (SCS) can be used to continue safe plant shutdown. The pumps are located in the seismic Category I auxiliary building, and are protected against internal and external flooding. Piping interconnections are provided to permit either AFW pump to feed directly either or both steam generators through the normal AFW flow path. AFW flow can also be directed to the main feedwater lines upstream of the main feedwater isolation valves.

The primary water supply for the AFWS is the seismic Category I emergency feedwater storage tank (EFST) having a capacity of 63,000 gallons. The EFST is required by Technical Specifications to contain at least 55,000 gallons of water whenever the reactor coolant system (RCS) temperature is above 300°F. The licensee states that this is adequate to maintain hot standby for 8 hours.

The EFST water level is automatically maintained by the condensate system (CS). If the CS is not available, the EFST level will be maintained by either the demineralized water from the water treatment plant or the outside condensate storage tank. In addition, emergency makeup water supply to the EFST may be obtained from the fire main of the fire protection system. EFST water level indicators are provided which will initiate, alarm and annunciate in the main control room on high or low water level.

X.3.1.2 Components - Design Classifications

The AFWS, including instrumentation and control and primary water source, is classified as an engineered safety features system and designed according to seismic Category I and safety grade requirements.

X.3.1.3 Power Sources

The steam turbine driven pump receives steam from either SG from a point upstream of each main steam isolation valve (MSIV) via direct current (DC) power solenoid air operated valves and exhausts directly to the atmosphere. (See Figure 1 for valve(s) normal position and position upon loss of power or air.)

The motor-driven pump receives power from a 4160V vital bus. Upon loss of offsite power, the operator must connect the motor-driven pump train to an emergency diesel generator bus.

X.3.1.4 Instrumentation and Controls

X.3.1.4.1 Controls

The instrumentation and controls within the AFWS have been designed as safety grade and seismic Category I components. The systems' safety function will not be affected by a single failure, since redundancy has been provided. The SG water level is manually controlled by the operator using either one of the DC solenoid air operated valves which are located outside the containment. Manual operation of these valves can be performed locally on loss of compressed air. The pumps (turbine driven and motor driven) can be controlled remotely from the control room or at the auxiliary feedwater control panel.

X.3.1.4.2 Information Available to Operator

The important AFWS information available to the operator includes pump operability (suction flow, discharge, flow), EFST level and temperature. SG flow, SG water level and control valve position indication are also provided in tne control room.

X.3.1.4.3 Initiating Signals for Automatic Operations

Both AFW pumps will automatically start on trip of the last operating main feedwater pump. On loss of offsite power, only the turbine driven pump will start automatically; the motor driven pump can be started manually after connecting the motor to an emergency diesel generator bus[1]. AFW flow from the turbine-driven pump will initiate automatically upon loss of all

[1] The licensee is considering the possibility of automating the electric AFW subsystem for the case where offsite AC would be lost.

onsite and offsite AC power. In this event, the steam supply and AFW flow control valves in the turbine pump train open. Also, the turbine pump lube oil is cooled by recirculated AFW flow.

X.3.1.4.4 Testing

The AFWS is tested every 31 days in accordance with technical specification requirements. The system is tested using the pump recirculating line and noting pump pressure and flow. The instrumentation system is checked periodically, in accordance with the technical specifications, each shift, monthly or during refueling outages. AFW flow instrumentation channels for the SGs, flow indicating controls for the AFW pumps, and level indication and level alarm switches are calibrated annually.

In addition to the above periodic testing, the licensee routinely uses the AFWS for shutdown and startup operations. This practice augments the detection of malfunctions in the Ft. Calhoun AFWS periodic surveillance testing.

X.3.1.4.5 Technical Specifications

The Limiting Conditions for Operation stipulate that the reactor coolant system shall not be heated above 300°F unless the following conditions are met:

1. Both auxiliary feedwater pumps are operable. One of the auxiliary feedwater pumps may be inoperable for 24 hours provided that the redundant component shall be tested to demonstrate operability.

2. A minimum of 55,000 gallons of water in the emergency feedwater storage tank and a backup water supply to the emergency feedwater storage tank from the Missouri River by the fire water system.
3. All valves, interlocks and piping associated with the above components required to function during accident conditions are operable.

X.3.2 Reliability Evaluation Results

X.3.2.1 Dominant Failure Modes

The Ft. Calhoun AFWS consists of two subsystems, one includes a motor driven pump and the other a steam turbine driven pump. Either of these two subsystems delivering water to one of the two steam generators provides for adequate decay heat removal given the three loss of main feedwater events considered.

The following failure modes were found to dominate the demand unavailability of the Ft. Calhoun AFWS.

- Loss of Feedwater (LOFW) with Offsite AC Power Available

The dominant failure mode (~ 80% contribution) identified for the Ft. Calhoun AFWS was inadvertent closure of the single, manually operated AFW pump suction valve from the EFST that could make the redundant AFWS subsystems inoperative. Although this valve is located in a security area and is visible and locked open, the licensee plans to further strengthen the administrative checking on this valve and its position status, (i.e., a visual check would be made and logged as part of a routine data logging procedure performed for the turbine and steam plant). This added procedure

would result in a check of the valve position status at least several times each day.

The AFWS for Ft. Calhoun is used to supply feedwater to the SG's for routine shutdowns and startups. This routine use is over and above that usage resulting from actual demands and testing demands and serves to further confirm the availability of a flow path through the single locked open pump suction valve. It is considered, however, that even with the above valve status verification procedure in place, this single suction valve remains a major point of vulnerability in the Ft. Calhoun AFWS. This is because all emergency feedwater sources (primary and backup) must pass through this single valve and flow blockage (e.g., disengaged valve gate/disc) could make the AFWS inoperative.

An additional potential vulnerability of the Ft. Calhoun AFWS design was observed; however, this vulnerability was not assessed in detail during this review. This potential vulnerability is associated with the discharge piping cross-connection between the two AFWS subsystems that includes two normally open manual valves (FW 744 and FW 745). This cross-connection was installed by the licensee subsequent to the FSAR review to provide an alternate way to supply AFW flow via the main feedwater system. A single passive failure in this cross-connection would require local operator action to manually close either FW 744 or FW 745 to isolate the two subsystems from one another. The licensee should re-evaluate the position of these valves considering a postulated break in the cross-connection (see short-term recommendation number 6.)

- LOFW with only Onsite AC Power Available

The Ft. Calhoun vital electrical buses employ two emergency diesel generators (EDG) with load shedding features. The motor-driven pump train of the AFWS can be powered by either EDG unit; however, since it is normally connected to an electrical bus supplied by offsite power, it is shed from the bus on loss of offsite power. As soon as the EDG's pick up their safety loads, the plant operator is required to connect the motor-driven pump to one of the EDGs by switching action in the control room. Assessment of this human dependency and its contribution to the overall AFWS unavailability indicates a small increase relative to the above LOFW transient event ($\leq$ 20%). The single valve in the AFWS suction line remains as the dominant fault contributor.

- LOFW With Only DC Power Available

In this event, the turbine-driven pump train portion of the Ft. Calhoun AFWS would start automatically. The operator would be expected to provide backup in case the solenoid operated valves (SOVs) in the steam admission line to the turbine-driven pump fail to open. The dominant contributors to AFWS unavailability in this event were:

-Allowed test and maintenance outage times (~ 40%)

-Hardware faults (turbine pumps and manual valves around the turbine pumps) (~50%)

X.3.2.2 Principal Dependencies Identified

1. The single locked open AFW pump suction valve (FW-339) which feeds both AFWS pumps.

2. The potential common mode vulnerability in the cross-connection installed by the licensee due to valves FW 744 and FW 745 being left normally open. Failure in the cross-connection requires local manual actions to correct.

3. The operator being required to connect the motor-driven pump train of AFWS to an EDG bus for the LOFW transient with only onsite AC power available.

X.3.3 Recommendations for this Plant

The short-term recommendations (both generic, denoted by GS, and plant specific) identified in this section represent actions to improve AFW system reliability that should be implemented by January 1, 1980, or as soon thereafter as is practicable. In general, they involve upgrading of Technical Specifications or establishing procedures to avoid or mitigate potential system or operator failures. The long-term recommendations (both generic, denoted GL, and plants specific) identified in this section involve system design evaluations and/or modifications to improve AFW system reliability and represent actions that should be implemented by January 1, 1981, or as soon thereafter as is practicable.

X.3.3.1 Short-Term

1. Recommendation GS-2 - The licensee should lock open single valves or multiple valves in series in the AFW system pump suction piping and lock open other single valves or multiple valves in series that could interrupt all AFW flow. Monthly inspections should be performed to

verify that these valves are locked and in the open position. These inspections should be proposed for incorporation into the surveillance requirements of the plant Technical Specifications. See Recommendation GL-2 for the longer term resolution of this concern.

2. Recommendation GS-4 - Emergency procedures for tranferring to alternate sources of AFW supply should be available to the plant operators. These procedures should include criteria to inform the operator when, and in what order, the transfer to alternate water sources should take place. The following cases should be covered by the procedures:

- The case in which the primary water supply is not initially available. The procedures for this case should include any operator action required to protect the AFW system pumps against self-damage before water flow is initiated;
  and,

- The case in which the primary water supply is being depleted. The procedure for this case should provide for transfer to the alternate water sources prior to draining of the primary water supply.

3. Recommendation GS-6 - The licensee should confirm flow path availability of an AFW system flow train that has been out of service to perform periodic testing or maintenance as follows:

- Procedures should be implemented to require an operator to determine that the AFW system valves are properly aligned and a second operator to independently verify that the valves are properly aligned.
- The licensee should propose Technical Specifications to assure that prior to plant startup following an extended cold shutdown, a flow test would be performed to verify the normal flow path from the primary AFW system water source to the steam generators. The flow test should be conducted with AFW system valves in their normal alignment.

Recommendation GS-7 - The licensee should verify that the automatic start AFW system signals and associated circuitry are safety-grade. If this cannot be verified, the AFW system automatic initiation system should be modified in the short-term to meet the functional requirements listed below. For the longer term, the automatic initiation signals and circuits should be upgraded to meet safety-grade requirements as indicated in Recommendation GL-5.

- The design should provide for the automatic initiation of the auxiliary feedwater system flow.
- The automatic initiation signals and circuits should be designed so that a single failure will not result in the loss of auxiliary feedwater system function.
- Testability of the initiation signals and circuits shall be a feature of the design.

- The initiation signals and circuits should be powered from the emergency buses.
- Manual capability to initiate the auxiliary feedwater system from the control room should be retained and should be implemented so that a single failure in the manual circuits will not result in the loss of system function.
- The alternating current motor-driven pumps and vaves in the auxiliary feedwater system should be included in the automatic actuation (simultaneous and/or sequential) of the loads to the emergency buses.
- The automatic initiation signals and circuits shall be designed so that their failure will not result in the loss of manual capabilty to initiate the AFW system from the control room.

5. The licensee should prepare a procedure that assures that the operator manually connects the motor-driven pump train to the bus powered by the emergency diesel generator following loss of offsite power.

6. Since values FW 744 and 745 in one of the AFW pump discharge headers are normally open (see Figure 1), a postulated break in this header would cause loss of the capability to provide AFW flow to both steam generators. The licensee should re-evaluate the position of these valves considering such a postulated pipe break to revise the valve alignment to reduce the impact of such an event on the AFW capability (e.g., close valves FW 744 and FW 745).

X.3.3.2 Additional Short-Term Recommendations

The following additional short-term recommendations resulted from the staff's Lessons Learned Task Force review and the Bulletins and Orders Task Force review of AFW systems at Babcock & Wilcox-designed operating plants subsequent to our review of the AFW system designs at W- and C-E-designed operating plants. They have not been examined for specific applicability ot this facility.

1. Recommendation - The licensee should provide redundant level indications and low level alarms in the control room for the AFW system primary water supply to allow the operator to anticipate the need to make up water or transfer to an alternate water supply and prevent a low pump suction pressure condition from occurring. The low level alarm setpoint should allow at least 20 minutes for operator action, assuming that the largest capacity AFW pump is operating.

2. Recommendation - The licensee should perform a 72-hour endurance test on all AFW system pumps, if such a test or continuous period of operation has not been accomplished to date. Following the 72-hour pump run, the pumps should be shut down and cooled down and then restarted and run for one hour. Test acceptance criteria should include demonstrating that the pumps remain within design limits with respect to bearing/bearing oil temperatures and vibration and that pump room ambient conditions (temperature, humidity) do not exceed evironmental qualification limits for safety-related equipment in the room.

3. Recommendation - The licensee should implement the following requirements as specified by Item 2.1.7.b on page A-32 of NUREG-0578: "Safety-grade indication of auxiliary feedwater flow to each steam generator shall be provided in the control room.

   The auxiliary feedwater flow instrument channels shall be powered from the emergency buses consistent with satisfying the emergency power diversity requirements for the auxiliary feedwater system set forth in Auxiliary Systems Branch Technical Position 10-1 of the Standard Review Plan, Section 10.4.9."

4. Recommendation - Licensees with plants which require local manual realignment of valves to conduct periodic tests on one AFW system train, and there is only one remaining AFW train available for operation,should propose Technical Specifications to provide that a dedicated individual who is in communication with the control room be stationed at the manual valves. Upon instruction from the control room, this operator would realign the valves in the AFW system train from the test mode to its operational alignment.

X.3.3.3 Long-Term

Long-term recommendations for improving the system are as follows:

1. Recommendation - GL-1 - Licensees with plants having a manual starting AFW system should install a system to automatically initiate the AFW system flow. This system and associated automatic initiation signals

should be designed and installed to meet safety-grade requirements. Manual AFW system start and control capability should be retained with manual start serving as backup to automatic AFW system initiation. (Note: This recommendation is applicable to the motor-driven AFW pump subsystem upon the loss of offsite AC power).

2. Recommendation GL-2 - Licensees with plants in which all (primary and alternate) water supplies to the AFW systems pass through valves in a single flow path should install redundant parallel flow paths (piping and valves).

   Liensees with plants in which the primary AFW system water supply passes through valves in a single flow path, but the alternate AFW system water supplies connect to the AFW system pump suction piping downstream of the above valve(s) should install redundant valves parallel to the above valve(s) or provide automatic opening of the valve(s) from the alternate water supply upon low pump suction pressure. The licensee should propose Technical Specifications to incorporate appropriate periodic inspections to verify the valve positions.

3. Recommendation - GL-5 - The licensee should upgrade the AFW system automatic initiation signals and circuits to meet safety-grade requirements.

4. Recommendation - The licensee should evaluate the following concerns:

a. The discharge lines of both AFW pumps combine into a single header through which all AFW water must flow. A pipe break in this single flow path could result in the loss of the entire AFW system function.

b. The Ft. Calhoun AFW system design does not meet the high energy line break criteria in SRP 10.4.9 and Branch Technical Position 10-1; namely, that the AFW system should maintain the capability to supply the required AFW flow to the steam generator(s) assuming a pipe break anywhere in the AFW pump discharge lines concurrent with a single active failure.

The licensee should evaluate the postulated pipe breaks stated above and (1) determine any AFW system design changes or procedures necessary to detect and isolate the break and direct the required feedwater flow to the steam generator(s) before they boil dry or (2) describe how the plant can be brought to a safe shutdown condition by use of other systems which would be available following such postulated events.

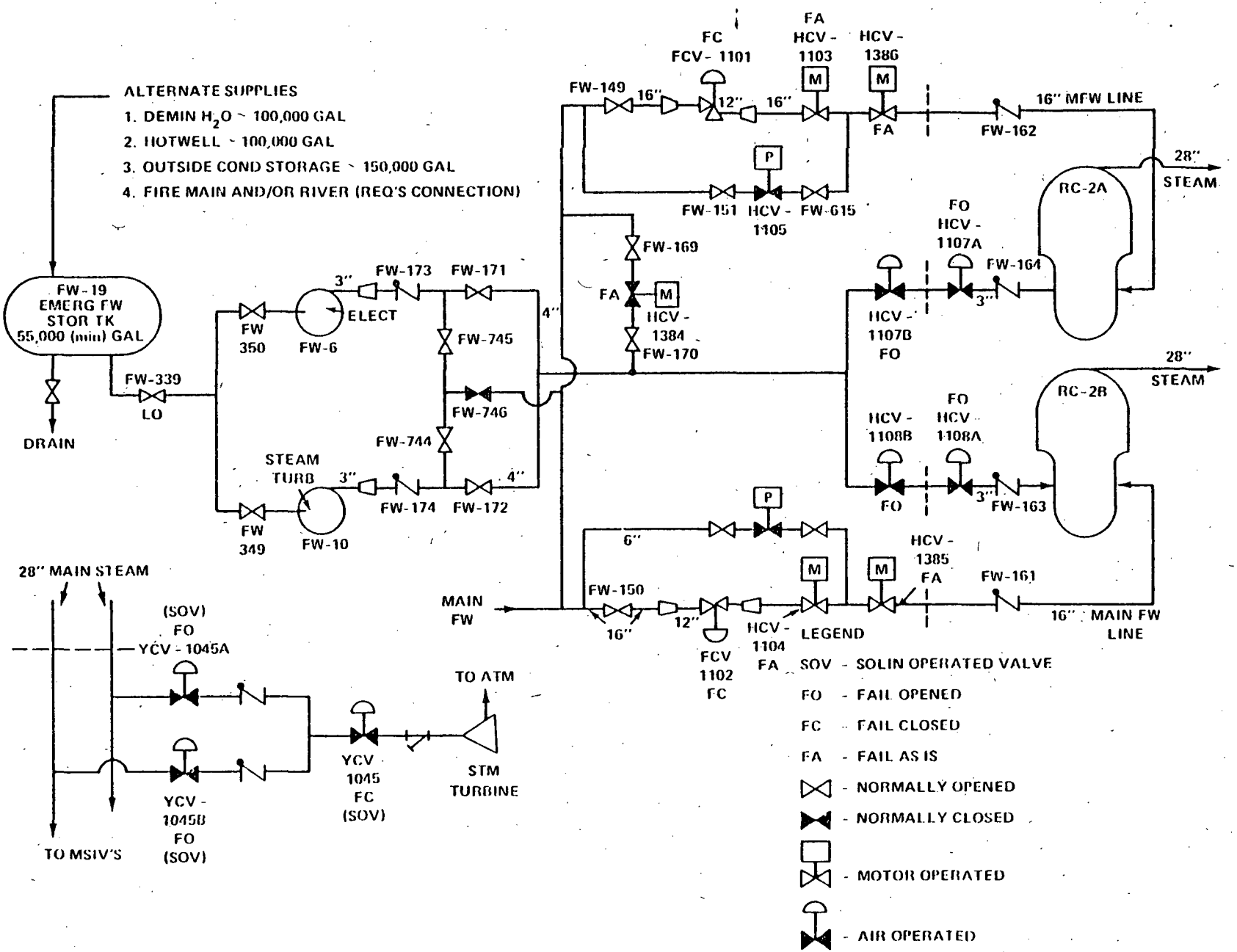

Auxiliary Feedwater System
Ft. Calhoun
Figure 1

4. Maine Yankee

ENCLOSURE 1

X.4 (CE) MAINE YANKEE

AUXILIARY FEEDWATER SYSTEM

X.4.1 System Description

X.4.1.1 Configuration, Overall Design

A simplified diagram of the Maine Yankee auxiliary feedwater system (AFWS), is shown in Figure 1. The principal components of the AFWS include two motor-driven pumps and one turbine-driven pump each supplying flow to the three steam generators (SG). Each motor-driven pump and the turbine-driven pump has a rated capacity of 500 gpm @ 1100 psia head. All three pump discharge lines feed a common header such that any one pump can deliver flow to all or any SG. The plant can be cooled to the temperature at which the shutdown cooling system can be used to bring the plant to a safe shutdown by any one pump and one SG. The licensee estimates that the steam generators would boil dry in approximately 30 minutes and 15 minutes as a result of a loss of main feedwater due to the loss of offsite power, and in the event of loss of main feedwater without loss of offsite power, respectively.

The primary water source for the AFWS is the demineralized water storage tank (DWST) having a total storage capacity of 150,000 gallons, 100,000 of which are dedicated to the AFWS. The licensee states that this

dedicated inventory is sufficient for about 6 hours of decay heat removal, and that this is ample time to allow for replenishing of the supply from backup sources, if needed.

The secondary water source is the primary water storage tank with a capacity of 150,000 gallons. This source is normally isolated from the system by locked closed valves. The licensee estimates that manual actuation to open the valves would take five minutes for each valve. A low level in the DWST is alarmed in the control room to alert the operator to connect the secondary source.

Both water sources are backed up by the primary water treatment plant which can supply 300 gpm to the primary or secondary source. The fire protection water system, which has a storage of 3 million gallons, can also be used to provide AFW for an extended period of time. Connection of the fire protection water system to the AFWS is accomplished by a fire hose connection which the licensee estimates takes one-half hour to accomplish.

The two AFW motor-driven pumps are located in the AFW pump house and the AFW turbine driven pump is located in in the main steam and feedwater valve area. Both rooms that contain the AFW pumps are cooled by the normal room ventilation system. The three main steam lines, one from each SG, pass through the main steam and feedwater valve area containing the turbine-driven pump. Thus, a steam

line break in this room could disable the turbine-driven pump. The second motor-driven pump was added as a result of the NRC high energy pipe line break criteria of 1973. All three AFW pumps have a self-contained, self lubricating oil system.

X.4.1.2 Components

The AFW system, including components and piping are safety-grade, seismic Category I and are located in tornado-missile proof buildings. The primary water supply system, including the demineralized water storage tank is seismically designed and is Safety Class 3 up to the regulating valves and Class 2 from the regulating valves to the steam generators. All other water sources are of non-seismic design and non-safety grade.

X.4.1.3 Power Sources

The power supplies and instrumentation are Class 1E. The two motor-driven auxiliary feedwater pumps are supplied from two independent alternating current (AC) power emergency buses. The three pneumatic-operated discharge flow control valves associated with the three steam generators receive control power from the same AC vital instrument bus (Division IV) and fail open. This bus is normally supplied by a corresponding direct current (DC) power emergency bus via an inverter; however, by transfer switch operation, this bus may be connected to the Division I bus.

The steam for the turbine-driven pump is received from the main steam system via a series of valves as shown in Figure 1. Three of these valves are pneumatic diaphragm air-operated valves. One of these air-operated valves fails closed and is designed to close on high containment pressure (5 psig). The other two air-operated valves fail open; one receives its control power from the Division IV vital AC bus and the other from a DC bus.

X.4.1.4: Instrumentation and Controls

X.4.1.4.1 Controls

The auxiliary feedwater system is manually initiated and controlled from the control room upon the loss of the main feedwater system. Steam generator level indication (narrow and wide range) are available to the operator in the control room. The narrow range level channels are designed in accordance with protection system requirements. Although the wide range level channel is not considered to be safety-related, it is powered from the vital AC instrument buses.

X.4.1.4.2 Information Available to Operator

System information available to the operator in the control room to assess the performance of the auxiliary feedwater system is as follows:

- Motor breaker position indicating lights associated with each motor-driven auxiliary feedwater pump.

- Motor amperage for each motor-driven AFW pump.

- Control signal indication (0-100%) to each air operated auxiliary feedwater flow control valve.

- Auxiliary feedwater flow path discharge pressure indicating light.

- Demineralized water storage tank water level indication.

- Steam generator levels.

X.4.1.4.3 Initiating Signals for Automatic Operation

The auxiliary feedwater system is initiated manually from the control room.

X.4.1.5 Testing

The power supplies are tested monthly. Diesel generators are started and connected to the bus and operated for 2 hours at full load. The AFW pumps, the system valves, and instrumentation are tested quarterly in accordance with Technical Specifications. Full flow testing is performed upon startup and shutdown.

X.4.1.6 Technical Specification

The following aspects of the Maine Yankee Technical Specifications, including Limiting Conditions of Operation, are applicable to the AFWS.

1. The following conditions must be met for a steam generator to be considered operable for decay heat removal.

   A. The reactor coolant system must be closed and pressurized to 100 psi above saturation pressure.

   B. The steam generator must have both the cold and hot leg stop valves fully open.

   C. The steam generator water level must be above the top of the tube bundle.

   D. An inventory of over 100,000 gallons of primary grade feedwater must be available.

   E. A feed pump must be operable.

2. The reactor shall not be maintained in a power operating condition unless the following conditions are met to assure post shutdown heat removal capability.

   A. Two steam generator feed pumps are operable.

B. An inventory of over 100,000 gallons of primary grade feedwater is available.

Exception: If either steam generator auxiliary feed pump becomes inoperable continued power operation is permitted for a maximum of 7 days. In this stuation, the operable feed pump is to be tested once a day.

X.4.2 Reliability Evaluation

X.4.2.1 Dominant Failure Modes

The following failure modes were found to dominate the demand unavailability of the Maine Yankee AFWS:

- Loss of Feedwater (LOFW) With Offsite Power Available

  Failure of the operator to start the AFW system was assessed to be the dominant failure mode for this transient. To start the system the operator must start one of the 3 pumps and open one of the 3 air operated flow control valves. The licensee estimates that it will take approximately 15 minutes to boil dry the SG for this transient followed by reactor trip.

X.4.2.1.2 LOFW With Only Onsite Power Available

Failure of the operator to start the AFW system, as in the previous case, was assessed to be the dominant failure mode for this transient. The same system startup procedure as above is followed. The licensee estimates that it will take approximately 30 minutes to boil dry the SG for this transient followed by a reactor trip.

X.4.2.1.3 LOFW With Only DC Power Available

The dominant fault contributors for this event are failure of the turbine-driven AFW train due to hardware malfunctions or maintenance errors or failure of the operator to start the system. Another potential fault contributor for this event is the CIS isolation valves. On total loss of AC, the CIS isolation valve, which fails closed, is held open by an air accumulator supplied by an AC powered air compressor. If sufficient air leaks through the seals, the valve could fail closed, thereby stopping steam flow to the AFWS turbine and in turn stopping AFW flow. It is presently unknown whether the operator can manually open this valve locally.

X.4.2.2 Potential Interactions

Potential interactions between systems that could affect AFWS operation include:

- Interaction with the Containment Isolation System - Upon a 5 psig containment pressure or an air or power failure to the air operated CIS isolation valve will cause the CIS isolation valve

to close. Such closing blocks steam flow to the turbine-driven AFW pump, thereby rendering the steam turbine drive AFWS pump ineffective for those situations which necessitate the use of said pump.

- Interactions With the Power Supply System - All AFWS flow control valves derive their control power from the same vital instrument bus. Upon the loss of power on this bus, these valves would fail open (safe); however, since the actual response of these valves is unknown under a degraded bus condition, there is a potential for adverse valve response.

- Piping System Interactions - Since all three trains feed a common header, a break in this line could cause the loss of the entire system.

X.4.3 Recommendations for this Plant

The short-term recommendations (both generic, denoted by GS, and plant-specific) identified in this section represent actions to improve AFW systems reliability that should be implemented by January 1, 1980, or as soon thereafter as is practicable. In general, they involve upgrading of Technical Specifications or establishing procedures to avoid or mitigate potential system or operator failures. The long-term recommendations (both generic, denoted by GL and plant-specific) identified in this section involve system design

evaluations and/or modifications to improve AFW system reliability and represent actions that should be implemented by January 1, 1981, or as soon thereafter as is practicable.

X.4.3.1 Short Term

1. Recommendation GS-2 - The licensee should lock open single valves or multiple valves in series in the AFW system pump suction piping and lock open other single valves or multiple valves in series that could interrupt all AFW flow. Monthly inspections should be performed to verify that these valves are locked and in the open position. These inspections should be incorporated into the surveillance requirements of the plant Technical Specifications. See Recommendation GL-2 for the longer term resolution of this concern.

2. Recommendation GS-4 - Emergency procedures for transferring to alternate sources of AFW supply should be available to the plant operators. These procedures should include criteria to inform the operator when, and in what order, the transfer to alternate water sources should take place. The following cases should be covered by the procedures:

   - The case in which the primary water supply is not initially available. The procedures for this case should include any

operator actions required to protect the AFW system pumps against self-damage before water flow is initiated; and,

- The case in which the primary water supply is being depleted. The procedure for this case should provide for transfer to the alternate water sources prior to draining of the primary water supply.

3. Recommendation GS-6 - The licensee should confirm flow path availability of an AFW system flow train that has been out of service to perform periodic testing or maintenance as as follows:

   - Procedures should be implemented to require an operator to determine that the AFW system valves are properly aligned and a second operator to independently verify that the valves are properly aligned.
   - The licensee should propose Technical Specifications to assure that prior to plant startup following an extended cold shutdown, a flow test would be performed to verify the normal flow path from the primary AFW system water source to the steam generators. The flow test should be conducted with AFW system valves in their normal alignment.

4. Recommendation GS-8 - The licensee should install a system to automatically initiate AFW system flow. For the short-term, this system need not be safety-grade; however, it should meet

the criteria listed below, which are similar to Item 2.1.7a of NUREG-0578. For the longer term, the automatic initiation signals and circuits should be upgraded to meet safety-grade requirements as indicated in Recommendation GL-1.

- The design should provide for the automatic initiation of the auxiliary feedwater system flow.
- The automatic initiation signals and circuits should be designed so that a single failure will not result in the loss of auxiliary feedwater system function.
- Testability of the initiation signals and circuits should be a feature of the design.
- The initiating signals and circuits should be powered from the emergency buses.
- Manual capability to initiate the auxiliary feedwater system from the control room should be retained and should be implemented so that a single failure in the manual circuits will not result in the loss of system function.
- The alternating current motor-driven pumps and valves in the auxiliary feedwater system should be included in the automatic actuation (simultaneous and/or sequential) of the loads to the emergency buses.
- The automatic initiation signals and circuits should be designed so that their failure will not result in the loss of manual capability to initiate the AFW system from the control room.

5. Recommendation - The licensee should propose a revision to the Technical Specification to require periodic AFWS operability testing on a monthly frequency rather than quarterly in conformance with current Standard Technical Specifications.

6. Recommendation - A pneumatic-operated valve in the steam supply line to the turbine-driven AFW pump, and the three pneumatic-operated AFW flow control valves derive their power from the same AC vital instrument bus. Although these valves are designed to fail open upon the loss of air or power, thereby assuring auxiliary feedwater flow to the steam generators upon such losses, it cannot be concluded that all failures will result in opening the valves. The consequences of voltage degradation should be analyzed as well as other failures (e.g., restricted air flow) to assure that such events would not incapacitate the auxiliary feedwater system. Establish suitable emergency procedures to assure AFWS function for such events. (See Long-Term Recommendation Number 3.)

7. The licensee should verify that the air accumulator will hold the containment isolation valve in the turbine driven pump steam supply line open for at least two hours following loss of all AC power.

X.4.3.2 Additional Short-Term Recommendations

The following additional short-term recommendations resulted from the staff's Lessons Learned Task Force and the Bulletins and Orders Task Force review of AFW systems at Babcock & Wilcox-designed operating plants subsequent to our review of the AFW system designs at W- and C-E-designed operating plants. They have not been examined for specific applicability to this facility.

1. Recommendation - The licensee should provide redundant level indications and low level alarms in the control room for the AFW system primary water supply to allow the operator anticipate the need to make up water or transfer to an alternate water supply and prevent a low pump suction pressure condition from occurring. The low level alarm setpoint should allow at least 20 minutes for operator action, assuming that the largest capacity AFW pump is operating.

2. Recommendation - The licensee should perform a 72-hour endurance test on all AFW system pumps, if such a test or continuous period of operation has not been accomplished to date. Following the 72-hour pump run, the pumps should be shut down and cooled down and then restarted and run for one hour. Test acceptance criteria should include demonstrating that the pumps remain within design limits with respect to bearing/bearing oil temperatures and vibration and that pump room ambient conditions (temperature, humidity) do not exceed environmental qualification limits for safety related equipment in the room.

3. Recommendation - The licensee should implement the following requirements as specified by Item 2.1.7.b on page A-32 of NUREG-0578:

   "Safety-grade indication of auxiliary flow to each steam generator should be provided in the control room.

   "The auxiliary feedwater flow instrument channels should be powered from the emergency buses consistent with satisfying the emergency power diversity requirements for the auxiliary feedwater system set forth in Auxiliary Systems Branch Technical Position 10-1 of the Standard Review Plan, Section 10.4.9."

4. Recommendation - Licensees with plants which require local manual realignment of valves to conduct periodic tests on one AFW system train, and there is only one remaining AFW train available for operation should propose Technical Specifications to provide that a dedicated individual who is in communication with the control room be stationed at the manual valves. Upon instruction from the control room, this operator would realign the valves in the AFW system train from the test mode to its operational alignment.

X.4.3.3 Long Term

Long-term recommendations for improving the system are as follows:

1. Recommendation - GL-1 - Licensees with plants having a manual starting AFW system, should install a system to automatically initiate the AFW system flow. This system and associated automatic initiation signals should be designed and installed to meet safety-grade requirements. Manual AFW system start and control capability should be retained with manual start serving as backup to automatic AFW system initiation.

2. Recommendation - GL-2 - Licensees with plants in which all (primary and alternate) water supplies to the AFW systems pass through valves in a single flow path should install redundant parallel flow paths (piping and valves).

   Licensees with plants in which the primary AFW system water supply passes through valves in a single flow path, but the alternate AFW system water supplies connect to the AFW system pump suction piping downstream of the above valve(s) should install redundant valves parallel to the above valve(s) or provide automatic opening of the valve(s) from the alternate water supply upon low pump suction pressure. The licensee should propose Technical Specifications to incorporate appropriate periodic inspections to verify the valve positions.

3. Recommendation - Modify the AFWS design to eliminate the potential for adverse response of the three AFW flow control valves and one of the steam admission valves to the turbine pump due to degradation of power of the Division IV vital bus, e.g., provide service to these valves from different Division.

4. Recommendation - The licensee should evaluate the following concerns:

   a. A pipe break in the auxiliary feedwater system common discharge header could result in the loss of auxiliary feedwater system function even without a postulated single active failure. The licensee indicated that in such an event the auxiliary feedwater can be manually routed through the main feedwater lines to the steam generators.

   b. In the event of a steam or feedwater line break (main or auxiliary) the isolation of the auxiliary feedwater flow paths to the affected steam generator is accomplished manually. The licensee should evaluate the postulated pipe breaks stated above and (1) determine any AFW system design changes or procedures necessary to detect and isolate the break and direct the required feedwater flow to the steam generator(s) before they boil dry or (2) describe how the

plant can be brought to a safe shutdown condition by use of other systems which would be available following such postulated events.

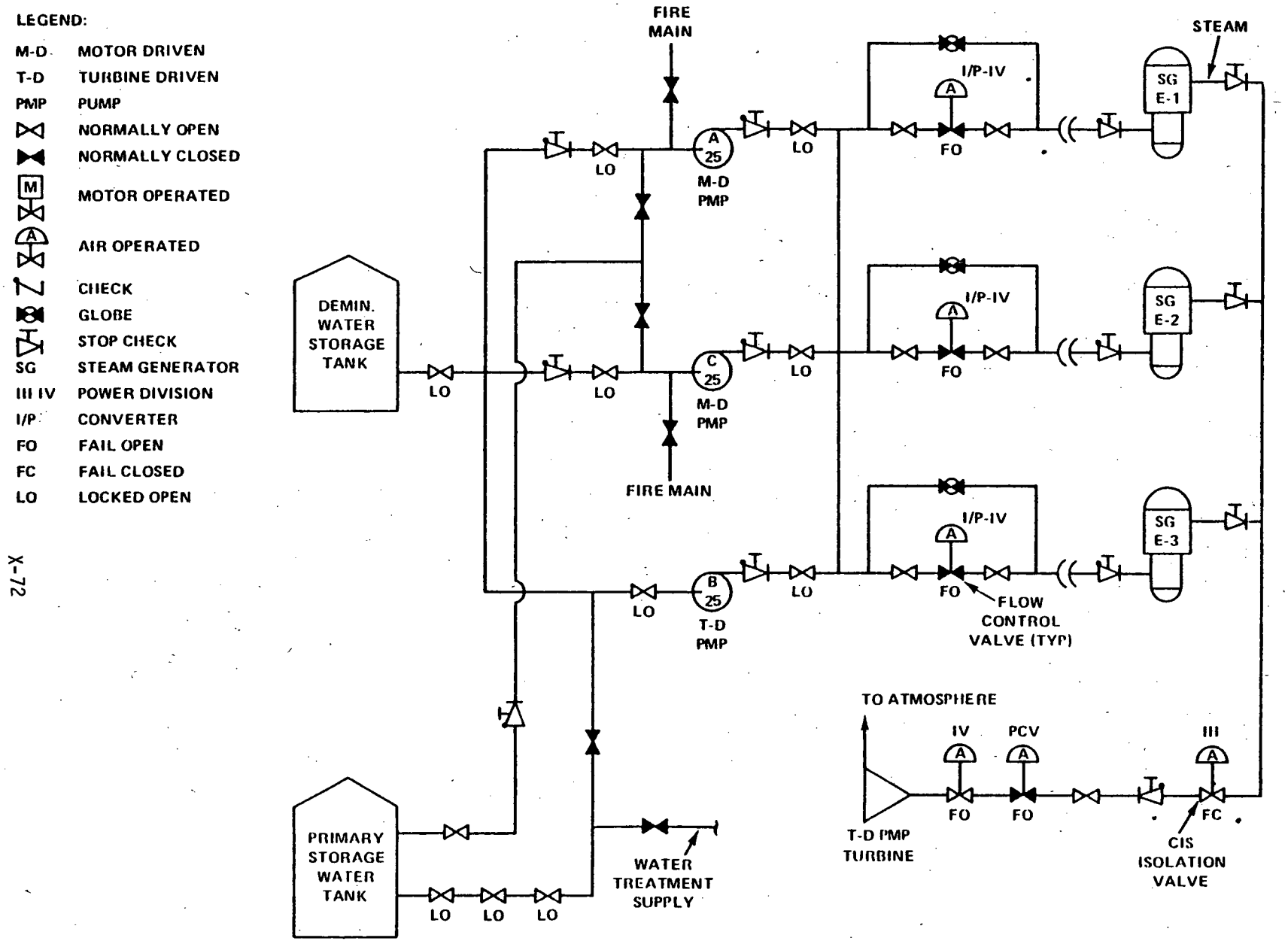

Auxiliary Feedwater System
Maine Yankee
Figure 1

5. MILLSTONE 2

ENCLOSURE 1

X.5 (CE) MILLSTONE 2

AUXILIARY FEEDWATER SYSTEM

X.5.1 System Description

X.5.1.1 Configuration and Overall Design

The auxiliary feedwater system (AFWS) is designed to supply water to the steam generators (SG) for reactor coolant system decay heat removal when the main feedwater system is not available. It is also used for plant startups and shutdowns below the power level where the main feedwater system is not required.

The AFWS is shown in simplified form on Figure 1. The system consists of a steam turbine-driven pump having a 600 gpm capacity, and two motor-driven pumps each having a 300 gpm capacity. The steam supply to the turbine is obtained from a common line connected to lines coming from each of two steam generators. The AFWS is normally aligned as indicated on Figure 1, the motor-driven pumps supplying No. 1 SG and the turbine driven pump supplying No. 2 SG.

A condensate storage tank (CST) of 250,000 gallons capacity is the primary source of water for the AFWS, and the primary water storage tank (PWST) of 150,000 gallons capacity is the secondary source. Another back-up source consists of two 250,000 gallon fire storage water tanks. In addition, a connection to the city water supply exists which can be used to provide AFW for an extended period of time, if required.

The AFWS is manually actuated from the control room. The pumps and appropriate valves can be controlled from the control room and from the remote shutdown panel.

X.5.1.2 Component Design Classification

The pumps, motors and piping associated with the AFWS are designed to seismic Category I requirements. The CST is not designed to seismic Category I requirements; however, a seismic Category I missile barrier surrounds the CST. This barrier will contain the water in the event of a CST tank failure.

X.5.1.3 Power Sources

The motor-driven pumps are supplied from separate Class 1E emergency buses. All motor operated valves (MOVs) associated with the AFWS are powered from the 480V AC emergency buses and fail as-is.

Steam generator level instrumentation, AFWS pump breaker and valve controls are powered from their associated Class 1E emergency buses. Although the AFWS instruments and associated wiring are not Class 1E, they are powered from Class 1E emergency buses.

The steam for the turbine-driven pump is received from the main steam system via a series of valves as shown in Figure 1. Steam is introduced to the turbine via a normally closed motor operated steam admission valve, and steam flow is regulated by a turbine throttle valve in series with the admission valve.

X.5.1.4 Instrumentation and Control

X.5.1.4.1 Controls

The AFWS can be controlled from either of two control stations, one at the main control room; the other at the remote shutdown panel.

X.5.1.4.2 Information Available to the Operator

The following indications are available, except as indicated, at both control stations:

1. SG level
2. Pump turbine RPM (control room only)
3. Pump motor current (control room only)
4. MOV valve positions
5. Pump motor breaker position
6. CST level
7. PWST level (control room only)
8. Auxiliary feed flow
9. Pump discharge pressure

The following alarms annunciate at both control stations:

1. CST low level
2. SG low level

X.5.1.4.3 Initiating Signals for Automatic Operation

Not applicable since AFW is manually initiated.

X.5.1.5 Testing

The systems are tested monthly in accordance with plant Technical Specification requirements. In addition to the periodic testing, the systems are retested in the recirculation mode in accordance with the surveillance tests subsequent to performing maintenance.

The systems are tested using the recirculating lines, at which time discharge pressures and pump motor currents are monitored. In addition, valve positions are verified monthly.

The licensee uses the system routinely during startup and shutdown thus verifying valve positions.

X.5.1.6 Technical Specifications

The Limiting Condition For Operation (LCO) for the system is 48 hours upon a failure of one of the AFWS trains (e.g., a pump motor failure). If the affected AFWS train is not restored within 48 hours, the unit must be brought to a hot shutdown in the next 12 hours.

A review of the Technical Specifications indicated that these specifications cover LCOs and periodic surveillance testing consistent with current Standard Technical Specifications.

X.5.2 Reliability Evaluation Results

X.5.2.1 Dominant Failure Modes

Failure modes of the AFWS were assessed for three loss of main feedwater initiating events. The dominant failure modes for each transient type are discussed below.

- Loss of Main Feedwater (LOFW) with Offsite Power Available

The dominant failure mode of the AFWS for this transient is failure of the operator to manually actuate the system. Upon the loss of main feedwater, the licensee estimates that the operator has 15 to 45 minutes, depending on the initiating transient, to actuate the AFWS before the steam generators would boil dry. Because of this time restriction, failure to perform the required actuation prior to boiling the SG dry has been assessed to be the dominant failure mode for this transient.

- LOFW With Only Onsite AC Power Available

This transient is very similar to the transient discussed above, except that the offsite AC power system is not available. Additional failure modes related to the onsite AC power system were considered; however, these did not have a significant impact on the dominant failure mode. As such, the dominant failure mode discussed above (i.e., failure of the operator to actuate the AFWS) is also dominant for this transient.

LOFW with Only DC Power Available

For this event no AC power (onsite or offsite) is available; therefore, the AFWS is reduced to the steam-driven pump train. Failures which can fail this train include hardware failures of the pump or valves, maintenance outages, and human errors.

The dominant failure mode for this event is failure of the operator to manually open two normally closed valves (the steam admission valve and the AFW discharge valve) in the turbine-driven train within the aforementioned 15 to 45 minutes after the demand. The valves are AC motor-operated and are normally powered from offsite power or from the diesel-generators on loss of offsite AC power. Since neither of these power sources is available during this event, local manual opening of the valves is required.

X.5.2.2 Principal Dependencies

The most significant dependency found in this evaluation is the dependence on operator action to actuate the AFWS on demand.

The second significant dependency found is the dependence on AC power to actuate certain portions of the steam-driven pump train of the AFWS. This dependency is the dominant contributor to AFWS unavailability upon the total loss of AC power.

Location dependencies, such as component proximity to high energy lines, were considered but do not appear to be significant.

X.5.3 Recommendations

The short-term recommendations (both generic, denoted by GS, and plant-specific) identified in this section represent actions to improve AFW system availability that should be implemented by January 1, 1980, or as soon thereafter as is practicable. In general, they involve upgrading of Technical Specifications or establishing procedures to avoid or mitigate potential system or operator failures. The long-term recommendations (both generic, denoted by GL, and plant-specific) identified in this section involve system design evaluations and/or modifications to improve AFW system reliability and represent actions that should be implemented by January 1, 1981, or as soon thereafter as is practicable.

X.5.3.1 Short-Term

1. Recommendation GS-4 - Emergency procedures for transferring to alternate sources of AFW supply should be available to the plant operators. These procedures should include criteria to inform the operator when, and in what order, the transfer to alternate water sources should take place. The following cases should be covered by the procedures:

   - The case in which the primary water supply is not initially available. The procedures for this case should include any operator actions required to protect the AFW system pumps against self-damage before water flow is initiated; and,

- The case in which the primary water supply is being depleted. The procedure for this case should provide for transfer to the alternate water sources prior to draining of the primary water supply.

2. Recommendation GS-5 - The plant should be capable of providing the required AFW flow for at least two hours from one AFW pump train independent of any alternating current power source. If manual AFW system initiation or flow control is required following a complete loss of alternating current power, emergency procedures should be established for manually initiating and controlling the system under these conditions. Since the water for cooling of the lube oil for the turbine-driven pump bearings may be dependent on alternating current power, design or procedural changes shall be made to eliminate this dependency as soon as practicable. Until this is done, the emergency procedures should provide for an individual to be stationed at the turbine-driven pump in the event of the loss of all alternating current power to monitor pump bearing and/or lube oil temperatures. If necessary, this operator would operate the turbine-driven pump in an on-off mode until alternating current power is restored. Adequate lighting powered by direct current power sources and communications at local stations should also be provided if manual initiation and control of the AFW system is needed. (See Recommendation GL-3 for the longer-term resolution of this concern.)

3. Recommendation GS-6 - The licensee should confirm flow path availability of an AFW system flow train that has been out of service to perform periodic testing or maintenance as follows:

   - Procedures should be implemented to require an operator to determine that the AFW system valves are properly aligned and a second operator to independently verify that the valves are properly aligned.
   - The licensee should propose Technical Specifications to assure that prior to plant startup following an extended cold shutdown, a flow test would be performed to verify the normal flow path from the primary AFW system water source to the steam generators. The flow test should be conducted with AFW system valves in their normal alignment.

4. Recommendation GS-8 - The licensee should install a system to automatically initiate AFW system flow. For the short-term, this system need not be safety-grade; however, it should meet the criteria listed below, which are similar to Item 2.1.7a of NUREG-0578. For the longer term, the automatic initiation signals and circuits should be upgraded to meet safety-grade requirements as indicated in Recommendation GL-1.

   - The design should provide for the automatic initiation of the auxiliary feedwater system flow.
   - The automatic initiation signals and circuits should be designed so that a single failure will not result in the loss of auxiliary feedwater system function.

- Testability of the initiating signals and circuits should be a feature of the design.
- The initiating signals and circuits should be powered from the emergency buses.
- Manual capability to intiate the auxiliary feedwater system from the control room should be retained and should be implemented so that a single failure in the manual circuits will not result in the loss of system function.
- The alternating current motor-driven pumps and valves in the auxiliary feedwater system should be included in the automatic actuation (simultaneous and/or sequential) of the loads to the emergency buses.
- The automatic initiation signals and circuits should be designed so that their failure will not result in the loss of manual capability to intiate the AFW system from the control room.

X.5.3.2 Additional Short-Term Recommendations

The following additional short-term recommendations resulted from the staff's Lessons Learned Task Force review and the Bulletins and Orders Task Force review of AFW systems at Babcock & Wilcox-designed operating plants subsequent to our review of the AFW system designs at W- and C-E-designed operating plants. They have not been examined for specific applicability to this facility.

1. Recommendation - The licensee should provide redundant level indications and low level alarms in the control room for the AFW system primary water supply to allow the operator to anticipate the need to make up water or transfer to an alternate water supply and prevent a low pump suction pressure condition from occurring. The low level alarm setpoint should allow at least 20 minutes for operator action, assuming that the largest capacity AFW pump is operating.

2. Recommendation - The licensee should perform a 72-hour endurance test on all AFW system pumps, if such a test or continuous period of operation has not been accomplished to date. Following the 72-hour pump run, the pumps should be shut down and cooled down and then restarted and run for one hour. Test acceptance criteria should include demonstrating that the pumps remain within design limits with respect to bearing/bearing oil temperatures and vibration and that pump room ambient conditions (temperature, humidity) do not exceed environmental qualification limits for safety-related equipment in the room.

3. Recommendation - The licensee should implement the following requirements as specified by Item 2.1.7.b on page A-32 of NUREG-0578:

   "Safety-grade indication of auxiliary feedwater flow to each steam generator should be provided in the control room.

"The auxiliary feedwater flow instrument channels should be powered from the emergency buses consistent with satisfying the emergency power diversity requirements for the auxiliary feedwater system set forth in Auxiliary Systems Branch Technical Position 10-1 of the Standard Review Plan, Section 10.4.9."

4. Recommendation - Licensees with plants which require local manual realignment of valves to conduct periodic tests on one AFW system train, and there is only one remaining AFW train available for operation should propose Technical Specifications to provide that a dedicated individual who is in communication with the control room be stationed at the manual valves. Upon instruction from the control room, this operator would realign the valves in the AFW system train from the test mode to its operational alignment.

X.5.3.3 Long-Term

Long-term recommendations for improving the system are as follows:

1. Recommendation - GL-1 - Licensees with plants having a manual starting AFW system should install a system to automatically initiate the AFW system flow. This system and associated automatic initiation signals should be designed and installed to meet safety-grade requirements. Manual AFW system start and control capability should be retained with manual start serving as backup to automatic AFW system initiation.

2. Recommendation - GL-3 - At least one AFW system pump and its associated flow path and essential instrumentation should automatically initiate AFW system flow and be capable of being independently of any alternating current power source for at least two hours. Conversion of direct power to alternating current is acceptable.

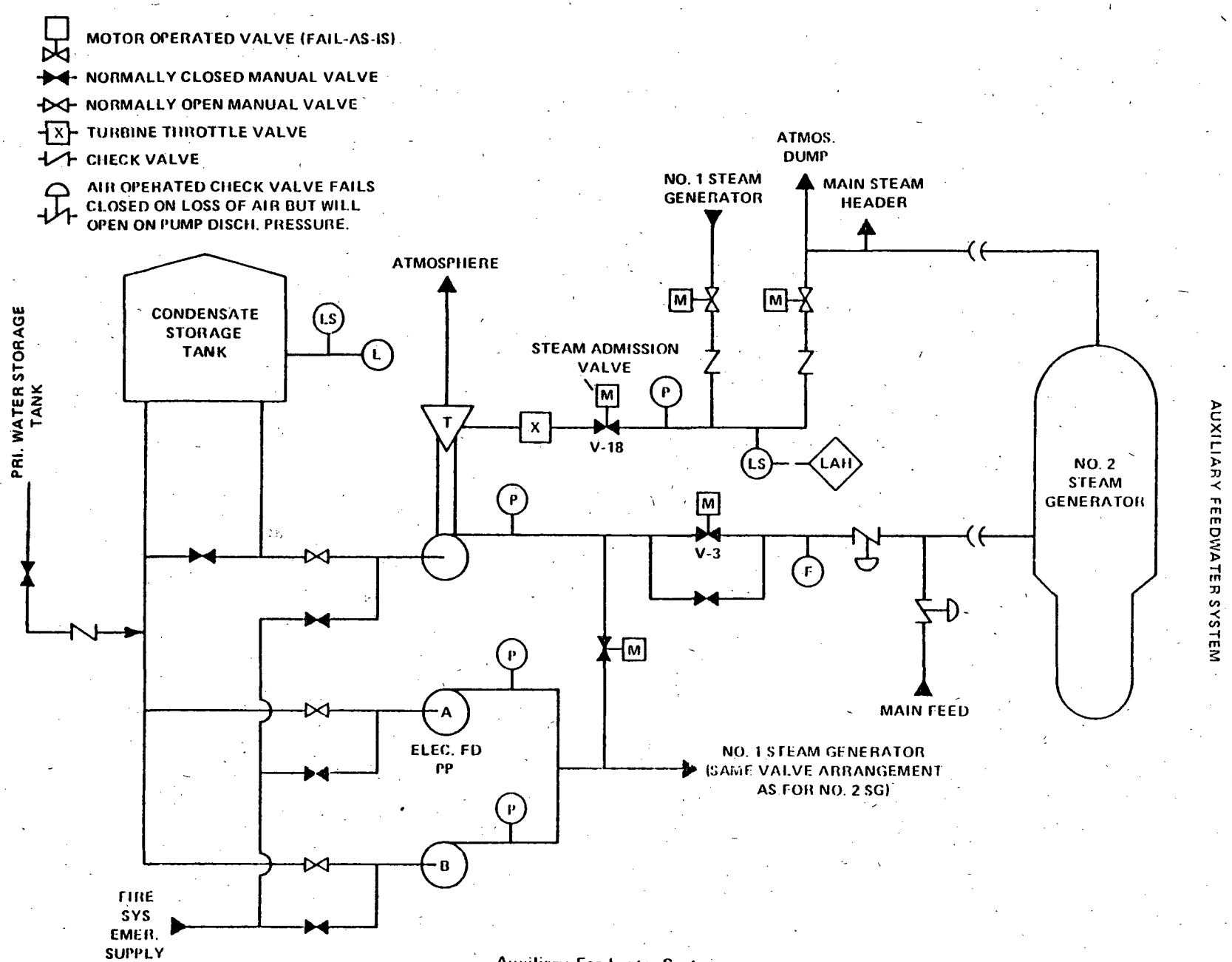

Auxiliary Feedwater System
Millstone 2
Figure 1

6. PALISADES

ENCLOSURE 1

X.6 (CE) PALISADES

AUXILIARY FEEDWATER SYSTEM (AFWS)

X.6.1 System Description

X.6.1.1 Configuration - Overall Design

A simplified flow diagram of Palisades AFWS is presented in Figure 1. The AFWS includes a motor-driven pump and a turbine-driven pump, each capable of supplying 100% flow requirements for decay heat removal. Each pump has a capacity of 415 gpm at 2730 feet. The pumps discharge to a common AFWS header which branches and connects to the main feed headers to each steam generator (SG). Only one SG is needed to cool the plant down to the temperature where the Shutdown Cooling system (SCS) can be used to bring the plant to safe shutdown. The licensee estimates that the steam generator would boil dry in 15 minutes without AFW flow following the worst case condition of loss of main feedwater with reactor trip.

The two pumps are located in the same room and could be rendered inoperable as a result of a pipe break causing the flooding of the room.

The primary source of water for the AFWS is a 125,000 gallon condensate storage tank. In addition, 75,000 gallons of water from the primary system make-up storage tank and 275 gpm from the make-up demineralizer system can be supplied to the condensate storage tank via pneumatic-operated valves which are opened from the control room. The technical specifications

require that a total of 100,000 gallons of water inventory be available for the AFWS. The licensee estimates that this inventory is approximately an 8 hour supply. The condensate storage tank is also connected to the main condenser hotwell through two make-up valves connected in parallel.

An alternate, long-term source of water to the AFWS, if needed, is from Lake Michigan and is directed to the AFWS pump suctions via the three fire protection system pumps. Two of the fire pumps are driven by dedicated diesel engines and the other pump is driven by an electric motor which is powered from one of the two station emergency diesel generators.

X.6.1.2 Components - Design Classification

The condensate storage tank is the only source of AFWS water which has a seismic Category 1 classification. The steam turbine-driven auxiliary feedwater pump and associated steam inlet valves and piping is designed to withstand a 0.05 earthquake as stated in Appendix A of the FSAR. The motor-driven auxiliary feedwater pump and associated piping and valves are classified seismic Category 1.

X.6.1.3 Power Sources

The motor-driven auxiliary feedwater pump is supplied from one of the two AC emergency buses. The turbine-driven pump can receive motive-power steam from either steam generator.

The pneumatic-operated valves in the discharge header of both pumps receive control power from separate AC vital instrument buses. These buses are normally supplied from an AC emergency bus and backed up by the corresponding DC emergency bus via an inverter. The pneumatic-operated valves in each steam line from the steam generator to the turbine-driven auxiliary feedwater pump are controlled from independent DC emergency buses.

X.6.1.4 Instrumentation and Controls

X.6.1.4.1 Controls

The AFWS is manually initiated and feedwater flow to the steam generator(s) is manually controlled from the control room. Steam generator level indication (narrow range only) is available to the operator in the control room. The narrow range level channels are designed in accordance with protection system requirements.

X.6.1.4.2 Information Available to Operator

System information available to the operator in the control room to assess the performance of the auxiliary feedwater system is as follows:

- Status indicating lights for the motor driven auxiliary feedwater pump.

- Position indication of auxiliary feedwater flow path control valves.

- Primary and secondary source water level indications.

- Auxiliary feedwater flow indication.

- Auxiliary feedwater pressure indication.

- Steam pressure at inlet of turbine driven auxiliary feedwater pump.

- Steam generator level.

X.6.1.4.3 Initiating Signals for Automatic Operation

The auxiliary feedwater system is initiated manually from the control room.

In the event of a steam or feedwater (main or auxiliary) line break, isolation of the auxiliary feedwater flow paths to the affected SG is accomplished manually.

Main steam line break isolation is accomplished automatically by the MSIV whereas feedwater line break isolation is accomplished manually.

A turbine trip will result in a reactor trip if reactor power is initially above 15 percent of rated power. A reactor trip will always result in a turbine trip.

X.6.1.5 Testing

Subsequent to the completion of this review, the license has been amended to incorporate new Technical Specification requirements as follows:

APPLICABILITY

Applies to periodic testing requirements of the turbine-driven and motor-driven auxiliary feedwater pumps.

OBJECTIVE

To verify the operability of the auxiliary feedwater system and its ability to respond properly when required.

SPECIFICATIONS

a. The operability of the motor- and steam-driven auxiliary feed pumps shall be confirmed as required by Specification 4.3c.[1/]

b. The operability of the auxiliary feedwater pumps' discharge valves CV-0736A and CV-0737A shall be confirmed at least every three (3) months.

1/ Specification 4.3c reads as follows: Inservice testing of ASME Class 1, 2 and 3 pumps, as determined by 10 CFR 50, Section 50.55a and Regulatory Guide 1.26 shall be performed in accordance with Section XI of the ASME Boiler and Pressure Vessel Code with applicable addenda as required by 10 CFR 50, Section 50.55a(g), except where specific relief has been granted by the NRC.

X.6.1.6 Technical Specifications

The limiting conditions of operation are in accordance with the Technical Specifications as follows:

Steam and Feedwater Systems

Applicability

Applies to the operating status of the steam and feedwater systems.

Objective

To define certain conditions of the steam and feedwater system necessary to assure adequate decay heat removal.

Specifications

The primary coolant shall not be heated above 325°F unless the following conditions are met:

a. Both auxiliary feedwater pumps operable or one auxiliary feedwater pump and one fire pump operable.

b. A minimum of 100,000 gallons of water in the condensate storage and primary coolant system makeup tanks combined and a backup source of additional water from Lake Michigan by the operability of one of the fire protection pumps.

c. All valves, interlocks and piping associated with the above components required to function during accident conditions, are operable.

d. The main steam stop valves are operable and capable of closing in five seconds or less under no-flow conditions.

The licensee has committed to implement the following plant operating procedures, until an approved Technical Specification revision in this regard is established:

With the primary coolant system temperature greater than 325°, both auxiliary feedwater pumps and one fire pump will be operable except as follows:

a. One auxiliary feedwater pump may be inoperable for a period of 72 hours.

b. The firewater makeup to the auxiliary feedwater pump suction may be inoperable for a period of 72 hours.

If an inoperable auxiliary feedwater pump is not restored to service in 72 hours, the plant will be placed in hot shutdown within the next 12 hours.

The licensee has proposed Technical Specification changes in this regard which are under staff evaluation.

X.6.2 Reliability Evaluation Results

The Palisades AFWS consists of two full capacity subsystems, either of which, when delivering its pump capacity, can provide for adequate decay heat removal. The system is manually actuated from the plant control room. The failure modes expected to dominate the overall demand unavailbility of the AFWS were assessed given three transient events for which operation of the AFWS would be required. The dominant failure modes for these three transient events are summarized below:

X.6.2.1 Loss of Main Feedwater (LOFW)

The dominant failure mode assessed for the AFWS design for this transient was failure of the plant operator to start at least one of the AFW system trains. This potential failure mode was estimated to contribute roughly 90% to the AFWS unavailability. The next level of dominant failure modes identified was principally composed of double faults. These double faults included: (1) failures in the turbine and electric pump trains due to hardware faults or allowed maintenance outages, and (2) inadvertent closure of manual valve (A) from the condensate storage tank to the pumps sucton and not reopening this valve or, as backup, the operator failing to activate the fire water supply to the AFWS before pump damage occurs.

X.6.2.2 LOFW and Loss of Offsite AC Power (Only Onsite AC Power Available)

The dominant faults identified for this transient were essentially the same as described above.

X.6.2.3 LOFW with Only DC Power Available

The dominant failure modes identified for this given event were (1) operator failing to actuate system from the control room and (2) demand failures in the turbine train due to single hardware faults and to the allowed outage time for this train of AFWS. For this LOFW event, it was noted that air operated valves (E) and (F) in the steam supply line for the turbine driven pump could eventually fail close after being actuated open. These valves fail closed on loss of air supply and with time, the air supply in the air accumulator could decay to a point where the valves would close. The operator can, however, manually open these valves (locally) and reestablish operation of the turbine driven pump. If the plant operator fails to do this, the AFWS will experience delayed failure.

X.6.2.4 Principal Dependencies/Interaction Identified

The principal dependencies are described above. One other potential interaction identified is due to the fact that both AFWS pumps are located in the same room. Thus, the pumps appear vulnerable to flooding. No high energy lines were said to exist within this room; however, the room has flooded in the past to a depth of about six inches due to lack of flow through the floor drain. The room is current being inspected for flooding every shift.

X.6.3 Recommendations for this Plant

The short-term recommendations (both generic, denoted by GS, and plant-specific) identified in this section represent actions to improve AFW system reliability that should be implemented by January 1, 1980, or as

soon thereafter as is practicable. In general, they involve upgrading of Technical Specifications or establishing procedures to avoid or mitigate potential system or operator failures. The long-term recommendations (both generic, denoted by GL, and plant-specific) identified in this section involve system design evaluations and/or modifications to improve AFW system reliability and represent actions that should be implemented by January 1, 1981, or as soon thereafter as is practicable.

X.6.3.1 Short-Term

1. Recommendation GS-2 - The licensee should lock open single valves or multiple valves in series in the AFW system pump suction piping and lock open other single valves or multiple valves in series that could interrupt all AFW flow. Monthly inspections should be performed to verify that these valves are locked and in the open position. These inspections should be proposed for incorporation into the surveillance requirements of the plant Technical Specifications. See Recommendation GL-2 for the longer term resolution of this concern.

2. Recommendation GS-4 - Emergency procedures for transferring to alternate sources of AFW supply should be available to the plant operators. These procedures should include criteria to inform the operator when, and in what order, the transfer to alternate water sources should take place. The following cases should be covered by the procedures:

   Those in which the primary water supply is not initially available. The procedures for this case should include any operator actions

required to protect the AFW system pumps against self-damage before water flow is initiated; and,

- In case in which the primary water supply is being depleted. The procedure for this case should provide for transfer to the alternate water sources prior to draining of the primary water supply.

3. Recommendation GS-6 - The licensee should confirm flow path availability of an AFW system flow train that has been out of service to perform periodic testing or maintenance as follows:

   - Procedures should be implemented to require an operator to determine that the AFW system valves are properly aligned and a second operator to independently verify that the valves are properly aligned.
   - The licensee should propose Technical Specifications to assure that prior to plant startup following an extended cold shutdown, a flow test would be performed to verify the normal flow path from the primary AFW system water source to the steam generators. The flow test should be conducted with AFW system valves in their normal alignment.

4. Recommendation GS-8 - The licensee should install a system to automatically initiate AFW system flow. For the short-term, this system need not be safety-grade; however, it should meet the criteria listed

below, which are similar to Item 2.1.7a of NUREG-0578. For the longer term, the automatic initiation signals and circuits should be upgraded to meet safety-grade requirements as indicated in Recommendation GL-1.

- The design should provide for the automatic initiation of the auxiliary feedwater system flow.
- The automatic initiation signals and circuits should be designed so that a single failure will not result in the loss of auxiliary feedwater system function.
- Testability of the initiating signals and circuits should be a feature of the design.
- The initiating signals and circuits should be powered from the emergency buses.
- Manual capability to initiate the auxiliary feedwater system from the control room should be retained and should be implemented so that a single failure in the manual circuits will not result in the loss of system function.
- The alternating current motor-driven pumps and valves in the auxiliary feedwater system should be included in the automatic actuation (simultaneous and/or sequential) of the loads to the emergency buses.
- The automatic initiation signals and circuits should be designed so that their failure will not result in the loss of manual capability to initiate the AFW system from the control room.

5. Recommendation The licensee should verify that the air accumulator will hold the air operated valves in the turbine driven pump steam supply line open for at least two hours following loss of all AC power.

6. Recommendation - The motor driven pump and the pneumatic-operated valve(G) through which AFW flow to steam generator A is controlled receive motive and control power from Division I emergency buses. Pneumatic valve (F), which supplies steam from steam generator A to the turbine driven AFW pump, receives control power from a Division II emergency bus. Similarly AFW flow control valve (H) and steam supply valve (E) associated with steam generator B receive power from Division II and I emergency buses respectively. Upon loss of air or power, the AFW flow control valves (G) and (H) fail open and the turbine driven pump steam admission valves (E) and (F) fail closed. It is recognized that the AFW flow control valves are designed to fail open upon loss of air or power so that AFW flow to the steam generators should be assured. However, it cannot be concluded that all failures will result in opening these valves. Degradation of Division I buses could potentially result in loss of the entire AFW system. The licensee should analyze the consequences of Division I voltage degradation as well as other failures (e.g., restricted air flow) to assure that there is no Division I failure mode that can result in loss of the entire AFW system. Until this analysis is

completed or the AFW system is modified to preclude such an occurrence, emergency procedures should be prepared to retain AFW system capability. (See long term recommendation 4.b).

7. Recommendation - Each steam generator has two pneumatic-operated atmospheric steam dump valves connected in parallel. These four valves have the same controller which presumably receives power from only one source, and therefore is vulnerable to a single failure event. Concern was expressed to the licensee as to whether the steam supply to the turbine AFW pump is adversely affected by the potential simultaneous opening of all atmospheric dump valves due to a single failure at the controller or its power source. The licensee has indicated that the pressure drop across the valves is sufficiently large to assure adequate steam supply to the turbine driven pump from the steam generators. We require that the licensee provide analyses to confirm this assertion. (See long term recommendation 4a.)

X.6.3.2 Additional Short-Term Recommendations

The following additional short-term recommendations resulted from the staff's Lessons Learned Task Force review and the Bulletins and Orders

Task Force review of AFW systems at Babcock & Wilcox-designed operating plants subsequent to our review of the AFW system designs at W- and C-E-designed operating plants. They have not been examined for specific applicability to this facility.

1. Recommendation - The licensee should provide redundant level indications and low level alarms in the control room for the AFW system primary water supply to allow the operator to anticipate the need to make up water or transfer to an alternate water supply and prevent a low pump suction pressure condition from occurring. The low level alarm setpoint should allow at least 20 minutes for operator action, assuming that the largest capacity AFW pump is operating.

2. Recommendation - The licensee should perform a 72-hour endurance test on all AFW system pumps, if such a test or continuous period of operation has not been accomplished to date. Following the 72-hour pump run, the pumps should be shut down and cooled down and then restarted and run for one hour. Test acceptance criteria should include demonstrating that the pumps remain within design limits with respect to bearing/bearing oil temperatures and vibration and that pump room ambient conditions (temperature, humidity) do not exceed environmental qualification limits for safety-related equipment in the room.

3. Recommendation - The licensee should implement the following requirements as specified by Item 2.1.7.b on page A-32 of NUREG-0578:

   "Safety-grade indiction of auxiliary feedwater flow to each steam generator shall be provided in the control room.

   The auxiliary feedwater flow instrument channels shall be powered from the emergency buses consistent with satisfying the emergency power diversity requirements for the auxiliary feedwater system set forth in Auxiliary Systems Branch Technical Position 10-1 of the Standard Review Plan, Section 10.4.9."

4. Recommendation - Licensees with plants which require local manual realignment of valves to conduct periodic test on one AFW system train, and there is only one remaining AFW train available for operation should propose Technical Specifications to provide that a dedicated individual who is in communication with the control room be stationed at the manual valves. Upon instruction from the control room, this operator would realign the valves in the AFW system train from the test mode to its operational alignment.

X.6.3.3 Long-Term

Long-term recommendations for improving the system are as follows:

1. Recommendation - GL-1 - Licensees with plants having a manual starting AFW system, should install a system to automatically initiate the AFW

system flow. This system and associated automatic initiation signals should be designed and installed to meet safety-grade requirements. Manual AFW system start and control capability should be retained with manual start serving as backup to automatic AFW system initiation.

2. Recommendation GL-2 - Licensees with plants in which all (primary and alternate) water suplies to the AFW systems pass through valves in a single flow path should install redundant parallel flow paths (piping and valves).

   Licensees with plants in which the primary AFW system water supply passes through valves in a single flow path, but the alternate AFW system water supplies connect to the AFW system pump suction piping downstream of the above valve(s) should install redundant valve(s) from the alternate water supply upon low pump suction pressure. The licensee should propose Technical Specifiations to incorporate appropriate periodic inspections to verify the valve positions.

3. Recommendation - The licensee should evaluate the following concerns:

   a. The discharge lines of both AFW pumps combine into a single header through which all AFW water must flow. A pipe break in this single flow path could result in the loss of the entire AFW system function.

b. The Palisades AFW system design does not meet the high energy line break criteria in SRP 10.4.9 and Branch Technical Position 10-1; namely, that the AFW system should maintain the capability to supply the required AFW flow to the steam generator(s) assuming a pipe break anywhere in the AFW pump discharge lines concurrent with a single active failure.

The licensee should evaluate the postulated pipe breaks stated above and (1) determine any AFW system design changes or procedures necessary to detect and isolate the break and direct the required feedwater flow to the steam generator(s) before they boil dry or (2) describe how the plant can be brought to a safe shutdown condition by use of other systems which would be available following such postulated events.

4. The licensee should evalute the following concerns:

a. Each steam generator has two pneumatic-operated atmospheric steam dump valves connected in parallel. These four valves have the same controller which presumably receives power from only one source. The consequences of single failures would be reduced by supplying power to the dump valves of each steam generator from separate power divisions. (See short-term recommendation 7).

b. This concern is a follow-up to that in short-term recommendation 6, (i.e., loss of the AFWS due to a degraded power system division). Valves (G) and (F) are both in AFWS train A but receive power from different DC divisions as do valves (E) and (H) which are in AFWS train B. Thus, the effect of degradation of one power division would be reduced by having valves (G) and (F) powered from the same division; similarly for valves (E) and (H).

c. Wide range steam generator level instrumentation is not provided in the control room. Evaluate the need for such instrumentation to facilitate proper operator action considering transients and accident conditions.

Based on the results of the above evaluations, the licensee should (1) determine any AFW system design changes necessary to mitigate the concern or (2) describe how the plant can be brought to a safe shutdown condition by use of other systems which would be available following such postulated events.

6.3.4 Considerations Based on the Systematic Evaluation Program

The following items are under review by the Systematic Evaluation Program (SEP) and supplement the above long-term recommendations.

1. The Palisades Plant including the AFWS will be reevaluated during the SEP with regard to internally and externally generated missiles, pipe whip and jet impingement, quality and seismic design requirements,

earthquakes, tornadoes, floods, and the failure of nonessential systems.

2. The staff will reassess the need for a water level alarm system in the AFWS pump room.

3. The Palisades AFWS is not automatically initiated and the design does not have capability to automatically terminate feedwater flow to a depressurized steam generator and provide flow to the intact steam generator. This is accomplished by the control room operator. The effect of this provision will be assessed in the main steam line break evaluation for Palisades.

4. A lack of system redundancy exists because the turbine-driven AFWS pump is not seismic Class 1. The staff will consider the need for upgrading the seismic classification of the pump in the SEP integrated assessment of Palisades.

5. The staff will assess the need for increasing the technical specification inventory limit for the seismic Class I AFWS water supply.

LEGEND:

M-D	MOTOR DRIVEN
T-D	TURBINE DRIVEN
	NORMALLY OPEN
	NORMALLY CLOSED
	AIR OPERATED
SG	STEAM GENERATOR
I,II,III	POWER DIVISIONS
A	ALTERNATING CURRENT
D	DIRECT CURRENT
TB	TURBINE
FO	FAIL OPEN
FC	FAIL CLOSE
FAI	FAIL AS IS

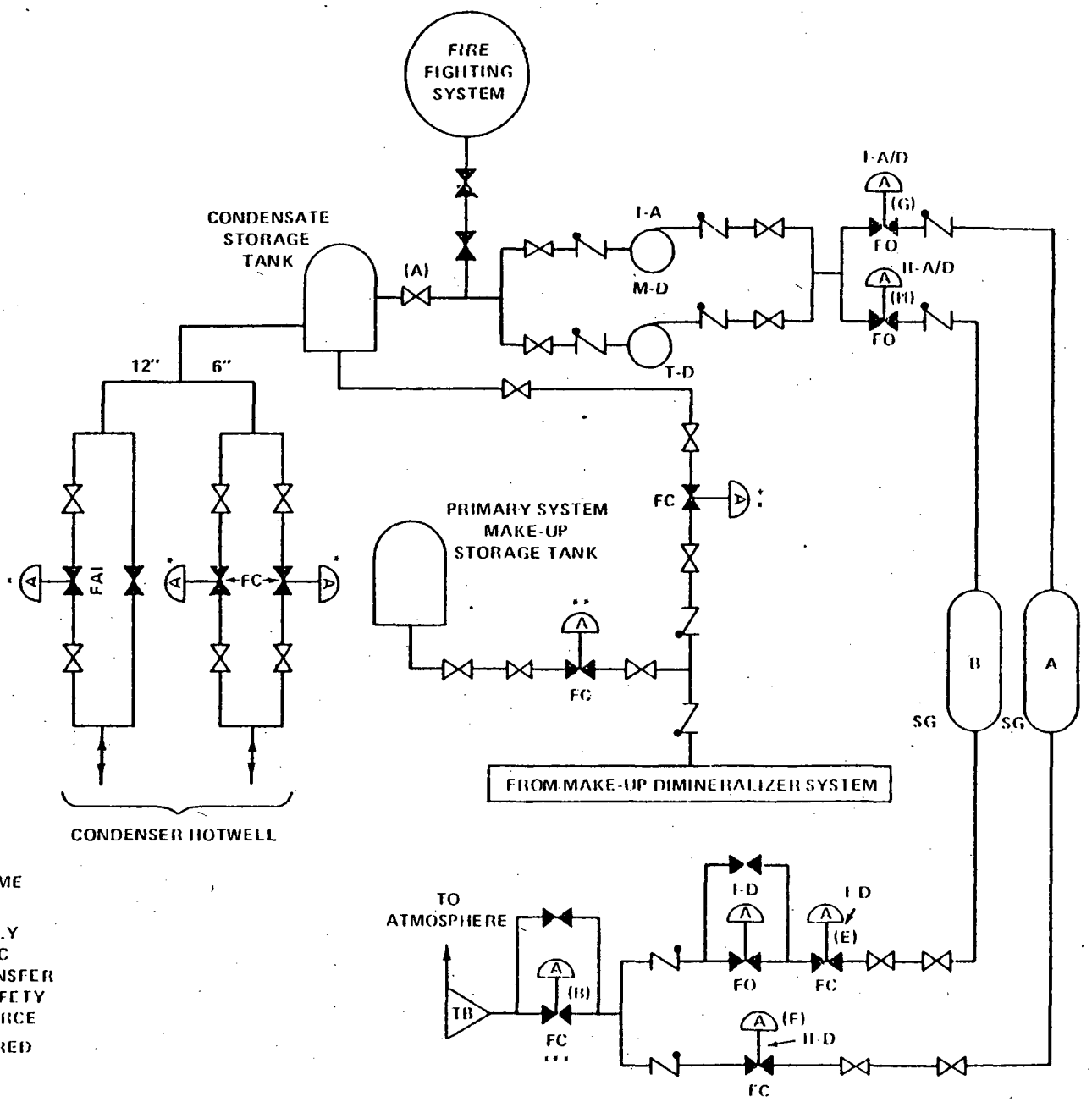

NOTES:

- * VALVES POWERED FROM SAME D-C EMERGENCY BUS
- ** VALVES POWERED NORMALLY FROM SAME NON SAFETY A-C BUS MANUAL BACKUP TRANSFER CAPABILITY OF THE NON SAFETY BUS TO AN EMERGENCY SOURCE
- *** NO CONTROL POWER REQUIRED

Auxiliary Feedwater System
Palisades
Figure 1

ENCLOSURE 1

X.7 ST. LUCIE UNIT 1

AUXILIARY FEEDWATER SYSTEM

X.7.1 System Description

X.7.1.1 Configuration, Overall Design

A simplified flow diagram of the St. Lucie auxiliary feedwater system (AFWS) is shown in Figure 1. The AFWS consists of one full capacity turbine-driven pump (500 gpm @ 1200 psi) and two half capacity (250 gpm @ 1200 psi) motor-driven pumps. One turbine pump or both motor driven pumps are required to adequately remove decay heat. The turbine-driven pump supplies feedwater to two steam generators (SG) by means of two separate lines each with its own motor operated control valve. Each motor-driven pump normally supplies feedwater to one steam generator. A cross connection with two remote manual normally closed isolation valves is provided to enable the routing of feed flow of the two motor driven pumps to either steam generator. The AFWS is manually started from the control room. The AFW system can supply water to the SG(s), assuming a single active component failure with loss of offsite or onsite power. The licensee states that the AFWS is capable of cooling the plant down to the condition where the shutdown cooling system can be used to continue the safe plant shutdown process.

The primary water supply of the AFWS is maintained in a 250,000 gal.

seismic Category 1 condensate storage tank (CST) connected to the pumps' suction by redundant lines with locked open manual valves. A minimum of 168,000 gal. is reserved strictly for the AFWS by administrative control. The reserved water inventory is sufficient to maintain the plant at hot standby condition for 8 hours following a reactor trip, and subsequently cool the plant down to the shutdown cooling system cut-in temperature.

Low water level in the CST will alarm and annunciate in the main control room. The AFW pump suctions are connected only to the CST. Additional water may be supplied either from the SG Blowdown Monitor Storage Tank or the city water tanks via the CST as shown in Figure 1. Supplying water from these alternate sources requires considerable operator action and is estimated to take 3 hours to accomplish.

X.7.1.2 Components - Design, Classification

All components of the AFWS, including the primary water supply, are designed to seismic Category 1 requirements.

X.7.1.3 Power Sources

The steam turbine driven pump uses steam from the main steam lines taken upstream of each main steam isolation valve (MSIV) and exhausts to the atmosphere. The steam is supplied via an AC powered motor operated valve (MOV) from each steam generator. These valves are normally closed and fail as-is. Downstream of these valves there is a single

steam supply header with a DC powered MOV which is normally closed and fails as-is. The two motor driven pumps are powered from the Division A and B emergency diesel generators respectively in case of a loss of normal AC power.

X.7.1.4 Instrumentation and Controls

X.7.1.4.1 Controls

The control of auxiliary feedwater flow and steam generator water level is accomplished from the control room by remote manually operated control valves. A local control station is provided to facilitate plant shutdown if the control room is not accessible. All manually operated valves in the AFWS are locked open. The motor operated valves will fail in the "as-is" position.

X.7.1.4.2 Information Available to Operator

The important information available to the operator includes AFW discharge header flow, AFW discharge header pressure, CST level, steam generator level, steam pressure to steam driven AFW pump, and control valve position indication.

Additional information available is listed in the following instrument list:

Auxiliary Feedwater Parameters Available on RTGB 102. Vertical Section

1. Aux Feedwater Flow, Header 'A' FI-09-2A
2. Aux Feedwater Flow, Header 'B' FI-09-2B

3. Aux Feedwater Flow, Header 'C' FI-09-2C
4. Aux Feedwater Press. Header 'A' PI-09-8A
5. Aux Feedwater Press. Header 'B' PI-09-8B
6. Aux Feedwater Press. Header 'C' PI-09-8C
7. Steam Press. to Aux Feedpump 'C' PI-08-5
8. Condensate Storage Tank Level LIS-12-11
9. Aux Feed Pump '1A' Amperes
10. Aux Feed Pump '1B' Amperes

Auxiliary Feedwater Parameters on RTGB 102-Horizontal Section

1. AFW Pump 1A disch steam generator (SG) 1A MV-09-9 Switch and valve position lights.
2. AFW pump 1B disch to SG 1B MV-09-10 - switch and valve position lights.
3. AFW pump 1C disch to SG 1A MV-09-11 - switch and valve position lights.
4. AFW pump 1C Disch to SG 1B MV-09-12 - switch and valve position lights.
5. AFW pump 1A disch to SG 1B MV-09-13 - switch and valve position lights. (crossconnect valve)
6. AFW 1B disch to SG 1A MV-09-14 - switch and valve position lights. (crossconnect valve)
7. Start and stop switches for 1A, 1B and 1C Aux Feed Pumps and indicator lights.
8. 1C Aux Feed Pump speed controller and speed indicator.

9. 1C Aux Feed Pump steam inlet from 1A main steam line, MV-08-14 indicator lights.
10. 1C Aux Feed Pump steam inlet from 1B main steam line MV-08-13 indicator lights.
11. 1C Aux Feed Pump steam inlet MV-08-3 indicator lights.

X.7.1.4.3 Initiating Signals for Automatic Operation

The St. Lucie AFWS is a manually started system. In the event of a loss of main feedwater pumps or offsite power, followed by reactor trip the licensee estimates that the operator has approximately 13 minutes in which to start the AFW pump and open the AFW flow control valves to the steam generators to prevent the steam generators from boiling dry.

X.7.1.5 Testing

Each month the motor operated feed water valves are cycled from closed to full open to closed, after which each pump is started and operated at least 15 minutes. Specified minimum discharge pressure is verified while the pumps are operating. No manual valve lineup changes are required for this testing. Condensate storage tank level is verified at or above minimum at least once per 12 hours.

X.7.1.6 Technical Specifications

1. The two motor driven AFW pumps and the steam turbine driven AFW pump are all required to be operable when the reactor coolant system is above 325°F, the maximum operating temperature of the shutdown cooling system.

2. If any one pump is inoperable, it must be returned to operable status within 72 hours or the plant must be placed in hot standby within 12 hours.

3. If two or more pumps are inoperable, the plant must be in hot standby within 1 hour and in cold shutdown within 30 hours unless at least one pump is returned to operation and the unit is back under 2 above using the time intervals of the initial discovery.

4. The CST is required to have minimum volume of 116,000 gallons when the RCS temperature is above 325°F. If the volume is below minimum it must be restored within 4 hours or the plant must be in hot standby within the next 6 hours and in cold shutdown within the following 30 hours.

X.7.2 Reliability Evaluation Results

X.7.2.1 Dominant Failure Modes

The St. Lucie Unit 1 AFWS consists of two subsystems, i.e, one subsystem of two one-half capacity motor-driven pumps and another subsystem of a single full capacity turbine-driven pump. Either subsystem, when delivering its pumping capacity to at least one steam generator can provide for adequate decay heat removal for the three loss of main feedwater events considered.

The following failure modes were found to dominate the demand unavailability of the St. Lucie AFWS:

- Loss of feedwater (LOFW) with offsite AC available

  Failure to manually actuate the St. Lucie Unit 1 AFWS, was assessed to be the dominant failure mode and this fault contribution to the overall AFWS unavailability is estimated to be approximately 80 percent.

- LOFW with only onsite AC available

  St. Lucie Unit 1 uses a swing tie bus ("AB") that furnishes AC power to valves in the steam turbine driven portion of the AFWS. This bus is interlocked to prevent tie to more than one emergency diesel generator (EDG) simultaneously. The "AB" bus is normally tied to the "A" EDG. Thus, the limiting EDG failure would be failure of the "A" EDG. This failure requires human action to transfer bus "AB" to the available "B" EDG. The impact of this human action on the overall AFWS was assessed and found not to significantly alter the above results. Thus, failure to manually actuate AFWS remains the common dominant failure mode identified.

- LOFW with only DC available

  For this event, the St. Lucie Unit 1 AFWS design requires a plant operator to proceed to the local valve stations for the steam turbine driven train of the AFWS and open four AC motor

operated valves (2 steam and 2 water) that are normally closed. The licensee assessment of accessibility and the opening times indicate that this operation could be successfully accomplished by two men in about 5 minutes and one man in about 10 minutes. Human failure to open these valves has been assessed as the dominant fault contributor (~60%) for this event.

X.7.2.2. Principal Dependencies

The principal dependencies identified were those associated with human actions required to actuate the St. Lucie Unit 1 AFWS for the above three events.

X.7.3 Recommendations for this Plant

The short-term recommendations identified in this section represent actions to improve AFW system reliability that should be implemented by January 1, 1980, or as soon thereafter as is practicable. In general, they involve upgrading of Technical Specifications or establishing procedures to avoid or mitigate potential system or operator failures. The long-term recommendations identified in this section involve system design evaluations and/or modifications to improve AFW system reliability and represent actions that should be implemented by January 1, 1981, or as soon thereafter as is practicable.

X.7.3.1 Short-Term Recommendations

1. Recommendation GS-4 - Emergency procedures for transferring to alternate sources of AFW supply should be available to the plant operators. These procedures should include criteria to inform the operator when, and in what order, the transfer to alternate water sources should take place. The following cases should be covered by the procedures:

   The case in which the primary water supply is not initially available. The procedures for this case should include any operator actions required to protect the AFW system pumps against self-damage before water flow is initiated; and,

   The case in which the primary water supply is being depleted. The procedure for this case should provide for transfer to the alternate water sources prior to draining of the primary water supply.

2. Recommendation GS-5 - The plant should be capable of providing the required AFW flow for at least two hours from one AFW pump train independent of any alternating current power source. If manual AFW system initiation or flow control is required following a complete loss of alternating current power, emergency procedures should be established for manually initiating and controlling the system under these conditions. Since the water for cooling of the lube oil for the turbine-driven pump bearings may be

dependent on alternating current power, design or procedural changes shall be made to eliminate this dependency as soon as practicable. Until this is done, the emergency procedures should provide for an individual to be stationed at the turbine-driven pump in the event of the loss of all alternating current power to monitor pump bearing and/or lube oil temperatures. If necessary, this operator would operate the turbine-driven pump in an on-off mode until alternating current power sources is restored. Adequate lighting powered by direct current power sources and communications at local stations should also be provided if manual initiation and control of the AFW system is needed. (See Recommendation GL-3 for the longer-term resolution of this concern.)

3. Recommendation GS-6 - The licensee should confirm flow path availability of an AFW system flow train that has been out of service to perform periodic testing or maintenance as follows:

   - Procedures should be implemented to require an operator to determine that the AFW system valves are properly aligned and a second operator to independently verify that the valves are properly aligned.
   - The licensee should propose Technical Specifications to assure that prior to plant startup following an extended cold shutdown, a flow test would be performed to verify the normal flow path from the primary AFW

system water source to the steam generators. The flow test should be conducted with AFW system valves in their normal alignment.

4. Recommendation GS-8 - The licensee should install a system to automatically initiate AFW system flow. For the short term, this system need not be safety-grade; however, it should meet the criteria listed below, which are similar to Item 2.1.7a of NUREG-0578. For the longer term, the automatic initiation signals and circuits should be upgraded to meet safety-grade requirements as indicated in Recommendation GL-1.

   - The design should provide for the automatic initiation of the auxiliary feedwater system flow.
   - The automatic initiation signals and circuits should be designed so that a single failure will not result in the loss of auxiliary feedwater system function.
   - Testability of the initiating signals and circuits should be a feature of the design.
   - The initiating signals and circuits should be powered from the emergency buses.
   - Manual capability to initiate the auxiliary feedwater system from the control room should be retained and should be implemented so that a single failure in the manual circuits will not result in the loss of system function.

- The alternating current motor-driven pumps and valves in the auxiliary feedwater system should be included in the automatic actuation (simultaneous and/or sequential) of the loads to the emergency buses.
- The automatic initiation signals and circuits should be designed so that their failure will not result in the loss of manual capability to initiate the AFW system from the control room.

X.7.3.2 Additional Short-Term Recommendations

The following additional short-term recommendations resulted from the staff's Lesson Learned Task Force review and the Bulletins and Orders Task Force review of AFW systems at Babcock & Wilcox-designed operating plants subsequent to our review of the AFW system designs at W- and C-E-designed operating plants. They have not been examined for specific applicability to this facility.

1. Recommendation - The licensee should provide redundant level indications and low level alarms in the control room for the AFW system primary water supply to allow the operator to anticipate the need to make up water or transfer to an alternate water supply and prevent a low pump suction pressure condition from occurring. The low level alarm setpoint should allow at least 20 minutes for operator action, assuming that the largest capacity AFW pump is operating.

2. Recommendation - The licensee should perform a 72-hour endurance test on all AFW system pumps, if such a test or continuous period of operation has not been accomplished to date. Following the 72-hour pump run, the pumps should be shut down and cooled down and then restarted and run for one hour. Test acceptance criteria should include demonstrating that the pumps remain within design limits with respect to bearing/bearing oil temperatures and vibration and that pump room ambient conditions (temperature, humidity) do not exceed environmental qualification limits for safety-related equipment in the room.

3. Recommendation - The licensee should implement the following requirements as specified by Item 2.1.7.b on page A-32 of NUREG-0578:

> "Safety-grade indication of auxiliary feedwater flow to each steam generator shall be provided in the control room.
>
> The auxiliary feedwater flow instrument channels shall be powered from the emergency buses consistent with satisfying the emergency power diversity requirements for the auxiliary feedwater system set forth in Auxiliary Systems Branch Technical Position 10-1 of the Standard Review Plan, Section 10.4.9."

4. Recommendation - Licensees with plants which require local manual realignment of valves to conduct periodic tests on one AFW system train, and there is only one remaining AFW train available for operation should propose Technical Specifications to provide that a dedicated individual who is in communication with the control room be stationed at the manual valves. Upon instruction from the control room, this operator would realign the valves in the AFW system train from the test mode to its operational alignment.

X.7.3.3 Long-Term Recommendations

Long-term recommendations for improving the system are as follows:

1. Recommendation - GL-1 - Licensees with plants having a manual starting AFW system, should install a system to automatically initiate the AFW system flow. This system and associated automatic initiation signals should be designed and installed to meet safety-grade requirements. Manual AFW system start and control capability should be retained with manual start serving as backup to automatic AFW system initiation.

2. Recommendation - GL-3 - At least one AFW system pump and its associated flow path and essential instrumentation should automatically initiate AFW system flow and be capable of being operated independently of any alternating current power source for at least 2 hours. Conversion of direct current power to alternating current is acceptable.

3. Recommendation - The present method of supplying water from the alternate water sources to the CST for the AFWS requires considerable operator action and is estimated to take approximately three hours to accomplish. The licensee should modify the design to provide means to supply water to the AFWS from the alternate sources within one-half hour or less.

4. Recommendation - The St. Lucie plant needs one full capacity train of AFW flow (2 motor-driven or 1 turbine-driven AFW pump) for safe plant shutdown. This AFWS design does not meet the high energy line break criteria in SRP 10.4.9 and Branch Technical Position 10-1; namely that the AFWS should maintain the capability to supply the required AFW flow to the steam generator(s) assuming a pipe break anywhere in the AFW pump discharge lines plus a single active failure. The licensee should (1) complete an evaluation assuming such an event and determine any AFW system modifications or procedures necessary to maintain the required AFW flow to the steam generator(s), or (2) describe how the plant can be brought to a safe shutdown condition by use of other available systems following such a postulated event.

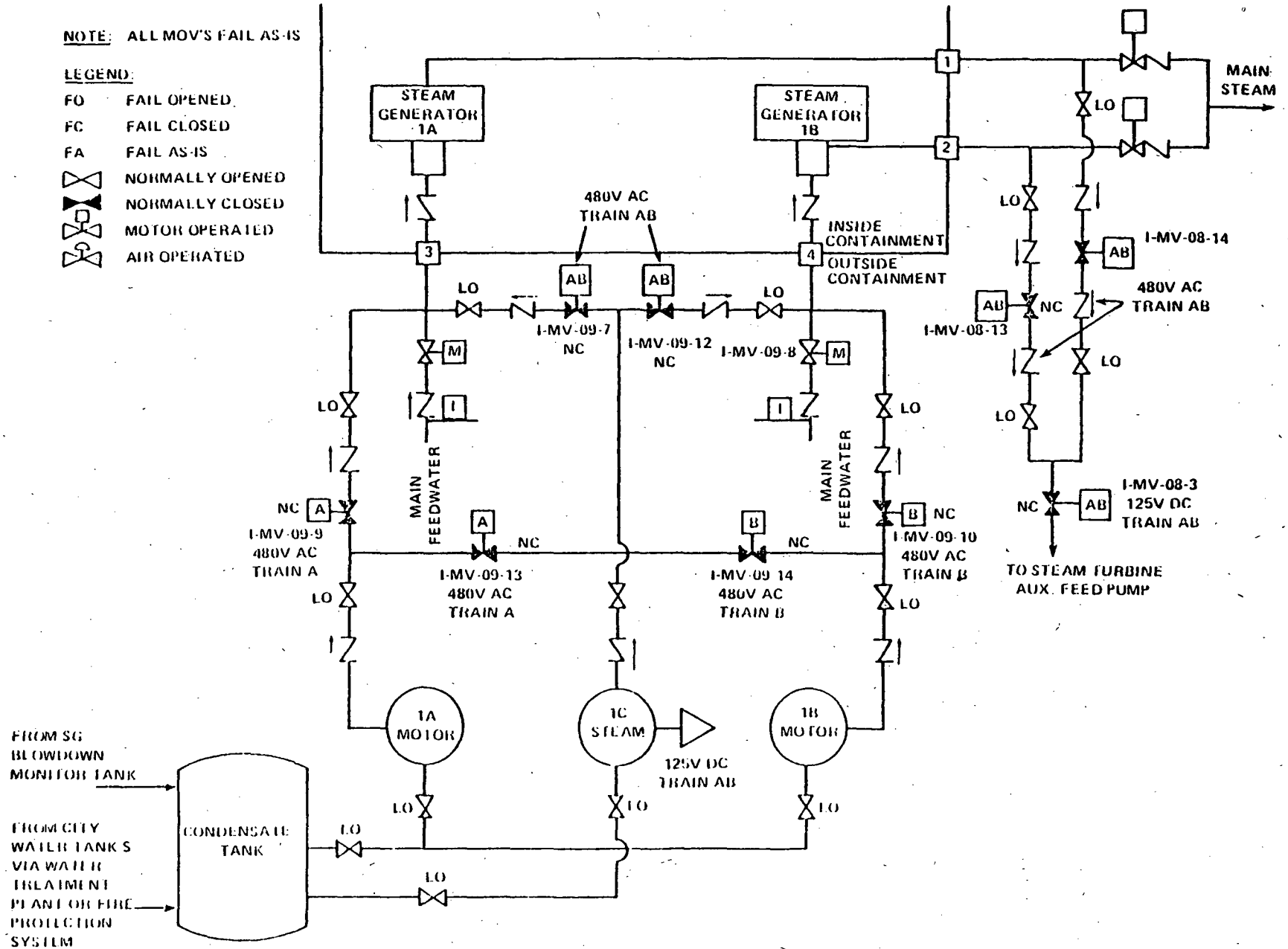

Auxiliary Feedwater System
St. Lucie, Unit 1
Figure 1

May 4, 1979

ANNEX 1 TO APPENDIX X

As part of its ongoing review of the Three Mile Island Unit 2 accident, the staff finds that it needs additional information regarding the auxiliary feedwater systems (AFWS). This information, as outlined below, is required to evaluate AFWS reliability for Combustion Engineering (CE) and Westinghouse (W) designed pressurized water reactors. The requested information is in addition to that requested in the IE bulletins, and should be brought to the meeting scheduled with the staff on May 8 thru May 12, 1979.

Written system description (as built), including:
- List of support systems for auxiliary feed system operation (both electric and steam)
- Water supplies for AFWS (primary and backup)

Current operating procedures and test and maintenance requirements, including:
- All LCOs for AFWS, main FW system and related support systems
- Listing of operator actions (local and/or control room) and timing requirements for such actions
- Procedure for reinitiating main feedwater flow

As built P&IDs with symbol keys including condensate and steam side

Legible equipment layout drawings, including:
- Isometrics, if available
- Identification of inhibits preventing accessibility to AFWS components and related electrical equipment

Relevant control systems description, including:
- Schematic or logic control diagrams
- Listing of actuation signals/logic and control
- MSIS logic for isolating AFWS, if installed
- Electric power dependencies
- All "readouts" available in control room for AFWS operation

AC and DC Power
- One line diagrams (normal and emergency power supplies)
- Divisional designation, e.g., Train A, Train B, requirements on all AFWS components and support systems
- List of normal valve states and loss-of-actuation power failure position

Operating Experience, including

- Number of main feedwater interruptions per year experienced to date for each unit
- Number of demands on AFWS per year to date (test and actual) for each unit
- Summary of AFWS malfunctions, problems, and failures

Provide available reliability analyses

Steam generator dry-out times (assuming loss of all feedwater flow, with 100% initial power, with reactor trip, no line breaks)

System design bases, including:

- Seismic and environmental qualification
- Code and quality, QA

NRC FORM 335 (7-77)

U.S. NUCLEAR REGULATORY COMMISSION

BIBLIOGRAPHIC DATA SHEET

1. REPORT NUMBER (Assigned by DDC): NUREG-0635

4. TITLE AND SUBTITLE (Add Volume No., if appropriate): Generic Evaluation of Feedwater Transients and Small Break Loss-of-Coolant Accidents in Combustion Engineering-Designed Operating Plants

2. (Leave blank)

3. RECIPIENT'S ACCESSION NO.

7. AUTHOR(S)

5. DATE REPORT COMPLETED

MONTH	YEAR
January	1980

DATE REPORT ISSUED

MONTH	YEAR
February	1980

9. PERFORMING ORGANIZATION NAME AND MAILING ADDRESS (Include Zip Code)

Bulletins and Orders Task Force
Office of Nuclear Reactor Regulation
U S Nuclear Regulatory Commission
Washington, D. C. 20555

6. (Leave blank)

8. (Leave blank)

12. SPONSORING ORGANIZATION NAME AND MAILING ADDRESS (Include Zip Code)

Same as 9. above

10. PROJECT/TASK/WORK UNIT NO.

11. CONTRACT NO.

13. TYPE OF REPORT

PERIOD COVERED (Inclusive dates)

15. SUPPLEMENTARY NOTES

14. (Leave blank)

16. ABSTRACT (200 words or less)

This report summarizes the results of our generic evaluation of feedwater transients, small break LOCAs, and other TMI-2-related events for the Combustion Engineering-designed operating plants, and confirms the bases for their continued operation. The results of this evaluation are presented in this report in the form of a set of findings and recommendations in each of the principal review areas.

17. KEY WORDS AND DOCUMENT ANALYSIS

17a. DESCRIPTORS

17b. IDENTIFIERS/OPEN-ENDED TERMS

18. AVAILABILITY STATEMENT: Unlimited

19. SECURITY CLASS (This report): Unclassified

20. SECURITY CLASS (This page)

21. NO. OF PAGES

22. PRICE $

NRC FORM 335 (7-77)

UNITED STATES
NUCLEAR REGULATORY COMMISSION
WASHINGTON, D. C. 20555

OFFICIAL BUSINESS
PENALTY FOR PRIVATE USE, $300

POSTAGE AND FEES PAID
U.S. NUCLEAR REGULATORY
COMMISSION

U.S. MAIL