ArevaEPRDCPEm Resource

From: WELLS Russell D (AREVA US) [Russell.Wells@areva.com]
Sent: Thursday, December 18, 2008 6:47 PM
To: Getachew Tesfaye
Cc: John Rycyna; Pederson Ronda M (AREVA US); BENNETT Kathy A (OFR) (AREVA US); DELANO Karen V (AREVA US); SLIVA Dana (EXT)
Subject: Response to U.S. EPR Design Certification Application RAI No. 70, FSAR Ch 8, Supplement 1
Attachments: RAI 70 Supplement 1 Response US EPR DC.pdf

Getachew,

AREVA NP Inc. provided responses to 2 of the 6 questions of RAI No. 70 on November 3, 2008. The attached file, "RAI 70 Supplement 1 Response US EPR DC.pdf" provides technically correct and complete responses to the remaining 4 questions, as committed.

Appended to this file are affected pages of the U.S. EPR Final Safety Analysis Report in redline-strikeout format which support the response to RAI 70 Questions 08.03.01-17 and 08.04-7.

The following table indicates the respective pages in the response document, "RAI 70 Supplement 1 Response US EPR DC.pdf" that contain AREVA NP's response to the subject questions.

Question #	Start Page	End Page
RAI 70 — 08.03.01-17	2	5
RAI 70 — 08.04-6	6	7
RAI 70 — 08.04-7	8	9
RAI 70 — 08.04-8	10	14

This concludes the formal AREVA NP response to RAI 70, and there are no questions from this RAI for which AREVA NP has not provided responses.

Sincerely,

(Russ Wells on behalf of)

Ronda Pederson
ronda.pederson@areva.com
Licensing Manager, U.S. EPR Design Certification
New Plants Deployment
AREVA NP, Inc.
An AREVA and Siemens company
3315 Old Forest Road
Lynchburg, VA 24506-0935
Phone: 434-832-3694
Cell: 434-841-8788

From: WELLS Russell D (AREVA NP INC)
Sent: Monday, November 03, 2008 8:06 PM
To: 'Getachew Tesfaye'
Cc: 'John Rycyna'; Pederson Ronda M (AREVA US); BENNETT Kathy A (OFR) (AREVA US); DELANO Karen V (AREVA US)
Subject: Response to U.S. EPR Design Certification Application RAI No. 70, FSAR Ch 8

Getachew,

Attached please find AREVA NP Inc.'s response to the subject request for additional information (RAI). The attached file, "RAI 70 Response US EPR DC.pdf" provides technically correct and complete responses to 2 of the 6 questions.

The following table indicates the respective pages in the response document, "RAI 70 Response US EPR DC.pdf," that contain AREVA NP's response to the subject questions.

Question #	Start Page	End Page
RAI 70 — 08.03.01-17	2	2
RAI 70 — 08.03.01-18	3	3
RAI 70 — 08.04-5	4	5
RAI 70 — 08.04-6	6	6
RAI 70 — 08.04-7	7	7
RAI 70 — 08.04-8	8	9

A complete answer is not provided for 4 of the 6 questions. The schedule for a technically correct and complete response to this question is provided below.

Question #	Response Date
RAI 70 — 08.03.01-17	December 18, 2008
RAI 70 — 08.04-6	December 18, 2008
RAI 70 — 08.04-7	December 18, 2008
RAI 70 — 08.04-8	December 18, 2008

Sincerely,

(Russ Wells on behalf of)
Ronda Pederson
ronda.pederson@areva.com
Licensing Manager, U.S. EPR Design Certification
New Plants Deployment
AREVA NP, Inc.
An AREVA and Siemens company
3315 Old Forest Road
Lynchburg, VA 24506-0935
Phone: 434-832-3694
Cell: 434-841-8788

From: Getachew Tesfaye [mailto:Getachew.Tesfaye@nrc.gov]
Sent: Friday, October 03, 2008 6:00 PM
To: ZZ-DL-A-USEPR-DL
Cc: Peter Kang; Michael Canova; Ronaldo Jenkins; Joseph Colaccino; John Rycyna
Subject: U.S. EPR Design Certification Application RAI No. 70 (675,676,961),FSAR Ch 8

Attached please find the subject requests for additional information (RAI). A draft of the RAI was provided to you on September 5, 2008, and discussed with your staff on September 18, 2008. Draft RAI Question 08.04-8 was modified as a result of that discussion. The schedule we have established for review of your application assumes technically correct and complete responses within 30 days of receipt of RAIs. For any RAIs that cannot be answered within 30 days, it is expected that a date for receipt of this information will be provided to the staff within the 30 day period so that the staff can assess how this information will impact the published schedule.

Thanks,
Getachew Tesfaye
Sr. Project Manager
NRO/DNRL/NARP
(301) 415-3361

Hearing Identifier: AREVA_EPR_DC_RAIs
Email Number: 71

Mail Envelope Properties (1F1CC1BBDC66B842A46CAC03D6B1CD41E10978)

Subject: Response to U.S. EPR Design Certification Application RAI No. 70, FSAR Ch 8, Supplement 1
Sent Date: 12/18/2008 6:47:25 PM
Received Date: 12/18/2008 6:47:29 PM
From: WELLS Russell D (AREVA US)

Created By: Russell.Wells@areva.com

Recipients:
"John Rycyna" <John.Rycyna@nrc.gov>
Tracking Status: None
"Pederson Ronda M (AREVA US)" <Ronda.Pederson@areva.com>
Tracking Status: None
"BENNETT Kathy A (OFR) (AREVA US)" <Kathy.Bennett@areva.com>
Tracking Status: None
"DELANO Karen V (AREVA US)" <Karen.Delano@areva.com>
Tracking Status: None
"SLIVA Dana (EXT)" <Dana.Sliva.ext@areva.com>
Tracking Status: None
"Getachew Tesfaye" <Getachew.Tesfaye@nrc.gov>
Tracking Status: None

Post Office: AUSLYNCMX02.adom.ad.corp

Files	**Size**	**Date & Time**
MESSAGE	4170	12/18/2008 6:47:29 PM
RAI 70 Supplement 1 Response US EPR DC.pdf	452186	

Options
Priority: Standard
Return Notification: No
Reply Requested: No
Sensitivity: Normal
Expiration Date:
Recipients Received:

Response to

Request for Additional Information No. 70, Supplement 1

10/3/2008

U. S. EPR Standard Design Certification
AREVA NP Inc.
Docket No. 52-020
SRP Section: 08.03.01 - AC Power Systems (Onsite)
SRP Section: 08.04 - Station Blackout
Application Section: SRP Section 8.3.1
EEB Branch

Question 08.03.01-17:

C.I.8.3.1.3 and C.I.8.3.2.3 of RG 1.206 identify a list of electrical system calculations (or studies) necessary for the onsite ac and dc distribution systems. The staff has requested a summary of the calculations and assumptions for items 1-4 (i.e., load flow, short circuit, equipment sizing, and coordination studies) in previous RAIs. Provide a similar summary of calculations (or studies) and assumptions used to demonstrate its adequacy for surge and lightning protection (item 5) on insulation coordination and power quality limits (harmonic distortion-item 6) as cited in the above RG 1.206. Also, indicate whether the above calculations should be performed and provided by COL applicants, as the calculations may require site-specific grid (interface) information.

Response to Question 08.03.01-17:

Insulation Coordination (Surge and Lightning Protection)

Insulation coordination coordinates insulation levels of electrical equipment with overvoltage protective devices such as surge arresters and transient voltage surge suppressors. Insulation coordination aims to minimize insulation failures and as a result reduces interruptions to service and expensive repairs. Achieving insulation coordination depends on site-specific parameters such as voltage transients, characteristics of equipment such as transformers, and the operating characteristics of surge arresters.

Surge arresters protect the electrical distribution system from lightning surges by verifying that lightning-induced voltage surges do not exceed the basic insulation level of conductors, transformers, motor control centers (MCC), and other equipment. Electrical system studies, including lightning traveling wave analysis, are required to balance the number and location of surge arresters with proposed insulation levels. Selecting a surge arrester rating is a balance between providing the lowest possible let-through voltage and the ability of the arrester to withstand temporary overvoltages.

Transient voltage surge suppressors are used as transient protection for sensitive equipment such as computers. IEEE Std. 1100-1999, “Recommended Practice for Powering and Grounding Electronic Equipment” (Reference 1) recommends using a two-stage protection concept. For large surge currents, the first diversion, typically by a surge arrester, is best accomplished at the service entrance to the building. Any residual voltage not seen by the first diversion can be safely handled by the transient voltage surge suppressors installed on 480 VAC buses in load centers, MCCs, panelboards, and switchboards. This cascaded effect provides transient protection for components serviced by this equipment. Specific vendor recommendations will be considered regarding the use of transient voltage surge suppressors in this equipment.

U.S. ERP FSAR Tier 2, Section 8.3.1.3.5 will be revised to add the following:

> “Insulation coordination is defined as the selection of insulation strength consistent with expected overvoltages to obtain an acceptable risk of failure. The degree of coordination is measured by the protective ratio, which is the ratio of the insulation withstand level to the voltage at the protected equipment. Three protective ratios are analyzed, comparing protective levels with corresponding insulation withstands.

$$PR_{L1} = \frac{CWW}{FOW}$$

$$PR_{L2} = \frac{BIL}{LPL}$$

$$PR_{S} = \frac{BSL}{SPL}$$

Where:

PR_{L1}	Lightning impulse protective ratio
PR_{L2}	Lightning impulse protective ratio
PR_{S}	Switching impulse protective ratio
CWW	Chopped wave withstand
FOW	Front-of-wave protection level
BIL	Basic lightning impulse insulation level
LPL	Lightning impulse protective level
BSL	Basic switching impulse insulation level
SPL	Switching impulse protective level

Acceptable coordination is achieved if PR_{L1} and PR_{L2} are equal to or greater than 1.2, and PR_{S} is equal to or greater than 1.15. An analysis is performed to verify acceptable insulation coordination on surge arresters installed on the as-built MSUs, EATs, and NATs."

U.S. EPR FSAR Tier 1, Section 2.5.8 will be revised to indicate that "Insulation coordination is achieved on surge arresters on main step-up transformers (MSU), normal auxiliary transformers (NAT) and emergency auxiliary transformers (EAT)."

U.S. EPR FSAR Tier 2, Figure 8.3-2—Emergency Power Supply System Single Line Drawing, Sheet 1 of 3, will be revised to remove the surge arresters from the emergency auxiliary transformer secondary windings.

U.S. EPR FSAR Tier 2, Figure 8.3-3—Normal Power Supply System Single Line Drawing, Sheet 1 of 4, will be revised to remove the surge arresters from the normal auxiliary transformer secondary windings.

U.S. EPR FSAR Tier 1, Table 2.5.8-1—Lightning Protection and Grounding System Inspections, Tests, Analysis, and Acceptance Criteria, Commitment Wording column, will be revised to add "Insulation coordination is achieved on surge arresters on MSUs, NATs and EATs." The Inspection, Test or Analyses column will be revised to indicate that "An analysis will be performed." The Acceptance Criteria column will be revised to indicate that: "a) The lightning impulse protective ratio of the chopped wave withstand to the front-of-wave protection level is equal to or greater than 1.2; b) The lightning impulse protective ratio of the basic lightning impulse insulation level to the lightning impulse protective level is equal to or greater than 1.2; c) The switching impulse protective ratio of the basic switching impulse insulation level to the switching impulse protective level is equal to or greater than 1.15."

Power Quality Limits

The emergency power supply system (EPSS) and the Class 1E uninterruptible power supply (EUPS) system provide electrical power to safety-related and some non-safety-related loads so that plant safety functions can be performed. In the process, some connected loads and some EPSS and EUPS components generate harmonics. Where practical, the component design limits the harmonics transmitted to the loads and other distribution system buses (e.g., 12 pulse, 18 pulse, or 24 pulse converters are used instead of six pulse converters). The distribution system design also minimizes the effects of harmonics generated by the connected loads (e.g., distribution system transformers are connected in a "delta-wye" configuration that traps third harmonics).

Final EPSS and EUPS total harmonic distortion (THD) is required to be calculated using as-procured equipment information to verify the system THD is within the guidelines of IEEE Std 519-1992, "IEEE Recommended Practices and Requirements for Harmonic Control in Electrical Power Systems" (Reference 2). To verify that the as-built distribution system THD is within acceptable limits, U.S. EPR FSAR Tier 1, Section 2.5.2, ITAAC Item 5.19 will be added to verify distribution system calculations. The U.S. EPR FSAR Tier 2, Section 8.3.1.3.6 will be revised to add, "An analysis will be performed to verify the THD present on the Class 1E buses is less than or equal to 5 percent."

U.S. EPR FSAR Tier 1, Section 2.5.1, Item 5.19 will be added to state that, "Harmonic distortion does not prevent safety-related equipment from performing safety functions."

ITAAC Item 5.19 will be added to U.S. EPR FSAR Tier 1, Table 2.5.1-3—Class 1E Emergency Power Supply System Inspections, Tests, Analyses, and Acceptance Criteria. The Commitment Wording column will state that, "Harmonic distortion does not prevent safety-related equipment from performing required safety functions." The Inspection, Test or Analysis column will state, "An analysis will be performed." The Acceptance Criteria column will state that, "Analysis of the EPSS concludes total harmonic distortion does not exceed 5 percent voltage distortion on the EPSS buses."

References for Question 08.03.01-17:

1. IEEE Std 1100-1999, “Recommended Practice for Powering and Grounding Electronic Equipment,” Institute of Electrical and Electronics Engineers, 1999.
2. IEEE Std 519-1992, “IEEE Recommended Practices and Requirements for Harmonic Control in Electrical Power Systems,” Institute of Electrical and Electronics Engineers, 1992.

FSAR Impact:

U.S. EPR FSAR Tier 1, Section 2.5.1, Item 5.19 and associated ITAAC and Section 2.5.8, Item 2.1 and associated ITAAC will be revised as described in the response and as indicated on the enclosed markup. U.S. EPR FSAR Tier 2, Section 8.3.1.3.5, Section 8.3.1.3.6, Figure 8.3-2, and Figure 8.3-3 will be revised as described in the response and as indicated on the enclosed markup.

Question 08.04-6:

On FSAR Page 8.4-12, item 7 of SBO timeline states that "thirty minutes into the event, two EFW pumps are started and begin feeding four SGs." Since the US-EPR design provides two station blackout diesel generators (SBODGs) and each SBODG powers one EFW pump, US-EPR is designed to use two SBODGs for a postulated SBO event. However, page 8.4-6 (8.4.2.1) states that "Each SBODG has sufficient capacity to bring and maintain the plant in a safe shutdown condition, to continue core cooling, and to maintain containment integrity during an SBO." With one SBODG, how long it will take to bring the plant in a safe shutdown condition (i.e., cold shutdown)? How long it will take with two SBODGs? SBO tables 8.4-1 and 2 do not show any makeup water and residual heat removal equipment. Comment whether US-EPR can cope with an SBO without these equipment.

Response to Question 08.04-6:

U.S. EPR Station Blackout (SBO) Mitigation Strategy, Two SBODGs Operating

The U.S. EPR SBO mitigation strategy provides and maintains adequate core cooling during the eight-hour SBO coping duration that utilizes two SBODGs to power the necessary SBO mitigation equipment. At the onset of the SBO event, both SBODGs automatically start and are prepared for loading. Within 10 minutes, the operator aligns the SBODGs to energize electrical buses that will power SBO mitigation equipment (e.g., Trains 1 and 4 emergency feedwater (EFW) pumps and safety chilled water systems (SCWSs)) in Divisions 1 and 4 and power uninterruptible power supply (UPS) systems in electrical Divisions 1, 2, 3, and 4. Energizing UPS power verifies that the two-hour Class 1E UPS (EUPS) systems in all divisions remain powered, via associated battery chargers, for the eight-hour SBO coping duration. At 15 minutes, the operator initiates cooling to the main control room (MCR) and Safeguard Buildings (SBs) 1 and 4. At 21 minutes, the operator will initiate cooling to SBs 2 and 3. At approximately 30 minutes following the onset of the SBO, the operator starts two EFW pumps and opens the EFW pump discharge header crosstie valves. This provides EFW to all four steam generators (SGs) and the SG level is controlled automatically. The SG levels stop decreasing and recover continuously to their normal post-trip value within approximately two hours of the event initiation and are maintained through level control for the remainder of the SBO coping duration. Steaming is done automatically by the associated four main steam relief trains (MSRT) with SG pressure controlled at the normal post-trip value for the remainder of the SBO coping duration. The SBO mitigation and adequate core cooling are successfully accomplished during the eight-hour SBO coping duration by maintaining the plant in the appropriate safe shutdown condition defined for U.S. EPR as hot standby (Mode 3). The Response to Question 08.04-8 provides the basis for the use of the term "safe shutdown" for the U.S. EPR SBO mitigation strategy.

Beyond U.S. EPR SBO Mitigation Strategy, One SBODG Operating

Note: The one SBODG case, while sufficient to bring and maintain the plant in a safe shutdown condition, is beyond the U.S. EPR SBO mitigation strategy design. It is provided only to show the plant capacity and robustness to respond to this event.

In the unlikely event that offsite power (two independent offsite lines), onsite power (four emergency diesel generators (EDGs)), and one SBODG are unavailable, the core can still be cooled for the eight-hour SBO coping duration using the remaining SBODG. The single SBODG scenario requires additional operator actions to crosstie EFW pools and de-energize

electrical equipment in Safeguards Building 1 and 2 or 3 and 4 depending on which SBODG (i.e., XKA50 or XKA80) is operating. Because only one SBODG is available, only two emergency power supply system (EPSS) divisions can be reenergized (i.e., either Division 1 and 2, or Division 3 and 4). Valves requiring operation in the divisions without a SBODG-powered battery charger are exercised before EUPS battery depletion when all EUPS divisions are still available via their two-hour batteries. The operator actions for the one SBODG case are similar to the two SBODG case, except in the one SGODG case, only two EPSS divisions (i.e., either Divisions 1 and 2 or Divisions 3 and 4) can be reenergized as previously noted. Thus, only two SGs can be fed and steamed, which, like the two SBODG case, uses automatic controls to feed with one EFW pump and steam with two MSRTs. The SG levels for the two SGs being fed and steamed stop decreasing and recover continuously to their normal post-trip value within approximately one hour of the event initiation and are maintained through level control for the remainder of the SBO coping duration. Steaming is done automatically by the associated two MSRTs with SG pressure being controlled at the normal post-trip value for the remainder of the SBO coping duration. The two SGs not being fed dry out. The SBO mitigation and adequate core cooling are successfully accomplished during the eight-hour SBO coping duration by maintaining the plant in the appropriate safe shutdown condition defined for U.S. EPR as hot standby (Mode 3). The Response to Question 08.04-8 provides the basis for the use of the term “safe shutdown” for the U.S. EPR SBO mitigation strategy.

U.S. EPR FSAR Tier 2, Table 8.4.1 and Table 8.4.2 SBO Estimated Loading

In the two SBODG or one SBODG scenario, makeup water and residual heat removal (RHR) equipment is not required for successful SBO mitigation during the eight-hour SBO coping duration. Analyses were performed to verify that adequate reactor coolant inventory is maintained during this eight-hour duration without makeup. In addition, adequate heat removal is provided through the feeding and steaming of the required number of SGs for each SBODG case. Without makeup or RHR equipment, SBO mitigation and adequate core cooling is successfully accomplished during the eight-hour SBO coping duration and the plant is maintained in the appropriate safe shutdown condition defined for U.S. EPR as hot standby (Mode 3). The Response to Question 08.04-8 provides the basis for the use of the term “safe shutdown” for the U.S. EPR SBO mitigation strategy.

FSAR Impact:

The U.S. EPR FSAR will not be changed as a result of this question.

Question 08.04-7:

SBO timeline (10 minutes into an SBO event-No. 4) indicates that "operator actions are begun to limit reactor coolant inventory losses through letdown, sampling and pressurizer degasification connections." Is the operator action alone adequate to maintain coolant inventory without makeup water system for an SBO event? The timeline also indicates that "the HVAC equipment in divisions 1 and 4 can be restored. Some Safeguards Building areas may briefly exceed 122°F before HVAC is restored." Comment whether the temperature exceedance of the Safeguard building areas would damage any equipment.

Response to Question 08.04-7:

Operator Actions during Station Blackout (SBO)

The operator actions to limit reactor coolant inventory losses during the SBO event maintain coolant inventory without makeup water. SBO mitigation and adequate core cooling is successfully accomplished during the eight-hour SBO coping duration by maintaining the plant in the appropriate safe shutdown condition defined for U.S. EPR as hot standby (Mode 3). The Response to Question 08.04-8 provides the basis for the use of the term "safe shutdown" for the U.S. EPR SBO mitigation strategy.

The operator actions taken to limit the reactor coolant inventory losses are as follows:

- Letdown Flow

  Letdown flow is terminated at the onset of the SBO event by automatic action.

  U.S. EPR FSAR Tier 2, Section 8.4.2.6.2 will be revised to indicate that letdown flow is terminated at the beginning of the SBO event.

- Reactor Coolant System (RCS) Sampling and Pressurizer (PZR) Degasification Flows

  The combined mass associated with the RCS sample and PZR degas represents ~123 ft^{-3} for the eight-hour SBO coping period. Not terminating these flows will not adversely affect successful mitigation of the SBO. Their isolation is a conservative SBO mitigation action.

Safeguard Building Temperatures during Station Blackout

No equipment damage will result from the referenced temperature excursion. This temperature excursion takes place during the 15 minutes assumed for HVAC restoration in Divisions 1 and 4, and 21 minutes assumed for heating, ventilation, air conditioning (HVAC) restoration in Divisions 2 and 3. The short time these areas are without HVAC limits the potential for temperature rise and equipment heatup, therefore preventing equipment damage.

The Safeguard Building (SB) room heatup is modeled using conservative assumptions. These assumptions include 2 Watts/sq. ft. heat loss from lighting systems (higher in some of the smaller rooms), 115°F external ambient temperature, zero radiation heat transfer, and zero equipment heat capacity. Equipment heat losses are estimated using component test data or from data sheets for commercially available equipment in lieu of U.S. EPR-specific details, which will be developed later in the design process.

The over-temperature conditions occur only in select areas and for a brief period of time. The most significant individual equipment heat load comes from the Class 1E uninterruptible power supply (EUPS) system inverters. These inverters are in relatively small rooms and the temperature inside the inverters will be higher than the bulk room temperature. At the time of the peak room temperature, the inverter load is a fraction of the inverter rating. Consequently, the inverter internal temperature rise is less than at full rated load, and through proper specification of the inverters during the procurement process, this equipment can be selected so that no damage occurs. Other temperature-sensitive equipment in this room includes the battery chargers, but the chargers do not operate until power (and HVAC) is restored.

The instrumentation and controls (I&C) cabinet areas may also briefly exceed 122°F. These rooms are larger and experience a smaller temperature excursion. The temperatures in these areas are within the design capabilities of the associated equipment, and no damage will occur.

The conservative assumptions made for the SB room heatup model provide a bounding worst-case condition and indicate that equipment damage is not expected to occur.

FSAR Impact:

The U.S. EPR FSAR Tier 2, Section 8.4.2.6.2 will be revised as described in the response and as indicated on the enclosed markup.

Question 08.04-8:

AREVA's response to Question 08.04-1 (RAI 11) regarding to the sizing of alternate ac (AAC) power source for meeting 10 CFR 50.63 conflicts with the staff's understanding of the applicability of SECY-94-084. The staff disagrees with your statement that the required end state of operating mode has not been identified. You referenced: (1) the staff recommendation of SECY-90-016, "Evolutionary Light Water Reactor (LWR) Certification Issues and Their Relationship to Current Regulatory Requirements," January 12, 1990, which it states "The staff believes that the preferred method of demonstrating compliance with 10 CFR 50.63 is through the installation of a spare (full capacity) alternate ac power source of diverse design that is consistent with the guidance in Regulatory Guide 1.155, and is capable of powering at least one complete set of normal safe shutdown loads" and (2) the Commission's approval of the staff's recommendations of SECY-90-16, by the letter dated June 26,1990. Based on the above "safe shutdown," you interpret the operating mode as "hot standby" and sized the alternate ac (AAC) power source accordingly.

The Commission approval is based on: (1) installing a spare (full capacity) AAC power source of diverse design, and (2) it be capable of powering at least one complete set of normal safe shutdown loads. At the time the Commission approved the staff position as documented above, they recognized that this requirement meant to be more restrictive than meeting 10 CFR 50.63, in that an AAC should be fully capable of powering at least one complete set of equipment necessary to achieve and maintain safe shutdown without requiring complicated operator actions for load management. The staff interprets that "normal safe shutdown loads" means to bring the plant to "cold shutdown."

Further clarification to cold shutdown has been documented in the Draft Safety Evaluation Report (DSER) on Chapter 11 of the Advanced Light Water Reactor (ALWR), "Requirements Document for Evolutionary Plant Designs," dated March 1991, where it states, "For station blackout purposes, however, the combustion turbine generator should be the primary means of coping with station blackout and bringing the plant to a cold-shutdown condition in an evolutionary ALWR plant. Therefore, the staff concludes that, as a minimum, the combustion turbine generator should be capable of powering one safety division and one division of permanent non-safety loads during the worst-case shutdown (to cold shutdown) and that it should have the capability to power these loads with some margin for load growth when operating within its continuous rating."

In SECY 94-084, it also includes staff's clear understanding of the required end state of operating mode, where it states that the preferred method of demonstrating compliance with 10 CFR 50.63 for evolutionary design to be a spare full-capacity AAC power source of a diverse design and that the AAC power source powers a larger complement of shutdown equipment to bring the plant to cold shutdown.

The acceptance criteria for sizing AAC power sources (item No.3) for meeting 10 CFR 50.63 in the Standard Review Plan (SRP) requires that "the Commission has established a policy (SECY-90-016) that such plants should have an AAC power source of diverse design and capable of powering at least one complete set of normal shutdown loads."

Based on the above documents, the size of AAC power source provided in the current EPR plant design for 10 CFR 50.63 requirements does not fully meet the staff position documented in

the above SECYs (90-016 and 94-084), SRP acceptance criteria, and DSER for the ALWR plant designs. Please explain how EPR Plant design intends to satisfy the above staff position.

Response to Question 08.04-8:

Based on concerns about station blackout (SBO) risk and associated emergency diesel generator (EDG) reliability, the U.S. Nuclear Regulatory Commission (NRC) established Task Action Plan (TAP) A-44 in 1980. NUREG-1032, "Evaluation of Station Blackout Accidents at Nuclear Power Plants" (Reference 1) integrated many of the efforts performed as part of TAP A-44. In 1988, the NRC also issued the SBO rule,10 CFR 50.63, and the accompanying Regulatory Guide (RG) 1.155. 10 CFR 50.63 requires that plants are able to withstand a SBO for a specified duration while maintaining core cooling. As a result of 10 CFR 50.63, plants are required to enhance procedures and training for restoring offsite and onsite AC power sources. In addition, some plants chose to make modifications such as adding additional emergency AC power sources. Emphasis is also placed on establishing and maintaining high reliability of the emergency power sources.

AREVA NP has evaluated the design for the SBO diesels in compliance with 10 CFR 50.63, which references 10 CFR 50.2 as the required plant end state (hot standby) in order to determine the required SBO loading requirements. In addition, AREVA NP follows the guidance provided in Regulatory Guide 1.155.

In November 1987, NUMARC (subsequently renamed NEI) submitted NUMARC 87-00, "Guidelines and Technical Bases for NUMARC Initiatives Addressing Station Blackout at Light Water Reactors" (Reference 2) as an alternative to comply with 10 CFR 50.63. NUMARC 87-00 follows RG 1.155 and adds prescriptive, practical guidance to help the industry implement RG 1.155. NUMARC 87-00 addresses risk reduction by requiring the following: taking action to reduce the risk if the licensees falls into the 8- or 16-hour coping category; establishing procedures to cope with an SBO, restore AC power following an SBO, and prepare for severe weather; reducing EDG cold fast starts for testing; and monitoring AC power unavailability by providing data to the Institute of Nuclear Power Operations on a regular basis. By reference in RG 1.155, the NRC staff concludes that NUMARC 87-00 contains guidance acceptable for meeting 10 CFR 50.63. Since 1989, the industry has used the Emergency Power System (EPS) unavailability as an industry safety system performance indicator that has consistently shown improvement to date.

AREVA NP is aware of the analyses and design approaches used in order to effectively implement 10 CFR 50.63 for operating plants using NRC regulations and the guidance documents mentioned above. The implementation of the U.S. EPR electrical design is consistent with other NRC approved industry SBO designs.

Advanced light water reactor designs pose no additional core damage frequency (CDF) risk and other designs have been licensed for hot standby (e.g., ABWR). Since the publication of 10 CFR 50.63 and regulatory and industry guidance, several risk-based studies have been performed that the NRC commissioned. Two recent studies are NUREG-1776, "Regulatory Effectiveness of the Station Blackout Rule" (Reference 3) and NUREG/CR-6890, "Reevaluation of Station Blackout Risk at Nuclear Power Plants-Analysis of Station Blackout Risk" (Reference 4).

Below are relevant excerpts from the NUREGs, with emphasis added.

NUREG-1776, August 2003:

Conclusion

"**The report's conclusion is that the SBO rule was effective considering that the risk expectations were achieved**, and that industry and NRC costs to implement the SBO rule were reasonable. In implementing the SBO rule, some plants made hardware modifications (e.g., the addition of diesel generator or gas turbine generator power supplies); and all plants generally maintained EDG reliability at 0.95 or better, and established SBO coping and recovery procedures. Consequently, **the plants have gained SBO coping capability, reduced risk**, **increased the tolerance to a loss of ac offsite or onsite power**, and many plants benefited economically from the addition of power supplies."

NUREG/CR-6890, December 2005:

Abstract

"This report is an update of previous reports analyzing loss of offsite power (LOOP) events and the associated station blackout (SBO) core damage risk at U.S. commercial nuclear power plants. LOOP data over the period 1986–2004 were collected and analyzed. Frequency and duration estimates for critical and shutdown operations were generated for four categories of LOOPs: plant centered, switchyard centered, grid related, and weather related. Overall, LOOP frequencies during critical operation have decreased significantly in recent years, while LOOP durations have increased. To obtain SBO results, updated LOOP frequencies and offsite power nonrecovery curves were input into standardized plant analysis risk (SPAR) models covering the 103 operating commercial nuclear power plants. Core damage frequency results indicating contributions from SBO and other LOOP-initiated scenarios are presented for each of the 103 plants, along with plant class and industry averages. In addition, a comprehensive review of emergency diesel generator performance was performed to obtain current estimates for the SPAR models. **Overall SPAR results indicate that core damage frequencies for LOOP and SBO are lower than previous estimates. Improvements in emergency diesel generator performance contribute to this risk reduction**."

Summary and Conclusion

"SBO coping features were defined in this study to include all components, phenomena, and recoveries modeled in the SPAR SBO event trees. For components modeled in these event trees, such as TDPs, HPCS MDPs supported by EDGs, and DDPs, updated performance data were collected and evaluated, similar to what was done for the EDGs. **In all cases, the historical URs (unreliability) of these components show improving trends.**

Finally, the resulting SPAR models were quantified to obtain total CDF, total LOOP CDF, LOOP (non-SBO) CDF, and SBO CDF. In addition, the EPS failure probabilities were quantified, such that the SBO coping failure probabilities could be determined. Results indicate an industry average SBO CDF (point estimate) of 3.0E−6/rcry. (Individual plant results range from five times higher to 100 times lower than this industry average.)

> Results were compared with historical estimates of SBO CDF, ranging from approximately 1980 to the present. Again, **these historical estimates show improving trends**. **The historical reduction in SBO CDF** is probably the result of many changes plant modifications made in response to the SBO rule, improvements in plant risk modeling, and improved component performance." However**, the major contributor for this historical reduction appears to be improved EDG performance**."

NUREG-1776 and NUREG/CR-6890 are based on plant designs which typically have only two emergency diesels and are influenced by emergency diesel reliability. The results of these studies reinforce the applicability of the existing regulations in protecting the health and safety of the public. Historically, the industry has addressed SBO by following the NUMARC 87-00 guidelines and RG 1.155 in order to comply with 10 CFR 50.63.

Based on the NRC studies, AREVA NP concludes that the trends in the risks related to both the potential for occurrence of a SBO event and the consequences of such an event are trending in a safe direction and reduced risk. Furthermore, even though a slight increase in duration has been calculated, the overall CDF is reduced compared to previous assumptions and calculations. Also, the slight increase in durations is covered by the existing coping times allowed by current regulation. The U.S. EPR electrical system design incorporates an additional margin through more emergency diesels (four) and an additional SBO diesel than other plants evaluated in the studies. When compared to NUREG-1776 and NUREG/CR-6890 studies, the U.S. EPR design configuration not only meets regulatory requirements, but has an additional margin. The U.S. EPR design shifts the CDF value to the lower end of the risk range when compared to the results presented in the studies. As shown in U.S. EPR FSAR Tier 2, Figure 19.1-4—U.S. EPR Initiating Events Contributions - Level 1 Internal Event, the SBO CDF for the U.S. EPR is approximately 3.0 E-8/year. Therefore, the current U.S. EPR electrical system design creates no additional unresolved safety issues (USI) that existing regulations do not cover. AREVA NP has applied additional conservatism in establishing the coping requirements for the SBO diesel (eight hours) to cover a variety of potential plant sites. AREVA NP interprets the term "normal safe shutdown loads" used in SECY documents as the equipment required to maintain the plant in the 10 CFR 50.2 definition of the safe end state (hot standby). AREVA NP understands of the use of “full capacity” as powering the loads required to maintain the plant in a safe state condition (hot standby) for the required coping duration, which is eight hours for the U.S. EPR.

Regarding overall plant safety, AREVA NP does not believe that going to cold shutdown under SBO conditions is a "preferred method" that improves safety without an objective, risk-informed safety analysis basis. Following an SBO event, the operating staff will focus on stabilizing the plant and restoring at least one source of emergency power and an offsite power source. The goal of the plant staff should be to achieve these plant conditions within the analyzed coping duration. AREVA NP does not believe that it will be safer under SBO conditions to subject the plant to maneuvers that require additional plant staff attention and entail more manual actions in other areas of the plant. Cooling the plant under SBO conditions requires other safety considerations, such as maintaining shutdown margin, that are less of a concern while maintaining the plant in a hot standby condition.

Additionally, AREVA NP considers the difference in diesel design for diversity to include not only the type of prime mover and generator, but the sizing of the diesel components. Larger diesels detract from the overall concept of diversity and maintainability and reliability for beyond design basis event (BDBE) additional plant equipment.

AREVA NP is not aware of the NRC staff's quantitative safety analysis that contradicts the information in NUREG-1776 and NUREG/CR-6890 and the NRC staff's supporting safety analysis basis for any SBO duration beyond what is required by 10 CFR 50.63 and related regulatory guidance. Further, AREVA NP notes the significant effort by the NRC to update its regulations and guidance documents in support of the review of new reactor applications. One purpose of the update was to incorporate high priority changes, as well as “historical” positions in SECY papers, into the regulations and associated guidance documents. AREVA NP has found no evidence in the updates to the regulations or the guidance documents (such as RG 1.206 and NUREG-0800) to indicate that the NRC staff has incorporated positions modifying the regulatory basis for SBO.

AREVA NP does not intend to alter the U.S. EPR electrical system design as described in U.S. EPR FSAR Tier 2, Section 8.4. AREVA NP is not aware of any risk-based SBO CDF analysis that identifies new safety-significant risks that justify an extensive redesign of the U.S. EPR electrical system. The NRC recommendations in the referenced SECY documents appear to be subjective, an expansion of the current rule, and unsupported by a quantitative safety analysis basis. The U.S. EPR is in compliance with 10 CFR 50.63 and 10 CFR 50.2 and conforms to the guidance provided in RG 1.155. The U.S. EPR design incorporates an additional emergency power system redundancy and an additional SBO diesel, which exceeds the original design basis for the existing regulatory requirements that provide adequate protection of the health and safety of the public.

References for Question 08.04-8:

1. NUREG-1032, “Evaluation of Station Blackout Accidents at Nuclear Power Plants,” 1988.
2. NUMARC 87-00, “Guidelines and Technical Bases for NUMARC Initiatives Addressing Station Blackout at Light Water Reactors,” November 1987.
3. NUREG-1776, "Regulatory Effectiveness of the Station Blackout Rule," August 2003.
4. NUREG/CR-6890, "Reevaluation of Station Blackout Risk at Nuclear Power Plants-Analysis of Station Blackout Risk," December 2005.

FSAR Impact:

The U.S. EPR FSAR will not be changed as a result of this question.

U.S. EPR Final Safety Analysis Report Markups

5.6 With the alternate feed installed from EPSS division 3 to division 4; independence is maintained between the load group created by EUPS divisions 3 and 4, and divisions 1 and 2. EUPS divisions 1 and 2 are independent of each other.

5.7 With the alternate feed installed from EPSS division 4 to division 3; independence is maintained between the load group created by EUPS divisions 3 and 4, and divisions 1 and 2. EUPS divisions 1 and 2 are independent of each other.

5.8 EUPS Class 1E cables and cable raceways are marked according to their respective division color-code.

5.9 ~~Physical separation or electrical isolation exists between Class 1E divisions and between Class 1E divisions and non-Class 1E cables~~Deleted.

5.10 EUPS switchboards, MCCs, transformers, panelboards, and converters as listed in Table 2.5.2-2 and their feeder breakers and load breakers are sized to supply their load requirements.

5.11 EUPS cables and buses are sized to supply their assigned load requirements.

5.12 Each EUPS battery is able to provide power for starting and operating design loads for a minimum of two hours when the ac supply to the battery charger is lost.

5.13 Each EUPS battery charger supplies assigned EUPS loads while maintaining the respective EUPS battery charged.

5.14 The EUPS inverters are sized to power the design EUPS loads on the respective supplied MCC.

5.15 EUPS operating voltage remains within the terminal voltage range of the supplied safety-related equipment during the battery duty cycle.

5.16 EUPS switchboards, MCCs, transformers and panelboards listed in Table 2.5.2-2 are rated to withstand fault currents for the time required to clear the fault from its power source.

5.17 The feeder and load circuit breakers for EUPS switchboards, MCCs and panelboards are rated to interrupt fault currents.

08.03.01-17

5.18 EUPS interrupting devices (e.g., circuit breakers and fuses) are coordinated so that the circuit interrupting device closest to the fault is designed to open before other devices.

5.19 Harmonic distortion does not prevent safety-related equipment from performing safety functions.

6.0 Inspection, Tests, Analyses and Acceptance Criteria

6.1 Table 2.5.2-3—Class 1E Uninterruptible Power Supply Inspections, Tests, Analyses, and Acceptance Criteria, provides the ITAAC for the EUPS.

2.5.8 Lightning Protection and Grounding

1.0 Description

08.03.01-17

The lightning protection and grounding system provides equipment grounding and instrumentation and control system grounding.

2.0 Electrical Considerations

2.1 ~~Lightning protection is~~ Surge arrestors are provided for main step-up transformers (MSU), normal auxiliary transformers (NAT) and emergency auxiliary transformers (EAT).

2.2 Main generator, emergency diesel generator (EDG) and station blackout diesel generator (SBODG) neutrals are bonded to the station ground grid.

2.3 AC distribution system transformer neutral points are connected to the station ground grid.

2.4 Ground bus of ac distribution system switchgear, load centers and motor control centers (MCC) listed in Table 2.5.1-2—Class 1E Emergency Power Supply Electrical Equipment Design, is connected to the station ground grid.

08.03.01-17

2.5 Plant instrumentation grounding system is connected to the station grounding grid.

2.6 Insulation coordination is achieved on surge arrestors on MSUs, NATs, and EATs.

3.0 Inspection, Tests, Analyses and Acceptance Criteria

3.1 Table 2.5.8-1—Lightning Protection and Grounding System Inspections, Tests, Analyses, and Acceptance Criteria, provides the ITAAC for the lightning protection and grounding system.

08.03.01-17

Table 2.5.8-1—Lightning Protection and Grounding System Inspections, Tests, Analyses, and Acceptance Criteria

Commitment Wording		Inspection, Test or Analysis	Acceptance Criteria
2.1	~~Lightning protection is~~Surge arresters are provided for MSUs, NATs and EATs.	An inspection will be performed.	~~Lightning protection is~~ The surge arresters are provided for MSUs, NATs and EATs.
2.2	Main generator, EDG and SBODG neutrals are connected to the station ground grid.	An inspection will be performed.	The main generator, EDG and SBODG neutrals are connected to the station ground grid.
2.3	AC distribution system transformer neutral points are connected to the station ground grid.	An inspection will be performed.	The ac distribution system transformer neutral points are connected to the station ground grid.
2.4	The ground bus of ac distribution system switchgear, loads centers and MCCs listed in Table 2.5.1-2 is connected to the station ground grid.	An inspection will be performed.	The ground bus of the ac distribution system switchgear, load center and MCCs listed in Table 2.5.1-2 is connected to the station ground grid.
2.5	Plant instrumentation grounding system is connected to the station grounding grid.	An inspection will be performed.	The plant instrumentation grounding system is connected to the station grounding grid.

08.03.01-17

Table 2.5.8-1—Lightning Protection and Grounding System Inspections, Tests, Analyses, and Acceptance Criteria

Commitment Wording		Inspection, Test or Analysis	Acceptance Criteria
2.6	Insulation coordination is achieved on surge arrestors on MSUs, NATs, and EATs.	An analysis will be performed.	a) The lightning impulse protective ratio of the chopped wave withstand to the front-of-wave protection level is equal to or greater than 1.2. b) The lightning impulse protective ratio of the basic lightning impulse insulation level to the lightning impulse protective level is equal to or greater than 1.2. c) The switching impulse protective ratio of the basic switching impulse insulation level to the switching impulse protective level is equal to or greater than 1.15.

Next File

Table 2.5.2-3—Class 1E Uninterruptible Power Supply Inspections, Tests, Analyses, and Acceptance Criteria (4 Sheets)

Commitment Wording		Inspection, Test or Analysis	Acceptance Criteria
5.15	EUPS operating voltage remains within the terminal voltage range of the supplied safety-related equipment during the battery duty cycle.	An analysis will be performed.	EUPS operating voltage remains within the terminal voltage range of the supplied safety-related equipment during the battery duty cycle.
5.16	EUPS switchboards, MCCs, transformers and panelboards listed in Table 2.5.2-2 are rated to withstand fault currents for the time required to clear the fault from its power source.	An analysis will be performed.	The current capability of the EUPS switchboards, MCCs, transformers and panelboards listed in Table 2.5.2-2 are greater than the analyzed fault currents for the time required to clear the fault from its power source as determined by circuit interrupting device coordination analysis.
5.17	The feeder and load circuit breakers for EUPS switchboards, MCCs and panelboards are rated to interrupt fault currents.	An analysis will be performed.	The current interrupting capability of the feeder and load circuit breakers for the EUPS switchboards, MCCs and panelboards are greater than the analyzed fault currents.
5.18	EUPS interrupting devices (e.g., circuit breakers and fuses) are coordinated so that the circuit interrupting device closest to the fault is designed to open before other devices.	An analysis will be performed.	EUPS interrupting devices (e.g., circuit breakers and fuses) are coordinated so that the circuit interrupting device closest to the fault is designed to open before other devices.
5.19	Harmonic distortion does not prevent safety-related equipment from performing safety functions.	An analysis will be performed.	Analysis of the Class 1E buses concludes that total harmonic distortion does not exceed 5 percent voltage distortion on the Class 1E buses.

08.03.01-17

Next File

phase of the primary and secondary windings of the transformers. The surge arresters are connected as close as possible to the terminals of the equipment to be protected and have a path to the ground grid as short and direct as practicable. The ground conductor from the surge arrester to the ground grid is one continuous run without splices. Each surge arrester has its own ground conductor for bonding to the ground grid. Surge arresters for lightning and surge protection are shown on Figure 8.3-2 and Figure 8.3-3.

Insulation coordination is performed in accordance with the procedures described IEEE Std 1313.1-1996 (Reference 33) and IEEE Std 1313.2-1999 (Reference 34). Surge arrester selection is determined so that protection of major equipment, such as MSU, EATs and NATs is provided while giving maximum protection to the insulation of other equipment. The insulation coordination is determined from the known characteristics of voltage surges and the characteristics of the specific surge arresters used. From these characteristics, the proper insulation level of distribution system components and arrangement of protection components are selected to provide an insulation structure that will withstand voltage stresses to which the system and equipment could be subjected.

08.03.01-17

Insulation coordination is defined as the selection of insulation strength consistent with expected overvoltages to obtain an acceptable risk of failure. The degree of coordination is measured by the protective ratio, which is the ratio of the insulation withstand level to the voltage at the protected equipment. Three protective ratios are analyzed, comparing protective levels with corresponding insulation withstands.

$$PR_{L1} = \frac{CWW}{FOW}$$

$$PR_{L2} = \frac{BIL}{LPL}$$

$$PR_{S} = \frac{BSL}{SPL}$$

Where:

PR_{L1}	Lightning impulse protective ratio
PR_{L2}	Lightning impulse protective ratio
PR_{S}	Switching impulse protective ratio
CWW	Chopped wave withstand
FOW	Front-of-wave protection level
BIL	Basic lightning impulse insulation level
LPL	Lightning impulse protective level

08.03.01-17

BSL	Basic switching impulse insulation level
SPL	Switching impulse protective level

Acceptable coordination is achieved if PR_{L1} and PR_{L2} are equal to or greater than 1.2, and PR_S is equal to or greater than 1.15. An analysis is performed to verify acceptable insulation coordination on surge arresters installed on the as-built MSUs, EATs, and NATs.

8.3.1.3.6 Power Quality Limits

Electrical distribution systems have been designed to provide power to the connected loads such that the effects of total harmonic distortion (THD) in the Class 1E power systems do not degrade safety-related system performance. Equipment that is susceptible to degradation due to THD includes motors, transformers and switchgear due to a combination of copper and stray flux loses, and iron losses which can increase component heating, thereby shortening the life of some insulating components and reducing the steady-state current carrying capacity. Equipment connected to the distribution system that can contribute to THD includes battery chargers and inverters, which have been designed and selected to minimize the harmonics they inject into the distribution system buses. The U.S. EPR does not use variable speed drives, which are major THD contributors. THD is maintained within the acceptance criteria of IEEE 519-1992 (Reference 35).

08.03.01-17

Medium voltage motor protection is described in Section 8.3.1.1.3. EDG protection is described in Section 8.3.1.1.5. Main generator protection is described in Section 8.3.1.1. Protective device application is consistent with the power quality required for the device to operate. An analysis will be performed to verify the THD present on the Class 1E buses is less than or equal to 5 percent.

8.3.1.3.7 Monitoring and Testing

The MCR and RSS monitoring of distribution system components as described in Section 8.3.1.1.4 is provided by the safety information and control system (SICS) and the process information and control system (PICS). SICS provides safety-related control and monitoring capability in the event that the PICS is not available. PICS is a non-safety-related human machine interface that provides monitoring and control of plant systems during plant operations, including accident conditions. The functional capabilities of SICS and PICS are described in Section 7.1.1.3. Where monitoring of component critical characteristics such as inverter output frequency and voltage is not provided in the MCR or RSS, alarms alert operators of out-of-tolerance equipment characteristics.

When maintenance testing of the EPSS switchgear and load center components does not interfere with plant operation, circuit breakers can be racked out to a test position.

Figure 8.3-2—Emergency Power S
Sheet

08.03.01-17

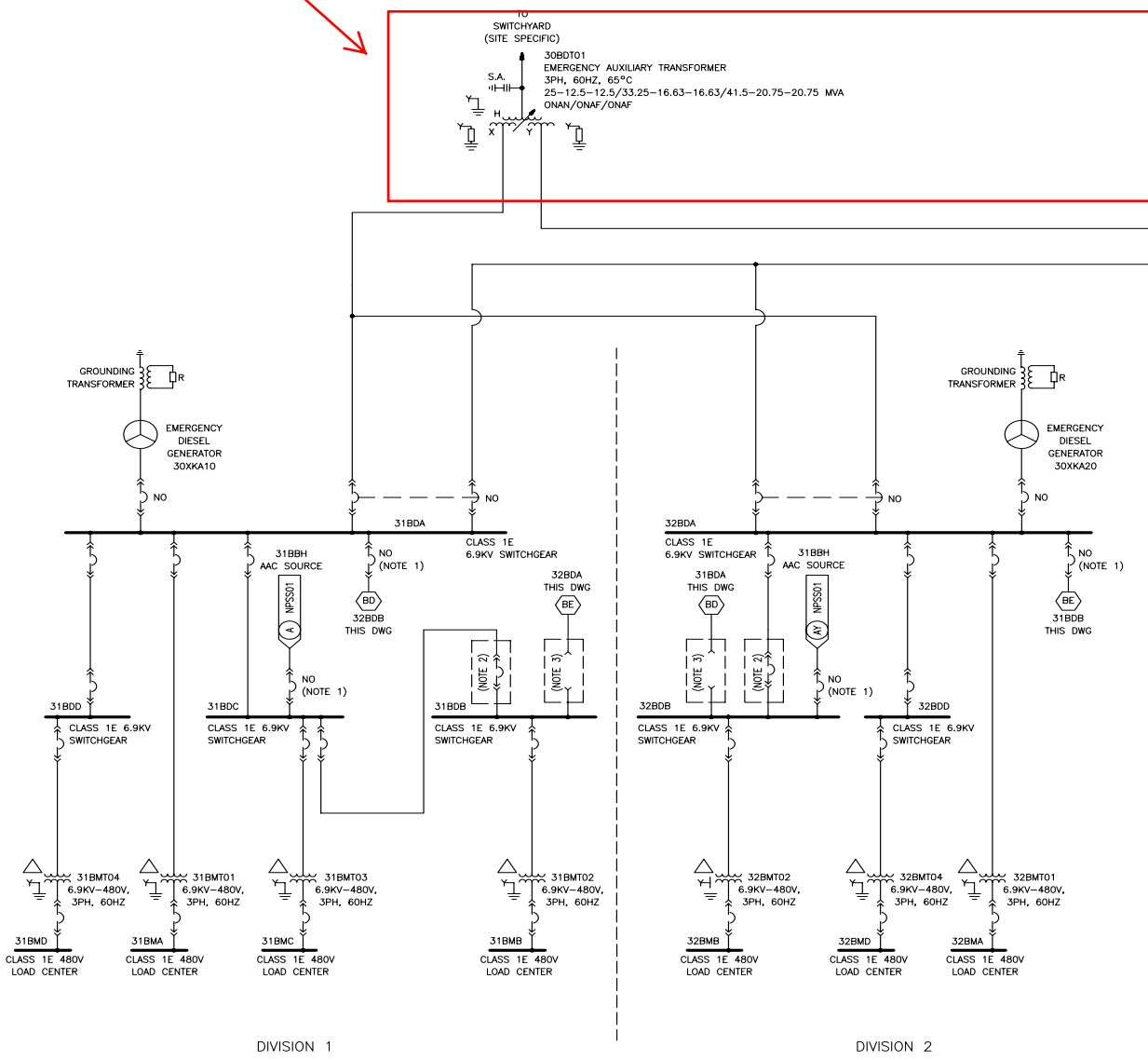

Figure 8.3-3—Normal Power Sup
Sheet

08.03.01-17

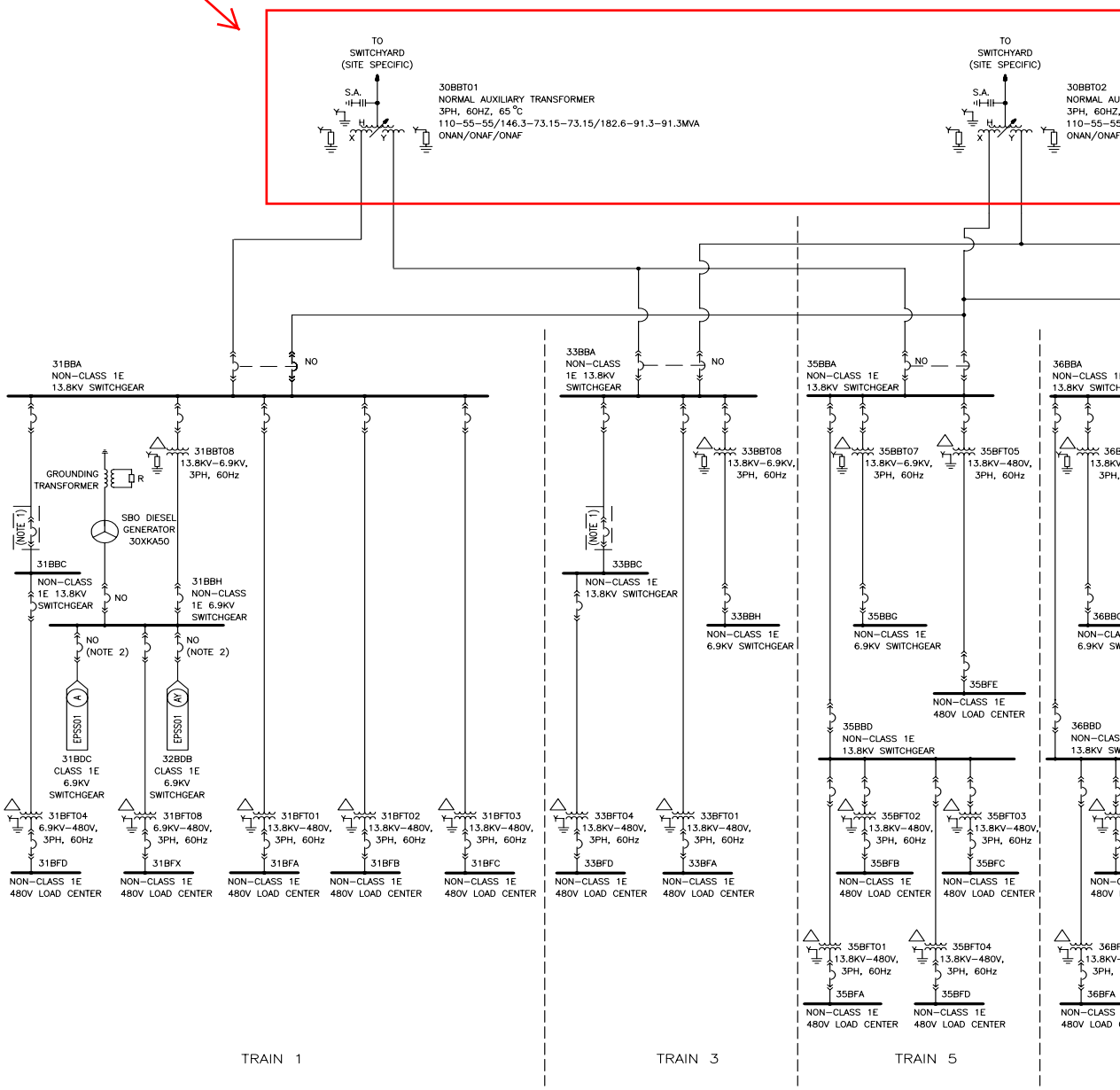

SBO Timeline

1. Prior to the event, consistent with technical specifications, unidentified leakage is one gpm or less, and identified leakage is ten gpm~~gallons per minute~~ or less.

08.04-7

2. At the beginning of the event, the reactor coolant pumps (RCP) decrease in speed, leading to a reactor and main turbine trip. All feedwater is lost. The SG pressures are controlled at 1370 psig by steaming all SGs with their associated main steam relief train (MSRT). The pressurizer safety valves do not open. Letdown flow is terminated automatically at onset of SBO.

3. Two minutes into the event, all RCP seals are assumed to fail. This is due to the loss of RCP seal injection and the loss of thermal barrier cooling. The RCP seal design specifications limit the seal leakage after a seal failure to 25 gpm per seal or 100 gpm total. Total RCS leakage rises to 111 gpm or less.

4. Ten minutes or less into the event, the SBODGs are available for manual loading of safe shutdown equipment. ~~Operator actions are begun to limit reactor coolant inventory losses through letdown, sampling and pressurizer degasification connections.~~ EUPS two-hour batteries and battery chargers are loaded onto the SBODGs. Thus, their supplied loads are available during the entire SBO period. The HVAC equipment in divisions 1 and 4 can be restored. Some Safeguard~~s~~ Building areas may briefly exceed 122°F before HVAC is restored.

5. Fifteen minutes into the event, the standstill seal system terminates RCP seal leakage. Standstill seal system leakage is 0.5 gpm per standstill seal. Total RCS leakage drops to 13 gpm or less; this leakage continues for the duration of the event.

~~6. Twenty minutes into the event, the associated EUPS two-hour batteries and battery chargers are loaded onto the SBODGs. Thus, their supplied loads are available during the entire SBO period.~~

08.04-7

6. Thirty minutes into the event, two EFW pumps are started and begin feeding four SGs. The SG levels in the fed SGs recover from their low of 40 percent ~~(~~wide range (WR)~~)~~ to the normal post trip value of 82.2 percent ~~(~~WR~~)~~. ~~All EFW pools are cross-connected during normal operations, and remain cross-connected through the SBO.~~

7. After eight hours, the SGs are maintained at their normal post-trip level, pressurizer level is on scale, and core exit temperature is 602°F and decreasing slowly. Ambient air temperatures in the division 2 and division 3 equipment areas are within limits.

8.4.2.6.3 RG 1.155 C.3.3 – Modifications to Cope with Station Blackout – AAC Power Sources

Consistent with SECY-90-016 (Reference 6), "Evolutionary Light Water Reactor (LWR) Certification Issues and Their Relationship to Current Regulatory Requirements," ~~January 12, 1990,~~ the U.S. EPR design provides two full capacity AAC