HITACHI

GE Hitachi Nuclear Energy

Richard E. Kingston
Vice President, ESBWR Licensing

P.O. Box 780
3901 Castle Hayne Road, M/C A-55
Wilmington, NC 28402 USA

T 910.819.6192
F 910.362.6192
rick.kingston@ge.com

MFN 06-407
Supplement 11

Docket No. 52-010

December 12, 2008

U.S. Nuclear Regulatory Commission
Document Control Desk
Washington, D.C. 20555-0001

Subject: **Response to Portion of NRC RAI Letter No. 166 Related to ESBWR Design Certification Application - DCD Tier 2 Section 3.8 – Seismic Category I Structures; RAI Number 3.8-96, Supplement 3**

The purpose of this letter is to submit the GE Hitachi Nuclear Energy (GEH) response to the U.S. Nuclear Regulatory Commission (NRC) Request for Additional Information (RAI) sent by NRC letter dated March 28, 2008 (Reference 1). Previous NRC requests and GEH responses were transmitted via references 2 through 5. RAI Number 3.8-94 Supplement 3 is addressed in Enclosure 1.

If you have any questions or require additional information, please contact me.

Sincerely,

Richard E. Kingston

Richard E. Kingston
Vice President, ESBWR Licensing

D068
NRO

References:

1. MFN 08-316 Letter from U.S. Nuclear Regulatory Commission to Robert E. Brown, GEH, *Request For Additional Information Letter No. 166 Related to ESBWR Design Certification Application*, dated March 28, 2008

2. MFN 06-407, Supplement 3, Letter from James C. Kinsey to U.S. Nuclear Regulatory Commission, *Response to Portion of NRC Request for Additional Information Letter No. 38 Related to ESBWR Design Certification Application – DCD Tier 2 Section 3.8 – Seismic Category I Structures - RAI Numbers 3.8-28 S02, 3.8-76 S02, 3.8-93 S02, 3.8-94 S02, 3.8-96 S02, 3.8-101 S02, 3.8-102 S02 and 3.8-103 S02*, dated November 28, 2007

3. MFN 06-407, Supplement 2, Letter from James C. Kinsey to U.S. Nuclear Regulatory Commission, *Response to Portion of NRC Request for Additional Information Letter No. 38 Related to ESBWR Design Certification Application –Structural Analysis – RAI Numbers 3.8-81 S01, 3.8-85 S01, 3.8-86 S01, 3.8-88 S01, 3.8-92 S01, 3.8-92 S01, 3.8-93 S01, 3.8-94 S01, 3.8-96 S01 and 3.8-99 S01*, dated March 26, 2007.

4. MFN 06-407, Letter from David H. Hinds to U.S. Nuclear Regulatory Commission, Response to Portion of NRC Request for Additional Information Letter No. 38 Related to ESBWR Design Certification Application –Structural Analysis – RAI Numbers 3.8-17, 3.8-24, 3.8-28, 3.8-32, 3.8-33 through 3.8-38, 3.8-44, 3.8-59, 3.8-62, 3.8-65, 3.8-69, 3.8-73, 3.8-76, 3.8-77, 3.8-79, 3.8-80, 3.8-81, 3.8-84, 3.8-85, 3.8-86, 3.8-88, 3.8-89, 3.8-92, 3.8-93 through 3.8-97, 3.8-99, 3.8-101, 3.8-102 and 3.8-103, dated November 8, 2006.

5. MFN 06-197 Letter from U.S. Nuclear Regulatory Commission to David H. Hinds, General Electric Company, *Request For Additional Information Letter No. 38 Related to ESBWR Design Certification Application*, dated July 7, 2006

Enclosure:

1. Response to Portion of NRC RAI Letter No. 166 Related to ESBWR Design Certification Application - DCD Tier 2 Section 3.8 – Seismic Category I Structures; RAI Number 3.8-96 S03

Attachments:

1. Attachment 3.8-96, Supplement 3(X), "Crystalline Waterproofing Material, Technical Data"
2. Attachment 3.8-96, Supplement 3(Y), "Crystalline Waterproofing Material, Product Data Sheets"
3. Attachment 3.8-96, Supplement 3(Z), "Crystalline Waterproofing Material, Specifications"

cc:	AE Cubbage	USNRC (with enclosures)
	RE Brown	GEH/Wilmington (with enclosures)
	DH Hinds	GEH/Wilmington (with enclosures)
	eDRF	0000-0092-2854 (RAI 3.8-96 S03)

ENCLOSURE 1

MFN 06-407, Supplement 11

Response to Portion of NRC RAI Letter Nos. 166
Related to ESBWR Design Certification Application

DCD Tier 2 Section 3.8 – Seismic Category I Structures

RAI Number 3.8-96 S03

For historical purposes, the text and GEH response of RAI 3.8-96 and supplements 1 and 2 are included. The attachments (if any) are not included from the previous responses to avoid confusion.

NRC RAI 3.8-96

DCD Section 3.8.5.5 presents two specifications of appropriate safety factors (SF) for foundation design. The SF against sliding indicates that sliding resistance is judged as the sum of both shear friction along the basemat and passive pressures induced due to embedment effects. However, the DCD does not indicate (1) how these effects are to consider consistent lateral displacement criteria (that is, the displacement effect on passive pressure is not the same as on friction development) and (2) how the effect of waterproofing is to impact the development of basemat friction capacity. DCD Section 3.8.5.5 needs to clearly indicate how these effects are incorporated into the standard plant design for the considered range of acceptable site conditions considered.

Include this information in DCD Section 3.8.5.5. In addition, (1) identify the applicable detailed report/calculation (number, title, revision and date, and brief description of content) that will be available for audit by the staff, and (2) reference this report/calculation in the DCD.

GE Response

a) As stated in the response to NRC RAI 3.7-35, SASSI analyses were performed to address the embedment effect. It was confirmed that the base shears calculated by the SASSI analyses, which consider the embedment effect, are less than those obtained by design seismic analyses that neglect the embedment effect. The use of higher base shears calculated without the beneficial effect of embedment is deemed conservative for the sliding evaluation without explicit consideration of consistent lateral displacement criteria for passive pressure and friction resistance.

b) Please see NRC RAI 3.8-89 for the response to impact of waterproofing.

(1) The applicable detailed reports/calculations that will be available for the NRC audit are:

26A6652, *RB FB Stability Analysis Report, Revision 2*, April 2006, which contains the stability calculations of the Reactor Building/Fuel Building.

26A6654, *CB Stability Analysis Report, Revision 2*, April 2006, which contains the stability calculations of the Control Building.

(2) Since this information exists as part of GE's internal tracking system, it is not necessary to add it to the DCD.

No DCD change will be made in response to this RAI.

NRC RAI 3.8-96, Supplement 1

NRC Assessment Following the December 14, 2006 Audit

GE needs to clarify the response to this RAI and revise Section 3.8.5.5 to be consistent with their response. Does GE calculate the SF against sliding by only considering the basemat shear friction? If not, GE needs to better explain the method used in the light of the question asked. GE also needs to explain (1) Do the exterior walls need to be designed for passive pressures as implied in the last sentence of item (a) of the response? (2) Are both base shear and passive pressures being relied upon for lateral restraint? (3) the friction coefficient used in the analysis and its technical bases, (4) how lift-off effects are captured in the sliding analysis, (5) the capacity of the mud mat to resist applied loads, and (6) what effect the use of chemical crystalline powder in the mud mat has on the assumed structural properties. Potential leaching of the mud mat due to groundwater is being reviewed under RAI 3.8-81.

During the audit, GE indicated the following:

(1) & (2) GE explained the answer to both is yes. The seismic stick model did not consider embedment effects while the stability calculations (soil sliding), using this shear force, did consider soil friction and soil passive pressure. However, the SASSI did consider soil embedment and it was shown that the resulting shear loads are smaller than those calculated by the seismic stick model. GE indicated that they will determine an appropriate method to consider the seismic shear force from the seismic stick model and/or SASSI analysis in their calculation of sliding stability calculation. The method used will ensure consistency of the deformation in developing the frictional soil resistance and soil passive pressure. Also, the design of the foundation walls will consider the appropriate pressures from the SASSI analysis and passive soil pressures used in the sliding stability calculations.

(3) GE will provide the reference for the static and dynamic coefficient of friction values. This would be needed if GE is not able to show that the soil frictional resistance alone can resist the seismic shear force.

(4) GE will provide additional justification to demonstrate that the effects of uplift are not significant.

(5) GE will expand on the description of the mud mat and provide the minimum applicable requirements (e.g., ACI Code).

(6) GE explained that this material has no deleterious effect on the concrete and has been used and approved at other NPPs.

GE Response

(1) & (2) Table 3.8-96(1) summarizes the evaluation results of the foundation sliding analyses for generic site conditions.

The seismic loads used in the evaluation are obtained by seismic response analysis using the lumped soil spring stick model (DAC3N analyses). Since the lumped soil spring model does not consider embedment effects, the resulting shear loads are larger than those calculated by SASSI analyses. The use of higher base shear is conservative for the foundation stability evaluation.

Sliding resistance is composed of the following:

- Friction force at the basemat bottom surface
- Cohesion force at the basemat bottom surface
- Passive soil pressure at the basemat side surface
  For the RB/FB and CB, the gap between the building and excavated soil is filled with concrete up to the top level of the basemat or higher. Since the basemat is constrained by rigid concrete backfill, the passive soil pressure is mobilized for the region.
- Passive soil pressure on walls
  The passive soil pressures considered are the envelope lateral soil pressures obtained from the elastic solution based on ASCE 4-98, Section 3.5.3.2 and SASSI analysis results, which are used in the wall design.

(3) Only the static coefficient of friction is used for stability evaluation. Coefficient of friction, μ, is calculated by the following equation.

$$\mu = \min(\tan\phi, 0.75)$$

where,

ϕ = Angle of internal friction (30° for soft and medium soil, 40° for hard soil).

The minimum angle of internal friction will be specified to be 30° in DCD Tier 2 Table 2.0-1 as a site requirement.

(4) Sliding resistance is composed of passive soil pressure, friction and cohesion forces at the basemat bottom. Uplift of the basemat has no effect on the passive soil pressure. The friction force at the basemat bottom is also not influenced by the uplift, because the friction force is calculated by (normal compressive force) x (friction coefficient). Because the basemat uplift has no effect on both the normal compressive force and friction coefficient, the resulting friction force is unchanged even if uplift occurs. As for the cohesion force, since it is calculated by (cohesion stress) x (contact area of basemat), the value is reduced if the basemat is uplifted. However, the contribution of the cohesion force to the total resistance is relatively small as shown in Table 3.8-96(1). The reduction of the cohesion force due to uplift has little impact on the total resistance.

(5) The mud mat construction is performed in accordance with the same standards and requirements as the basemat to avoid possibility of errors in the field.

(6) The crystalline powder used is the same material approved for use in AP-1000 and has no deleterious effect on concrete. It forms a substantial waterproofing barrier to prevent water infiltration or ex-filtration.

Table 3.8-96(1) Sliding Evaluation Results

(i) RBFB

Building width X	70.0 m					
Building width Y	49.0 m					
Total Weight	2360 MN					
Buoyancy	652 MN					
Soil Condition	Soft		Medium		Hard	
Vertical Seismic Load	676 MN		1159 MN		1103 MN	
Minimum Vertical Load	1438 MN		1244 MN		1267 MN	
	NS dir	EW dir	NS dir	EW dir	NS dir	EW dir
Fv: Horizontal Seismic Force (MN)	*899*	*787*	*1462*	*1619*	*1486*	*1243*
Fub: Bottom Friction Force (MN)	830	830	718	718	950	950
Fc: Effective Cohesion Force (MN)	0	0	343	343	1166	1166
Fpb: Passive Pressure for Basemat (MN)	132	188	213	304	539	769
Fdsf: Passive Soil Pressure on Wall (MN)	440	644	440	644	440	644
Fr: Sliding Resistance (=Fub+Fc+Fpb+Fdsf)	*1402*	*1663*	*1714*	*2010*	*3095*	*3530*
FS (=Fr/Fv)	**1.56**	**2.11**	**1.17**	**1.24**	**2.08**	**2.84**

(ii) CB

Building width X	30.3 m					
Building width Y	23.8 m					
Total Weight	173 MN					
Buoyancy	101 MN					
Soil Condition	Soft		Medium		Hard	
Vertical Seismic Load	72 MN		79 MN		100 MN	
Minimum Vertical Load	43 MN		40 MN		32 MN	
	NS dir	EW dir	NS dir	EW dir	NS dir	EW dir
Fv: Horizontal Seismic Force (MN)	*105*	*100*	*97*	*94*	*101*	*91*
Fub: Bottom Friction Force (MN)	25	25	23	23	24	24
Fc: Effective Cohesion Force (MN)	0	0	72	72	245	245
Fpb: Passive Pressure for Basemat (MN)	36	46	64	82	173	220
Fds: Passive Soil Pressure on Wall (MN)	58	74	58	74	58	74
Fr: Sliding Resistance (=Fub+Fc+Fpb+Fds)	*119*	*145*	*218*	*251*	*500*	*563*
FS (=Fr/Fv)	**1.13**	**1.44**	**2.23**	**2.67**	**4.94**	**6.22**

Note:

1. Minimum vertical load: Wm = Wt – Fb – 0.4Fa
   where,
   Fb: Buoyancy due to groundwater
   Fa: Vertical seismic force
2. Bottom friction force: Fub = Wm* μ
   where,
   μ: friction coefficient
3. Fv and Fa are obtained by seismic lumped soil spring stick model analyses (DAC3N analyses)

DCD Tier 2 Table 2.0-1, Subsections 3G.1.5.5 and 3G.2.5.5 and Tables 3G.1-57 and 3G.2-26 have been revised. DCD Tier 2 Figures 3G.1-65 and 3G.2-15 have been added. The pages (pp. 2.0-3, 3G-16, 3G-123, 3G-189, 3G-194, 3G-215 & 3G-230) revised in DCD Tier 2 Revision 3 for this response are attached.

DCD Impact

As stated above.

NRC RAI 3.8-96, Supplement 2

NRC Assessment from Chandu Patel E-mail Dated May 24, 2007

The applicant has not used a consistent set of criteria to determine the safety factor against sliding and also needs to provide the technical bases for some of the parameters used in the analysis results that are presented. The staff requests the applicant to address the following:

(1) The fourth bullet in the list of items that comprise the sliding resistance is identified as "passive soil pressure on walls." This terminology is misleading since the information included under this item is the elastic lateral soil pressure. If passive soil pressures are being credited to provide sliding resistance, explain how these pressures are calculated and confirm that the walls are designed to resist these forces. If elastic lateral soil pressures on the walls are being credited to provide sliding resistance, it is not consistent to use these elastic soil pressures with the passive soil pressures at the basemat side surface. Also, explain how the passive soil pressures are calculated for the basemat side surface.

(2) Passive soil pressure at the basemat side surface is being credited to provide sliding resistance, which means that the static friction resistance at the bottom of the basemat is overcome. Therefore, explain why a dynamic coefficient of friction is not used to calculate the friction force at the basemat bottom surface.

(3) How has GE determined that there are sufficient soil sites that would have an angle of internal friction of 30 degrees or greater? What would a COL applicant be required to do if a site has a soil friction angle of less than 30 degrees?

(4) Provide a description of the formulations used to calculate the cohesion resisting forces and discuss how the material properties were determined for the analysis.

(5) Provide the technical basis for assuming that medium soils with an angle of internal friction of 30 degrees would also have the effective cohesion resisting forces reported in the analysis results in Table 3.8-96(1). Why is the cohesion value in Table 3.8-96(1) equal to zero for soft soils?

(6) Provide the technical basis for assuming that the hard soil/rock conditions have the effective cohesion resisting forces reported in the analysis results in Table 3.8-96(1).

(7) Why does the response indicate that the cohesion force contribution to total force is small when Table 3.8-96(1) shows that it is quite large for hard soils? For the RBFB medium soil condition, a small change in the cohesion force could result in a factor of safety of less than 1.1. In the light of these observations, further justification is needed to support the statement that the reduction of the cohesion due to uplift has little impact on the total resistance.
(8) Describe the COL requirements for the backfill material for the gap shown in Figures 3G.1-65 and 3G.2-15. Will the backfill material be required to have a stiffness defined by its shear wave velocity which is at least equal to the shear wave velocity of the surrounding insitu soil? If

not, explain why not. Also, clarify that the backfill material will completely fill the gap above the concrete backfill to the grade level.

(9) The note in Table 3.8-96(1) implies that the 100-40-40 three directional combination method was used for the sliding evaluation. The data in the tables above the note, however indicate that a two dimensional (one horizontal and one vertical) check was made for calculating the factor of safety. In this evaluation the bottom friction force is derived based on the total vertical load consisting of dead weight minus the buoyancy effect minus 0.40 times the vertical seismic force. Since a simplified two dimensional approach (i.e., N-S & Vertical and then E-W & Vertical) is being used to demonstrate the factors of safety against sliding and overturning, the 100-40-40 rule is not considered to be appropriate. The typical approach that is utilized for checking sliding and overturning in accordance with the SRP 3.8.5 requirements is to use the dead load minus the buoyancy effect and then subtract the full vertical seismic load for the N-S & Vertical check and the E-W & Vertical check. If any other method is utilized, then GE needs to provide the technical justification for the approach. Note that 90% of the dead load (including the buoyancy effect) should be utilized as specified in Note 1 of DCD Table 3.8-15, which is also in accordance with ACI 349 requirements.

GEH Response

(1) In the calculations shown in Table 3.8-96(1), elastic lateral soil pressures on the walls were credited to provide sliding resistance. This is conservative for sliding evaluation since actual passive pressures, if mobilized, would be higher. Wall design is based on elastic lateral soil pressures. As discussed in the response to Item (4), the required factor of safety can be satisfied without considering the sliding resistance from the elastic lateral soil pressures. Passive pressure is mobilized on the side surface of the basemat since the basemat is constrained by rigid concrete backfill. The passive pressure at the basemat side is calculated using the following equations:

$$P_p = k_p \gamma' H + \gamma_w H_w + k_p q + 2C\sqrt{k_p}$$

$$k_p = \frac{1+\sin\phi}{1-\sin\phi}$$

where,

k_p = Passive pressure coefficient
H = Height of soil column
H_w = Height of water column
γ' = Effective weight of soil. Use buoyant unit weight below water table and moist unit weight above water table.
γ_w = Unit weight of water
q = Magnitude of surcharge load per unit area
ϕ = Angle of internal friction of soil
C = Cohesion

The stress in the basemat generated by passive soil pressures is 2.45 MPa for the Hard site condition and is less than 10% of the concrete compressive strength. The stress is acceptable for the basemat design.

(2) The shear strength of soil, i.e., the resistance at the basemat bottom, is composed of friction and cohesion. It is generally recognized that the strength of soil for dynamic loads is larger than that for static loads. Therefore, calculations using static coefficient of friction, i.e., calculations based on the static strengths, are conservative.

(3) Table 2-6 from Reference 1 shows that a 30° angle of internal friction is a reasonable lower bound for competent soil material. A site-specific sliding evaluation would be performed if the angle of friction of the site-specific foundation material is lower than 30°. In DCD Tier 2 Subsection 2.0-1-A, the COL applicant referencing the ESBWR DCD is required to demonstrate that the site characteristics, which includes angle of internal friction, of a given site fall within ESBWR DCD design parameter values shown in DCD Tier 2 Table 2.0-1.

TABLE 2-6 Representative values for angle of internal friction ϕ

	Type of test*		
Soil	Unconsolidated-undrained U	Consolidated-undrained CU	Consolidated-drained CD
Gravel			
Medium size	40–55°		40–55°
Sandy	35–50°		35–50°
Sand			
Loose dry	28–34°		
Loose saturated	28–34°		
Dense dry	35–46°		43–50°
Dense saturated	1–2° less than dense dry		43–50°
Silt or silty sand			
Loose	20–22°		27–30°
Dense	25–30°		30–35°
Clay	0° if saturated	3–20°	20–42°

* See a laboratory manual on soil testing for a complete description of these tests, e.g., Bowles (1986*b*).

Notes:

1. Use larger values as γ increases
2. Use larger values for more angular particles
3. Use larger values for well-graded sand and gravel mixtures (GGW, SW)
4. Average values for
   Gravels: 35–38°
   Sands: 32–34°

(4) In Reference 1 it is stated that the ultimate bearing capacity, q_u, can be nine times cohesion, c. In the same reference, it is suggested to use 0.5 to 0.7 of c for sliding stability evaluations. That is, the cohesion used for sliding evaluations, c', can be evaluated by the following equation as a function of the ultimate bearing capacity:

$$c' = 0.5 \times q_u / 9 = q_u / 18$$

The expected ultimate bearing capacities of the ESBWR design need to be larger than the maximum soil bearing stresses summarized in the DCD Tier 2 Table 3G.1-58 for the RBFB and Table 3G.2-27 for the CB, respectively. These are the demand pressures.

Assuming the demand pressures are the actual ultimate bearing capacities, the associated cohesions can be conservatively evaluated by substituting the maximum soil bearing stresses into q_u in the above equation. The resulting cohesions are summarized in Table 3.8-96(2). The sliding stability evaluations were updated using these cohesions. The results are shown in Table 3.8-96(3). The calculated factors of safety (FS) satisfy the allowable value of 1.1. In DCD Tier 2 Revision 4, Tables 3G.1-57 and 3G.2-26 were revised in accordance with the results in Table 3.8-96(3). The revised pages 3G-123 and 3G-228 in DCD Tier 2 Revision 4 are attached.

In the calculations in Table 3.8-96(3), the elastic lateral soil pressures on the walls discussed in Item (1) above are conservatively neglected. The passive pressure utilized is only at the basemat side as described Item (1) above.

(5) See response to Item (4) where cohesion is taken to be a function of the ultimate bearing capacity.

(6) See response to Item (4) where cohesion is taken to be a function of the ultimate bearing capacity.

(7) According to the basemat uplift analysis results, which are shown in the DCD Tier 2 Figures 3G.1-60 and 3G.1-61, the ratios of contact area of the basemat are about 80% and 85% for N-S and E-W directions, respectively. Since the cohesion is effective at the contact area only, it is reduced in proportion to the ratio of contact area. The FS listed in Table 3.8-96(3) have sufficient margins for the reduced contact area of 80%.

(8) The shear wave velocity of the backfill material is not required to be at least equal to that of the surrounding in situ soil. This is because lateral soil/backfill was neglected in the design basis seismic analysis using the lumped-mass soil spring approach (DCD Tier 2 Subsection 3A.5.1). This approach was confirmed to be conservative as compared to the results of the SASSI analysis taking into account embedment (DCD Tier 2 Subsection 3A.8.7). The gap is completely filled with compacted engineered backfill material. This statement is included in notes to DCD Tier 2 Revision 4 Figures 3G.1-65 and 3G.2-17. The revised pages 3G-189 and 3G-245 in DCD Tier 2 Revision 4 are attached.

(9) Alternate sliding stability is performed for the three dimensional seismic loads in accordance with the 100-40-40 rule.

Applied horizontal seismic forces and sliding resistances are schematically shown in Figure 3.8-96(1). Among the resistances, the basemat bottom friction and cohesion act in the direction of the resultant seismic force and their magnitudes are the same as those in the 2-dimensional evaluation.

Resistances due to the passive soil pressures applied to the basemat side surfaces are evaluated as follows:

Soil pressures are applied perpendicular to the basemat. The component in the direction of the seismic force is calculated by the following equation:

$$F = F_x \cos\theta + F_y \sin\theta \quad \text{(1)}$$

From the equilibrium of forces in the direction perpendicular to the seismic forces, the following equation needs to be satisfied:

$$F_x \sin\theta = F_y \cos\theta \quad \text{(2)}$$

By substituting Eq. (2) into Eq. (1), the following equations are obtained:

$$F_1 = \left(\cos\theta + \frac{\sin^2\theta}{\cos\theta}\right)F_x = \left(\cos\theta + \frac{1-\cos^2\theta}{\cos\theta}\right)F_x = \frac{F_x}{\cos\theta} \quad \text{(3a)}$$

or

$$F_2 = \left(\sin\theta + \frac{\cos^2\theta}{\sin\theta}\right)F_y = \left(\sin\theta + \frac{1-\sin^2\theta}{\sin\theta}\right)F_y = \frac{F_y}{\sin\theta} \quad \text{(3b)}$$

F_1 and F_2 reach their maximum values when F_x and F_y are equal to the resultant forces due to passive soil pressures. As a result, the resistance due to passive soil pressures is obtained by the following equations:

$$\begin{aligned} F_{pb1} &= F_{pbx}/\cos\theta \\ F_{pb2} &= F_{pby}/\sin\theta \\ F_{pbm} &= \min(F_{pb1}, F_{pb2}) \end{aligned} \quad \text{(4)}$$

where,

F_{pbx}, F_{pby} : Forces due to passive soil pressures in X and Y directions, respectively

The evaluation results are shown in Tables 3.8-96(4) and 3.8-96(5). The calculated factors of safety are similar to those in Table 3.8-96(3) for the two-dimensional approach using 40% of vertical seismic forces. Therefore, the use of 0.4 vertical seismic component in the two dimensional approach (i.e., N-S & Vertical and then E-W & Vertical) is justified for design evaluation.

As for dead load consideration, SRP 3.8.5 has no requirements for dead load reduction in sliding evaluation. The uncertainties in dead load are implicitly accounted for in the required minimum factor of safety. The 90% reduction specified in Note 1 of DCD Tier 2 Table 3.8-15 and ACI 349 is for design of structural members only and therefore it does not apply to the foundation sliding evaluation. However, the 90% reduction is conservatively considered in the calculations shown in Table 3.8-96(3) and in Tables 3.8-96(4) and 3.8-96(5).

Reference:

1. Bowles, Joseph E. Foundation Analysis and Design. 4th Edition. New York: McGraw-Hill, 1988.

Table 3.8-96(2) Cohesions Based on Maximum Soil Bearing Pressure

Building	RBFB			CB		
Soil Condition	Soft	Medium	Hard	Soft	Medium	Hard
Max. Soil Bearing Stress (MPa)	2.7	7.3	5.4	2.8	2.5	2.4
Cohesion coefficient (MPa)	0.15	0.41	0.30	0.16	0.14	0.13

Table 3.8-96(3) Updated Sliding Stability Evaluation Results

<RB>

Building width X	70.0 m					
Building width Y	49.0 m					
Total Weight	2360 MN					
Buoyancy	652 MN					
Soil Condition	Soft		Medium		Hard	
Vertical Seismic Load	676 MN		1159 MN		1103 MN	
Minimum Vertical Load	1202 MN		1008 MN		1031 MN	
	NS dir	EW dir	NS dir	EW dir	NS dir	EW dir
Fv: Horizontal Seismic Force (MN)	*899*	*787*	*1462*	*1619*	*1485*	*1243*
Fub: Bottom Friction Force (MN)	694	694	582	582	773	773
Fc: Effective Cohesion Force (MN)	514	514	1391	1391	1029	1029
Fpb: Passive Pressure for Basemat (MN)	132	188	213	304	539	769
Fdsf: Passive Soil Pressure on Wall (MN)	0	0	0	0	0	0
Fr: Sliding Resistance (=Fub+Fc+Fpb+Fdsf)	*1340*	*1397*	*2186*	*2277*	*2341*	*2572*
FS (=Fr/Fv)	**1.49**	**1.78**	**1.50**	**1.41**	**1.58**	**2.07**

<CB>

Building width X	30.3 m					
Building width Y	23.8 m					
Total Weight	173 MN					
Buoyancy	101 MN					
Soil Condition	Soft		Medium		Hard	
Vertical Seismic Load	91 MN		83 MN		90 MN	
Minimum Vertical Load	18 MN		22 MN		19 MN	
	NS dir	EW dir	NS dir	EW dir	NS dir	EW dir
Fv: Horizontal Seismic Force (MN)	*124*	*124*	*109*	*118*	*115*	*122*
Fub: Bottom Friction Force (MN)	11	11	12	12	14	14
Fc: Effective Cohesion Force (MN)	112	112	100	100	96	96
Fpb: Passive Pressure for Basemat (MN)	36	46	64	82	173	220
Fdsf: Passive Soil Pressure on Wall (MN)	0	0	0	0	0	0
Fr: Sliding Resistance (=Fub+Fc+Fpb+Fds)	*159*	*169*	*177*	*195*	*283*	*331*
FS (=Fr/Fv)	**1.28**	**1.36**	**1.63**	**1.64**	**2.46**	**2.71**

Table 3.8-96(4) Sliding Evaluation Results for 3-dimensional Inputs: RBFB

Building width X	70.0 m					
Building width Y	49.0 m					
Total Weight	2360 MN					
Buoyancy	652 MN					
Soil Condition	Soft		Medium		Hard	
Vertical Seismic Load	676 MN		1159 MN		1103 MN	
Minimum Vertical Load	1202 MN		1008 MN		1031 MN	
	NS dir	EW dir	NS dir	EW dir	NS dir	EW dir
<3-dimenaional Evaluation> 1.0*NS+0.4*EW+0.4*V						
Factored Horizontal Seismic Force (MN)	*899*	*315*	*1462*	*648*	*1485*	*497*
Fvr: Resultant Seismic Force (MN)	*953*		*1599*		*1566*	
Fub: Bottom Friction Force (MN)	*694*		*582*		*773*	
Fc: Effective Cohesion Force (MN)	*514*		*1391*		*1029*	
Fpb1, Fpb2: Passive Pressure for Basemat (MN)	*142*	*507*	*229*	*819*	*580*	*2072*
Fpbm=min(Fpb1, Fpb2) (MN)	*142*		*229*		*580*	
Fr: Sliding Resistance (=Fub+Fc+Fpbm)	*1350*		*2203*		*2382*	
FS (=Fr/Fv)	**1.42**		**1.38**		**1.52**	
<3-dimenaional Evaluation> 0.4*NS+1.0*EW+0.4*V						
Factored Horizontal Seismic Force (MN)	*360*	*787*	*585*	*1619*	*594*	*1243*
Fvr: Resultant Seismic Force (MN)	*865*		*1721*		*1378*	
Fub: Bottom Friction Force (MN)	*694*		*582*		*773*	
Fc: Effective Cohesion Force (MN)	*514*		*1391*		*1029*	
Fpb1, Fpb2: Passive Pressure for Basemat (MN)	*355*	*203*	*573*	*328*	*1450*	*829*
Fpbm=min(Fpb1, Fpb2) (MN)	*203*		*328*		*829*	
Fr: Sliding Resistance (=Fub+Fc+Fpbm)	*1411*		*2301*		*2631*	
FS (=Fr/Fv)	**1.63**		**1.34**		**1.91**	

Table 3.8-96(5) Sliding Evaluation Results for 3-dimensional Inputs: CB

Building width X	30.3 m					
Building width Y	23.8 m					
Total Weight	173 MN					
Buoyancy	101 MN					
Soil Condition	Soft		Medium		Hard	
Vertical Seismic Load	91 MN		83 MN		90 MN	
Minimum Vertical Load	18 MN		22 MN		19 MN	
	NS dir	EW dir	NS dir	EW dir	NS dir	EW dir
<3-dimenaional Evaluation> 1.0*NS+0.4*EW+0.4*V						
Factored Horizontal Seismic Force (MN)	*124*	*49*	*109*	*47*	*115*	*49*
Fvr: Resultant Seismic Force (MN)	*133*		*118*		*125*	
Fub: Bottom Friction Force (MN)	*11*		*12*		*14*	
Fc: Effective Cohesion Force (MN)	*112*		*100*		*96*	
Fpb1, Fpb2: Passive Pressure for Basemat (MN)	*39*	*123*	*69*	*221*	*187*	*594*
Fpbm=min(Fpb1, Fpb2) (MN)	*39*		*69*		*187*	
Fr: Sliding Resistance (=Fub+Fc+Fpbm)	*162*		*182*		*297*	
FS (=Fr/Fv)	**1.21**		**1.54**		**2.38**	
<3-dimenaional Evaluation> 0.4*NS+1.0*EW+0.4*V						
Factored Horizontal Seismic Force (MN)	*50*	*124*	*43*	*118*	*46*	*122*
Fvr: Resultant Seismic Force (MN)	*133*		*126*		*130*	
Fub: Bottom Friction Force (MN)	*11*		*12*		*14*	
Fc: Effective Cohesion Force (MN)	*112*		*100*		*96*	
Fpb1, Fpb2: Passive Pressure for Basemat (MN)	*97*	*49*	*173*	*88*	*466*	*237*
Fpbm=min(Fpb1, Fpb2) (MN)	*49*		*88*		*237*	
Fr: Sliding Resistance (=Fub+Fc+Fpbm)	*172*		*201*		*348*	
FS (=Fr/Fv)	**1.29**		**1.59**		**2.67**	

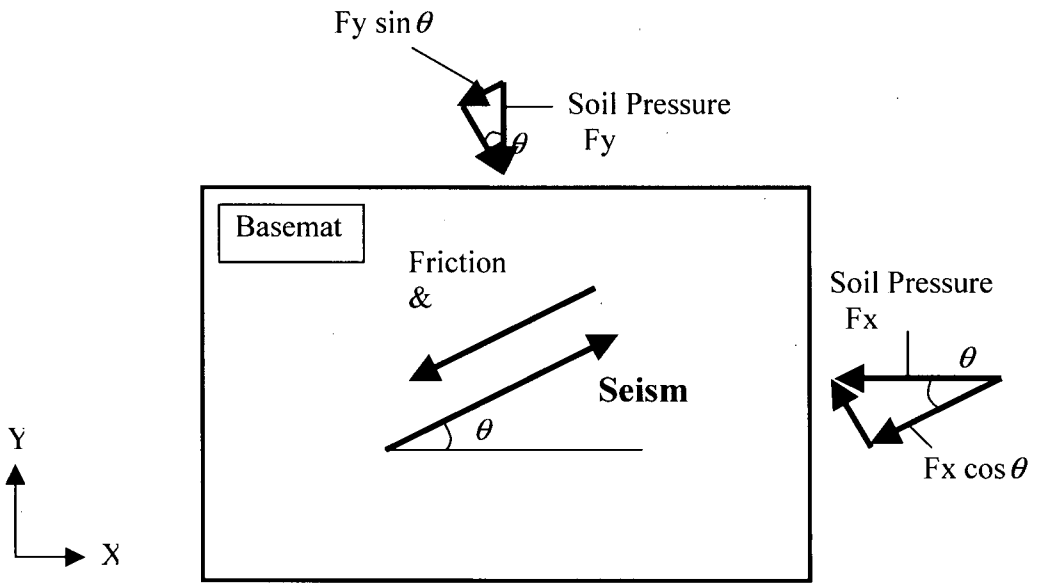

Figure 3.8-96(1) Horizontal Forces in Sliding Evaluation (Basemat Plan)

DCD Impact

No DCD change was made in response to this RAI Supplement.

NRC RAI 3.8-96, Supplement 3

The RAI Supplement 2 response, transmitted in GEH letter dated November 28, 2007, provided information to address nine items related to the stability analyses performed for the ESBWR foundations. The staff requests GEH to address the items discussed below which are still unresolved. The item numbers match the prior RAI Supplement 2 item numbers except for item number 10 which is a follow-up item from RAI 3.8-96, Supplement 1. Note that some of the items discussed below, in the context of sliding stability, are also applicable to overturning stability.

(1) In the equation given for passive soil pressure, why was the water pressure considered in resisting sliding, since there would be an equal and opposite water pressure on the other side of the building? Why wasn't the active soil pressure, on the entire foundation wall and basemat vertical edge, due to static and seismic loads considered on the other side of the building acting in the opposite direction to the passive pressures? Clearly define what surcharge loads (q) were utilized in the equation, because only known permanent surcharge loads (e.g., from other buildings) which would never be removed are appropriate.

(2)

a. GEH states that the shear strength of the soil, i.e., the resistance at the basemat bottom, is composed of friction and cohesion. However, the procedure described by GEH would only apply to a sliding capacity calculation where failure occurs within the soil medium; it would not apply to a sliding capacity calculation at the concrete to soil interface. Therefore, GEH also needs to consider the sliding capacity caused by sliding resistance between the concrete and soil interface (alone). Typically this consists of the bottom friction resistance term given in Tables 3.8-96(3) and 3.8-96(4) of the RAI response which is identified as "Fub: Bottom Friction Force." If any additional sliding resistance due to cohesion between the soil and concrete at the foundation bottom is used, then describe this approach and explain how it compares to other industry analytical methods such as the Navy Design Manual DM7-02 (available from various websites). Such an approach would require having a cohesive soil which would then become a site interface parameter. This will then need to be placed in DCD Tier 1 and Tier 2, and will need to be satisfied by the COL applicant. Note that whatever approach is used for all soil stability calculations, the evaluations must cover all soil types/conditions that the design certification is intended to cover (e.g., soft, medium, and hard soils; cohesive soils and granular (cohesionless) soils; varying soil friction angle; etc.).

b. For the case of sliding frictional resistance capacity between the foundation mat and soil, the staff does not agree that the use of the static coefficient of friction is conservative. The shear force required to initiate sliding between two surfaces is usually greater than the force required to maintain motion, and therefore it is not conservative to use the higher value to resist sliding. Furthermore, the use of the static frictional resistance at the bottom of the basemat is not consistent with the use of the passive soil resistance at the vertical edge of the basemat. This is because to mobilize the full passive resistance at the vertical edge of the basemat requires some movement of the basemat, in which case, the dynamic sliding friction would be more

applicable. Based on the above, GEH is requested to revise their approach to ensure that all of the resisting forces utilized to prevent sliding are developed using a consistent set of assumptions or provide justification for any alternative methods.

(3) No additional information needed.

(4) The equation provided for the calculation of cohesion (c') for use in sliding evaluations does not appear to be appropriate for its intended use. That is because of the following items: (a) It appears that this equation which determines the cohesion value c' is only applicable for cohesive soils, not granular (cohesionless) soils; (b) The use of the cohesion value is applicable for soil shear capacity calculations where failure may occur within the soil medium; it would not be applicable for a sliding capacity calculation at the concrete to soil interface; (c) The relationship between q_u and cohesion c' and the recommended use of 0.5 to 0.7 of c' for sliding stability evaluations could not be located in Reference 1, which was referred to in the RAI response; (d) The magnitudes of the bearing capacities tabulated in Table 3.8-96(2), which are used to determine c' seem to be unrealistically high. They would require, for the RB/FB medium soil case for example, a soil bearing pressure capacity of 7.3MPa (153ksf) which are extremely large compared to known soil and rock capacities (also identified under RAI 3.8-94). Therefore, GEH is requested to provide the technical basis for application of their approach for all soil types/conditions (e.g., soft, medium, and stiff; cohesive soils and granular (cohesionless) soils; varying soil friction angle; etc.) that the design certification is intended to cover or utilize other accepted analytical methods typically used for sliding evaluations as discussed under item (2) above.

(5) and (6) Please revise the response to these items based on any revision to Item (4).

(7) The reduction in contact area between the foundation basemat and the soil, due to some overturning uplift from seismic loads, needs to be considered in the calculations, especially since the margins currently shown in the tables will change and may be reduced when the sliding calculations are revised to address the other items in this RAI.

(8)

a. Confirm whether the response given means that the analysis and design of the SSCs in the ESBWR plant including development of the floor response spectra were all based on the enveloped responses for the lumped mass models and the SASSI models. If the analysis and design of the SSCs were based only on the lumped mass models, then did all of the building responses (i.e., member forces, nodal accelerations, nodal displacements, and floor response spectra) from the lumped mass models bound the responses from the SASSI models?

b. From the response to this item, it appears that the shear wave velocity of the backfill material does not have to match the surrounding undisturbed soil. Since the properties of the backfill material will likely be different, GEH is requested to identify the extent of excavation of the soil during the construction of the plant structures and identify what will be the requirements for the soil properties of the backfill material. If these are different than what were assumed in any of the seismic analyses and designs, then GEH is also requested to provide the technical basis for accepting the differences or confirm that the design basis building responses (including floor

response spectra) bound the expected values of the backfill soil properties (including reduced shear wave velocities). In the case of the foundation walls, GEH is also requested to explain why the elastically calculated wall pressures from seismic and other loads are still appropriate in view of the soil properties (including reduced shear wave velocity) of the backfill material. Unless the analyses and design cover the entire range of possible backfill soil properties, the assumed soil properties for the backfill materials should be considered a requirement, and therefore, clearly stated in the DCD as a site requirement.

(9) As noted in the staff's prior assessment of GEH RAI 3.8-96, Supplement 2, response, the traditional method for evaluating the stability (sliding and overturning) of nuclear plant structures in accordance with SRP 3.8 is to perform two separate 2-D evaluations, one for the N-S direction and one for the E-W direction. The minimum vertical downward load (deadweight minus upward buoyancy force minus upward vertical seismic force) is considered separately with the N-S horizontal seismic force and with the E-W horizontal seismic force.

In calculating the total upward vertical seismic force, the total N-S horizontal seismic force, and the total E-W horizontal seismic force at the soil/foundation interface, it is acceptable to use either SRSS or 100-40-40 (as defined in RG 1.92, Rev. 2) to combine the individual RESPONSES from response spectrum analyses for the 3 directions of seismic loading. Thus, the SRSS or the 100-40-40 methods are used only to determine the individual total structural response in a given direction (e.g., total shear force in N-S direction) from the individual collinear responses due to each of the three perpendicular seismic excitations (i.e., N-S shear force due to N-S earthquake, N-S shear force due to E-W earthquake, and N-S shear force due to vertical earthquake). The approach GEH is using does not follow this method, but instead combines non-collinear structural responses (i.e., N-S shear force, E-W shear force, and vertical force) following the 100-40-40 method, which is unacceptable. In lieu of this, the results from a 3-D time history analysis using statistically independent inputs can be used, to search the time history response for the worst case combination of vertical and horizontal seismic responses, which minimize the sliding and overturning factors of safety when combined with deadweight and upward buoyancy force.

GEH's proposed application of the 100-40-40 method in this case is not consistent with the staff's acceptance of the method, which as stated in RG 1.92, Rev. 2, applies to combination of individual response components when RSA is used. On this basis, it is not acceptable to the staff. The two approaches described above are acceptable. If GEH chooses to apply an alternate method, then it will need to submit a comparison to results that would be achieved by either one of the two methods described above.

(10) The crystalline powder which is proposed by GEH for use in the mud mat concrete below the basemat and which is intended to provide waterproofing to prevent water infiltration or ex-filtration still raises some questions. It appears that the concrete mud mat is unreinforced and therefore, cracking of the mud mat is very likely to occur and the crystalline powder may not be effective in preventing water infiltration or ex-filtration. GEH is requested to provide technical information that demonstrates the effectiveness of the crystalline additive in concrete foundations. This information should include: the requirements necessary for

proper use of this product, data which demonstrates its effectiveness under similar conditions (e.g., reinforced or unreinforced concrete, effect on concrete compressive strength, minimum thickness required for the concrete section, water pressure/head capacity and permeability versus water pressure/head, etc.), and what performance testing requirements will need to be satisfied during construction. In addition, specific information needs to be provided in the DCD regarding: the compressive strength of the concrete mud mat, if any reinforcement is needed, the acceptable range of thickness for the concrete mud mat, the inclusion of a statement (which was made in the Supplement 1 response) that "The mud mat construction is performed in accordance with the same standards and requirements as the basemat," and inclusion of performance testing requirements that will be needed during construction of the mud mat (e.g., permeability testing, compressive strength testing, etc.). GEH is also requested to explain what waterproofing system is relied upon to prevent infiltration of ground water through the walls below grade.

GE Response

(1) The water pressure term in the passive pressure equation described in the response to NRC RAI 3.8-96, Supplement 2 was not considered in resisting sliding. The effect of active soil pressure is considered in the revised sliding evaluation (see Item 9 for details) in terms of a net lateral resistance pressure (i.e., the difference between passive and active pressures) that is required to achieve minimum 1.1 factor of safety against sliding. In this revised sliding evaluation, the permanent surcharge loads from the Turbine Building are also included as lateral soil force applied to the RB/FB.

(2)

a. See Item (9) on the revised sliding evaluation approach in which the cohesion resistance is ignored

b. See item (9) on the revised sliding evaluation approach in which all of the resisting forces utilized to prevent sliding and associated site interface parameters are defined.

(3) In the NRC Audit in June 2008, the staff requested the following additional information.

For the sliding resistance between the basemat and mudmat, GEH needs to provide the technical basis for the coefficient of friction of 0.7. Currently ACI 349 Section 11.7.4.3 which states that mu is 0.6 concrete placed on concrete with surface not intentionally roughened and 1.0 if the surface is intentionally roughened as specified in 11.7.9 (roughened to ¼ inch).

The weak link at the sliding interface of concrete to soil is the soil, since the concrete surface in contact with soil is rough. As a result, the 0.7 coefficient of friction is controlled by the soil shear strength as a function of internal friction angle, tan (ϕ), where ϕ is equal to 35 degrees. Since this friction angle results in a friction coefficient larger than 0.6, which is the value for concrete placed against hardened concrete not intentionally roughened in

accordance with ACI 349 Section 11.7.4.3, roughening the mudmat top surface is required to ensure that the interface between the basemat and mudmat is not the controlling sliding surface. The following statement, "The top surface of the mudmat is intentionally roughened in accordance with ACI 349-01 Section 11.7.9 requirement." will be added to DCD Tier 2 Subsection 3.8.6.5.

(4) The equation for the calculation of cohesion (c') is no longer used in the revised sliding evaluation in Item (9).

(5) and (6) See Item (4).

(7) The reduction in contact area between the foundation basemat and the soil, due to some overturning uplift from seismic loads, is considered in a separate calculation of bearing pressures in the response to RAI 3.8-94 S03, transmitted to the NRC on December 9, 2008 via MFN 06-407, Supplement 10.

(8)

a. The building responses are all based on the enveloped responses for the lumped mass models and the SASSI models.

b. The effects of backfill adjacent to building walls on structural response can be addressed in two aspects. One deals with the global SSI effect and other with the local wall pressures. For the global SSI effect, the design forces are controlled by non-embedded cases using lumped mass model as shown in DCD Tier 2 Subsection 3A.8.7. This has been further confirmed by additional SASSI analyses for uniform sites taking into account embedment as discussed in RAI 3.8-94 S03. The effect of embedment on the design floor response spectra, as discussed in RAI 3.8-94 S03 is only limited to high frequency range at few locations in the CB and FPE. Inclusion of high frequency response in the design response spectra is a conservative design requirement without consideration of the beneficial effects of seismic wave incoherence. Therefore, it can be concluded that for the purpose of the global SSI response, no additional site interface requirements for the property of backfill material are needed in the DCD. For the local effect on wall lateral pressures, the main parameters are the density, Poisson's ratio and peak ground acceleration in accordance with the ASCE 4-98 Section 3.5.3.2 Elastic Solution method. To ensure the wall design seismic lateral pressures induced from backfill are not exceeded, a COL item will be added in DCD Tier 2 Table 2.0-1 to limit the product of peak ground acceleration (α) of the site-specific Foundation Input Response Spectra (FIRS) in g's, Poisson's ratio (ν) and density (γ) as follows:

$$\alpha\,(0.95\nu + 0.65)\,\gamma: \quad 1220\ \text{kg/m}^3\ (76\ \text{lbf/ft}^3)\ \text{maximum}$$

Additional site interface parameters for backfill related to sliding are defined in Item (9) below.

(9) This part of the RAI response presents the revised sliding evaluation. Time-consistent phasing between the horizontal base shear and vertical base force is considered to compute the sliding factor of safety as a function of time when combined with deadweight and

upward buoyancy force. In this evaluation the base shears and base vertical forces calculated by SASSI analyses with embedment included are used. See RAI 3.8-94 S03 for details of additional SASSI analyses for uniform sites.

1. Soil Properties

The following soil properties are assumed in the sliding evaluation. They will be stated in the DCD Table 2.0-1 as site interface requirements.

- Angle of internal friction

  $\phi = 35$ degree minimum for all sites

- Backfill on sides of Seismic Category I structures (not applicable if the fill material is concrete)

  Product of at-rest soil pressure coefficient (k_o) and density (γ)

  $k_0\gamma$: 750 kg/m^3 (47 lbf/ft^3) minimum

  Product of the difference of passive (k_p) and active pressure (k_a) coefficients and density (γ)

  $(k_p-k_a)\gamma$: 1100 kg/m^3 (69 lbf/ft^3) minimum

- Backfill underneath FWSC against shear keys (not applicable if the fill material is concrete)

  At-rest pressure coefficient (k_o')

  k_0' : 0.36 minimum

  Difference of passive (k_p') and active pressure (k_a') coefficients

  $(k_p'-k_a')$: 2.5 minimum

2. Sliding Evaluation Method

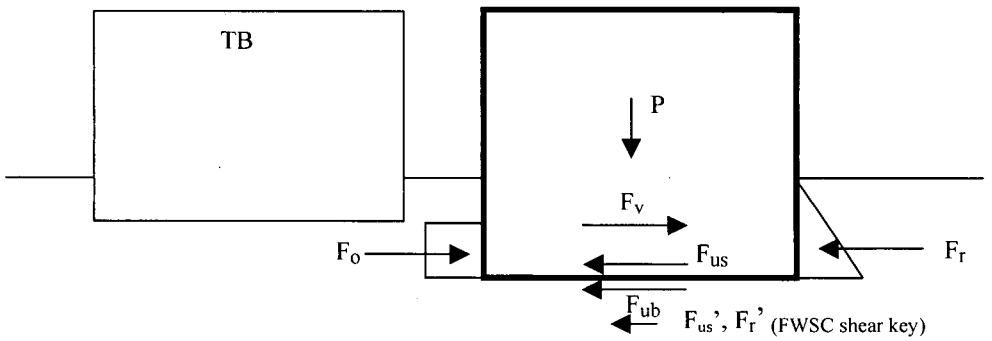

FS (factor of safety) is evaluated by taking the minimum values of the *FS(t)* time history calculated per the following equation.

$$FS(t) = \frac{F_{ub}(t) + F_{us} + F_r + F_{us}' + F_r'}{F_v(t) + F_o} \quad \text{.....(1)}$$

where,

$F_v(t)$: Base shear time history at bottom of basemat.

F_o: Lateral soil force on RB due to TB surcharge load.

$F_{ub}(t)$: Friction resistance force provided by basemat bottom.

For "Dry sites" where ground water is below the foundation: $F_{ub}(t) = P \tan\phi = (0.9D - V_z(t)) \tan\phi$

For "Wet sites" where ground water is above the foundation: $F_{ub}(t) = P \tan\phi = (0.9D - B) \tan\phi$ (undrained shear strength)

where D: Dead weight

$V_z(t)$: Vertical seismic force time history

B: Buoyancy

The vertical seismic force is not considered in the building stability calculations under the undrained seismic event. The peaks in seismographic strong motion time histories last only for hundredths of seconds which is at least an order of magnitude less than the time it takes to adjust pore pressures. The delay in adjustment of pore pressures results in that there is not enough time for the pore fluid to accommodate the changes in pore water pressure and the effective normal stress does not change, and hence, the shear strength does not change either. Therefore, the undrained shear strength is not affected by the vertical seismic loading.

F_{us}: Skin Friction resistance force provided by basemat side parallel to the direction of motion.

$F_{us} = P_0 \tan\phi$ ..... (2)

where,

$P_0 = k_o \gamma L H^2/2$: At-rest soil force on the basemat side neglecting surcharge term and water pressure term

where, L: Length of basemat parallel to the direction of motion

H: Embedment depth

F_r: Lateral resistance pressure along the wall and basemat normal to the direction of motion.

Additional sliding resistance is provided by the side soil and it is defined to be the difference of the passive and active pressures. The net resistance is determined to achieve the required 1.1 FS, while not exceeding the at-rest soil pressure considered in the wall design.

$F_r = (k_p - k_a) \gamma L H^2/2$ ..... (3)

where, L: Length of building normal to the direction of motion

H: Embedment depth

F_{us}': Skin Friction resistance force provided by FWSC shear-key side parallel to the direction of motion.

$F_{us}' = P_0' \tan\phi$ ..... (4)

where,

$P_0' = k_o' q L' H'$: At-rest soil force on the FWSC shear-key side

where, q: FWSC surcharge load

L': Length of shear-key parallel to the direction of motion

H': Shear-key depth

F_r': Lateral resistance pressure along FWSC shear-key normal to the direction of motion. The net resistance is determined to achieve the required 1.1 FS.

$F_r' = (k_p' - k_a') q L' H'$: ..... (5)

where, q: FWSC surcharge load

L': Length of shear-key normal to the direction of motion

H': Shear-key depth

3. Summary of Calculated FS

Summary

(1) Dry condition

	L-1		L-2		L-3		L-4		SOFT		MEDIUM		HARD	
	NS dir	EW dir	NS dir	EW dir	NS dir	EW dir	NS dir	EW dir	NS dir	EW dir	NS dir	EW dir	NS dir	EW dir
RB/FB	1.86	3.50	-	-	2.30	3.42	-	-	2.43	3.04	1.68	2.27	1.98	2.54
CB	2.10	1.97	-	-	2.11	2.04	-	-	2.17	2.09	1.61	1.63	1.58	1.84
FWSC (H=3.0m)	1.27	1.33	1.10	1.34	1.28	1.49	1.12	1.28	1.28	1.48	1.27	1.33	1.12	1.18

(2) Undrained condition

	L-1		L-2		L-3		L-4		SOFT		MEDIUM		HARD	
	NS dir	EW dir	NS dir	EW dir	NS dir	EW dir	NS dir	EW dir	NS dir	EW dir	NS dir	EW dir	NS dir	EW dir
RB/FB	1.66	2.87	-	-	1.86	2.89	-	-	1.92	2.51	1.53	2.05	1.66	2.04
CB	1.42	1.33	-	-	1.41	1.39	-	-	1.44	1.40	1.14	1.15	1.10	1.11
FWSC (H=3.0m)	1.45	1.46	1.33	1.57	1.53	1.67	1.33	1.54	1.50	1.62	1.55	1.63	1.44	1.62

Minimum FS

	Minimum
RB/FB	1.53
CB	1.10
FWSC	1.10

Cases L-2 and L-4 are not considered for RB/FB and CB. To be consistent with this limitation, a new site interface parameter for maximum ratio of shear wave velocity in adjacent layers will be added in DCD Tier 2 Table 2.0-1 to ensure that the site layering does not have large contrast in shear wave velocities as generic layer sites L-2 and L-4 (see DCD Tier 2 Table 3A-3 for descriptions of layered sites) as follows:

Bottom 20 m (66 ft) layer to top 20 m (66 ft) layer: 2.5

Bottom 40 m (131 ft) layer to top 20 m (66 ft) layer: 2.5

Adjacent layers are the two layers with a total depth of 40 m (131 ft) or 60 m (197 ft) below grade. The first layer, termed top layer, covers the top 20 m (66 ft). The second layer, termed bottom layer, covers the next 20 m (66 ft) or 40 m (131 ft). The ratio is the equivalent uniform velocity of the bottom layer divided by the equivalent uniform velocity of the top layer. The equivalent uniform shear velocity is computed using the equation in Note 8 to DCD Tier 2 Table 2.0-1 except that 1) the depth of the soil column is the thickness of the layer under consideration and 2) either the lower bound seismic strain (i.e., strain compatible) profile or the best estimate low strain profile can be used since only the velocity ratio is of interest. If backfill material is used in any of these layers, the required minimum shear wave velocity of the backfill is determined from the Veq equation in Note (8) to this table setting Veq equal to 300 m/s (1000 ft/s) for the entire soil column with the depth defined in Note (8). This velocity ratio condition does not apply to the FWSC nor to the RB/FB and CB if founded on rock-like material having a shear wave velocity of 1067 m/sec (3500 ft/sec) or higher.

(10)

The integral crystalline material waterproofs and protects concrete in-depth and is applied as an admixture to the mud mat concrete mix at the time of batching. The crystalline waterproofing material can self-heal cracks up to 0.4 mm.

As an added waterproofing measure for any mud mat cracks exceeding 0.4 mm during basemat construction, once the mud mat has cured and just before pouring the basemat, the crystalline waterproofing material will be applied at the top surface of the mud mat. Once the basemat is poured, this added crystalline waterproofing material will penetrate into the mud mat to self-heal concrete cracks. In addition, any mud mat cracks will also be filled by the basemat cement paste.

Calculated maximum crack widths for the mud mat during normal conditions and for the basemat during construction and normal conditions are contained in Table 3.8-96(6). The basemat is designed to limit the concrete crack width during construction and normal conditions to no more than 0.4 mm.

Technical information that demonstrates the effectiveness of crystalline waterproofing material for concrete, including the requirements necessary for proper use of the product, data which demonstrates its effectiveness, and necessary performance testing requirements that need to be satisfied during construction, are attached as Attachment 3.8-96, Supplement 3(X), Attachment 3.8-96, Supplement 3(Y) and Attachment 3.8-96, Supplement 3(Z).

The mud mat is designed as structural plain concrete in accordance with ACI 318-05. The specified compressive strength of concrete at 28 days, or earlier, is 2500 psi for the mud mat. The thickness of the mud mat is no less than 8 inches. The performance testing requirements for the mud mat are those delineated in ACI 318-05. The mud mat construction is performed in accordance with the same standards and requirements as the basemat. These mud mat details will be added as DCD Tier 2 Subsection 3.8.6.5 in Revision 6.

As stated in the response to NRC RAI 3.8-89, which was transmitted to the NRC via MFN 06-407 on November 8, 2006, a membrane waterproofing system is applied to the exterior walls and is relied upon to prevent infiltration of ground water through the exterior walls below grade.

Table 3.8-96(6) Calculated Maximum Crack Widths for Basemat and Mud-mat

	*During Construction *1*	*During Normal Condition*
Basemat	*0.13 mm*	*0.12 mm*
Mud-mat	---	*0.17 mm*

Note *1: Crack width at the basemat bottom of the first concrete layers during the second concrete pouring were calculated, based on the results of analyses performed for RAI 3.8-93 response.

DCD Impact

DCD Tier 1 Table 5.1-1 will be revised in Revision 6 as noted in the attached markup.

DCD Tier 2 Subsection 3.8.6.5 will be added, Tables 2.0-1, Subsections 3G.1.5.5, Table 3G.1-57, Subsections 3G.2.5.5, Table 3G.2-26, Subsections 3G.4.5.5, and Table 3G.4-22 will be revised, and Figures 3G.1-65, 3G.2-17, and 3G.4-11 will be deleted as noted in the attached markup. These changes will be made in Revision 6 of DCD Tier 2.

Table 5.1-1
Envelope of ESBWR Standard Plant Site Parameters (continued)

Soil Properties:	- Minimum Static Bearing Capacity:[2]	
	Reactor/Fuel Building:	699 kPa (14,600 lbf/ft^2)
	Control Building:	292 kPa (6,100 lbf/ft^2)
	Fire Water Service Complex:	165 kPa (3,450 lbf/ft^2)
	- Minimum Dynamic Bearing Capacity (SSE + Static): [2]	
	Reactor/Fuel Building:	
	Soft:	~~27~~1200 kPa (2~~5~~6,41~~0~~0 lbf/ft^2)
	Medium:	~~73~~1500 kPa (~~152,5~~31,400 lbf/ft^2)
	Hard:	~~54~~1100 kPa (~~11~~23,0~~8~~00 lbf/ft^2)
	Control Building:	
	Soft:	~~280~~440 kPa (~~58~~9,2~~5~~00 lbf/ft^2)
	Medium:	22~~5~~00 kPa (45~~52~~,9~~3~~00 lbf/ft^2)
	Hard:	~~24~~2~~0~~0 kPa (8~~50~~,8~~2~~00 lbf/ft^2)
	Firewater Service Complex (FWSC):	
	Soft:	44~~6~~0 kPa (9,6~~2~~00 lbf/ft^2)
	Medium:	69~~5~~40 kPa (14~~1~~,3~~4~~00 lbf/ft^2)
	Hard:	120~~67~~0 kPa (25~~14~~,1~~0~~00 lbf/ft^2)
	- Minimum Shear Wave Velocity: [3]	300 m/s (1000 ft/s)
	- Liquefaction Potential:	
	Seismic Category I Structures	None under footprint of Seismic Category I structures resulting from site-specific SSE.
	- Angle of Internal Friction	≥ 35~~0~~ degrees
Seismology:	- SSE Horizontal Ground Response Spectra: [4]	See Figure 5.1-1
	- SSE Vertical Ground Response Spectra: [4]	See Figure 5.1-2
Hazards in Site Vicinity:	- Site Proximity Missiles and Aircraft:	< about 10^{-7} per year
	- Volcanic Activity:	None
	- Toxic Gases:	None *
* Maximum toxic gas concentrations at the Main Control Room (MCR) HVAC intakes:	< toxicity limits	
Required Stability of Slopes:	- Factor of safety for static (non-seismic) loading	1.5
	- Factor of safety for dynamic (seismic) loading due to site-specific SSE	1.1
Maximum Settlement Values for Seismic Category I Buildings [5]		
Maximum Settlement at any corner of basemat	-Under Reactor/Fuel Buidling	103 mm (4.0 inches)
	-Under Control Building	18 mm (0.7 inches)
	-Under FWSC Structure	17 mm (0.7 inches)

Table 2.0-1

Envelope of ESBWR Standard Plant Site Parameters (continued)

Soil Properties: [16]	- Minimum Static Bearing Capacity: [7] Reactor/Fuel Building: 699 kPa (14,600 lbf/ft^2) Control Building: 292 kPa (6,100 lbf/ft^2) Firewater Service Complex: 165 kPa (3,450 lbf/ft^2) - Minimum Dynamic Bearing Capacity (SSE + Static): [7] Reactor/Fuel Building: Soft: ~~27~~1200 kPa (2~~5~~6,41~~0~~00 lbf/ft^2) Medium: ~~73~~1500 kPa (~~152,5~~31,400 lbf/ft^2) Hard: ~~54~~1100 kPa (~~112~~3,0~~8~~00 lbf/ft^2) Control Building: Soft: ~~280~~440 kPa (~~58~~9,2~~5~~00 lbf/ft^2) Medium: 22~~5~~00 kPa (45~~52~~,9~~3~~00 lbf/ft^2) Hard: ~~24~~2~~0~~0 kPa (8~~50~~,8~~2~~00 lbf/ft^2) Firewater Service Complex (FWSC): Soft: 44~~6~~0 kPa (9,6~~2~~00 lbf/ft^2) Medium: 69~~54~~0 kPa (14~~1~~,34~~0~~0 lbf/ft^2) Hard: 120~~67~~0 kPa (25~~14~~,1~~0~~00 lbf/ft^2) - Minimum Shear Wave Velocity: [8] 300 m/s (1000 ft/s) - Maximum Ratio of Shear Wave Velocities in Adjacent Layers[17] Bottom 20 m (66 ft) layer to top 20 m (66 ft) layer: 2.5 Bottom 40 m (131 ft) layer to top 20 m (66 ft) layer: 2.5 - Liquefaction Potential: Seismic Category I Structures: None under footprint of Seismic Category I structures resulting from site-specific SSE. Other than Seismic Category I Structures: See Note (14) - Angle of Internal Friction: ≥ 35~~0~~ degrees - Backfill on sides of Seismic Category I structures (not applicable if the fill material is concrete) Product of peak ground acceleration, Poisson's ratio and density: $\alpha(0.95\nu+0.65)\gamma$: 1220 kg/m^3 (76 lbf/ft^3) maximum Product of at-rest pressure coefficient and density: $k_0\gamma$: 750 kg/m^3 (47 lbf/ft^3) minimum Product of the difference of passive and active pressure coefficients and density: $(k_p-k_a)\ \gamma$: 1100 kg/m^3 (69 lbf/ft^3) minimum - Backfill underneath FWSC against shear keys (not applicable if the fill material is concrete) At-rest pressure coefficient: k_0' : 0.36 minimum Difference of passive and active pressure coefficients: $(k_p-k_a)'$: 2.5 minimum

(9) Safe Shutdown Earthquake (SSE) design ground response spectra of 5% damping, also termed Certified Seismic Design Response Spectra (CSDRS), are defined as free-field outcrop spectra at the foundation level (bottom of the base slab) of the Reactor/Fuel and Control Building structures. For ground surface founded Firewater Service Complex structures, the CSDRS is 1.35 times the values shown in Figures 2.0-1 and 2.0-2.

(10) Values reported here are actually design criteria rather than site design parameters. They are included here because they do not appear elsewhere in the DCD.

(11) If a selected site has a X/Q value that exceeds the ESBWR reference site value, the COL applicant will address how the radiological consequences associated with the controlling design basis accident continue to meet the dose reference values provided in 10 CFR ~~50.34~~52.79(a)(1)(vi) and control room operator dose limits provided in General Design Criterion 19 using site-specific X/Q values.

(12) If a selected site has X/Q values that exceed the ESBWR reference site values, the release concentrations in Table 12.2-17 would be adjusted proportionate to the change in X/Q values using the stack release information in Table 12.2-16. In addition, for a site selected that exceeds the bounding X/Q or D/Q values, the COL applicant will address how the resulting annual average doses (Table 12.2-18b) continue to meet the dose reference values provided in 10 CFR 50 Appendix I using site-specific X/Q and D/Q values.

(13) Value was selected to comply with expected requirements of southeastern coastal locations.

(14) Localized liquefaction potential under other than Seismic Category I structures is addressed per SRP 2.5.4 in Table 2.0-2.

(15) Settlement values are long-term (post-construction) values except for differential settlement within the foundation mat. The design of the foundation mat accommodates immediate and long-term (post-construction) differential settlements after the installation of the basemat.

(16) For sites not meeting the soil property requirements, a site specific analysis is required.

(17) Adjacent layers are the two layers with a total depth of 40 m (131 ft) or 60 m (197 ft) below grade. They correspond to the top and middle layers shown in Table 3A.3-3 for layered site cases 2 and 4. The first layer, termed top layer, covers the top 20 m (66 ft). The second layer, termed bottom layer, covers the next 20 m (66 ft) or 40 m (131 ft). The ratio is the equivalent uniform velocity of the bottom layer divided by the equivalent uniform velocity of the top layer. The equivalent uniform shear velocity is computed using the equation in Note (8) to this table except that 1) the depth of the soil column is the thickness of the layer under consideration and 2) either the lower bound seismic strain (i.e., strain compatible) profile or the best estimate low strain profile can be used because only the velocity ratio is of interest. If backfill material is used in any of these layers, the required minimum shear wave velocity of the backfill is determined from the Veq equation in Note (8) to this table by setting Veq equal to 300 m/s (1000 ft/s) for the entire soil column with the depth defined in Note (8).This velocity ratio condition does not apply to the FWSC nor to the RB/FB and CB if founded on rock-like material having a shear wave velocity of 1067 m/sec (3500 ft/sec) or higher.

3.8.5.6 Materials, Quality Control, and Special Construction Techniques

The foundations of Seismic Category I structures are constructed of reinforced concrete using proven methods common to heavy industrial construction. For further discussion, see Subsection 3.8.1.6 for the containment foundation mat and Subsection 3.8.4.6 for the foundations of the other Seismic Category I structures.

3.8.5.7 Testing and In-Service Inspection Requirements

The foundations of Seismic Category I structures are monitored per NUREG-1801 and 10 CFR 50.65 as clarified in RG 1.160, in accordance with Section 1.5 of RG 1.160.

3.8.6 Special Topics

3.8.6.1 Foundation Waterproofing

The selected waterproofing material for the bottom of the basemat is a chemical crystalline powder that is added to the mud mat mixture forming a water proof barrier when cured. No membrane waterproofing is used under the foundations in ESBWR.

3.8.6.2 Site-Specific Physical Properties and Foundation Settlement

See Table 2.0-1 for soil properties requirements of site-specific foundation bearing capacities, minimum shear wave velocity, liquefaction potential, angle of internal friction and maximum settlement values for Seismic Category I buildings.

For sites not meeting the soil property requirements, a site-specific analysis is required to demonstrate that site-specific conditions are enveloped by the standardized design.

3.8.6.3 Structural Integrity Pressure Result

See DCD Tier 1 Table 2.15.1-2 for the SIT of the containment structure, which is an ITAAC item.

3.8.6.4 Identification of Seismic Category I Structures

See Subsections 3.8.1, 3.8.2, 3.8.3 and 3.8.4 for identification of Seismic Category I structures.

3.8.6.5 Foundation Mud Mat

The mud mat is designed as structural plain concrete in accordance with ACI 318-05. The specified compressive strength of concrete at 28 days, or earlier, is 17.3 MPa (2500 psi) for the mud mat. The thickness of the mud mat is no less than 200 mm (8 in.). The performance testing requirements for the mud mat are those delineated in ACI 318-05. The mud mat construction is performed in accordance with the same standards and requirements as the basemat. The top surface of the mudmat is intentionally roughened in accordance with ACI 349-01 Subsection 11.7.9 requirement.

are constructed of conventional reinforced concrete. Among the elements at Sections 26 and 27, Element #96113 and 98424 are included in the MS tunnel slabs.

The maximum rebar stress of 346.1 MPa (50.20 ksi) is found at Section 26 as shown in Table 3G.1-53, whereas the maximum stress of steel plate is found to be 150.2 MPa (21.78 ksi) at Section 26 as shown in Table 3G.1-55. The maximum transverse shear force is found to be 8.16 MN/m (46.60 kips/in) against the shear strength of 9.08 MN/m (51.80 kips/in).

3G.1.5.4.3.4 Pool Girders

The maximum rebar stress of 263.4 MPa (38.20 ksi) is found in the horizontal rebar at Section 29 as shown in Table 3G.1-55, whereas the maximum vertical rebar stress is found to be 249.0 MPa (36.11 ksi) at Section 28 as shown in Table 3G.1-55. The maximum transverse shear force is found to be 1.10 MN/m (6.28 kips/in) against the shear strength of 5.31 MN/m (30.30 kips/in).

3G.1.5.4.3.5 Main Steam Tunnel Floors and Walls

Section 31 is selected for the MS tunnel wall (Element #150122) and slabs (Elements #96611 and #98614). The MS tunnel is composed of the reinforced concrete structures as described in Subsection 3G.1.5.4.3.3.

The maximum rebar stress is found to be 220.5 MPa (31.98 ksi) in Table 3G.1-51, and the maximum transverse shear force is found to be 0.47 MN/m (2.68 kips/in) against the shear strength of 3.70 MN/m (21.1 kips/in).

3G.1.5.5 Foundation Stability

The RB, the concrete containment and the FB share a common foundation. The stabilities of the foundation against overturning, sliding and floatation are evaluated. The energy approach is used in calculating the factor of safety against overturning.

The factors of safety against overturning, sliding and floatation are given in Table 3G.1-57. All of these meet the acceptance criteria given in Table 3.8-14. ~~In the sliding evaluation the gap between the building and excavated soil is backfilled with concrete up to the top level of the basemat as shown in Figure 3G.1-65.~~

Maximum soil bearing stress is found to be 699 kPa (14600 psf) due to dead plus live loads.

The maximum bearing stresses shown in Table 3G.1-58 are evaluated using the Energy Balance Method (Reference 3G.1-2). In order to verify the results, toe pressures obtained by the finite element analyses using the RB/FB global model are compared with the values in Table 3G.1-58. As a result, the bearing pressures calculated by the Energy Balance Method envelop the pressures of finite element analyses.

A series of parametric analyses are performed to verify the assumptions and results of the global finite element analysis is used as the baseline for the basemat design.

- Lateral variations of soil stiffness are evaluated using the global finite element model. Analyses are performed assuming "Hard spot" and "Soft spot" under the RPV Pedestal area.

Table 3G.1-57

Factors of Safety for Foundation Stability

Load Combination	Overturning		Sliding		Floatation	
	Required	Actual	Required	Actual	Required	Actual
D + H + E'	1.1	111.1	1.1	1.53~~41~~	--	--
D + F'	--	--	--	--	1.1	3.48

Where,
D = Dead Load
H = Lateral soil pressure
E' = Safe Shutdown Earthquake
F' = Buoyant forces of design basis flood

Table 3G.1-58

Maximum Dynamic Soil Bearing Stress Involving SSE + Static

	Site Condition*		
	Soft (V_s = 300 m/sec)	Medium (V_s = 800 m/sec)	Hard ($V_s \geq$ 1700 m/sec)
Bearing Stress (MPa)	1.2~~.7~~	~~7~~1.~~3~~5	1~~5~~.41

* See Table 3A.3-1 for site properties. For site specific application, use the larger value or a linearly interpolated value of the applicable range of shear wave velocities at the foundation level.

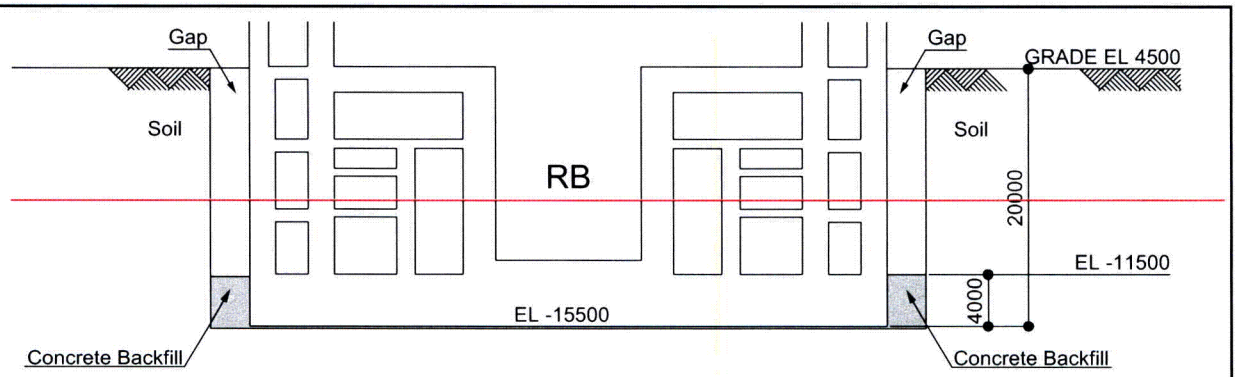

~~Note: Backfill method for gap and excavation method (e.g., vertical cut, open cut) is determined considering actual site conditions. The gap is completely filled with compacted engineered backfill material.~~

Figure 3G.1-65. ~~Concrete Backfill in Sliding Evaluation~~Deleted

be 3.159 MN/m (18.04 kips/in) against the shear strength of 4.943 MN/m (28.23 kips/in) as shown in Table 3G.2-25.

3G.2.5.5 Foundation Stability

The stabilities of the CB foundation against overturning, sliding and floatation are evaluated. The energy approach is used in calculating the factor of safety against overturning.

The factors of safety against overturning, sliding and floatation are given in Table 3G.2-26. All of these meet the acceptance criteria given in Table 3.8-14. ~~In the sliding evaluation the gap between the building and excavated soil is backfilled with concrete up to the top level of the basemat as shown in Figure 3G.2-17.~~

Maximum soil bearing stress is found to be 292 kPa (6100 psf) due to dead plus live loads. Maximum bearing stresses for load combinations involving SSE are shown in Table 3G.2-27 for various site conditions.

3G.2.5.5.1 Foundation Settlement

The basemat design is checked against the normal and differential settlement of the CB. It is found that the basemat can resist the maximum settlement at mat foundation corner of 18 mm (0.7 in.) and the settlement averaged at four corners of 12 mm (0.5 in.). The relative displacement between two corners along the longest dimension of the building basemat calculated under linearly varying soil stiffness is 14 mm (0.6 in). The estimated differential settlement between buildings (RB/FB and CB) is 85 mm (3.3 in.). These values are specified as maximum settlements in Table 2.0-1.

3G.2.5.6 Tornado Missile Evaluation

The CB is shown in Figure 3G.2-3. The minimum thickness required to prevent penetration, concrete spalling and scabbing is evaluated. The methods and procedures are shown in Subsection 3.5.3.1.1.

Table 3G.2-26

Factors of Safety for Foundation Stability

Load Combination	Overturning		Sliding		Floatation	
	Required	Actual	Required	Actual	Required	Actual
D + H + E'	1.1	62.5	1.1	1.10~~28~~	--	--
D + F'	--	--	--	--	1.1	1.85

Where,

D = Dead Load

H = Lateral soil pressure

E' = Safe Shutdown Earthquake

F' = Buoyant forces of design basis flood

Table 3G.2-27

Maximum Dynamic Soil Bearing Stress Involving SSE + Static

	Site Condition*		
	Soft (V_s = 300 m/sec)	Medium (V_s = 800 m/sec)	Hard ($V_s \geq$ 1700 m/sec)
Bearing Stress (MPa)	~~2~~0.~~8~~44	~~2~~2.~~5~~2	~~2~~0.42

* See Table 3A.3-1 for site properties. For site specific application, use the larger value or a linearly interpolated value of the applicable range of shear wave velocities at the foundation level.

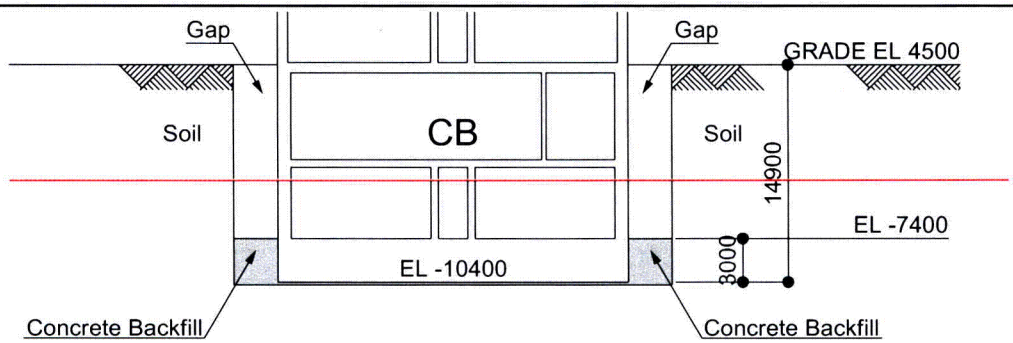

~~Note: Backfill method for gap and excavation method (e.g., vertical cut, open cut) is determined considering actual site conditions. The gap is completely filled with compacted engineered backfill material.~~

Figure 3G.2-17. ~~Concrete Backfill in Sliding Evaluation~~Deleted

3G.4.5.5 Foundation Stability

The stabilities of the FWSC foundation against overturning, sliding and floatation are evaluated. The energy approach is used in calculating the factor of safety against overturning.

The factors of safety against overturning, sliding and floatation are given in Table 3G.4-22. All of these meet the acceptance criteria given in Table 3.8-14. Shear keys under the basemat shown in Figure 3G.4-1 are used to resist sliding. ~~In addition, the gap between the basemat and excavated soil is backfilled with concrete up to the grade level as shown in Figure 3G.4-11.~~

Maximum soil bearing stress is found to be 165 kPa (3450 psf) due to dead plus live loads. Maximum bearing stresses for load combinations involving SSE are shown in Table 3G.4-23 for various site conditions.

3G.4.5.5.1 Foundation Settlement

The basemat design is checked against the normal and differential settlement of the FWSC. It is found that the basemat can resist the maximum settlement at mat foundation corner of 17 mm (0.7 in.) and the settlement averaged at four corners of 10 mm (0.4 in.). The relative displacement between two corners along the longest dimension of the building basemat calculated under linearly varying soil stiffness is 12 mm (0.5 in). These values are specified as maximum settlements in Table 2.0-1.

3G.4.5.6 Tornado Missile Evaluation

The FWSC is shown in Figure 3G.4-1. The minimum thickness required to prevent penetration, concrete spalling and scabbing is evaluated. The methods and procedures are shown in Subsection 3.5.3.1.1.

Table 3G.4-22

Factors of Safety for Foundation Stability

Load Combination	Overturning		Sliding		Floatation	
	Required	Actual	Required	Actual	Required	Actual
D + H + E'	1.1	129.1	1.1	1.10~~3~~	--	--
D + F'	--	--	--	--	1.1	7.4

Where,

D = Dead Load

H = Lateral soil pressure

E' = Safe Shutdown Earthquake

F' = Buoyant forces of design basis flood

Table 3G.4-23

Maximum Dynamic Soil Bearing Stress Involving SSE + Static

	Site Condition*		
	Soft (V_s = 300 m/sec)	Medium (V_s = 800 m/sec)	Hard ($V_s \geq$ 1700 m/sec)
Bearing Stress (MPa)	0.446	0.69~~54~~	1~~0.67~~2

*: See Table 3A.3-1 for site properties. For site specific application, use the larger value or a linearly interpolated value of the applicable range of shear wave velocities at the foundation level.

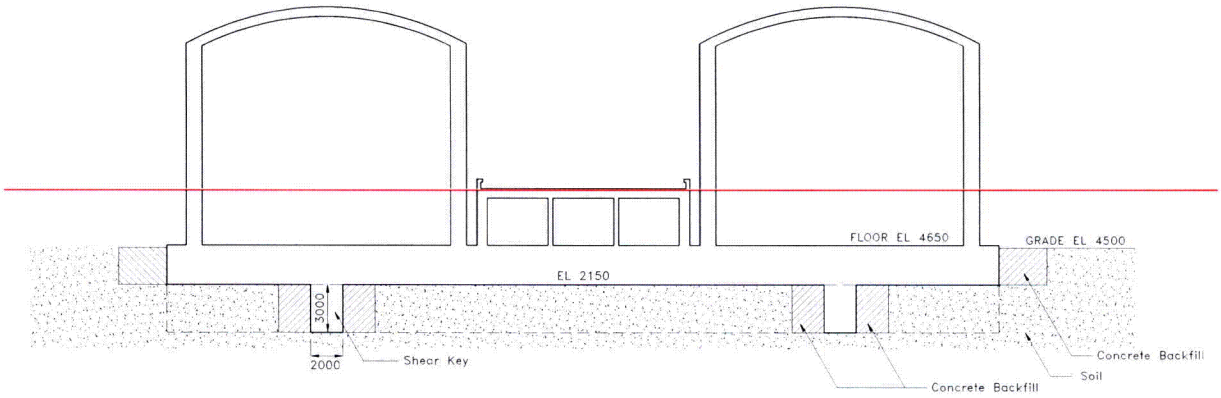

~~Note: Excavation and backfill method is determined considering actual site conditions.~~

Figure 3G.4-11. ~~Shear Keys and Concrete Backfill in Sliding Evaluation~~Deleted

Attachment 3.8-96, Supplement 3(X)
(1 page)

Crystalline Waterproofing Material
Technical Data

TECHNICAL DATA

PENETRON AND PENETRON ADMIX

Penetron and Penetron Admix will meet or exceed the following physical properties:

Penetron Admix		
Water Permeability	DIN 1048	after 56 days = < 5.35 x 10^{-13} m/sec
Compressive Strength	(ASTM C39)	After 28 days = >6%
Penetron Coated Concrete		
Water Permeability	(CRD-C-48-73)	After 28 days = <1.9x10^{-14}cm/sec (before treatment 1.8x10^{-11}cm/sec)
Water Permeability under head pressure	(CRD-C-48-73)	Can withstand = >232 PSI (514 ft. head water pressure, or 156.78m) or 1.54 MPa (16 Bar) with no measurable leakage
Compressive Strength	(ASTM C39)	After 28 days = >6%
Freeze/Thaw Cycle Test	(ASTM C-672-76)	50 Cycles - Marked decrease in erosion compared to untreated samples
Chemical Resistance	(ASTM C-267-77)	Resistant to alkaline/acid conditions. pH range 3-11 constant contact
Radiation Resistance	(ASTM N69-1967)	No effect from gamma radiation = >5.76x10^{4} Rads
	(ISO 7031)	No effect from gamma radiation 50 M Rads
Chloride Content	(AASHTO T-260)	Negligible amounts of chlorides are contained in waterproofing substance. Penetron's waterproofing effects are NOT related to chlorides
Nontoxic	(BS 6920: Section 2.5)	PASSES European Union Environmental Lic
	(16 CFR 1500)	PASSES European Union Environmental Lic
Approved for potable water use	U.S. EPA and State of New York DOH	

ISO 9001:2000

TUV Rheinland of North America, Inc.

Registered Facility

Distributor:

CAUTION Use rubber gloves during mixing and application. Use goggles during spraying and overhead applications. The effect of Penetron on the skin can be neutralized with a vinegar (household strength) and water solution. PENETRON PRODUCTS ARE NONTOXIC.

While every care is taken to see that the information given in this literature is correct and up to date, it is not intended to form part of any contract or give rise to any collateral liability, which is hereby specifically excluded. Intending purchasers of our materials should, therefore, verify with the company whether any changes in our specification or application details or otherwise have taken place since this literature was issued.

WARRANTY ICS/PENETRON INTERNATIONAL LTD. warrants that the products manufactured by it shall be free from material defects and will conform to formulation standards and contain all components in their proper proportion. Should any of the products be proven defective, the liability to ICS/PENETRON INTERNATIONAL LTD. shall be limited to replacement of the material proven to be defective and shall in no case be liable otherwise or for incidental or consequential damages. ICS/PENETRON INTERNATIONAL LTD. makes no warranty as to merchantability or fitness for a particular purpose and this warranty is in lieu of all other warranties expressed or implied. User shall determine the suitability of the product for his intended use and assume all risks and liability in connection therewith.

ICS/PENETRON INTERNATIONAL LTD.
45 Research Way, Suite 203, East Setauket, New York 11733, U.S.A.
631.941.9700 tel
631.941.9777 fax
sales@penetron.com
www.penetron.com

November 2006 • Technical Manual • Version IX • Part No. P-BR05

Attachment 3.8-96, Supplement 3(Y)
(6 pages)

Crystalline Waterproofing Material
Product Data Sheets

ICS PENETRON INTERNATIONAL 45 Research Way, Suite 203 East Setauket, NY 11733
+1(631) 941-9700 info@penetron.com

PENETRON

DESCRIPTION

Penetron is a surface-applied, integral crystalline waterproofing material, which waterproofs and protects concrete in-depth.

It consists of Portland cement, specially treated quartz sand and a compound of active chemicals. Penetron needs only to be mixed with water prior to application. When Penetron is applied to a concrete surface the active chemicals combine with the free lime and moisture present in the capillary tracts of the concrete to form an insoluble, crystalline structure. These crystals fill the pores and minor shrinkage cracks in the concrete to prevent any further water ingress (even under pressure). However, the Penetron will still allow the passage of vapor through the structure (i.e. the concrete will be able to "breathe"). In addition to waterproofing the structure, Penetron protects concrete against seawater, wastewater, aggressive ground water and many other aggressive chemical solutions. Penetron is approved for use in contact with potable water, and is therefore suitable for use in water storage tanks, reservoirs, water treatment plants...etc. Penetron is not a decorative material.

RECOMMENDED FOR

Penetron integral crystalline waterproofing can be applied to all structurally sound concrete – new or old. It may be applied to either the positive or negative sides of the concrete face.

Typical areas of application are:

- Basement retaining walls
- Parking structures
- Concrete slabs (floor/roof/balcony, etc.)
- Tunnels and subway systems
- Construction joints
- Foundations
- Water retaining structures
- Underground vaults
- Swimming pools
- Sewage and water treatment plants
- Channels
- Reservoirs
- Bridges, etc.

ADVANTAGES

- Becomes an integral part of the concrete, forming a complete body of strength and durability. Penetron should not be confused with a coating or membrane
- Penetrates deeply and seals concrete's capillary tracts and shrinkage cracks
- Can be applied from either the positive or negative side
- Waterproofing and chemical-resistance properties remain intact even if the surface is damaged
- Completely effective against high hydrostatic pressure
- More effective overall and less costly than hydrolitic membrane or clay panel systems
- Easy to apply, labor- cost effective
- Increases concrete's compressive strength
- Cannot come apart at the seams, tear or puncture
- Does not require protection during backfilling, placement of steel or wire mesh, and other common procedures
- Seals hairline and shrinkage cracks of up to 1/64" (0.4 mm) rather than merely masking or bridging them
- Resists chemical attack (pH3-11 constant contact, 2-12 intermittent contact) and provides a range of protection from freeze/thaw cycles, aggressive subsoil waters, sea water, carbonates, chlorides, sulfates and nitrates
- Can be applied to moist or green concrete
- Protects embedded steel (reinforcing steel and wire mesh)
- Nontoxic. Approved for potable water applications (NSF 61)

PACKAGING

This product can be purchased in 50lb (22.7 kg) bags or 55lb (25 kg) pails.

STORAGE

When stored in a dry place unopened, undamaged or original packing, shelf life is 12 months.

DIRECTIONS FOR USE

Consumption:

Water retaining structures, internal concrete wall surfaces: Two coats of Penetron at 1.25-1.5 lb/sy (0.7-0.8 kg/m^2) or one coat at 2.5 - 3 lb/sy (1.4-1.7 kg/m^2) applied with brush or spray.

Construction slabs: Penetron at 2 lb/sy (1.1 kg/m²) applied in one slurry coat to hardened concrete or dry sprinkled and trowel applied to fresh concrete when this has reached initial set.

Construction joints: Penetron at 3 lb/sy (1.7 kg/m²) applied in slurry or dry powder consistency immediately prior to placing the next lift/bay of concrete.

Blinding concrete: Penetron at 2.5 lb/sy (1.4 kg/m²) applied in slurry or dry powder consistency immediately prior to placing the overlying concrete slab.

Surface Preparation:
All concrete to be treated with Penetron integral crystalline waterproofing must be clean and have an "open" capillary system. Remove laitance, dirt, grease, etc. by means of high pressure water jetting, wet sandblasting or wire brushing. Faulty concrete in the form of cracks, honeycombing, etc. must be chased out, treated with Penetron and filled flush with Penetron Mortar. Surfaces must be carefully pre-watered prior to the Penetron application. The concrete surface must be damp but not wet.

Mixing:
Penetron is mechanically mixed with clean water to a creamy consistency or that resembling thick oil. Approximate mixing ratio is 2 parts water to 5 parts Penetron powder (by volume). Mix only as much material as can be used within 20 minutes and stir mixture frequently. If the mixture starts to set do not add more water, simply re-stir to restore workability.

Applying:
Slurry consistency: Apply Penetron in one or two coats according to specification by masonry brush or appropriate power spray equipment. When two coats are specified apply the second coat while the first coat is still "green".

Dry powder consistency: (for horizontal surface only). The specified amount of Penetron is distributed in powder form through a sieve and troweled into the freshly placed concrete once this has reached initial set.

Post treatment: The treated areas should be kept damp for a period of five days and must be protected against direct sun, wind and frost, by covering with polyethythene sheeting, damp burlap or similar.

Note: Do not apply Penetron at temperatures at or below freezing. Penetron cannot be used as an additive to concrete or plasters. (Penetron Admix should be considered for these applications).

TECHNICAL DATA

Aggregate state:	powder
Color:	cement grey
Bulk density:	approx. 1.25kg/l

*All data are averages of several tests under laboratory conditions. In practice, climatic variations such as temperature, humidity, and porosity of substrate may affect these values.

HEALTH AND SAFETY
Penetron contains cement. Irritating to eyes and skin. Penetron may cause sensitization by skin contact. Keep out of reach of children. Avoid contact with skin and eyes. In case of contact with eyes, rinse immediately with plenty of water and seek medical advice. Wear suitable gloves. For further information please refer to Material Safety Data Sheet.

KEEP OUT OF REACH OF CHILDREN.

WARRANTY
ICS PENETRON INTERNATIONAL LTD. warrants that the products manufactured by it shall be free from material defects and will conform to formulation standards and contain all components in their proper proportion. Should any of the products be proven defective, the liability to ICS PENETRON INTERNATIONAL LTD. shall be limited to replacement of the material proven to be defective and shall in no case be liable otherwise or for incidental or consequential damages.

ICS PENETRON INTERNATIONAL LTD. MAKES NO WARRANTY AS TO MERCHANTABILITY OR FITNESS FOR A PARTICULAR PURPOSE AND THIS WARRANTY IS IN LIEU OF ALL OTHER WARRANTIES EXPRESSED OR IMPLIED.

User shall determine the suitability of the product for his intended use and assume all risks and liability in connection therewith.

ICS PENETRON INTERNATIONAL 45 Research Way, Suite 203 East Setauket, NY 11733
+1(631) 941-9700 info@penetron.com

PENETRON PLUS

DESCRIPTION

Penetron Plus is a unique integral crystalline chemical treatment for the waterproofing and protection of concrete. Penetron Plus has been specially formulated for dry-shake applications on horizontal concrete surfaces where greater impact and abrasion resistance is required. Packaged in the form of a dry powder compound, Penetron Plus consists of Portland cement, various active proprietary chemicals, and a synthetic aggregate hardener that has been crushed and graded to particle sizes suitable for concrete floors. Penetron Plus becomes an integral part of the concrete surface thereby eliminating problems normally associated with coatings (e.g. scaling, dusting, flaking and delamination). The active chemicals react with the moisture in the fresh concrete causing a catalytic reaction, which generates a non-soluble crystalline formation within the pores and capillary tracts of the concrete.

RECOMMENDED FOR

- Sewage and Water Treatment Plants
- Traffic Bearing Surfaces
- Warehouse Floors
- Foundation Slabs
- Below-grade
- Parking Structures

ADVANTAGES

- Resists extreme hydrostatic pressure from either positive or negative surface of the concrete slab
- Becomes an integral part of the substrate
- Highly resistant to aggressive chemicals
- Can seal hairline cracks up to 1/64" (0.4mm)
- Allows concrete to breath
- Non-toxic. Approved for use in potable water applications (NSF 61)
- Less costly to apply than most other methods
- Permanent
- Increases flexibility in the construction schedule

PACKAGING

This product can be purchased in 40 lb (18 kg) bags or 55 lb (25 kg) pails.

STORAGE

Penetron products must be stored dry at a minimum temperature of 45°F (7°C). Shelf life is one year when stored under proper conditions.

DIRECTIONS FOR USE

Coverage:

Under normal conditions, the coverage rate for Penetron Plus is 1 lb per sq yard (0.6 kg per m^2), depending on the degree of abrasion resistance required.

NOTE: Under heavy traffic conditions or where even greater abrasion resistance is required, consult a Penetron Technical Representative for a recommendation that meets your specific needs.

Application Procedures:

1. Fresh concrete is placed, consolidated and leveled.
2. Wait until concrete can be walked on leaving an indentation of 1/4"–1/3" (6-9 mm).
   Concrete should be free of bleed water and be able to support the weight of a power trowel. Then, float open the surface.
3. Immediately after floating open the surface, apply one-half of the dry shake material by hand or mechanical spreader. The dry shake material must be spread evenly.
4. As soon as the dry shake material has absorbed moisture from the base slab, it should be power floated to the surface.
5. Immediately after power floating, apply remaining dry shake material at right angles to the first application.
6. Allow remaining dry shake material to absorb moisture from the base slab and then power float the material into the surface.
7. When concrete has hardened sufficiently, power trowel surface to the required finish.

Curing:

Curing is important and should begin as soon as final set has occurred but before surface starts to dry. Conventional moist curing procedures such as water spray, wet burlap or plastic covers may be used. Curing should continue for at least 48 hours. In hot, dry sunny conditions consult manufacturer for specific instructions. In lieu of moist curing, concrete sealers and curing compounds meeting ASTM C-309 may be used.

NOTE: It is common that edges of a slab wall will set up earlier than the main body of concrete. Such edge areas can be dry-shaked and finished with hand tools prior to proceeding with application of the main body of concrete.

For the best results when applying dry shake materials, the air content of the concrete should not exceed 3% (a high air content can make it difficult to achieve a proper application). If a high entrained air content is specified (e.g. for concrete that will be exposed to freezing and thawing), contact the Technical Department of Penetron International Ltd. for further application information.

In hot, dry, or windy conditions, it is advisable to use an evaporation retardant on the fresh concrete surface to prevent premature drying of the slab.

Chronic moving cracks or joints will require a suitable flexible sealant.

For certain concrete mix designs, we recommend a test panel be produced and evaluated for finishing. (For example, high performance concrete with a low water/cement ratio, air entrainment, super plasticizers, or silica fume may reduce bleed water and make the concrete more difficult to finish).

Technical Services:
For more instructions, alternative application methods, or information concerning the compatibility of the Penetron treatment with other products or technologies, contact the Technical Department of Penetron International, Ltd. or your local Penetron representative.

HEALTH AND SAFETY
Penetron Plus is alkaline. As a cementitious powder or mixture, Penetron Plus may cause significant skin and eye irritation. Directions for treating these problems are clearly detailed on all Penetron pails and packaging. Comprehensive and up-to-date Material Safety Data Sheets are maintained on all Penetron products. Each sheet contains health and safety information for the protection of your employees and customers. Contact ICS Penetron International Ltd. or your local Penetron representative to obtain copies of Material Safety Data Sheets prior to product storage or use.

WARRANTY
ICS PENETRON INTERNATIONAL LTD. warrants that the products manufactured by it shall be free from material defects and will conform to formulation standards and contain all components in their proper proportion. Should any of the products be proven defective, the liability to ICS PENETRON INTERNATIONAL LTD. shall be limited to replacement of the material proven to be defective and shall in no case be liable otherwise or for incidental or consequential damages.
ICS PENETRON INTERNATIONAL LTD. MAKES NO WARRANTY AS TO MERCHANTABILITY OR FITNESS FOR A PARTICULAR PURPOSE AND THIS WARRANTY IS IN LIEU OF ALL OTHER WARRANTIES EXPRESSED OR IMPLIED.
User shall determine the suitability of the product for his intended use and assume all risks and liability in connection therewith.

ICS PENETRON INTERNATIONAL 45 Research Way, Suite 203 East Setauket, NY 11733
+1(631) 941-9700 info@penetron.com

PENETRON ADMIX

DESCRIPTION

Penetron Admix (integral crystalline waterproofing admix) is added to the concrete mix at the time of batching. Penetron Admix consists of Portland cement, very fine treated silica sand and various active, proprietary chemicals. These active chemicals react with the moisture in fresh concrete with the by-products of cement hydration to cause a catalytic reaction, which generates a non-soluble crystalline formation throughout the pores and capillary tracts of the concrete. Thus the concrete becomes permanently sealed against the penetration of water or liquids from any direction. The concrete is also protected from deterioration due to harsh environmental conditions.

Note: The Penetron Admix has been specially formulated to meet varying project and temperature conditions (see Setting Time and Strength). Consult with a Penetron Technical Representative for the most appropriate Penetron Admix for your project.

RECOMMENDED FOR

- Reservoirs
- Sewage and Water Treatment Plants
- Secondary Containment Structures
- Tunnels and Subway Systems
- Underground Vaults
- Foundations
- Parking Structures
- Swimming Pools
- Pre-Cast Components

ADVANTAGES

- Resists extreme hydrostatic pressure from either positive or negative surface of the concrete slab
- Becomes an integral part of the substrate
- Highly resistant to aggressive chemicals
- Can seal hairline cracks up to 1/64" (0.4 mm)
- Allows concrete to breathe
- Non-toxic
- Less costly to apply than most other methods
- Permanent
- Added to the concrete at time of batching and therefore is not subject to climatic restraints
- Increases flexibility in construction scheduling

PACKAGING

Penetron Admix is available in 40 lb (18 kg) bags, 55 lb (25 kg) pails.
For large projects, customized packaging is available.

STORAGE

Penetron products must be stored dry at a minimum temperature of 45°F (7°C). Shelf life is one year when stored under proper conditions.

DIRECTIONS FOR USE

Dosage Rate:

Penetron Admix: 0.8% by weight of cement.
Consult with Penetron's Technical Department for assistance in determining the appropriate dosage rate and for further information regarding enhanced chemical resistance, optimum concrete performance, or meeting the specific requirements and conditions of your project.

Mixing:

Penetron Admix must be added to the concrete at the time of batching. THE SEQUENCE OF PROCEDURES FOR ADDITION WILL VARY ACCORDING TO THE TYPE OF BATCH PLANT OPERATION AND EQUIPMENT. FOLLOWING ARE SOME TYPICAL MIXING GUIDELINES.

Ready Mix Plant – Dry Batch Operation: Add Penetron Admix in powder form to the drum of the ready-mix truck. Drive the truck under the batch plant and add 60% - 70% of the required water along with 300-500 lbs (136-227 kg) of aggregate. Mix the materials for 2-3 minutes to ensure the Admix is distributed evenly throughout the mix water. Add the balance of materials to the read-mix truck in accordance with standard batch practices.

Ready Mix Plant - Central Mix Operation: Mix Penetron Admix with water to form a very thin slurry (e.g. 40 lbs (18 kg) of powder mixed with 6 gallons (22.7 l) of water). Pour the required amount of material into the drum of the ready-mix truck. The aggregate, cement and water should be batched and mixed in the plant in accordance with standard practices (taking into account the quantity of water that has already been placed in the ready-mix truck). Pour the concrete into the truck and mix for at least 5 minutes to ensure even distribution of the Penetron Admix throughout the concrete.

Precast Batch Plant: Add Penetron Admix to the rock and sand, then mix thoroughly for 2-3 minutes before adding the cement and water. The total concrete mass should be blended using standard practices.

Note: It is important to obtain a homogeneous mixture of Penetron Admix with the concrete. Therefore, do not add dry Admix powder directly to wet concrete as this may cause clumping and thorough dispersion will not occur.

For further information regarding the proper use of Penetron Admix for a specific project, consult with a Penetron Technical Representative.

Technical Services:
For more instructions, alternative application methods, or information concerning the compatibility of the Penetron treatment with other products or technologies, contact the Technical Department of ICS Penetron International Ltd. or your local Penetron representative.

TECHNICAL DATA

Setting Time And Strength:
The setting time of concrete is affected by the chemical and physical composition of ingredients, temperature of the concrete and climatic conditions. Retardation of set may occur when using Penetron Admix. The amount of retardation will depend upon the concrete mix design and the dosage rate of the Admix. However, under normal conditions, the Admix will provide a normal set concrete. Concrete containing Penetron Admix may develop higher ultimate strengths than plain concrete. Trial mixes should be carried out under project conditions to determine setting time and strength of the concrete.

Limitations:
When incorporating Penetron Admix, the temperature of the concrete mix should be above 40°F (4°C).

HEALTH AND SAFETY

Penetron Admix is alkaline. As a cementitious powder or mixture, Penetron Admix may cause significant skin and eye irritation. Directions for treating these problems are clearly detailed on all Penetron pails and packaging. ICS Penetron International Ltd. also maintains comprehensive and up-to-date Material Safety Data Sheets on all its products. Each sheet contains health and safety information for the protection of your employees and customers. Contact ICS Penetron International, Ltd. or your local Penetron representative to obtain copies of Material Safety Data Sheets prior to product storage or use.

WARRANTY

ICS PENETRON INTERNATIONAL LTD. warrants that the products manufactured by it shall be free from material defects and will conform to formulation standards and contain all components in their proper proportion. Should any of the products be proven defective, the liability to ICS PENETRON INTERNATIONAL LTD. shall be limited to replacement of the material proven to be defective and shall in no case be liable otherwise or for incidental or consequential damages.
ICS PENETRON INTERNATIONAL LTD. MAKES NO WARRANTY AS TO MERCHANTABILITY OR FITNESS FOR A PARTICULAR PURPOSE AND THIS WARRANTY IS IN LIEU OF ALL OTHER WARRANTIES EXPRESSED OR IMPLIED.
User shall determine the suitability of the product for his intended use and assume all risks and liability in connection therewith.

Attachment 3.8-96, Supplement 3(Z)
(4 pages)

Crystalline Waterproofing Material
Specifications

SECTION 07 16 20
CRYSTALLINE WATERPROOFING

PART 1 GENERAL

1.01 SUMMARY

A. Section Includes: Crystalline waterproofing of concrete substrates, above-grade or below-grade, on either dry or wet side of substrates.

1. Applications of crystalline waterproofing of concrete include:

a. Surface Application: Penetron powder applied as slurry coat.

b. Dry Shake Application: Penetron powder applied as dry shake.

c. Admixture: Penetron Admixture included in concrete mix design.

B. Related Sections: Section(s) related to this section include:

1. Division 03 Concrete Sections.

1.02 REFERENCES

A. ASTM International:

1. ASTM C267 Standard Test Methods for Chemical Resistance of Mortars, Grouts, and Monolithic Surfacings and Polymer Concretes.

2. ASTM C672 Standard Test Method for Scaling Resistance of Concrete Surfaces Exposed to Deicing Chemicals.

B. US Army Corps of Engineers (USACE):

1. CRD-C-48-73 Permeability of Concrete.

C. USA Standards:

1. USA Standard No. N69 Protective Coatings for the Nuclear Industry.

1.03 SUBMITTALS

A. General: Submit listed submittals in accordance with Conditions of the Contract and with Division 01 Submittal Procedures Section.

B. Product Data: Submit manufacturer's product data for specified products.

C. Quality Assurance Submittals: Submit the following:

1. Test Reports: Certified test reports showing compliance with specified performance characteristics and physical properties.

2. Certificates: Product certificates signed by manufacturer certifying materials comply with specified performance characteristics and physical requirements.

3. Manufacturer's Instructions: Manufacturer's installation instructions.

1.04 QUALITY ASSURANCE

A. Installer Qualifications: Installer should be experienced (as determined by contractor) to perform work of this section. Installer should be specialized in the installation of work similar to that required for this project, and should be acceptable to product manufacturer.

B. Preinstallation Meetings: Conduct preinstallation meeting to verify project requirements, substrate conditions, manufacturer's installation instructions and manufacturer's warranty requirements. Comply with Division 01 Project Management and Coordination, Project Meetings Section.

1.05 DELIVERY, STORAGE & HANDLING

A. General: Comply with Division 01 Product Requirements Sections.

B. Delivery: Deliver materials in manufacturer's original, unopened, undamaged containers with identification labels intact.

C. Storage and Protection: Store materials protected from exposure to harmful weather conditions and at

temperature conditions recommended by manufacturer.

1. Temperature Conditions: Dry store Penetron products at a minimum temperature of 45 degrees F (7 degrees C).

1.06 PROJECT CONDITIONS

A. Environmental Requirements/Conditions: Substrate and ambient air temperature shall be within range acceptable to the manufacturer.

1.07 WARRANTY

A. Project Warranty: Refer to Conditions of the Contract for project warranty provisions.

1. Warranty Period: Provide a written warranty that all work executed will be free from defects in materials, workmanship and free of leaks for a period of five (5) years from the date of Substantial Completion., unless resulting from structural defects or causes other than the work of this section. Said defects shall be remedied by the applicator for the period of the warranty without additional cost to the owner.

PART 2 PRODUCTS

2.01 CRYSTALLINE WATERPROOFING

A. Acceptable Manufacturer: ICS Penetron International Ltd.

1. Contact: 45 Research Way, Suite 203, East Setauket, New York 11733. Telephone: (631) 941-9700; Fax: (631) 941-9777; E-mail: info@Penetron.com; website: www.Penetron.com.

2. Proprietary Products: Penetron crystalline waterproofing materials:

a. Penetron: Manufacturer's proprietary compound of Portland cement, silica sand and various active chemicals.

b. Penetron Plus: Manufacturer's proprietary compound of Portland cement, silica sand and various active chemicals, formulated as a powder compound for dry shake application.

c. Penecrete Mortar: Manufacturer's proprietary compound of Portland cement, silica sand and various active chemicals, formulated as a crack repair mortar.

d. Peneplug: Manufacturer's proprietary compound of Portland cement, silica sand and various active chemicals, formulated as fast setting plug for active leaks.

e. Penetron Admix: Manufacturer's proprietary compound of Portland cement, silica sand and various active chemicals, formulated as an admixture to be added to fresh concrete at the time of batching.

3. Product(s) Testing:

a. Permeability: USACE CRD-C-48-73 Permeability of Concrete.

b. Chemical Resistance: ASTM C267.

c. Freeze/Thaw and Deicing Chemical Resistance: ASTM C672.

d. Radiation Resistance: Protective Coating for the Nuclear Industry per USA Standard No. N69.

B. Substitutions: No substitutions permitted.

2.02 RELATED MATERIALS

A. Concrete: Refer to Division 03 Concrete for concrete materials and concrete mix design.

2.03 MIXES

A. Mixing: Mix proprietary materials in accordance with manufacturer's instructions, including product data and product technical bulletins.

1. Slurry Coat Mix: Mix Penetron powder with clean water in the following proportions by volume:

a. Brush Application:

1) Coverage: 1.5 lb/yd^2 (0.8 kg/m^2): Mix 5 parts powder to 2 parts water.

2) Coverage: 2.0 lb/yd^2 (1.09 kg/m^2): Mix 3 parts powder to 1 part water.

b. Spray Application:

1) Coverage: 1.5 lb/yd^2 (0.8 kg/m^2): Mix 5 parts powder to 2 parts water. Adjust mix as recommended by manufacturer with spray equipment type used.

2. Dry-Pac Mix: Mix 5 parts Penetron powder with 1 part clean water by volume.

2.04 SOURCE QUALITY

A. Source Quality: Obtain proprietary crystalline waterproofing products from a single manufacturer.

PART 3 EXECUTION

3.01 MANUFACTURER'S INSTRUCTIONS

A. Compliance: Comply with manufacturer's product data, including product technical bulletins, product catalog installation instructions and product carton instructions.

3.02 EXAMINATION

A. Site Verification of Conditions: Verify substrate conditions, which have been previously installed under other sections, are acceptable for product installation in accordance with manufacturer's instructions.

3.03 PREPARATION

A. Surface Preparation: Concrete surfaces to be treated with Penetron shall be clean and free of laitance, dirt film, paint, coatings or other foreign matter harmful to the performance of proprietary products. Surface shall have an open capillary system to provide tooth and suction for Penetron treatment. Where concrete surfaces are too smooth for Penetron treatment, as determined by treatment manufacturer, waterblast, sandblast or acid etch as recommended by manufacturer. The use of curing compounds on concrete to receive Penetron treatment will not be permitted.

1. Defects: Rout out defects, such as cracks, faulty construction joints, honeycombing and other defects to sound concrete, and repair in accordance with Penetron repair procedures manual.

2. Horizontal Surfaces: Prepare horizontal surfaces with a rough wood float or broom finish to receive Penetron treatment.

B. Repair of Surface Defects:

1. Form Tie Holes, Construction Joints, Cracks: Chip defective areas in a "U" shaped slot 3/4 inch - 1 inch (19.1 - 25.4 mm) wide and minimum 1 inch (25.4 mm) deep. Clean slot, saturate with water and remove surface water. Apply slurry coat of Penetron at rate of 1.5 lb/yd^2 (0.8 kg/m^2) to slot. Allow slurry to reach initial set. Fill cavity with Penecrete Mortar. Compress tightly into cavity using pneumatic packer or hammer and blocks. Final coat with Penetron slurry.

2. Rock Pockets, Honeycombing or Other Defective Concrete: Rout out defective areas to sound concrete. Remove loose material and saturate with water. Remove surface water and apply one slurry coat of Penetron. After slurry has set, but while still "green," fill cavity to surface with Penecrete Mortar. Final coat with one coat of Penetron slurry.

3. Coves, Sealing Strips, Control Joints: Prepare concrete joint surfaces by application of 1 coat of Penetron in a slurry form at 2.0 lb/yd^2 (1.09 kg/m^2). Apply Penecrete Mortar while slurry coat is still green, but after slurry coat has reached initial set.

   a. Coves: Trowel apply and pack Penecrete Mortar into a cove shape.

   b. Sealing Strips: Fill preformed grooves, 3/4 inch (19.1 mm) wide and minimum 1 inch (25.4 mm) deep, located at construction joints with Penecrete Mortar. Compact tightly using pneumatic packer or hammer and block.

   c. Expansion Control Joints: Treat expansion joints as a special condition as directed by design professional.

3.04 INSTALLATION

A. Wetting Concrete: Wet concrete surfaces and saturate with clean water to enhance the crystalline formation process within concrete. Remove excess surface water before application of Penetron.

B. Construction Joints: Apply Penetron in slurry form at rate of 2.0 lb/yd^2 (1.09 kg/m^2) to joint surfaces between concrete pours. Moisten joint surfaces prior to slurry application.

C. Surface Application: Apply Penetron treatment uniformly with semi-stiff bristle brush under conditions and application rate recommended by manufacturer. Consult with manufacturer for application when spray equipment is used.

1. 1-Coat Application: Apply Penetron slurry coat at rate and locations indicated.
2. 2-Coat Application: Apply Penetron slurry coat while first coat of Penetron is still green, but after reaching initial set. Use light prewatering between coats when rapid drying conditions occur.

D. Topping Application: Place topping material while waterproofing application is still green, but after reaching initial set. Use light prewatering between coats when rapid drying conditions occur. Cure waterproofing in accordance with manufacturer's instructions prior to topping application.

E. Dry Shake Application: Apply Penetron Plus to fresh horizontal concrete surfaces. Incorporate Penetron powder into surface during concrete finishing process.

1. Application Rate: 1.0 lb/yd^2 (0.5 kg/m^2).

F. Curing: Proper curing of Penetron treatment is essential under hot dry conditions in order to prevent premature evaporation of moisture from the concrete substrate and to aid in the hardening of the Penetron cementitious coating. Cure Penetron using a misty fog spray of clean water after coating has hardened. Avoid damaging the coating through aggressive overspraying. Spray Penetron treated surface 3 times a day for 2 to 3 days. In hot climates, as determined by the manufacturer, spray Penetron treated surfaces at intervals recommended by treatment manufacturer. During curing period, protect treated surfaces from rainfall, frost and puddling of water. Curing is generally not required under normal conditions.

G. Sequence with Other Work: Comply with crystalline waterproofing manufacturer's recommendations for sequencing construction operations after waterproofing applications. Sequence operations to avoid detrimental performance of waterproofing application.

H. Related Products Installation Requirements:

1. Concrete: Refer to Division 03 Concrete Sections.
2. Concrete Topping: Refer to Division 03 Concrete Topping Section.

3.05 FIELD QUALITY REQUIREMENTS

A. Manufacturer's Field Services: Upon Owner's request, provide manufacturer's field service consisting of product use recommendations and periodic site visit for inspection of product installation in accordance with manufacturer's instructions.

3.06 PROTECTION

A. Protection: Protect installed product from damage during construction.

END OF SECTION