10 CFR 50.55a

Progress Energy

Serial: RNP-RA/08-0121

DEC 0 8 2008

United States Nuclear Regulatory Commission
ATTN: Document Control Desk
11555 Rockville Pike
Rockville, Maryland 20852

H. B. ROBINSON STEAM ELECTRIC PLANT, UNIT NO. 2
DOCKET NO. 50-261/LICENSE NO. DPR-23

RESULTS OF MRP-139 INSPECTIONS OF THE REACTOR VESSEL
NOZZLE DISSIMILAR METAL BUTT WELDS DURING REFUELING OUTAGE 25

Ladies and Gentlemen:

The purpose of this letter is for Carolina Power and Light Company, also known as Progress Energy Carolinas, Inc. (PEC), to provide the results of inspections conducted on dissimilar metal butt welds in the reactor vessel nozzles.

The attachment to this letter provides the summary of the inspections and results. The enclosure provided with this letter provides the report WCAP-15621-NP Revision 1 "Handbook on Flaw Evaluation for the H. B. Robinson Unit 2 Reactor Vessel," August 2008.

If you have any questions concerning this matter, please contact Mr. C. A. Castell at (843) 857-1626. There are no new commitments in this letter.

Sincerely,

Curtis A. Castell
Supervisor – Licensing/Regulatory Programs

CAC

Attachment

Enclosure

c: Mr. L. A. Reyes, NRC, Region II
Ms. M. G. Vaaler, NRC, NRR
NRC Resident Inspector

Progress Energy Carolinas, Inc.
Robinson Nuclear Plant
3581 West Entrance Road
Hartsville, SC 29550

A047
NRR

H. B. ROBINSON STEAM ELECTRIC PLANT, UNIT NO. 2

RESULTS OF MRP-139 INSPECTIONS OF THE REACTOR VESSEL NOZZLE DISSIMILAR METAL WELDS DURING REFUELING OUTAGE 25

This report provides a summary of the results of in-service inspections performed on the Reactor Pressure Vessel (RPV) nozzle-to-safe end dissimilar metal (DM) welds during the recently completed Refueling Outage 25 (RO-25) at H. B. Robinson Steam Electric Plant (HBRSEP), Unit No. 2. These inspections identified flaws that exceeded the size limits associated with the American Society of Mechanical Engineers (ASME) Boiler & Pressure Vessel (B&PV) Code, Section XI, Subsection IWB-2500 for pressure retaining dissimilar metal welds in vessel nozzles. The acceptance standards for these welds, as listed on Table IWB-2500-1, are described in Subsection IWB-3514 and Table IWB-3514-2.

The examinations were performed in accordance with the recently issued industry guidance as described in the Materials Reliability Program (MRP) guidelines, MRP-139, Primary System Piping Butt Weld Inspection and Evaluation Guidelines and ASME B&PV Section XI, Appendix VIII. Although, a relief request was approved by the NRC for sizing of flaws using a root mean square error criterion that is greater than that contained in the ASME B&PV Code.

Axially oriented (longitudinal) flaws were detected in, and adjacent to, the Alloy 82/182 welds using Performance Demonstration Initiative (PDI) qualified ultrasonic test (UT) techniques during the RPV nozzle-to-safe end DM weld examinations. These axial flaws were detected in the austenitic stainless steel cladding side, and into the DM weld, in the B inlet (cold leg) nozzle, and in the three outlet (hot leg) nozzle-to-safe end welds.

The following summary of results of these examinations is provided.

Exam Results and Flaw Evaluations

The HBRSEP, Unit No. 2, reactor vessel is a 155-1/2 inch inner diameter (ID), Westinghouse 3-loop pressurized water reactor (PWR). The general assembly is illustrated in Figure 1 which shows the typical coolant loop in the area of the inlet and outlet nozzles. Figure 2 provides the orientation of the six RPV nozzles that were inspected during RO-25. The nozzles are identified by the azimuthal orientation of the nozzle around the circumference of the vessel.

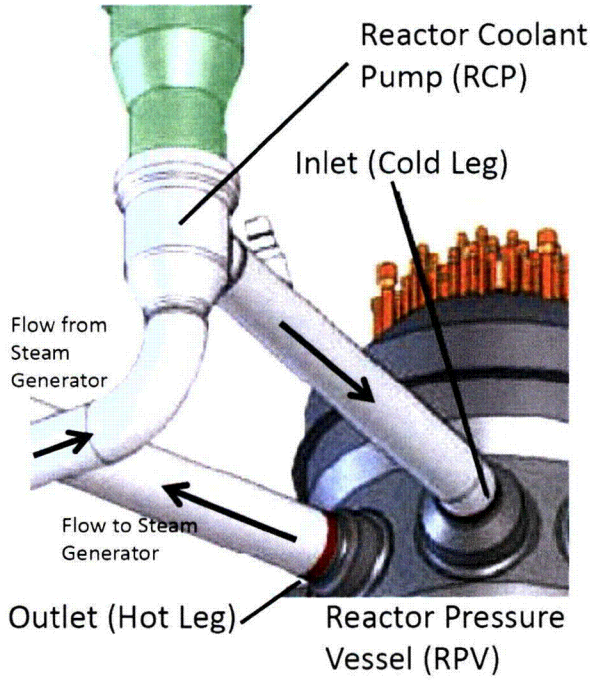

Figure 1 – General Location of RPV Nozzle-to-Safe End DM Butt Welds

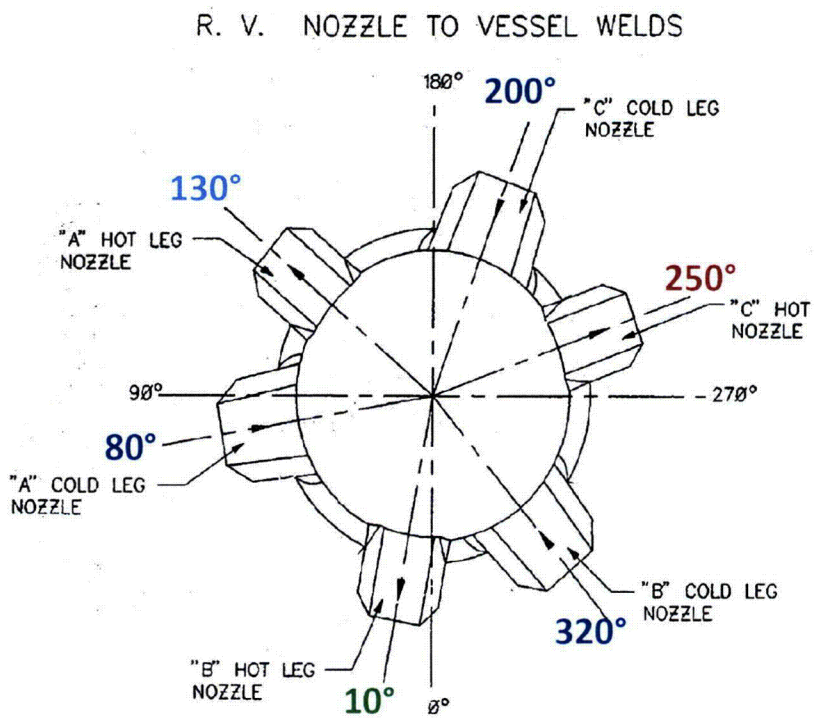

Figure 2 – Orientation of RPV Nozzles at H.B Robinson Unit 2

Inlet Nozzle to Safe End Weld Detail

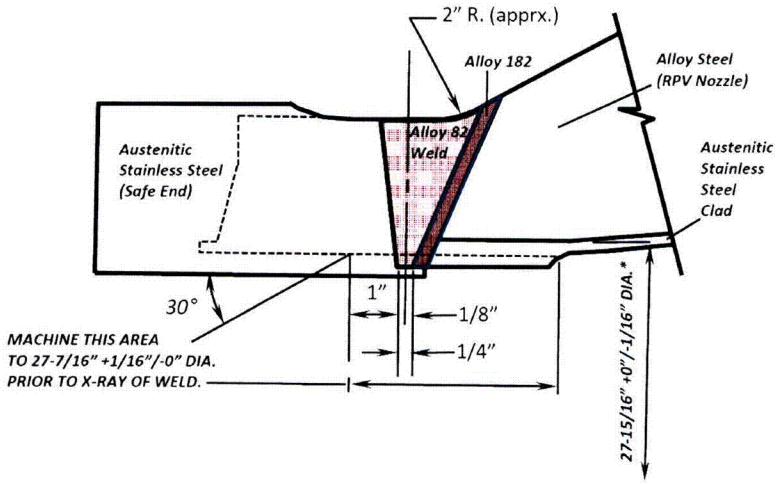

Outlet Nozzle to Safe End Detail

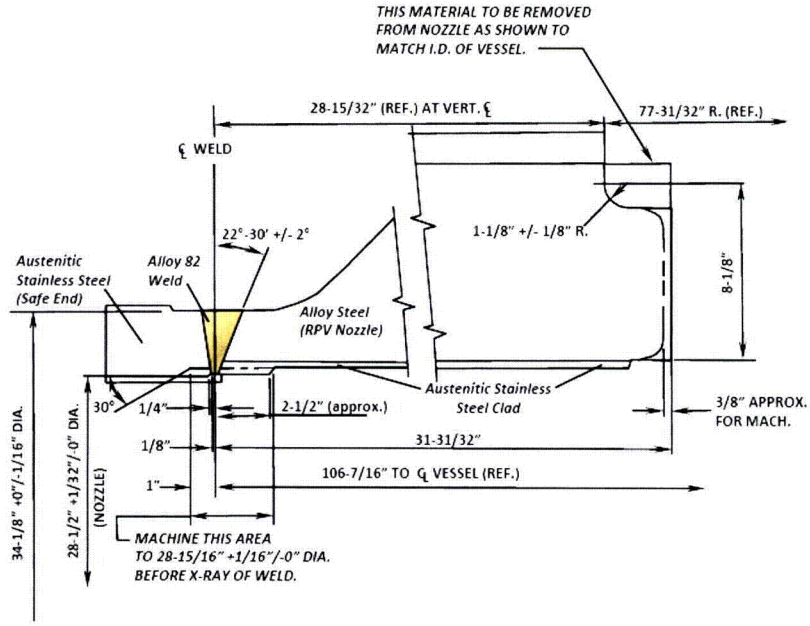

Figure 3 – RPV Nozzle-to-Safe End Weld Details

The nozzle orientations were established during the construction of the vessel. The corresponding loop designations of "A," "B," and "C," were established during plant construction and remain the primary designators for the nozzles. The vessel dissimilar metal weld joints for the inlet (cold leg) and outlet (hot leg) RPV nozzles are shown in Figure 3. The inlet nozzle configuration shows the nozzle side was buttered with alloy 182 weld metal prior to fit-up and welding of the safe end. The outlet nozzle was not buttered. Construction records confirm that the inlet nozzles were originally manufactured for the Malibu vessel in 1964 and the outlet nozzles were forged in 1966 to refit the vessel for HBRSEP, Unit No. 2.

The analyzed wall thicknesses for the weld joints are shown in Figure 4. This configuration agrees with the construction drawings and is specific to the HBRSEP, Unit No. 2, RPV as shown in the RPV stress report. The nozzle material is ASME SA-336, the ID is clad with 304 stainless steel, and the weld joint is buttered with NiCrFe weld metal on the cold leg nozzles. The hot leg nozzles were not buttered with NiCrFe weld metal prior to welding to the safe ends. The safe ends are SA-182 F316 welded to the nozzle using the NiCrFe weld metal. The subsequent machining removed the safe end backing and root pass, resulting in a configuration shown in Figure 4.

Summary of Results from RO-25 Inspection (October 2008)

The results of the RO-25 inspections on the RPV nozzle-to-safe end welds are summarized in Table 1. A total of 32 indications were evaluated under the ASME code requirements of IWB-3500. Of these, 22 were located wholly in the cladding weld metal and are judged to be acceptable per IWB-3510.1. Ten flaws required further evaluation using the Section XI, IWB-3600 methodology.

Table 1 – Summary of Inspections & Results

Nozzle	**Flaw Detection**	**Flaw Sizing Requirements**			**ASME B&PV Code Evaluation**	**WCAP-15621-NP Flaw Evaluation**
NDE Method	**Ultrasonic (UT)**	**Ultrasonic (UT) [Axial Flaws]**	**Ultrasonic (UT) [Circ Flaws]**	**Eddy Current (ECT)**	**Section XI IWB-3500**	**Section XI IWB-3600**
A (Hot Leg) Outlet @ 130°	Flaws Detected	Flaws Sized	**Not Required**	Flaws not ID Connected	**3 Axial Flaws in SS Clad[1]** **1 Axial Flaw in Weld**	**1 Axial Flaw in Weld**
B (Hot Leg) Outlet @ 10°	Flaws Detected	Flaws Sized	**Flaws Sized**	Flaws not ID Connected	**7 Axial Flaws in SS Clad[1]** **4 Axial Flaws in Weld/SE[2]** **3 Circ Flaws in Clad[1]**	**2 Axial Flaws in SE** **2 Axial Flaws in Weld**
C (Hot Leg) Outlet @ 250°	Flaws Detected	Flaws Sized	**Not Required**	Flaws not ID Connected	**4 Axial Flaws in SS Clad[1]** **3 Axial Flaws in Weld** **1 Axial Flaw in SS Safe End**	**3 Axial Flaws in Weld** **1 Axial Flaw in SE**

Table 1 Continues on the next page

Nozzle	Flaw Detection	Flaw Sizing Requirements			ASME B&PV Code Evaluation	WCAP-15621-NP Flaw Evaluation
NDE Method	Ultrasonic (UT)	Ultrasonic (UT) [Axial Flaws]	Ultrasonic (UT) [Circ Flaws]	Eddy Current (ECT)	Section XI IWB-3500	Section XI IWB-3600
A (Cold Leg) Inlet @ 80°	Flaws not Detected	**Not Required**	**Not Required**	**Not Required**	**Not Required**	**Not Required**
B (Cold Leg) Inlet @ 320°	Flaws Detected	Flaws Sized	Flaws Sized	Flaws not ID Connected	**2 Axial Flaws in Weld[3]** **2 Circ Flaws in Clad[1]**	**1 Axial Flaw in Weld**
C (Cold Leg) Inlet @ 200°	Flaws Detected	Flaws Sized	**Not Required**	**Not Required**	**3 Axial Flaws in Clad[1]**	**Not Required**

Note 1: Flaws wholly contained in the cladding do not require IWB-3600 evaluation per IWB-3514.1(d)(1).
Note 2: Two of the 4 axial flaws are located in the SS safe end and evaluated per Table IWB-3514-2, as are the SS weld flaws.
Note 3: Two flaws evaluated as 1 per proximity rules of IWA-3000.

A total of ten (10) axial flaws in the RPV nozzle-to-safe end butt welds were determined to be unacceptable by Table IWB-3514-2, requiring a plant-specific evaluation in accordance IWB-3600. These flaws are listed in Table 2, along with the orientation and sizing information. The analysis considers the flaw shape and location within the wall of the nozzle. The azimuth location is immaterial because the flaw handbook analysis is based on the limiting loads in the nozzles.

According to IWA-3300, "a subsurface indication shall be considered a surface flaw if any portion of the flaw is less than 0.4d from the surface of the component," or, as stated in the flaw handbook, whenever $S > 0.4a$. The limit for a flaw to be considered embedded is:

$$a = 0.714\partial$$

a = depth of surface flaw or half depth of embedded flaw
∂ = distance from embedded flaw centerline to surface

A separation from the ID surface and the 10 flaws listed in Table 2 was observed. However, the procedure was not demonstrated for sizing embedded indications. Thus, due to the close proximity of the embedded flaws and the ID surface, a conservative position was taken to consider all of the flaws as "surface connected." Due to this near surface issue with the methodology, it was considered prudent and conservative to also perform Eddy Current examinations of the indications exceeding IWB-3514 in the three outlet nozzles and the "B" inlet nozzle to ascertain whether or not the flaws were surface connected. The eddy current technology was used as a supplement to the UT results to enhance the evaluation and determine the actual extent of condition. If the flaws are not connected to the surface, they can be classified as fabrication flaws and not primary water stress corrosion cracking (PWSCC).

Flaw Evaluation

The evaluation, provided herein, utilizes the procedure shown in the flaw handbook, WCAP-15620-P, Revision 1, "Handbook on Flaw Evaluation for the H. B. Robinson Unit 2 Reactor Vessel," for each RPV nozzle-to-safe end weld location.

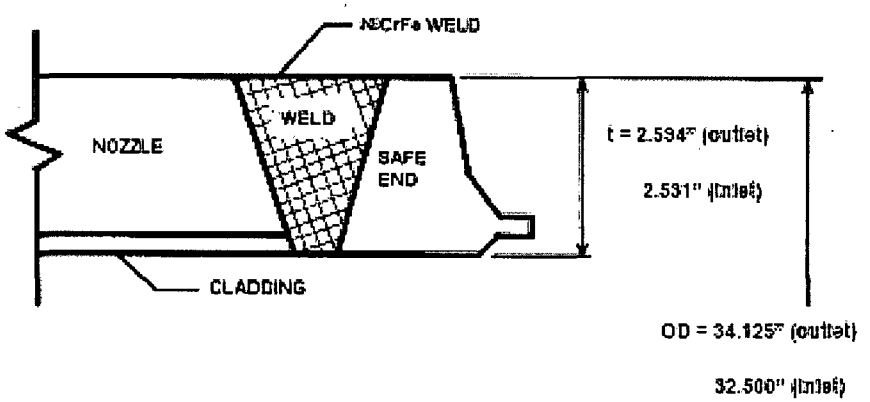

Figure 4 – Analyzed Joint Configuration

Use of the evaluation handbook charts follows the IWB-3600 procedures. The flaws are characterized regarding location, length (l) and depth dimension (a). In accordance with the Flaw Handbook, the Flaw Shape parameter and the Depth-to-Wall Thickness ratio, or Flaw Depth Parameter, are calculated from the flaw depth and length dimensions provided in the inspection records:

Flaw Shape Parameter: a/l
Flaw Depth Parameter: a/t

t = wall thickness of region where indication is located (not including clad thickness)
l = length of indication
a = depth of surface flaw; or half depth of embedded flaw in the crack width direction

Of the 10 flaws being evaluated, one flaw is located in a cold leg, inlet, nozzle and nine are in outlet, hot leg, nozzles. For the cold leg flaw, in a nozzle-to-safe end weld, Figure A-5.4 of the Flaw Handbook is used for disposition. The flaws in the hot leg nozzle to safe end welds are dispositioned using Figure A-8.4 of the handbook.

Each flaw was plotted directly on the applicable charts, using the calculated parameters in Table 2, to determine acceptability. The Flaw Shape parameter for all the axial flaws resulted in a/l > 0.5, and since the aspect ratio for all flaws is limited to a/l = 0.5, each of the flaws plotted on the x-axis is a/l = 0.5 in the charts.
The flaws for A, B, and C hot leg nozzles are plotted on Figure 5. The Maximum Flaw Depth parameter calculated for all the hot leg flaws is 0.1981, which puts all the flaws significantly

below the curve indicating 36 months of service life to reach an unacceptable flaw limit. The Figure 5 curves, for the inside diameter "surface" acceptable flaw limit curves, were developed using a flaw growth analysis, including the requirements for fatigue and PWSCC Crack Growth for Alloy 182/82 in a PWR Environment. This is considered a conservative approach given the eddy current results that no indications were detected on the nozzle ID surface.

The flaw for the B cold leg is plotted in Figure 6. The Flaw Shape parameter also requires that the a/l = 0.5 axis be used. The Flaw Depth parameter for the one cold leg flaw is 0.4957, significantly below the curve indicating 36 months of service life to reach an unacceptable flaw limit. As in Figure 5 for hot leg welds, the Figure 6 curves were also developed using a PWSCC crack growth model, providing a conservative result for a flaw not connected to the ID surface.

Table 2
Summary of Flaw Sizing Results for RPV Nozzle Welds

Nozzle	Flaw ID	**Orientation (Long. or Circ.)**	**Flaw Sizing Results**			**∂ or S**	a/l	a/t
			a (in)[1]	l (in)	t (in)			
B Inlet 320°	21A-1&2	Long.	1.254	1.50	2.53	Surf.	0.836	0.4957
A Outlet 130°	9A-4	Long.	0.356	0.250	2.59	Surf.	1.424	0.1372
B Outlet 10°	1A-8	Long.	0.459	0.350	2.59	Surf.	1.310	0.1769
	1B-1	Long.	0.514	0.400	2.59	Surf.	1.285	0.1981
	1B-2	Long.	0.409	0.450	2.59	Surf.	0.909	0.1577
	1B-3	Long.	0.424	0.450	2.59	Surf.	0.942	0.1635
C Outlet 250°	17A-1	Long.	0.386	0.600	2.59	Surf.	1.554	0.1488
	17A-2	Long.	0.453	0.550	2.59	Surf.	0.824	0.1746
	17B-4	Long.	0.512	0.400	2.59	Surf.	1.280	0.1974
	17B-8	Long.	0.444	0.300	2.59	Surf.	1.480	0.1712

Note 1: Includes 0.087" for depth sizing accuracy as allowed by NRC approved Relief Request approved by letter dated October 22, 2008.

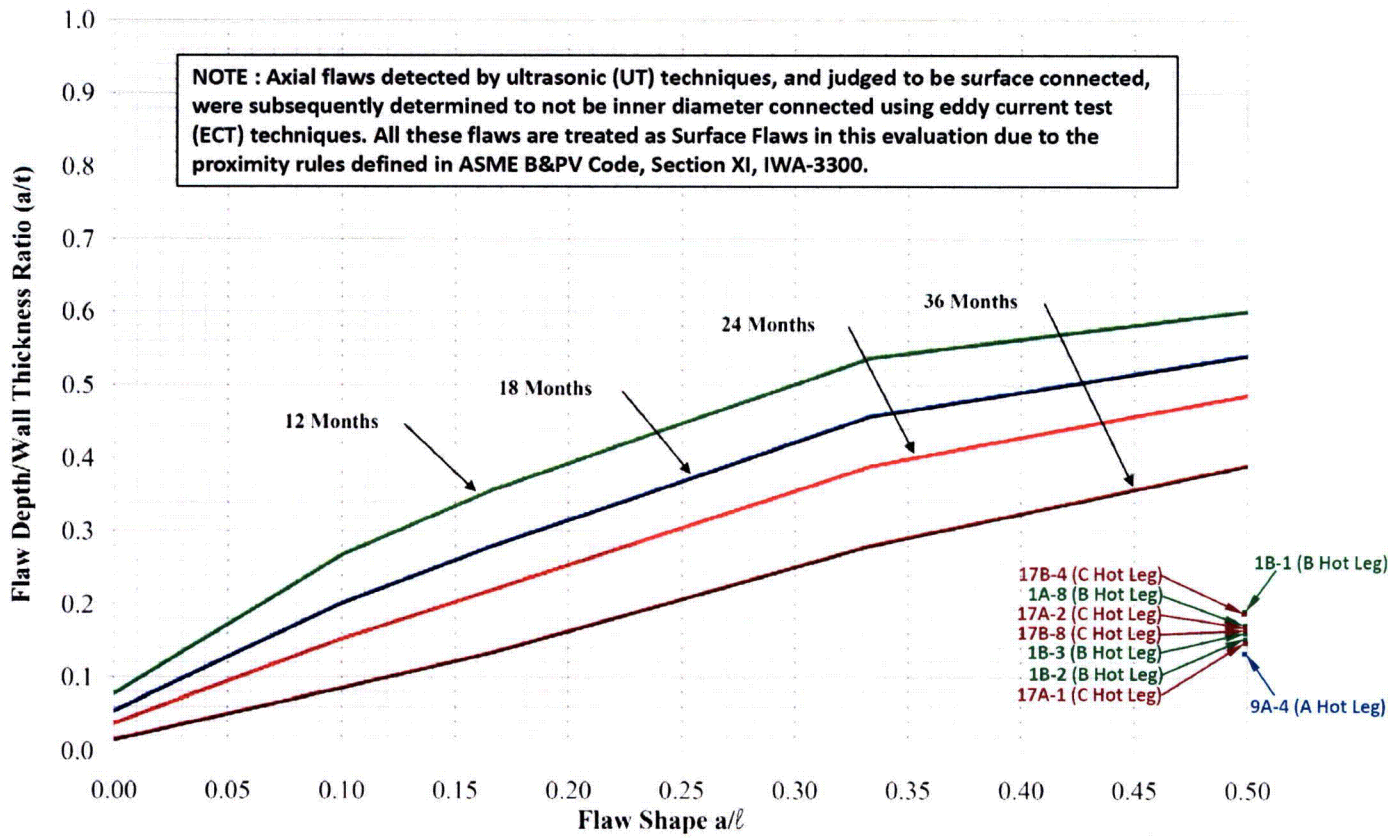

Figure A-8.4 Evaluation Chart for Outlet Nozzle Safe-End to Nozzle Weld (Alloy 82/182)

_X_ Inside Surface _X_ Surface Flaw **(See NOTE above)** _X_ Longitudinal Flaw

Figure 5

Analytical Evaluation of RPV Outlet (Hot Leg) Nozzle Weld Axial Flaws

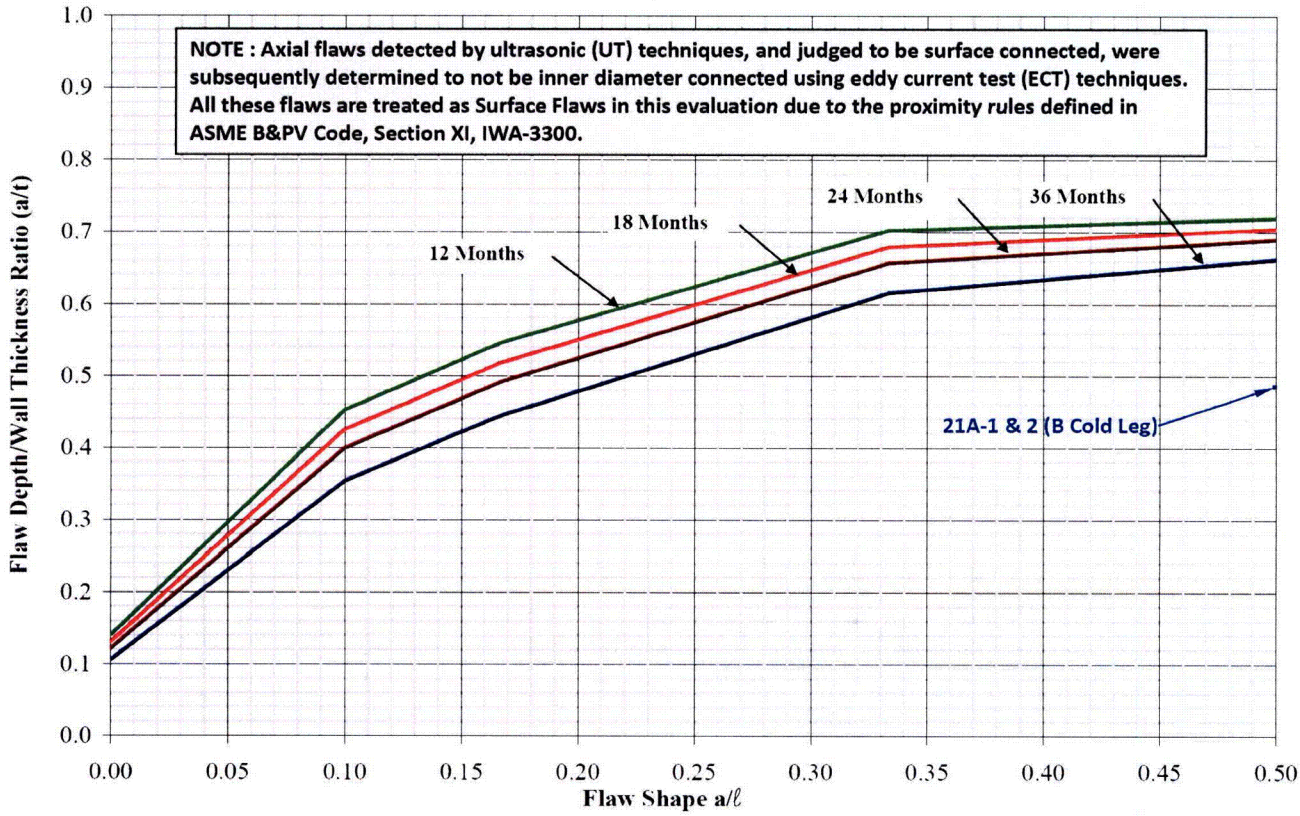

Figure A-5.4 Evaluation Chart for Inlet Nozzle Safe-End to Nozzle Weld (Alloy 82/182)

_X_ Inside Surface _X_ Surface Flaw **(See NOTE above)** _X_ Longitudinal Flaw

Figure 6

Analytical Evaluation of RPV Outlet (Cold Leg) Nozzle Weld Axial Flaw

The WCAP-15621-NP Flaw Handbook provides an ASME B&PV Code Section XI, IWB-3600 analysis specifically for the HBRSEP, Unit No. 2, RPV. The original ASME B&PV Code, Section III, design of the vessel provides margin against failure. The Section XI, IWB-3600 analysis provides a more detailed calculation and maintains the margin consistent with original component design, which is nominally a factor of three on stress for normal and upset operation and a factor of one and a half on stress for emergency and faulted loading conditions. Additional margin is provided in the flaw tolerance calculation by the use of conservative factors such as the use of a higher crack growth value that is higher than the mean value.

The evaluation of the flaws discovered during RO-25 in the RPV nozzle welds has utilized a conservative methodology for sizing, proximity, and analyses to determine acceptability of the flaws without mitigation. In addition to the ASME code margins on allowable flaw size, the Section XI, IWB-3640 flaw evaluations show, in Figures 5 and 6, a factor of about 2 and 1.3, respectively, between the as-found indications and the maximum allowable flaw size.

Eddy Current Testing was applied to the ID of the nozzles and it was determined that the indications identified by UT were not surface connected. The flaws are interpreted to be embedded, not surface connected, and a result of the manufacturing process. Supplementing the examination using eddy current technology, determining that no indications are detected on the inside surface of any nozzle, and, thus, applying the flaw handbook curves for "surface connected" flaws provides additional conservatism. The proximity of the flaws to the surface requires that the analysis be based on "surface connected" flaw curves. These curves are an order of magnitude more conservative than the embedded flaw curves which show substantially longer operating times to allowable flaw size for the same flaw a/t. It is generally accepted in fracture mechanics that "internal," or embedded flaws, are benign or, at least very slow growing. This, combined with having to not consider the stress corrosion component of crack growth, is consistent with the comparison of the "surface" flaw to the embedded flaw curves of the handbook.

Therefore, in applying the Flaw Handbook curves to the data, the axial flaws in the outlet (hot leg) and the B inlet (cold leg) RPV nozzle-to-safe end welds are shown to be acceptable for safe continued operation after RO-25 for at least an additional period of 36 months.

The Flaw Handbook notes that flaws accepted by the analyses contained herein require future monitoring per IWB-2420.