Table of Contents

9.0 Auxiliary Systems 7
9.1 Fuel Storage and Handling 7
9.1.1 Criticality Safety of New and Spent Fuel Storage and Handling 7
9.1.2 New and Spent Fuel Storage 7
9.1.3 Spent Fuel Pool Cooling and Purification System 8
9.1.4 Fuel Handling System 8
9.1.5 Overhead Heavy Load Handling System 8
9.2 Water Systems 11
9.2.1 Essential Service Water System 11
9.2.2 Component Cooling Water System 12
9.2.3 Demineralized Water Distribution System 12
9.2.4 Potable and Sanitary Water Systems (PSWS) 12
9.2.5 Ultimate Heat Sink 17
9.2.6 Condensate Storage Facilities 24
9.2.7 Seal Water Supply System 24
9.2.8 Safety Chilled Water System 24
9.2.9 Raw Water Supply System 24
9.3 Process Auxiliaries 35
9.4 Air Conditioning, Heating, Cooling and Ventilation Systems 35
9.4.1 Main Control Room Air Conditioning System 35
9.4.2 Fuel Building Ventilation System 37
9.4.3 Nuclear Auxiliary Building Ventilation System 37
9.4.4 Turbine Building Ventilation System 37
9.4.5 Safeguard Building Controlled-Area Ventilation System 37
9.4.6 Electrical Division of Safeguard Building Ventilation System (SBVSE) 38
9.4.7 Containment Building Ventilation System 38
9.4.8 Radioactive Waste Building Ventilation System 38
9.4.9 Emergency Power Generating Building Ventilation System 38
9.4.10 Switchgear Building Ventilation System 38
9.4.11 Essential Service Water Pump Building Ventilation System 39
9.4.12 Main Steam and Feedwater Valve Room Ventilation System 42
9.4.13 Smoke Confinement System 42
9.4.14 Access Building Ventilation System 42
9.5 Other Auxiliary Systems 43
9.5.1 Fire Protection System 43
9.5.2 Communication System 59
9.5.3 Lighting System 59
9.5.4 Diesel Generator Fuel Oil Storage and Transfer System 59
9.5.5 Diesel Generator Cooling Water System 60
9.5.6 Diesel Generator Starting Air System 60
9.5.7 Diesel Generator Lubricating System 60
9.5.8 Diesel Generator Air Intake and Exhaust System 60
9.A Fire Protection Analysis 62
9B Fire Protection Analysis - Plant Specific Supplement 65
9B.1 Introduction 65
9B.1.1 Regulatory Bases 65
9B.1.2 Defense-In-Depth 66
9B.1.3 Scope 66
9B.2 Fire Protection Analysis Methodology 67
9B.2.1 General Design Criteria 67
9B.2.2 Specific Elements 68

© 2007 UniStar Nuclear Development, LLC. All rights reserved.
COPYRIGHT PROTECTED

9B.2.3 Assumptions 71
9B.3 Fire Area-by-Fire Area Evaluation 74
9B.3.1 Turbine Building 75
9B.3.2 Switchgear Building 77
9B.3.3 Auxiliary Power Transformer Area 79
9B.3.4 Generator Transformer Area 80
9B.3.5 Warehouse Building 81
9B.3.6 Security Access Facility 82
9B.3.7 Central Gas Supply Building 82
9B.3.8 Grid Systems Control Building 83
9B.3.9 Fire Protection Building 83
9B.3.10 {Circulating Water System Cooling Tower Structure 84
9B.3.11 {Circulating Water System Pump Building 84
9B.3.12 {Ultimate Heat Sink Makeup Water Intake Structure including Associated UHS Electrical Building 84
9B.3.13 {Circulating Water System Makeup Intake Structure 87
9B.3.14 {Desalinization/Water Treatment Building 87
9B.4 References 87

© 2007 UniStar Nuclear Development, LLC. All rights reserved.
COPYRIGHT PROTECTED

List of Tables

Table 9.5-1— Fire Protection Program Compliance with Regulatory Guide 1.189 51
Table 9B-1— Predefined Severities for Common Plant Ignition Source Fires 89
Table 9B-2— Fire Area Parameters 90

© 2007 UniStar Nuclear Development, LLC. All rights reserved.
COPYRIGHT PROTECTED

List of Figures

Figure 9.2-1— {Potable Water System} 28
Figure 9.2-2— {Sanitary Waste Water System} 29
Figure 9.2-3— {Normal Makeup, UHS Makeup, Blowdown & Chemical Treatment} 31
Figure 9.2-4— {General Area - UHS Makeup Water and CW Intake Structures} 32
Figure 9.2-5— {UHS Makeup Water Intake Structure - Plan View} 33
Figure 9.2-6— {UHS Makeup Water Intake Structure - Section View} 34
Figure 9.2-7— {Raw Water and Desalinated Water Supply} 35
Figure 9.4-1— {UHS Makeup Water Intake Structure Ventilation System and UHS Electrical Building Ventilation System} 43
Figure 9.5-1— Fire Protection Organization 61
Figure 9B-1— {CCNPP Unit 3 Fire Barrier Location, Alternate Turbine Building Plan at Elevation (-)23 Feet} 106
Figure 9B-2— {CCNPP Unit 3 Fire Barrier Location, Alternate Turbine Building Plan at Elevation +/- 0 Feet} 107
Figure 9B-3— {CCNPP Unit 3 Fire Barrier Location, Alternate Turbine Building Plan at Elevation +38 Feet} 108
Figure 9B-4— {CCNPP Unit 3 Fire Barrier Location, Alternate Turbine Building Plan at Elevation +65 Feet} 109
Figure 9B-5— {CCNPP Unit 3 Fire Barrier Location, Alternate Turbine Building Plan at Elevation (-)43 Feet} 110
Figure 9B-6— {CCNPP Unit 3 Fire Barrier Location, Alternate Turbine Building Roof Plan} 111
Figure 9B-7— {CCNPP Unit 3 Fire Barrier Location, Alternate Turbine Building Section A-A} 112
Figure 9B-8— {CCNPP Unit 3 Fire Barrier Location, Alternate Turbine Building Section B-B} 113
Figure 9B-9— {CCNPP Unit 3 Fire Barrier Location, Alternate Turbine Building Section C-C} 114
Figure 9B-10— {CCNPP Unit 3 Fire Barrier Location, SWGR/SBO Buildings Plan View at Elevation (-)13'-0"} 115
Figure 9B-11— {CCNPP Unit 3 Fire Barrier Location, SWGR/SBO/AUX BLR Buildings Plan View at Elevation 0'-0"} 116
Figure 9B-12— {CCNPP Unit 3 Fire Barrier Location, SWGR/SBO/AUX BLR Buildings Plan View at Elevation 13'-0"} 117
Figure 9B-13— {CCNPP Unit 3 Fire Barrier Location, SWGR/SBO/AUX BLR Buildings Plan View at Elevation 24'-6"} 118
Figure 9B-14— {CCNPP Unit 3 Fire Barrier Location, SWGR/SBO/AUX BLR Buildings, Plan View Section A-A} 119
Figure 9B-15— {CCNPP Unit 3 Fire Barrier Location, Transformer Area Plan View at Elevation 0'-0" } 120
Figure 9B-16— {CCNPP Unit 3 Fire Barrier Location, Warehouse Building Plan View at Elevation 85'-0"} 121
Figure 9B-17— {CCNPP Unit 3 Fire Barrier Location, Security Access Facility Plan View at Elevation 85'-0"} 122
Figure 9B-18— {CCNPP Unit 3 Fire Barrier Location, Central Gas Supply Building Plan View at Elevation 85'0"} 123
Figure 9B-19— {CCNPP Unit 3 Fire Barrier Location, Grid Systems Control Building Plan View at Elevation 85'0"} 124
Figure 9B-20— {CCNPP Unit 3 Fire Barrier Location, Fire Protection Building Plan View at Elevation 85'0"} 125

© 2007 UniStar Nuclear Development, LLC. All rights reserved.
COPYRIGHT PROTECTED

Figure 9B-21— {CCNPP Unit 3 Fire Barrier Location, Cooling Tower Structure, Plan View and Section A-A} 126
Figure 9B-22— {CCNPP Unit 3 Fire Barrier Location, Circulating Water Pump Building, Plan View and Section A-A} 127
Figure 9B-23— {CCNPP Unit 3 Fire Barrier Location, UHS Makeup Water Intake Structure, Plan View and Section A-A} 128
Figure 9B-24— {CCNPP Unit 3 Fire Barrier Location, CW Makeup IntakeStructure, Plan View and Section A-A} 129
Figure 9B-25— {CCNPP Unit 3 Fire Barrier Location, Desalinization / Water Treatment Building Plan View at Elevation 100'0"} 130
Figure 9B-1— {CCNPP Unit 3 Fire Barrier Location, Alternate Turbine Building Plan at Elevation (-)23 Feet} 133
Figure 9B-2— {CCNPP Unit 3 Fire Barrier Location, Alternate Turbine Building Plan at Elevation +/- 0 Feet} 134
Figure 9B-3— {CCNPP Unit 3 Fire Barrier Location, Alternate Turbine Building Plan at Elevation +38 Feet} 135
Figure 9B-4— {CCNPP Unit 3 Fire Barrier Location, Alternate Turbine Building Plan at Elevation +65 Feet} 136
Figure 9B-5— {CCNPP Unit 3 Fire Barrier Location, Alternate Turbine Building Plan at Elevation (-)43 Feet} 137
Figure 9B-6— {CCNPP Unit 3 Fire Barrier Location, Alternate Turbine Building Roof Plan} . . 138
Figure 9B-7— {CCNPP Unit 3 Fire Barrier Location, Alternate Turbine Building Section A-A} 139
Figure 9B-8— {CCNPP Unit 3 Fire Barrier Location, Alternate Turbine Building Section B-B} . 140
Figure 9B-9— {CCNPP Unit 3 Fire Barrier Location, Alternate Turbine Building Section C-C} 141
Figure 9B-10— {CCNPP Unit 3 Fire Barrier Location, SWGR/SBO Buildings Plan View at Elevation (-)13'-0"} 142
Figure 9B-11— {CCNPP Unit 3 Fire Barrier Location, SWGR/SBO/AUX BLR Buildings Plan View at Elevation 0'-0"} 143
Figure 9B-12— {CCNPP Unit 3 Fire Barrier Location, SWGR/SBO/AUX BLR Buildings Plan View at Elevation 13'-0"} 144
Figure 9B-13— {CCNPP Unit 3 Fire Barrier Location, SWGR/SBO/AUX BLR Buildings Plan View at Elevation 24'-6"} 145
Figure 9B-14— {CCNPP Unit 3 Fire Barrier Location, SWGR/SBO/AUX BLR Buildings, Plan View Section A-A} 146
Figure 9B-15— {CCNPP Unit 3 Fire Barrier Location, Transformer Area Plan View at Elevation 0'-0" } 147
Figure 9B-16— {CCNPP Unit 3 Fire Barrier Location, Warehouse Building Plan View at Elevation 85'-0"} 148
Figure 9B-17— {CCNPP Unit 3 Fire Barrier Location, Security Access Facility Plan View at Elevation 85'-0"} 149
Figure 9B-18— {CCNPP Unit 3 Fire Barrier Location, Central Gas Supply Building Plan View at Elevation 85'0"} 150
Figure 9B-19— {CCNPP Unit 3 Fire Barrier Location, Grid Systems Control Building Plan View at Elevation 85'0"} 151
Figure 9B-20— {CCNPP Unit 3 Fire Barrier Location, Fire Protection Building Plan View at Elevation 85'0"} 152
Figure 9B-21— {CCNPP Unit 3 Fire Barrier Location, Cooling Tower Structure, Plan View and Section A-A} 153

© 2007 UniStar Nuclear Development, LLC. All rights reserved.
COPYRIGHT PROTECTED

Figure 9B-22— {CCNPP Unit 3 Fire Barrier Location, Circulating Water Pump Building, Plan View and Section A-A} 154
Figure 9B-23— {CCNPP Unit 3 Fire Barrier Location, UHS Makeup Water Intake Structure, Plan View and Section A-A} 155
Figure 9B-24— {CCNPP Unit 3 Fire Barrier Location, CW Makeup IntakeStructure, Plan View and Section A-A} 156
Figure 9B-25— {CCNPP Unit 3 Fire Barrier Location, Desalinization / Water Treatment Building Plan View at Elevation 100'0"} 157

© 2007 UniStar Nuclear Development, LLC. All rights reserved.
COPYRIGHT PROTECTED

9.0 AUXILIARY SYSTEMS

This chapter of the U.S. EPR Final Safety Analysis Report (FSAR) is incorporated by reference with supplements as identified in the following sections.

9.1 FUEL STORAGE AND HANDLING

This section of the U.S. EPR FSAR is incorporated by reference with the following supplements.

9.1.1 CRITICALITY SAFETY OF NEW AND SPENT FUEL STORAGE AND HANDLING

9.1.1.1 Design Bases

No departures or supplements.

9.1.1.2 Facilities Description

No departures or supplements.

9.1.1.3 Safety Evaluation

The U. S. EPR FSAR includes the following COL Item in Section 9.1.1.3:

> A COL applicant that references the U.S. EPR design certification will demonstrate that the design satisfies the criticality analysis requirements for the new and spent fuel storage racks, and describe the results of the analyses for normal and credible abnormal conditions, including a description of the methods used, approximations and assumptions made, and handling of design tolerances and uncertainties.

This COL Item is addressed as follows:

~~The design and analyses for the new and spent fuel storage racks is provided in UniStar Topical Report UN-TR-08-001, Spent and New Fuel Storage Analyses for U.S. EPR Topical Report, dated March 2008 (UniStar, 2008).~~ The design and analyses for the new and spent fuel storage racks will be incorporated into Revision 1 to the U.S. EPR FSAR. This revision will include the analyses in UniStar Topical Report UN-TR-08-001, Spent and New Fuel Storage Analyses for U.S. EPR Topical Report, dated March 2008 (UniStar, 2008) and incorporate additional analyses to bound the site specific conditions at {CCNPP Unit 3}.

9.1.1.4 References

{**UniStar, 2008**. Spent and New Fuel Storage Analyses for U. S. EPR Topical Report, UniStar Topical Report UN-TR-08-001, March 2008.}

9.1.2 NEW AND SPENT FUEL STORAGE

No departures or supplements.

9.1.2.1 Design Bases

No departures or supplements.

© 2007 UniStar Nuclear Development, LLC. All rights reserved.
COPYRIGHT PROTECTED

9.1.2.2 Facilities Description

9.1.2.2.1 New Fuel Storage

The U. S. EPR FSAR includes the following COL Item in Section 9.1.2.2.1:

> A COL applicant that references the U.S. EPR design certification will describe the new fuel storage racks, including a description of confirmatory structural dynamic and stress analyses.

This COL Item is addressed as follows:

~~The design and analyses for the new and spent fuel storage racks is provided in UniStar Topical Report UN-TR-08-001, Spent and New Fuel Storage Analyses for U.S. EPR Topical Report, dated March 2008 (UniStar, 2008).~~ The design and analyses for the new and spent fuel storage racks will be incorporated into Revision 1 to the U.S. EPR FSAR. This revision will include the analyses in UniStar Topical Report UN-TR-08-001, Spent and New Fuel Storage Analyses for U.S. EPR Topical Report, dated March 2008 (UniStar, 2008) and incorporate additional analyses to bound the site specific conditions at {CCNPP Unit 3}.

9.1.2.2.2 Spent Fuel Storage

The U. S. EPR FSAR includes the following COL Item in Section 9.1.2.2.2:

> A COL applicant that references the U.S. EPR design certification will describe the spent fuel storage racks, including a description of confirmatory structural dynamic and stress analyses and thermal-hydraulic cooling analyses.

This COL Item is addressed as follows:

~~The design and analyses for the new and spent fuel storage racks is provided in UniStar Topical Report UN-TR-08-001, Spent and New Fuel Storage Analyses for U.S. EPR Topical Report, dated March 2008 (UniStar, 2008).~~The design and analyses for the new and spent fuel storage racks will be incorporated into Revision 1 to the U.S. EPR FSAR. This revision will include the analyses in UniStar Topical Report UN-TR-08-001, Spent and New Fuel Storage Analyses for U.S. EPR Topical Report, dated March 2008 (UniStar, 2008) and incorporate additional analyses to bound the site specific conditions at {CCNPP Unit 3}.

9.1.2.3 Safety Evaluation

No departures or supplements.

9.1.2.4 Inspection and Testing Requirements

No departures or supplements.

9.1.2.5 Instrumentation Requirements

No departures or supplements.

9.1.2.6 References

{**UniStar, 2008**. Spent and New Fuel Storage Analyses for U. S. EPR Topical Report, UniStar Topical Report UN-TR-08-001, March 2008.}

© 2007 UniStar Nuclear Development, LLC. All rights reserved.
COPYRIGHT PROTECTED

9.1.3 SPENT FUEL POOL COOLING AND PURIFICATION SYSTEM

No departures or supplements.

9.1.4 FUEL HANDLING SYSTEM

No departures or supplements.

9.1.5 OVERHEAD HEAVY LOAD HANDLING SYSTEM

No departures or supplements.

9.1.5.1 Design Basis

No departures or supplements.

9.1.5.2 System Description

9.1.5.2.1 General Description

No departures or supplements.

9.1.5.2.2 Reactor Building Polar Crane

No departures or supplements.

9.1.5.2.3 Fuel Building Auxiliary Crane

No departures or supplements.

9.1.5.2.4 Other Overhead Load Handling Systems

No departures or supplements.

9.1.5.2.5 System Operation

The U. S. EPR FSAR includes the following COL Item in Section 9.1.5.2.5:

> A COL applicant that references the U.S. EPR design certification will provide site-specific information on the heavy load handling program, including a commitment to procedures for heavy load lifts in the vicinity of irradiated fuel or safe shutdown equipment, and crane operator training and qualification.

This COL item is addressed as follows:

Procedures

Administrative procedures to control heavy loads shall be developed prior to fuel load to allow sufficient time for plant staff familiarization, to allow NRC staff adequate time to review the procedures, and to develop operator licensing examinations. Heavy loads handling procedures address the following:

- Equipment identification.
- Required equipment inspections and acceptance criteria prior to performing lift and movement operations.
- Approved safe load paths and exclusion areas.

© 2007 UniStar Nuclear Development, LLC. All rights reserved.
COPYRIGHT PROTECTED

- Safety precautions and limitations.
- Special tools, rigging hardware, and equipment required for the heavy load lift.
- Rigging arrangement for the load.
- Adequate job steps and proper sequence for handling the load.

Safe load paths are defined for movement of heavy loads to minimize the potential for a load drop on irradiated fuel in the reactor vessel or spent fuel pool or on safe shutdown equipment. Paths are defined in procedures and equipment layout drawings. Safe load path procedures address the following general requirements.

- When heavy loads must be carried directly over the spent fuel pool, reactor vessel or safe shutdown equipment, procedures will limit the height of the load and the time the load is carried.
- When heavy loads could be carried (i.e., no physical means to prevent) but are not required to be carried directly over the spent fuel pool, reactor vessel or safe shutdown equipment, procedures will define an area over which loads shall not be carried so that if the load is dropped, it will not result in damage to spent fuel or operable safe shutdown equipment or compromise reactor vessel integrity.
- Where intervening structures are shown to provide protection, no load travel path is required.
- Defined safe load paths will follow, to the extent practical, structural floor members.
- When heavy loads movement is restricted by design or operational limitation, no safe load path is required.
- Supervision is present during heavy load lifts to enforce procedural requirements.

Inspection and Testing

Cranes addressed in U.S. EPR FSAR Section 9.1.5 are inspected, tested, and maintained in accordance with ASME B30.2 (ASME, 2005), with the exception that tests and inspections may be performed prior to use for infrequently used cranes. Prior to making a heavy load lift, an inspection of the crane is made in accordance with the above applicable standards.

Training and Qualification

Training and qualification of operators of cranes addressed in U.S. EPR FSAR Section 9.1.5 meet the requirements of ASME B30.2 (ASME, 2005), and include the following:

- Knowledge testing of the crane to be operated in accordance with the applicable ANSI crane standard.
- Practical testing for the type of crane to be operated.
- Supervisor signatory authority on the practical operating examination.
- Applicable physical requirements for crane operators as defined in the applicable crane standard.

© 2007 UniStar Nuclear Development, LLC. All rights reserved.
COPYRIGHT PROTECTED

Quality Assurance

Procedures for control of heavy loads are developed in accordance with Section 13.5. In accordance with Section 17.5, other specific quality program controls are applied to the heavy loads handling program, targeted at those characteristics or critical attributes that render the equipment a significant contributor to plant safety.

9.1.5.3 Safety Evaluation

No departures or supplements.

9.1.5.4 Inspection and Testing Requirements

No departures or supplements.

9.1.5.5 Instrumentation Requirements

No departures or supplements.

9.1.5.6 References

{**ASME, 2005**. Overhead and Gantry Cranes – Top Running Bridge, Single or Multiple Girder, Top Running Trolley Hoist, ASME B30.2, American Society of Mechanical Engineers, 2005.}

9.2 WATER SYSTEMS

This section of the U.S. EPR FSAR is incorporated by reference with the following supplements.

9.2.1 ESSENTIAL SERVICE WATER SYSTEM

No departures or supplements.

9.2.1.1 Design Bases

{The temperatures in U.S. EPR FSAR Tables 2.1-3 and 2.1-4 envelope the temperature data for the Calvert Cliffs Site and are described below.

The CCNPP Unit 3 site-specific wet and dry bulb temperatures were determined using the guidance of Regulatory Guide 1.27 (NRC, 1976) and 30 years of climatology data (1976-2006) from Patuxent River Naval Air Station, just south of the site. The data analysis yielded a maximum calculated wet bulb temperature, when applying a 0% exceedance criterion, of 85° F (29° C) with a coincident dry bulb temperature of 99° F (37° C). The 0% exceedance criterion means that the wet bulb temperature does not exceed the 0% exceedance value for more than two consecutive data occurrences, and the Patuxent River data was recorded hourly.

The Essential Service Water System (ESWS) cooling towers for CCNPP Unit 3 are designed in accordance with Regulatory Guide 1.27 guidance and the requirements of U.S. EPR FSAR Table 2.1-1. The tower size is thus based on a wet bulb temperature of 81° F (27° C) with a coincident 115° F (46° C) dry bulb temperature. The wet bulb temperature includes a 1° F (0.5° C) addition for "interference" due to each pair of ESWS towers' close proximity to each other.

The higher wet bulb temperature of 85° F (29° C) is the controlling factor for establishing the tower basin water temperature because of the more limited ability of the ambient air to absorb heat energy in moving through the tower. Alternatively, the higher difference between wet and coincident dry bulb temperatures (81° F (27° C) wet bulb coincident with 115° F (46° C) dry bulb) indicates lower humidity and resultant higher evaporation rate, thus making this the

© 2007 UniStar Nuclear Development, LLC. All rights reserved.
COPYRIGHT PROTECTED

controlling factor for determining both makeup water demand and required tower basin water volume. In applying these factors to CCNPP Unit 3, the resulting maximum ESWS tower basin water temperature is less than the 95° F (35° C) worst-case design basis for the ESWS and the Component Cooling Water System (CCWS) heat exchangers. Based on the analysis of the Ultimate Heat Sink (UHS) System with local meteorological data, it has been determined that the maximum ESWS supply temperature is less than 95° F (35° C) and the maximum evaporative loss from a UHS cooling tower is 571 gpm (2160 lpm), during design basis accident conditions, as described in U.S. EPR FSAR Table 2.1-1. }

9.2.1.2 System Description

No departures or supplements.

9.2.1.3 Component Description

No departures or supplements.

9.2.1.4 Operation

No departures or supplements.

9.2.1.5 Safety Evaluation

{No departures or supplements.}

9.2.1.6 Inspection and Testing Requirements

No departures or supplements.

9.2.1.7 Instrumentation Requirements

No departures or supplements.

9.2.1.8 References

- {NRC, 1976. Ultimate Heat Sink for Nuclear Power Plants (for Comment), Regulatory Guide 1.27, Revision 2, U. S. Nuclear Regulatory Commission, January 1976.}

9.2.2 COMPONENT COOLING WATER SYSTEM

No departures or supplements.

9.2.3 DEMINERALIZED WATER DISTRIBUTION SYSTEM

No departures or supplements.

9.2.4 POTABLE AND SANITARY WATER SYSTEMS (PSWS)

{The U.S. EPR FSAR describes the Potable and Sanitary Water System as a single system. While the function will remain the same, CCNPP Unit 3 classifies the system as two systems: the Potable Water System; and the Sanitary Waste Water System.

The Potable Water System delivers drinking quality water to various points throughout the plant, to individual components and for use as process water in other systems. Potable water is used for human consumption, sanitation and cleaning, and other domestic and process purposes inside the Nuclear Island (NI) and the Conventional Island (CI).

© 2007 UniStar Nuclear Development, LLC. All rights reserved.
COPYRIGHT PROTECTED

The Sanitary Waste Water System collects water discharged from water closets, urinals, showers, sinks and other sources of sanitary water and, with the exception of that from sources within the radiologically controlled area (RCA), directs it via the domestic waste water collection system through the sewage treatment plant for processing. The sanitary water from sources within the RCA is directed to the Liquid Radwaste System by the NI vents and drains.}

9.2.4.1 Design Basis

{The Potable Water System supplies potable water for human consumption, cleaning and other domestic purposes, plus process water to other systems, during periods of normal operation, shutdown, maintenance and construction. The Potable Water System provides potable water at a flow rate sufficient to meet demand and keep potable water pressure above connected equipment's or systems' pressures. Potable water supplied to, and equipment provided for, emergency eyewash stations and emergency showers complies with the requirements of ANSI Z358.1, Emergency Eyewash and Shower Equipment (ANSI, 2004).

The Sanitary Waste Water System conveys sanitary wastes from their point of origin, and provides necessary treatment of the non-radiologically contaminated waste water, during periods of normal operation, shutdown, maintenance and construction. Where piping for the Sanitary Waste Water System is buried, provisions are made to assure adequate separation from Potable Water System piping. Where local conditions prevent this separation, controls on layout and installation provide similar assurance of protection of potable water from contamination.}

9.2.4.2 System Description

9.2.4.2.1 General Description

The U.S. EPR FSAR includes the following COL Item in Section 9.2.4.2.1:

> A COL applicant that references the U.S. EPR design certification will provide site-specific details related to the sources and treatment of makeup to the PSWS along with a simplified piping and instrumentation diagram.

This COL Item is addressed as follows:

{Potable Water System

The Potable Water System is shown schematically in Figure 9.2-1. It provides potable-grade water throughout the plant, for human consumption, cleaning and sanitation, and other domestic and selected process purposes. The Potable Water System supplies water that meets the requirements of local, state and federal codes and specifications regarding potability. The system is designed to satisfy peak anticipated demand for potable water, including hot water, during all phases of plant operation.

The Potable Water System consists of treatment of incoming water from the desalinization plant for potability, a potable water storage tank, pressure maintenance pumps, distribution piping and valves, water heaters, and electrical components and instrumentation for system monitoring, operation and control.

Clean water is supplied to the system from the desalinization plant, with the water passing through physical and/or chemical treatment to ensure its potability prior to its entry into the potable water storage tank (or the system if the storage tank is being bypassed). The potability

© 2007 UniStar Nuclear Development, LLC. All rights reserved.
COPYRIGHT PROTECTED

treatment can be bypassed for maintenance, provided appropriate condition of the supply/ makeup water from the desalinization plant is confirmed.

Sanitary Waste Water System

The Sanitary Waste Water System is shown schematically in Figure 9.2-2.

Sanitary waste water or sanitary water is the term applied to the drainage from water closets, urinals, showers, bathroom/washroom sinks, kitchen and janitorial sinks, clothes washing and dish washing machines. Sanitary waste loading usually includes biological waste (including fecal matter), soaps, cooking grease and food scraps. However, at the CCNPP Unit 3, the sanitary waste stream is processed in two different ways depending on the source, due to differing contaminants.

The following locations within the NI have sanitary waste streams that have the potential to contain radioactive material. However, because these particular waste streams do not contain biological waste, cooking grease or food scraps, it is acceptable to collect them in the NI vents and drains system and direct them to the Liquid Waste Management System for processing as potentially radioactive waste:

- Personnel decon showers and decon sinks in the Access Building.
- Contaminated laundry facility in the Radioactive Waste Processing Building.

U.S. EPR FSAR Section 9.3.3 provides a discussion of the NI vents and drains system. The Liquid Waste Management System is discussed in U.S. EPR FSAR Section 11.2.

The following locations within the NI have sanitary waste water streams that are directed to the Waste Water Treatment Facility, because they have no connections to systems with the potential to carry radioactive materials:

- Water closets, urinals, hand wash sinks and personnel showers in the following areas:
  - Non-radiologically controlled area (non-RCA) in the Access Building.
  - Non-RCA in the Safeguards Buildings.
- Sink and dishwasher in the kitchen in Safeguards Building 2.
- Hand wash sinks in the Emergency Power Generating Buildings 1 through 4.

The waste stream from each of these locations/components is collected by the Sanitary Waste Water System and flows to collection pits or tanks, from which it drains by gravity to the Waste Water Treatment Facility.

The Waste Water Treatment Facility takes sanitary waste water and puts it through a process of mechanical, biological and chemical processing to prepare it for discharge and disposal. The primary driver of the process is aerobic microbes that digest the sewage. Filtration and dewatering of solid material and separation of emulsified oil is followed by disinfection. The liquid effluent is then discharged through the seal well and discharge structure to the Chesapeake Bay. Dewatered sludge (solids) is transported offsite for disposal at a municipal landfill.}

© 2007 UniStar Nuclear Development, LLC. All rights reserved.
COPYRIGHT PROTECTED

9.2.4.2.2 Component Description

{Potable Water System

Desalinization Plant

Clean water is supplied to the Potable Water System from the desalinization plant.

Potable Water Storage Tank

The potable water storage tank has a usable volume sufficient to accommodate demand surges during peak periods of potable water usage. It is equipped with isolable inlet and outlet lines, an overflow line and a vent, as well as instrumentation for level control, indication and alarm functions. A bypass line is provided so that supply water can bypass the storage tank during periods of tank maintenance. The tank is constructed of material compatible with drinking-quality water.

Pressure Maintenance Pumps

Two 100% capacity pumps are provided to maintain system pressure within the prescribed operating range. These pumps are made of materials compatible with drinking-quality water. Each pump is equipped with a discharge check valve and suction and discharge isolation valves.

Piping and Valves

Branch connections to equipment, including hose bibs, or to other systems are individually isolable and are equipped with backflow preventers to prevent backflow and potential contamination of the Potable Water System. Connections to sinks or showers do not require backflow preventers, because there is an air gap between the potable water and the receiving drains. However, siphon breakers are installed where needed.

Water Heaters

Water heaters are provided for showers, wash and janitorial sinks, lunchroom, kitchen, laundry, and eyewash stations, and are sized, installed and controlled in such fashion as to supply on-demand hot water. Eyewash stations and emergency showers also include pre-set temperature control valves to deliver tepid water, per OSHA requirements.

Sanitary Waste Water System

Piping and Valves

Sanitary waste water piping is sized for peak anticipated loading during outage periods and as required to meet national and local plumbing code requirements.

Collection Pits and Tanks

Sanitary waste collection pits are concrete lined with steel. Tanks are constructed of steel.

Waste Water Treatment Facility

The Waste Water Treatment Facility is a separate building for the treatment of sanitary waste. It includes tanks for collection, pre-treatment, and sludge for holding purposes, macerating pumps, oil/water separator, aeration blowers, and clarifiers.}

9.2.4.2.3 Operations

No departures or supplements.

© 2007 UniStar Nuclear Development, LLC. All rights reserved.
COPYRIGHT PROTECTED

9.2.4.3 Safety Evaluation

{Potable Water System

The Potable Water System is not a safety-related system. Therefore, it does not require a safety evaluation with respect to plant design basis events.

With respect to compliance with Criterion 60 of Appendix A to 10 CFR 50, the Potable Water System is not connected to any components or other systems that have the potential to carry radiological material, nor do any systems discharge to it with the exception of the desalination plant that supplies makeup. Further, under normal operating conditions, system pressure is maintained above the pressure of supplied components or systems, thus preventing backflow from that supplied component / system.

In addition, a backflow preventer and isolation valve are provided at "hard" connections to supplied components or systems, including hose bibs. These devices are on the potable water side of the connection to prevent backflow under abnormal, reversed differential pressure conditions.

At sinks or showers, an air gap between the potable water supply and the receiving drain prevents possible contamination from backflow. There are also siphon breakers where necessary on supply risers.

With respect to flooding concerns, the potable water storage tank is located such that even its catastrophic failure would not threaten the functionality of safety-related SSCs. Intervening topography and site drainage configuration would direct released water away from areas where it might otherwise cause damage. Site flooding is discussed in Section 2.4.10.

Sanitary Waste Water System

The Sanitary Waste Water System provides no safety-related function. Therefore, it does not require a safety evaluation with respect to design basis events.

Sanitary waste water from decon showers, decon sinks and the laundry in the Access Building is directed to the Liquid Waste Management System, through the NI vents and drains system. Although drainage from showers, sinks and laundry is typically classified as sanitary water, the decon showers and sinks are used exclusively for radiological decontamination of personnel, and the laundry is used for personnel anti-contamination clothing and equipment (e.g., respirators). This does not result in biological waste loading, and is acceptable for forwarding to the Liquid Waste Management System.

With respect to compliance with Criterion 60 of Appendix A to 10 CFR 50 (CFR, 2008), sanitary waste piping in the Access Building leads from the non-RCA through the portion of the Sanitary Waste Water System that collects domestic waste water. This sanitary waste piping is completely separate from the NI vents and drains. Further, the portion of the Sanitary Waste Water System that collects domestic waste water in the Access Building, the Safeguards Buildings, and outside (underground) areas in the NI is not connected to any other system, so there is no potential for inadvertent introduction of radioactive material. The remainder of the Sanitary Waste Water System is outside the NI portion of the plant, and does not connect to any system or equipment that has the potential to carry/contain radiological contamination.

With respect to flood protection:

© 2007 UniStar Nuclear Development, LLC. All rights reserved.
COPYRIGHT PROTECTED

- The sanitary waste water collection pits or tanks are located at or below grade and in areas that are separated from safety-related SSCs. The drain lines from these pits or tanks are embedded in floor slabs and run underground outside the buildings. Inside the buildings, flooding from pits, tanks or broken sanitary lines will be effectively controlled by building floor drain systems that are designed to handle larger flows from, for example, the Fire Protection System (refer to U.S. EPR FSAR Section 9.3.3 for discussion of floor drains). Therefore, failures of the Sanitary Waste Water System, including failures of pits or tanks, will not jeopardize safety functions by flooding.

- The Waste Water Treatment Facility is physically separated and located down-grade from safety-related SSCs, in a separate building. In addition, buildings that house safety-related SSCs are constructed with ground floor slabs elevated above grade and with surrounding site drainage established to direct potential flood waters away, as described in Section 2.4.10. Therefore, failures of the Waste Water Treatment Facility, including failures of tanks, will not jeopardize safety functions by flooding.}

9.2.4.4 Inspection and Testing Requirements

{Potable Water System

Once the system is placed in service, periodic routine sampling of the water provides ongoing verification of potability.

Sanitary Waste Water System

The Sanitary Waste Water System, including the Waste Water Treatment Facility, is visually inspected to verify installation in accordance with design drawings and documents, and functionally tested to demonstrate proper system operation.}

9.2.4.5 Instrumentation Requirements

{Instrumentation includes level, temperature, pressure and flow as required for process automation, and for the visual and audible indication and alarms necessary for monitoring of system performance.}

9.2.4.6 References

{This section is added as a supplement to the U. S. EPR FSAR.

ANSI, 2004. Emergency Eyewash and Shower Equipment, ANSI Z358.1, American National Standards Institute, 2004.

CFR, 2008. Control of Releases of Radioactive Materials to the Environment, Title 10, Code of Federal Regulations, Part 50, Appendix A, General Design Criterion 60, U. S. Nuclear Regulatory Commission, 2008.}

9.2.5 ULTIMATE HEAT SINK

{No departures or supplements.}

9.2.5.1 Design Basis

{ESWS support systems are schematically represented in Figure 9.2-3. Normal essential service water makeup provides up to 940 gpm (3560 lpm) of desalinated water to each operating ESWS cooling tower basin to replenish ESWS inventory losses due to evaporation, blowdown, drift, and incidental system leakage during normal operations and shutdown/cooldown. ESWS

© 2007 UniStar Nuclear Development, LLC. All rights reserved.
COPYRIGHT PROTECTED

cooling tower blowdown discharges up to 470 gpm (1780 lpm) of water from each operating ESWS cooling tower basin to the retention basin to maintain ESWS chemistry. This quantity is based on maintaining two cycles of concentration in the cooling tower basin, plus evaporative losses during shutdown and cooldown, with ambient conditions at 81° F (27° C) design wet bulb temperature and coincident 115° F (46° C) dry bulb temperature.

During a design basis accident, the ESWS Cooling Tower for one train has an evaporative loss of 571 gpm (2160 lpm), and blowdown is secured.

The ESWS makeup chemical treatment system provides a means for adding chemicals to the UHS makeup water and to the normal ESWS makeup water. This is done to limit corrosion, scaling, and biological contaminants in order to minimize component fouling.}

9.2.5.2 System Description

The U. S. EPR FSAR includes the following COL Items in Section 9.2.5.2:

> A COL applicant that references the U.S. EPR design certification will provide site-specific information for the UHS support systems such as makeup water, blowdown and chemical treatment (to control biofouling).
>
> The UHS contains isolation valves at the cooling towers to isolate the safety related portions of the system from the non-safety related basin support systems provided by the COL applicant.

These COL Items are addressed as follows:

{Sections 9.2.5.2.1 through 9.2.5.2.4 are added as a supplement to the U. S. EPR FSAR.

9.2.5.2.1 Normal ESWS Makeup

Normal ESWS makeup water is provided to the ESWS cooling tower basins using desalinated water from the desalinization plant. FSAR Section 9.2.9 provides additional discussion of the Raw Water Supply System and the desalinization plant.

Normal ESWS makeup water is delivered from the desalinization plant to the power block area. A separate line feeds each ESWS division. Each ESWS division's normal makeup line ties into its ESWS emergency makeup line (i.e., UHS makeup water line) through a safety-related motor operated valve (MOV) in the ESWS pumphouse at the ESWS cooling tower basin. The tie-in point is inboard of (or downstream of) the UHS makeup water system isolation MOV. The safety-related normal makeup water isolation MOV ensures the integrity of the ESWS cooling tower basin and the UHS Makeup Water System by closing in the event of a design basis accident (DBA).

9.2.5.2.2 Blowdown

Blowdown from the ESWS cooling tower basins is a non-safety-related function. The site-specific blowdown arrangement for each ESWS cooling tower basin is a line that runs from the ESWS pump's discharge piping to a header in the yard area where all four blowdown lines join. The header then runs to the waste water retention basin.

The connection at the ESWS pump discharge is made through a safety-related MOV that closes automatically in the event of a DBA to ensure ESWS integrity.

© 2007 UniStar Nuclear Development, LLC. All rights reserved.
COPYRIGHT PROTECTED

An alternate blowdown path is provided from the same pump discharge connection through a second safety-related MOV in case the normal path is unavailable.

Under normal operating conditions and shutdown/cooldown conditions, the normal blowdown valves automatically modulate blowdown flow from their ESWS trains to the retention basin to help ensure cooling water chemistry remains within established limits.

During a DBA, blowdown flow can be manually controlled from the main control room by adjustment of the safety-related MOV.

9.2.5.2.3 UHS Makeup Water System

Emergency makeup water for the ESWS is provided by the site-specific, safety-related UHS Makeup Water System that draws water from the Chesapeake Bay. Chesapeake Bay water enters the UHS Makeup Water Intake Structure through an intake channel shared with the Circulating Water System (CWS) Makeup Water Intake Structure. The UHS Makeup Water Intake Structure houses four bar screens and four dual-flow traveling screens that remove large debris and trash that may be entrained in the flow.

There are four independent UHS Makeup Water System trains, one for each ESWS division. Each train has one vertical turbine type wet pit pump, a discharge check valve, a self-cleaning simplex strainer, and a pump discharge isolation MOV (all housed in the UHS Makeup Water Intake Structure pumphouse), plus the buried piping running up to and into the ESWS pumphouse at the ESWS cooling tower basin. The UHS Makeup Water System isolation MOV is located inside the ESWS pumphouse at the connection to the ESWS cooling tower basin.

In addition, each train has a surveillance test bypass that runs from just upstream of the isolation MOV at the ESWS cooling tower basin, through a safety-related MOV, to the blowdown line downstream of the blowdown flow meter. The latter safety-related MOV is normally closed, and will go closed if open on receipt of an accident signal, providing assurance of UHS Makeup Water System integrity.

Instrumentation and controls are provided for monitoring and controlling individual components and system functions.

The pump, check valve, pump isolation MOV and strainer for each train are located in one of four separate watertight rooms in the UHS Makeup Water Intake Structure pumphouse. The associated electrical switchgear and equipment for each train's pump and MOV is similarly housed in a separate watertight room in the nearby UHS Electrical Building.

A general area drawing of the site-specific CCNPP Unit 3 UHS Makeup Water Intake and Circulating Water Makeup Water Intake Structures is shown in Figure 9.2-4. This figure also shows the intake channel. A plan view of the UHS Makeup Water Intake Structure is shown in Figure 9.2-5 and a section view is shown in Figure 9.2-6.

9.2.5.2.4 ESWS Makeup Water Chemical Treatment

The UHS Makeup Water System is normally in standby mode, and its brackish water is therefore stagnant. Specific chemistry requirements are defined to minimize corrosion, prevent scale formation, and limit biological and sedimentary fouling that could inhibit UHS Makeup Water flow. In addition, there are chemical additives used in the ESWS cooling towers to reduce scaling and corrosion, and to treat potential biological contaminants, which are added via the

© 2007 UniStar Nuclear Development, LLC. All rights reserved.
COPYRIGHT PROTECTED

normal ESWS piping. The ESW makeup chemical treatment system provides the chemistry control in both instances.

The treatment system consists of multiple skid-mounted arrangements, one for each division's ESWS cooling tower and at least one for the UHS Makeup Water Intake Structure to service each UHS Makeup Water System division's train. Each skid contains the equipment, instrumentation and controls to fulfill the system's function of both monitoring and adjusting water chemistry. The root valves at the connections of chemical addition and sample lines to the UHS Makeup Water System or normal ESWS piping are safety-related as necessary to ensure the integrity of UHS Makeup Water System piping during and following a DBA.

The specific chemicals and addition rates are determined by periodic water chemistry analyses. The chemicals are divided into six categories, based on function:

- biocide - prevents buildup of potentially damaging aquatic life, such as zebra mussels, and controls bacterial growth in the ESWS cooling towers (particularly Legionellae).
- algaecide - prevents buildup of potentially damaging algae and plant growth.
- pH adjuster - counteracts the acidic effects of the algaecide.
- corrosion inhibitor - prevents corrosion of piping and components due to saltwater environment and exposure.
- scale inhibitor - prevents buildup of scale and mineral deposits that could inhibit process flow.
- silt dispersant - prevents buildup of hard silt deposits.

Additions to the ESWS cooling towers are made as necessary on a periodic or continuing basis. The additions to the UHS Makeup Water System are made coincident with surveillance test runs, or as otherwise needed.}

9.2.5.3 Component Description

{Normal ESW Makeup Isolation Valves

The normal ESWS Makeup Water System isolation valves are safety-related MOVs designed to ASME Section III, Class 3 requirements, and made of materials compatible with the brackish UHS makeup water.

UHS Makeup Water Intake Structure Bar Screens and Traveling Screens

The UHS Makeup Water Intake Structure houses four bar screens and four dual-flow traveling screens. These screens are designed to meet Seismic Category II requirements. They prevent debris from passing into the UHS Makeup Water System pumps, and subsequently into the Component Cooling Water System heat exchangers, as well as the intercoolers, lube oil coolers, and water jackets of the emergency diesel generators. A screen wash system consisting of two submersible screen wash pumps provides high pressure spray to remove debris. These traveling screens are non-safety-related, but have a large enough face area that potential blockage to the point of preventing the minimum required flow through them is not a concern.

© 2007 UniStar Nuclear Development, LLC. All rights reserved.
COPYRIGHT PROTECTED

UHS Makeup Water System Pumps

There are four vertical turbine pumps, each rated at 750 gpm (approximately 2835 lpm). Each pump is driven by an electric motor, and is equipped with a discharge check valve and motor operated isolation valve. They are designed to ASME Section III, Class 3 requirements, and constructed of materials compatible with the brackish UHS makeup water.

UHS Makeup Water System Isolation Valves

The UHS Makeup Water System isolation valves are safety-related MOVs designed to ASME Section III, Class 3 requirements, and are made of materials compatible with the brackish UHS makeup water. For each train, there are the pump isolation MOV, the UHS Makeup Water System isolation MOV at the ESWS cooling tower basin, and the UHS Makeup Water System bypass isolation MOV.

UHS Makeup Water System Self Cleaning Strainers

There are four UHS Makeup Water System self-cleaning strainers, one on the discharge side of each UHS Makeup Water pump. They are designed to ASME Section III, Class 3 requirements, and constructed of materials compatible with the brackish UHS makeup water.

The strainers remove debris from the process flow that is not trapped by the trash racks and traveling screens.

UHS Makeup Water System Piping

The UHS Makeup Water System piping and fittings are designed to ASME Section III, Class 3 requirements, including normal operation and anticipated transient conditions. They are constructed of materials compatible with the brackish UHSmakeup water.

Chemical Treatment System Isolation Valves

These are safety-related valves at chemical treatment system connections to normal ESWS or Ultimate Heat Sink Makeup Water System piping that assure normal or Ultimate Heat Sink Makeup Water System integrity in the event of a DBA. They comply with the requirements of ASME Section III, Class 3, and are constructed of materials compatible with the brackish Ultimate Heat Sink makeup water and the chemicals injected, as are the piping branches from the safety-related piping to which they connect.

Chemical Treatment System Components

The components of the chemical treatment system upstream of the safety-related MOV are non-safety-related. They include:

Metering pumps - These are positive displacement pumps capable of delivering adjustable, measured amounts of chemical product.

Tanks - These storage tanks are provided for each category of chemical.

Control Valves - These are needle valves that can be adjusted for precise control of the rate of chemical addition.

Sample Valves/Lines - There are several sample points located at representative points in the normal and emergency makeup piping for confirmatory sampling of makeup water chemistry.

pH Monitor - This device monitors makeup water pH.

© 2007 UniStar Nuclear Development, LLC. All rights reserved.
COPYRIGHT PROTECTED

Conductivity meter - This device measures makeup water conductivity.

All of these components are constructed of materials compatible with the chemicals utilized in the treatment system.

ESWS Cooling Tower Blowdown System Isolation Valves

These are safety-related MOVs that isolate blowdown at the branch connection on the ESWS pump discharge, for assurance of ESWS integrity in the event of an accident. The valves and the branch connections up to the valves are designed to ASME Section III, Class 3 requirements, and constructed of materials compatible with the brackish UHS makeup water.

ESWS Cooling Tower Blowdown System Piping, Valves and Fittings

The ESWS Cooling Tower Blowdown System components downstream of the MOV are non-safety-related. They are made of carbon steel material because the normal blowdown is non-brackish water from the normal ESWS makeup system.}

9.2.5.4 System Operation

9.2.5.4.1 {Normal Operating Conditions

The normal ESWS makeup is supplied from the desalinization plant. The two operating ESWS divisions have the normal makeup MOVs open, while the two standby divisions' normal makeup MOVs are closed.

Blowdown from each train is aligned to the waste water retention basin, with flow rate controlled by manual adjustment of the safety-related motor operated blowdown isolation valve.

The UHS Makeup Water System for each division is in standby, with the UHS Makeup Water System isolation MOV at the ESWS cooling tower basin closed and the pump isolation MOV closed. The bypass line's MOV is also closed.

Periodic surveillance testing is conducted to demonstrate UHS Makeup Water System operability, and includes addition of chemicals as necessary to maintain its water chemistry within the prescribed limits.

9.2.5.4.2 Abnormal Operating Conditions

On receipt of an accident signal, the normal ESWS Makeup Water System isolation MOVs that are open will close; those that are closed will remain closed. In addition, the ESWS cooling tower blowdown isolation valves will close, and any open safety-related valves in the chemical treatment system will close. None of these safety-related valves can be opened until the accident signal is cleared. Subsequent action is manually initiated from the main control room or locally, based on operators' judgment resulting from prevailing conditions and indications. This includes initiating the UHS Makeup Water System to any and/or all ESWS cooling tower basins, as well as blowdown from any and/or all ESWS cooling tower basins.}

9.2.5.5 Safety Evaluation

{Normal ESWS makeup is a non-safety-related function, and thus requires no safety evaluation with respect to design basis events. Similarly, both cooling tower blowdown and chemical treatment are non-safety-related functions and require no safety evaluation. However, the connections to safety-related piping through which these functions are made and the

© 2007 UniStar Nuclear Development, LLC. All rights reserved.
COPYRIGHT PROTECTED

accompanying isolation valves are safety-related, which ensures the integrity of the safety-related piping in the event of a DBA.

The UHS Makeup Water System function is to provide reliable makeup to the ESWS cooling tower basins, starting no later than 72 hours after receipt of an accident signal, to ensure that sufficient makeup flow is provided so the ESWS can fulfill its design requirement of shutdown decay heat removal for a minimum of 30 days following a DBA.

This function is assured because the UHS Makeup Water System:

- Is designed, procured, constructed and operated in accordance with the criteria for ASME Section III, Class 3 safety-related systems, structures and components, and Seismic Category 1 requirements, including the tie-in piping and isolation valves for normal makeup, and chemical addition and sampling.
- Has four equivalent and completely independent trains, any two of which are capable of providing the required worst case makeup flow.
- Has each UHS Makeup Water System pump and its associated valves, strainer, electrical switchgear, and local controls and instrumentation housed in watertight enclosures in the UHS Makeup Water Intake Structure for protection against worst case flooding at the Chesapeake Bay shoreline.
- Has an UHS Makeup Water Intake Structure which is designed and built for protection against seismic and missile hazards.
- Has each UHS Makeup Water System pump installed such that its function is protected against the worst case low water event.
- Has seismically qualified and installed (buried) piping runs from the UHS Makeup Water Intake Structure to the individual ESWS cooling tower basins.
- Is treated to meet specified limits on system water chemistry in order to prevent potentially detrimental fouling of stagnant piping sections and surfaces.
- Is periodically performance tested and sampled to confirm operability and verify system water chemistry requirements.
- has a set of traveling screens for the UHS Makeup Water Intake Structure that, although not safety-related are designed and installed to meet Seismic Category II requirements, assuring that they will withstand a safe shutdown earthquake (SSE), and are large enough to preclude the occurrence of their being blocked to the extent that minimum required flow of water cannot be maintained.

In addition, reconciliation of the site-specific climatology data has demonstrated that the ESWS cooling tower performance maintains the ESWS temperature below the required 95° F (35° C).}

9.2.5.6 Inspection and Testing Requirements

{The UHS Makeup Water System components, including the safety-related motor operated isolation valves for makeup and blowdown, and the safety-related isolation valves for chemical treatment and sampling, are procured and fabricated in accordance with the quality

© 2007 UniStar Nuclear Development, LLC. All rights reserved.
COPYRIGHT PROTECTED

requirements for safety-related ASME Section III, Class 3 systems, structures and components to ensure compliance with approved specifications and design documents.

Installation of individual components and overall system construction are inspected to verify the as-built condition is in accordance with approved drawings. Performance testing upon completion of construction verifies the system's ability to perform its design safety function.

Finally, periodic surveillance testing of the system, including the safety-related isolation valves, provides continuing assurance of the system's ongoing capability to perform its design function. Surveillance testing includes system performance tests and inspection of individual components, as appropriate to their importance to system function and their tendency to degrade due to their operational conditions and environment.}

9.2.5.7 Instrumentation Applications

{Instrumentation is applied to the ESWS Normal Makeup Water System, UHS Makeup Water System and blowdown, to the extent necessary to monitor essential component conditions and verify real time system performance. This includes limit switches that provide remote position indication for valves. It also includes pressure, temperature and differential pressure sensors that provide local and remote display of system pressure, temperature and flow. In addition, temperature and amperage sensors can be used for indirect flow indication and direct indication of component status.

System performance can also be assessed using level indication on the cooling tower basins.}

9.2.5.8 References

No departures or supplements.

9.2.6 CONDENSATE STORAGE FACILITIES

No departures or supplements.

9.2.7 SEAL WATER SUPPLY SYSTEM

- No departures or supplements.

9.2.8 SAFETY CHILLED WATER SYSTEM

No departures or supplements.

9.2.9 RAW WATER SUPPLY SYSTEM

The U. S. EPR FSAR includes the following COL Item in Section 9.2.9:

> The RWSS and the design requirements of the RWSS are site-specific and will be addressed by the COL applicant.

This COL Item is addressed as follows:

{Raw water is the term usually applied to untreated water. At CCNPP Unit 3, raw water is supplied from the Circulating Water System Makeup Water System (which draws water from the Chesapeake Bay) and is directed to the desalinization plant. The desalinization plant processes raw brackish water through filtration and reverse osmosis, with auxiliary chemical treatment, delivering clean water to the desalinated water storage tank. The water from that

© 2007 UniStar Nuclear Development, LLC. All rights reserved.
COPYRIGHT PROTECTED

tank then provides all of the clean water suitable for various plant services, including feed to the demineralized water and potable water systems, and use by the fire protection and essential service water systems. This encompasses all of the plant water demands, with the exception of Circulating Water System makeup and UHS makeup during emergency conditions.

9.2.9.1 Design Basis

No cross connections exist between raw Chesapeake Bay water supplied to the desalinization plant and any system with the potential to carry radioactive material. This design requirement satisfies Criterion 60 of Appendix A to 10 CFR 50 (CFR, 2008).

Raw water from the Circulating Water System Makeup Water System is supplied to the desalinization plant. Desalinated water is then supplied to the demineralized water, potable water, fire protection, and essential service water (except under emergency operating conditions) systems during periods of normal power operation, shutdown, maintenance and construction. The emergency makeup to essential service water is provided by a dedicated, safety-related system. The UHS Makeup Water System is discussed in Section 9.2.5.

Sections 9.2.9.1 through 9.2.9.7 are added as a supplement to the U. S. EPR FSAR.

9.2.9.2 System Description

Raw water is delivered to the desalinization plant through a non-safety-related line. The desalinization plant is a non-safety-related, non-seismic system that provides all of the water for plant use, with the exception of Circulating Water System Makeup and, under emergency conditions, ESWS makeup.

The desalinization plant supplies water for initial fill and makeup to the following systems:

- Essential service water during all but emergency conditions.
- Demineralized water.
- Potable water.
- Fire protection.

The raw water/desalinated water supply is schematically represented in Figure 9.2-7.

Raw water is supplied by diverting part of the Circulating Water System makeup flow. The Circulating Water system makeup pumps provide the motive force for this diversion flow, which is directed to the desalinization plant located adjacent to the Circulating Water System cooling tower.

The raw water is processed through desalinization, which consists of filtration, reverse osmosis and chemical treatment, and then sent to the desalinated water storage tank. From the storage tank, the desalinated water is distributed to the demineralized water, potable water, fire protection, and essential service water systems for their initial fill, and as needed for makeup. Emergency makeup to the ESWS is provided by the dedicated UHS Makeup Water System, described in Section 9.2.5.

© 2007 UniStar Nuclear Development, LLC. All rights reserved.
COPYRIGHT PROTECTED

During normal operation, desalinated water demand is approximately 875 gpm (3310 lpm). Peak demand of approximately 2400 gpm (9100 lpm) occurs for approximately 4 to 6 hours during normal plant shutdown/cooldown operations, and is driven by additional makeup to the ESWS.

9.2.9.3 Component Descriptions

Raw Water Piping

Raw water flows from the Circulating Water System Makeup System to the desalinization plant through an underground pipe.

Desalinization Plant

The desalinization plant consists of pumps, tanks, filters, reverse osmosis and other process equipment necessary for desalinating the brackish Chesapeake Bay water.

Desalinated Water Storage Tank

This is a 600,000 gallon (2.3 million liter) tank, which is sized for 8 hours of storage at the maximum desalinated water production rate of 1225 gpm (4637 lpm). The tank is equipped with level sensors, a vent, a drain and an overflow line.

Desalinated Water Transfer Pumps

These are horizontal centrifugal pumps that forward water to the supplied systems. Each pump is equipped with a discharge check valve, suction and discharge isolation valves, and a recirculation line for maintaining system pressure while meeting minimum flow requirements. Two 100% capacity transfer pumps supply the demands of essential service water, fire protection and feed to the demineralized water system. A second pair of 100% capacity pumps is provided for potable water demand. Duplicate full capacity transfer pumps makes online inspection and maintenance of these pumps possible without unduly affecting system operation.

Desalinated Water Distribution Piping and Valves

The piping and valves which connect the system components to each other and to the supplied systems are made of materials compatible with the process fluid.

9.2.9.4 Safety Evaluation

Raw water supply and the desalinization plant provide no safety-related function. Therefore, no safety evaluation is required with respect to plant design basis events.

There is no connection between raw water supplied to the desalinization plant, or the desalinization plant itself, and components or other systems that have the potential to carry radiological contamination. This complies with Criterion 60 of Appendix A to 10 CFR 50 (CFR, 2008).

With respect to potential flooding caused by failures of piping or components, the raw water delivery piping and the desalinization plant are located remote from any safety related systems or equipment, except for the lines connecting to the ESWS cooling tower basins. Failures other than at the tower basin connections will not adversely impact safety functions because intervening topography and the plant storm water controls are designed to divert surface water flow, including that which would result from catastrophic failure of the desalinated water storage tank. The connections to the tower basins are made through safety-related motor operated valves, thereby assuring basin integrity under accident conditions. Potential leakage

© 2007 UniStar Nuclear Development, LLC. All rights reserved.
COPYRIGHT PROTECTED

from the desalinated water lines in the essential service water pump houses is controlled, collected and routed away by the floor drains in those structures. These floor drain lines include check valves where necessary to prevent possible backflow from causing flooding that could adversely affect the safety related equipment.

9.2.9.5 Inspection and Testing Requirements

Visual inspections are conducted during construction to verify that the as-built condition is in accordance with design documents. Pressure testing and functional testing are conducted during post-construction pre-commissioning and startup, as necessary to confirm system integrity and proper operation of individual components and the total system. Portions of the system are demonstrated with in-service leak testing where such method does not jeopardize other systems/equipment and is sufficient to demonstrate proper operation.

Ongoing system operation provides continuing demonstration of the system's functionality.

9.2.9.6 Instrumentation Requirements

Instrumentation includes sensing and display of various parameters as necessary to automate system function, and to provide for local and remote system monitoring, including alarms. These parameters include desalinization system tank levels, flows, temperatures and pressures, as well as desalinated water tank level and temperature, essential service water makeup flow, demineralized water system feed flow, and potable water system feed flow. Valve position indication for selected valves and pump power on/off indication are also provided.

9.2.9.6.1 References

CFR, 2008. Control of Releases of Radioactive Materials to the Environment, Title 10, Code of Federal Regulations, Part 50, Appendix A, General Design Criterion 60, U. S. Nuclear Regulatory Commission, 2008.}

© 2007 UniStar Nuclear Development, LLC. All rights reserved.
COPYRIGHT PROTECTED

Figure 9.2-1—{Potable Water System}

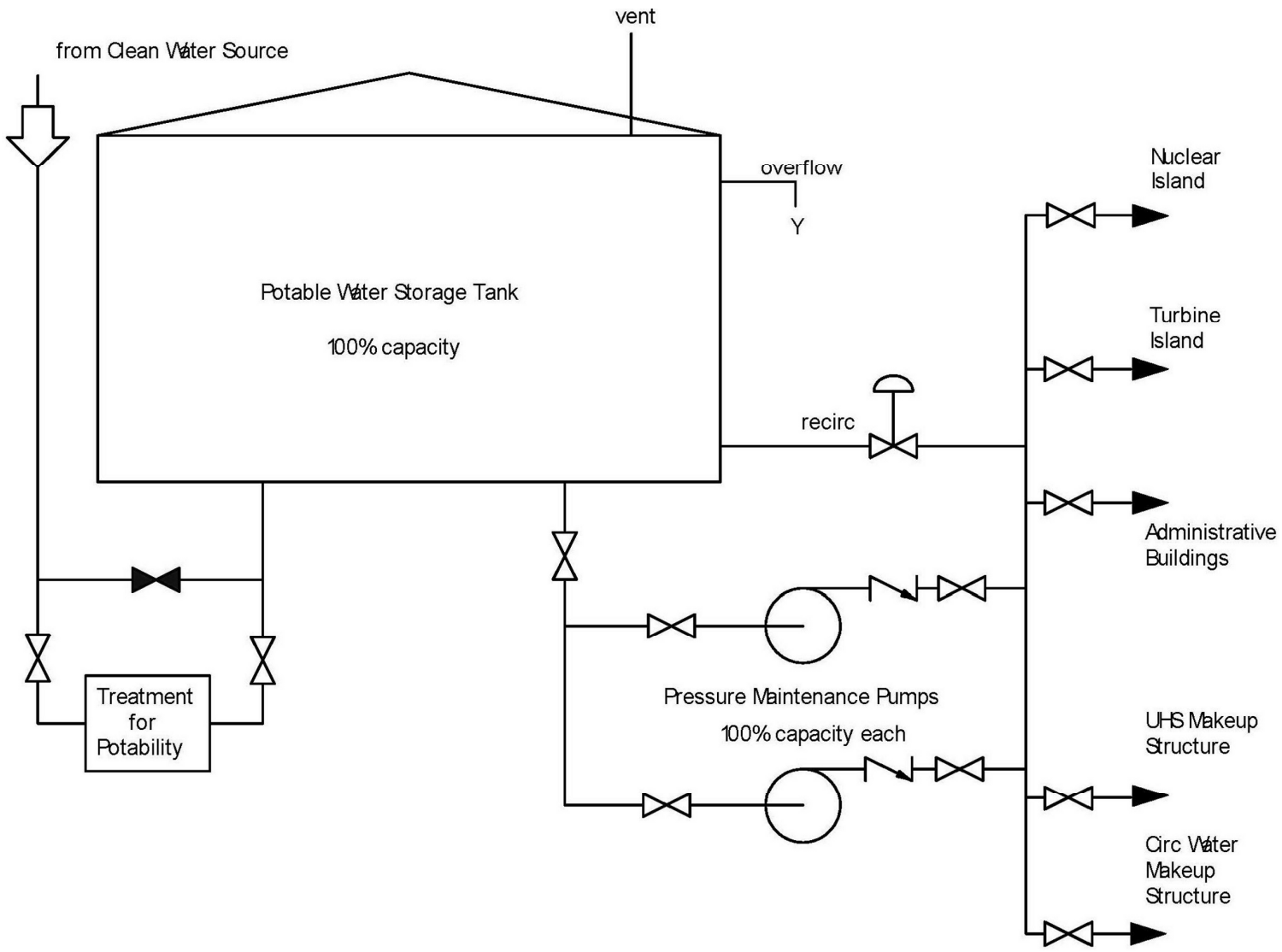

© 2007 UniStar Nuclear Development, LLC. All rights reserved.
COPYRIGHT PROTECTED
FSAR Section 9.0

Figure 9.2-2—{Sanitary Waste Water System}

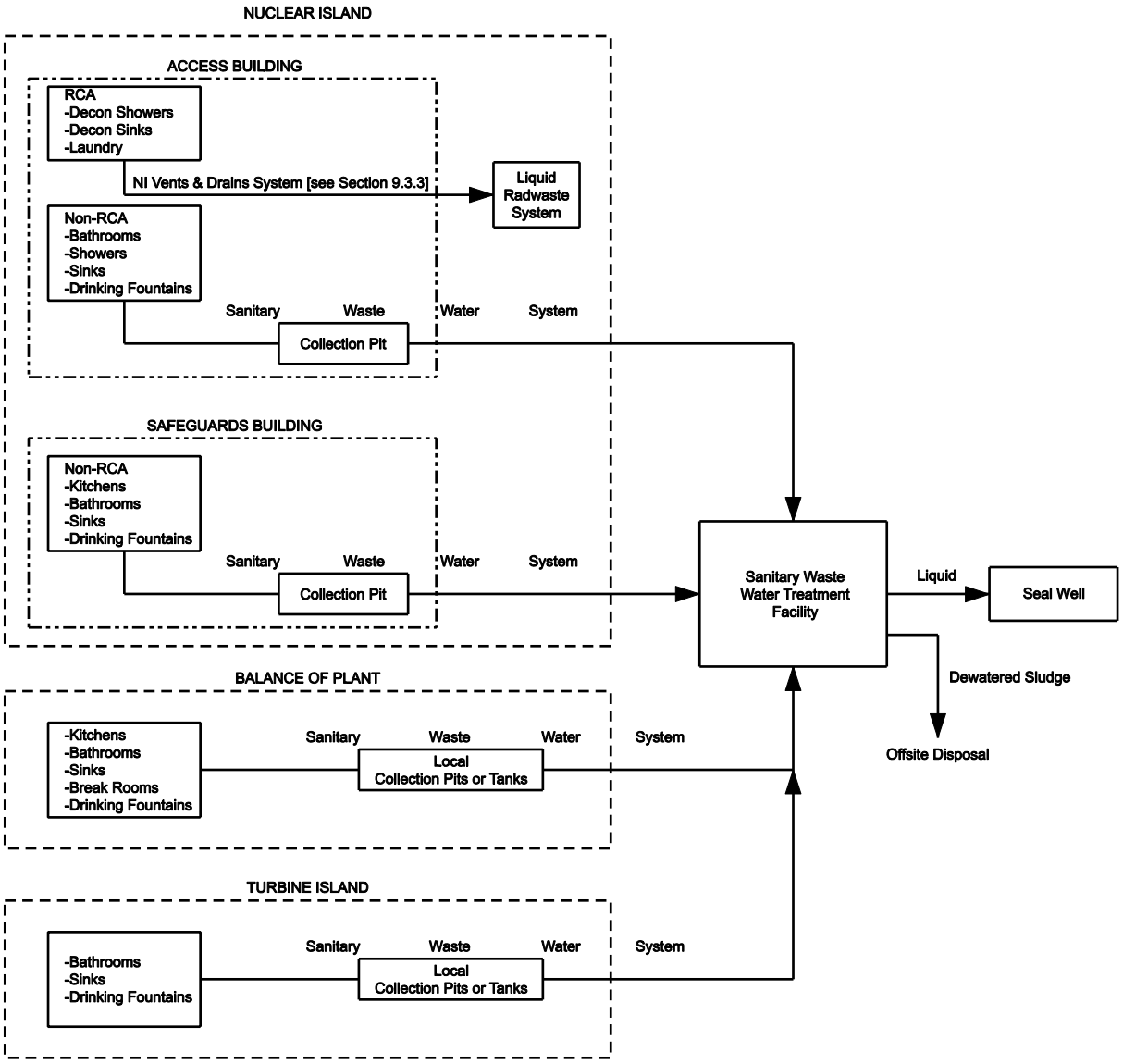

© 2007 UniStar Nuclear Development, LLC. All rights reserved.
COPYRIGHT PROTECTED
FSAR Section 9.0

Figure 9.2-3—{Normal Makeup, UHS Makeup, Blowdown & Chemical Treatment}

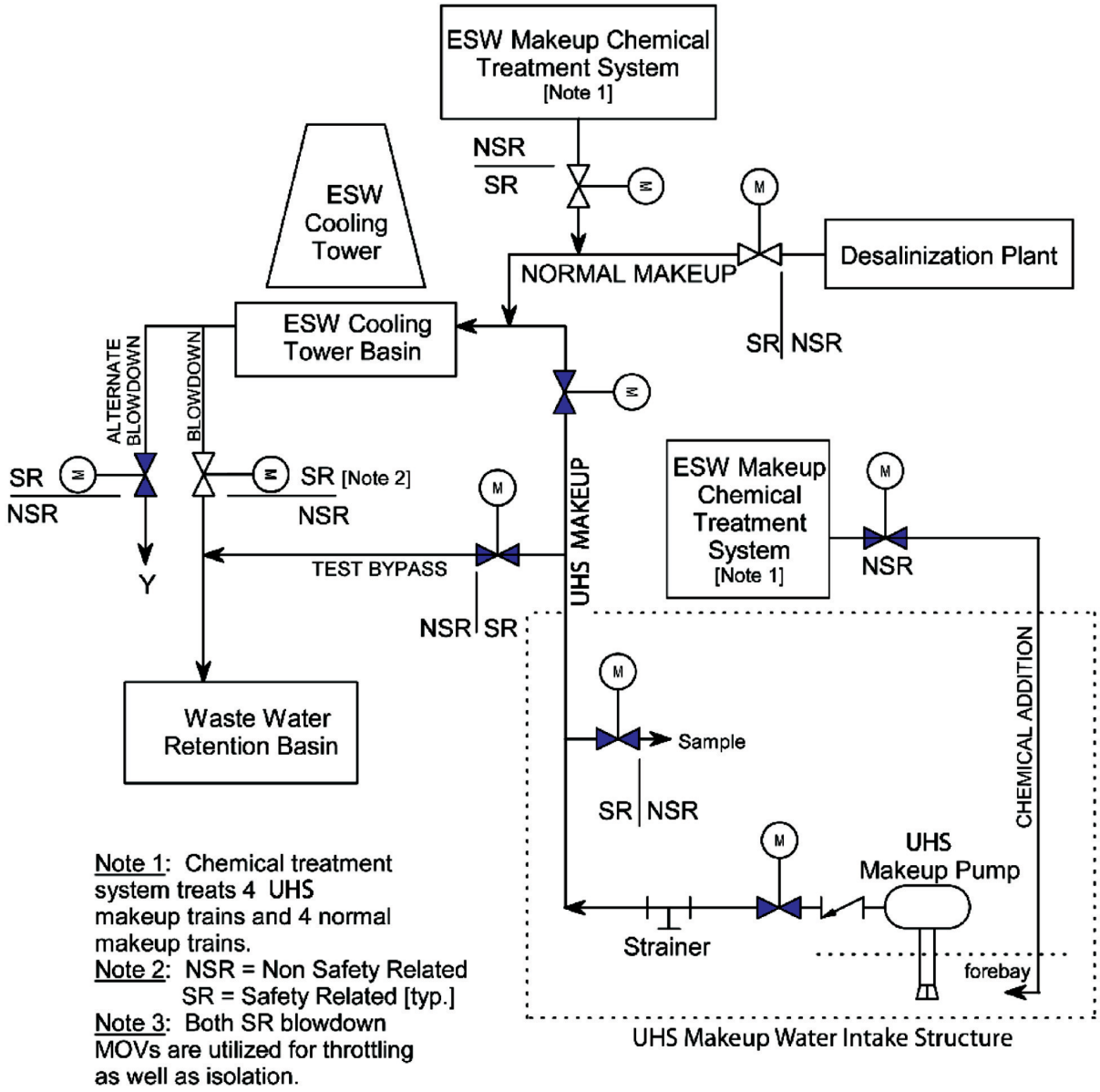

© 2007 UniStar Nuclear Development, LLC. All rights reserved.
COPYRIGHT PROTECTED

Figure 9.2-4—{General Area - UHS Makeup Water and CW Intake Structures}

© 2007 UniStar Nuclear Development, LLC. All rights reserved.
COPYRIGHT PROTECTED

Figure 9.2-5—{UHS Makeup Water Intake Structure - Plan View}

© 2007 UniStar Nuclear Development, LLC. All rights reserved.
COPYRIGHT PROTECTED

Figure 9.2-6—{UHS Makeup Water Intake Structure - Section View}

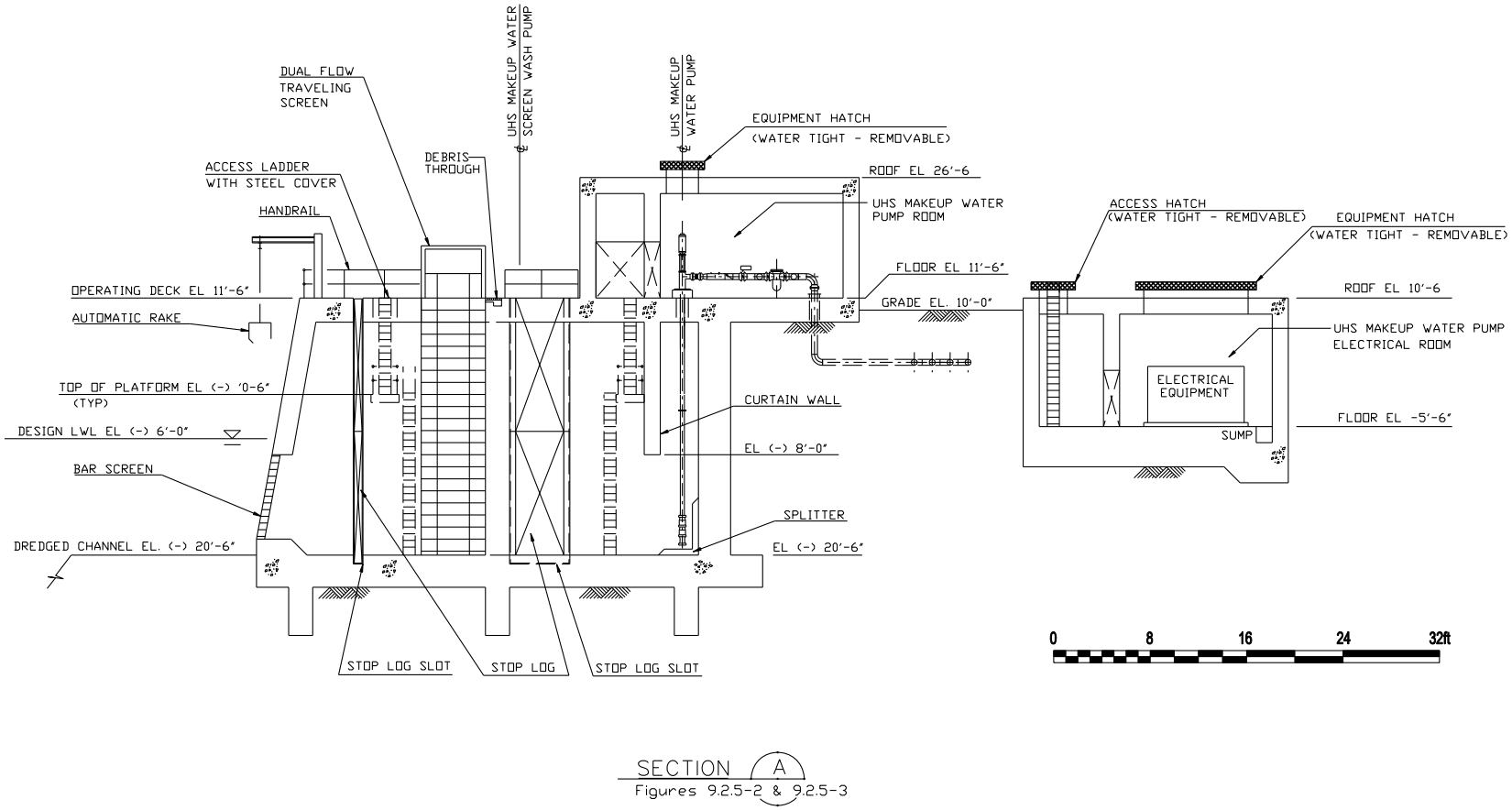

© 2007 UniStar Nuclear Development, LLC. All rights reserved.
COPYRIGHT PROTECTED
FSAR Section 9.0

Figure 9.2-7—{Raw Water and Desalinated Water Supply}

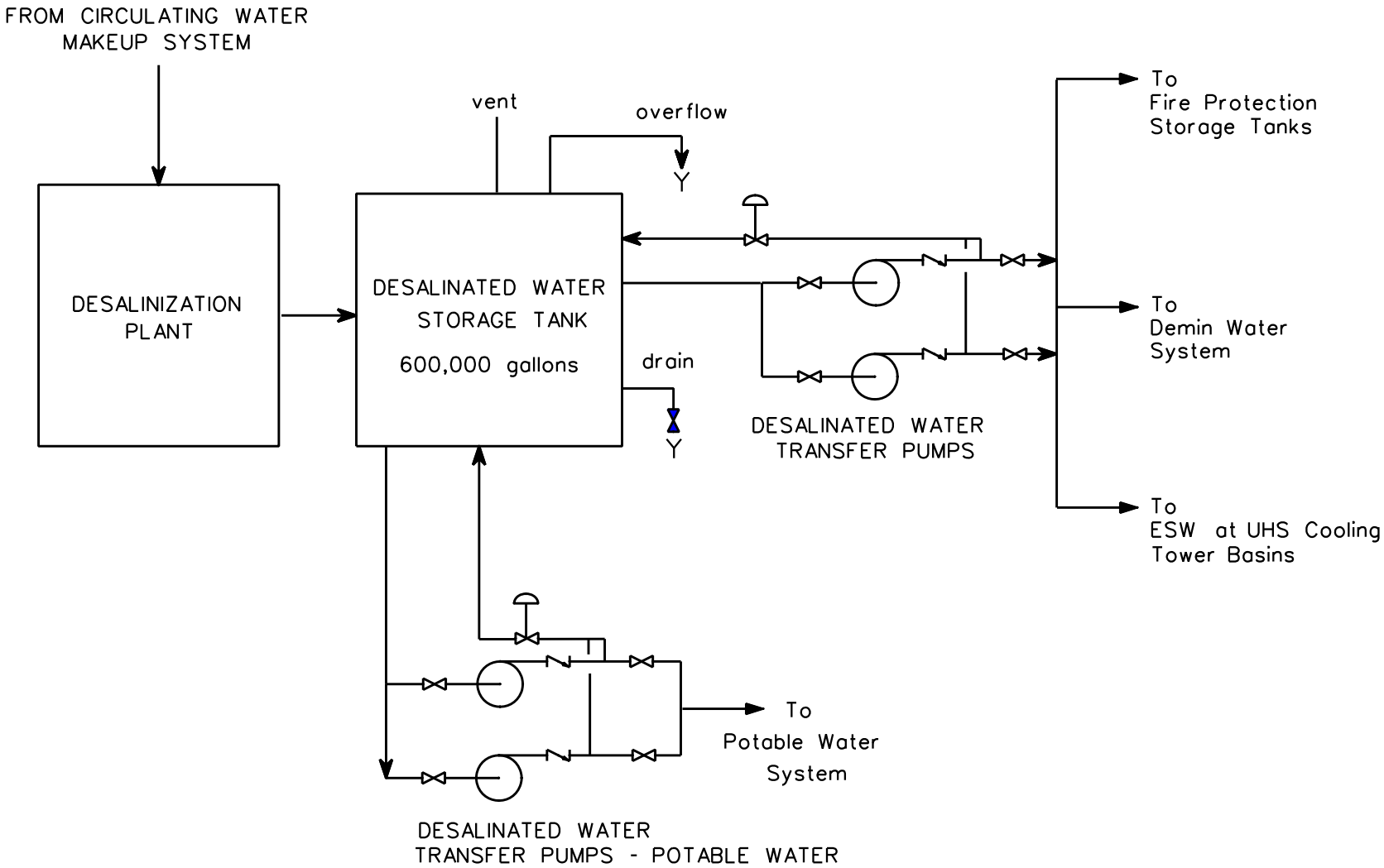

© 2007 UniStar Nuclear Development, LLC. All rights reserved.
COPYRIGHT PROTECTED
FSAR Section 9.0

9.3 PROCESS AUXILIARIES

This section of the U.S. EPR FSAR is incorporated by reference.

9.4 AIR CONDITIONING, HEATING, COOLING AND VENTILATION SYSTEMS

This section of the U.S. EPR FSAR is incorporated by reference with the following supplements.

9.4.1 MAIN CONTROL ROOM AIR CONDITIONING SYSTEM

{No departures or supplements.}

9.4.1.1 Design Bases

The U.S. EPR FSAR includes the following conceptural design information in Section 9.4.1.1:

> The CRACS provides adequate protection against radiation [[and hazardous chemical releases]] to permit access to and occupancy of the control room under accident conditions (DGDC 19). [[The control room occupancy protection requirements meet the guidance of RG 1.78.]]
>
> The CRACS maintains habitability of the CRE areas during a site radiological contamination event [[or toxic contamination of the environment]] (Refer to Section 6.4.)
>
> The CRACS outside air intake is capable of detecting radition and smoke [[and toxic chemicals]] (see Section 6.4.2.4). Associated monitors actuate alarms in the MCR.
>
> [[Upon actuation of the plant toxic gas alarm signal, the outside air intake dampers close automatically and the CRE air is automatically diverted in the recirculation mode without outside air.]]

This conceptual design information is addressed as follows:

{The evaluation of the CCNPP Unit 3 toxic chemicals in Section 2.2.3 did not identify any credible toxic chemical accidents that exceeded the limits established in Regulatory Guide 1.78 (NRC, 2001). No specific provisions are required to protect the operators from an event involving a release of a toxic gas. As a result, toxic gas detectors and isolation are not required and will not be provided at CCNPP Unit 3.}

9.4.1.2 System Description

9.4.1.2.1 General Description

The U.S. EPR FSAR includes the following conceptual design information in Section 9.4.1.2.1 and associated Figure 9.4.1-2:

> Sensors on the outside air inlet protect agains [[toxic gas (refer to Section 6.4.2.4) and]] radiological intrusion.
>
> [[TG - Toxic Gas Sensors]]

The conceptual design information is addressed as follows:

© 2007 UniStar Nuclear Development, LLC. All rights reserved.
COPYRIGHT PROTECTED

{The evaluation of the CCNPP Unit 3 toxic chemicals in Section 2.2.3 did not identify any credible toxic chemical accidents that exceeded the limits established in Regulatory Guide 1.78 (NRC, 2001). No specific provisions are required to protect the operators from an event involving a release of a toxic gas.}

9.4.1.2.2 Component Description

~~{CCNPP Unit 3 departs from the U.S. EPR FSAR as follows:~~

{The results of the CCNPP Unit 3 toxic chemicals evaluation in Section 2.2.3 did not identify any toxic chemicals that exceeded the limits established in Regulatory Guide 1.78. As a result, toxic gas detectors and isolation are not required and will not be provided at CCNPP Unit 3.}

9.4.1.2.3 System Operation

The U.S. EPR FSAR includes the following conceptual design information in Section 9.4.1.2.3:

> [[During a toxic gas accident event,the CRACS is placed in full recirculation mode without any outside air makeup (refer to Section 6.4.2.2.]]
>
> [[Operation During a Toxic Gas Event
>
> Outside air is continuously monitored for toxic gas by the toxic gas sensors located at the air intakes. Upon detection of a toxic gas condition, audible and visual alarms are actuated in the MCR.]]
>
> Operation during External Fire, Smoke [[or Toxic Gas Release]]
>
> In the event of an external fire, [[external toxic gas release,]] smoke, or excessive concentration of CO or CO_2, outside air to the CRACS is isolated manually or automatically and the system operates in full recirculation mode without fresh air.

The conceptual design information is addressed as follows:

{The evaluation of the CCNPP Unit 3 toxic chemicals in Section 2.2.3 did not identify any credible toxic chemical accidents that exceeded the limits established in Regulatory Guide 1.78 (NRC, 2001). No specific provisions are required to protect the operators from an event involving a release fo a toxic gas.}

9.4.1.3 Safety Evaluation

No departures or supplements.

9.4.1.4 Inspection and Testing Requirements

No departures or supplements.

9.4.1.5 Instrumentation Requirements

No departures or supplements.

© 2007 UniStar Nuclear Development, LLC. All rights reserved.
COPYRIGHT PROTECTED

9.4.1.6 References

{**NRC, 2001**. Evaluating the Habitability of a Nuclear Power Plant Control Room During a Postulated Hazardous Chemical Release, Regulatory Guide 1.78, Revision 1, U. S. Nuclear Regulatory Commission, December 2001.}

9.4.2 FUEL BUILDING VENTILATION SYSTEM

No departures or supplements.

9.4.3 NUCLEAR AUXILIARY BUILDING VENTILATION SYSTEM

No departures or supplements.

9.4.4 TURBINE BUILDING VENTILATION SYSTEM

No departures or supplements.

9.4.5 SAFEGUARD BUILDING CONTROLLED-AREA VENTILATION SYSTEM

No departures or supplements.

9.4.6 ELECTRICAL DIVISION OF SAFEGUARD BUILDING VENTILATION SYSTEM (SBVSE)

No departures or supplements.

9.4.7 CONTAINMENT BUILDING VENTILATION SYSTEM

No departures or supplements.

9.4.8 RADIOACTIVE WASTE BUILDING VENTILATION SYSTEM

No departures or supplements.

9.4.9 EMERGENCY POWER GENERATING BUILDING VENTILATION SYSTEM

No departures or supplements.

9.4.10 SWITCHGEAR BUILDING VENTILATION SYSTEM

No departures or supplements.

9.4.11 ESSENTIAL SERVICE WATER PUMP BUILDING VENTILATION SYSTEM

No departures or supplements.

~~{The UHS Makeup Water Intake Structure Ventilation System provides an environment suitable for the operation of the UHS Makeup Water System System pumps (refer to Section 9.2.5). The UHS Electrical Building Ventilation System provides an environment suitable for the UHS Makeup Water System's electrical equipment. These systems maintain acceptable temperature conditions in the four pump rooms in the UHS Makeup Water Intake Structure and in the four electrical rooms in the UHS Electrical Building. The UHS Makeup Water Intake Structure Ventilation System and the UHS Electrical Buildiong Ventilation are each comprised of four independent ventilation system trains.}~~

© 2007 UniStar Nuclear Development, LLC. All rights reserved.
COPYRIGHT PROTECTED

~~9.4.11.1 Design Bases~~

~~{The UHS Makeup Water Intake Structure Ventilation System and the UHS Electrical Building Ventilation System maintain acceptable temperature limits to support operation of the UHS Makeup Water Intake System pumps and associated electrical distribution equipment, which are required to operate under design basis accident conditions. The UHS Makeup Water Intake Structure Ventilation System and the UHS Electrical Building Ventilation System maintain a minimum temperature of 41° F (5° C) and a maximum temperature of 104° F (40° C) in the UHS Makeup Water Intake Structure and UHS Electrical Building, respectively. These systems will support operation of the UHS Makeup Water Intake System pumps and associated electrical distribution equipment as well as to support personnel access to these spaces. This temperature range maintains a mild environment in these buildings, as defined in US EPR FSAR Section 3.11.~~

~~Components of the UHS Makeup Water Intake Structure Ventilation System and the UHS Electrical Building Ventilation System are located inside the applicable divisions' UHS Makeup Water Pump rooms and electrical rooms. The UHS Makeup Water Intake Structure and the UHS Electrical Building are designed to withstand the effects of natural phenomena, such as earthquakes, tornadoes, hurricanes, floods, and external missiles (GDC-2).}~~

~~9.4.11.2 System Description~~

~~9.4.11.2.1 General Description~~

~~{A drawing of the UHS Makeup Water Intake Structure Ventilation Systemand the UHS Electrical Building Ventilation System is shown in Figure 9.4-1.~~

~~The UHS Makeup Water Intake Structure Ventilation System recirculates air for cooling or heating of the four UHS Makeup Water System pump rooms in the UHS Makeup Water Intake Structure. The UHS Electrical Building Ventilation System recirculates air for cooling or heating for the four electrical rooms in the UHS Electrical Building. Each pump and electrical room has its own ventilation system train. The ventilation coolers for a particular pump room and associated electrical room are provided with cooling water by the UHS Makeup Water Intake System pump in the associated train.}~~

~~9.4.11.2.2 Component Description~~

~~**{Air Handling Units**~~

~~Air handling unit capacities in the UHS Makeup Water Intake Ventilation System and UHS Electrical Building Ventilation System are based on the environmental conditions and the required room temperature range. Each unit consists of a filter, blower, electric motor, and cooling coil.~~

~~**Ductwork and Accessories**~~

~~The supply air duct is constructed of galvanized steel and is structurally designed for the fan shutoff pressure. The ductwork meets the design, construction and testing requirements of ASME AG-1-2003 (ASME, 2003).~~

~~**Cooling Coils**~~

~~The cooling coils, which are integral to the air handling units, are designed in accordance with ASME AG-1-2003. The cooling coils are designed to meet ASME Boiler and Pressure Vessel Code, Section III, Class 3, 2004 Edition no Addenda (ASME, 2004).~~

© 2007 UniStar Nuclear Development, LLC. All rights reserved.
COPYRIGHT PROTECTED

~~Cooling Coil Isolation Valves~~

~~The cooling coil isolation valves are designed to meet ASME Boiler and Pressure Vessel Code, Section III, Class 3, 2004 Edition, no Addenda.~~

~~Air Handling Unit Condensate Drip Pans~~

~~Each air handling unit has a drip pan installed to collect the condensate that forms in the air handling unit and direct the condensate to the local sump.~~

~~Air Supply Fan~~

~~The fans, which are integral to the air handling units, are centrifugal or axial type with an electrical motor driver. Fan performance is rated in accordance with ANSI/AMCA-210-1999 (ANSI, 1999), ANSI/AMCA-211-1987 (ANSI, 1987), and ANSI/AMCA-300-1985 (ANSI, 1985).~~

~~Electric Heating Coils~~

~~Electric heating coils are provided to maintain minimum room temperatures in the Essential Service Water Pump Building within the design temperature range.}~~

~~9.4.11.2.3 System Operation~~

~~Normal Plant Operation~~

~~{During normal plant operation, the UHS Makeup Water System pumps are not in operation, except for the performance of periodic surveillance tests. The UHS Makeup Water Intake Structure Ventilation System and the UHS Electrical Building Ventilation System function to maintain acceptable room temperatures for starting and operating the UHS Makeup Water System pumps, supporting the operation of the electrical distribution equipment for the UHS Makeup Water System and for personnel comfort. The room temperature is monitored by the temperature sensors for each pump room and electrical room.}~~

~~Abnormal Operating Conditions~~

~~{If one or more components of a UHS Makeup Water Intake Structure Ventilation System train or UHS Electrical Building Ventilation System train fail, the UHS Makeup Water Intake Structure Ventilation System train or UHS Electrical Building Ventilation System train is not able to maintain the required ambient conditions in the UHS Makeup Water System pump room or UHS electrical room, respectively. There are four independent pairs of pump and electrical rooms (each pair is associated with a particular UHS Makeup Water System train). Failure of one train of the UHS Makeup Water Intake Structure Ventilation System or the UHS Electrical Building Ventilation System results in the inoperability of one train of the UHS Makeup Water System. However, this failure does not affect the other three trains of the UHS Makeup Water System.~~

~~Plant Accident Conditions~~

~~The UHS Makeup Water Intake Structure Ventilation System and the UHS Electrical Building Ventilation System also maintain conditions in the UHS Makeup Water Intake Structure and UHS Electrical Building, in case the UHS Makeup Water pumps are required to operate.}~~

~~9.4.11.3 Safety Evaluation~~

~~{The UHS Makeup Water Intake Structure Ventilation System and UHS Electrical Building Ventilation System have sufficient heating and cooling capacity to maintain each pump room and electrical room at temperatures between 41° F and 104° F, when the UHS Makeup Water Intake System pump motors are operated at rated load.~~

© 2007 UniStar Nuclear Development, LLC. All rights reserved.
COPYRIGHT PROTECTED

~~The UHS Makeup Water Intake Structure Ventilation System and the UHS Electrical Building Ventilation System are designed to withstand the effects of earthquakes, tornadoes, hurricanes, floods, external missiles, and other similar natural phenomena. Sections 3.3, 3.4, 3.5, 3.7, and 3.8 provide the bases for the adequacy of the structural design of these buildings.~~

~~No single failure compromises the safety functions of the UHS Makeup Water System; however, active failure of an air conditioning train will render the associated UHS Makeup Water System train inoperable.}~~

~~9.4.11.4 Inspection and Testing Requirements~~

~~No departures or supplements.~~

~~9.4.11.5 Instrumentation Requirements~~

~~{Initial in-place testing of components of the UHS Makeup Water Intake Structure Ventilation System and the UHS Electrical Building Ventilation System is performed in accordance with ASME AG-1-2003 (ASME, 2003) and ASME N510-1989 (ASME, 1989).}~~

~~9.4.11.6 References~~

~~{**ANSI, 1985**. Reverberant Room Method for Sound Testing of Fans, ANSI/AMCA-300-1985, American National Standards Institute/Air Movement and Control Association International, Inc.,1985.~~

~~**ANSI, 1987**. Certified Ratings Program-Product Rating Manual for Fan Air Performance, ANSI/AMCA-211-1987, American National Standards Institute/Air Movement and Control Association International, Inc.,1987.~~

~~**ANSI, 1999**. Laboratory Methods of Testing Fans for Aerodynamic Performance Rating, ANSI/AMCA-210-1999, American National Standards Institute/Air Movement and Control Association International, Inc.,1999.~~

~~**ASME, 1989.** Testing of Nuclear Air-Treatment Systems, ASME N510-1989, American Society of Mechanical Engineers, 1989.~~

~~**ASME, 2003.** Code on Nuclear Air and Gas Treatment, ASME AG-1, American Society of Mechanical Engineers, 2003.~~

~~**ASME, 2004.** ASME Boiler and Pressure Vessel Code, Section III, Class 3, 2004 Edition, no Addenda, American Society of Mechanical Engineers, 2004.}~~

9.4.12 MAIN STEAM AND FEEDWATER VALVE ROOM VENTILATION SYSTEM

No departures or supplements.

9.4.13 SMOKE CONFINEMENT SYSTEM

No departures or supplements.

9.4.14 ACCESS BUILDING VENTILATION SYSTEM

No departures or supplements.

© 2007 UniStar Nuclear Development, LLC. All rights reserved.
COPYRIGHT PROTECTED

9.4.15 ~~ESSENTIAL SERVICE WATER PUMP BUILDING~~ UHS MAKEUP WATER INTAKE STRUCTURE VENTILATION SYSTEM

~~No departures or supplements.~~The section was added as a supplement to the U.S. EPR FSAR.

9.4.15.1 Design Bases

{The UHS Makeup Water Intake Structure Ventilation System and the UHS Electrical Building Ventilation System maintain acceptable temperature limits to support operation of the UHS Makeup Water Intake System pumps and associated electrical distribution equipment, which are required to operate under design basis accident conditions. The UHS Makeup Water Intake Structure Ventilation System and the UHS Electrical Building Ventilation System maintain a minimum temperature of 41° F (5° C) and a maximum temperature of 104° F (40° C) in the UHS Makeup Water Intake Structure and UHS Electrical Building, respectively. These systems will support operation of the UHS Makeup Water Intake System pumps and associated electrical distribution equipment as well as to support personnel access to these spaces. This temperature range maintains a mild environment in these buildings, as defined in US EPR FSAR Section 3.11.

Components of the UHS Makeup Water Intake Structure Ventilation System and the UHS Electrical Building Ventilation System are located inside the applicable divisions' UHS Makeup Water Pump rooms and electrical rooms. The UHS Makeup Water Intake Structure and the UHS Electrical Building are designed to withstand the effects of natural phenomena, such as earthquakes, tornadoes, hurricanes, floods, and external missiles (GDC-2).}

9.4.15.2 System Description

9.4.15.2.1 General Description

{A drawing of the UHS Makeup Water Intake Structure Ventilation Systemand the UHS Electrical Building Ventilation System is shown in Figure 9.4-1.

The UHS Makeup Water Intake Structure Ventilation System recirculates air for cooling or heating of the four UHS Makeup Water System pump rooms in the UHS Makeup Water Intake Structure. The UHS Electrical Building Ventilation System recirculates air for cooling or heating for the four electrical rooms in the UHS Electrical Building. Each pump and electrical room has its own ventilation system train. The ventilation coolers for a particular pump room and associated electrical room are provided with cooling water by the UHS Makeup Water Intake System pump in the associated train.}

9.4.15.2.2 Component Description

{Air Handling Units

Air handling unit capacities in the UHS Makeup Water Intake Ventilation System and UHS Electrical Building Ventilation System are based on the environmental conditions and the required room temperature range. Each unit consists of a filter, blower, electric motor, and cooling coil.

Ductwork and Accessories

The supply air duct is constructed of galvanized steel and is structurally designed for the fan shutoff pressure. The ductwork meets the design, construction and testing requirements of ASME AG-1-2003 (ASME, 2003).

© 2007 UniStar Nuclear Development, LLC. All rights reserved.
COPYRIGHT PROTECTED

Cooling Coils

The cooling coils, which are integral to the air handling units, are designed in accordance with ASME AG-1-2003. The cooling coils are designed to meet ASME Boiler and Pressure Vessel Code, Section III, Class 3, 2004 Edition no Addenda (ASME, 2004).

Cooling Coil Isolation Valves

The cooling coil isolation valves are designed to meet ASME Boiler and Pressure Vessel Code, Section III, Class 3, 2004 Edition, no Addenda.

Air Handling Unit Condensate Drip Pans

Each air handling unit has a drip pan installed to collect the condensate that forms in the air handling unit and direct the condensate to the local sump.

Air Supply Fan

The fans, which are integral to the air handling units, are centrifugal or axial type with an electrical motor driver. Fan performance is rated in accordance with ANSI/AMCA-210-1999 (ANSI, 1999), ANSI/AMCA-211-1987 (ANSI, 1987), and ANSI/AMCA-300-1985 (ANSI, 1985).

Electric Heating Coils

Electric heating coils are provided to maintain minimum room temperatures in the Essential Service Water Pump Building within the design temperature range.}

9.4.15.2.3 System Operation

Normal Plant Operation

{During normal plant operation, the UHS Makeup Water System pumps are not in operation, except for the performance of periodic surveillance tests. The UHS Makeup Water Intake Structure Ventilation System and the UHS Electrical Building Ventilation System function to maintain acceptable room temperatures for starting and operating the UHS Makeup Water System pumps, supporting the operation of the electrical distribution equipment for the UHS Makeup Water System and for personnel comfort. The room temperature is monitored by the temperature sensors for each pump room and electrical room.}

Abnormal Operating Conditions

{If one or more components of a UHS Makeup Water Intake Structure Ventilation System train or UHS Electrical Building Ventilation System train fail, the UHS Makeup Water Intake Structure Ventilation System train or UHS Electrical Building Ventilation System train is not able to maintain the required ambient conditions in the UHS Makeup Water System pump room or UHS electrical room, respectively. There are four independent pairs of pump and electrical rooms (each pair is associated with a particular UHS Makeup Water System train). Failure of one train of the UHS Makeup Water Intake Structure Ventilation System or the UHS Electrical Building Ventilation System results in the inoperability of one train of the UHS Makeup Water System. However, this failure does not affect the other three trains of the UHS Makeup Water System.

Plant Accident Conditions

The UHS Makeup Water Intake Structure Ventilation System and the UHS Electrical Building Ventilation System also maintain conditions in the UHS Makeup Water Intake Structure and UHS Electrical Building, in case the UHS Makeup Water pumps are required to operate.}

© 2007 UniStar Nuclear Development, LLC. All rights reserved.
COPYRIGHT PROTECTED

9.4.15.3 Safety Evaluation

{The UHS Makeup Water Intake Structure Ventilation System and UHS Electrical Building Ventilation System have sufficient heating and cooling capacity to maintain each pump room and electrical room at temperatures between 41° F and 104° F, when the UHS Makeup Water Intake System pump motors are operated at rated load.

The UHS Makeup Water Intake Structure Ventilation System and the UHS Electrical Building Ventilation System are designed to withstand the effects of earthquakes, tornadoes, hurricanes, floods, external missiles, and other similar natural phenomena. Sections 3.3, 3.4, 3.5, 3.7, and 3.8 provide the bases for the adequacy of the structural design of these buildings.

No single failure compromises the safety functions of the UHS Makeup Water System; however, active failure of an air conditioning train will render the associated UHS Makeup Water System train inoperable.}

9.4.15.4 Inspection and Testing Requirements

No departures or supplements.

9.4.15.5 Instrumentation Requirements

{Initial in-place testing of components of the UHS Makeup Water Intake Structure Ventilation System and the UHS Electrical Building Ventilation System is performed in accordance with ASME AG-1-2003 (ASME, 2003) and ASME N510-1989 (ASME, 1989).}

9.4.15.6 References

{**ANSI, 1985**. Reverberant Room Method for Sound Testing of Fans, ANSI/AMCA-300-1985, American National Standards Institute/Air Movement and Control Association International, Inc.,1985.

ANSI, 1987. Certified Ratings Program-Product Rating Manual for Fan Air Performance, ANSI/AMCA-211-1987, American National Standards Institute/Air Movement and Control Association International, Inc.,1987.

ANSI, 1999. Laboratory Methods of Testing Fans for Aerodynamic Performance Rating, ANSI/AMCA-210-1999, American National Standards Institute/Air Movement and Control Association International, Inc.,1999.

ASME, 1989. Testing of Nuclear Air-Treatment Systems, ASME N510-1989, American Society of Mechanical Engineers, 1989.

ASME, 2003. Code on Nuclear Air and Gas Treatment, ASME AG-1, American Society of Mechanical Engineers, 2003.

ASME, 2004. ASME Boiler and Pressure Vessel Code, Section III, Class 3, 2004 Edition, no Addenda, American Society of Mechanical Engineers, 2004.}

© 2007 UniStar Nuclear Development, LLC. All rights reserved.
COPYRIGHT PROTECTED

Figure 9.4-1—{UHS Makeup Water Intake Structure Ventilation System and UHS Electrical Building Ventilation System}

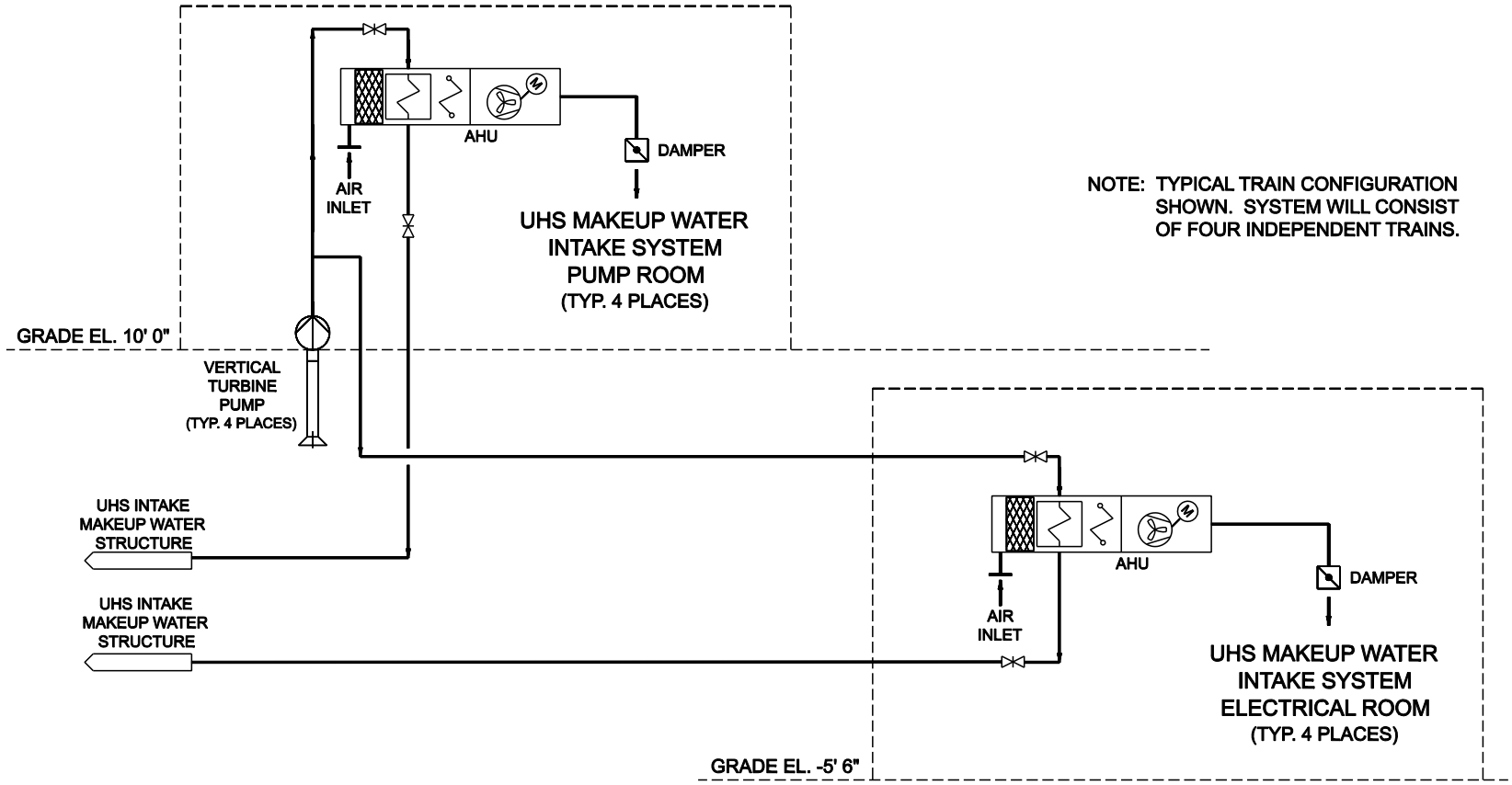

© 2007 UniStar Nuclear Development, LLC. All rights reserved.
COPYRIGHT PROTECTED
FSAR Section 9.0

9.5 OTHER AUXILIARY SYSTEMS

This section of the U.S. EPR FSAR is incorporated by reference with the following supplements.

9.5.1 FIRE PROTECTION SYSTEM

No departures or supplements.

9.5.1.1 Design Basis

Appendix 9B of this COL FSAR supplements Appendix 9A of the U.S. EPR FSAR.

9.5.1.2 System Description

9.5.1.2.1 General Description

For all aspects of the site specific Fire Protection Program (FPP), the same codes and standards and applicable edition years apply for fire protection as listed in Section 9.5.1.7 of the U.S. EPR FSAR.

Table 9.5-1 provides supplemental information for select items/statements in U.S. EPR FSAR Table 9.5.1-1 identified as requiring COL Applicant input. The supplemental information is in a column headed {"CCNPP Unit 3 Supplement"} and addresses {CCNPP Unit 3} conformance to the identified requirement of Regulatory Guide 1.189 (NRC, 2007).

Plant Fire Prevention and Control Features

Plant Arrangement

The site building layout is shown in Figure 2.1-1. An enlargement of the power block area is provided in Figure 2.1-5. Details of the arrangement of the Turbine Building, Switchgear Building, Auxiliary Power Transformer Area, Generator Transformer Area (the remaining power block structures) and non-power block structures are provided in Appendix 9B of this COL application.

Architectural and Structural Features

Details of the architectural/structural design features for the remainder of the power block and balance of plant structures/areas are provided in Appendix 9B of this COL application.

Electrical System Design and Electrical Separation

Details of the electrical system design/separation for the remainder of the power block and balance of plant structures/areas are provided in Appendix 9B of this COL application.

Fire Safe Shutdown Capability

The remainder of the plant is separated from portions of the facility containing fire safe shutdown systems or components by appropriately rated fire barriers and/or distance. These remaining areas do not contain fire safe shutdown systems or components. This is detailed in Appendix 9B of this COL application.

Ventilation System Design Considerations

Details of the ventilation system for the remainder of the power block and balance of plant structures are provided in Appendix 9B of this COL application.

Smoke confinement/smoke control is not provided in other structures/areas of the plant.

© 2007 UniStar Nuclear Development, LLC. All rights reserved.
COPYRIGHT PROTECTED

Fire Detection and Alarm System

Details of the fire detection and alarm system for the remainder of the power block and balance of plant structures are provided in Appendix 9B of this COL application.

Fire Water Supply System

{Suction storage tank makeup is supplied from the desalinization plant which ultimately draws suction from the Chesapeake Bay. The fire protection water supply is treated to potable quality to help prevent occurrence of biological fouling or corrosion.} The rate of makeup flow to the fire water storage tanks is sufficient to refill the minimum fire protection volume in one tank within eight hours.

In addition, the highest sprinkler system demand is for the Turbine Building and is {2400 gpm at 161 psig}. The highest standpipe system demand is for the Containment Building and is {1250 gpm at 176 psig}.

Automatic Fire Suppression Systems

Details of the automatic fire suppression systems for the remainder of the power block and balance of plant structures are provided in Appendix 9B of this COL application.

In addition, automatic sprinkler systems, designed and installed in accordance with National Fire Protection Association (NFPA) 15 (NFPA, 2007a), are provided for the following buildings:

- Turbine Building under operating deck and skirt areas
- SBO Diesel Tank Rooms
- SBO Auxiliary Equipment Rooms
- Switchgear Building Diesel Engine Rooms
- Auxiliary Boiler Equipment Room
- {Warehouse Building
- Central Gas Supply Building}
- Fire Protection Building
- {UHS Makeup Water Intake Structure
- Desalinization / Water Treatment Building}

Automatic single or double interlock preaction sprinkler systems designed and installed in accordance with NFPA 13 (NFPA, 2007b) are provided in the following areas:

- Turbine Generator and Exciter bearings
- Switchgear Building Cable Spreading Rooms
- Switchgear Building Low- and Medium-Voltage Distribution Board Rooms
- Switchgear Building Cable Distribution Division Rooms

© 2007 UniStar Nuclear Development, LLC. All rights reserved.
COPYRIGHT PROTECTED

- Switchgear Building Battery Rooms
- Switchgear Building Battery Charger Rooms
- Switchgear Building I&C Control / Protection Panel Rooms
- {Ultimate Heat Sink Electrical Building}

Fixed deluge water spray systems designed and installed in accordance with NFPA 15 are provided for the following hazards.

- Hydrogen seal oil unit
- Turbine Building Lube oil drain trenches
- Auxiliary Power Transformers
- Generator Transformers

Manual Fire Suppression Systems

Details of the manual fire suppression systems for the remainder of the power block and balance of plant structures are provided in Appendix 9B of this COL application.

9.5.1.3 Safety Evaluation – Fire Protection Analysis

Appendix 9B addresses the fire protection analysis for the remaining power block and balance of plant structures.

In addition, the plant will maintain an integrated fire hazards analysis (FHA) and supporting evaluations that demonstrate that the plant can:

- achieve and maintain post-fire safe shutdown conditions for a fire in any fire area of the plant, including alternative shutdown fire areas,
- maintain safe plant conditions and minimize potential release of radioactive material in the event of a fire during any plant operating mode,
- detail the plant fire prevention, detection, suppression, and containment features, for each fire area containing structures, systems and components (SSCs) important to safety, and
- achieve and maintain these safe conditions with due consideration of plant fire risk as characterized in the plant-specific fire probabilistic risk assessment (Fire PRA).

9.5.1.4 Inspection and Testing Requirements

The FPP includes procedures for testing fire protection features and systems and includes criteria to ensure design and system readiness. This includes installation and acceptance testing, periodic testing, quality assurance oversight of testing, and proper test documentation.

All fire protection features and systems will be surveilled, inspected, tested, and maintained in accordance with applicable codes and standards of the NFPA including start-up and

© 2007 UniStar Nuclear Development, LLC. All rights reserved.
COPYRIGHT PROTECTED

acceptance tests. The frequency of follow-up inspections and tests will also follow NFPA requirements and ALARA guidelines.

All surveillance, inspection, testing and maintenance is conducted and documented in accordance with approved plant procedures and is performed by qualified personnel.

9.5.1.5 Fire Probabilistic Risk Assessment

No departures or supplements.

9.5.1.6 Fire Protection Program

No departures or supplements.

9.5.1.6.1 Fire Prevention

Governance and control of FPP attributes is provided through policies, procedures, and the {UniStar Nuclear} Quality Assurance Program Description. Procedures are in place for FPP impacting activities including:

- In-situ and transient combustibles.
- Ignition sources.
- Hot Work.
- Annunciator response and pre-fire plans.
- Surveillance, inspection, testing, and maintenance (as applicable) of:
  - Passive fire barriers including opening protectives (i.e., fire doors, fire dampers, and through penetration seal systems).
  - Fire protection water supply system.
  - Automatic and manual fire suppression systems and equipment.
  - Automatic and manual fire detection/fire alarm system equipment.
  - Fire brigade and fire response equipment.

9.5.1.6.2 Fire Protection Program

The FPP organization is shown in Figure 9.5-1. The ultimate responsibility for the FPP rests with the {Chief Nuclear Officer, UniStar Nuclear Operating Services.} The responsibilities, lines of authority, training and qualifications by title/position are detailed in administrative procedures and the {UniStar Nuclear} Quality Assurance Program Description. Key positions are described below. The qualifications required for key positions are provided in Section 9.5.1.6.3.

The {Onsite Engineering Manager} has the overall responsibility for development and ongoing assessment of the FPP. A qualified fire protection engineer (FPE) is delegated the responsibility to administer and implement the FPP through procedures governing fire prevention, combustible material control, ignition source control, automatic and manual fire suppression systems, manual fire response equipment, evaluation of work for impact on the FPP, pre-fire

© 2007 UniStar Nuclear Development, LLC. All rights reserved.
COPYRIGHT PROTECTED

planning, and identification of fire protection training requirements for plant personnel including general employees, fire brigade, and contract employees/contractors. The FPE is assisted through the assignment of responsibility for individual portions of the FPP to various departments as defined in administrative procedures.

The {Operations Shift Supervisor} has the responsibility for ensuring that fire safety and administration of applicable fire protection controls are maintained for all modes of plant operation. In the event of a fire in the plant, the {Operations Shift Supervisor} is the incident command authority for coordinating fire response and plant operational/shutdown activities unless and until relieved under the Emergency Plan.

Quality assurance oversight of the FPP rests with the Quality and Performance Improvement organization in accordance with the {UniStar Nuclear} Quality Assurance Program Description.

9.5.1.6.3 Fire Protection Training and Personnel Qualifications

Fire Protection Engineer

No departures or supplements.

Fire Brigade Members

No departures or supplements.

Fire Protection System Operation, Testing, and Maintenance

Personnel who perform operation of or surveillance, inspection, test, and/or maintenance activities on fire-protection related structures, systems, or components are trained in the specific activities they are required to perform. Training is conducted through one or more of the following: factory or shop training on individual equipment, recognized apprentice and/or journeyman training courses, training coursework on equipment of similar type or experience-based training and qualification on fire systems in general. All personnel who perform fire protection related maintenance will be trained in conformance to plant procedures and in fire protection feature/system impairment procedures.

Training of the Fire Brigade

No departures or supplements.

General Employee Training

This training is required for all personnel who are granted unescorted plant access. General employee training curriculum provides an overview of the requirements of the FPP including: general fire hazards within the plant, the defense-in-depth objectives of the FPP, and an introduction to the FPP procedures that govern employee actions including appropriate steps to be taken upon discovering a significant fire hazard, actions to be taken upon discovering a fire or hearing/seeing a fire alarm, and combustible material and ignition source controls.

Fire Watch Training

Fire Watch – Hot Work

This training is required for all plant and/or contract personnel assigned duties as a fire watch for hot work. Hot work fire watch training includes training on hot work permitting, hot worker safety, requirements for inspection and authorization for hot work, emergency communication/notification, transfer of fire watch responsibilities, post-work inspection

© 2007 UniStar Nuclear Development, LLC. All rights reserved.
COPYRIGHT PROTECTED

requirements, and hot work recordkeeping requirements. All fire watches are trained in the selection, limitations, and use/application of hand portable fire extinguishers.

Fire Watch – Compensatory Measures

This training is required for all plant and/or contract personnel assigned duties as a fire watch compensating for the inoperability or impairment of a given fire protection system or feature. Compensatory measure fire watch training includes training on impairment procedures, safety functions of fire protection related systems and features and how these functions are degraded, plant features typically being compensated for, emergency communication/ notification, transfer of fire watch responsibilities, restoration from compensatory fire watch, and recordkeeping requirements. All compensatory measure fire watches are trained in the selection, limitations, and use/application of hand portable fire extinguishers.

9.5.1.6.4 Fire Brigade Organization, Training, and Records

Fire Brigade equipment including personal protective equipment for structural firefighting is provided for the plant fire brigade. Each fire brigade member is equipped with a helmet (with face shield), turnout coat, turnout pants, footwear, gloves, protective hood, personal alert safety system (PASS) device, and self-contained breathing apparatus (SCBA). All equipment will conform to appropriate NFPA standard. The plant maintains an adequate inventory of firefighting equipment to ensure outfitting of a full complement of brigade members with consideration of the possibility of sustained fire response operations (multiple crews).

SCBA are required to be worn for interior fire response activities and at similar times when fire/ response activities may involve a risk of chemical, particulate, and/or radiological material inhalation exposure.

Other types of fire response equipment are distributed and/or cached at various locations throughout the plant to support response by the plant fire brigade and/or off-site response agencies. The types of equipment provided include fire hose (2-1/2 and 1-1/2 inch diameter), combination and specialty hose nozzles, portable smoke removal equipment, spill control and absorbent materials, supplemental hand portable fire extinguishers, aqueous film-forming foam (AFFF) supply and foam eductors, and other specialty tools.

The plant has procedural controls in place to govern the response to fires. This includes fire annunciator response procedures and pre-fire plans which provide direction for the Control Room to determine: the need to initiate plant safe shutdown, the actions to take to effect shutdown, the mobilization and response of Control Room operators, and the mobilization and response of the plant Fire Brigade to effect fire-fighting activities. These procedures are utilized, in conjunction with the Emergency Plan, to determine when conditions necessitate:

- Requesting support of off-site emergency response resources.
- The declaration and escalation of the fire occurrence as a plant emergency.
- The notification of local, state, and federal governmental agencies.

9.5.1.6.5 Quality Assurance

The {UniStar Nuclear} Quality Assurance Program Description has appropriate provisions to govern the quality attributes of the FPP. The FPP conforms to the applicable provisions of 10 CFR 50, Appendix B (CFR, 2008) and with the quality assurance guidance in Regulatory Guide 1.189.

© 2007 UniStar Nuclear Development, LLC. All rights reserved.
COPYRIGHT PROTECTED

Audits of the FPP will be performed at the recommended frequencies by an audit team staffed and led by qualified QA and technical auditors.

Additional details of the quality assurance program are provided in Section 17.5.

9.5.1.7 References

{**NFPA, 2007a**. Standard for Water Spray Fixed Systems for Fire Protection, NFPA 15, National Fire Protection Association, 2007.

NFPA, 2007b. Standard for the Installation of Sprinkler Systems, NFPA 13, National Fire Protection Association, 2007.

NRC, 2007. Fire Protection for Nuclear Power Plants, Revision 1, Regulatory Guide 1.189, Revision 1, U. S. Nuclear Regulatory Commission, March 2007.}

© 2007 UniStar Nuclear Development, LLC. All rights reserved.
COPYRIGHT PROTECTED

Table 9.5-1—Fire Protection Program Compliance with Regulatory Guide 1.189
(Page 1 of 8)

R.G. Section	Regulatory Guide 1.189 "C. Regulatory Position"[1]	Compliance[2]	U.S. EPR Comment	{CCNPP Unit 3} Supplement
C.1	Fire Protection Program	Compliance		The Fire Protection Program (FPP) is consistent with the requirements of Regulatory Guide 1.189 and SRP 9.5-1. Details of the FPP are provided in this COL application.
C.1.1	Organization, Staffing, and Responsibilities	Compliance		The FPP organization is shown in Figure 9.5-1. The responsibilities, lines of authority, training and qualifications by title/position are detailed in administrative procedures and the {UniStar Nuclear} Quality Assurance Program Description.
C.1.2	Fire Hazards Analysis	Compliance	See Fire Protection Analysis Appendix 9A	Appendix 9A of the U.S. EPR FSAR provides the technical analysis for the nuclear island and demonstrates that the EPR has the ability to achieve and maintain safe-shutdown and to minimize the release of radioactive materials to the environment. Appendix 9B is an analysis detailing fire hazards and fire protection attributes for the remainder of the plant. Other structures not listed will be confirmed as not posing fire/explosion risk to the plant using NFPA 80A criteria.
C1.3	Safe Shutdown Analysis	Compliance		The plant will develop and maintain an integrated, detailed site-specific FHA and will have detailed procedures and training to ensure fire-safe shutdown and other fire safe conditions required to minimize radioactive material release are achieved and maintained.
C.1.4	Fire Test Reports and Fire Data	Compliance		If untested barrier configurations are determined necessary during detailed design, they will be evaluated consistent with RG 1.189 requirements.
C.1.5	Compensatory Measures	Compliance		The FPP will apply compensatory measures consistent with RG 1.189 recommendations and standard industry practice whenever fire protection features are degraded and/or inoperable. Compensatory measures will be applied when necessary to accomplish repair or modification or as a result of findings during inspection or surveillance. Fire watches, temporary fire barriers, or backup suppression capability will be implemented, as applicable. Where an uncommon type of compensatory measure is warranted, an evaluation of the alternative will be conducted prior to implementation. Such evaluation will incorporate fire risk insights as applicable.
C.1.6	Fire Protection Training and Qualifications	Compliance		The FPP Organization is shown in Figure 9.5-1.
C.1.6.1	Fire Protection Staff Training and Qualifications	Compliance		The responsibilities, lines of authority, training and qualifications by title/position are detailed in administrative procedures and the {UniStar Nuclear} Quality Assurance Program Description.

© 2007 UniStar Nuclear Development, LLC. All rights reserved.
COPYRIGHT PROTECTED

Table 9.5-1—Fire Protection Program Compliance with Regulatory Guide 1.189
(Page 2 of 8)

R.G. Section	Regulatory Guide 1.189 "C. Regulatory Position"[1]	Compliance[2]	U.S. EPR Comment	{CCNPP Unit 3} Supplement
C.1.6.2	General Employee Training	Compliance		General employee training includes instruction on actions to take upon discovery of a fire, hearing a fire alarm, and proper fire preventative and protective administrative controls and actions.
C.1.6.3	Fire Watch Training	Compliance		Fire watch training includes instruction on responsibilities, actions, and records for oversight of hot work and when serving as compensatory measure for degraded fire protection feature.
C.1.6.4	Fire Brigade Training and Qualifications	Compliance		The fire brigade will have at least five members available on each shift above the minimum shift complement for safe operation/shutdown. The brigade is trained and equipped to respond to fire-related emergencies.
C.1.6.4.1	Qualifications	Compliance		The fire brigade will be under the direction of the Shift Supervisor. A Fire Brigade Leader is assigned and qualified to command response to fire emergencies. A minimum of three operations staff members including one licensed operator will be assigned to the shift fire brigade. Fire brigade members are required to be physically fit and undergo an annual physical examination for initial and continuing brigade membership.
C.1.6.4.2	Instruction	Compliance		Fire brigade members are trained in nuclear facility fire response strategy and tactics by qualified trainers using both classroom and hands-on instruction. The training curriculum is detailed in an administrative procedure. Refresher training is structured to ensure that the entire curriculum is repeated every two years.
C.1.6.4.3	Fire Brigade Practice	Compliance		Brigade practice sessions are scheduled to ensure that each member attends at least one session per year.
C.1.6.4.4	Fire Brigade Training Records	Compliance		Brigade training records will be retained for a minimum of three years.
C.1.7	Quality Assurance	Compliance		The {UniStar Nuclear Energy} Quality Assurance Program Description Section V has appropriate provisions to govern the quality attributes of the fire protection program. The FPP conforms to the applicable provisions of 10 CFR 50, Appendix B and with the quality assurance guidance in RG 1.189.
C.1.7.1	Design and Procurement Document Control	COL Applicant	Note 3	Design and Procurement Document Control shall be in accordance with Section V of the {UniStar Nuclear Energy} Quality Assurance Program Description. Fire protection quality requirements are included in plant configuration control processes.

© 2007 UniStar Nuclear Development, LLC. All rights reserved.
COPYRIGHT PROTECTED

Table 9.5-1—Fire Protection Program Compliance with Regulatory Guide 1.189
(Page 3 of 8)

R.G. Section	Regulatory Guide 1.189 "C. Regulatory Position"[1]	Compliance[2]	U.S. EPR Comment	{CCNPP Unit 3} Supplement
C.1.7.2	Instructions, Procedures, and Drawings	COL Applicant	Note 3	The FPP provides instruction and procedures to control fire prevention and firefighting; design, installation, inspection, test, maintenance and modification of fire protection features/systems; and appropriate administrative controls in accordance with Section V of the {UniStar Nuclear Energy} Quality Assurance Program Description.
C.1.7.3	Control of Purchased Material, Equipment, and Services	COL Applicant	Note 3	The FPP provides procedures to control procurement of fire protection related items to ensure proper evidence of quality in accordance with Section V of the {UniStar Nuclear Energy} Quality Assurance Program Description.
C.1.7.4	Inspection	Compliance		The FPP includes procedures for independent inspection of fire protection-related activities including installation and/or maintenance of features including FP systems, emergency lighting and communication, cable routing, and fire barriers and opening protectives in accordance with Section V of the {UniStar Nuclear Energy} Quality Assurance Program Description.
C.1.7.5	Test and Test Control	Compliance		The FPP includes procedures for testing fire protection features and systems and includes criteria to ensure design and system readiness. This includes installation and acceptance testing, periodic testing, quality assurance oversight of testing, and proper test documentation in accordance with Section V of the {UniStar Nuclear Energy} Quality Assurance Program Description.
C.1.7.6	Inspection, Test, and Operating Status	Compliance		Fire protection features and systems are provided with suitable marking and labeling to indicate acceptance and readiness for operation in accordance with Section V of the {UniStar Nuclear Energy} Quality Assurance Program Description.
C.1.7.7	Non-conforming Items	Compliance		The FPP includes procedures for identification and control of items that do not conform to specified requirements, are inoperable or otherwise unsuitable. This includes tagging or labeling, notification and dispositioning of the nonconforming item in accordance with Section V of the {UniStar Nuclear Energy} Quality Assurance Program Description.
C.1.7.8	Corrective Action	Compliance		The plant has an administrative procedure to ensure that proper corrective actions are taken for conditions adverse to fire protection including root cause analysis when appropriate in accordance with Section V of the {UniStar Nuclear Energy} Quality Assurance Program Description.

© 2007 UniStar Nuclear Development, LLC. All rights reserved.
COPYRIGHT PROTECTED

Table 9.5-1—Fire Protection Program Compliance with Regulatory Guide 1.189
(Page 4 of 8)

R.G. Section	Regulatory Guide 1.189 "C. Regulatory Position"[1]	Compliance[2]	U.S. EPR Comment	{CCNPP Unit 3} Supplement
C.1.7.9	Records	Compliance		The FPP includes provisions for preparing and maintaining retrievable records that demonstrate conformance to fire protection requirements in accordance with Section V of the {UniStar Nuclear Energy} Quality Assurance Program Description.
C.1.7.10	Audits	Compliance		The FPP requires that audits be performed at the appropriate periodicity by qualified fire protection and QA personnel to verify that the program is being properly implemented and that compliance to fire protection requirements is being met in accordance with Section V of the {UniStar Nuclear Energy} Quality Assurance Program Description.
C.1.7.10.1	Annual Fire Protection Audit	Compliance		An annual audit will be performed consistent with R.G. 1.189.
C.1.7.10.2	24-Month Fire Protection Audit	Compliance		A biennial audit will be performed consistent with R.G. 1.189 and Section V of the {UniStar Nuclear Energy} Quality Assurance Program Description.
C.1.7.10.3	Triennial Fire Protection Audit	Compliance		A triennial audit will be performed consistent with R.G. 1.189 and Section V of the {UniStar Nuclear Energy} Quality Assurance Program Description. Independent auditors will be used to perform triennial audits.
C.1.8	Fire Protection Program Changes/ Code Deviations	COL Applicant	Note 3	Compliance - If program changes or deviations are required, the plant will use risk-informed, performance-based methodologies consistent with R.G. 1.174 to evaluate and justify changes/ deviations.
C.1.8.1	Change Evaluations	COL Applicant	Note 3	Compliance - FPP program changes will be evaluated consistent with 10 CFR 50.59 and the applicable change processes in 10 CFR 52.
C.1.8.5	10 CFR 50.72 Notification and 10 CFR 50.73 Report	COL Applicant	Note 3	Compliance - the plant will report fire events and any fire protection program deficiencies consistent with 10 CFR 50.72 and 10 CFR 50.73.
C.1.8.7	Fire Modeling	COL Applicant	Note 3	Compliance - If fire models are used to evaluate changes, the plant will apply models consistent with R.G. 1.189 including limitations on their use and adequate verification and validation (as required).
C.2	Fire Prevention	Compliance		The FPP includes procedures to ensure minimization of fire hazards in areas important to safety for anticipated operating conditions and to ensure fire safety as part of facility modifications.
C.2.1	Control of Combustibles	Compliance		The FPP includes procedures to control transient combustibles consistent with the Fire Hazards Analysis and good fire prevention practices.
C.2.1.1	Transient Fire Hazards	Compliance		The FPP includes procedures to control transient combustibles consistent with the Fire Hazards Analysis and good fire prevention practices.

© 2007 UniStar Nuclear Development, LLC. All rights reserved.
COPYRIGHT PROTECTED

Table 9.5-1—Fire Protection Program Compliance with Regulatory Guide 1.189
(Page 5 of 8)

R.G. Section	Regulatory Guide 1.189 "C. Regulatory Position"[1]	Compliance[2]	U.S. EPR Comment	{CCNPP Unit 3} Supplement
C.2.1.2	Modifications	Compliance		The FPP includes procedures to ensure that fire prevention and fire safety practices are maintained and that the facility fire safety design basis is not negatively impacted.
C.2.1.3	Flammable and Combustible Liquids and Gases	Compliance		The FPP includes procedures to ensure flammable and combustible liquids and gases are handled properly and consistent with the facility design basis.
C.2.1.4	External/Exposure Fire Hazards	Compliance		The FPP includes procedures to ensure that any adjacent or external facilities to areas important to safety are evaluated consistent with NFPA 80A and for impact on the facility Fire Hazards Analysis.
C.2.2	Control of Ignition Sources	Compliance		The FPP includes procedures for control of ignition sources. The facility design follows recognized codes, standards, and practices to minimize ignition hazards.
C.2.2.1	Open Flame, Welding, Cutting, and Grinding (Hot Work)	Compliance		The FPP includes procedures for issuance of hot work permits and to control the designation of fixed weld shop areas or similar.
C.2.2.2	Temporary Electrical Installations	Compliance		The FPP includes procedures to monitor and control the use of temporary electrical installations for routine and outage related maintenance consistent with recognized standards and practices.
C.2.2.3	Other Sources	Compliance		The FPP includes procedures to monitor and control other non-routine ignition hazards such as temporary heating, leak testing, tar kettles, heat guns, and similar devices/operations.
C.2.3	Housekeeping	Compliance		The FPP includes procedures for routine housekeeping and monitoring areas important to safety for prompt removal of combustibles.
C.2.4	Fire Protection System Maintenance and Impairments	Compliance		The FPP includes procedures to ensure fire protection features and systems are maintained in accordance with applicable reference standards and other regulatory guidance. Fire system and feature impairments are controlled by a permit system authorized by a qualified individual.
C.3.5	Manual Firefighting Capabilities	Compliance		See below
C.3.5.1	Fire Brigade	Compliance		The Fire Brigade consists of at least five members available on each shift above the minimum shift complement for safe operation/shutdown. The brigade is trained and equipped to respond to fire-related emergencies.
C.3.5.1.1	Fire Brigade Staffing	Compliance		The Fire Brigade consists of at least five members available on each shift above the minimum shift complement for safe operation/shutdown. The on-duty {Shift Supervisor} is not a member of the fire brigade.

© 2007 UniStar Nuclear Development, LLC. All rights reserved.
COPYRIGHT PROTECTED

Table 9.5-1—Fire Protection Program Compliance with Regulatory Guide 1.189
(Page 6 of 8)

R.G. Section	Regulatory Guide 1.189 "C. Regulatory Position"[1]	Compliance[2]	U.S. EPR Comment	{CCNPP Unit 3} Supplement
C.3.5.1.2	Equipment	Compliance		The Fire Brigade is suitably outfitted and equipped for interior structural firefighting activities. PPE and related fire brigade equipment conforms with and is maintained per recognized standards. This includes turnout gear and self-contained breathing apparatus and equipment including hoses, nozzles, smoke ejectors, and other specialized equipment. Equipment maintenance and inspection is performed per plant procedure.
C.3.5.1.3	Procedures and Prefire Plans	Compliance		The Fire Brigade and fire response activities are conducted in accordance with annunciator response procedures, pre-fire plans, and related fire response procedures which address strategies and tactics typical to nuclear power plant fire response.
C.3.5.1.4	Performance Assessment/Drill Criteria	Compliance		The Fire Brigade will drill at least quarterly. At least one annual drill will be unannounced and one drill will be on a back shift. Drills will be scheduled to ensure that all brigade members participate in minimum of two drills per year. Drills are based on prepared drill and tabletop guides and will be critiqued by knowledgeable plant staff to ensure that fire response objectives are being met. An independent reviewer will be included at least once every three years.
C.3.5.2	Offsite Manual Firefighting Resources	Compliance		Offsite fire department response is governed through a mutual aid agreement with offsite fire departments. The offsite fire departments are included in pertinent training on the hazards of the facility and participate in a minimum of one drill per year on-site.
C.3.5.2.1	Capabilities	Compliance		The offsite fire department equipment is compatible with the plant equipment and/or adapters are provided and available when required.
C.3.5.2.2	Training	Compliance		The offsite fire departments are included in pertinent training on the hazards of and response within the facility including radiological and operational hazards; site access/ security; and roles, responsibilities and authorities including command and response structure.
C.3.5.2.3	Agreement/Plant Exercise	Compliance		The plant will establish written mutual aid agreements with off-site fire departments to provide response support to the fire brigade. Said agreements will address authorities and command responsibilities and will provide for periodic participation/joint training including annual drills and participation in radiological emergency response plan exercises.

© 2007 UniStar Nuclear Development, LLC. All rights reserved.
COPYRIGHT PROTECTED

Table 9.5-1—Fire Protection Program Compliance with Regulatory Guide 1.189
(Page 7 of 8)

R.G. Section	Regulatory Guide 1.189 "C. Regulatory Position"[1]	Compliance[2]	U.S. EPR Comment	{CCNPP Unit 3} Supplement
C.4.1.7	Communications	Compliance		The Fire Brigade will utilize portable radios for communications during fire response. This system is arranged to not conflict with other site radio communications and to provide reliable, comprehensive coverage for the site. The radio system is the primary means of communication for fire brigade operations. Secondary communications are available to the fire brigade via the plant primary and wireless telephone systems and by the plant public address system.
C.5.5	Post-Fire Safe-Shutdown Procedures	COL Applicant	Note 3	Compliance - The plant will have detailed procedures and training to ensure fire-safe shutdown and other fire-safe conditions required to minimize radioactive material release are achieved and maintained.
C.5.5.1	Safe-Shutdown Procedures	COL Applicant	Note 3	Compliance - See C.5.5
C.5.5.2	Alternative/Dedicated Shutdown Procedures	COL Applicant	Note 3	Compliance - See C.5.5
C.5.5.3	Repair Procedures	COL Applicant	Note 3	Compliance - Consistent with the U.S. EPR FSAR, the plant does not permit repairs to achieve hot or cold shutdown conditions; procedures are not required.
C.6.1.6	Alternative/Dedicated Shutdown Panels	Compliance		The FPP includes procedures to control transient combustibles consistent with the Fire Hazards Analysis and good fire prevention practices.
C.6.2.4	Independent Spent Fuel Storage Areas	COL Applicant	Note 3	Compliance – No Independent Spent Fuel Storage Areas are planned for the plant at this time and are not included in this COL application.
C.6.2.6	Cooling Towers	COL Applicant	Note 3	Compliance - Essential Service Water Cooling Towers are addressed in Appendix 9A. {The Cooling Tower Structure is addressed in Appendix 9B.}
C.7.6	Nearby Facilities	COL Applicant	Note 3	Compliance - Appendix 9A of the U.S. EPR FSAR provides the technical analysis for the nuclear island and related power block structures and demonstrates that the EPR has the ability to achieve and maintain safe-shutdown and to minimize the release of radioactive materials to the environment. FSAR Appendix 9B of this COL application provides an analysis of fire hazards and details fire protection attributes for the remainder of the plant.

© 2007 UniStar Nuclear Development, LLC. All rights reserved.
COPYRIGHT PROTECTED

Table 9.5-1—Fire Protection Program Compliance with Regulatory Guide 1.189
(Page 8 of 8)

R.G. Section	Regulatory Guide 1.189 "C. Regulatory Position"[1]	Compliance[2]	U.S. EPR Comment	{CCNPP Unit 3} Supplement
C.8.4	Applicable Industry Codes and Standards	Compliance		The FPP will conform to the codes and standards and applicable edition years listed in Section 9.5.1.7 of the U.S. EPR FSAR.
C.8.6	Fire Protection Program Implementation Schedule	Compliance		The required elements of the FPP are fully operational prior to receipt of new fuel for buildings storing new fuel and adjacent areas that could affect the fuel storage area at the plant. Other required elements of the FPP described in FSAR Section 9.5.1 are fully operational prior to initial fuel loading at.

Notes:

1. The scope of the Regulatory Position presented in this compliance comparison table is abbreviated, due to the depth of detail contained within the Regulatory Position Appendix C itself. The user should refer to Regulatory Guide 1.189 directly for the text portion of each section addressed by the table.

2. The U.S. EPR compliance to the regulatory positions delineated in Regulatory Guide 1.189, "Fire Protection for Nuclear Power Plants," is as indicated by the following definitions:

   - COL Applicant – The COL Applicant will address the subject regulatory position.

   - Compliance – The U.S. EPR design supports compliance with the subject regulatory position.

3. A COL Applicant that references the U.S. EPR design certification will submit site specific information to address the Regulatory Position.

© 2007 UniStar Nuclear Development, LLC. All rights reserved.
COPYRIGHT PROTECTED

9.5.2 COMMUNICATION SYSTEM

No departures or supplements.

9.5.2.1 Design Basis

No departures or supplements.

9.5.2.2 System Description

No departures or supplements.

9.5.2.3 System Operation Communications Stations

The U. S. EPR FSAR includes the following COL Item in Section 9.5.2.3:

> The COL applicant referencing the U.S. EPR certified design will identify additional site-specific communication locations necessary to support effective communication between plant personnel in all vital areas of the plant during normal operation, as well as during accident conditions.

This COL Item is addressed as follows:

{The UHS Makeup Water Intake Structure and the UHS Electrical Building contains safety-related equipment and is a site-specific vital area of the plant. Communication equipment will be provided in this area to support effective communication between plant personnel during normal operation, as well as during accident conditions. This location will contain equipment to allow use of the plant digital telephone system, PA and alarm system, and sound powered system. A portable wireless communication system will also be provided for use by fire brigade and other operations personnel required to achieve safe plant shutdown.

All the communication subsystems are available for use during normal operation of the plant. Except for the sound-powered system, the communication subsystems are powered from the Class 1E Emergency Uninterruptible Power Supply System (EUPS) or the Class 1E Emergency Power Supply System (EPSS), which are supported by the emergency and station blackout diesel generators to provide backup power. Hence all the communication subsystems are expected to be available for use during all accident conditions. However, all communications equipment is categorized as non-safety related, and is not relied upon to mitigate an accident. The sound-powered system does not require an external power source.}

9.5.2.4 Inspection and Testing Requirements

No departures or supplements.

9.5.2.5 References

No departures or supplements.

9.5.3 LIGHTING SYSTEM

No departures or supplements.

9.5.4 DIESEL GENERATOR FUEL OIL STORAGE AND TRANSFER SYSTEM

No departures or supplements.

© 2007 UniStar Nuclear Development, LLC. All rights reserved.
COPYRIGHT PROTECTED

9.5.5 DIESEL GENERATOR COOLING WATER SYSTEM

No departures or supplements.

9.5.6 DIESEL GENERATOR STARTING AIR SYSTEM

No departures or supplements.

9.5.7 DIESEL GENERATOR LUBRICATING SYSTEM

No departures or supplements.

9.5.8 DIESEL GENERATOR AIR INTAKE AND EXHAUST SYSTEM

No departures or supplements.

© 2007 UniStar Nuclear Development, LLC. All rights reserved.
COPYRIGHT PROTECTED

Figure 9.5-1—Fire Protection Organization

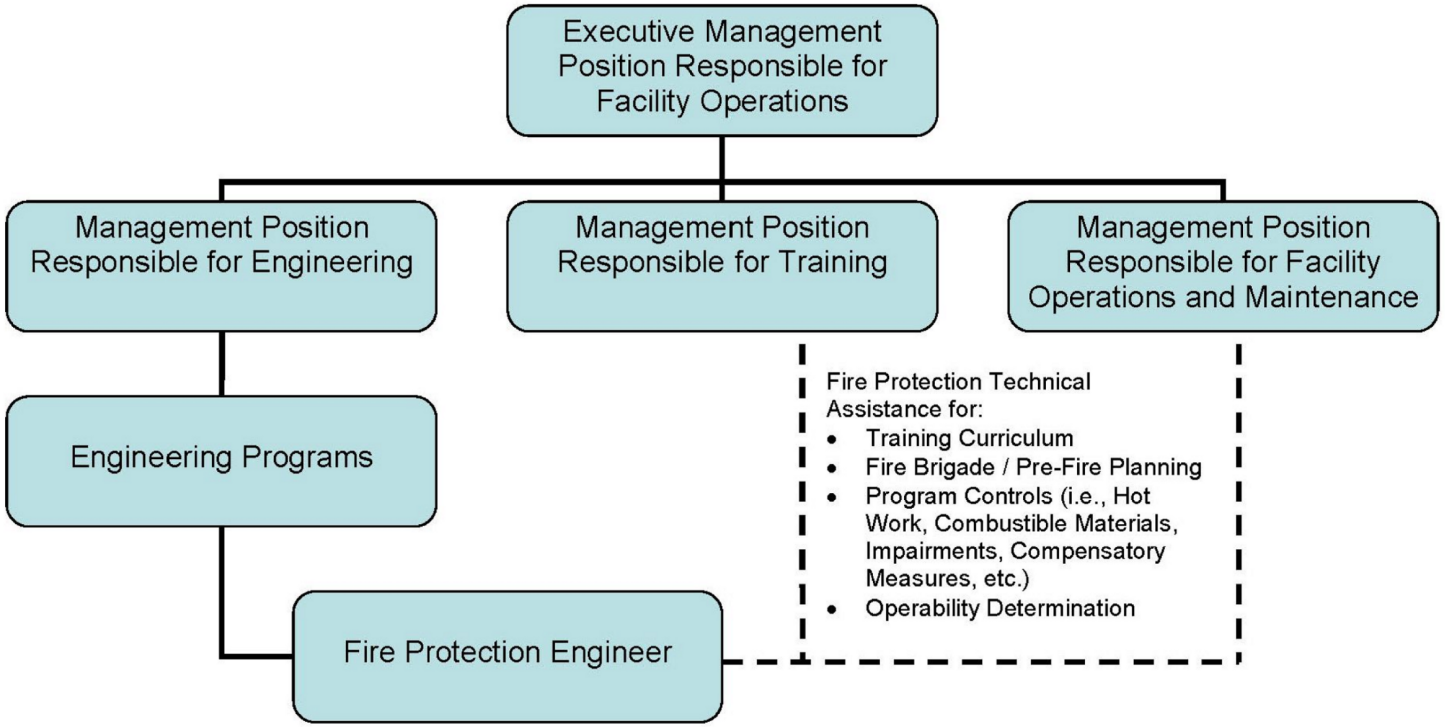

© 2007 UniStar Nuclear Development, LLC. All rights reserved.
COPYRIGHT PROTECTED
FSAR Section 9.0

9.A FIRE PROTECTION ANALYSIS

Appendix 9A of the U.S. EPR FSAR is incorporated by reference with the following supplement.

The information in U.S. EPR FSAR Appendix 9A – the fire protection analysis of the nuclear island – is supported by additional information provided in Appendix 9B ~~of the CCNPP Unit 3 FSAR~~. Appendix 9B ~~of the CCNPP Unit 3 FSAR~~ provides the fire protection analysis of the remaining power block and balance of plant structures.

Figures 9.A-98 through 106 in the U.S. EPR FSAR are identified as conceptual information for the Access Building. These figures and the corresponding fire area parameters in Table 9A-2 of the U.S. EPR FSAR for the Access Building are applicable to the plant.

© 2007 UniStar Nuclear Development, LLC. All rights reserved.
COPYRIGHT PROTECTED

© 2007 UniStar Nuclear Development, LLC. All rights reserved.
COPYRIGHT PROTECTED