Month - Year		Sample Location	EQ-2	EQ-2	EQ-2	EQ-2	EQ-2	EQ-2	EQ-2	EQ-2	EQ-2	EQ-2	EQ-2			EQ-2	EQ-2	EQ-2	Comments
		PARA METER	BOD5	pH	pH	Dissolved Oxygen	Total Inorganic Nitrogen	Ammonia	Nitrate Nitrogen	Nitrite Nitrogen	Dissolved Sodium	Chloride	Phosphorus	Flow (Meas)	Flow (Calc)	Freeboard	Vegetation	Dike Insp	
		LIMITS		Min	Max									60000	21900000				
	DAY	UNITS	mg/l	6.5	9.0	mg/l	mg/l	mg/l	mg/l	mg/l	mg/l	mg/l	mg/l	GPD	GPY	Feet	Sat/Unsat	Sat/Unsat	
January-05	1													4770					Data from CNP DMR 2005.xls
	2													10870					
	3													10130					
	4		2.02	8.02			44.3	0.1	43.7	0.5			2.28	19410					
	5													16120					
	6													17890					
	7													17610					
	8													13630					
	9													9810					
	10													10800					
	11		2.73	8.02			42.52	0.1	42.4	0.02			1.5	19910					
	12													16190					
	13													18500					
	14													18140					
	15													15050					
	16													9440					
	17		3.07	7.94			38.22		38.1	0.02			6.75	12310					
	18													19750					
	19													19000					
	20													16440					
	21							0.1						18590					
	22													15340					
	23													9860					
	24													10890					
	25		4.32	7.53			41.46	1.4	40	0.06			0.75	19750					
	26													16530					
	27													19640					
	28													17580					
	29													18090					
	30													5560					
	31													7730					
February-05	1		8.8	7.55			32.24	0.82	31.4	0.03			5.13	17710					Data from CNP DMR 2005.xls
	2													24880					
	3													24770					
	4													15390					
	5													16220					
	6													13650					
	7													14310					
	8		4.22	7.28			28.09	8.2	19.7	0.19			0.13	14110					
	9													13240					
	10													18700					
	11													16950					
	12													14970					
	13													9540					
	14													14260					
	15		5.78	7.6			33.42	0.34	32.9	0.18			0.88	17940					
	16													18070					
	17													20490					
	18													20050					
	19													16040					
	20													9540					
	21													10630					
	22		5.78	7.4			33.44	0.12	33.3	0.02			0.13	22000					
	23													17270					
	24													20560					
	25													18670					
	26													17550					
	27													11970					
	28													13240					

Month - Year		Sample Location	EQ-2	EQ-2	EQ-2	EQ-2	EQ-2	EQ-2	EQ-2	EQ-2	EQ-2	EQ-2	EQ-2			EQ-2	EQ-2	EQ-2	Comments
		PARA METER	BOD5	pH	pH	Dissolved Oxygen	Total Inorganic Nitrogen	Ammonia	Nitrate Nitrogen	Nitrite Nitrogen	Dissolved Sodium	Chloride	Phosphorus	Flow (Meas)	Flow (Calc)	Freeboard	Vegetation	Dike Insp	
		LIMITS		Min	Max									60000	21900000				
	DAY	UNITS	mg/l	6.5	9.0	mg/l	mg/l	mg/l	mg/l	mg/l	mg/l	mg/l	mg/l	GPD	GPY	Feet	Sat/Unsat	Sat/Unsat	
March-05	1		6.93	7.74			33.39	1.04	31.7	0.65			0.25	17250					Data from CNP DMR 2005.xls
	2													17570					
	3													19560					
	4													18570					
	5													15500					
	6													11830					
	7													12300					
	8		9.18	7.67			33.15	2.51	29.9	0.74			0.88	18010					
	9													18720					
	10													19470					
	11													17140					
	12													14680					
	13													11650					
	14													18520					
	15		4.84	7.35			31.22	3.75	26.5	0.97			0.06	20290					
	16													16710					
	17													19260					
	18													19220					
	19													14730					
	20													13380					
	21													21290					
	22		6.32	7.51			35.41	7.6	24.6	3.21			0.13	22920					
	23													21900					
	24													21710					
	25													19270					
	26													18740					
	27													19250					
	28		7.48	7.77			43.01	1.91	37.6	3.5			0.13	23530					
	29		5.55	7.39			42.82	4.94	30.2	7.68			1	24610					
	30													23940					
	31													28580					
April-05	1													23950					Data from CNP DMR 2005.xls
	2													22870					
	3													29030					
	4		8.45	7.29			60.45	0.95	45.7	13.8			1.02	25830					
	5		10.34	7.24			50.84	5	29.8	16.04			3.25	22780					
	6													24910					
	7													26240					
	8													24640					
	9													21230					
	10													19060					
	11		9.8	7.63			68.67	0.53	61	7.14			0.01	22250					
	12		8.27	7.53			63.25	4	47.9	11.35			3.25	26770					
	13													24210					
	14													25310					
	15													26170					
	16													20940					
	17													15930					
	18		13.9	7.62			39.62	5	30.1	4.52			1.75	18460					
	19		7.91	7.54			42	1.5	39	1.5			1.5	17830					
	20													24000					
	21													22550					
	22													21640					
	23													13760					
	24													14450					
	25		7.28	7.45			21.59	0.2	21.2	0.19			1.5	17740					
	26		6.39	7.39			27.28	0.2	27	0.08			0.88	20510					
	27													20510					
	28													18330					

Month - Year		Sample Location	EQ-2	EQ-2	EQ-2	EQ-2	EQ-2	EQ-2	EQ-2	EQ-2	EQ-2	EQ-2	EQ-2			EQ-2	EQ-2	EQ-2	Comments
		PARA METER	BOD5	pH	pH	Dissolved Oxygen	Total Inorganic Nitrogen	Ammonia	Nitrate Nitrogen	Nitrite Nitrogen	Dissolved Sodium	Chloride	Phosphorus	Flow (Meas)	Flow (Calc)	Freeboard	Vegetation	Dike Insp	
		LIMITS		Min	Max									60000	21900000				
	DAY	UNITS	mg/l	6.5	9.0	mg/l	mg/l	mg/l	mg/l	mg/l	mg/l	mg/l	mg/l	GPD	GPY	Feet	Sat/Unsat	Sat/Unsat	
	29													17970					
	30													12470					
May-05	1													12050					Data from CNP DMR 2005.xls
	2													8600					
	3		5.14	7.56			23.5	0.25	23.2	0.05			0.63	17590					
	4													16410					
	5													16980					
	6													19030					
	7													14590					
	8													12250					
	9		4.25	7.78			21.02	0.1	20.9	0.02			0.5	7210					
	10		1.92	7.84			23.43	0.2	23.2	0.03			0.88	13620					
	11													19840					
	12													18350					
	13													20440					
	14													14330					
	15													10500					
	16		3.67	7.81			17.22	0.1	17.1	0.02			0.13	10560					
	17													16970					
	18													18570					
	19													19810					
	20													16100					
	21													11660					
	22													11080					
	23		5.4	7.91			12.43	0.1	12.3	0.03			1.25	12360					
	24													15220					
	25													15340					
	26													18700					
	27													18750					
	28													10120					
	29													8750					
	30													10150					
	31		5.4	7.75			12.14	0.1	12	0.04			1.25	15280					
June-05	1													16540					Data from CNP DMR 2005.xls
	2													18060					
	3													19340					
	4													13770					
	5													8380					
	6		4.11	7.9			7.82	0.2	7.6	0.02			1.88	11790					
	7													16520					
	8													16060					
	9													14140					
	10													16260					
	11													13520					
	12													10330					
	13		5.71	7.67			15.22	0.1	15.1	0.02			1.13	18010					
	14													20600					
	15													20680					
	16													24760					
	17													23010					
	18													11730					
	19													14260					
	20		4.16	7.95			9.63	0.1	9.5	0.03			2.25	14900					
	21		2.62	7.84			15.36	0.2	15	0.16			2.13	18440					
	22													20100					
	23													19830					
	24													22680					
	25													14410					
	26													12640					

Month - Year		Sample Location	EQ-2	EQ-2	EQ-2	EQ-2	EQ-2	EQ-2	EQ-2	EQ-2	EQ-2	EQ-2	EQ-2			EQ-2	EQ-2	EQ-2	Comments
		PARA METER	BOD5	pH	pH	Dissolved Oxygen	Total Inorganic Nitrogen	Ammonia	Nitrate Nitrogen	Nitrite Nitrogen	Dissolved Sodium	Chloride	Phosphorus	Flow (Meas)	Flow (Calc)	Freeboard	Vegetation	Dike Insp	
		LIMITS		Min	Max									60000	21900000				
	DAY	UNITS	mg/l	6.5	9.0	mg/l	mg/l	mg/l	mg/l	mg/l	mg/l	mg/l	mg/l	GPD	GPY	Feet	Sat/Unsat	Sat/Unsat	
	27		1.54	7.65			13.12	0.1	13	0.02			0.21	15100					
	28		0.99	7.58			19.53	0.1	19.4	0.03			0.3	20180					
	29													21620					
	30													21280					
July-05	1													20830					Data from CNP DMR 2005.xls
	2													17120					
	3													15130					
	4													18230					
	5		3.63	7.84			20.13	0.1	20	0.03			1.88	15990					
	6													22810					
	7													18560					
	8													17360					
	9													16430					
	10													13100					
	11		3.44	7.71			22.43	0.1	22.3	0.03			1	10540					
	12		2.89	7.52			35.66	0.1	35.5	0.06			1	19060					
	13													14970					
	14													16320					
	15													19660					
	16													15740					
	17													10060					
	18		2.51	7.89			6.23	0.11	6.1	0.02			1.25	12540					
	19		2.59	7.89			9.04	0.2	8.8	0.04			1.75	13940					
	20													15640					
	21													17460					
	22													15630					
	23													9790					
	24													11860					
	25		2.72	7.91			9.13	0.1	9	0.03			2	15940					
	26													17620					
	27													18420					
	28													19180					
	29													19750					
	30													13620					
	31													9550					
August-05	1		1.9	7.77			6.33	0.1	6.2	0.03			0.5	12470					Data from CNP DMR 2005.xls
	2													19470					
	3													19470					
	4													15030					
	5													20790					
	6													12950					
	7													10440					
	8		3.02	7.66			6.13	0.1	6	0.03			0.5	12400					
	9		2.73	7.57			10.98	0.13	10.8	0.05			0.13	17810					
	10													17570					
	11													17070					
	12													16920					
	13													14070					
	14													11130					
	15													10480					
	16		1.4	7.63			9.19	0.08	9.1	0.01			0.38	15590					
	17													16960					
	18													16000					
	19													15790					
	20													13470					
	21													12980					
	22		2.1	7.73			6.05	0.13	5.9	0.02			0.88	14710					
	23		1.4	7.62			12.33	0.1	12.2	0.03			0.88	14870					
	24													19880					

Month - Year		Sample Location	EQ-2	EQ-2	EQ-2	EQ-2	EQ-2	EQ-2	EQ-2	EQ-2	EQ-2	EQ-2	EQ-2			EQ-2	EQ-2	EQ-2	Comments
		PARA METER	BOD5	pH	pH	Dissolved Oxygen	Total Inorganic Nitrogen	Ammonia	Nitrate Nitrogen	Nitrite Nitrogen	Dissolved Sodium	Chloride	Phosphorus	Flow (Meas)	Flow (Calc)	Freeboard	Vegetation	Dike Insp	
		LIMITS		Min	Max									60000	21900000				
	DAY	UNITS	mg/l	6.5	9.0	mg/l	mg/l	mg/l	mg/l	mg/l	mg/l	mg/l	mg/l	GPD	GPY	Feet	Sat/Unsat	Sat/Unsat	
	25													19700					
	26													12890					
	27													14020					
	28													10980					
	29		2.7	7.64			8.43	0.31	8.1	0.02			1.25	24670					
	30													28220					
	31													18400					
September-05	1													18550					Data from CNP DMR 2005.xls
	2													17030					
	3													9540					
	4													12610					
	5													11090					
	6		1.37	7.82			10.39	0.06	10.3	0.03			0.88	14660					
	7													22300					
	8													17770					
	9													21260					
	10													13920					
	11													13830					
	12		2.74	7.96			8.32	0.09	8.2	0.03			0.88	13560					
	13		3.26	7.65			12.49	0.16	12.3	0.03			1	17970					
	14													18620					
	15													17760					
	16													17310					
	17													16260					
	18													14740					
	19													12300					
	20		1.13	7.61			11.22	0.1	11.1	0.02			1.25	16800					
	21													18890					
	22													18600					
	23													20520					
	24													14260					
	25													12350					
	26		2.79	7.9			5.72	0.1	5.6	0.02			0.75	16180					
	27		1.67	8.07			11.19	0.06	11.1	0.03			1.25	19200					
	28													14450					
	29													19100					
	30													19770					
October-05	1													14480					Data from CNP DMR 2005.xls
	2													11400					
	3													10920					
	4		0.76	7.54			10.26	0.14	10.1	0.02			0.38	19130					
	5													15710					
	6													18660					
	7													19350					
	8													14330					
	9													9460					
	10		1.8	7.68			10.7	0.08	10.6	0.02			0.13	12620					
	11		0.74	7.6			14.85	0.02	14.8	0.03			0.25	17540					
	12													17870					
	13													14580					
	14													19380					
	15													14340					
	16													13160					
	17		0.52	7.79			13.49	0.08	13.4	0.01			0.63	13360					
	18		0.42	7.77			17.61	0.07	17.5	0.04			0.88	17730					
	19													19000					
	20													17170					
	21													19090					
	22													16260					

Month - Year		Sample Location	EQ-2	EQ-2	EQ-2	EQ-2	EQ-2	EQ-2	EQ-2	EQ-2	EQ-2	EQ-2	EQ-2			EQ-2	EQ-2	EQ-2	Comments
		PARA METER	BOD5	pH	pH	Dissolved Oxygen	Total Inorganic Nitrogen	Ammonia	Nitrate Nitrogen	Nitrite Nitrogen	Dissolved Sodium	Chloride	Phosphorus	Flow (Meas)	Flow (Calc)	Freeboard	Vegetation	Dike Insp	
		LIMITS		Min	Max									60000	21900000				
	DAY	UNITS	mg/l	6.5	9.0	mg/l	mg/l	mg/l	mg/l	mg/l	mg/l	mg/l	mg/l	GPD	GPY	Feet	Sat/Unsat	Sat/Unsat	
	23													11740					
	24		1.23	7.73			12.1	0.08	12	0.02			1.13	10910					
	25													17740					
	26													19220					
	27													17190					
	28													18790					
	29													14680					
	30													12770					
	31		0.86	7.78			13.91	0.08	13.8	0.03			0.63	16090					
November-05	1		0.58	7.57			16.1	0.06	16	0.04			0.13	17420					Data from CNP DMR 2005.xls
	2													24280					
	3													19660					
	4													15430					
	5													14860					
	6													11770					
	7		0.89	7.69			8.2	0.08	8.1	0.02			0.38	14380					
	8		0.75	7.63			12.15	0.9	11.2	0.05			0.5	23060					
	9													18270					
	10													24410					
	11													20970					
	12													16120					
	13													12720					
	14													13370					
	15		0.72	7.6			8.2	0.25	7.9	0.05			0.38	10370					
	16													15310					
	17													19940					
	18													21070					
	19													12890					
	20													12110					
	21													17040					
	22		0.23	7.73			20.04	0.1	19.9	0.04			1.13	16640					
	23													11480					
	24													9880					
	25													9640					
	26													9420					
	27													13100					
	28		0.65	7.66			23.42	0.08	23.3	0.04			0.01	13030					
	29													19190					
	30													14240					
December-05	1													20060					ta from CNP DMR 2005.xls
	2													19440					
	3													11430					
	4													12930					
	5													15560					
	6		2.39	7.25			27.17	2.46	24.6	0.11			0.2	17880					
	7													17840					
	8													19790					
	9													19850					
	10													10420					
	11													12410					
	12		0.96	7.61			8.28	0.15	8.1	0.03			0.25	10800					
	13		0.95	7.37			12.02	0.17	11.8	0.05			1.5	14150					
	14													17610					
	15													18600					
	16													20390					
	17													11880					
	18													11070					
	19		2.76	7.65			12.11	0.08	12	0.03			0.13	14700					
	20		2.4	7.59			15.31	0.08	15.2	0.03			0.13	11540					

Month - Year		Sample Location	EQ-2	EQ-2	EQ-2	EQ-2	EQ-2	EQ-2	EQ-2	EQ-2	EQ-2	EQ-2	EQ-2			EQ-2	EQ-2	EQ-2	Comments
		PARA METER	BOD5	pH	pH	Dissolved Oxygen	Total Inorganic Nitrogen	Ammonia	Nitrate Nitrogen	Nitrite Nitrogen	Dissolved Sodium	Chloride	Phosphorus	Flow (Meas)	Flow (Calc)	Freeboard	Vegetation	Dike Insp	
		LIMITS		Min	Max									60000	21900000				
	DAY	UNITS	mg/l	6.5	9.0	mg/l	mg/l	mg/l	mg/l	mg/l	mg/l	mg/l	mg/l	GPD	GPY	Feet	Sat/Unsat	Sat/Unsat	
	21													14030					Da
	22													17650					
	23													9970					
	24													12810					
	25													7980					
	26													8960					
	27		2.83	7.59			13.87	0.06	13.8	0.01			0.5	12980					
	28													11770					
	29													16280					
	30													10420					
	31													9690					
January-06	1													7100					Data from CNP DMR 2006.xls
	2													6720					
	3		2.32	7.51			23.2	0.08	23.1	0.02			0.01	15250					
	4													23140					
	5													16430					
	6													22080					
	7													12790					
	8													12380					
	9		2.36	7.75			25.06	0.27	24.7	0.09			0.01	13930					
	10		2.25	7.53			23.52	0.72	22.6	0.2			0.5	18220					
	11													19720					
	12													15780					
	13													21560					
	14													8540					
	15													12690					
	16		2.57	7.6			19.21	0.08	19.1	0.03			0.38	12720					
	17		1.69	7.49			18.16	0.2	17.9	0.06			0.38	20930					
	18													19610					
	19													17000					
	20													19920					
	21													10690					
	22													12830					
	23		3.03	7.61			20.97	0.28	20.6	0.09			0.25	13910					
	24													19600					
	25													22400					
	26													19000					
	27													15450					
	28													14470					
	29													15460					
	30													15840					
	31		1.89	7.6			18.98	0.4	18.5	0.08			0.75	21120					
February-06	1													19610					om CNP DMR 2006.xls
	2													22860					
	3													16270					
	4													16690					
	5													12930					
	6		2.48	7.53			14.73	0.7	14	0.03			0.38	11780					
	7		2.44	7.41			16.76	2.1	14.6	0.06			0.25	20380					
	8													15750					
	9													21520					
	10													18120					
	11													18980					
	12													13490					
	13													15650					
	14		2.24	7.65			18.15	1.4	16.7	0.05			1.38	19120					
	15													17740					
	16													17580					
	17													16270					

Month - Year		Sample Location	EQ-2	EQ-2	EQ-2	EQ-2	EQ-2	EQ-2	EQ-2	EQ-2	EQ-2	EQ-2	EQ-2			EQ-2	EQ-2	EQ-2	Comments
		PARA METER	BOD5	pH	pH	Dissolved Oxygen	Total Inorganic Nitrogen	Ammonia	Nitrate Nitrogen	Nitrite Nitrogen	Dissolved Sodium	Chloride	Phosphorus	Flow (Meas)	Flow (Calc)	Freeboard	Vegetation	Dike Insp	
		LIMITS		Min	Max									60000	21900000				
	DAY	UNITS	mg/l	6.5	9.0	mg/l	.mg/l	mg/l	mg/l	mg/l	mg/l	mg/l	mg/l	GPD	GPY	Feet	Sat/Unsat	Sat/Unsat	
	18													11190					Data fr
	19													13220					
	20													13690					
	21		2.94	7.47			17.51	0.87	16.6	0.04			1.25	21070					
	22													22190					
	23													16610					
	24													22290					
	25													16230					
	26													10290					
	27													17880					
	28		2.33	7.43			7.95	0.41	7.5	0.04			1.38	13650					
March-06	1													22180					Data from CNP DMR 2006.xls
	2													18060					
	3													21280					
	4													16070					
	5													9910					
	6		2.89	7.67			12.71	1.2	11.4	0.11			0.5	17690					
	7		1.97	7.34			16.56	3.84	12.1	0.62			0.38	17090					
	8													20950					
	9													21090					
	10													18010					
	11													17200					
	12													10580					
	13		1.57	7.64			7.1	0.35	6.7	0.05			0.63	17230					
	14		1.87	7.49			12.13	1.94	10	0.19			0.5	18480					
	15													21210					
	16													21140					
	17													18530					
	18													16380					
	19													13750					
	20													18730					
	21		2.95	7.63			21.67	7.1	14.3	0.27			2.5	19490					
	22													27880					
	23													26940					
	24													21580					
	25													27540					
	26													22330					
	27													18540					
	28		6.42	7.19			39.8	8.4	29.3	2.1			3.75	25730					
	29													28160					
	30													33180					
	31													24910					
April-06	1													24640					n CNP DMR 2006.xls
	2													25770					
	3			7.49			39.08	17.4	21.2	0.48			3.5	23440					
	4		3	7.33			49.7	14.7	34.4	0.6			2.75	27820					
	5													29110					
	6													32510					
	7													31860					
	8													27230					
	9													19800					
	10		2	7.34			36.51	8.23	27.9	0.38			1.69	24390					
	11			7.38			47.93	13.15	34.3	0.48			2	26430					
	12													30440					
	13													28110					
	14													23240					
	15													18720					
	16													26440					
	17			7.26			30.95	7.54	23.2	0.21			2.88	23070					

Month - Year		Sample Location	EQ-2	EQ-2	EQ-2	EQ-2	EQ-2	EQ-2	EQ-2	EQ-2	EQ-2	EQ-2	EQ-2			EQ-2	EQ-2	EQ-2	Comments
		PARA METER	BOD5	pH	pH	Dissolved Oxygen	Total Inorganic Nitrogen	Ammonia	Nitrate Nitrogen	Nitrite Nitrogen	Dissolved Sodium	Chloride	Phosphorus	Flow (Meas)	Flow (Calc)	Freeboard	Vegetation	Dike Insp	
		LIMITS		Min	Max									60000	21900000				
	DAY	UNITS	mg/l	6.5	9.0	mg/l	mg/l	mg/l	mg/l	mg/l	mg/l	mg/l	mg/l	GPD	GPY	Feet	Sat/Unsat	Sat/Unsat	
	18		3	7.17			47.84	1.35	46.4	0.09			2.5	21460					Data fron
	19													24700					
	20													23950					
	21													24300					
	22													21820					
	23													20530					
	24		2.3	7.37			21.06	0.01	21	0.05			1.88	16700					
	25													17350					
	26													21040					
	27													22980					
	28													17160					
	29													16990					
	30													14470					
	1													15160					
	2		2.28	7.58			15.35	0.01	15.3	0.04			0.88	21050					
	3													17030					
	4													19880					
	5													19440					
	6													10930					
	7													13200					
	8		3.56	7.68			11.94	0.01	11.9	0.03			0.38	17260					
	9													18650					
	10													22540					
	11													22340					
	12													23630					
	13													17910					
	14													12910					
May-06	15		3.12	7.5			5.84	0.01	5.8	0.03			0.13	19200					Data from CNP DMR 2006.xls
	16													20390					
	17													21060					
	18													20100					
	19													18880					
	20													17320					
	21													12000					
	22			7.6			12.84	0.01	12.8	0.03			0.75	13070					
	23		2.9	7.52			18.24	0.01	18.2	0.03			0.63	19200					
	24													16390					
	25													22770					
	26													20180					
	27													14600					
	28													10780					
	29													9580					
	30		2.24	7.69			11.05	0.01	11	0.04			0.25	16700					
	31													18990					
	1													18120		9	sat	sat	
	2										35			21370					
	3													12130					
	4													13070					
	5			7.21		5.55	17.338	0.01	17.3	0.028	32.1	119.5		17630		9	sat	sat	
	6		1.31	7.43									0.44	16860					
	7													20010					
	8													21260		9	sat	sat	
	9													17810					
	10													16220					
	11													12430					
	12					6.07						127.5		11800					y SBR 2006.xls
	13		1.6	7.05			22.845	0.01	22.8	0.035	32.1		0.5	18360		9	sat	sat	
e-06	14		0.79			3.73								18420					
	15													16200					

Month - Year		Sample Location	EQ-2	EQ-2	EQ-2	EQ-2	EQ-2	EQ-2	EQ-2	EQ-2	EQ-2	EQ-2	EQ-2			EQ-2	EQ-2	EQ-2	Comments
		PARA METER	BOD5	pH	pH	Dissolved Oxygen	Total Inorganic Nitrogen	Ammonia	Nitrate Nitrogen	Nitrite Nitrogen	Dissolved Sodium	Chloride	Phosphorus	Flow (Meas)	Flow (Calc)	Freeboard	Vegetation	Dike Insp	
		LIMITS		Min	Max									60000	21900000				
	DAY	UNITS	mg/l	6.5	9.0	mg/l	mg/l	mg/l	mg/l	mg/l	mg/l	mg/l	mg/l	GPD	GPY	Feet	Sat/Unsat	Sat/Unsat	
Jun	16													18170		9.5	sat	sat	Data from Dail
	17													13060					
	18													12000					
	19													13990		9.5	sat	sat	
	20		2	7.17		3.25	8.758	0.14	8.6	0.018	27.9	142	0.5	20330					
	21					2.58						138		16850					
	22													20080					
	23													20070		9.5	sat	sat	
	24													11740					
	25													12690					
	26													16610					
	27		0.97	6.98		2.71	12.34	0.01	12.3	0.03	30.9	124	0.25	15890		9.5	sat	sat	
	28		0.88	7.16		4.09	23.14	0.01	23.1	0.03			1	20440					
	29													17500					
	30													18170		9.5	sat	sat	
July-06	1													13430					Data from Daily SBR 2006.xls
	2													9800					
	3			7.23		4.59					34.1	126		14380		9.5	sat	sat	
	4													14140					
	5		1.39			5.6	6.04	0.01	6	0.03	32.2		0.5	11850					
	6		0.95											15180		9.5	sat	sat	
	7													17700					
	8													13410					
	9													9180					
	10													15000		9.5	sat	sat	
	11		1.21	7.35		4.76	21.84	0.01	21.8	0.03	31.6	124	0.13	17600					
	12		0.74								32.9	123.5		21250					
	13													18960					
	14													21400		9.5	sat	sat	
	15													11940					
	16													13390					
	17					5.67					31.9	118.5		15930					
	18		0.75				15.5		15.5		29	111.5	0.75	20000		9.5	sat	sat	
	19			7.13		4.69	19.74	0.01	19.7	0.03			1.13	19330					
	20													22480					
	21													20120		9.5	sat	sat	
	22													12520					
	23													13060					
	24													16780					
	25		1.61			2.7	9.7		9.7		31.2	110	1.13	17670		9.5	sat	sat	
	26													20130					
	27		0.85	7		3.01	16.58	0.05	16.5	0.03			2	16960		9.5	sat	sat	
	28													19880					
	29													18640					
	30													20320					
	31													21470		9	sat	sat	
	1		1.48			2.99	9.1		9.1		26.6	95	1.63	22430					2006.xls
	2		0.65	7.17		2.1	19.6	0.07	19.5	0.03	29.8		1.5	20760					
	3													19180					
	4													22900		9	Sat	Sat	
	5													17410					
	6													12860					
	7													19180		9.5	Sat	Sat	
	8		0.83			3.02	6.4		6.4		26.9	105	0.63	19480					
	9		0.68	7.05		1.26	12.545	0.01	12.5	0.035			1.44	23890		9.5	Sat	Sat	
	10													24800					
	11													19390					
	12													16930					
	13													13280					

Month - Year		Sample Location	EQ-2	EQ-2	EQ-2	EQ-2	EQ-2	EQ-2	EQ-2	EQ-2	EQ-2	EQ-2	EQ-2			EQ-2	EQ-2	EQ-2	Comments
		PARA METER	BOD5	pH	pH	Dissolved Oxygen	Total Inorganic Nitrogen	Ammonia	Nitrate Nitrogen	Nitrite Nitrogen	Dissolved Sodium	Chloride	Phosphorus	Flow (Meas)	Flow (Calc)	Freeboard	Vegetation	Dike Insp	
		LIMITS		Min	Max									60000	21900000				
	DAY	UNITS	mg/l	6.5	9.0	mg/l	mg/l	mg/l	mg/l	mg/l	mg/l	mg/l	mg/l	GPD	GPY	Feet	Sat/Unsat	Sat/Unsat	
August-06	14													10990		9.5	sat	sat	Data from Daily SBR
	15		0.94	7.23		1.54	12.827	0.01	12.8	0.017	31.9	117.5	0.75	16670					
	16		0.92			3.6					34.5	127		21340					
	17					2					36.5	125.5		17570					
	18													21110		9.5	sat	sat	
	19													14780					
	20													10950					
	21		1.54	7.34		4.7	4.17	0.01	4.16		34.7	124	0.38	16740		9.5	sat	sat	
	22		1.36	7.45		4.62	8.03	0.01	8	0.02	35.1	120	0.38	19980					
	23													18080					
	24										38.7	123		20850		9.5	sat	sat	
	25													20120					
	26													13270					
	27													15080					
	28			7.34		4.89	2.525	0.01	2.5	0.015		125.5	1.13	21010					
	29					1.54						118.5		24940		9.5	sat	sat	
	30		1.9	7.41		3.54	17.02	0.01	17	0.01	35	117.5		25680					
	31													26260		9.5	sat	sat	
September-06	1													22390					Data from Daily SBR 2006.xls
	2													19610					
	3													11210					
	4													10700					
	5													18870					
	6		2.8			0.94	16.3		16.3		32.6	115	2.38	27320					
	7			7.37		1.41	30.6	2.07	28.3	0.23	39.4	117.5	2.88	26120		9.5	sat	sat	
	8					1.57					41.2			28680					
	9													19150					
	10													20650					
	11		2	7.3		4.14	6.96	0.01	6.9	0.05	31.5	124	0.63	25980		9	sat	sat	
	12													29690					
	13													32640					
	14													29270					
	15													31270		9	sat	sat	
	16													29380					
	17													25730					
	18			7.1		1.58	32.47	10.6	21.8	0.07		123	4.13	33800					
	19		1.73	7.06		1.28	45.855	18.8	26.9	0.155	41.7		4.13	34550		9	sat	sat	
	20		1.27											41920					
	21													36260					
	22													35090		9.5	sat	sat	
	23													27820					
	24													32610					
	25													35320		8.5	sat	sat	
	26			7.08		1.46	39.895	9.2	30.5	0.195	42.5	138.5		41000					
	27		2.02			1.36	0.175			0.175				34990					
	28		2.64	7.16		0.7	56.06	16.7	39.1	0.26		141.5	3	35410					
	29													36060		8.5	sat	sat	
	30													34990					
	1													34910					
	2					1.42						140	2	31720					
	3		1.4	6.85		0.86	46.21	8.35	37.7	0.16	45.8		2	35810		8.5	Sat	Sat	
	4		1.91			1.31								41990					
	5													36160					
	6													36110		8.5	Sat	Sat	
	7													39290					
	8													36210					
	9													29790		9	Sat	Sat	
	10		3.58				35.4		35.4		48.1	151.9		33680					
	11		4.06	7.1		0.74	53.975	7.4	46.3	0.275		146	2.76	36400					xls

Month - Year		Sample Location	EQ-2	EQ-2	EQ-2	EQ-2	EQ-2	EQ-2	EQ-2	EQ-2	EQ-2	EQ-2	EQ-2			EQ-2	EQ-2	EQ-2	Comments
		PARA METER	BOD5	pH	pH	Dissolved Oxygen	Total Inorganic Nitrogen	Ammonia	Nitrate Nitrogen	Nitrite Nitrogen	Dissolved Sodium	Chloride	Phosphorus	Flow (Meas)	Flow (Calc)	Freeboard	Vegetation	Dike Insp	
		LIMITS		Min	Max									60000	21900000				
	DAY	UNITS	mg/l	6.5	9.0	mg/l	mg/l	mg/l	mg/l	mg/l	mg/l	mg/l	mg/l	GPD	GPY	Feet	Sat/Unsat	Sat/Unsat	
October-06	12													43360		8.5	Sat	Sat	Data from Daily SBR 2006.
	13													33200					
	14													36980					
	15													31910					
	16													36140					
	17					0.91	34.9		34.9		40.4			37480					
	18		2.5			0.96						124	3.63	36500		9	Sat	Sat	
	19		2.96	6.95		1.71	50.765	8.4	42.1	0.265		131.5	3.25	41390					
	20													33790					
	21													35070					
	22													37210					
	23													31570		8	Sat	Sat	
	24		1.95			2.03	40.6		40.6		44.8	138	1	31480					
	25		2.65	6.85		2.26	49.755	1.13	48.6	0.025		141	1.5	32540					
	26													33090					
	27													29140		8	Sat	Sat	
	28													23210					
	29													24070					
	30													26370		8.5	Sat	Sat	
	31		1.96	6.71		2.6	46.2	0.16	46	0.04	52.2	160.5	1.88	25390					
November-06	1		1.82	6.9		3.02		0.01		0.04	42	157.5	1.75	24690		8.5	Sat	Sat	Data from Daily SBR 2006.xls
	2													23890					
	3													23480					
	4													23090					
	5													20180					
	6													18080		9	Sat	Sat	
	7		1.7	6.95		3.9	27.65	0.01	27.6	0.04	44	155.5	1.13	19420					
	8		1.64	7.24		4.7	0.035	0.01		0.025		153.5	0.63	17450					
	9													27630		9	Sat	Sat	
	10													25570					
	11													16230					
	12													16150					
	13			6.8		1.37	7.83	7.8		0.03		147.5	2.25	13710		9	Sat	Sat	
	14		8.95	7.28		1.05	12.63	8.2	4.4	0.03	40.2	144	1.88	19250					
	15		5.73	6.92		2.29	0.51	0.51				142.5		17390					
	16													25180					
	17													21530		8.5	Sat	Sat	
	18													17790					
	19													12760					
	20			7.09		5.49	13.54	0.01	13.5	0.03	35.6	133	0.25	13580		9.5	Sat	Sat	
	21		1.62									131.5		18600					
	22		1.15			6.16								15260		9.5	Sat	Sat	
	23													15200					
	24													9170					
	25													12140					
	26													10420					
	27			7.13		6.14	0.04	0.01		0.03		129	0.38	17310					
	28		0.69	6.99		4.34	21.43	0.01	21.4	0.02	28.3	130.5	0.5	16030		8.5	Sat	Sat	
	29		0.1			0.86								20660					
	30													10540					
	1													24070		9.5	Sat	Sat	
	2													14770					
	3													15290					
	4		1.01	7.23	7.2	6.72	19.743	0.04	19.7	0.003	29.8	133.5	0.201	10110		9.5	Sat	Sat	
	5													21770					
	6		2.12	6.88	6.9	2.19		0.01		0.009		129.5	0.294	20410		9	Sat	Sat	
	7													20920					
	8													18890					
	9													17340					

Month - Year		Sample Location	EQ-2	EQ-2	EQ-2	EQ-2	EQ-2	EQ-2	EQ-2	EQ-2	EQ-2	EQ-2	EQ-2			EQ-2	EQ-2	EQ-2	Comments
		PARA METER	BOD5	pH	pH	Dissolved Oxygen	Total Inorganic Nitrogen	Ammonia	Nitrate Nitrogen	Nitrite Nitrogen	Dissolved Sodium	Chloride	Phosphorus	Flow (Meas)	Flow (Calc)	Freeboard	Vegetation	Dike Insp	
		LIMITS		Min	Max									60000	21900000				
	DAY	UNITS	mg/l	6.5	9.0	mg/l	mg/l	mg/l	mg/l	mg/l	mg/l	mg/l	mg/l	GPD	GPY	Feet	Sat/Unsat	Sat/Unsat	
December-06	10													14110					Data from Daily SBR 2006.xls
	11			7.13	7.1	5.79		0.01				127.5	0.13	13470					
	12		2.04	6.9	6.9	3.26	21.735	0.01	21.7	0.025	33.4	126	0.13	18580					
	13		2.05	7.02	7.0			0.47		0.03			0.25	21810		9.5	Sat	Sat	
	14													20020					
	15													21410		9.5	Sat	Sat	
	16													14360					
	17													16730					
	18													13310					
	19			7.3	7.3	1.2	12.21	0.38	11.8	0.03	30.7	123	0.5	17690					
	20													12740					
	21		0.82	7.13	7.1							125		19350		9	Sat	Sat	
	22													12280					
	23													12500					
	24													8390					
	25													10430					
	26			7.3	7.3	5.2	3.935	0.01	3.9	0.025	27.8	135.5	0.13	13950					
	27		0.83	7.36	7.4	6.5		0.01		0.02		130	0.13	13540					
	28		0.93											17060		9.5	Sat	Sat	
	29													12790					
	30													9830					
	31													7340					
January-07	1													12750					Data from Daily SBR 2007.xls
	2					6.01	12.76	5.05	7.6	0.11	30.2	123	0.125	14310					
	3													17930		9	sat	sat	
	4		5.39	7.17	7.2									21270					
	5													21760					
	6													13950					
	7													12610					
	8			6.8	6.8	1.02								13970		9.5	sat	sat	
	9		8.35	7.17	7.2	1.54	14.535	13.8	0.7	0.035	39.2	130	0.125	14950					
	10		6.02	7.2	7.2	0.9								18040					
	11													20820		9.5	sat	sat	
	12													17670					
	13													12180					
	14													12480					
	15													16510					
	16		1.71	7.24	7.2	4.95	15.84	0.01	15.8	0.03	37.3	129.5	0.13	21120					
	17		1.27	7.17	7.2	5.22		0.01		0.025		130.5	0.13	18470		9	sat	sat	
	18													18280					
	19													27190		9	sat	sat	
	20													25070					
	21													16170					
	22													21180		9	sat	sat	
	23		6.5	7.11	7.1	1.54	6.185	2.55	3.6	0.035	28.5	101	0.75	24410					
	24		5.52	7.24	7.2	1.19		0.95		0.03		100	0.75	28940					
	25													23280					
	26													20500		9	sat	sat	
	27													27120					
	28													11970					
	29													20180					
	30													18700					
	31		4.82	6.58	6.58	1.17	17.05	1.52	15.5	0.03	37	114	0.5	21780		8.5	sat	sat	
	1		3.47	6.78	6.78	5.9	0.035	0.01		0.025		120	0.125	16630					
	2													19580		9	sat	sat	
	3													12620					
	4													12660					
	5													12180					
	6		2.48	7.13	7.13	3.64	9.34	0.01	9.3	0.03	42.4	130.5	0.75	19700					

Month - Year		Sample Location	EQ-2	EQ-2	EQ-2	EQ-2	EQ-2	EQ-2	EQ-2	EQ-2	EQ-2	EQ-2	EQ-2			EQ-2	EQ-2	EQ-2	Comments
		PARA METER	BOD5	pH	pH	Dissolved Oxygen	Total Inorganic Nitrogen	Ammonia	Nitrate Nitrogen	Nitrite Nitrogen	Dissolved Sodium	Chloride	Phosphorus	Flow (Meas)	Flow (Calc)	Freeboard	Vegetation	Dike Insp	
		LIMITS		Min	Max									60000	21900000				
	DAY	UNITS	mg/l	6.5	9.0	mg/l	mg/l	mg/l	mg/l	mg/l	mg/l	mg/l	mg/l	GPD	GPY	Feet	Sat/Unsat	Sat/Unsat	
February-07	7		3.32	7.2	7.2	4	0.04	0.01		0.03			0.63	19000					Data from Daily SBR 2007.xls
	8													23300		9	sat	sat	
	9													17160		9	sat	sat	
	10													16490					
	11													11720					
	12			7.6	7.6	5.61	6.85	0.01	6.8	0.04	44.6	128.5	0.38	19520					
	13													18140					
	14		12.34	7.3	7.3	1.35						126		21530					
	15													17500					
	16													21160		9	sat	sat	
	17													14520					
	18													16550					
	19													13030					
	20		1.86	7.04	7	2.44	3.85	0.02	3.8	0.03	42.4	126	0.13	22040					
	21		3.69	7	7	1.22	2.05	2.01		0.04		124.5	0.38	19500		8.5	sat	sat	
	22													22510					
	23													16860		9	sat	sat	
	24													15420					
	25													11320					
	26			7	7	3.81						128		17100		9	sat	sat	
	27													17250					
	28		2.18	6.88	6.9	2.01	9.88	0.04	9.8	0.04	45.9		0.13	20590					
March-07	1													18170		9	sat	sat	Data from Daily SBR 2007.xls
	2													21310					
	3													14850					
	4													15900					
	5													14470					
	6		1.22	7.18	7.2	1.47	6.33	0.5	5.8	0.03	41.1	119	0.38	19120		8.5	sat	sat	
	7		3.45	7.2	7.2	1.53				0.05		121.5	0.38	18100					
	8													22130					
	9													18630		9	sat	sat	
	10													20500					
	11													13930					
	12													17720		9	sat	sat	
	13		3.54	7.14	7.1	3.38	6.73	0.7	6	0.03	38.9	120	0.38	15580					
	14		5.36	7.04	7	1.31		3.8				119.5		23130		8.5	sat	sat	
	15													19070					
	16													22450					
	17													14660					
	18													16010					
	19													14830		9	sat	sat	
	20		0.86	6.96	7	2.21	7.725	0.7	7	0.025	43	110	0.13	20740					
	21		3.66	7.05	7.1	1.68		2.51				114		22430					
	22													22190					
	23													12790		9	sat	sat	
	24													11470					
	25													13310					
	26													13840		9.5	sat	sat	
	27		0.85	7.03	7	1.92	8.005	0.58	7.4	0.025	40	110	1.13	23130					
	28		3.62	7.07	7.1	1.37		1.77		0.035		108.5	1.44	18760					
	29													22520		9	sat	sat	
	30													17100					
	31													15650					
	1													14740					
	2													16280					
	3		2.07	7	7	3.87	5.725	0.1	5.6	0.025	38		0.13	14440					
	4		1.39	7	7	4.19				0.025		112.25	0.13	16740		8.5	Sat	Sat	
	5													15850					
	6													15920		9	Sat	Sat	

Month - Year		Sample Location	EQ-2	EQ-2	EQ-2	EQ-2	EQ-2	EQ-2	EQ-2	EQ-2	EQ-2	EQ-2	EQ-2			EQ-2	EQ-2	EQ-2	Comments
		PARA METER	BOD5	pH	pH	Dissolved Oxygen	Total Inorganic Nitrogen	Ammonia	Nitrate Nitrogen	Nitrite Nitrogen	Dissolved Sodium	Chloride	Phosphorus	Flow (Meas)	Flow (Calc)	Freeboard	Vegetation	Dike Insp	
		LIMITS		Min	Max									60000	21900000				
	DAY	UNITS	mg/l	6.5	9.0	mg/l	mg/l	mg/l	mg/l	mg/l	mg/l	mg/l	mg/l	GPD	GPY	Feet	Sat/Unsat	Sat/Unsat	
April-07	7													10880					Data from Daily SBR 2007.xls
	8													13680					
	9													12050		9	Sat	Sat	
	10		1.68	6.9	6.9	2.89	14.92	0.1	14.8	0.02	33.7		0.63	21420					
	11		3.87	7.17	7.2	2.03		0.01		0.09		113.5	0.88	21770					
	12													25880					
	13													21080		8.5	Sat	Sat	
	14													17940					
	15													13060					
	16													16420					
	17		2.39	6.99	7	3.23	15.375	0.83	14.5	0.045	35.2		0.13	21930		9	Sat	Sat	
	18		1.96	6.97	7	3.6		0.01		0.025		110.3	0.13	22450					
	19													22570		9	Sat	Sat	
	20													18160					
	21													16050					
	22													14650					
	23													17780		9.5	Sat	Sat	
	24		6.75	7.1	7.1	1.38	8.835	5.9	2.9	0.035	36.4	111	0.75	17660					
	25		7.15	6.96	7	1.44		3.28		0.04		111.5	0.5	24010					
	26													19350					
	27													25230		9	Sat	Sat	
	28													14270					
	29													14910					
	30													16340					
May-07	1		4.71	6.95	6.95	1.41	6.47	1.14	5.3	0.03	40.2	121.5	0.75	22490		9	sat	sat	Data from Daily SBR 2007.xls
	2		4.32	7.02	7.02	1.48		1.88		0.025			1	19540					
	3													20790		9.5	sat	sat	
	4													21330					
	5													18060					
	6													13860					
	7													22950		9	sat	sat	
	8		3.09	6.96	6.96	1.7	5.36	0.63	4.7	0.03	32.2	102.5	0.38	21110					
	9		1.67	7.05	7.1	1.1		0.88		0.025			0.38	25710					
	10													23110		9	sat	sat	
	11													26680					
	12													17840					
	13													19120					
	14													14080					
	15													25030					
	16		2.95	6.76	6.8	1.66	8.645	3.33	5.3	0.015	38.7	106.5	0.125	19470					
	17													24350		8.5	sat	sat	
	18													18920					
	19													19080					
	20													11370					
	21													19110					
	22			7.24	7.2	3.46	7.337	0.01	7.3	0.027	33.8	105	1.19	17920		8.5	sat	sat	
	23													20830					
	24													20450					
	25		1.52	7.17	7.2	5.51	0.01	0.01						21430					
	26													13670					
	27													12400					
	28													10660					
	29			7.35	7.4	4.29	2.34	0.01	2.3	0.03	33.7	122.5		16870					
	30											120.5	0.38	17020		9	sat	sat	
	31		0.12										0.75	20940					
	1													19240					
	2													17620					
	3													10830					
	4													15370					

Month - Year		Sample Location	EQ-2	EQ-2	EQ-2	EQ-2	EQ-2	EQ-2	EQ-2	EQ-2	EQ-2	EQ-2	EQ-2			EQ-2	EQ-2	EQ-2	Comments
		PARA METER	BOD5	pH	pH	Dissolved Oxygen	Total Inorganic Nitrogen	Ammonia	Nitrate Nitrogen	Nitrite Nitrogen	Dissolved Sodium	Chloride	Phosphorus	Flow (Meas)	Flow (Calc)	Freeboard	Vegetation	Dike Insp	
		LIMITS		Min	Max									60000	21900000				
	DAY	UNITS	mg/l	6.5	9.0	mg/l	mg/l	mg/l	mg/l	mg/l	mg/l	mg/l	mg/l	GPD	GPY	Feet	Sat/Unsat	Sat/Unsat	
June-07	5		3.31	7.3	7.3	2.32	3.19	0.65	2.5	0.04	32.9	109	0.88	22950		9	sat	sat	Data from Daily SBR 2007.xls
	6		2.64	7.35	7.4	2.17		1.01		0.03		107	0.63	21920					
	7													24400					
	8													18760					
	9													16620					
	10													12850					
	11													15490		9	sat	sat	
	12			7.27	7.3	2.77	8.138	0.11	8	0.028	34.7	106		17750					
	13													17680					
	14		0.25	7.19	7.2	4.91						118	1.94	19990		9	sat	sat	
	15													18570					
	16													14710					
	17													10870					
	18													18880					
	19								7		33.5			18040		9	sat	sat	
	20													22660					
	21													22790					
	22		1.74	7.12	7.1	3.57	0.05	0.01		0.04		105	2.63	18820		9	sat	sat	
	23													14580					
	24													13170					
	25					4.54						113.5		16220					
	26		2.23	7.09	7.1	1.21	6.64	0.72	5.8	0.12	34		0.38	18780		9	sat	sat	
	27		1.61	7.1	7.1	2.28		0.01		0.025			0.88	17090					
	28													21940		8.5	sat	sat	
	29													20380					
	30													16930					
July-07	1													9970					Data from Daily SBR 2007.xls
	2			7.05	7.05	3.15			0.5		36.2	124.2	0.75	14990					
	3			7.17	7.17	3.3	3.35	0.01	3.31	0.03			0.13	16010		9.5	sat	sat	
	4													15680					
	5		0.3	7.35	7.4	5.3						122		14530					
	6													17160		9	sat	sat	
	7													14220					
	8													9640					
	9													17290					
	10		1.84	7.41	7.4	3.73	7.245	0.01	7.2	0.035	27.7	114	1.13	20300		9	sat	sat	
	11		3.01	7.39	7.4	2.53	7.62	0.01	7.58	0.03		107	1.63	21650					
	12													19680		9	sat	sat	
	13													18640					
	14													13620					
	15													11980					
	16													15250					
	17		3.07	7.45	7.5	0.98	3.38	2.15	1.2	0.03	36	114.5	0.25	19280					
	18		1.79	7.26	7.3	2.86	5.065	0.01	5.03	0.025		117	0.25	14380					
	19													21570		8.5	sat	Unsat	
	20													19510		8	sat	Unsat	
	21													16640					
	22													10330					
	23													19260		8.5	sat	Unsat	
	24		2.08	7.5	7.5	2.67	4.447	0.015	4.4	0.032	32.2		0.75	16230					
	25		0.92	7.39	7.4	2.53	7.405	0.01	7.36	0.035		107.75	0.75	22080		8.5	sat	sat	
	26													18800					
	27													22380					
	28													14460					
	29													20900					
	30													16680		8.5	sat	sat	
	31		4.14	7.15	7.15	0.99	4.765	0.94	3.8	0.025	30.8	102.5	0.13	21270					
	1		1.72	7.23	7.23	2.53	6.645	0.01	6.6	0.035		104	0.13	15880					
	2													19320					

Month - Year		Sample Location	EQ-2	EQ-2	EQ-2	EQ-2	EQ-2	EQ-2	EQ-2	EQ-2	EQ-2	EQ-2	EQ-2			EQ-2	EQ-2	EQ-2	Comments
		PARA METER	BOD5	pH	pH	Dissolved Oxygen	Total Inorganic Nitrogen	Ammonia	Nitrate Nitrogen	Nitrite Nitrogen	Dissolved Sodium	Chloride	Phosphorus	Flow (Meas)	Flow (Calc)	Freeboard	Vegetation	Dike Insp	
		LIMITS		Min	Max									60000	21900000				
	DAY	UNITS	mg/l	6.5	9.0	mg/l	mg/l	mg/l	mg/l	mg/l	mg/l	mg/l	mg/l	GPD	GPY	Feet	Sat/Unsat	Sat/Unsat	
August-07	3													16590		8.5	Sat	Sat	Data from Daily SBR 2007.xls
	4													14780					
	5													10750					
	6													12840					
	7			7.36	7.4	1.55	4.375	0.21	4.1	0.065	32.8	112	0.5	15264		8.5	sat	sat	
	8													25696					
	9		8.05	7.45	7.5	0.98	14.71	13.6	1.08	0.03			1.5	25940					
	10													31210					
	11													21520					
	12													13210					
	13													13630		9	sat	sat	
	14		1.5	7.4	7.4	2.76	7.51	0.28	7.2	0.03	33.2	109	2.5	20090					
	15		0.59	7.31	7.3	3.5	12.265	0.01	12.2	0.055		107.5	3.13	22640		9	sat	sat	
	16													23730					
	17													17970					
	18													14460					
	19													8480					
	20													13910					
	21			7.3	7.3	3.21	6.44	0.01	6.4	0.03	37.9	135.25	0.88	20100		9	sat	sat	
	22													22290					
	23		1.06	7.25	7.25	2.79	10.35	0.01	10.3	0.04			2.25	17680					
	24													19900		9	sat	sat	
	25													17830					
	26													13670					
	27													22300		9	sat	sat	
	28													25010					
	29		1.17	7.2	7.2	2.52	14.14	0.01	14.1	0.03	41.1	128	1	21700					
	30		0.55	7.28	7.3	2.88	21.855	0.01	21.8	0.045		127	1.25	22750					
	31													20260		9	sat	sat	
September-07	1													17880					Data from Daily SBR 2007.xls
	2													18150					
	3													13980			sat	sat	
	4		0.85	7.34	7.3	4.34	5.84	0.01	5.8	0.03	31		0.13	23200		9			
	5		4.47	7.35	7.4	1.12	19.905	9.36	10.5	0.045		121.25	0.5	29630					
	6													29170					
	7													32730		9	sat	sat	
	8													17800					
	9													11930					
	10													19420					
	11		3.97	7.18	7.2	1.28	16.66	8.74	7.9	0.02	42.6	145.5	<0.10	27100		9	sat	sat	
	12		2.92	7.01	7.01	1.05	18.99	5.42	13.5	0.07		144	0.63	25650					
	13													30650		9	sat	sat	
	14													31350					
	15													23410					
	16													22150					
	17													19940					
	18		2.55	7.08	7.1	1.2	27.53	12.1	15.4	0.03	50	141.75	3.5	32410		9	sat	sat	
	19		2.33	7.02	7	0.91	35.075	6.73	28.3	0.045		134	5.13	32190					
	20													31560					
	21													28840					
	22													20590					
	23													20850					
	24													30190					
	25		3.47	7.25	7.3	0.93	33.685	6.16	27.5	0.025	56.4	154.75	2.5	32720					
	26													31380					
	27		3.81	7.18	7.2	1.23							6.13	25360		9	sat	sat	
	28													32320					
	29													29620					
	30													26400					

Month - Year		Sample Location	EQ-2	EQ-2	EQ-2	EQ-2	EQ-2	EQ-2	EQ-2	EQ-2	EQ-2	EQ-2	EQ-2			EQ-2	EQ-2	EQ-2	Comments
		PARA METER	BOD5	pH	pH	Dissolved Oxygen	Total Inorganic Nitrogen	Ammonia	Nitrate Nitrogen	Nitrite Nitrogen	Dissolved Sodium	Chloride	Phosphorus	Flow (Meas)	Flow (Calc)	Freeboard	Vegetation	Dike Insp	
		LIMITS		Min	Max									60000	21900000				
	DAY	UNITS	mg/l	6.5	9.0	mg/l	mg/l	mg/l	mg/l	mg/l	mg/l	mg/l	mg/l	GPD	GPY	Feet	Sat/Unsat	Sat/Unsat	
October-07	1													32560					Data from Daily SBR 2007.xls
	2		15.04	7.18	7.18	1.22	36.72	27.9	8.76	0.06	54.4		1.25	25270					
	3		6.38	7.42	7.42	0.86	32.3	15.9	16.3	0.1		142	1.63	32700		9	Sat	Sat	
	4													33790					
	5													26830					
	6													29760					
	7													26260					
	8					2.12					49.1			26060					
	9													30010					
	10													31050					
	11													29660					
	12		5.33	7.15	7.2	3.91	46.675	0.01	46.6	0.065		143.5	6.32	32240		9	Sat	Sat	
	13													29380					
	14													23650					
	15													28160					
	16													27940		8.5	Sat	Sat	
	17		2.8	7.07	7.1	3.16	37.043	0.02	37	0.023	50.4	134	6.75	33570					
	18		1.8	7.11	7.1	3.15	40.825	0.01	40.8	0.015			4.75	31710					
	19													22730					
	20													22080					
	21													25840					
	22													26040		9	Sat	Sat	
	23		7.91	7.2	7.2	1.61	18.42	8.56	9.84	0.02	46.5		2.75	25630					
	24		4.45	7.12	7.1	1.74	24.005	0.37	23.6	0.035		144.25	2.38	22260					
	25													29980					
	26													25530		9	Sat	Sat	
	27													27070					
	28													20810					
	29													23260		9	Sat	Sat	
	30													26180					
	31		2.39	7.17	7.17	3.76	25.885	0.01	25.8	0.075	44.2	144	1.38	27180					
November-07	1													21540		9	sat	sat	Data from Daily SBR 2007.xls
	2													22490					
	3													15310					
	4													16440					
	5													15250					
	6													19550					
	7		4.08	7.25	7.25	5.68	28.925	0.01	28.9	0.015	43	152.9	0.5	17730		9	sat	sat	
	8													16170					
	9													15880					
	10													14120					
	11													9120					
	12													18400					
	13													18300		9	sat	sat	
	14													18100					
	15		3.24	7.38	7.38	2.71	14.04	0.01	13.9	0.13	40.8	147.9	0.38	18100					
	16													17100		9	sat	sat	
	17													8600					
	18													8300					
	19													16800					
	20		4.3	7.12	7.12	2.78	17.51	0.01	17.3	0.2	37.6	136.9	0.13	16700					
	21													14040		9	sat	sat	
	22													8930					
	23													6670					
	24													8270					
	25													8040					
	26													15020					
	27													19240					
	28		5.33	7.52	7.52	3.03	29.435	0.01	29.4	0.025	40.2	145	0.56	15490		9	sat	sat	

Month - Year		Sample Location	EQ-2	EQ-2	EQ-2	EQ-2	EQ-2	EQ-2	EQ-2	EQ-2	EQ-2	EQ-2	EQ-2			EQ-2	EQ-2	EQ-2	Comments
		PARA METER	BOD5	pH	pH	Dissolved Oxygen	Total Inorganic Nitrogen	Ammonia	Nitrate Nitrogen	Nitrite Nitrogen	Dissolved Sodium	Chloride	Phosphorus	Flow (Meas)	Flow (Calc)	Freeboard	Vegetation	Dike Insp	
		LIMITS		Min	Max									60000	21900000				
	DAY	UNITS	mg/l	6.5	9.0	mg/l	mg/l	mg/l	mg/l	mg/l	mg/l	mg/l	mg/l	GPD	GPY	Feet	Sat/Unsat	Sat/Unsat	
	29													19980					
	30													15810		9	sat	sat	
December-07	1													13890					Data from Daily SBR 2007.xls
	2													9080					
	3													15630					
	4													16520		9	sat	sat	
	5													14950					
	6													18910					
	7		3.78	7.2	7.2	3	24.515	0.9	23.6	0.015	43.4	132	1.63	16380					
	8													14660					
	9													9970					
	10													14720		9	sat	sat	
	11		6.74	7.27	7.27	2.51	10.325	2.1	8.21	0.015	49		0.88	13150					
	12		7.92	7.25	7.25	2.76	10.409	0.874	9.5	0.035		149.5	0.69	18080					
	13													16660					
	14													17350					
	15													13020					
	16													9520					
	17													15080					
	18		12.09	7.23	7.23	2.9	5.375	1.73	3.62	0.025	42.4	136.5	1.07	12710		9	sat	sat	
	19													16440					
	20													13060					
	21													16380					
	22													11050					
	23													8950					
	24													14350		9	sat	sat	
	25													8720					
	26		1.34	7.48	7.5	8.25	7.24	0.05	7.17	0.02	38.6	146.5	0.13	14870					
	27													14480		9	sat	sat	
	28													14250					
	29													11260					
	30													7200					
	31													12530					
January-08	1													10520					Data from Daily SBR 2008.xls
	2		0.36	7.32	7.32	8.32					31.3	141	0.13	14660					
	3		4.63	7.19	7.19	4.99	36.977	1.16	35.8	0.017		139	0.13	16650					
	4													13650		9	sat	sat	
	5													11560					
	6													7230					
	7													14580					
	8		0.93	7.15	7.15	5.29	39.235	0.02	39.2	0.015	39	144.5	0.13	16300					
	9		4.04	7.38	7.38	3.13	37.58	3.95	33.6	0.03		147.5	0.13	22740		9	sat	sat	
	10													16320		9	sat	sat	
	11													18270					
	12													8930					
	13													9080					
	14													15730					
	15		2.15	7.16	7.16	2.64	14.1	3.69	10.4	0.01	40.5	134	0.13	14890		8.5	sat	sat	
	16		4.77	7.23	7.23	2.73	18.325	8.01	10.3	0.015			0.25	16800					
	17													13250					
	18													17730					
	19													10250					
	20													8870					
	21													13400		9	sat	sat	
	22													13520					
	23		0.91			2.03					43.5		0.88	19350					
	24		3.62	7.28	7.28	2.15	17.02	6.4	10.6	0.02		154	0.88	14930					
	25													17690		9	sat	sat	
	26													10070					

Month - Year		Sample Location	EQ-2	EQ-2	EQ-2	EQ-2	EQ-2	EQ-2	EQ-2	EQ-2	EQ-2	EQ-2	EQ-2			EQ-2	EQ-2	EQ-2	Comments
		PARA METER	BOD5	pH	pH	Dissolved Oxygen	Total Inorganic Nitrogen	Ammonia	Nitrate Nitrogen	Nitrite Nitrogen	Dissolved Sodium	Chloride	Phosphorus	Flow (Meas)	Flow (Calc)	Freeboard	Vegetation	Dike Insp	
		LIMITS		Min	Max									60000	21900000				
	DAY	UNITS	mg/l	6.5	9.0	mg/l	mg/l	mg/l	mg/l	mg/l	mg/l	mg/l	mg/l	GPD	GPY	Feet	Sat/Unsat	Sat/Unsat	
	27													9580					
	28													14660					
	29		2.42	7.48	7.48	4.17	17.52	0.7	16.8	0.02	51.8	161.4	0.13	16440		8.5	sat	sat	
	30													18490					
	31		3.94	7.05	7.05	3.48	25.36	2.64	22.7	0.02			0.38	14440					
February-08	1						0							16380					Data from Daily SBR 2008.xls
	2						0							10580					
	3						0							12000					
	4						0							14120					
	5		3.22	7.2	7.2	2.91	25.775	2.55	23.2	0.025	50.7	154.5	0.75	18330		9	sat	sat	
	6		4.51	7.14	7.14	1.17	27.895	4.57	23.3	0.025		149.5	1.25	14840					
	7						0							17990					
	8						0							17730		9	sat	sat	
	9						0							11900					
	10						0							11090					
	11						0							12130					
	12		4	7.25	7.25	1.4	12.875	0.75	12.1	0.025	49.2		0.81	18340		9	sat	sat	
	13		3.43	7.15	7.15	4.39	0					145.5		14670					
	14						0							19770					
	15						0							14470					
	16						0							14400					
	17						0							9030					
	18						0							14190					
	19		3.86	7.06	7.06	1.57	13.89	0.17	13.7	0.02	47.7	145	0.75	14600					
	20		2.97	7.02	7.02	3.99	28.125	0.01	28.1	0.015			0.75	16060		9	sat	sat	
	21						0							17820					
	22						0							15680					
	23						0							17270					
	24						0							14690					
	25						0							12280		9	sat	sat	
	26		3.62	7.05	7.1	2.25	23.545	0.13	23.4	0.015	51	140	2	20500					
	27		6.16	7.1	7.1	0.93	27.195	1.07	26.1	0.025			2.88	20510					
	28						0							18330					
	29						0							22920					
March-08	1													13920					Data from Daily SBR 2008.xls
	2													14260					
	3													7220					
	4													17520		8.5	Sat	Sat	
	5		3.57	7.31	7.31	3.1	15.338	0.415	14.9	0.023	40.7	130	1	27310					
	6													24200					
	7													18150					
	8													17540					
	9													13940					
	10													17130		9	sat	sat	
	11		4.09			1.35						131	0.13	28320					
	12		10.95	7.25	7.3	1.05	23.84	4.4	19.4	0.04	41.6	127.5	0.13	28330					
	13													24820					
	14													22800		9	sat	sat	
	15													16870					
	16													14920					
	17													14230					
	18													28960					
	19		8.93	7.27	7.3	2.06	32.867	5.02	27.8	0.047	45.2	129.5	1.25	25390					
	20		4.14	7.09	7.1	3.52	43.265	0.74	42.5	0.025		133	1.88	29230		8.5	sat	sat	
	21													22570					
	22													13140					
	23													16510					
	24													23730					
	25													29260					

Month - Year		Sample Location	EQ-2	EQ-2	EQ-2	EQ-2	EQ-2	EQ-2	EQ-2	EQ-2	EQ-2	EQ-2	EQ-2			EQ-2	EQ-2	EQ-2	Comments
		PARA METER	BOD5	pH	pH	Dissolved Oxygen	Total Inorganic Nitrogen	Ammonia	Nitrate Nitrogen	Nitrite Nitrogen	Dissolved Sodium	Chloride	Phosphorus	Flow (Meas)	Flow (Calc)	Freeboard	Vegetation	Dike Insp	
		LIMITS		Min	Max									60000	21900000				
	DAY	UNITS	mg/l	6.5	9.0	mg/l	mg/l	mg/l	mg/l	mg/l	mg/l	mg/l	mg/l	GPD	GPY	Feet	Sat/Unsat	Sat/Unsat	
	26		8.33	7.23	7.2	0.92	47.75	12.1	35.6	0.05	47	136.5	1.88	26280		9	sat	sat	
	27													28940					
	28													25880					
	29													27500					
	30													23040					
	31													35970					
April-08	1													37140					Data from Daily SBR 2008.xls
	2		6.63	7.31	7.31	1.48	50.593	19.1	31.2	0.293	48.1	128	1.2	38720		9	Sat	Sat	
	3													30270					
	4													29680		8.5	Sat	Sat	
	5													28850					
	6													24210					
	7													30070					
	8		14.55	7.07	7.1	1.74	57.93	47.7	10.2	0.03	53.8	140	2.63	33390					
	9		14.6	6.96	7	1.04	65.725	31.8	33.9	0.025		136.5	4	24510		9	Sat	Sat	
	10													29900					
	11													29990		8.5	Sat	Sat	
	12													26360					
	13													30100					
	14													25760					
	15													28350		9	Sat	Sat	
	16		3.02	6.71	6.7	2.52	60.82	0.2	60.6	0.02	53.9	141.5	5.5	29420					
	17		2.52	6.87	6.9	2.62	55.92	0.1	55.8	0.02		143	5	32370					
	18													30650		9	Sat	Sat	
	19													22480					
	20													24710					
	21													30040					
	22		1.58	7.06	7.1	3.21	33.425	0.01	33.4	0.015	42.4		2.38	24480		8.5	Sat	Sat	
	23		2.14	7.1	7.1	3.39	30.53	0.01	30.5	0.02		144.5	3.5	23550					
	24													24770					
	25													20680		9	Sat	Sat	
	26													22930					
	27													17280					
	28													17750					
	29		3.05	7.22	7.2	4.06	15.93	0.01	15.9	0.02	42	141.25	1.75	17220		9	Sat	Sat	
	30		4.05	7.27	7.3	3.41	13.915	0.08	13.8	0.035			3.13	19370					
May-08	1													21990					Data from Daily SBR 2008.xls
	2													23210					
	3													13730					
	4													12940					
	5													15760					
	6		2.25	7.32	7.3	4.51	6.455	0.01	6.42	0.025	39.6	135.5	1.38	16920		9	sat	sat	
	7		3.89	7.41	7.4	4	11.62	0.01	11.6	0.01		134.5	1.88	22160					
	8													19780					
	9													22820		9	sat	sat	
	10													15440					
	11													15430					
	12													7930					
	13			7.26	7.3	4.5	12.53	0.01	12.5	0.02	39.1	132	1.25	18550					
	14													19670					
	15													24910		9	sat	sat	
	16		1.98	7.25	7.3	4.68								18740		9	sat	sat	
	17													20370					
	18													10550					
	19													18670		8.5	sat	sat	
	20			7.25	7.3	1.96	16.938	1.11	15.8	0.028	38.1		0.63	19250					
	21													20590					
	22		2.07	7.15	7.2	4.905	20.045	0.02	20	0.025		125.5	1.38	14640		9	sat	sat	
	23													18450					

Month - Year		Sample Location	EQ-2	EQ-2	EQ-2	EQ-2	EQ-2	EQ-2	EQ-2	EQ-2	EQ-2	EQ-2	EQ-2			EQ-2	EQ-2	EQ-2	Comments
		PARA METER	BOD5	pH	pH	Dissolved Oxygen	Total Inorganic Nitrogen	Ammonia	Nitrate Nitrogen	Nitrite Nitrogen	Dissolved Sodium	Chloride	Phosphorus	Flow (Meas)	Flow (Calc)	Freeboard	Vegetation	Dike Insp	
		LIMITS		Min	Max									60000	21900000				
	DAY	UNITS	mg/l	6.5	9.0	mg/l	mg/l	mg/l	mg/l	mg/l	mg/l	mg/l	mg/l	GPD	GPY	Feet	Sat/Unsat	Sat/Unsat	
	24													14850					
	25													16800					
	26													11590					
	27													19230					
	28		1.97	7.47	7.5	4.16	18.33	0.01	18.3	0.02	28.9	119.5	0.5	19300					
	29		1.78	7.39	7.4	3.74	23.235	0.01	23.2	0.025		119.25	1.13	24600		8.5	sat	sat	
	30													18430					
	31													17790					
June-08	1													11430					Data from Daily SBR 2008.xls
	2													18270		9	sat	sat	
	3		1.59	7.33	7.33	1.53	9.385	0.15	9.2	0.035	34.1	115	0.05	17780					
	4		5.02	7.03	7.03	1.01	14.805	2.19	12.6	0.015			1.25	21410					
	5													18440					
	6													21360		8.5	sat	sat	
	7													11950					
	8													17290					
	9													17640		9	sat	sat	
	10		1.6	7.38	7.4	1.1	11.975	1.95	10	0.025	35.5	123	1.63	24790					
	11		1.26	7.33	7.33	3.09	18.11	0.085	18	0.025			0.88	19110					
	12													20630		9	sat	sat	
	13													20220					
	14													21370					
	15													17510					
	16													26330		9	sat	sat	
	17													26280					
	18													23180		8.5	sat	sat	
	19		2.97	7.43	7.4	2.32	19.583	0.35	19.2	0.033	33.3	108	6	25270					
	20													19190					
	21													20400					
	22													14670					
	23													19500		9	sat	sat	
	24		1.14	7.46	7.5	4.69	9.09	0.01	9.05	0.03	29.5	111	0.88	22100					
	25		2.1	7.28	7.3	2.93	17.495	0.18	17.3	0.015			1.75	22650					
	26													24500		9	sat	sat	
	27													17710					
	28													18250					
	29													11780					
	30													16520					
July-08	1		1.9	7.29	7.29	2.2	8.495	0.18	8.3	0.015	34.2	120	1.38	16100		9	sat	sat	Data from Daily SBR 2008.xls
	2													16880					
	3													16040					
	4													14230					
	5													13760					
	6													9370					
	7													20670					
	8		0.9	7.54	7.5	5.8	12.44	0.01	12.4	0.03	30	126	1.25	14730		9	sat	sat	
	9		1.46	7.32	7.3	3.64	18.335	0.01	18.3	0.025			1.38	20980					
	10													19160		8.5	sat	sat	
	11													22830					
	12													13260					
	13													15630					
	14													14360		9	sat	sat	
	15		1.91	7.34	7.34	2.57	16.545	0.01	16.5	0.035	34.2	119.5	1.63	21590					
	16		1.9	7.39	7.4	3.74	20.03	0.01	20	0.02		120.5	1.38	16220					
	17													20570		8.5	sat	sat	
	18													17870					
	19													19120					
	20													13640					
	21													16010		8.5	sat	sat	

Month - Year		Sample Location	EQ-2	EQ-2	EQ-2	EQ-2	EQ-2	EQ-2	EQ-2	EQ-2	EQ-2	EQ-2	EQ-2			EQ-2	EQ-2	EQ-2	Comments
		PARA METER	BOD5	pH	pH	Dissolved Oxygen	Total Inorganic Nitrogen	Ammonia	Nitrate Nitrogen	Nitrite Nitrogen	Dissolved Sodium	Chloride	Phosphorus	Flow (Meas)	Flow (Calc)	Freeboard	Vegetation	Dike Insp	
		LIMITS		Min	Max									60000	21900000				
	DAY	UNITS	mg/l	6.5	9.0	mg/l	mg/l	mg/l	mg/l	mg/l	mg/l	mg/l	mg/l	GPD	GPY	Feet	Sat/Unsat	Sat/Unsat	
	22		2.15	7.34	7.3	3.01	8.928	0.01	8.9	0.018	31.5	116	1	18100					
	23		2.5	7.39	7.4	3.38	12.24	0.01	12.2	0.03		117	1.25	21080					
	24													21240		8.5	sat	sat	
	25													23820					
	26													15420					
	27													14060					
	28													16940		9	sat	sat	
	29		2.13	7.2	7.2	3.09	7.835	0.01	7.8	0.025	29.8	110	0.63	27260					
	30		3.6	7.27	7.3	2.8	13.425	0.3	13.1	0.025		105.25	1.75	22330					
	31													24820					
August-08	1													19300					Data from Daily SBR 2008.xls
	2													18000					
	3													11040					
	4													19440					
	5													17700					
	6		1.94	7.01	7	2.47	18.26	0.035	18.2	0.025			0.88	21580					
	7		1.32	7.15	7.2	3.96	24.53	0.01	24.5	0.02			1.3	17390					
	8						0							21220					
	9						0							11680					
	10						0							14170					
	11						0							12140					
	12																		
	13																		
	14																		
	15																		
	16																		
	17																		
	18																		
	19																		
	20																		
	21																		
	22																		
	23																		
	24																		
	25																		
	26																		
	27																		
	28																		
	29																		
	30																		
	31																		

No. Observations	293	299	159	217	302	284	268	281	125	170	293	1319
Minimum	0.1	6.58	6.58	0.7	0	0.01	0.5	0.003	26.6	95	0.01	4770
Average	3.2	7.3	7.2	2.9	18.1	2.1	17.9	0.3	38.2	127.3	1.2	18605.8
Maximum	15.04	8.07	7.6	8.32	68.67	47.7	61	16.04	56.4	161.4	6.75	43360
90th Percentile	6.4	7.7	7.4	5.1	39.9	7.5	35.4	0.2	48.6	145.6	2.7	26290.0
95th Percentile	8.3	7.8	7.5	5.7	47.8	10.4	41.6	0.6	50.9	152.5	3.6	30287.0

	Wells: Static water elevation (ft)									
Date	**1A**	**8**	**11**	**12**	**13**	**14**	**15**	**16**	**18**	**19**
2/10/2000	601.4	605.37	595.3	590.3	596.6	601.0	605.8	611.9	599.9	589.5
5/9/2000	602.1	607.7	595.6	590.6	596.9	601.3	606.5	612.9	600.4	589.6
8/1/2000	603.4	609.1	597.2	591.9	598.1	602.3	607.2	613.6	601.8	590.6
1/15/2001		608.6		591.5						590.23
1/16/2001	603.9				598.10					
2/15/2001				591.85						590.6
4/24/2001	604.00	608.43		591.91	598.70					590.9
5/17/2001										590.8
6/5/2001	604.12	608.50		592.08	598.80					590.8
7/12/2001	603.94	608.14		592.05	598.78					591.3
10/8/2001	605.45	607.76		592.35	598.60					591.3
1/15/2002	604.51	608.29		592.26	598.75					591.0
4/23/2002	604.95	608.58		592.75	600.35					591.31
7/24/2002	606.14	607.97		593.26	599.76					592.10
10/22/2002	604.67	606.85		592.69	598.80					591.56
1/20/2003	604.84	606.70		592.30	598.30					590.94
4/21/2003	604.14	608.03		592.44	598.47					590.78
7/29/2003	604.37	608.29		592.91	599.10					591.38
10/22/2003	603.64	607.09		592.35	598.25					590.93
1/19/2004	603.14	607.81		592.37	598.23					590.65
4/19/2004	604.50	607.96		592.38	598.60					590.68
7/19/2004	603.99	607.86		592.65	598.75					591.38
10/18/2004	603.13	609.74		592.23	598.04					591.18
1/19/2005	603.70	609.30		592.80	598.80					591.53
4/18/2005	605.14	608.39		592.90	599.50					591.53
7/18/2005	604.44	607.00		592.77	598.95					591.48
10/17/2005	603.19	607.09		592.17	598.06					591.18
1/16/2006	602.49	608.41		591.80	597.80					591.03
4/17/2006	603.44	608.20		592.29	598.41			613.60		590.92
7/17/2006	603.21	607.54		592.20	598.35			612.86		591.18
10/16/2006	602.74	608.21		592.00	598.05			613.26		591.18
1/15/2007	604.25	608.94		592.62	599.15			614.07		591.62
4/16/2007	604.87	608.94		592.87	601.78			614.18		591.94
7/16/2007	604.33	607.35		592.57	599.20			612.65		591.68
10/15/2007	605.59	608.71		593.36	600.45			614.04		592.69
1/21/2008	605.14	609.31	609.40	593.11	600.05	620.08	614.38	614.16		592.44
4/21/2008	605.62	609.30		593.05	600.15			614.46		592.36

No. Observations	34	34	4	35	34	4	4	12	3	36
Minimum	601.40	605.37	595.30	590.30	596.60	601.00	605.80	611.90	599.90	589.50
Average	604.07	608.10	599.38	592.33	598.78	606.17	608.47	613.47	600.70	591.17
Maximum	606.14	609.74	609.40	593.36	601.78	620.08	614.38	614.46	601.80	592.69
90th Percentile	605.36	609.24	605.74	592.99	600.12	614.75	612.23	614.18	601.52	592.02
95th Percentile	605.60	609.30	607.57	593.16	600.39	617.41	613.30	614.31	601.66	592.38

	Wells: pH, Standard Units									
Date:	1A	8	11	12	13	14	15	16	18	19
02/10/00	6.8	6.9	7.3	7.4	6.7	6.9	6.7	7.1	6.5	7.3
05/09/00	7.0	6.9	7.2	7.9	7.1	7.0	6.8	7.3	7.3	7.8
08/01/00	8.1	7.6	7.0	8.1	7.4	7.2	7.3	7.6	7.4	7.8
10/19/00	7.7	7.5	7.3	8.3	7.2	7.2	6.7	7.1	7.4	8.1
01/15/01		7.3		7.4						7.2
01/16/01	6.7				6.7					
02/14/01										
02/15/01				7.7						7.3
03/13/01										7.4
04/24/01	7.3	6.9		7.9	7.0					7.5
05/17/01										6.50
06/05/01	7.38	7.06		7.97	7.11					7.56
07/12/01	7.49	7.02		7.94	7.13					7.20
10/08/01	6.7	6.7		7.7	7.1					7.1
01/15/02	7.1	7.0		7.4	7.2					7.6
04/23/02	7.0	6.4		7.4	6.9					7.2
07/24/02	7.15	7.11		7.95	6.89					7.57
10/22/02	6.99	6.66		8.02	7.03					7.18
01/20/03	6.63	6.99		7.99	7.16					7.56
04/21/03	6.91	6.51		7.80	6.62					7.73
07/29/03	6.63	6.78		7.78	6.91					7.49
10/20/03	6.5	6.4		7.2	6.7					7.2
01/19/04	6.5	6.6		7.4	7.1					6.9
04/19/04	7.3	6.6		7.4	7.1					7.0
07/19/04	6.8	6.9		7.9	7.0					7.5
10/18/04	6.8	6.6		7.6	7.1					7.0
01/19/05	6.3	6.6		7.9	6.6					7.65
04/18/05	6.7	6.8		7.5	6.5					7.3
07/18/05	6.7	6.9		7.5	6.7					6.8
10/17/05	6.5	6.5		7.7	7.0					7.4
01/16/06	6.3	6.5		7.8	6.7					7.0
04/17/06	6.3	7		7.5	6.7			7.2		7.0
07/17/06	6.7	7.1		7.8	7.1			7.2		7.4
10/16/06	6.7	7.1		8.0	7.0			7.2		7.5
01/15/07	6.7	6.8		7.6	7.0			7.0		7.1
04/16/07	6.7	6.8		7.7	7.0			7.0		7.2
07/16/07	6.6	7.0		7.9	7.7			7.1		7.5
10/15/07	6.9	6.5		7.7	7.0			7.1		7.4
01/21/08	6.5	6.5		7.5	7.0			6.7		6.9
04/21/08	6.4	6.4		7.4	6.6			6.7		7.1

No. Observations	35	35	4	36	35	4	4	13	4	38
Minimum	6.3	6.4	7	7.2	6.5	6.9	6.7	6.7	6.5	6.5
Average	NA	NA	NA	NA	NA	NA	NA	NA	NA	NA
Maximum	8.1	7.6	7.32	8.25	7.65	7.21	7.3	7.6	7.4	8.09
90th Percentile	7.3	7.1	7.3	8.0	7.2	7.2	7.2	7.3	7.4	7.7
95th Percentile	7.5	7.4	7.3	8.0	7.3	7.2	7.2	7.4	7.4	7.8

	Wells: Chloride, mg/l									
Date:	1A	8	11	12	13	14	15	16	18	19
02/15/00	11.3	53.4	11.7	8.7	16.8	67.7	45.2	22.3	29.7	26.0
05/09/00	10.1	90.4	10.1	8.0	24.7	50.8	40.2	49.1	29.6	22.3
07/31/00	7.6	34.3	8.2	7.3	28.7	52.9	54.0	69.3	36.8	22.7
1/16/2001	9.0	28.0		10.0	35.0					23
2/15/2001	8	37		7	41					20
3/13/2001	10	34		10	49					18
4/24/2001	12	33		11	51					22
5/17/2001	13	35		12	52					22
6/5/2001	13	35		13	53					19
7/12/2001	13	34		11	50					20
10/8/2001	10	33		9	44					24
1/15/2002	10	65		12	58					26
4/23/2002	12	33		10	41					27
7/24/2002	12	33		13	52					29
10/22/2002	11	46		11	81					29
1/20/2003	16	64		16	45					32
4/21/2003	4	49		10	52					35
7/29/2003	16	61		12	57					30
10/20/2003	4	32		4	85					25
1/19/2004	8	49		10	66					29
4/19/2004	8	41		8	51					30
7/19/2004	11	38		7	59					28
10/18/2004	11	40		9	61					30
1/19/2005	8	63		7	64					31
4/18/2005	8	53		9	75					32
7/18/2005	12	48		13	91					39
10/17/2005	9	102		7	113					36
1/23/2006	9	77		8	76					34
4/17/2006	9	44		8	75			77		34
7/17/2006	14	46		8	77			142		40
10/16/2006	9	35		14	66			88		38
1/15/2007	12	40		10	57			76		38
4/16/2007	19	45		9	52			92		42
7/16/2007	16.0	53.4		13.4	54.5			126		44.3
10/15/2007	15.9	64.1		14.8	57.9			87.4		48.4
1/21/2008	12.7	62.6		13.3	55.3			62.2		47.2
4/21/2008	10.4	72.3		12.7	53.0			156.0		42.6

No. Observations	37	37	3	37	37	3	3	12	3	37
Minimum	4	28	8	4	17	51	40	22	30	18
Average	11	49	10	10	57	57	46	87	32	31
Maximum	19	102	12	16	113	68	54	156	37	48
90th Percentile	16	68	11	13	79	65	52	140	35	42
95th Percentile	16	80	12	14	86	66	53	148	36	45

	Wells: Specific Conductivity, umho									
Date:	1A	8	11	12	13	14	15	16	18	19
2/15/2000	289	536	971	383	372	572	290	306	406	585
5/9/2000	420	715	482	431	475	565	360	510	638	421
8/1/2000	312	396	446	433	484	566	342	587	420	609
10/19/2000	287	446	440	475	531	681	594	716	479	675
1/15/2001		462		416						622
1/16/2001	359				531					
2/15/2001				483						632
3/13/2001										624
4/24/2001	498	430		650	653					577
5/17/2001										552
6/5/2001	527	425		536	669					602
7/12/2001	504	404		440	634					543
10/8/2001	507	542		394	582					573
1/15/2002	467	625		376	600					554
4/23/2002	474	410		508	558					524
7/24/2002	399	498		545	599					547
10/22/2002	450	520		591	734					548
1/20/2003	448	665		520	601					533
4/21/2003	512	603		543	665					542
7/29/2003	385	547		490	646					572
10/20/2003	231	437		465	693					556
1/19/2004	566	573		550	695					569
4/19/2004	436	436		520	598					518
7/19/2004	452	473		468	645					544
10/18/2004	546	537		460	735					594
1/19/2005	441	653		560	727					545
4/18/2005	508	562		513	747					570
7/18/2005	422	470		506	712					568
10/17/2005	598	799		525	841					601
1/16/2006	443	818		520	736					609
4/17/2006	486	522		531	711			667		591
7/17/2006	646	451		610	624			784		534
10/16/2006	436	560		525	648			685		544
1/15/2007	512	451		505	634			644		583
4/16/2007	475	466		561	611			672		557
7/16/2007	655	484		664	633			810		556
10/15/207	696	583		601	595			644		573
1/21/2008	580	578		645	661			651		633
4/21/2008	546	653		734	571			960		590

No. Observations	35	35	4	36	35	4	4	13	4	38
Minimum	231	396	440	376	372	565	290	306	406	421
Average	471.8	535.142857	584.75	518.805556	632.885714	596	396.5	664.307692	485.75	570.263158
Maximum	696	818	971	734	841	681	594	960	638	675
90th Percentile	590.8	660.2	824.3	627.5	734.6	648.3	523.8	804.8	590.3	622.6
95th Percentile	648.7	740.2	897.65	653.5	739.3	664.65	558.9	870	614.15	632.15

	Wells: Total Inorganic Nitrogen, mg/l					
Date:	1A	8	12	13	16	19
07/31/00	0.930	0.310	0.250	0.160		0.210
01/15/01	2.03	0.570	0.430	0.270		0.360
01/16/01	2.030	0.570	0.430	0.270		0.360
02/15/01	2.170	0.120	0.810	0.700		1.510
03/13/01	2.710	0.150	0.610	0.540		0.520
04/24/01	2.64	0.020	0.330	0.200		0.260
05/17/01	2.76	0.02	0.34	0.23		0.29
06/05/01	2.89	0.21	0.35	0.25		0.32
07/12/01	4.61	0.12	0.30	0.25		0.33
10/08/01	0.52	4.01	0.27	0.20		0.36
01/15/02	1.70	<0.01	0.25	0.21		0.36
04/23/02	2.94	<0.01	0.27	0.18		0.35
07/24/02	3.19	1.16	0.26	0.23		0.35
10/22/2002	0.39	0.03	0.28	0.25		0.35
1/21/2003	1.11	0.02	0.27	0.2		0.35
4/21/2003	3.76	0.02	0.26	0.19		0.35
7/31/2003	2.38	0.16	0.30	0.33		0.41
10/20/2003	1.05	0.13	0.28	0.3		0.37
01/19/04	2.48	0.03	0.03	0.23		0.23
04/19/04	3.45	<0.01	0.24	0.21		0.34
07/19/04	4.87	0.30	0.24	0.28		0.35
10/18/2004	2.61	1.02	0.21	0.31		0.37
1/19/2005	2.15	0.09	0.32	0.37		0.44
4/18/2005	16.7	0.02	0.24	0.32		0.40
5/23/2005	3.17					
7/18/2005	1.76	1.72	0.23	0.27		0.34
10/17/2005	3.06	0.28	0.23	0.22		0.21
1/23/2006	2.39	0.11	0.87	0.41		0.5
4/17/2006					0.97	
7/17/2006	2.4	0.2	0.9	0.5	1.01	0.6
10/16/2006	1.8	0.9	0.7	0.4	0.1	0.5
1/15/2007	1.1	0.1	0.5	0.3	1.0	0.4
4/16/2007	2.29	0.1	0.4	0.3	0.4	0.5
7/16/2007	2.39	0.2	0.5	0.3	0.57	0.4
10/15/2007	4.5	0.1	0.5	0.5	1.4	0.6
1/21/2008	1.45	0.26	0.5	0.31	0.84	0.36
4/21/2008	2.61	0.16	0.37	0.41	0.59	

No. Observations	36	32	35	35	9	34
Minimum	0.390	0.020	0.030	0.160	0.140	0.210
Average	2.806	0.413	0.377	0.302	0.772	0.409
Maximum	16.700	4.010	0.900	0.700	1.430	1.510
90th Percentile	4.15	1.005	0.646	0.452	1.094	0.517
95th Percentile	4.675	1.412	0.828	0.512	1.262	0.574

Censored values treated as 1/2 the MDL.

No. Observations	36	35	35	35	9	34
Minimum	0.390	0.005	0.030	0.160	0.140	0.210
Average	2.806	0.378	0.377	0.302	0.772	0.409
Maximum	16.700	4.010	0.900	0.700	1.430	1.510
90th Percentile	4.150	0.960	0.646	0.452	1.094	0.517
95th Percentile	4.675	1.328	0.828	0.512	1.262	0.574

	Wells: AMMONIA , (mg/l)									
Date:	1A	8	11	12	13	14	15	16	18	19
2/15/2000	<0.05	<0.05	0.16	0.23	0.15	0.21	0.12	<0.05	0.25	0.18
5/9/2000	<0.03	<0.03	0.24	0.18	0.11	0.33	0.18	<0.03	0.24	0.2
7/31/2000	<0.03	0.3	0.11	0.25	0.16	0.32	0.25	<0.03	0.24	0.21
1/15/2001	0.05	0.04		0.43	0.27					0.36
1/16/2001										
2/15/2001	0.11	0.12		0.79	0.68					1.51
3/13/2001	0.33	0.11		0.58	0.52					0.50
4/24/2001	<0.01	<0.01		0.32	0.20					0.26
5/17/2001	<0.01	<0.01		0.32	0.21					0.27
6/5/2001	<0.01	0.05		0.32	0.23					0.30
7/12/2001	<0.01	0.05		0.27	0.22					0.30
10/8/2001	<0.01	<0.01		0.25	0.18					0.34
1/15/2002	<0.01	<0.01		0.25	0.21					0.36
4/23/2002	<0.01	<0.01		0.27	0.18					0.35
7/24/2002	0.4	0.04		0.26	0.23					0.35
10/22/2002	0.06	0.03		0.28	0.25					0.35
1/20/2003	0.07	0.02		0.27	0.20					0.35
4/21/2003	0.4	0.02		0.25	0.19					0.34
7/29/2003	0.32	0.01		0.23	0.24					0.33
10/20/2003	0.52	0.07		0.24	0.25					0.32
1/19/2004	0.70	0.03		0.23	0.22					0.32
4/19/2004	0.19	<0.01		0.24	0.21					0.34
7/19/2004	<0.01	0.01		0.20	0.24					0.31
10/8/2004	0.06	<0.01		0.18	0.31					0.35
1/19/2005	<0.01	<0.01		0.23	0.27					0.36
4/18/2005	<0.01	0.02		0.24	0.32					0.40
5/23/2005	0.11									
7/18/2005	<0.01	<0.01		0.02	0.11					0.17
10/17/2005	<0.01	<0.01		0.02	0.05					0.05
1/23/2006	0.11	0.1		0.87	0.41					0.48
4/17/2006	0.3	0.2		0.8	0.4			<0.1		0.5
7/17/2006	0.1	0.2		0.9	0.5			0.2		0.6
10/16/2006	0.1	<0.1		0.6	0.3			<0.1		0.4
1/15/2007	<0.1	<0.1		0.4	0.2			0.1		0.3
4/16/2007	0.2	0.1		0.4	0.3			<0.1		0.3
7/16/2007	<0.1	0.2		0.5	0.3			<0.1		0.4
10/15/2007	<0.1	<0.1		0.4	0.3			<0.1		0.4
1/21/2008	<0.05	0.08		0.35	0.31			<0.05		0.36
4/21/2008	0.16	<0.05		0.26	0.28			0.36		0.39

No. Observations	19	21	3	37	37	3	3	3	3	37
Minimum	0.05	0.01	0.11	0.02	0.05	0.21	0.12	0.1	0.24	0.05
Average	0.23	0.09	0.17	0.35	0.26	0.29	0.18	0.22	0.24	0.37
Maximum	0.7	0.3	0.24	0.9	0.68	0.33	0.25	0.36	0.25	1.51
90th Percentile	0.424	0.2	0.224	0.676	0.404	0.328	0.236	0.328	0.248	0.488
95th Percentile	0.538	0.2	0.232	0.814	0.504	0.329	0.243	0.344	0.249	0.52

Censored values treated as 1/2 the MDL

No. Observations	38	37	3	37	37	3	3	12	3	37
Minimum	0.005	0.005	0.11	0.02	0.05	0.21	0.12	0.015	0.24	0.05
Average	0.12	0.06	0.17	0.35	0.26	0.29	0.18	0.08	0.24	0.37
Maximum	0.7	0.3	0.24	0.9	0.68	0.33	0.25	0.36	0.25	1.51
90th Percentile	0.351	0.152	0.224	0.676	0.404	0.328	0.236	0.19	0.248	0.488
95th Percentile	0.418	0.2	0.232	0.814	0.504	0.329	0.243	0.272	0.249	0.52

	Wells: NITRITE - (mg/l)					
Date:	1A	8	12	13	16	19
2/15/2000	<0.05	0.02	<0.1	<0.05		<0.05
5/9/2000	0.02	0.20	<0.1	<0.02		<0.02
7/31/2000	<0.1	0.01	<0.1	<0.02		<0.02
1/16/2001	0.10	0.53	<0.01	<0.01		<0.01
2/15/2001	0.07	<0.01	<0.01	<0.01		<0.01
3/13/2001	0.23	<0.01	<0.01	<0.01		<0.01
4/24/2001	0.12	<0.01	<0.01	<0.01		<0.01
5/17/2001	0.06	<0.01	<0.01	<0.01		<0.01
6/5/2001	0.06	0.01	<0.01	0.01		<0.01
7/12/2001	0.14	<0.01	<0.01	<0.01		<0.01
10/8/2001	<0.01	0.01	<0.01	<0.01		<0.01
1/15/2002	0.24	<0.01	<0.01	<0.01		<0.01
4/23/2002	0.05	<0.01	<0.01	<0.01		<0.01
7/24/2002	0.2	<0.01	<0.01	<0.01		<0.01
10/22/2002	0.03	<0.01	<0.01	<0.01		<0.01
1/20/2003	0.15	<0.01	<0.01	<0.01		<0.01
4/21/2003	0.02	<0.01	0.01	<0.01		0.01
7/29/2003	0.01	0.01	<0.01	<0.01		<0.01
10/20/2003	<0.01	<0.01	<0.01	<0.01		<0.01
1/19/2004	<0.01	<0.01	<0.01	<0.01		<0.01
4/19/2004	<0.01	<0.01	<0.01	<0.01		<0.01
7/19/2004	0.04	<0.01	<0.01	<0.01		<0.01
10/18/2004	0.04	<0.01	<0.01	<0.01		<0.01
1/19/2005	<0.01	<0.01	<0.01	<0.01		<0.01
4/18/2005	<0.01	<0.01	<0.01	<0.01		<0.01
5/23/2005	0.04					
7/18/2005	0.04	<0.01	<0.01	<0.01		<0.01
10/17/2005	<0.01	<0.01	<0.01	<0.01		<0.01
1/23/2006	0.06	<0.01	<0.01	<0.01		<0.01
4/17/2006	<0.05	<0.05	<0.05	<0.05	0.07	<0.05
7/17/2006	<0.05	<0.05	<0.05	<0.05	0.11	<0.05
10/16/2006	<0.05	0.07	0.07	0.08	0.14	0.11
1/15/2007	0.2	0.10	0.05	0.07	0.14	0.06
4/16/07	0.09	<0.05	<0.05	<0.05	<0.05	<0.05
7/16/2007	<0.05	<0.05	<0.05	<0.05	<0.05	<0.05
10/15/2007	0.06	<0.05	0.07	0.07	0.13	<0.05
1/21/2008	<0.05	<0.05	<0.05	<0.05	0.06	<0.05
4/21/2008	<0.05	<0.05	<0.05	<0.05	<0.05	<0.05

No. Observations	23	9	4	4	6	3
Minimum	0.01	0.01	0.01	0.01	0.06	0.01
Average	0.09	0.11	0.05	0.06	0.11	0.06
Maximum	0.24	0.53	0.07	0.08	0.14	0.11
90th Percentile	0.2	0.266	0.07	0.077	0.14	0.1
95th Percentile	0.227	0.398	0.07	0.0785	0.14	0.105

Censored values treated as 1/2 the MDL

No. Observations	38	37	37	37	9	37
Minimum	0.01	0.01	0.01	0.01	0.03	0.01
Average	0.06	0.03	0.02	0.01	0.08	0.01
Maximum	0.24	0.53	0.07	0.08	0.14	0.11
90th Percentile	0.17	0.04	0.05	0.03	0.14	0.03
95th Percentile	0.20	0.12	0.05	0.07	0.14	0.03

	Wells: NITRATE - NITROGEN (00620) - (mg/l)									
Date:	1A	8	11	12	13	14	15	16	18	19
2/15/2000	<0.05	0.35	0.08	<0.05	<0.05	<0.05	<0.05	0.27	<0.05	<0.05
5/9/2000	0.415	0.402	0.097	<0.02	<0.02	<0.02	<0.02	0.074	<0.02	<0.02
7/31/2001	0.93	<0.02	0.1	<0.02	<0.02	<0.02	<0.02	0.147	<0.02	<0.02
1/16/2001	1.88	<0.01		<0.01	<0.01					<0.01
2/15/2001	1.99	<0.01		0.02	0.02					<0.01
3/13/2001	2.15	0.04		0.03	0.02					0.02
4/24/2001	2.52	0.02		0.01	<0.01					<0.01
5/17/2001	2.70	0.02		0.02	0.02					0.02
6/5/2001	2.83	0.15		0.03	0.01					0.02
7/12/2001	4.47	0.07		0.03	0.03					0.03
10/8/2001	0.52	4.00		0.02	0.02					0.02
1/15/2002	1.46	<0.01		<0.01	<0.01					<0.01
4/23/2002	2.89	<0.01		<0.01	<0.01					<0.01
7/24/2002	2.77	1.12		<0.01	<0.01					<0.01
10/22/2002	0.3	<0.01		<0.01	<0.01					<0.01
1/20/2003	0.89	<0.01		<0.01	<0.01					<0.01
4/21/2003	3.34	<0.01		<0.01	<0.01					<0.01
7/29/2003	2.05	0.14		0.07	0.09					0.08
10/20/2003	0.53	0.06		0.04	0.05					0.05
1/19/2004	1.78	<0.01		<0.01	<0.01					0.01
4/19/2004	3.26	<0.01		<0.01	<0.01					<0.01
7/19/2004	4.83	0.29		0.04	0.04					<0.01
10/18/2004	2.51	1.02		0.03	<0.01					0.02
1/19/2005	2.15	0.09		0.09	0.10					0.08
4/18/2005	16.7	<0.01		<0.01	<0.01					<0.01
5/23/2005	3.02									
7/18/2005	1.72	1.72		0.21	0.16					0.17
10/17/2005	3.06	0.28		0.21	0.17					0.16
1/23/2006	2.22	0.01		<0.01	<0.01					0.02
4/17/2006	2.2	<0.2		<0.2	<0.2			0.9		<0.2
7/17/2006	2.3	<0.2		<0.2	<0.2			0.7		<0.2
10/16/2006	1.7	0.8		<0.2	<0.2			<0.2		<0.2
1/15/2007	0.9	<0.2		<0.2	<0.2			0.8		<0.2
4/16/2007	2.0	<0.2		<0.2	<0.2			0.4		0.2
7/16/2007	2.39	<0.05		<0.05	<0.05			0.57		<0.05
10/15/2007	4.48	0.13		<0.05	0.11			1.30		0.16
1/21/2008	1.45	0.18		0.15	<0.10			0.78		<0.10
4/21/2008	2.45	0.16		0.11	0.13			0.23		0.11

No. Observations	37	21	3	16	14	0	0	11	0	16
Minimum	0.3	0.01	0.08	0.01	0.01	0	0	0.074	0	0.01
Average	2.59	0.53	0.09	0.07	0.07	#DIV/0!	#DIV/0!	0.56	#DIV/0!	0.07
Maximum	16.7	4	0.1	0.21	0.17	0	0	1.3	0	0.2
90th Percentile	3.79	1.12	0.10	0.18	0.15	#NUM!	#NUM!	0.90	#NUM!	0.17
95th Percentile	4.55	1.72	0.0997	0.21	0.1635	#NUM!	#NUM!	1.1	#NUM!	0.1775

Censored values treated as 1/2 the MDL

No. Observations	38	37	3	37	37	3	3	12	3	37
Minimum	0.03	0.01	0.08	0.01	0.01	0.01	0.01	0.07	0.01	0.01
Average	2.52	0.31	0.09	0.05	0.04	0.02	0.02	0.52	0.02	0.05
Maximum	16.70	4.00	0.10	0.21	0.17	0.03	0.03	1.30	0.03	0.20
90th Percentile	3.68	0.89	0.10	0.10	0.10	0.02	0.02	0.89	0.02	0.13
95th Percentile	4.53	1.24	0.10	0.16	0.14	0.02	0.02	1.08	0.02	0.16

	Wells: PHOSPHORUS (00665) - TOTAL (mg/l)									
Date:	1A	8	11	12	13	14	15	16	18	19
02/15/00	<0.05	<0.05	0.05	0.09	<0.05	<0.05	<0.05	<0.05	0.06	<0.05
05/09/00	0.03	0.03	0.04	0.07	0.04	0.03	0.05	0.04	0.04	0.07
07/31/00	<0.02	0.03	<0.02	0.05	<0.02	0.02	<0.02	<0.02	0.03	0.02
01/16/01	<0.01	0.05		0.07	<0.01					0.02
02/15/01	<0.01	<0.01		0.04	<0.01					0.02
03/13/01	<0.01	<0.01		0.03	<0.01					<0.01
04/24/01	0.01	<0.01		0.05	<0.01					0.04
05/17/01	<0.01	<0.01		0.04	<0.01					0.02
06/05/01	<0.01	<0.01		0.05	<0.01					<0.01
07/12/01	<0.01	<0.01		0.03	<0.01					<0.01
10/08/01	<0.01	<0.01		0.05	<0.01					<0.01
01/15/02	0.01	<0.01		0.08	0.01					0.02
04/23/02	<0.01	<0.01		<0.01	<0.01					<0.01
07/24/02	<0.01	<0.01		0.01	<0.01					<0.01
10/22/02	0.06	0.05		0.08	0.03					<0.01
01/20/03	<0.01	<0.01		0.03	<0.01					<0.01
04/21/03	<0.01	<0.01		<0.01	<0.01					<0.01
07/29/03	<0.01	<0.01		<0.01	<0.01					<0.01
10/20/03	0.14	0.08		0.10	0.04					0.02
01/19/04	<0.01	<0.01		0.03	<0.01					<0.01
04/19/04	<0.01	<0.01		0.03	0.02					<0.01
07/19/04	<0.01	<0.01		0.03	<0.01					<0.01
10/18/04	<0.01	<0.01		0.01	<0.01					<0.01
01/19/05	<0.01	0.03		0.03	0.03					0.04
02/24/05	<0.01	<0.01		0.03	0.04					0.04
04/18/05	0.04	0.04		0.09	0.05					0.05
07/18/05	0.06	0.18		0.07	0.09					0.37
10/17/05	1.18	0.96		0.25	<0.01					<0.01
10/17/05	<0.01	<0.01		<0.01	<0.01					<0.01
11/04/05	0.02									
01/23/06	0.02	<0.01		0.06	0.01					0.02
04/17/06	<0.1	<0.1		<0.1	<0.1			<0.1		<0.1
07/17/06	0.2	0.3		<0.1	0.4			0.1		0.1
10/16/06	<0.1	<0.1		<0.1	<0.1			<0.1		<0.1
01/15/07	0.4	<0.1		0.4	0.3			0.3		0.7
04/16/07	<0.1	<0.1		<0.1	<0.1			<0.1		0.7
07/16/07	0.6	0.7		0.6	0.6			0.6		0.6
10/15/07	<0.1	<0.1		<0.1	<0.1			<0.1		<0.1
01/21/08	<0.1	<0.1		<0.1	<0.1			<0.1		<0.1
04/21/08	<0.1	<0.1		<0.1	<0.1			<0.1		<0.1

No. Observations	13	11	2	28	13	2	1	4	3	17
Minimum	0.01	0.03	0.04	0.01	0.01	0.02	0.05	0.04	0.03	0.02
Average	0.21	0.22	0.05	0.09	0.13	0.03	0.05	0.26	0.04	0.17
Maximum	1.18	0.96	0.05	0.6	0.6	0.03	0.05	0.6	0.06	0.7
90th Percentile	0.56	0.7	0.049	0.145	0.38	0.029	0.05	0.51	0.056	0.64
95th Percentile	0.832	0.83	0.0495	0.3475	0.48	0.0295	0.05	0.555	0.058	0.7

Censored values treated as 1/2 the MDL

No. Observations	40	39	3	39	39	3	3	12	3	39
Minimum	0.005	0.005	0.01	0.005	0.005	0.02	0.01	0.01	0.03	0.005
Average	0.08	0.08	0.03	0.07	0.05	0.03	0.03	0.11	0.04	0.08
Maximum	1.18	0.96	0.05	0.6	0.6	0.03	0.05	0.6	0.06	0.7
90th Percentile	0.146	0.1	0.048	0.092	0.058	0.029	0.045	0.28	0.056	0.154
95th Percentile	0.41	0.34	0.049	0.265	0.31	0.0295	0.0475	0.435	0.058	0.61

	Wells: SULFATE (00945) - (mg/l)									
Date:	1A	8	11	12	13	14	15	16	18	19
02/15/00	43.9	28.5	374	60.3	21.2	36.1	16.4	27.9	18.3	140
05/09/00	107.0	53.0	137.0	90.0	19.7	31.8	16.3	28.9	20.1	134
07/31/00	70.9	61.2	76.6	95.3	24.1	33.0	21.7	29.5	14.5	139
01/16/01	59	27		76	22					129
02/15/01	97	27		97	25					131
03/13/01	127	29		130	24					130
04/24/01	151	29		205	35					115
05/17/01	151	36		171	42					118
06/05/01	145	36		134	52					118
07/12/01	136	37		103	60					106
10/08/01	139	45		82	32					93
01/15/02	134	44		67	35					70
04/23/02	121	27		128	26					53
07/24/02	91	28		146	337					58
10/22/02	136	31		156	44					43
01/20/03	110	57		134	55					43
04/21/03	141	34		137	51					43
07/29/03	86	30		120	128					61
10/20/03	30	38		114	47					64
01/19/04	158	29		119	43					60
04/19/04	114	28		141	45					56
07/19/04	96	33		115	59					66
10/18/04	137	33		95	199					55
01/19/05	95	36		145	54					72
04/18/05	113	27		122	43					57
07/18/05	124	27		129	36					59
10/17/05	162	28		120	33					55
01/23/06	96	41		112	25					67
04/17/06	115	29		123	25			32		63
07/17/06	199	32		180	42			33		60
10/16/06	114	39		136	33			31		56
01/15/07	124	17		112	47			26		28
04/16/07	96	22		146	53			31		49
07/16/07	200	21		198	79			31		58
10/15/07	208	16		147	32			28		57
01/21/08	140	18		150	36			32		57
04/21/08	139	21.6		206	29.8			13.7		55.7

No. Observations	37	37	3	37	37	3	3	12	3	37
Minimum	30	16	77	60	20	32	16	14	15	28
Average	122	32	196	128	54	34	18	29	18	76
Maximum	208	61	374	206	337	36	22	33	20	140
90th Percentile	160	44	327	175	68	35	21	32	20	130
95th Percentile	199	54	350	199	142	36	21	32	20	135

	Wells: SODIUM (00929) - (mg/l)									
Date:	1A	8	11	12	13	14	15	16	18	19
02/15/00	24.6	17.2	120	27.2	10.1	38.8	28.1	13.3	20.3	61.7
05/09/00	61.3	68.2	84.2	31.1	14.2	37.2	28.5	9.8	22.2	72.3
07/31/00	31.5	17.4	35.3	31.4	22.5	28.6	35.8	19.2	20.6	61.2
01/16/01	20.2	18.4		32.3	22.8					56.9
02/15/01	22.9	18.7		31.9	22.4					58.0
03/13/01	37.9	20.4		33.9	24.4					59.0
04/24/01	51.0	19.5		38.5	25.6					51.4
05/17/01	59.3	21.6		45.5	24.7					54.1
06/05/01	59.6	18.7		52.2	26.7					54.9
07/12/01	51.8	19.3		49.1	30.8					55.5
10/08/01	64.9	26.5		33.9	28.2					51.6
01/15/02	47.0	34.4		31.6	29.8					40.9
04/23/02	56.2	13.5		37.0	25.4					35.0
07/24/02	37.3	18.9		55.3	31.4					37.0
10/22/02	43.9	31.2		60.9	37.7					34.7
01/20/03	30.8	38.4		58.1	34.0					31.0
04/21/03	62.2	33.1		56.7	33.2					32.3
07/29/03	33.2	33.7		53.0	42.8					33.8
10/20/03	16.5	17.3		41.8	34.7					33.5
01/19/04	47.4	26.8		46.5	39.9					27.4
04/19/04	39.6	18.1		47.8	27.8					32.2
07/19/04	40.5	19.8		51.7	38.7					32.5
10/18/04	57.4	23.6		43.2	33.8					26.6
01/19/05	26.2	28.6		35.3	31.8					15.3
04/18/05	39.5	33.3		41.6	35.3					27.5
07/18/05	58.1	23.6		46.5	41.2					30.0
10/17/05	72.0	51.3		46.0	63.2					29.6
01/16/06	38.8	51.4		43.6	49.5					36.0
04/17/06	40.6	24.7		42.8	44.2			19.0		32.1
07/17/06	88.6	22.7		54.7	47.9			60.3		30.8
10/16/06	42.8	20.9		55.0	40.2			35.0		27.4
01/15/07	63.9	20.2		49.9	46.1			30.5		30.1
04/16/07	31.8	19.6		37.6	33.5			25.4		24.3
07/16/07	64.7	22.0		71.1	48.4			65.9		31.5
10/15/07	109	34.7		66.5	34.6			49.2		32.3
01/21/08	74.8	41.2		64.3	40.4			23.2		34.5
04/21/08	52.2	45.2		79.7	29.6			69.3		32.9

No. Observations	37	37	3	37	37	3	3	12	3	37
Minimum	16.5	13.5	35.3	27.2	10.1	28.6	28.1	9.8	20.3	15.3
Average	48.65	27.41	79.83	46.63	33.72	34.87	30.80	35.01	21.03	39.13
Maximum	109	68.2	120	79.7	63.2	38.8	35.8	69.3	22.2	72.3
90th Percentile	67.74	42.8	112.84	62.26	46.82	38.48	34.34	65.34	21.88	58.4
95th Percentile	77.56	51.32	116.42	67.42	48.62	38.64	35.07	67.43	22.04	61.3

	Well: TOTAL DISSOLVED SOLIDS (70300) - (mg/l)									
Date:	1A	8	11	12	13	14	15	16	18	19
02/15/00	191	317	755	221	266	375	272	248	247	405
05/09/00	275	494	392	277	299	354	216	286	260	427
07/31/00	191	288	288	264	299	377	283	344	263	416
01/16/01	187	269		249	305					398
02/15/01	233	270		287	318					379
03/13/01	274	250		325	310					359
04/24/01	317	266		446	392					366
05/17/01	326	270		395	363					365
06/05/01	325	270		327	393					431
07/12/01	333	268		280	392					358
10/08/01	311	312		235	333					342
01/15/02	285	364		214	348					327
04/23/02	289	247		264	309					304
07/24/02	218	289		324	337					309
10/22/02	267	352		398	306					293
01/21/03	255	386		315	343					306
04/21/03	288	344		285	399					329
07/29/03	279	319		351	366					380
10/20/03	131	282		289	406					341
01/19/04	322	333		301	371					321
04/19/04	274	289		320	375					313
07/19/04	327	318		309	435					335
10/18/04	287	272		238	376					300
01/19/05	227	351		331	365					318
04/18/05	266	310		263	386					298
07/18/05	263	259		283	394					315
10/17/05	286	358		274	395					298
01/23/06	242	369		278	367					325
04/17/06	272	278		294	373			345		339
07/17/06	388	241		346	357			413		290
10/16/06	252	308		306	355			375		326
01/15/07	296	255		302	343			334		338
04/16/07	266	258		345	354			369		341
07/16/07	434	288		424	376			446		334
10/15/07	512	456		506	471			480		434
01/21/08	328	284		334	338			304		216
04/21/08	360	471		376	569			383		413

No. Observations	37	37	3	37	37	3	3	12	3	37
Minimum	131	241	288	214	266	354	216	248	247	216
Average	285.86	312.30	478.33	312.86	364.43	368.67	257.00	360.58	256.67	342.95
Maximum	512	494	755	506	569	377	283	480	263	434
90th Percentile	343.8	375.8	682.4	396.2	401.8	376.6	280.8	442.7	262.4	414.2
95th Percentile	397.2	459	718.7	428.4	442.2	376.8	281.9	461.3	262.7	427.8

	WellS: ALKALINITY - TOTAL (mg/l)									
Date:	1A	8	11	12	13	14	15	16	18	19
2/15/2000	121	181	135	124	184	194	97.1	169	158	160
05/09/00	69	207	101	101	189	164	91	156	145	146
07/31/00	58.6	94.5	142	104	175	198	105	171	147	144
1/16/2001	78	171		126	198					154
2/15/2001	66	151		124	200					149
03/13/01	65	135		117	206					148
4/24/2001	68	139		120	204					149
5/17/2001	74	132		114	202					151
6/5/2001	88	128		112	212					153
7/12/2001	85	131		108	201					155
10/8/2001										
1/15/2002										
4/23/2002										
7/24/2002	79	175		109	188					176
7/29/2003	78	151		108	182					193
7/19/2004	78	143		105	201					172
7/18/2005	64	134		104	183					172
4/17/2006								158		
7/17/2006	79	112		111	186			173		158
7/16/2007	95	147		105	168			192		160
10/15/2007	90	134		124	180			114		169

No. Observations	17	17	3	17	17	3	3	7	3	17
Minimum	58.6	94.5	101	101	168	164	91	114	145	144
Average	78.56	145.03	126.00	112.71	191.71	185.33	97.70	161.86	150.00	159.35
Maximum	121	207	142	126	212	198	105	192	158	193
90th Percentile	92	177.4	140.6	124	204.8	197.2	103.42	180.6	155.8	173.6
95th Percentile	100.2	186.2	141.3	124.4	207.2	197.6	104.21	186.3	156.9	179.4

	Wells: Bicarbonate (mg/l)					
Date:	**1A**	**8**	**12**	**13**	**16**	**19**
7/16/2007	95	147	105	168	192	160
10/15/2007	90	134	123	180	114	169

No. Observations	2	2	2	2	2	2
Minimum	90	134	105	168	114	160
Average	93	141	114	174	153	165
Maximum	95	147	123	180	192	169
90th Percentile	94.5	145.7	121.2	178.8	184.2	168.1
95th Percentile	94.75	146.35	122.1	179.4	188.1	168.55

	Wells: CALCIUM (ug/l)					
Date:	1A	8	12	13	16	19
01/16/01	28600	53800	36900	58500		53200
02/15/01	35600	52200	42600	62600		49800
03/13/01	32900	45100	47400	60400		47600
04/24/01	32400	46700	66000	68100		49900
05/17/01	32800	46100	53600	70800		50500
06/05/01	30800	43700	39700	71800		49200
07/12/01	35100	45500	31000	69800		46800
07/24/02	27800	60100	39900	64400		54500
07/29/03	28200	54200	33400	63500		60500
07/19/04	32300	51000	32000	68800		55200
07/18/05	23600	50100	41500	69900		61500
04/17/06					68300	
07/17/06	33900	51300	51800	70600	84600	64400
07/16/07	47600	54000	50200	59600	66900	58400
10/15/07	26000	51500	33400	55200	54100	54200

No. Observations	14	14	14	14	4	14
Minimum	23600	43700	31000	55200	54100	46800
Average	31971	50379	42814	65286	68475	53979
Maximum	47600	60100	66000	71800	84600	64400
90th Percentile	#NUM!	54140	53060	70740	79710	61200
95th Percentile	39800	56265	57940	71150	82155	62515

	Well: Iron (ug/l)					
Date:	1A	8	12	13	16	19
08/01/00	<20	86.9	287	4370		
01/16/01	<10	230	260	4530		1470
02/15/01	<10	70	290	4950		1400
03/13/01	<10	60	330	5060		1350
04/11/01			490			
04/24/01	<10	110	470	6570		1470
04/14/98	<10	90	370	6720		1380
08/12/98	<10	150	290	6830		1370
10/20/98	<10	90	220	6890		1330
07/24/02	<10	110	280	5790		1530
07/29/03	<10	90	260	5480		1730
7/19/2004	<10	90	260	4900		1710
7/18/2005	<10	140	350	5580		2270
11/1/2005						
11/4/2005						
11/9/2005						
11/16/2005						
11/17/2005						
11/22/2005						
11/23/2005						
11/30/2005						
4/17/2006					<5	
7/17/2006	<5	127	442	5060	9	2250
07/16/07	<5	256	466	3960	9	1970
10/15/07	<5	1200	298	3530	6	1870

No. Observations	0	15	16	15	3	14
Minimum	0.0000	60.0000	220.0000	3530.0000	6.0000	1330.0000
Average	#DIV/0!	193.3267	335.1875	5348.0000	8.0000	1650.0000
Maximum	0.0000	1200.0000	490.0000	6890.0000	9.0000	2270.0000
90th Percentile	#NUM!	245.6	468	6786	9	2166
95th Percentile	#NUM!	539.2	475	6848	9	2257

Censored values treated as 1/2 the MDL

No. Observations	15	15	16	15	4	14
Minimum	2.5000	60.0000	220.0000	3530.0000	2.5000	1330.0000
Average	4.8333	193.3267	335.1875	5348.0000	6.6250	1650.0000
Maximum	10.0000	1200.0000	490.0000	6890.0000	9.0000	2270.0000
90th Percentile	5	245.6	468	6786	9	2166
95th Percentile	6.5	539.2	475	6848	9	2257

	Wells: Magnesium mg/L									
Date:	1A	8	11	12	13	14	15	16	18	19
2/15/2000	11.6	18.5	26.0	12.1	16.2	18.3	9.01	16.4	13.9	16.3
5/9/2000	7.1	19.8	11.1	13.2	16.2	17.9	9.5	20.0	13.6	16.8
7/31/2000	7.5	12.6	16.1	12.4	15.8	18.9	11.4	21.6	13.1	15.7
8/1/2000	7.65	12.9		13.2	17.4					
1/16/2001	9.8	15.1		12.2	16.9					14.8
2/15/2001	11.8	14.6		14.2	18.4					13.8
3/13/2001	11.0	12.8		15.7	18.0					13.2
4/24/2001	11.3	14.1		22.5	21.4					14.3
5/17/2001	11.0	13.2		17.5	21.2					13.8
6/5/2001	10.4	12.9		12.9	20.7					13.4
7/12/2001	12.5	13.9		10.0	19.8					12.7
7/24/2002	10.2	15.7		12.6	17.8					15.1
7/29/2003	9.9	15.9		10.7	18.1					16.6
7/19/2004	12.6	14.3		9.8	19.5					15.9
7/18/2005	8.9	14.6		13.4	20.9					17.8
4/17/2006								20.2		
7/17/2006	12.3	15.5		16.6	20.4			25.1		18.1
7/16/2007	15.5	14.6		15.9	15.4			18.6		15.3
10/15/2007	9.09	14.4		10.9	15.1			17.0		15.0

No. Observations	18	18	3	18	18	3	3	7	3	17
Minimum	7.1	12.6	11.1	9.8	15.1	17.9	9.01	16.4	13.1	12.7
Average	10.56	14.74	17.73	13.66	18.29	18.37	9.97	19.84	13.53	15.21
Maximum	15.5	19.8	26	22.5	21.4	18.9	11.4	25.1	13.9	18.1
90th Percentile	12.53	16.68	24.02	16.87	20.99	18.78	11.02	23	13.84	17.2
95th Percentile	13.035	18.695	25.01	18.25	21.23	18.84	11.21	24.05	13.87	17.86

	Wells: Dissolved Oxygen (mg/l)									
Date:	**1A**	**8**	**11**	**12**	**13**	**14**	**15**	**16**	**18**	**19**
7/17/06	5.7	0.4		0.5	0.5			0.7		0.6
10/16/06	1.0	0.2		0.5	0.8			0.5		0.5
7/16/07	3.9	0.6		0.4	0.6			0.7		0.9

No. Observations	3.0	3.0	0.0	3.0	3.0	0.0	0.0	3.0	0.0	3.0
Minimum	1.0	0.2	0.0	0.4	0.5	0.0	0.0	0.5	0.0	0.5
Average	3.5	0.4	#DIV/0!	0.5	0.7	#DIV/0!	#DIV/0!	0.6	#DIV/0!	0.7
Maximum	5.7	0.6	0.0	0.5	0.8	0.0	0.0	0.7	0.0	0.9
90th Percentile	5.3	0.6	#NUM!	0.5	0.8	#NUM!	#NUM!	0.7	#NUM!	0.8
95th Percentile	5.5	0.6	#NUM!	0.5	0.8	#NUM!	#NUM!	0.7	#NUM!	0.9

	Wells: Potassium (mg/l)					
Date:	**1A**	**8**	**12**	**13**	**16**	**19**
08/01/00	0.7	2.9	1.3	1.9		
01/16/01	1.3	2.8	1.2	1.8		1.4
02/15/01	1.6	3.7	1.3	2.3		1.6
03/13/01	1.5	3.1	1.3	2.3		1.5
04/24/01	1.4	3.0	1.4	2.5		1.6
05/17/01	1.5	3.4	1.4	2.6		1.6
06/05/01	1.3	3.4	1.3	2.7		1.6
07/12/01	1.2	3.0	1.1	2.5		1.5
07/24/02	1.2	3.7	1.1	2.3		1.6
07/29/03	1.5	3.3	1.0	2.4		1.7
07/19/04	0.7	2.3	0.9	2.4		1.7
07/18/05	1.1	4.7	1.2	3.0		2.0
04/17/06					1.9	
07/17/06	2.12	3.47	2.5	3.7	3.53	2.48
07/16/07	1.57	3.88	2.04	2.13	2.25	1.77
10/15/07	1.58	4.82	1.71	1.96	1.93	1.77

No. Observations	15	15	15	15	4	14
Minimum	0.70	2.30	0.90	1.80	1.90	1.40
Average	1.35	3.43	1.38	2.43	2.40	1.70
Maximum	2.12	4.82	2.50	3.70	3.53	2.48
90th Percentile	1.59	4.37	1.91	2.88	3.15	1.93
95th Percentile	1.76	4.74	2.18	3.21	3.34	2.17

	Wells: TOC mg/l					
Date:	**1A**	**8**	**12**	**13**	**16**	**19**
08/01/00	0.824		1.22	5.25		3.05
01/16/01	11	7	2	27		3
02/15/01	15.0	27.6	21.6	42.5		30.9
03/13/01	18	38	28	54		37
04/24/01	10	26	15	43		28
05/17/01	3	28	20	46		27
06/05/01	2	8	3	5		4
07/12/01	3	7	4	5		5
07/24/02	3	7	2	10		6
07/29/03	2.0	6	2	5		4
07/19/04	1	7	2	4		4
07/18/05	3	9	3	8		6
04/17/06					1	
07/17/06	1	6	<1	4	1	3
07/16/07	1.22	7.71	1.45	4.35	1.85	3.81
10/15/07	1.01	9.06	1.35	5.38	1.95	3.39

No. Observations	15	14	14	15	4	15
Minimum	0.82	6.00	1.22	4.00	1.00	3.00
Average	5.00	13.81	7.62	17.90	1.45	11.21
Maximum	18.00	38.00	28.00	54.00	1.95	37.00
90th Percentile	13.40	27.88	21.12	44.80	1.92	29.74
95th Percentile	15.90	31.50	23.84	48.40	1.94	32.73

	Wells: Phenol (ug/l)					
Date:	**1A**	**8**	**12**	**13**	**16**	**19**
09/14/00	<5		<5	<5		<5
01/16/01	<1	<1	<1	<1		<1
02/15/01	<1	1	<1	<1		<1
03/13/01	<1	<1	<1	<1		1
04/24/01	<1	<1	1	<1		<1
05/17/01	<1	<1	<1	<1		<1
06/05/01	<1	<1	<1	<1		<1
07/12/01	<1	<1	<1	<1		<1
07/24/02	1.00	<1	<1	<1		<1
07/29/03	<1	<1	<1	<1		<1
07/19/04	<1	<1	<1	<1		<1
07/18/05	<1	<1	<1	<1		<1
07/17/05	<10	<10	<10	<10	<10	<10
07/16/07	<6	<6	<6	<6	<6	<6

No. Observations	1.00	1.00	1.00	0.00	0.00	1.00
Minimum	1.00	1.00	1.00	0.00	0.00	1.00
Average	1.00	1.00	1.00	#DIV/0!	#DIV/0!	1.00
Maximum	1.00	1.00	1.00	0.00	0.00	1.00
90th Percentile	1.00	1.00	1.00	#NUM!	#NUM!	1.00
95th Percentile	1.00	1.00	1.00	#NUM!	#NUM!	1.00

Censored values treated as 1/2 the MDL

No. Observations	14.00	13.00	14.00	14.00	2.00	14.00
Minimum	0.50	0.50	0.50	0.50	0.50	0.50
Average	0.86	0.73	0.86	0.82	1.75	0.86
Maximum	3.00	3.00	3.00	3.00	3.00	3.00
90th Percentile	2.05	0.90	2.05	1.90	2.75	2.05
95th Percentile	2.68	1.80	2.68	2.68	2.88	2.68

	Wells: ETA (ug/l)					
Date:	1A	8	12	13	16	19
1/24/2001	<1000	<1000	<1000	<1000		<1000
2/15/2001	<1000	<1000	<1000	<1000		<1000
3/13/2001	<1000	<1000	<1000	<1000		<1000
4/24/2001	<1000	<1000	<1000	<1000		<1000
5/17/2001	<1000	<1000	<1000	<1000		<1000
6/5/2001	<1000	<1000	<1000	<1000		<1000
7/12/2001	<1000	<1000	<1000	<1000		<1000
10/8/2001	<700	<700	<700	<700		<700
1/15/2002	<700	<700	<700	<700		<700
4/23/2002	<700	<700	<700	<700		<700
7/24/2002	<700	<700	<700	<700		<700
10/22/2002	<700	<700	<700	<700		<700
1/20/2003	<700	<700	<700	<700		<700
4/21/2003	<700	<700	<700	1700		<700
4/30/2003				1800		
5/6/2003				1300		
5/12/2003				1500		
5/20/2003				1050		
7/29/2003	<700	<700	<700	<700		<700
10/20/2003	<700	<700	<700	<700		<700
1/19/2004	<700	<700	<700			822
1/22/2004				<700		<700
4/19/2004	<700	<700	<700	<700		<700
7/19/2004	<700	<700	<700	<700		<700
10/18/2004	<700	<700	<700	<700		<700
1/19/2005	<700	<700	<700	<700		<700
4/18/2005	<700	<700	<700	<700		<700
7/18/2005	<700	<700	<700	<700		<700
10/17/2005	<700	<700	<700	<700		<700
1/16/2006	<700	<700	<700	<700		<700
1/23/2006	<700					
4/17/2006	<700	<700	<700	<700	<700	<700
7/17/2006	<700	<700	<700	<700	<700	<700
7/16/2007	<700	<700	<700	<700	<700	<700

No. Observations	0	0	0	5	0	1
Minimum	0.00	0.00	0.00	1050.00	0.00	822.00
Average	#DIV/0!	#DIV/0!	#DIV/0!	1470.00	#DIV/0!	822.00
Maximum	0.00	0.00	0.00	1800.00	0.00	822.00
90th Percentile	#NUM!	#NUM!	#NUM!	1760.00	#NUM!	822.00
95th Percentile	#NUM!	#NUM!	#NUM!	1780.00	#NUM!	822.00

Censored values treated as 1/2 the MDL

No. Observations	29	28	28	32	3	29
Minimum	350.00	350.00	350.00	350.00	350.00	350.00
Average	386.21	387.50	387.50	557.81	350.00	402.48
Maximum	500.00	500.00	500.00	1800.00	350.00	822.00
90th Percentile	500.00	500.00	500.00	1275.00	350.00	500.00
95th Percentile	500.00	500.00	500.00	1590.00	350.00	500.00

	Wells: Dissolved Aluminum (mg/l)									
Date:	1A	8	11	12C	13	14	15	16	18	19
2/15/2000	<0.05	<0.05	<0.05	<0.05	<0.05	0.065	0.140	<0.05	<0.05	<0.05
5/9/2000	<0.05	<0.05	<0.05	<0.05	<0.05	<0.05	<0.05	<0.05	<0.05	<0.05
7/31/2000	<0.05	<0.05	<0.05	<0.05	<0.05	<0.05	0.060	<0.05	<0.05	<0.05
1/16/2001	<0.05	<0.05		<0.05	<0.05					<0.05
2/15/2001	<0.05	<0.05		<0.05	<0.05					<0.05
3/13/2001	<0.05	<0.05		<0.05	<0.05					<0.05
4/24/2001	<0.05	<0.05		<0.05	<0.05					<0.05
5/17/2001	<0.05	<0.05		<0.05	<0.05					<0.05
6/5/2001	<0.05	<0.05		<0.05	<0.05					<0.05
7/12/2001	<0.05	<0.05		<0.05	<0.05					<0.05
7/24/2002	<0.05	<0.05		<0.05	<0.05					<0.05
7/29/2003	<0.05	<0.05		<0.05	<0.05					<0.05
7/19/2004	<0.05	<0.05		<0.05	<0.05					<0.05
7/18/2005	<0.05	<0.05		<0.05	<0.05					<0.05
4/17/2006								<0.05		
7/17/2006	<0.05	<0.05		<0.05	<0.05			<0.05		<0.05
7/16/2007	<0.05	<0.05		<0.05	<0.05			<0.05		<0.05
10/15/2007	<0.05	<0.05		<0.05	<0.05			<0.05		<0.05

No. Observations	0.00	0.00	0.00	0.00	0.00	1.00	2.00	0.00	0.00	0.00
Minimum	0.00	0.00	0.00	0.00	0.00	0.07	0.06	0.00	0.00	0.00
Average	#DIV/0!	#DIV/0!	#DIV/0!	#DIV/0!	#DIV/0!	0.07	0.10	#DIV/0!	#DIV/0!	#DIV/0!
Maximum	0.00	0.00	0.00	0.00	0.00	0.07	0.14	0.00	0.00	0.00
90th Percentile	#NUM!	#NUM!	#NUM!	#NUM!	#NUM!	0.07	0.13	#NUM!	#NUM!	#NUM!
95th Percentile	#NUM!	#NUM!	#NUM!	#NUM!	#NUM!	0.07	0.14	#NUM!	#NUM!	#NUM!

Censored values treated as 1/2 the MDL

No. Observations	17.00	17.00	3.00	17.00	17.00	3.00	3.00	7.00	3.00	17.00
Minimum	0.03	0.03	0.03	0.03	0.03	0.03	0.03	0.03	0.03	0.03
Average	0.03	0.03	0.03	0.03	0.03	0.04	0.08	0.03	0.03	0.03
Maximum	0.03	0.03	0.03	0.03	0.03	0.07	0.14	0.03	0.03	0.03
90th Percentile	0.03	0.03	0.03	0.03	0.03	0.06	0.12	0.03	0.03	0.03
95th Percentile	0.03	0.03	0.03	0.03	0.03	0.06	0.13	0.03	0.03	0.03

	Wells: Dissolved Barium uG/l					
Date:	**1A**	**8**	**12**	**13**	**16**	**19**
08/01/00	8.94	19.90	18.10	35.10		
01/16/01	11.0	23	15	33		23
02/15/01	16	34	17	36		23
03/13/01	14	29	20	35		21
04/24/01	20	28	27	45		21
05/17/01	15	22	22	44		21
06/05/01	20	29	22	46		24
07/12/01	16	28	13	46		21
07/24/02	10	16	15	37		19
07/29/03	16.0	25	15	40		26
7/19/2004	17	21	15	37		23
7/18/2005	12	24	17	37		24
4/17/2006					21.2	
7/17/2006	19.1	15	27.3	35.8	28.6	25.2
7/16/2007	24.0	29.4	29.5	31.7	25.0	23.9
10/15/2006	16	28	18	24	17	18

No. Observations	15	15	15	15	4	14
Minimum	8.94	15.00	13.00	24.00	17.00	18.00
Average	15.67	24.75	19.39	37.51	22.95	22.36
Maximum	24.00	34.00	29.50	46.00	28.60	26.00
90th Percentile	20.00	29.24	27.18	45.60	27.52	24.84
95th Percentile	21.20	30.78	27.96	46.00	28.06	25.48

	Wells: BORON (01022) (ug/l)									
Date:	**1A**	**8**	**11**	**12**	**13**	**14**	**15**	**16**	**18**	**19**
2/15/2000	96	68	89	149	<50	67	<50	<50	<50	141
5/9/2000	688	25	364	142	33	42	21	<20	24	126
7/31/2000	124	40	254	131	63	62	37	28	33	137
1/16/2001	110	310		200	90					200
2/15/2001	170	60		80	70					150
3/13/2001	130	70		80	80					140
4/24/2001	90	40		80	70					140
5/17/2001	90	50		100	80					150
6/5/2001	60	30		100	60					130
7/12/2001	50	40		210	70					140
7/24/2002	50	30		90	40					80
7/29/2003	40	50		70	90					110
7/19/2004	<40	50		70	70					100
7/18/2005	50	50		100	60					80
4/17/2006								18		
7/17/2006	52	68		69	123			36		88
7/16/2007	220	172		128	133			75		108
10/15/2007	54	77		71	71			39		75

No. Observations	16	17	3	17	16	3	2	5	2	17
Minimum	40.0	25.0	89.0	69.0	33.0	42.0	21.0	18.0	24.0	75.0
Average	129.6	72.4	235.7	110.0	75.2	57.0	29.0	39.2	28.5	123.2
Maximum	688.0	310.0	364.0	210.0	133.0	67.0	37.0	75.0	33.0	200.0
90th Percentile	195.0	115.0	342.0	169.4	106.5	66.0	35.4	60.6	32.1	150.0
95th Percentile	337.0	199.6	353.0	202.0	125.5	66.5	36.2	67.8	32.6	160.0

Censored values treated as 1/2 the MDL

No. Observations	17	17	3	17	17	3	3	7	3	17
Minimum	20.0	25.0	89.0	69.0	25.0	42.0	21.0	10.0	24.0	75.0
Average	123.2	72.4	235.7	110.0	72.2	57.0	27.7	33.0	27.3	123.2
Maximum	688.0	310.0	364.0	210.0	133.0	67.0	37.0	75.0	33.0	200.0
90th Percentile	190.0	115.0	342.0	169.4	103.2	66.0	34.6	53.4	31.4	150.0
95th Percentile	313.6	199.6	353.0	202.0	125.0	66.5	35.8	64.2	32.2	160.0

	Wells: CADMIUM (01027) (ug/l)									
Date:	**1A**	**8**	**11**	**12**	**13**	**14**	**15**	**16**	**18**	**19**
07/24/02	<0.5	<0.5		<0.5	<0.5					<0.5
07/29/03	<0.5	<0.5		<0.5	<0.5					<0.5
07/19/04	<0.5	<0.5		<0.5	<0.5					<0.5
07/18/05	<0.5	<0.5		<0.5	<0.5					<0.5
04/17/06								<1		
07/17/06	<1	<1		<1	<1			<1		<1
07/16/07	<1	<1		<1	<1			<1		<1
10/15/07	<1	<1		<1	<1			<1		<1

No. Observations	0	0	0	0	0	0	0	0	0	0
Minimum	0.0	0.0	0.0	0.0	0.0	0.0	0.0	0.0	0.0	0.0
Average	#DIV/0!	#DIV/0!	#DIV/0!	#DIV/0!	#DIV/0!	#DIV/0!	#DIV/0!	#DIV/0!	#DIV/0!	#DIV/0!
Maximum	0.0	0.0	0.0	0.0	0.0	0.0	0.0	0.0	0.0	0.0
90th Percentile	#NUM!	#NUM!	#NUM!	#NUM!	#NUM!	#NUM!	#NUM!	#NUM!	#NUM!	#NUM!
95th Percentile	#NUM!	#NUM!	#NUM!	#NUM!	#NUM!	#NUM!	#NUM!	#NUM!	#NUM!	#NUM!

Censored values treated as 1/2 the MDL

No. Observations	7	7		7	7			4		7
Minimum	0.3	0.3		0.3	0.3			0.5		0.3
Average	0.4	0.4		0.4	0.4			0.5		0.4
Maximum	0.5	0.5		0.5	0.5			0.5		0.5
90th Percentile	0.5	0.5		0.5	0.5			0.5		0.5
95th Percentile	0.5	0.5		0.5	0.5			0.5		0.5

	Wells: CHROMIUM (01034) (ug/l)									
Date:	1A	8	11	12	13	14	15	16	18	19
2/15/2000	<5	<5	<5	<5	<5	<5	<5	<5	<5	<5
5/9/2000	<1	<1	<1	<1	<1	1	2	<1	1	<1
	<1	<1	<1	<1	1	<1	<1	<1	<1	<1
1/16/2001	<2	<2		<2	<2					<2
2/15/2001	<2	<2		<2	<2					<2
3/13/2001	<2	<2		<2	<2					<2
4/24/2001	<2	<2		<2	<2					<2
5/17/2001	<2	<2		<2	<2					<2
6/5/2001	<2	<2		<2	<2					<2
7/12/2001	<2	<2		<2	<2					<2
7/24/2002	<2	<2		<2	<2					<2
7/29/2003	<2	<2		<2	<2					<2
7/19/2004	<2	<2		<2	<2					<2
7/18/2005	<2	<2		<2	<2					<2
4/17/2006								0.5		
7/17/2006	0.8	0.6		0.6	1.2			0.7		<0.5
7/16/2007	<1	<1		<1	<1			<1		<1
10/15/2007	<1	<1		<1	<1			<1		<1

No. Observations	1	1	0	1	2	1	1	2	1	0
Minimum	0.80	0.60	0.00	0.60	1.00	1.00	2.00	0.50	1.00	0.00
Average	0.80	0.60	#DIV/0!	0.60	1.10	1.00	2.00	0.60	1.00	#DIV/0!
Maximum	0.80	0.60	0.00	0.60	1.20	1.00	2.00	0.70	1.00	0.00
90th Percentile	0.80	0.60	#NUM!	0.60	1.18	1.00	2.00	0.68	1.00	#NUM!
95th Percentile	0.80	0.60	#NUM!	0.60	1.19	1.00	2.00	0.69	1.00	#NUM!

Censored values treated as 1/2 the MDL

No. Observations	17	17	3	17	17	3	3	7	3	17
Minimum	0.50	0.50	0.50	0.50	0.50	0.50	0.50	0.50	0.50	0.25
Average	0.96	0.95	1.17	0.95	1.01	1.33	1.67	0.81	1.33	0.93
Maximum	2.50	2.50	2.50	2.50	2.50	2.50	2.50	2.50	2.50	2.50
90th Percentile	1.00	1.00	2.10	1.00	1.08	2.20	2.40	1.42	2.20	1.00
95th Percentile	1.30	1.30	2.30	1.30	1.46	2.35	2.45	1.96	2.35	1.30

	Wells: COPPER (01042) (ug/l)									
Date:	**1A**	**8**	**11**	**12**	**13**	**14**	**15**	**16**	**18**	**19**
2/15/2000	<5	<5	<5	<5	<5	<5	<5	<5	<5	<5
5/9/2000	<2	<2	<2	<2	<2	<2	<2	<2	<2	<2
7/31/2000	2	<2	<2	<2	<2	<2	<2	<2	<2	<2
1/16/2001	<1	2		<1	<1					<1
2/15/2001	<1	2		<1	<1					<1
3/13/2001	<1	1		<1	<1					<1
4/24/2001	<1	<1		<1	<1					<1
5/17/2001	1	2		<1	<1					<1
6/5/2001	<1	<1		<1	<1					<1
7/12/2001	1	1		<1	<1					<1
7/24/2002	<1	1		<1	<1					<1
7/29/2003	<1	<1		<1	<1					<1
7/19/2004	<1	1		<1	<1					<1
7/18/2005	<1	<1		<1	<1					<1
4/17/2006								0.5		
7/17/2006	0.9	2		0.2	<0.2			0.4		<0.2
7/16/2007	1.0	0.9		0.5	0.6			0.7		0.2
10/15/2007	0.9	0.6		0.5	0.5			0.6		0.4

No. Observations	6	10	0	3	2	0	0	4	0	2
Minimum	0.90	0.60	0.00	0.20	0.50	0.00	0.00	0.40	0.00	0.20
Average	1.13	1.35	#DIV/0!	0.40	0.55	#DIV/0!	#DIV/0!	0.55	#DIV/0!	0.30
Maximum	2.00	2.00	0.00	0.50	0.60	0.00	0.00	0.70	0.00	0.40
90th Percentile	1.50	2.00	#NUM!	0.50	0.59	#NUM!	#NUM!	0.67	#NUM!	0.38
95th Percentile	1.75	2.00	#NUM!	0.50	0.60	#NUM!	#NUM!	0.69	#NUM!	0.39

Censored values treated as 1/2 the MDL

No. Observations	17	17	3	17	17	3	3	7	3	17
Minimum	0.50	0.50	1.00	0.20	0.10	1.00	1.00	0.40	1.00	0.10
Average	0.87	1.18	1.50	0.66	0.66	1.50	1.50	0.96	1.50	0.63
Maximum	2.50	2.50	2.50	2.50	2.50	2.50	2.50	2.50	2.50	2.50
90th Percentile	1.40	2.00	2.20	1.00	1.00	2.20	2.20	1.60	2.20	1.00
95th Percentile	2.10	2.10	2.35	1.30	1.30	2.35	2.35	2.05	2.35	1.30

	Wells: Lead (ug/l)					
Date	**1A**	**8**	**12**	**13**	**16**	**19**
08/01/00	1.9	<1.83	<1.83	<1.83		
01/16/01	<2	7	2	<2		3
02/15/01	1	9	<1	<1		<1
03/13/01	4	4	<1	1		1
04/24/01	2	1	1	1		2
05/17/01	<1	<1	<1	<1		2
06/05/01	2	2	1	2		2
07/12/01	<1	<1	2	<1		<1
07/24/02	3	2	2	1		<1
07/29/03	<1	2	1	<1		<1
7/19/2004	<1	<1	<1	<1		<1
7/18/2005	<1	<1	<1	<1		<1
4/17/2006					<0.1	
7/17/2006	0.1	0.1	<0.1	<0.1	<0.1	<0.1
7/16/2007	<0.05	0.09	<0.05	0.07	<0.05	<0.05
10/15/2007	<0.05	0.23	<0.05	<0.05	<0.05	<0.05

No. Observations	7	10	6	5	0	5
Minimum	0.1	0.1	1.0	0.1	0.0	1.0
Average	2.0	2.7	1.5	1.0	#DIV/0!	2.0
Maximum	4.0	9.0	2.0	2.0	0.0	3.0
90th Percentile	3.4	7.2	2.0	1.6	#NUM!	2.6
95th Percentile	3.7	8.1	2.0	1.8	#NUM!	2.8

Censored values treated as 1/2 the MDL

No. Observations	15	14	14	14	4	14
Minimum	0.0	0.1	0.0	0.0	0.0	0.0
Average	1.2	2.1	0.8	0.7	0.0	0.9
Maximum	4.0	9.0	2.0	2.0	0.1	3.0
90th Percentile	2.6	6.1	2.0	1.0	0.1	2.0
95th Percentile	3.3	7.7	2.0	1.4	0.1	2.4

	Wells: Manganese (ug/l)					
Date:	**1A**	**8**	**12**	**13**	**16**	**19**
08/01/00	<5	58.8	97	144		
01/16/01	<5	70	90	160		60
02/15/01	<5	44	103	176		59
03/13/01	<5	51	115	178		57
04/24/01	<5	59	161	227		59
05/17/01	<5	68	127	239		59
06/05/01	<5	60	99	247		59
07/12/01	<5	64	75	239		54
07/24/02	<5	60	96	153		69
07/29/03	10	51	83	136		74
7/19/2004	<10	50	80	120		70
7/18/2005	<10	50	100	120		80
4/17/2006					<0.2	
7/17/2006	0.5	55	127	128	6.6	81.9
7/16/2007	<0.2	64.3	126.0	97.0	17.0	68.5
10/16/2007	2.3	65.3	88.2	91.2	4.7	71.2

No. Observations	3	15	15	15	3	14
Minimum	0.50	44.00	75.00	91.20	4.70	54.00
Average	4.27	58.03	104.51	163.68	9.43	65.83
Maximum	10.00	70.00	161.00	247.00	17.00	81.90
90th Percentile	8.46	66.92	127.00	239.00	14.92	78.20
95th Percentile	9.23	68.60	137.20	241.40	15.96	80.67

Censored values treated as 1/2 the MDL

No. Observations	15	15	15	15	4	14
Minimum	0.10	44.00	75.00	91.20	0.10	54.00
Average	3.03	58.03	104.51	163.68	7.10	65.83
Maximum	10.00	70.00	161.00	247.00	17.00	81.90
90th Percentile	5.00	66.92	127.00	239.00	13.88	78.20
95th Percentile	6.50	68.60	137.20	241.40	15.44	80.67

	Wells: Mercury ug/l					
Date:	1A	8	12	13	16	19
08/01/00	0.0712	0.0694	0.0628	0.0899		
01/16/01	<0.0005	0.0009	<0.0005	<0.0005		<0.0005
02/15/01	<0.0005			<0.0005		
02/28/01		0.0020	<0.0005			<0.0005
03/13/01	0.0005	0.0024	<0.0005	0.0005		<0.0005
04/24/01	<0.0005	0.0018	<0.0005	<0.0005		<0.0005
05/17/01	<0.0005	0.0018	<0.0005	<0.0005		<0.0005
06/05/01	<0.0005	0.0016	<0.0005	<0.0005		<0.0005
07/12/01	<0.0005	0.0017	<0.0005	<0.0005		<0.0005
07/24/02	0.0081	0.0072	0.0036	0.0021		0.0026
08/23/02	0.0015	0.0025	0.0006	0.00089		0.0007
07/29/03	<0.0005	0.0035	<0.0005	0.00067		<0.0005
7/20/2004	<0.0005	0.0013	<0.0005	0.0012		0.0011
7/19/2005	<0.0005	0.0018	<0.0005	<0.0005		<0.0005
4/14/2006					<0.005	
7/17/2006	0.0008	0.0016	<0.0005	<0.0005	0.007	<0.005
7/16/2007	<0.0005	0.0008	0.0011	0.0011	0.0019	0.0012
10/15/2007			<0.0005	<0.0005	<0.0005	

No. Observations	5	15	4	7	2	4
Minimum	0.0005	0.0008	0.0006	0.0005	0.0019	0.0007
Average	0.0164	0.0067	0.0170	0.0138	0.0045	0.0014
Maximum	0.0712	0.0694	0.0628	0.0899	0.0070	0.0026
90th Percentile	0.0460	0.0057	0.0450	0.0372	0.0065	0.0022
95th Percentile	0.0586	0.0259	0.0539	0.0636	0.0067	0.0024

Censored values treated as 1/2 the MDL

No. Observations	15	15	16	16	4	14
Minimum	0.0003	0.0008	0.0003	0.0003	0.0003	0.0003
Average	0.0056	0.0067	0.0044	0.0062	0.0029	0.0007
Maximum	0.0712	0.0694	0.0628	0.0899	0.0070	0.0026
90th Percentile	0.0055	0.0057	0.0024	0.0017	0.0057	0.0021
95th Percentile	0.0270	0.0259	0.0184	0.0241	0.0063	0.0025

	Wells: Nickel (ug/l)					
Date:	1A	8	12	13	16	19
08/01/00	<3	<3	<3	<3		
01/16/01	<3	<3	<3	<3		<3
02/15/01	<2	<2	<2	<2		<2
03/13/01	<2	<2	<2	<2		<2
04/24/01	<2	2	<2	<2		<2
05/17/01	<2	<2	<2	<2		<2
06/05/01	<2	<2	<2	<2		<2
07/12/01	<2	<2	<2	<2		<2
07/24/02	<2	<2	<2	<2		<2
07/29/03	<2	<2	<2	<2		<2
07/19/04	<2	<2	<2	<2		<2
7/18/2005	<2	<2	<2	<2		<2
4/17/2006					0.9	
7/17/2006	<0.2	1.1	<0.2	<0.2	0.3	<0.2
7/16/2007	<0.2	0.9	<0.2	<0.2	0.4	<0.2
10/15/2007	0.3	1.3	0.2	0.2	0.9	0.3

No. Observations	1	4	1	1	4	1
Minimum	0.30	0.90	0.20	0.20	0.30	0.30
Average	0.30	1.33	0.20	0.20	0.63	0.30
Maximum	0.30	2.00	0.20	0.20	0.90	0.30
90th Percentile	0.30	1.79	0.20	0.20	0.90	0.30
95th Percentile	0.30	1.90	0.20	0.20	0.90	0.30

Censored values treated as 1/2 the MDL

No. Observations	15	15	15	15	4	14
Minimum	0.10	0.90	0.10	0.10	0.30	0.10
Average	0.90	1.15	0.89	0.89	0.63	0.86
Maximum	1.50	2.00	1.50	1.50	0.90	1.50
90th Percentile	1.30	1.50	1.30	1.30	0.90	1.00
95th Percentile	1.50	1.65	1.50	1.50	0.90	1.18

	Wells: Selenium (ug/l)					
Date:	**1A**	**8**	**12**	**13**	**16**	**19**
08/01/00	<2	<2	<2	<2		
01/16/01	<1	<1	<1	<1		<1
02/15/01	<1	<1	<1	<1		<1
03/13/01	<1	<1	<1	<1		<1
04/24/01	<1.0	<1.0	<1.0	<1.0		<1.0
05/17/01	<1.0	<1.0	<1.0	<1.0		<1.0
06/05/01	<1.0	<1.0	<1.0	<1.0		<1.0
07/12/01	<1.0	<1.0	<1.0	<1.0		<1.0
07/24/02	4	7	2	3		<1
08/23/02		<1.0				
07/29/03	<1	2	<1	<1		<1
07/19/04	<5	<5	<5	<5		<5
7/18/2005	<1	<1	<1	<1		<1
4/17/2006					<1	
7/17/2006	<1	<1	<1	<1	<1	<1
7/16/2007	<1	<1	<1	<1	<1	<1
10/15/2007	<0.5	0.5	<0.5	<0.5	1.4	<0.5

No. Observations	1	3	1	1	1	0
Minimum	4.00	0.50	2.00	3.00	1.40	0.00
Average	4.00	3.17	2.00	3.00	1.40	#DIV/0!
Maximum	4.00	7.00	2.00	3.00	1.40	0.00
90th Percentile	4.00	6.00	2.00	3.00	1.40	#NUM!
95th Percentile	4.00	6.50	2.00	3.00	1.40	#NUM!

Censored values treated as 1/2 the MDL

No. Observations	11	11	11	11	4	10
Minimum	0.25	0.50	0.25	0.25	0.50	0.25
Average	1.02	1.45	0.84	0.93	0.73	0.68
Maximum	4.00	7.00	2.50	3.00	1.40	2.50
90th Percentile	2.50	2.50	2.00	2.50	1.13	0.70
95th Percentile	3.25	4.75	2.25	2.75	1.27	1.60

	Wells: Silver (ug/l)					
Date:	**1A**	**8**	**12**	**13**	**16**	**19**
8/1/00	0.284	0.275	0.265	0.249		
1/16/01	<0.2	<0.2	<0.2	<0.2		<0.2
2/15/01	0.2	<0.2	<0.2	<0.2		<0.2
3/13/01	<0.2	<0.2	<0.2	<0.2		<0.2
4/24/01	<0.2	<0.2	<0.2	<0.2		<0.2
5/17/01	<0.2	<0.2	<0.2	<0.2		<0.2
6/5/01	<0.2	<0.2	<0.2	<0.2		<0.2
7/12/01	<0.2	<0.2	<0.2	<0.2		<0.2
7/24/02	<0.2	<0.2	<0.2	<0.2		<0.2
7/29/03	<0.2	<0.2	<0.2	<0.2		<0.2
7/19/04	<0.2	<0.2	<0.2	<0.2		<0.2
7/18/05	<0.2	<0.2	<0.2	<0.2		<0.2
4/17/06					<0.5	
7/17/06	<0.1	<0.1	<0.1	<0.1	<0.1	<0.1
7/16/07	<0.2	<0.2	<0.2	<0.2	<0.2	<0.2
10/15/07	<0.05	<0.05	<0.05	<0.05	<0.05	<0.05

No. Observations	2	1	1	1	0	0
Minimum	0.200	0.275	0.265	0.249	0.000	0.000
Average	0.242	0.275	0.265	0.249	#DIV/0!	#DIV/0!
Maximum	0.284	0.275	0.265	0.249	0.000	0.000
90th Percentile	0.276	0.275	0.265	0.249	#NUM!	#NUM!
95th Percentile	0.280	0.275	0.265	0.249	#NUM!	#NUM!

Censored values treated as 1/2 the MDL

No. Observations	15	15	15	15	3	14
Minimum	0.025	0.025	0.025	0.025	0.025	0.025
Average	0.111	0.103	0.103	0.102	0.058	0.091
Maximum	0.284	0.275	0.265	0.249	0.100	0.100
90th Percentile	0.160	0.100	0.100	0.100	0.090	0.100
95th Percentile	0.225	0.153	0.150	0.145	0.095	0.100

	Wells: Zinc ug/l					
Date:	**1A**	**8**	**12**	**13**	**16**	**19**
08/01/00	<4	<4	<4	6		
01/16/01	<4	<4	<4	<4		<4
02/15/01	12.0	<4	<4	<4		<4
03/13/01	<4	<4	<4	<4		<4
04/24/01	<4	<4	<4	<4		<4
05/17/01	<4	<4	<4	<4		<4
06/05/01	<4	<4	<4	<4		<4
07/12/01	<4	<4	<4	<4		<4
07/24/02	<4	<4	<4	<4		<4
07/29/03	<4	<4	<4	<4		<4
07/19/04	<4	<4	<4	<4		<4
07/18/05	<4	<4	<4	<4		<4
4/17/2006					1	
7/17/2006	<1	<1	<1	<1	<1	<1
7/16/2007	<1	<1	<1	<1	<1	<1
10/15/2007	1	<1	<1	<1	<1	<1

No. Observations	2	0	0	1	1	0
Minimum	1.00	0.00	0.00	5.97	1.00	0.00
Average	6.50	#DIV/0!	#DIV/0!	5.97	1.00	#DIV/0!
Maximum	12.00	0.00	0.00	5.97	1.00	0.00
90th Percentile	10.90	#NUM!	#NUM!	5.97	1.00	#NUM!
95th Percentile	11.45	#NUM!	#NUM!	5.97	1.00	#NUM!

Censored values treated as 1/2 the MDL

No. Observations	15	15	15	15	4	14
Minimum	0.50	0.50	0.50	0.50	0.50	0.50
Average	2.40	1.70	1.70	1.96	0.63	1.68
Maximum	12.00	2.00	2.00	5.97	1.00	2.00
90th Percentile	2.00	2.00	2.00	2.00	0.85	2.00
95th Percentile	5.00	2.00	2.00	3.19	0.93	2.00

	Wells: Hydrazine (ug/l)									
Date:	1A	8	11	12	13	14	15	16	18	19
2/15/2000			<10	<10	<10					
5/8/2000			<10	<10	<10					
8/1/2000			<10	<10	<10					
1/24/2001	<10	<10		<10	<10					<10
2/15/2001	<10	<10		<10	<10					<10
3/13/2001	<10	<10		<10	<10					<10
4/24/2001	<10	<10		<10	<10					<10
5/17/2001	<10	<10		<10	<10					<10
6/5/2001	<10	<10		<10	<10					<10
7/12/2001	<10	<10		<10	<10					<10
10/8/2001	<3	<3		<3	<3					<3
1/15/2002	<3	<3		<3	<3					<3
4/23/2002	<3	<3		<3	<3					<3
7/24/2002	<3	<3		<3	<3					<3
10/22/2002	<3	<3		<3	<3					<3
1/20/2003	<3	<3		<3	<3					<3
4/21/2003	<3	<3		<3	<3					<3
7/29/2003	<3	<3		<3	<3					<3
10/20/2003	<3	<3		<3	<3					<3
1/19/2004	<3	3		<3	3					<3
1/22/2004		<3			<3					
4/19/2004	<3	<3		<3	3.2					<3
7/19/2004	<3	<3		<3	<3					<3
10/18/2004	<3	<3		<3	<3					<3
1/19/2005	<3	<3		<3	<3					<3
4/18/2005	<3	<3		<3	<3					<3
7/18/2005	<3	<3		<3	<3					<3
10/17/2005	<3	<3		<3	<3					<3
1/16/2006	4.5	<3		<3	<3					<3
1/23/2006	<3									
4/17/2006	<3	<3		<3	<3			<3		<3
7/17/2006	<3	<3		<3	<3			<3		<3
7/16/2007	<3	<3		<3	<3			<3		<3

No. Observations	1	1	0	0	2	0	0	0	0	0
Minimum	4.50	3.00	0.00	0.00	3.00	0.00	0.00	0.00	0.00	0.00
Average	4.50	3.00	#DIV/0!	#DIV/0!	3.10	#DIV/0!	#DIV/0!	#DIV/0!	#DIV/0!	#DIV/0!
Maximum	4.50	3.00	0.00	0.00	3.20	0.00	0.00	0.00	0.00	0.00
90th Percentile	4.50	3.00	#NUM!	#NUM!	3.18	#NUM!	#NUM!	#NUM!	#NUM!	#NUM!
95th Percentile	4.50	3.00	#NUM!	#NUM!	3.19	#NUM!	#NUM!	#NUM!	#NUM!	#NUM!

Censored values treated as 1/2 the MDL

No. Observations	29	29	3	31	32			3		28
Minimum	1.50	1.50	5.00	1.50	1.50			1.50		1.50
Average	2.45	2.40	5.00	2.63	2.69			1.50		2.38
Maximum	5.00	5.00	5.00	5.00	5.00			1.50		5.00
90th Percentile	5.00	5.00	5.00	5.00	5.00			1.50		5.00
95th Percentile	5.00	5.00	5.00	5.00	5.00			1.50		5.00

Sampled 4/22/08

2008 well elevation

Well Number(s)	Location Description	Main use	Coordinates		Well Depth	Top of riser/pipe	Water level in ft. from top of pipe	Groundwater level (ft above sea level)	Date
MW-06-1 (REMP W-1)	Rosemary beach	REMP	N 183294.46	E 1393441.20	93	658.66	72.55	586.11	
MW-2 (REMP W-2)	Training Center	REMP Sampling	N 182,451.7	E 1,395,125.6	47.4'	630.17	30.75	599.42	
95-8A (REMP W-3)	E. Of 765 KV yard	REMP/GW permit sampling	N 180,510.5	E 1,396,322.4	22.7'	616.26	6.95	609.31	
RP-4 (REMP W-4)	West of Screen house in security Zone	REMP Sampling	N 181,639.377	E 1,392,751.454	28.00	594.28	10.41	583.87	
RP-5 (REMP W-5)	West of Screen house in security Zone	REMP Sampling	N 181,509.332	E 1,392,709.981	29.00	594.3	13.1	581.2	
RP-6 (REMP W-6)	West of Screen house in security Zone	REMP Sampling	N 181,346.614	E 1,392,657.25	20.00	594.39	10.48	583.91	
RP-7/EW2 (REMP W-7)	Livingston Road up hill, NW of chain link gate	REMP Sampling	N 179,447.797	E 1,392,848.135	96'	675.104	80.2	594.904	
MW-8 (REMP W-8)	Visitor Parking	REMP Sampling	N 182,127.4	E 1,394,124.2	31.6'	613.68	17.56	596.12	
RP-9 (EW-17) (REMP W-9)	Visitor center nature trail entrance	REMP Sampling	N 182,707.10	E 1,393,645.50	80.4'	651.26	61.75	589.51	
RP-10(EW#16) (REMP W-10)	Corner Thorton and Livingston road	REMP Sampling	N 178,689.61	E 1,396,361.82	37.4'	630.83	16.37	614.46	
RP-11 (EW-15) (REMP W-11)	E Livingston Road by gate	REMP Sampling	N 178,512.86	E 1,394,569.77	33.5'	614.38	4.8	609.58	
RP-12(EW#14) (REMP W-12)	Livingston Road	REMP Sampling	N 178,857.96	E 1,393,902.49	45.6'	620.08	15.2	604.93	
RP-13 (EW-13) (REMP W-13)	W Livingston Road by Chain link gate	REMP and GW Sampling	N 179,215.26	E 1,393,019.93	60.4'	641.75	41.6	600.15	
RP-14(95-1A) (REMP W-14)	Livingston Road up hill, NE of chain link gate	REMP and GW Sampling	N 179,676.6	E 1,393,844.6	73.3'	660.99	55.37	605.62	
RP-15/MW-12C	South of Sewage plant (SBR)	GW Permit monitoring well	N 180,678.0	E 1,392,881.9	47.4'	610.9	17.85	593.05	
EW-19-R	W of Guard House parking lot	GW Permit monitoring well	N 181,888.72	E 1,393,435.52	56.3'	612.48	20.12	592.36	
SGR-1 (OB-1)	SG Storage area	REMP Sampling	N 181,028.117	E 1,397,127.87	30'	618.18	10.1	608.08	
SGR-2 (OB-2)	SG Storage area	REMP Sampling	N 181,252.187	E 1,396,981.411	UNK	617.32	9.7	607.62	
SGR-4 (OB-4)	SG Storage area	REMP Sampling	N 181,166.568	E 1,396,798.654	UNK	616.21	8.65	607.56	
SGR-5 (OB-5)	SG Storage area	REMP Sampling	N 181,259.854	E 1,396,751.978	27.4'	624.36	17.1	607.26	
MW-20	End of Livingston Road	REMP	N 179317.38	E 1392279.76	62	631.99	40.78	591.21	
MW-21	Livington Road	REMP	N 179195.42	E 1393513.50	46	619.7	15.15	604.55	

Sampled 4/22/08

2008 well elevation

Well Number(s)	Location Description	Main use	Coordinates		Well Depth	Top of riser/pipe	Water level in ft. from top of pipe	Groundwater level (ft above sea level)	Date
OW-1	Roadway by U-2 RWST area	GW level for AB Tank testing	N 180,939.3	E 1,393,109.0	24.9	608.35	17.45	590.9	
OW-2	Roadway by chemical unloading	GW level for PHB Tank testing	N 181,705.8	E 1,393,207.4	17.95	593.75	8.97	584.78	
OW-4	Roadway by 1 RWST area	GW level for CD Tank Testing	N 181,705.8	E 1,393,207.4	33.2	608.17	16.96	591.21	
EW-18	Upper Parking Lot	2" PVC	N 180,935.058	E 1,394,772.889	57.1	631.15	26.9	604.25	
95-11a	69kv yard	Tritium	N 180,811.1	E 1,393,446.8	25	609.4	11.1	598.3	

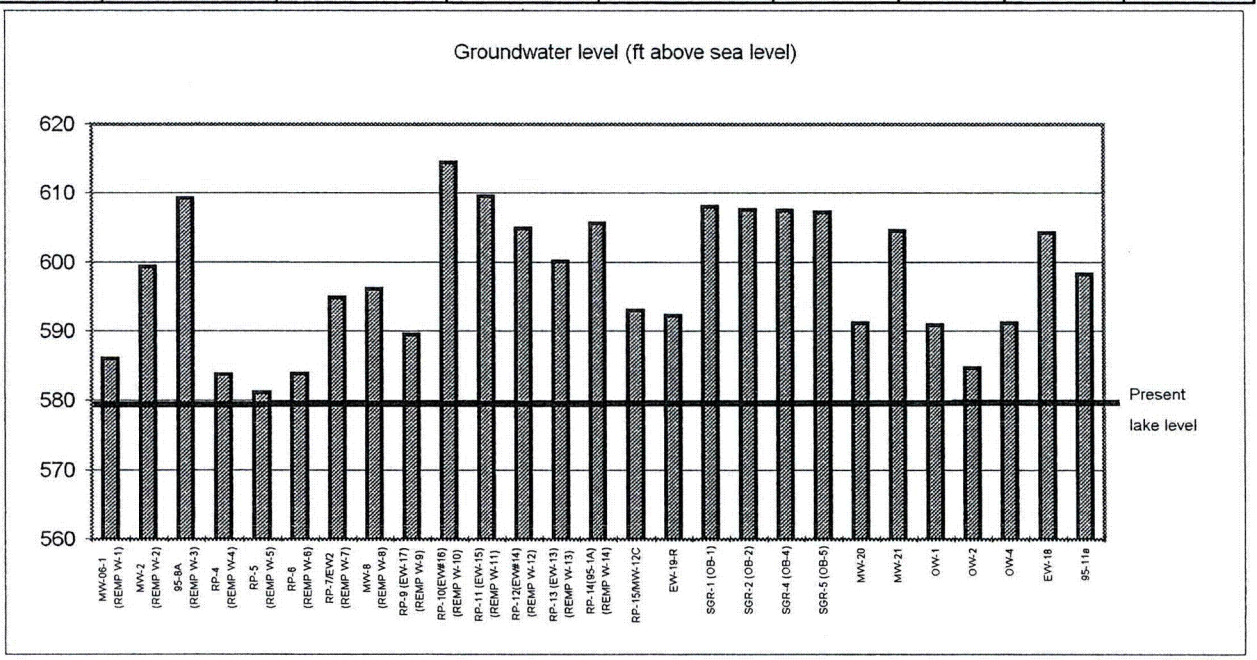

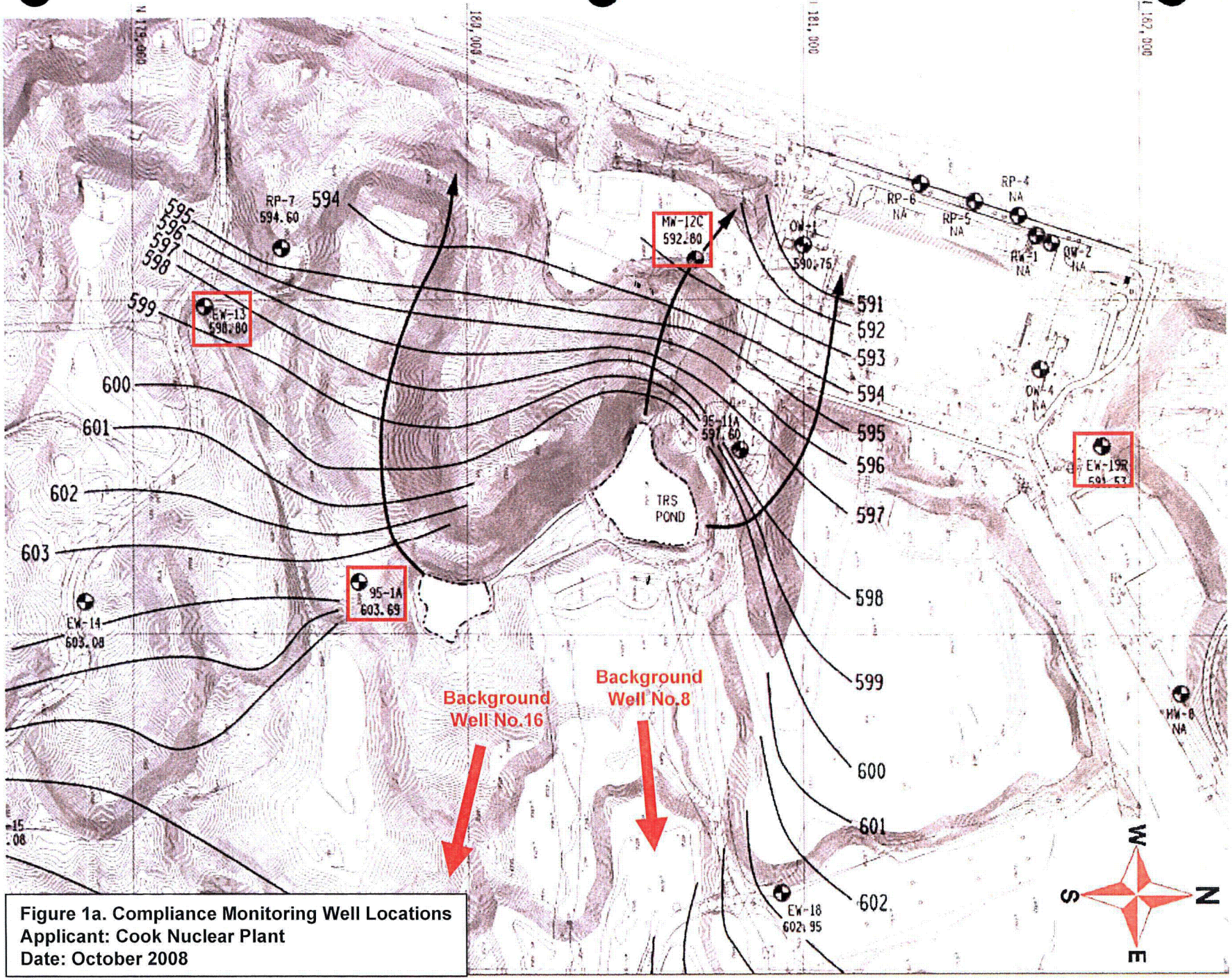

Figure 1a. Compliance Monitoring Well Locations
Applicant: Cook Nuclear Plant
Date: October 2008

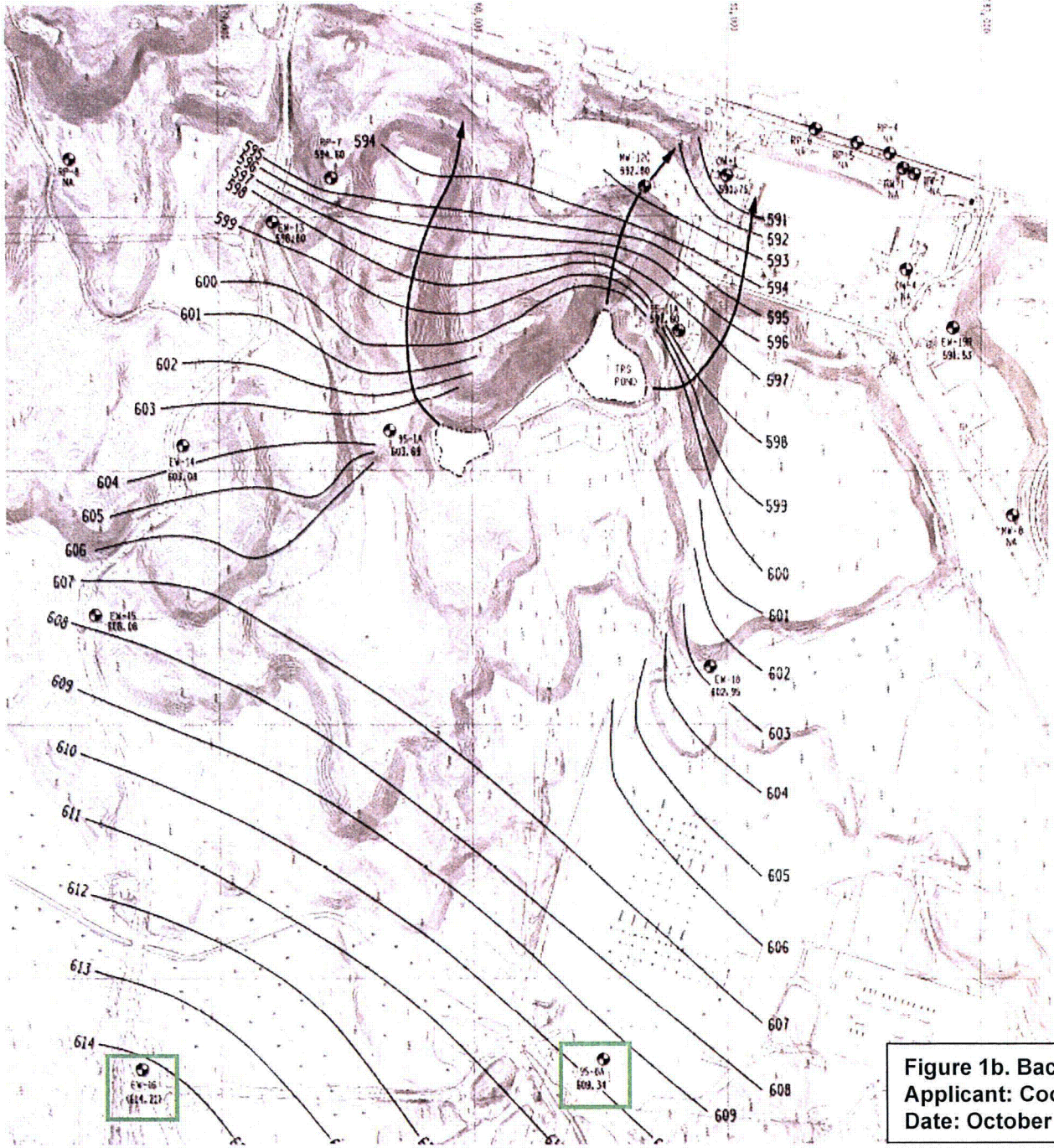

Figure 1b. Background Monitoring Well Locations
Applicant: Cook Nuclear Plant
Date: October 2008

HYDROGEOLOGICAL EVALUATION

OF THE

DONALD C. COOK NUCLEAR PLANT, BRIDGMAN, MICHGAN

Prepared for
Indiana Michigan Company

Prepared by
American Electric Power Service Corporation

July 2007

TABLE OF CONTENTS

Introduction	1
Topography	1
Geology	1
Hydrogeology	2
Ground-Water Monitoring Programs	3
Ground-Water Quality Michigan NPDES	3
Ground-Water Quality Radiological	4
Potable and Domestic Supply Wells	4
Conclusions	5
Appendix No. 1	
Well Logs	
Appendix No. 2	
Chloride Mixing Analysis	
Appendix No. 3	
Tritium Analysis	
Appendix No. 4	
Tables	
Appendix No. 5	
Figures	
AEP Drawing 12-30002	Potentiometric Map

Introduction

A hydrogeologic study has been prepared to evaluate the potential environmental impacts, if any, resulting from the discharge of the turbine room sump effluent to the plant's Turbine Room Sump Absorption (TRS) Pond. A review of previous hydrological studies indicate that the plant is underlain by a shallow unconfined aquifer composed predominantly of beach deposits and eolian dunes (AEP 1985, 1987 & 1991, AES 1990). Comparison of the original 1966-67 Dames & Moore environmental site study with long-term well hydrographs (1975 to 2007) indicates that the prevailing direction of ground water flow remains towards Lake Michigan. The plant's ground water monitoring well network was expanded in 2006 and provides a comprehensive network to detect a potential release from the plant (Figure 1). A review of the historical tritium concentrations indicate that there has been no off-site impact to domestic wells located either north or south of the plant based on a review of the various monitoring programs and environmental site investigations.

Topography

The site is located within a local physiographic area known as the Grand Meres Embayment. This area, 16 miles long and with an average width of about 1 mile, lies adjacent and parallel to the shoreline of Lake Michigan in western Berrien Country. The area adjacent to he beach is characterized by high sand dunes of Pleistocene and Recent origin. The area is bounded on the east by a glacial moraine that parallels the shoreline and is known as Covert Ridge. The area east of Covert Ridge is a glacial plain, with morainic ridges.

Topographic elevations within the dune area range from about 580 ft. NGVD, which is the elevation of Lake Michigan, to a high of slightly more than 800 ft. NGVD (Bridgman USGS 7.5 minute quadrangle map). In the southern part of the embayment, the area of high dunes extends from the lakeshore to the crest of Covert Ridge. To the north, however, the belt of high dunes is separated from Covert Ridge by Thornton Valley and the Grand Mere Lakes. The higher sand dunes extend inland about 3,000 feet from the beach. Scattered lower dunes with broader intervening flat lowlands or basins, some of which contain small shallow ponds, characterize the eastern portion of the site.

Geology

The site geology consists of a depositional sequence of glacio-lacustrine deposits composed of a surficial deposit of dune sand that overlies beach sand which in turn is underlain by glacial lake

clays, glacial till that rests unconformably over Mississippian Age shale bedrock. Figure 1 depicts the boring location plan from the original Dames & Moore (1967) site investigation.

The eolian dune sands are light brown to tan, poorly graded, typically exhibit bimodal grain sizes distribution (fine and coarse sand grains). The dune sands are easily disturbed at or near the surface and become moderately compacted at depth.

In places, the beach deposits contain a small percentage of fine gravel. The beach sand may be a bar-type deposit, probably related to an old shoreline of Lake Michigan. The maximum thickness of the beach sand is about 52 feet in the southern portion of the site. In the west-central portion of the property near the lake, the beach sands generally range from about 25 to 35 feet in thickness.

Underlying the beach sands and/or the dune sands is a thick sequence of glacial lake sediments. These glacio-lacustrine deposits, which are approximately 80 to 90 feet thick, consist generally of gray silty clay and sandy clay with occasional sand and silt partings. Varve-type bedding is not typical but does occasionally occur in places. The deposits exhibit considerable variation in detailed characteristics between borings and compromise an irregularly interbedded series of sediments.

A compact glacial till of silt and gravel with cobbles was encountered at a depth of 118 ft. This stratum is about 22 feet and is believed to be filling in any depressions in the underlying bedrock. Bedrock was encountered at a depth of 140 ft and consists of gray, thin-bedded to fissile, calcareous shale containing thin interbeds of impure, shaley limestone. The shale is horizontally bedded and is cut by two sets of cemented joints. The rock appears to correlate with the Berea-Bedford shale, a lower Mississippian formation (Dames & Moore 1967).

Hydrogeology

Covert Ridge is a groundwater barrier as well as a watershed boundary between the glacial plain to the east and the Grand Marais Embayment to the west. Static groundwater levels east of the ridge are generally at an elevation of 650 ft. NGVD (Dames & Moore 1967). In contrast, static water levels west of the ridge occur generally at elevations of 580 to 610 ft. NGVD. Depth to ground water varies from 5 ft to 80 ft depending on whether the monitoring well is sited along the crest of a dune or within a swale.

Test borings and water level measurements at the site indicate that the groundwater system is unconfined. The base of the shallow aquifer is delineated as the stratigraphic contact between the dune sand or the sandy beach deposits and the lacustine clay deposits. The surface of the lake clays slope upward gradually from elevations of about 555 to 560 ft. NGVD along the beach to about elevation 589 ft NGVD towards the southeast corner of the site (Figures 2, 3 and 4).

Ground water is recharged by precipitation infiltrating through the permeable, sandy surficial soils. Discharge to the Turbine Room Absorption (TRS) Pond also serves as a source of recharge to the shallow aquifer. The TRS pond was equipped with a Solarbee pump in 2002 to mix the effluent discharged to the pond. Overflow from the TRS pond flows along a swale into the remaining portion of the basin. The TRS pond creates a ground-water mound that superimposes a radial flow pattern from the pond center on the regional flow towards Lake Michigan. Surface runoff is limited to minor quantities and is restricted to the northeastern and eastern portion of the site. Basins of interior drainage and closed depressions characterize most of the site.

The ground-water flow system was also indirectly modified during the original construction of the plant's cofferdam. A ring of sheet piling was driven around the plant site to allow the excavation of the plant's foundation (see Construction Photos). The sheet piling was left in place and the top was cut off below grade leaving a low permeable barrier (oral communication?? 2007). Additional sheet piling was installed in 1973-74 extending both north and south along Lake Michigan to control beach erosion. This piling was also driven into the low permeable lacustrine deposits and created a barrier to ground-water flow. Ponding occurred behind the south barrier (due to the infiltration and subsequent flow of the TRS pond effluent), eventually spilling over the piling and flowing again to Lake Michigan. A French drain was installed along the south sheet piling to intercept ground water flow and discharge it towards the southern terminal end of the piling.

Drawing No. 12-30002 depicts an approximate configuration of the water table for March 2007. The configuration of the water table is also inferred from inundated dune swales observed from stereoscopic aerial photography taken March 24, 1986. The north to south direction of flow in the vicinity of RP Wells 4 and 5 is inferred from static water levels measured on November 30, 1989 in the monitoring well and recovery well (Figure 5) (AES 1990).

Well hydrographs for observation well Nos. 1a. 8, 11, and 12 depict fluctuating water levels in response to a non-uniform discharge rate to the TRS pond, seasonal evapotranspiration, and precipitation etc (Figures 6 & 7). For example, field data recorded in 1983 depicts a decline in water levels and is probable due to a precipitation deficit of nearly 7 inches. A similar decline is observed in response to the 1988 & 1999 droughts.

Short duration pumping tests yielded formation permeability values ranging from 115 to 196 ft/day with an average value of 153.5 ft/day based on an aquifer thickness of 30ft (AEP 1991). The estimated travel time to flow from the TRS pond to Lake Michigan ranges from 4.6 to 21 months based on seepage velocities and the projected flow path(Table No 6 ref. AEP 1991). The most direct flow path is due west towards Lake Michigan. The estimated travel time of 21 months is based on a flow path emanating away from the TRS pond towards RP-4. The seepage velocities are derived from site-specific hydrogeologic parameters of formation permeability, hydraulic gradients (rate and direction of ground-water flow) and estimated value of specific yield (0.25).

Ground-Water Monitoring Programs

Two separate ground-water monitoring programs are active at the plant, the radiological and the NPDES monitoring programs. Many of the monitoring wells are sampled in compliance with each program and have differing designated well numbers for the same respective well (Figure 8). Table No 1 provides a description of each well and a cross-reference table for the well numbering system. The radiological protection monitoring program is comprised of 14 monitoring wells for the plant and 4 monitoring wells for the temporary steam generator storage facility. These wells are used to monitor the shallow aquifer for radiological parameters. The NPDES ground-water monitoring program is the other monitoring program and is composed of 8 wells. Drawing No. 12-30002 depicts the location of the monitoring wells with respect to the plant's Absorption Pond, sanitary ponds and the plant's former potable supply wells. Additional well logs are also contained in Appendix No. 1 for those monitoring wells installed in 2006 under the direction of plant personnel.

Ground-Water Quality Michigan NPDES

The Michigan NPDES monitoring program is designed to evaluate significant changes in ground-water quality and potentiometric level, which occur near the Absorption Pond. The water quality of the upgradient Wells (No. 8 & 16) provide a contrast in water quality between ground-waters upgradient of the TRS pond and ground waters that are downgradient and have been influenced by the TRS pond. A key indicator parameter, chloride, exhibits a decreased concentration as a result of the TRS wastewater effluent migrating through the shallow aquifer towards Lake Michigan (AEP 1991). The downgradient NPDES observation Wells No. 95-1A and 12 detect the influence of the TRS pond as ground water flows westward into Lake Michigan.

To the north, the TRS plume is bracketed by EW-19R that exhibits a chloride concentration of 38 mg/l and is relatively unchanged from the observed upgradient concentration of 39.6 mg/l Cl at monitoring well 95-8A (Figure 9). The TRS effluent is bracketed to the south by monitoring wells EW-13 and EW-16 along Livingston Road. Chloride concentrations decrease from 76.3 mg/l Cl at upgradient well EW-16 to 57.3 mg/l Cl at monitoring well EW-13. A simple mixing calculation suggests that approximately 30% of the flow at EW-13 is derived from the TRS pond (Appendix 2).

Ground-Water Quality Radiological

A semi-annual sampling program as been initiated for the absorption pond sediments in addition to the current radiological monitoring program. Procedure (12 THP 6010 ENV. 066) has been instituted to analyze theses sediments. The test results are reviewed and evaluated as a part of the quarterly analysis of the REMP data.

Tritium has been detected in the downgradient radiological protection monitoring wells Nos. 4, 5, 6, 7 and 14(95-1A) would indicate the TRS absorption pond as the source. Appendix No. 3 lists the tritium values for the monitoring program. A rise in tritium values concentrations for effluent discharge to the abortion pond is accompanied by a detectable peak concentration in the downgradient wells. Figures 10, 11, 12 and 13 illustrate tritium activities for the radiological monitoring wells for the period of record from 1981 to 1990.

Potable and Domestic Supply Wells

The Plant's Environmental Section performed a well survey in 1990 of those residents with domestic wells located in Rosemary Beach (North of the plant) and Livingston Hills (South of the plant). The communities to the east of the plant were not involved in the well census due to the fact that they are located in a different ground-water basin and are beyond the potential influences of any plant activity.

Eight of the thirty-seven residences in the Rosemary Beach community were identified in 1990 as having wells, previously used to supply water for human consumption. The eight residences are located between 2200 feet and 4100 feet from the absorption pond. All eight wells were sample and analyzed for tritium, iodine and other gamma emitters. In all cases, there was no detectable activity identified (Liechner, 1991).

The Livingston Hills residences obtain their potable water from Lake Township Municipal water system.

As a comparison, preoperational (1974) tritium levels in ground-water range from 150-710 [Ci/1 (as shown in Annual Environmental Operating Reports). Tritium levels for lake water and drinking water samples collected in 1990 ranged from no detectable activity to 340 pCi/1.

Well 8, drilled in 1990, is located between the plant (south of Livingston Rd) and Livingston Hills to facilitate future groundwater sampling in this area. The well is located approximately 3100 feet form the plant center, and 2300 feet from the adsorption pond. Initial tritium, iodine and gamma emitter analysis of the well samples showed no detectable activity.

The Plant's former potable supply wells are located approximately 1,400 feet north of the Absorption Pond. These wells served as a source of drinking water for plant personnel and the Energy Information Center from 1970 to 1987. (The plant is now served by municipal water from Lake Township). Former Potable Well No. 2 is located downgradient of the Absorption Pond base upon the existing flow regime depicted on Drawings No. 12-30002. Former Potable Well No. 1 is located about 300 feet further inland and was influenced to a lesser degree by the absorption pond (AEP 1985). With the cessation of ground water withdrawals, the TRS plume has reduced its northern extent of migration based on the observed chloride concentrations from the NPDES monitoring program.

Conclusions

The Cook Nuclear Power Plant is sited within a ground-water basin bounded by Lake Michigan to the west and Covert Ridge (a terminal end moraine) to the east. The aquifer is unconfined and is composed of beach sands overlain by sand dunes and underlain by low permeable lacustrine clays. Construction of sheet piling and discharge to the Absorption Pond has modified existing ground-water flow directions. Discharge to the Absorption Pond has created a ground-water mound that superimposed a radial flow pattern on the regional flow towards Lake Michigan. Comparison of the original baseline flow directions with long term well hydrographs indicates that the prevailing direction of ground water flow remains unchanged and is towards Lake Michigan.

In the vicinity of R. P. Wells 4, 5, and 6, ground water flows from the north to the south. This direction of flow is confirmed by the previous hydrogeologic site investigation conducted by American Environmental Services, Inc. The northern areal extent of the TRS plume is bracketed by EW-19R and the southern areal extent is bracketed by well RP-13. It may be concluded that

there has been no off-site impact to domestic wells located either north or south of the plant based on a review of the various monitoring programs and environmental site investigations. The potential migration of tritiated water seeping from the absorption pond joins the regional flow and discharges into Lake Michigan.

References:

American Electric Power, April 1985, Hydrogeological Evaluation of the Cook Nuclear Plant, Bridgman, Michigan, prepared by Civil Engineering Div., American Electric Power Service Corp., prepared for Indiana Michigan Power Company.

American Electric Power, December 1987, Ground Water Monitoring Program Generator Storage Facility Bridgman, Michigan, prepared by Civil Engineering Div., American Electric Power Service Corp., prepared for Indiana Michigan Power Company.

American Electric Power, April 1991, Hydro geological Evaluation of the Cook Nuclear Plant, Bridgman, Michigan, prepared by Civil Engineering Div., American Electric Power Service Corp., prepared for Indiana Michigan Power Company.

American Electric Power, December 1991, Hydrogeographic Evaluation of the Cook Nuclear Plant, Bridgman, Michigan, prepared by Civil Engineering Div., American Electric Power Service Corp., prepared for Indiana Michigan Power Company.

American Environmental Services Co. Inc., July 11, 1990, Subsurface Fuel Oil Contamination Assessment and Demonstration Recovery Technology at Indiana Michigan Power Company, Donald C. Cook Nuclear Plant, Bridgman, Michigan, AES Project No. AE964 AEPC741301-04/02.

Grisak, G.E. & R.E. Jackson, 1978, "An Appraisal of the Hydrogeological Processes Involved in Shallow Subsurface Radioactive Waste Management in Canadian Terrain" Scientific Series No. 84, ISBN 0-662-10201-0

Leichner, J.L., December 19, 1991, Concentration of Tritium Downgradient of Absorption Pond, AEP File Location. DC-RS-7950

Oberlander, P.L., R.K. Skaggs, J.M. Shafer, August 1985, Mitigative Techniques for Groundwater Contamination Associated with Severe Nuclear Accidents, prepared by Pacific Northwest Laboratory Battelle Memorial Institute, prepared for Div. of Radiation Programs and Earth Sciences, NRC NUREG/CR-4251, PNL-5461 Vol.1

Walton, William C., 1984, Practical Aspects of Groundwater Modeling, pub. By National Water Well Assoc., Dublin, Ohio

Appendix No 1

Well Logs

Gary S Swierz/OR4/AEPIN
01/10/2007 01:53 PM

To Blair K Zordell/BC1/AEPIN@AEPIN
cc Darren L Romshak/AEPIN@AEPIN, Brady E Todd/MM1/AEPIN@AEPIN, Garcie M Barnett/LA1/AEPIN@AEPIN
bcc
Subject Monitoring Wells

Data obtained during the 09Jan07 survey.

Well#	Northing	Easting	Top of Pipe	Ground
06-01	183294.46	1393441.20	658.66	655.26
20	179317.38	1392279.76	631.99	629.68
21	179195.42	1393513.50	619.70	617.05

Horizontal Datum : NAD27 Michigan South
Vertical Datum : NGVD29
Unit : Foot

If there are questions, please respond.

Thanks again for your help.

Gary S. Swierz
American Electric Power
John E. Dolan Lab
4001 Bixby Road
Groveport, OH 43125
(614) 836 - 4197

AMERICAN ELECTRIC POWER SERVICE CORPORATION RP 06-01

AEP CIVIL ENGINEERING LABORATORY

MONITORING WELL CONSTRUCTION

CONTRACT.

JOB NUMBER 1518867

COMPANY EDAC

PROJECT WELL INSTALLATION

COORDINATES 183294.46 1393 41.20

SYSTEM

WELL No. RP1 BORING No. — INSTALLED EDAC

Top of Pipe: 658.66'

GROUND ELEVATION FT.

3' above ground
TOP RISER: FT.

Elevation 655.26

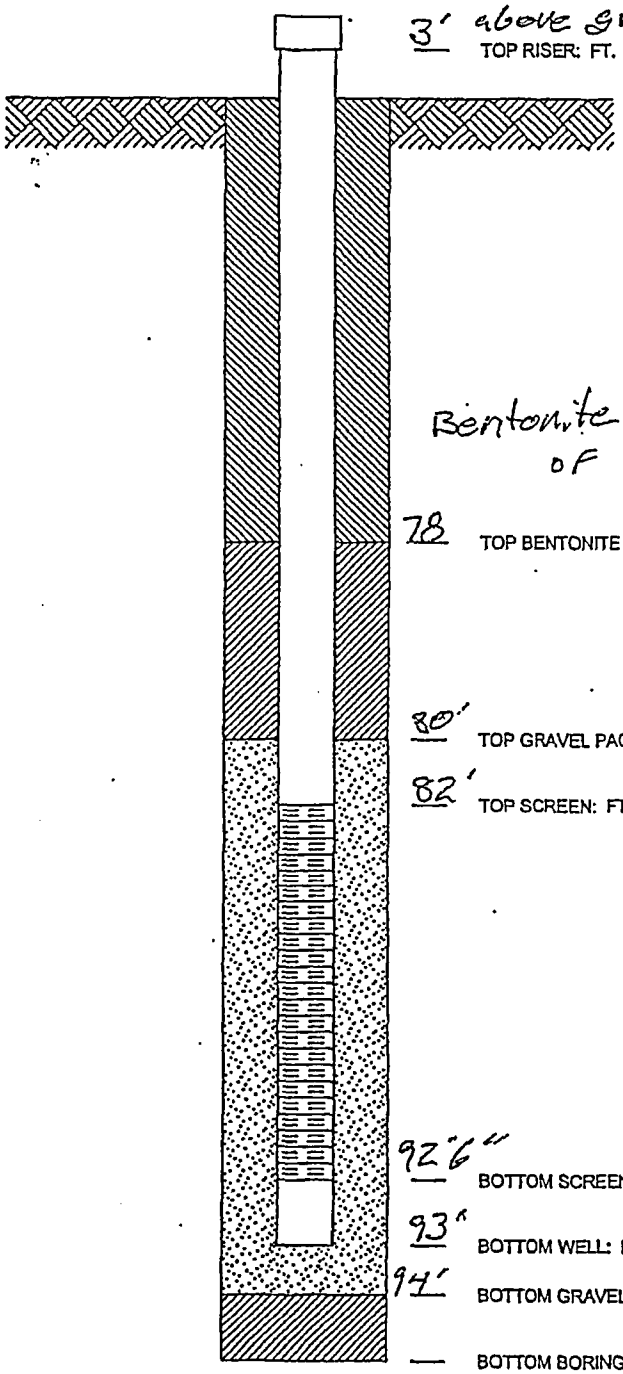

Bentonite Seal To Top of Ground

78 TOP BENTONITE SEAL: FT.

80' TOP GRAVEL PACK: FT.

82' TOP SCREEN: FT.

92'6" BOTTOM SCREEN: FT.

93' BOTTOM WELL: FT.

94' BOTTOM GRAVEL PACK: FT.

— BOTTOM BORING: FT.

GROUT SEAL:

BENTONITE SEAL:

SCREEN: dia., ,

GRAVEL PACK:

RISER PIPE: , dia.,

SPACERS, DEPTH:

BLANK_... ..._WELL_LOG BLANK BORE LOG.GPJ AEP.GDT 9/21/06

AMERICAN ELECTRIC POWER SERVICE CORPORATION
AEP CIVIL ENGINEERING LABORATORY
MONITORING WELL CONSTRUCTION

CONTRACT
JOB NUMBER 1518867
COMPANY EDAC
PROJECT WELL INSTALLATION
COORDINATES 179317.38 1392279.76
SYSTEM

WELL No. MW20 BORING No. — INSTALLED 9/25/06

1-10-07:
Top of Pipe 631.99'

GROUND ELEVATION FT.

Ground 629.68'

Horizontal Datum NAD27
Vertical Datum NGVD29
Unit foot

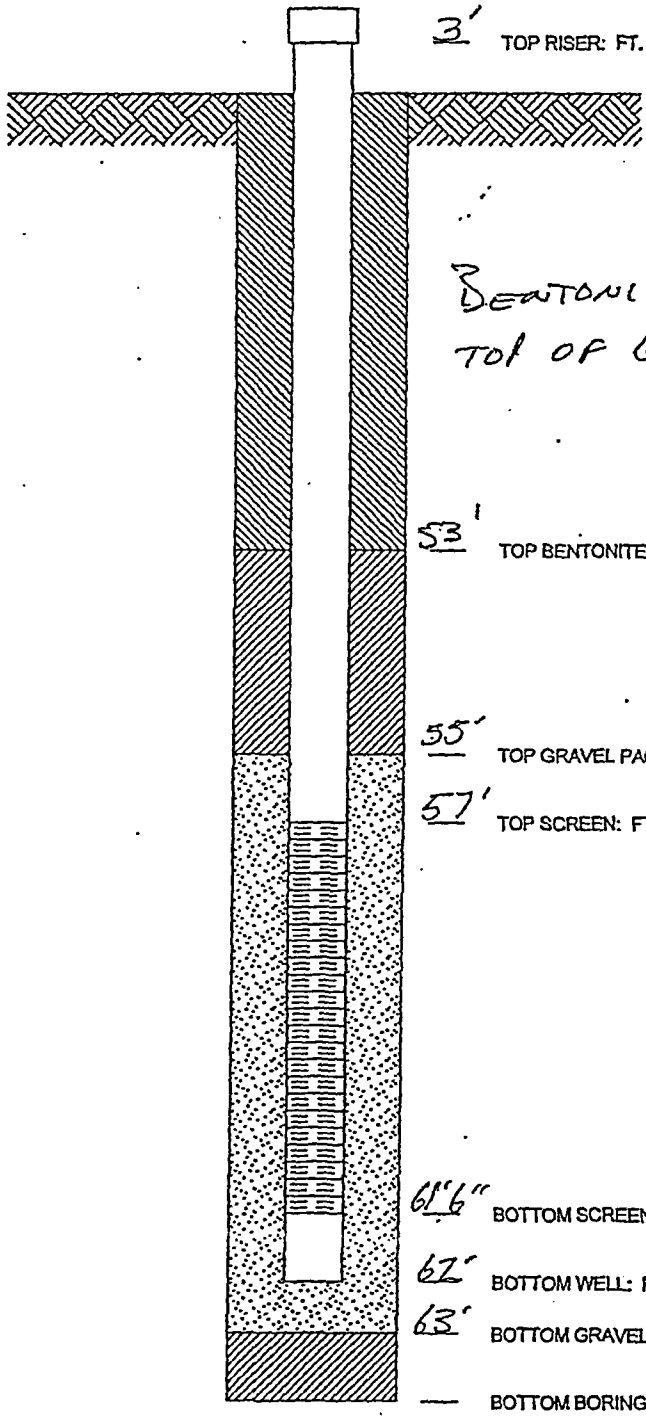

3' TOP RISER: FT.

BENTONITE SEAL / GROUT TO TOP OF GROUND.

53' TOP BENTONITE SEAL: FT.

55' TOP GRAVEL PACK: FT.

57' TOP SCREEN: FT.

61'6" BOTTOM SCREEN: FT.

62' BOTTOM WELL: FT.

63' BOTTOM GRAVEL PACK: FT.

— BOTTOM BORING: FT.

GROUT SEAL:

BENTONITE SEAL:

SCREEN: dia., ,

GRAVEL PACK:

RISER PIPE: , dia.,

SPACERS, DEPTH:

BLANK_M 3LL_LOG BLANK BORE LOG.GPJ AEP.GDT 9/21/06

AMERICAN ELECTRIC POWER SERVICE CORPORATION
AEP CIVIL ENGINEERING LABORATORY
LOG OF BORING

CONTRACT JOB NUMBER 1518867
COMPANY EDAC
PROJECT WELL INSTALLATION
ORDINATES 179317.38 1392279.76
GROUND ELEVATION 629.68 SYSTEM

WATER LEVEL	▽	▼ 44'	▽
TIME		2 PM	
DATE		9/27/06	

BORING NO. MW 20 DATE 9/25/06 SHEET 1 OF 2
BORING START 9/25/06 BORING FINISH 9/25/06
PIEZOMETER TYPE SS WELL TYPE 2" PVC - OW
HGT. RISER ABOVE GROUND 3' 629.68' DIA 2" PVC
DEPTH TO TOP OF WELL SCREEN 57' BOTTOM 61'-6"
WELL DEVELOPMENT 1 HR BACKFILL BENTONITE GROUT
FIELD PARTY S. SMITH / R. PRINS RIG GP 1300

SAMPLE NUMBER	SAMPLE	SAMPLE DEPTH IN FEET FROM	TO	STANDARD PENETRATION RESISTANCE BLOWS / 6"	TOTAL LENGTH RECOVERY	RQD %	DEPTH IN FEET	GRAPHIC LOG	USCS	SOIL / ROCK IDENTIFICATION	WELL	DRILLER'S NOTES
							5					
1		5'	7'	None	2'					Sand-m		
							10					
2		10'	12'		2'					Sand-m		
							15					
3		15'	17'		2'					Sand-m		
							20					
4		20	22		2'					Sand-m		
							25					
5		25	27		2'					sand-m		

TYPE OF CASING USED		
	NQ-2 ROCK CORE	
	6" x 3.25 HSA	
	9" x 6.25 HSA	
	HW CASING ADVANCER	4"
	NW CASING	3"
	SW CASING	6"
	AIR HAMMER	8"

Continued Next Page

PIEZOMETER TYPE: PT = OPEN TUBE POROUS TIP, SS = OPEN TUBE SLOTTED SCREEN, G = GEONOR, P = PNEUMATIC

WELL TYPE: OW = OPEN TUBE SLOTTED SCREEN, GM = GEOMON

RECORDER

ANK BORE LOG.GPJ AEP.GDT 8/21/06

BLANK

AMERICAN ELECTRIC POWER SERVICE CORPORATION
AEP CIVIL ENGINEERING LABORATORY
LOG OF BORING

ONTLAET
JOB NUMBER 1518867
COMPANY EDAL
PROJECT WELL INSTALLATION

BORING NO. MW20 DATE 9/25/06 SHEET 2 OF 2
BORING START 9/25/06 BORING FINISH 9/25/06

SAMPLE NUMBER	SAMPLE	SAMPLE DEPTH IN FEET FROM	TO	STANDARD PENETRATION RESISTANCE BLOWS / 6"	TOTAL LENGTH RECOVERY	RQD %	DEPTH IN FEET	GRAPHIC LOG	USCS	SOIL / ROCK IDENTIFICATION	WELL	DRILLER'S NOTES
6		30'	32'		2'					Sand-m		
7		35'	37'		2'		35			sand-m		
8		40'	42'		2'		40			moist sand-m		
9		45	47		2'		45			wet sand-m	▼	Water Table is at 44'
10		50	52	30 for 6"	2'		50			51' 10" ea 2" Gravel seam wet sand		
11		55'	57'		2'		55			wet Gray Sand		
							60					
							65					

Continued Next Page

JNK BORE LOG.GPJ AEP.GDT 9/21/06
BLANK L

AMERICAN ELECTRIC POWER SERVICE CORPORATION
AEP CIVIL ENGINEERING LABORATORY
MONITORING WELL CONSTRUCTION

CONTRACT
JOB NUMBER 1518867
COMPANY EDAC
PROJECT WELL INSTALLATION
COORDINATES 179195.42 1393513.50
SYSTEM

WELL No. MW21 BORING No. – INSTALLED 9/26/06

TOP of Pipe 619.70

GROUND ELEVATION . FT.

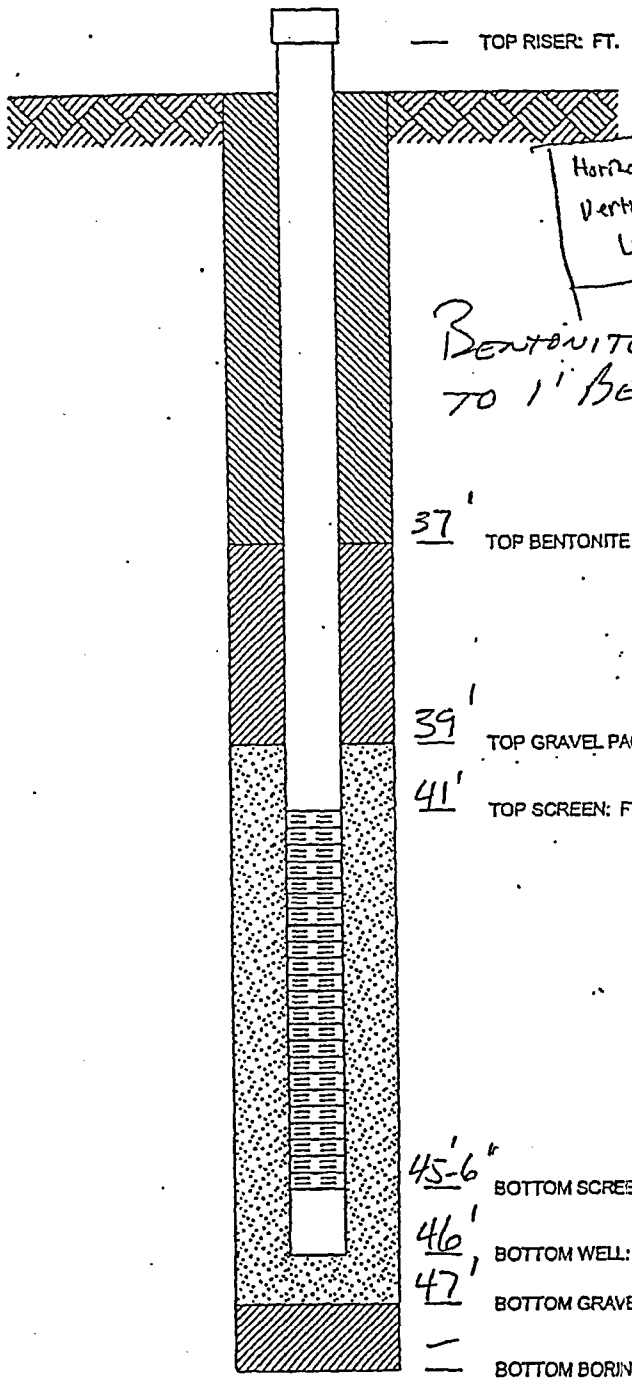

— TOP RISER: FT.

ground 617.05

Horizontal Datum NAD27
Vertical Datum NGVD29
Unit Foot

BENTONITE SEAL/GROUT TO 1' BELOW GROUND

37' TOP BENTONITE SEAL: FT.

39' TOP GRAVEL PACK: FT.

41' TOP SCREEN: FT.

45'-6" BOTTOM SCREEN: FT.

46' BOTTOM WELL: FT.

47' BOTTOM GRAVEL PACK: FT.

— BOTTOM BORING: FT.

GROUT SEAL:

BENTONITE SEAL:

SCREEN: dia., ,

GRAVEL PACK:

RISER PIPE: , dia.,

SPACERS, DEPTH:

BLANK_MONT_WELL_LOG BLANK BORE LOG.GPJ AEP.GDT 9/21/06

AMERICAN ELECTRIC POWER SERVICE CORPORATION
AEP CIVIL ENGINEERING LABORATORY
LOG OF BORING

CONTRACT

JOB NUMBER 1518867
COMPANY EDAC
PROJECT WELL INSTALLATION
COORDINATES 179195.42 1393513.50
GROUND ELEVATION 617.05 SYSTEM

BORING NO. MW21 DATE 9/26/06 SHEET 1 OF 2
BORING START 9/26/06 BORING FINISH 9/26/06
PIEZOMETER TYPE SS WELL TYPE OW
HGT. RISER ABOVE GROUND (619.70') 3' DIA 2"
DEPTH TO TOP OF WELL SCREEN 41' BOTTOM 45'-6"
WELL DEVELOPMENT 1 HR BACKFILL BENTONITE GROUT
FIELD PARTY S. SMITH / R. PLINS RIG GP1300

WATER LEVEL	▽	▼	▼
TIME		1PM	
DATE		9/26/06	

SAMPLE NUMBER	SAMPLE	SAMPLE DEPTH IN FEET FROM	TO	STANDARD PENETRATION RESISTANCE BLOWS / 6"	TOTAL LENGTH RECOVERY	RQD %	DEPTH IN FEET	GRAPHIC LOG	USCS	SOIL / ROCK IDENTIFICATION	WELL	DRILLER'S NOTES
							5					
1		5	7	No Blow Counts	2'					Med. Brown sand		
							10					
2		10	12		2'					Med. Brown sand		WTP 16'
							15					
3		15	17		2'					Med. Brown wet sand	▼	
							20					
4		20	22		2'					Med. Brown wet sand		
							25					
5		25	27							Dark Brown sand		

TYPE OF CASING USED	
NQ-2 ROCK CORE	
6" x 3.25 HSA	
9" x 6.25 HSA	
HW CASING ADVANCER	4"
NW CASING	3"
SW CASING	6"
AIR HAMMER	8"

Continued Next Page

PIEZOMETER TYPE: PT = OPEN TUBE POROUS TIP, SS = OPEN TUBE SLOTTED SCREEN, G = GEONOR, P = PNEUMATIC

WELL TYPE: OW = OPEN TUBE SLOTTED SCREEN, GM = GEOMON

RECORDER

AMERICAN ELECTRIC POWER SERVICE CORPORATION
AEP CIVIL ENGINEERING LABORATORY
LOG OF BORING

CONTRACT
JOB NUMBER 1518867
COMPANY EDAC
PROJECT WELL INSTALLATION

BORING NO. MW21 DATE 9/26/06 SHEET 2 OF 2
BORING START 9/26/06 BORING FINISH 9/26/06

SAMPLE NUMBER	SAMPLE	SAMPLE DEPTH IN FEET FROM	TO	STANDARD PENETRATION RESISTANCE BLOWS / 6"	TOTAL LENGTH RECOVERY	RQD %	DEPTH IN FEET	GRAPHIC LOG	USCS	SOIL / ROCK IDENTIFICATION	WELL	DRILLER'S NOTES
6		30	32		2'					Dark Brown Sand		
							35					
7		35	37		2'					Dark Brown Sand		
							40					
8		40	42		2'					Fine Brown Sand		
							45					
9		45	47		2'					1" Fine Brown sand 6" Black organic stuff 6" fine Brown sand		
							50					
							55					
							60					
							65					

Continued Next Page

Appendix No 2

Chloride Mixing Analysis

ENGINEERING DEPT.
AMERICAN ELECTRIC POWER SERVICE CORP.
1 RIVERSIDE PLAZA
COLUMBUS, OHIO

SHEET ____ OF ____
DATE 6/1/07 BY JMW CK: ____
COMPANY IMP G.O. ____
PLANT D. C. COOK

SUBJECT CHLORIDE MIXING ANALYSIS TRS ABSORPTION POND

WHAT IS THE AMOUNT OF FLOW DERIVED FROM THE TRS POND AT DOWNGRADIENT WELL RP-13 (EW-13).

EQ 1 $Q_t = Q_{gw} + Q_R$

WHERE Q_t total flow at RP-13 (EW-13)

Q_{gw} Flow from upgradient ~~ASSUME~~ (USE RP-10 (EW-16))

Q_R Flow from TRS POND (USE RP-14 (95-1A))

NOTE: SEE DRAWING 12-30002 POTENTIOMETRIC MAP FLOW FLOW DIRECTIONS & WELL LOCATIONS

EQ. 2 $Q_t C_t = Q_{gw} C_{gw} + Q_R C_R$

WHERE

C_t Concentration at RP-13 (EW-13)

C_{gw} Concentration of upgradient well site RP-10 (EW-16)

C_R Concentration of TRS POND RP-14 (95-1A)

NOTES: SEE MICHIGAN DNR REPORTS FOR D.C. COOK PLANT FOR TRS DISCHARGE & MONITORING WELLS

AVERAGE TRS DISCHARGE 9.4 mg/l Chloride
DOWNGRADIENT WELLS EW-12 (RP 15 (MW12C)) IS 10.1 mg/l Cl
" " EW-1A (RP 14 (95-1A)) IS 12.1 mg/l Cl

72223C1000

ENGINEERING DEPT.
AMERICAN ELECTRIC POWER SERVICE CORP.
1 RIVERSIDE PLAZA
COLUMBUS, OHIO

SHEET _____ OF _____
DATE _____ BY _____ CK. _____
COMPANY _____ G.O. _____
PLANT _____

SUBJECT _____

CONTINUE NOTES

USE CHLORIDES FOR MIXING ANALYSIS SINCE IT IS A CONSERVATIVE (I.E. NON-ATTENUATING) TRACER AND IS A KEY INDICATOR PARAMETER FOR THE TRS POND EFFLUENT.

REARRANGE EQ 1 TO EQ 3 & SUBSTITUTE INTO EQ 2

EQ 3 $\quad Q_r = Q_t - Q_{gw}$

EQ 1 (WITH SUBSTITUTION)

$$Q_t C_t = Q_{gw} C_{gw} + C_r (Q_t - Q_{gw})$$

REARRANGE TERMS

EQ 4 $$Q_{gw} = Q_t \left\{ \frac{(C_t - C_r)}{(C_{gw} - C_r)} \right\}$$

SUBSTITUTE IN MONITORING VALUES FOR CHLORIDE CONCENTRATIONS

$$Q_{gw} = Q_t \left\{ \frac{(57.3 - 12.1)}{(76.3 - 12.1)} \right\}$$

$$Q_{gw} = 0.70\, Q_t$$

AND SUBSTITUTE INTO EQ 3

$$Q_r = Q_t - (0.7\, Q_t)$$

$$Q_r = 0.3\, Q_t$$ ⇒ APPROXIMATELY 30% OF FLOW IS CONTRIBUTED FROM TRS POND.

72223C1000

ENGINEERING DEPT.
AMERICAN ELECTRIC POWER SERVICE CORP.
1 RIVERSIDE PLAZA
COLUMBUS, OHIO

SHEET _____ OF _____
DATE _____ BY _____ CK. _____
COMPANY _____ G.O. _____
PLANT _____

SUBJECT _____

REFERENCE

PAGE 100

CLARK, IAN D. & PETER FRITZ, 1997, ENVIRONMENTAL ISOTOPES IN HYDROGEOLOGY, LEWIS PUBLISHERS, BOCA RATON, FLORIDA ISBN 1-56670-249-6

72223C1000

MICHIGAN DEPARTMENT OF NATURAL RESOURCES
SURFACE WATER QUALITY DIVISION & WASTE DIVISION

DISCHARGE MONITORING REPORT DAILY MONITORING

PERMITTEE NAME/ADDRESS:
Name: Indiana Michigan Power
Address: One Cook Place
Bridgman Michigan 49106

FACILITY NAME AND LOCATION (If different than permittee)
Cook Nuclear Plant

DISCHARGE NUMBER	PERMIT NUMBER
00D	MI 0005827

MONITORING PERIOD (Yr/Mo/Da)
FROM 07/05/01 TO 07/05/31

	Sample Location	EQ -1	EQ -1	EQ -1	EQ -1	EQ -1	EQ -1	EQ -1	EQ -1	EQ -1	EF-1	EF-1	EQ -1	EQ -1	EQ -1	EQ -1
	PARA METER	Nitrate Nitrogen	pH	pH	Total Inorganic Nitrogen	Ammonia	Nitrite Nitrogen	Dissolved Sodium	Chloride	Sulfate	Flow (meas)	Flow (Calc)	Hydrazine	Ethanolamine	Oil Sheen	Dike Insp
	LIMITS		6.5	9.0							2.4	876				
DAY	UNITS	mg/l	Low	High	mg/l	mg/l	mg/l	mg/l	mg/l	mg/l	MGD	MGY	ug/l	mg/l	Sat/Unsat	Sat/Unsat
01			7.0	8.5							0.380		<3.0	0.7	Sat	
02			7.0	8.5							0.489		<3.0	<0.7	Sat	
03			7.0	8.5							0.575		<3.0	0.9	Sat	
04			7.0	8.5							0.349		<3.0	<0.7	Sat	
05			7.0	8.4							0.339					
06			7.0	8.5							0.459					
07		0.4	7.0	8.5	4.2	3.8	<0.05	2820	11.4	8360	0.383		<3.0	<0.7	Sat	Sat
08			7.0	8.5							0.443		<3.0	<0.7	Sat	
09			7.0	8.5				7.1		38	0.373		4.5	<0.7	Sat	
10			7.0	8.5							0.426		5.6	<0.7	Sat	
11			7.6	8.5							0.391		<3.0	<0.7	Sat	
12			7.0	8.5							0.388					
13			7.0	8.5							0.273					
14			7.0	8.5					11.0		0.335		<3.0	<0.7	Sat	Sat
15			7.0	8.5							0.332		<3.0	<0.7	Sat	
16			7.0	8.5							0.412		<3.0	1.0	Sat	
17			7.0	8.5							0.340		<3.0	0.7	Sat	
18			7.0	8.5							0.324		<3.0	1.2	Sat	
19			7.0	8.5							0.323					
20			7.0	8.5							0.290					
21			7.2	8.5					9.5		0.291		<3.0	<0.7	Sat	Sat
22			7.0	8.5							0.289		<3.0	<0.7	Sat	
23			7.0	8.5							0.394		<3.0	<0.7	Sat	
24			7.0	8.5							0.427		<3.0	<0.7	Sat	
25			7.0	8.5							0.372		<3.0	<0.7	Sat	
26			7.0	8.5							0.471				Sat	
27			7.0	8.5							0.397					
28			7.0	8.5					12.8		0.393		<3.0	<0.7	Sat	Sat
29			7.0	8.5							0.359		<3.0	<0.7	Sat	
30			7.0	8.5							0.371		<3.0	<0.7	Sat	
31			7.0	8.5							0.353		<3.0	<0.7	Sat	
	Total										11.744					
	MAX	0.4	7.0	8.5	4.2	3.8	0.0	2820.0	12.8	8360	0.575		5.6	1.2		

I CERTIFY UNDER PENALTY OF LAW THAT I HAVE PERSONALLY EXAMINED AND AM FAMILIAR WITH THE INFORMATION SUBMITTED HEREIN AND BASED ON MY INQUIRY OF THOSE INDIVIDUALS IMMEDIATELY RESPONSIBLE FOR OBTAINING THE INFORMATION. I BELIEVE THE SUBMITTED INFORMATION IS TRUE, ACCURATE AND COMPLETE. I AM AWARE THAT THERE ARE SIGNIFICANT PENALTIES FOR SUBMITTING FALSE INFORMATION INCLUDING THE POSSIBILITY OF FINE AND IMPRISONMENT SEE 18 USC ,1001 AND 33 USC ,1319. (PENALTIES UNDER THESE STATUTES MAY INCLUDE FINES UP TO $10,000 AND OR MAXIMUM IMPRISONMENT OF BETWEEN 6 MONTHS AND 5 YEARS.)

Blair Zordell ENV Specialist

DATE

PRINTED NAME AND TITLE OF PRINCIPLE EXECUTIVE OFFICER OR AUTHORIZE SIGNATURE OF PRINCIPLE EXECUTIVE OFFICER OR AUTHORIZED AGENT

Groundwater Quality

PERMITEE NAME: American Electric Power Company -Donald
MAILING ADDRESS: One Cook Place Bridgman, MI 49106

FACILITY: IN MI Power Co-Cook Plt
LOCATION: 1 Cook Place, Mail Zone 5A Bridgman, MI 49106

PERMIT NUMBER GW1810102
Certified Operator: Blair K. Zordell
Principle Executive Officer: John P. Carlson
Report Signed On: 2/9/2007
MONITORING PERIOD: FROM: 1/1/2007 TO: 1/31/2007

DISTRICT: Kalamazoo
COUNTY: Berrien

Parameter	Units	Sampling Frequency		EW-12	EW-13	EW-19	EW-1A	EW-8 (U.G.)	EW-16 (U.G.)
Static Water Elevation	USGS feet	Quarterly	Sample Measurement	592.62	599.15	591.62	604.25	608.94	614.07
			Permit Requirement	(report) maximum daily	(report) maximum daily	(report) maximum daily	(report) maximum daily	(report) maximum daily	(report) maximum daily
pH (Maximum)	S.U.	Quarterly	Sample Measurement	7.6	7.0	7.1	6.7	6.8	7.0
			Permit Requirement	9.0 maximum daily	9.0 maximum daily	9.0 maximum daily	9.0 maximum daily	(report) maximum daily	(report) maximum daily
pH (minimum)	S.U.	Quarterly	Sample Measurement	7.6	7.0	7.1	6.7	6.8	7.0
			Permit Requirement	6.0 minimum daily	6.0 minimum daily	6.0 minimum daily	6.0 minimum daily	(report) maximum daily	(report) maximum daily
Chloride	mg/l	Quarterly	Sample Measurement	10.1	57.3	38.0	12.1	39.6	76.3
			Permit Requirement	250 maximum daily	250 maximum daily	250 maximum daily	250 maximum daily	(report) maximum daily	(report) maximum daily
Specific Conductance	umhos/cm3	Quarterly	Sample Measurement	505	634	583	512	451	644
			Permit Requirement	(report) maximum daily	(report) maximum daily	(report) maximum daily	(report) maximum daily	(report) maximum daily	(report) maximum daily
Total Inorganic Nitrogen	mg/l	Quarterly	Sample Measurement	0.5	0.3	0.4	1.1	0.1	1.0
			Permit Requirement	5 maximum daily	5 maximum daily	5 maximum daily	5 maximum daily	(report) maximum daily	(report) maximum daily
Ammonia Nitrogen	mg/l	Quarterly	Sample Measurement	0.4	0.2	0.3	<0.1	<0.1	0.1
			Permit Requirement	(report) maximum daily	(report) maximum daily	(report) maximum daily	(report) maximum daily	(report) maximum daily	(report) maximum daily
Nitrite Nitrogen	mg/l	Quarterly	Sample Measurement	0.05	0.07	0.06	0.20	0.10	0.14
			Permit Requirement	0.5 maximum daily	0.5 maximum daily	0.5 maximum daily	0.5 maximum daily	(report) maximum daily	(report) maximum daily
Nitrate Nitrogen	mg/l	Quarterly	Sample Measurement	<0.2	<0.2	<0.2	0.9	<0.2	0.8
			Permit Requirement	(report) maximum daily	(report) maximum daily	(report) maximum daily	(report) maximum daily	(report) maximum daily	(report) maximum daily

Groundwater Quality

PERMITEE NAME: American Electric Power Company -Donald
MAILING ADDRESS: One Cook Place Bridgman, MI 49106

FACILITY: IN MI Power Co-Cook Plt
LOCATION: 1 Cook Place, Mail Zone 5A Bridgman, MI 49106

PERMIT NUMBER GW1810102
Certified Operator: Blair K. Zordell
Principle Executive Officer: John P. Carlson
Report Signed On: 2/9/2007
MONITORING PERIOD: FROM: 1/1/2007 TO: 1/31/2007

DISTRICT: Kalamazoo
COUNTY: Berrien

Parameter	Units	Sampling Frequency		EW-12	EW-13	EW-19	EW-1A	EW-8 (U.G.)	EW-16 (U.G.)
Total Phosphorus	mg/l	Quarterly	Sample Measurement	0.4	0.3	0.7	0.4	<0.1	0.3
			Permit Requirement	1 maximum daily	1 maximum daily	1 maximum daily	1 maximum daily	(report) maximum daily	(report) maximum daily
Sulfate	mg/l	Quarterly	Sample Measurement	112	47	28	124	17	26
			Permit Requirement	250 maximum daily	250 maximum daily	250 maximum daily	250 maximum daily	(report) maximum daily	(report) maximum daily
Dissolved Sodium	mg/l	Quarterly	Sample Measurement	49.9	46.1	30.1	63.9	20.2	30.5
			Permit Requirement	120 maximum daily	120 maximum daily	120 maximum daily	120 maximum daily	(report) maximum daily	(report) maximum daily
Total Dissolved Solids	mg/l	Quarterly	Sample Measurement	302	343	338	296	255	334
			Permit Requirement	(report) maximum daily	(report) maximum daily	(report) maximum daily	(report) maximum daily	(report) maximum daily	(report) maximum daily
Total Alkalinity	mg/l	Annually	Sample Measurement	*G	*G	*G	*G	*G	*G
			Permit Requirement	(report) maximum daily	(report) maximum daily	(report) maximum daily	(report) maximum daily	(report) maximum daily	(report) maximum daily
Bicarbonate	mg/l	Annually	Sample Measurement	*G	*G.	*G.	*G	*G	*G
			Permit Requirement	(report) maximum daily	(report) maximum daily	(report) maximum daily	(report) maximum daily	(report) maximum daily	(report) maximum daily
Dissolved Calcium	mg/l	Annually	Sample Measurement	*G	*G	*G	*G	*G	*G
			Permit Requirement	(report) maximum daily	(report) maximum daily	(report) maximum daily	(report) maximum daily	(report) maximum daily	(report) maximum daily
Dissolved Iron	mg/l	Annually	Sample Measurement	*G	*G	*G	*G	*G	*G
			Permit Requirement	(report) maximum daily	(report) maximum daily	(report) maximum daily	(report) maximum daily	(report) maximum daily	(report) maximum daily
Dissolved Magnesium	mg/l	Annually	Sample Measurement	*G	*G	*G	*G	*G	*G
			Permit Requirement	200 maximum daily	200 maximum daily	200 maximum daily	200 maximum daily	(report) maximum daily	(report) maximum daily

Appendix No 3

Tritium Analysis

COOK PLANT WELLS

Date	1	Date	2	Date	3	Date	4	Date	5	Date	6	Date	7	Date	8	Date	9	Date	10	Date	11	Date	12	Date	13	Date	14
Jul-72		Jul-72		Jul-72		Jul-72		Jul-72		Jul-72		Jul-72															
Jan-74		Jan-74	590	Jan-74	710	Jan-74	600	Jan-74	390	Jan-74	580	Jan-74															
May-74	560	May-74	560	May-74	150	May-74	540	May-74	250	May-74	350	May-74	670														
Sep-74		Sep-74		Sep-74		Sep-74		Sep-74		Sep-74		Sep-74															
Mar-77		Mar-77		Mar-77		Mar-77		Mar-77		Mar-77		Mar-77															
Jul-77		Jul-77		Jul-77		Jul-77		Jul-77		Jul-77		Jul-77															
Nov-77		Nov-77		Nov-77		Nov-77	640	Nov-77	680	Nov-77	9000	Nov-77															
Apr-78	500	Apr-78	400	Apr-78	500	Apr-78	6800	Apr-78	2900	Apr-78	3900	Apr-78	500														
Aug-78		Aug-78		Aug-78		Aug-78	7800	Aug-78	1400	Aug-78		Aug-78															
Dec-78		Dec-78		Dec-78		Dec-78	2400	Dec-78	1700	Dec-78		Dec-78															
Apr-79		Apr-79		Apr-79		Apr-79	17000	Apr-79	12000	Apr-79		Apr-79															
Aug-79	700	Aug-79	850	Aug-79	5100	Aug-79	5100	Aug-79	2100	Aug-79	2100	Aug-79	2500														
Dec-79		Dec-79		Dec-79		Dec-79	3800	Dec-79	3500	Dec-79		Dec-79															
Dec-80	1000	Dec-80	1000	Dec-80	1000	Dec-80	5400	Dec-80	1700	Dec-80	1400	Dec-80	1000	Jan-92	200	Jan-92	200	Jan-92	200	Jan-92	200	Jan-92	200	Jan-92	950	Jan-92	
Dec-81	800	Dec-81	1000	Dec-81	1200	Dec-81	1400	Dec-81	1500	Dec-81	1200	Dec-81	900	Apr-92	100	Apr-92	100	Apr-92	100	Apr-92	100	Apr-92	120	Apr-92	650	Apr-92	
Dec-82	1000	Dec-82	1000	Dec-82	1000	Dec-82	2100	Dec-82	2100	Dec-82	1100	Dec-82	1000	Jul-92	100	Jul-92	100	Jul-92	140	Jul-92	100	Jul-92	100	Jul-92	490	Jul-92	
Dec-83	1000	Dec-83	1000	Dec-83	1000	Dec-83	8400	Dec-83	3300	Dec-83	4100	Dec-83	1000	Oct-92	100	Oct-92	100	Oct-92	100	Oct-92	100	Oct-92	100	Oct-92	260	Oct-92	
Dec-84	1190	Dec-84	1030	Dec-84	1260	Dec-84	7890	Dec-84	5700	Dec-84	5690	Dec-84	2000	Jan-93	330	Jan-93	100	Jan-93	100	Jan-93	370	Jan-93	410	Jan-93	410	Jan-93	100
Dec-85	500	Dec-85	500	Dec-85	500	Dec-85	7440	Dec-85	4240	Dec-85	2120	Dec-85	1570	May-93	200	May-93	200	May-93	200	May-93	200	May-93	200	May-93	200	May-93	480
Dec-86	300	Dec-86	300	Dec-86	300	Dec-86	2500	Dec-86	4734	Dec-86	965	Dec-86	2412	Aug-93	100	Aug-93	100	Aug-93	100	Aug-93	200	Aug-93	100	Aug-93	200	Aug-93	950
Dec-87	300	Dec-87	300	Dec-87	300	Dec-87	4444	Dec-87	2631	Dec-87	816	Dec-87	5563	Nov-93	200	Nov-93	200	Nov-93	200	Nov-93	200	Nov-93	200	Nov-93	170	Nov-93	1100
Dec-88	602	Dec-88	300	Dec-88	435	Dec-88	6033	Dec-88	3141	Dec-88	2165	Dec-88	2155	Jan-94		Jan-94	200	Jan-94	200	Jan-94	200	Jan-94	200	Jan-94	200	Jan-94	
Dec-89	2400	Dec-89	2400	Dec-89	887	Dec-89	2297	Dec-89	1932	Dec-89	1564	Dec-89	1000	May-94	200	May-94	200	May-94	200	May-94	200	May-94	200	May-94	100	May-94	1700
Dec-90	230	Dec-90	130	Dec-90	170	Dec-90	860	Dec-90	978	Dec-90	663	Dec-90	165	Jul-94	100	Jul-94	100	Jul-94	100	Jul-94	200	Jul-94	100	Jul-94	100	Jul-94	440
Dec-91	210	Dec-91	200	Dec-91	175	Dec-91	950	Dec-91	805	Dec-91	420	Dec-91	1450	Oct-94	170	Oct-94	200	Oct-94	200	Oct-94	200	Oct-94	200	Oct-94	200	Oct-94	640
Dec-92	150	Dec-92	120	Dec-92	150	Dec-92	1060	Dec-92	423	Dec-92	458	Dec-92	1238	Jan-95	200	Jan-95	200	Jan-95	200	Jan-95	200	Jan-95	200	Jan-95	200	Jan-95	7000
Dec-93	150	Dec-93	175	Dec-93	200	Dec-93	980	Dec-93	687.5	Dec-93	845	Dec-93	463	Apr-95	200	Apr-95	200	Apr-95	200	Apr-95	200	Apr-95	300	Apr-95	300	Apr-95	2100
Dec-94	175	Dec-94	200	Dec-94	225	Dec-94	908	Dec-94	493	Dec-94	543	Dec-94	187	Jul-95	200	Jul-95	200	Jul-95	200	Jul-95	290	Jul-95	1900	Jul-95	250	Jul-95	300
Jan-95	200	Jan-95	200	Jan-95	200	Jan-95	920	Jan-95	950	Jan-95	430	Jan-95	200	Oct-95	200	Oct-95	200	Oct-95	200	Oct-95	200	Oct-95	200	Oct-95	200	Oct-95	200
Apr-95	200	Apr-95	200	Apr-95	200	Apr-95	760	Apr-95	520	Apr-95	670	Apr-95	200	Jan-96	200	Jan-96	200	Jan-96	200	Jan-96	200	Jan-96	200	Jan-96	200	Jan-96	340
Jul-95	200	Jul-95	200	Jul-95	200	Jul-95	450	Jul-95	390	Jul-95	200	Jul-95	200	Apr-96	200	Apr-96	260	Apr-96	200	Apr-96	460	Apr-96	300	Apr-96	370	Apr-96	2000
Oct-95	200	Oct-95	200	Oct-95	200	Oct-95	200	Oct-95	330	Oct-95	500	Oct-95	200	Jul-96	200	Jul-96	100	Jul-96	200	Jul-96	200	Jul-96	200	Jul-96	200	Jul-96	5300
Jan-96	200	Jan-96	200	Jan-96	200	Jan-96	640	Jan-96	320	Jan-96	1600	Jan-96	200	Oct-96	200	Oct-96	200	Oct-96	200	Oct-96	200	Oct-96	200	Oct-96	210	Oct-96	14000
Apr-96	200	Apr-96	200	Apr-96	200	Apr-96	1300	Apr-96	1100	Apr-96	1100	Apr-96	250	Jan-97	100	Jan-97	100	Jan-97	100	Jan-97	100	Jan-97	100	Jan-97	100	Jan-97	7300
Jul-96	100	Jul-96	200	Jul-96	100	Jul-96	1300	Jul-96	840	Jul-96	560	Jul-96	200	Apr-97	100	Apr-97	100	Apr-97	200	Apr-97	200	Apr-97	200	Apr-97	200	Apr-97	19000
Oct-96	200	Oct-96	200	Oct-96	200	Oct-96	1110	Oct-96	810	Oct-96	860	Oct-96	200	Jul-97	300	Jul-97	200	Jul-97	200	Jul-97	300	Jul-97	300	Jul-97	300	Jul-97	16000
Jan-97	100	Jan-97	100	Jan-97	100	Jan-97	1300	Jan-97	540	Jan-97	840	Jan-97	100	Oct-97	200	Oct-97	200	Oct-97	200	Oct-97	200	Oct-97	200	Oct-97	200	Oct-97	1100
Apr-97	100	Apr-97	100	Apr-97	100	Apr-97	1500	Apr-97	980	Apr-97	1200	Apr-97	100	Jan-98	200	Jan-98	200	Jan-98	200	Jan-98	200	Jan-98	200	Jan-98	200	Jan-98	1800
Jul-97	200	Jul-97	300	Jul-97	200	Jul-97	1500	Jul-97	340	Jul-97	2200	Jul-97	200	Apr-98	100	Apr-98	100	Apr-98	100	Apr-98	100	Apr-98	100	Apr-98	100	Apr-98	100
Oct-97	200	Oct-97	200	Oct-97	200	Oct-97	1200	Oct-97	210	Oct-97	2700	Oct-97	200	Jul-98	100	Jul-98	100	Jul-98	100	Jul-98	100	Jul-98	100	Jul-98	100	Jul-98	100
Jan-98	200	Jan-98	200	Jan-98	200	Jan-98	1200	Jan-98	3000	Jan-98	1700	Jan-98	200	Oct-98	210	Oct-98	200	Oct-98	200	Oct-98	200	Oct-98	200	Oct-98	200	Oct-98	200
Apr-98	100	Apr-98	100	Apr-98	100	Apr-98	1600	Apr-98	290	Apr-98	1000	Apr-98	100	Jan-99	160	Jan-99	100	Jan-99	100	Jan-99	100	Jan-99	100	Jan-99	100	Jan-99	140
Jul-98	100	Jul-98	100	Jul-98	100	Jul-98	1700	Jul-98	1600	Jul-98	3300	Jul-98	100	Apr-99	200	Apr-99	200	Apr-99	180	Apr-99	200	Apr-99	200	Apr-99	200	Apr-99	180
Oct-98	200	Oct-98	200	Oct-98	200	Oct-98	2300	Oct-98	750	Oct-98	1400	Oct-98	200	Jul-99	200	Jul-99	200	Jul-99	200	Jul-99	200	Jul-99	200	Jul-99	200	Jul-99	200
Jan-99	100	Jan-99	100	Jan-99	100	Jan-99	930	Jan-99	870	Jan-99	2100	Jan-99	100	Oct-99	300	Oct-99	300	Oct-99	300	Oct-99	300	Oct-99	300	Oct-99	300	Oct-99	1900
Apr-99	200	Apr-99	200	Apr-99	200	Apr-99	1200	Apr-99	540	Apr-99	420	Apr-99	200	Jan-00	300	Jan-00	300	Jan-00	300	Jan-00	300	Jan-00	300	Jan-00	300	Jan-00	370
Jul-99	230	Jul-99	200	Jul-99	200	Jul-99	2700	Jul-99	340	Jul-99	510	Jul-99	200	Apr-00	200	Apr-00	200	Apr-00	200	Apr-00	200	Apr-00	200	Apr-00	200	Apr-00	3000
Oct-99	300	Oct-99	300	Oct-99	300	Oct-99	2200	Oct-99	360	Oct-99	590	Oct-99	300	Jul-00	200	Jul-00	200	Jul-00	200	Jul-00	200	Jul-00	200	Jul-00	200	Jul-00	2700
Jan-00	300	Jan-00	300	Jan-00	300	Jan-00	1400	Jan-00	300	Jan-00	540	Jan-00	200	Oct-00	200	Oct-00	200	Oct-00	200	Oct-00	200	Oct-00	200	Oct-00	200	Oct-00	210
Apr-00	200	Apr-00	200	Apr-00	200	Apr-00	1000	Apr-00	400	Apr-00	550	Apr-00	200	Jan-01	100	Jan-01	100	Jan-01	100	Jan-01	100	Jan-01	100	Jan-01	100	Jan-01	180
Jul-00	200	Jul-00	200	Jul-00	200	Jul-00	900	Jul-00	210	Jul-00	1700	Jul-00	200	Apr-01	100	Apr-01	100	Apr-01	100	Apr-01	100	Apr-01	100	Apr-01	100	Apr-01	250
Oct-00	200	Oct-00	200	Oct-00	200	Oct-00	750	Oct-00	240	Oct-00	3000	Oct-00	200	Jul-01	100	Jul-01	100	Jul-01	100	Jul-01	100	Jul-01	100	Jul-01	100	Jul-01	230
Jan-01	100	Jan-01	100	Jan-01	100	Jan-01	540	Jan-01	300	Jan-01	1700	Jan-01	100	Oct-01	100	Oct-01	100	Oct-01	100	Oct-01	100	Oct-01	100	Oct-01	100	Oct-01	260
Apr-01	100	Apr-01	100	Apr-01	100	Apr-01	480	Apr-01	320	Apr-01	1600	Apr-01	100	Jan-02	0	Jan-02	0	Jan-02	60	Jan-02	30	Jan-02	290	Jan-02	0	Jan-02	450
Jul-01	100	Jul-01	100	Jul-01	100	Jul-01	460	Jul-01	220	Jul-01	1000	Jul-01	100	Apr-02	440	Apr-02	500	Apr-02	690	Apr-02	200	Apr-02	0	Apr-02	1200	Apr-02	870
Oct-01	100	Oct-01	100	Oct-01	100	Oct-01	460	Oct-01	350	Oct-01	420	Oct-01	100	Jul-02	90	Jul-02	140	Jul-02	150	Jul-02	0	Jul-02	0	Jul-02	60	Jul-02	360
Jan-02	280	Jan-02	170	Jan-02	0	Jan-02	500	Jan-02	240	Jan-02	640	Jan-02	0	Oct-02	0	Oct-02	270	Oct-02	180	Oct-02	380	Oct-02	150	Oct-02	430	Oct-02	110
Apr-02	0	Apr-02	0	Apr-02	0	Apr-02	500	Apr-02	0	Apr-02	310	Apr-02	0	Jan-03	20	Jan-03	50	Jan-03	0	Jan-03	0	Jan-03	0	Jan-03	180	Jan-03	490
Jul-02	0	Jul-02	150	Jul-02	0	Jul-02	970	Jul-02	760	Jul-02	720	Jul-02	0	Apr-03	0	Apr-03	0	Apr-03	0	Apr-03	0	Apr-03	0	Apr-03	0	Apr-03	0
Oct-02	0	Oct-02	370	Oct-02	80	Oct-02	1000	Oct-02	620	Oct-02	0	Oct-02	260	Jul-03	0	Jul-03	0	Jul-03	0	Jul-03	0	Jul-03	0	Jul-03	0	Jul-03	0
Jan-03	20	Jan-03	0	Jan-03	0	Jan-03	560	Jan-03	910	Jan-03	710	Jan-03	260	Oct-03	0	Oct-03	0	Oct-03	50	Oct-03	0	Oct-03	0	Oct-03	0	Oct-03	1150
Apr-03	0	Apr-03	0	Apr-03	0	Apr-03	0	Apr-03	0	Apr-03	0	Apr-03	0	Jan-04	240	Jan-04	260	Jan-04	210	Jan-04	10	Jan-04	660	Jan-04	800	Jan-04	390
Jul-03	110	Jul-03	0	Jul-03	0	Jul-03	0	Jul-03	0	Jul-03	320	Jul-03	0	Apr-04	0	Apr-04	0	Apr-04	0	Apr-04	0	Apr-04	0	Apr-04	400	Apr-04	200
Oct-03	140	Oct-03	0	Oct-03	370	Oct-03	310	Oct-03	0	Oct-03	60	Oct-03	0	Jul-04	0	Jul-04	0	Jul-04	150	Jul-04	0	Jul-04	0	Jul-04	0	Jul-04	0
Jan-04	140	Jan-04	390	Jan-04	350	Jan-04	690	Jan-04	460	Jan-04	600	Jan-04	500	Oct-04	0	Oct-04	60	Oct-04	0	Oct-04	0	Oct-04	0	Oct-04	0	Oct-04	0
Apr-04	0	Apr-04	0	Apr-04	0	Apr-04	0	Apr-04	350	Apr-04	340	Apr-04	0	Jan-05	340	Jan-05	780	Jan-05	350	Jan-05	0	Jan-05	190	Jan-05	320	Jan-05	0
Jul-04	0	Jul-04	0	Jul-04	0	Jul-04	270	Jul-04	510	Jul-04	0	Jul-04	0	Apr-05	530	Apr-05	80	Apr-05	50	Apr-05	0	Apr-05	30	Apr-05	0	Apr-05	580
Oct-04	210	Oct-04	0	Oct-04	0	Oct-04	110	Oct-04	0	Oct-04	900	Oct-04	0	Jul-05	0	Jul-05	0	Jul-05	0	Jul-05	510	Jul-05	0	Jul-05	0	Jul-05	130
Jan-05	840	Jan-05	330	Jan-05	660	Jan-05	510	Jan-05	0	Jan-05	660	Jan-05	80	Oct-05	80	Oct-05	910	Oct-05	750	Oct-05	210	Oct-05	0	Oct-05	270	Oct-05	880
Apr-05	400	Apr-05	0	Apr-05	0	Apr-05	870	Apr-05	720	Apr-05	240	Apr-05	510	Oct-02		Oct-02		Oct-02		Oct-02		Oct-02		Oct-02		Oct-02	
Jul-05	0	Jul-05	560	Jul-05	140	Jul-05	830	Jul-05	60	Jul-05	750	Jul-05	0	Jan-03		Jan-03		Jan-03		Jan-03		Jan-03		Jan-03		Jan-03	
Oct-05	0	Oct-05	0	Oct-05	800	Oct-05	170	Oct-05	930	Oct-05	480	Oct-05	370	Apr-03		Apr-03		Apr-03		Apr-03		Apr-03		Apr-03		Apr-03	

Appendix No 4

Table

TABLE 1

Well Elevations
Data taken 3/29/07

2007 well elevation

Well Number(s)	Location Description	Main use	Coordinates		Well Depth	Top of riser/pipe	Water level in ft. from top of pipe	Groundwater level (ft above sea level)
MW-06-1 (REMP W-1)	Rosemary beach	REMP	N 183294.46	E 1393441.20	93	658.66	73.35	585.31
MW-2 (REMP W-2)	Training Center	REMP Sampling	N 182,451.7	E 1,395,125.6	47.4'	630.17	31.55	598.62
95-8A (REMP W-3)	E. Of 765 KV yard	REMP/GW permit sampling	N 180,510.5	E 1,396,322.4	22.7'	616.26	7.35	608.91
RP-4 (REMP W-4)	West of Screen house in security Zone	REMP Sampling	N 181,639.377	E 1,392,751.454	25.2	594.28	10.9	583.38
RP-7/EW2 (REMP W-7)	Livingston Road up hill, NW of chain link gate	REMP Sampling	N 179,447.797	E 1,392,848.135	96'	675.104	79.8	595.304
MW-8 (REMP W-8)	Visitor Parking	REMP Sampling	N 182,127.4	E 1,394,124.2	31.6'	613.68	18.55	595.13
RP-9 (EW-17) (REMP W-9)	Visitor center nature trail entrance	REMP Sampling	N 182,707.10	E 1,393,645.50	80.4'	651.26	62.6	588.66
RP-10(EW#16) (REMP W-10)	Corner Thorton and Livingston road	REMP Sampling	N 178,689.61	E 1,396,361.82	37.4'	630.83	16.65	614.18
RP-11 (EW-15) (REMP W-11)	E Livingston Road by gate	REMP Sampling	N 178,512.86	E 1,394,569.77	33.5'	614.38	5.45	608.93
RP-12(EW#14) (REMP W-12)	Livingston Road	REMP Sampling	N 178,857.96	E 1,393,902.49	45.6'	620.08	16.0	604.08
RP-13 (EW-13) (REMP W-13)	W Livingston Road by Chain link gate	REMP and GW Sampling	N 179,215.26	E 1,393,019.93	60.4'	641.75	42.2	599.55
RP-14(95-1A) (REMP W-14)	Livingston Road up hill, NE of chain link gate	REMP and GW Sampling	N 179,676.6	E 1,393,844.6	73.3'	660.99	56.2	604.79
RP-15/MW-12C	South of Sewage plant (SBR)	GW Permit monitoring well	N 180,678.0	E 1,392,881.9	47.4'	610.9	18.2	592.7
EW-19-R	W of Guard House parking lot	GW Permit monitoring well	N 181,888.72	E 1,393,435.52	56.3'	612.48	20.7	591.78
SGR-1 (OB-1)	SG Storage area	REMP Sampling	N 181,028.117	E 1,397,127.87	30'	618.18	10.5	607.68
SGR-2 (OB-2)	SG Storage area	REMP Sampling	N 181,252.187	E 1,396,981.411	UNK	617.32	10.3	607.02
SGR-4 (OB-4)	SG Storage area	REMP Sampling	N 181,166.568	E 1,396,798.654	UNK	616.21	9.2	607.01
SGR-5 (OB-5)	SG Storage area	REMP Sampling	N 181,259.854	E 1,396,751.978	27.4'	624.36	17.8	606.56
MW-20	End of Livingston Road	REMP	N 179317.38	E 1392279.76	62	631.99	41.55	590.44
MW-21	Livington Road	REMP	N 179195.42	E 1393513.50	46	619.7	17.65	602.05
OW-1	Roadway by U-2 RWST area	GW level for AB Tank testing	N 180,939.3	E 1,393,109.0	24.9	608.35	17.65	590.7
OW-2	Roadway by chemical unloading	GW level for PHB Tank testing	N 181,705.8	E 1,393,207.4	17.95	593.75	9.35	584.4
OW-4	Roadway by 1 RWST area	GW level for CD Tank Testing	N 181,705.8	E 1,393,207.4	33.2	608.17	17.55	590.62

Appendix No 5

Figures

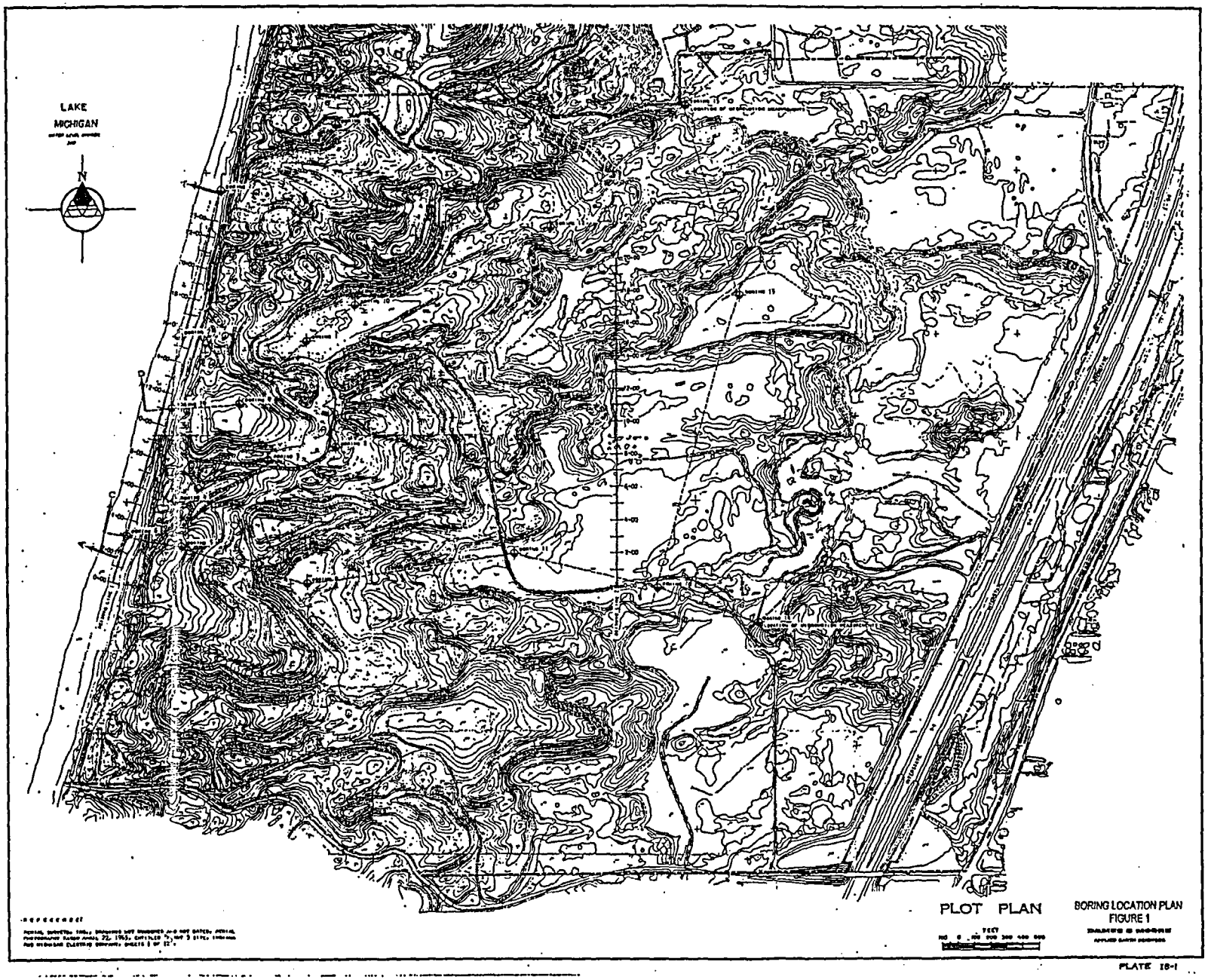

PLATE 18-1

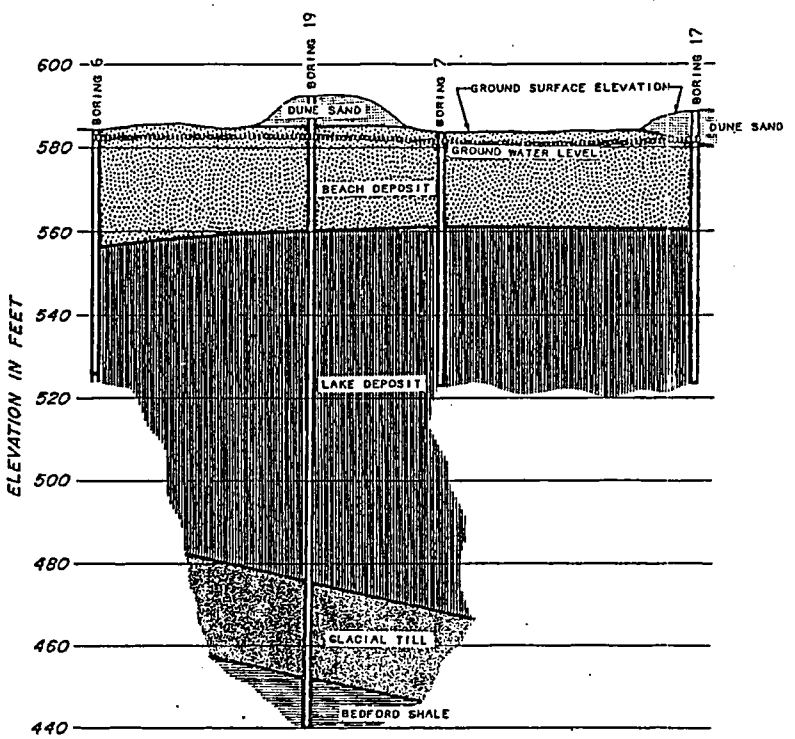

SECTION A–A

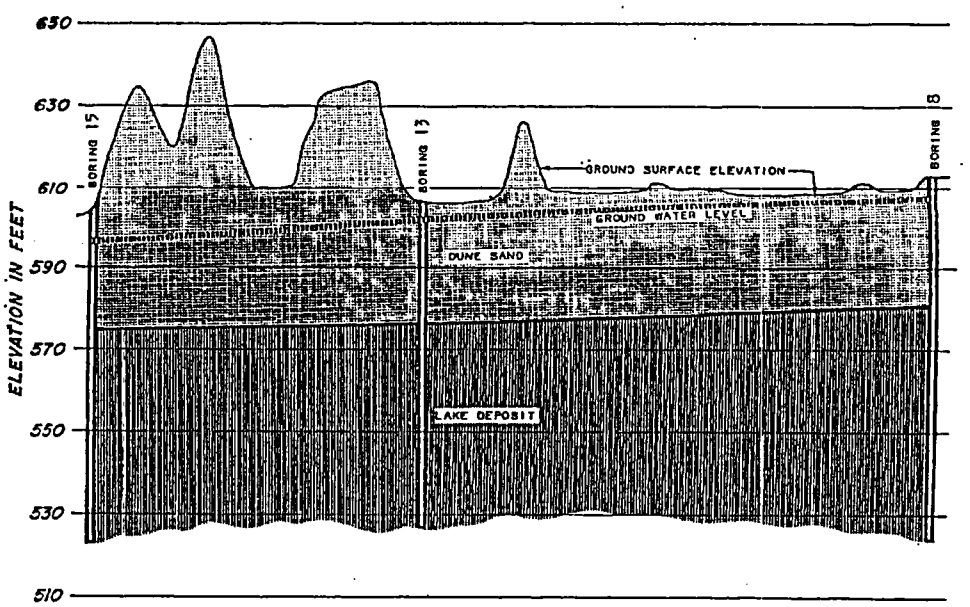

SECTION B–B

HORIZONTAL SCALE IN FEET

500 0 500 1000

NOTE:

SUBSURFACE CONDITIONS ILLUSTRATED ABOVE WERE OBTAINED BY INTERPOLATION BETWEEN BORINGS. CONSEQUENTLY, VARIATIONS WHICH ARE NOT INDICATED BY THE CROSS-SECTION CAN BE EXPECTED BETWEEN BORING LOCATIONS.

GEOLOGIC CROSS-SECTIONS

FIGURE 2

DAMES & MOORE

PLATE IIA-10a

REVISIONS BY ____ DATE ____ BY ____ DATE ____ PLATE ____ OF ____

FILE 4853-001 BY D.J. Gass DATE 2-20-62 CHECKED BY ____ DATE ____

FILE 4855-001
BY D.J.Q. DATE 2-20-67
CHECKED BY GJR DATE 2/22/67

REVISIONS
BY _____ DATE _____
BY _____ DATE _____
PLATE _____ OF _____

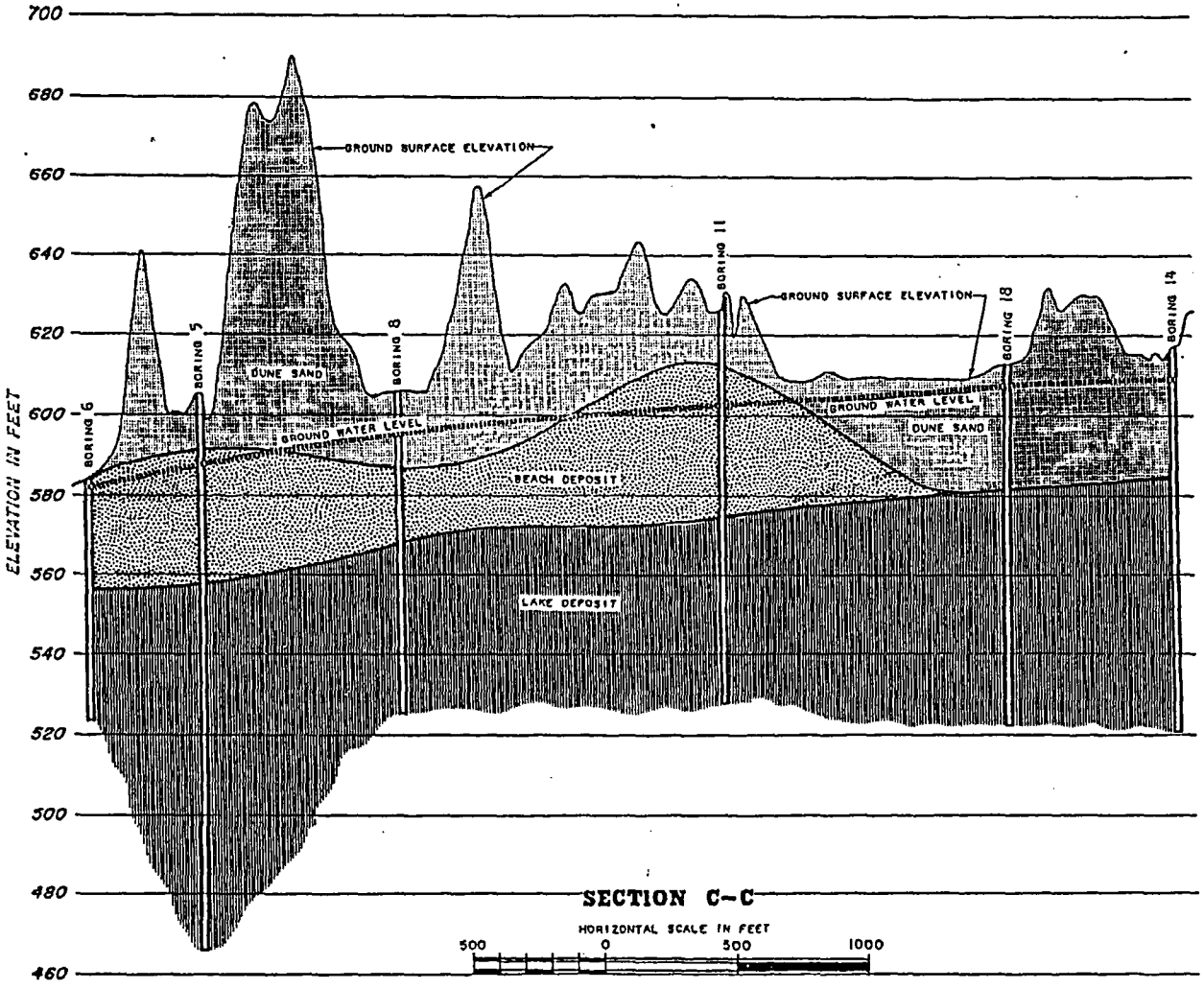

NOTE:
SUBSURFACE CONDITIONS ILLUSTRATED ABOVE WERE OBTAINED BY INTERPOLATION BETWEEN BORINGS. CONSEQUENTLY, VARIATIONS WHICH ARE NOT INDICATED BY THE CROSS-SECTION CAN BE EXPECTED BETWEEN BORING LOCATIONS.

GEOLOGIC CROSS-SECTION

THE TRS POND IS LOCATED AT BORING 8 AND MAINTAINS A WATER ELEVATION OF 615.0

FIGURE 3
DAMES & MOORE

PLATE IIA-10b

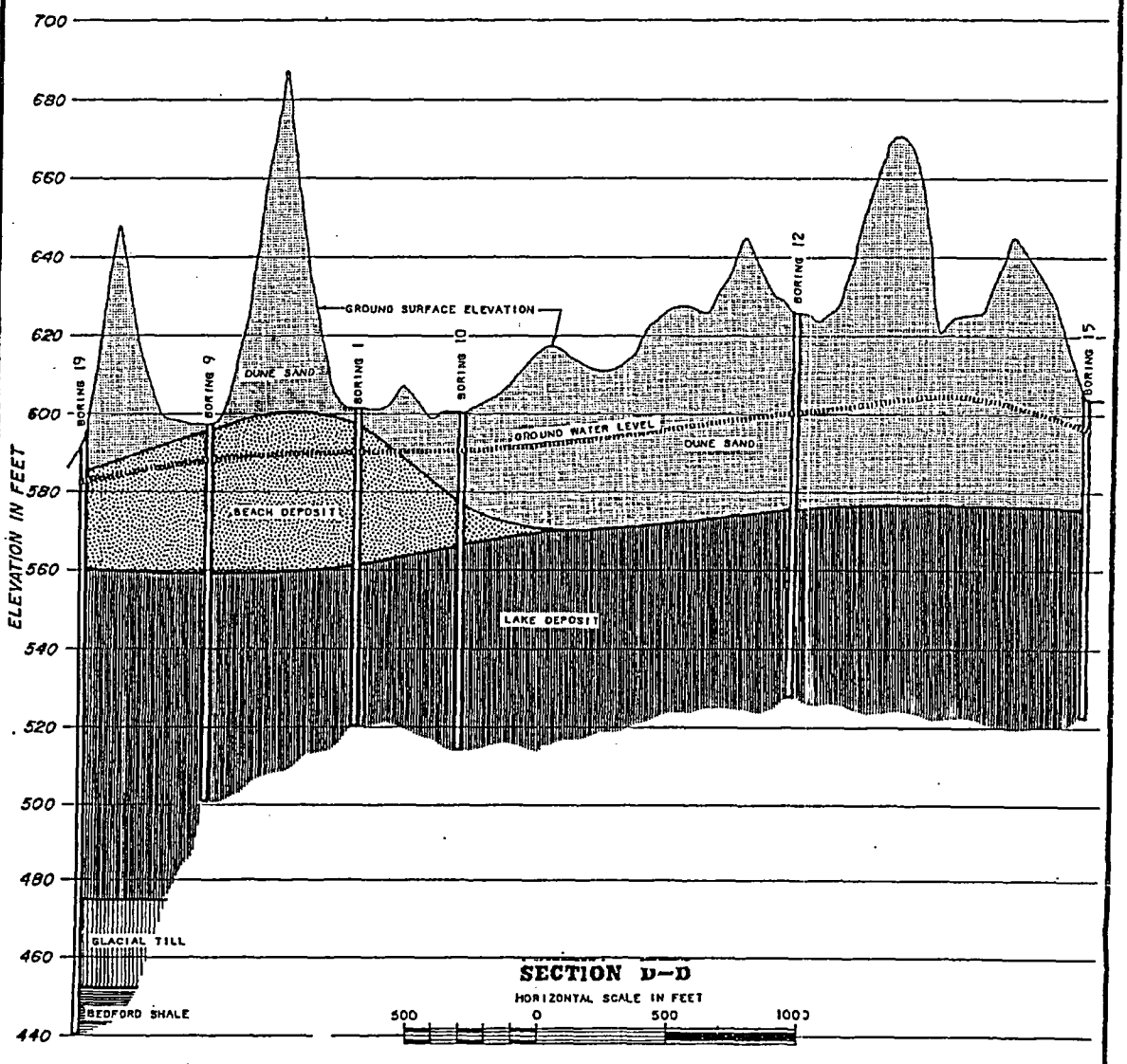

NOTE:

SUBSURFACE CONDITIONS ILLUSTRATED ABOVE WERE OBTAINED BY INTERPOLATION BETWEEN BORINGS. CONSEQUENTLY, VARIATIONS WHICH ARE NOT INDICATED BY THE CROSS-SECTION CAN BE EXPECTED BETWEEN BORING LOCATION.

GEOLOGIC CROSS-SECTION

FIGURE 4

DAMES & MOORE

PLATE IIA-10c

Figure No. 5
Water Table Map

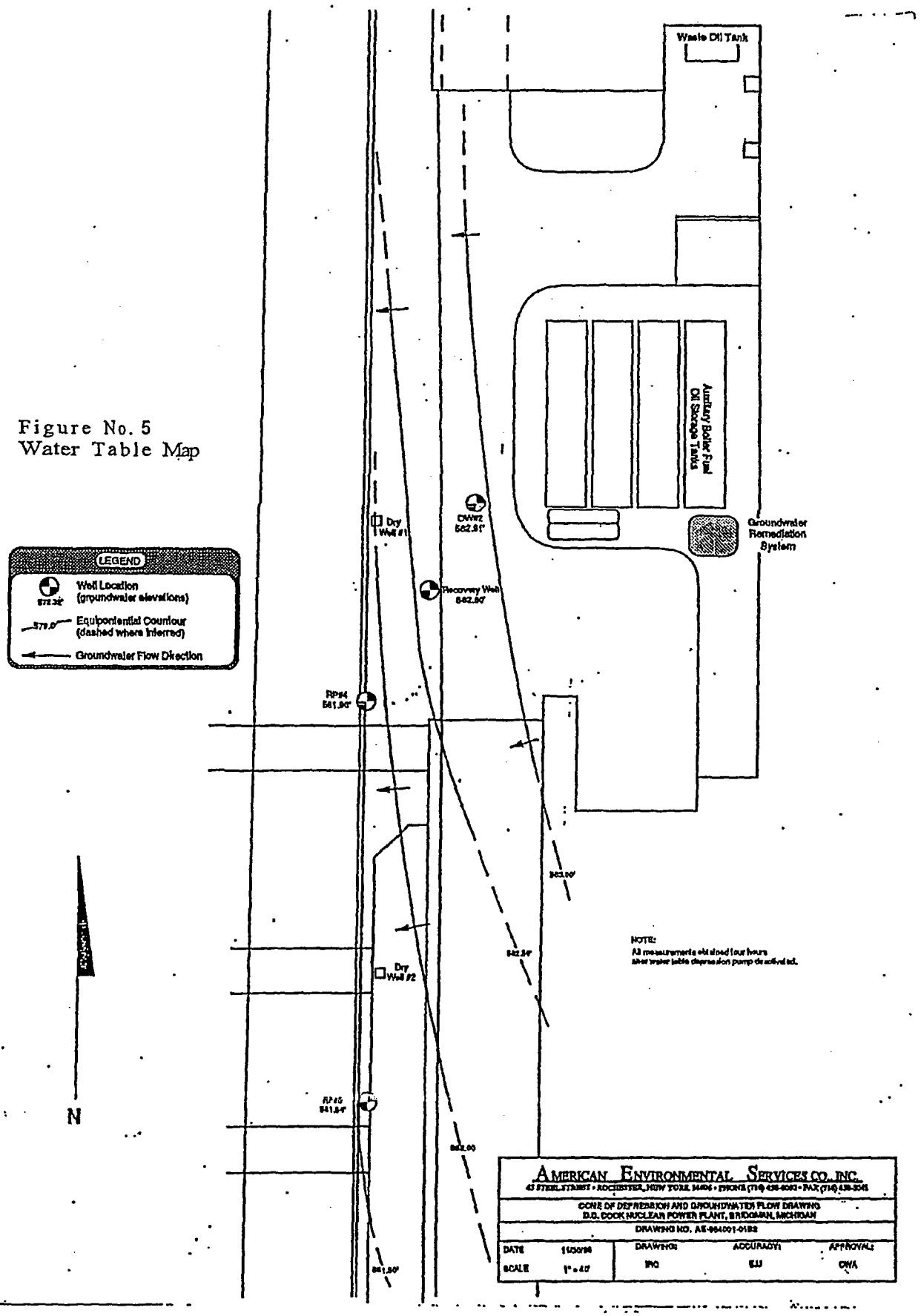

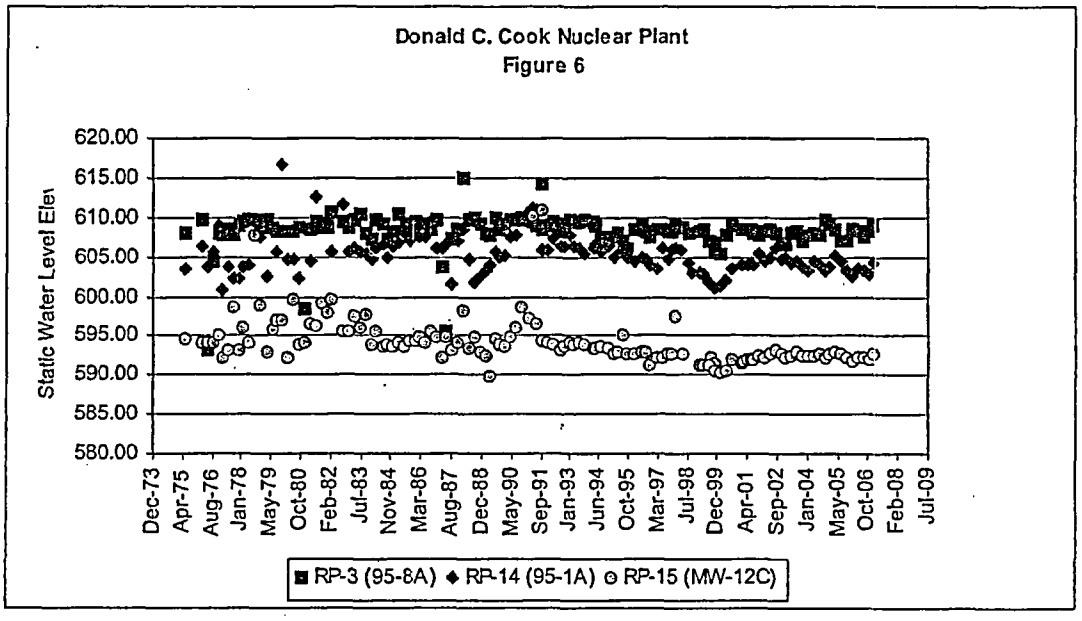
Donald C. Cook Nuclear Plant
Figure 6
Static Water Level Elev
620.00
615.00
610.00
605.00
600.00
595.00
590.00
585.00
580.00
Dec-73
Apr-75
Aug-76
Jan-78
May-79
Oct-80
Feb-82
Jul-83
Nov-84
Mar-86
Aug-87
Dec-88
May-90
Sep-91
Jan-93
Jun-94
Oct-95
Mar-97
Jul-98
Dec-99
Apr-01
Sep-02
Jan-04
May-05
Oct-06
Feb-08
Jul-09
RP-3 (95-8A)
RP-14 (95-1A)
RP-15 (MW-12C)

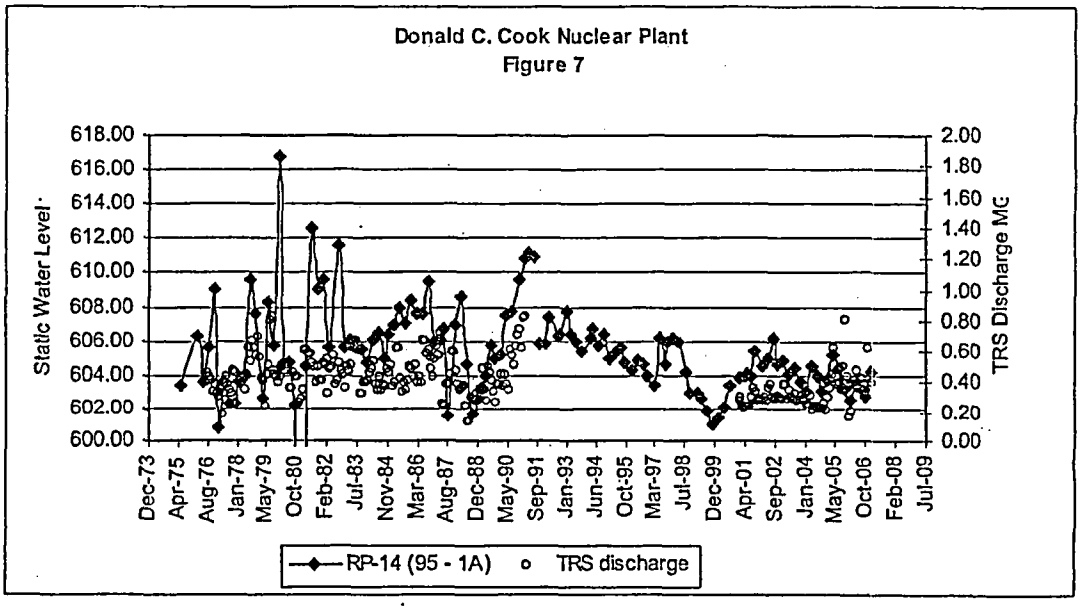
Donald C. Cook Nuclear Plant
Figure 7
Static Water Level
618.00
616.00
614.00
612.00
610.00
608.00
606.00
604.00
602.00
600.00
TRS Discharge MC
2.00
1.80
1.60
1.40
1.20
1.00
0.80
0.60
0.40
0.20
0.00
Dec-73
Apr-75
Aug-76
Jan-78
May-79
Oct-80
Feb-82
Jul-83
Nov-84
Mar-86
Aug-87
Dec-88
May-90
Sep-91
Jan-93
Jun-94
Oct-95
Mar-97
Jul-98
Dec-99
Apr-01
Sep-02
Jan-04
May-05
Oct-06
Feb-08
Jul-09
RP-14 (95 - 1A)
TRS discharge

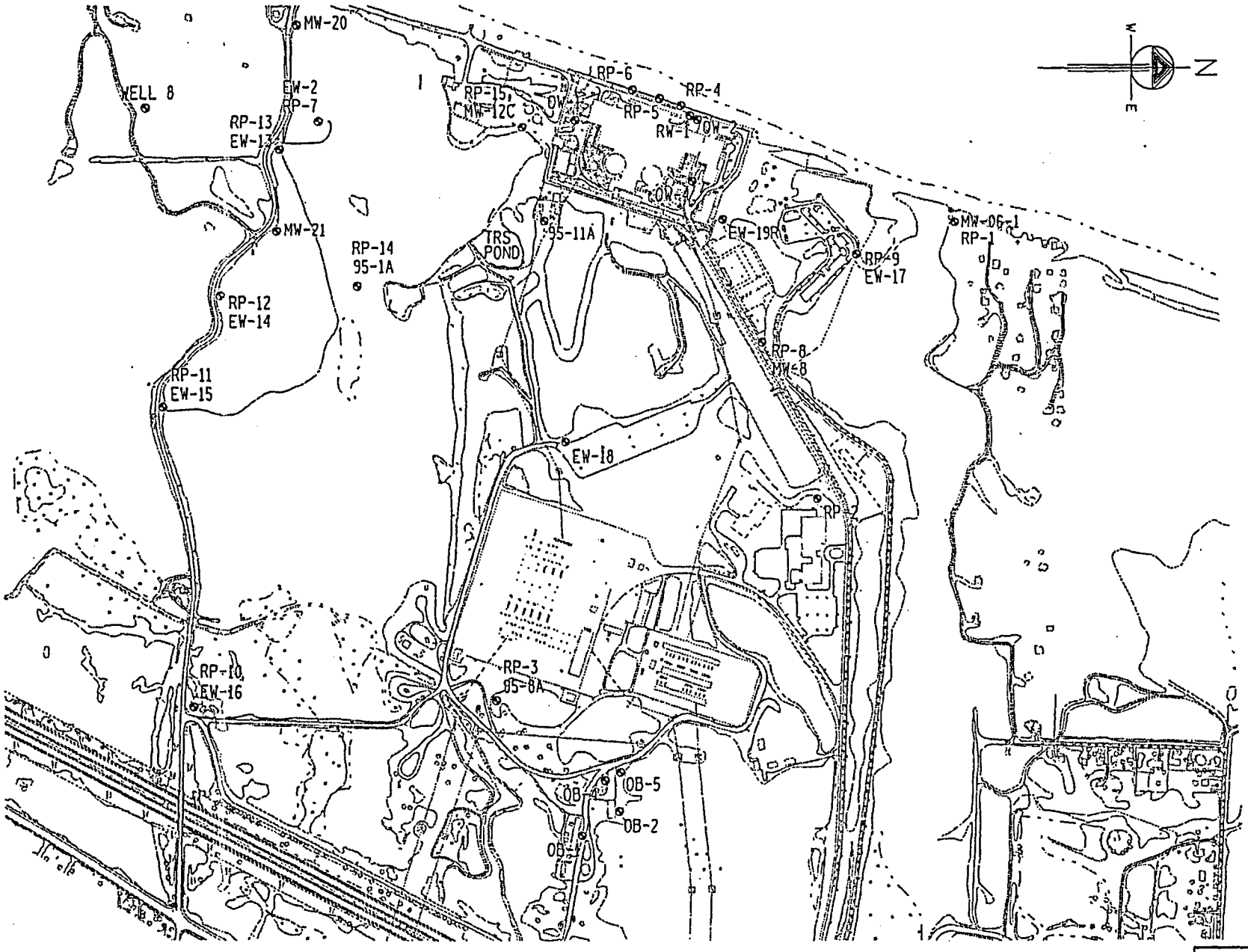

LEGEND

MONITORING WELL

DONALD C. COOK
NUCLEAR PLANT
WELL LOCATION MAP
FIGURE 8

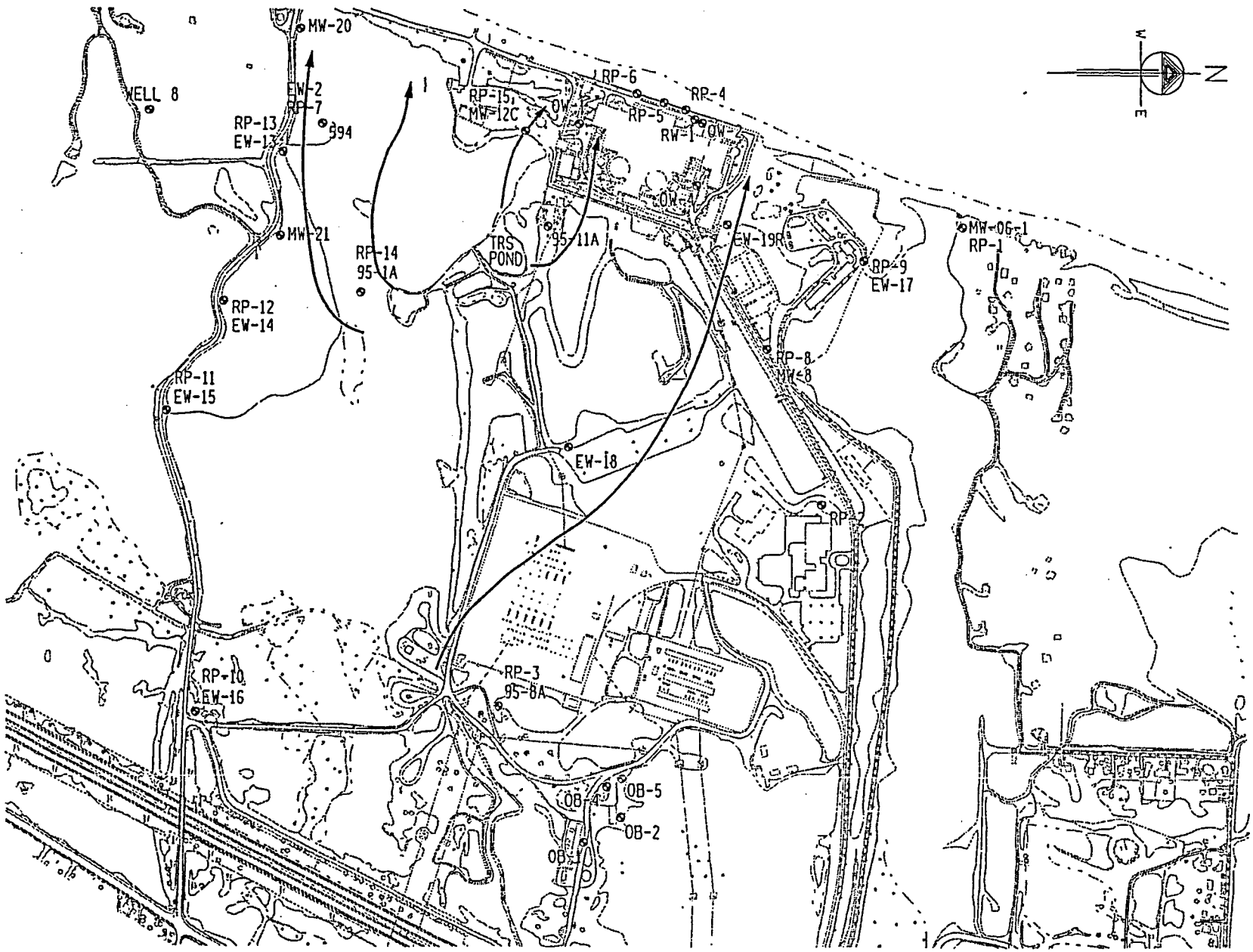

TRS POND DISCHARGE AVERAGE CONCENTRATION IS 9.4 mg/l
CHLORIDE FOR THE MONTH OF JANUARY 2007

LEGEND

MONITORING WELL

DIRECTION OF GROUNDWATER FLOW

38.0 CHLORIDE DISCHARGE (mg/l)

DONALD C. COOK
NUCLEAR PLANT
CHLORIDE ISOPLETH MAP (mg/l)
FIGURE 9

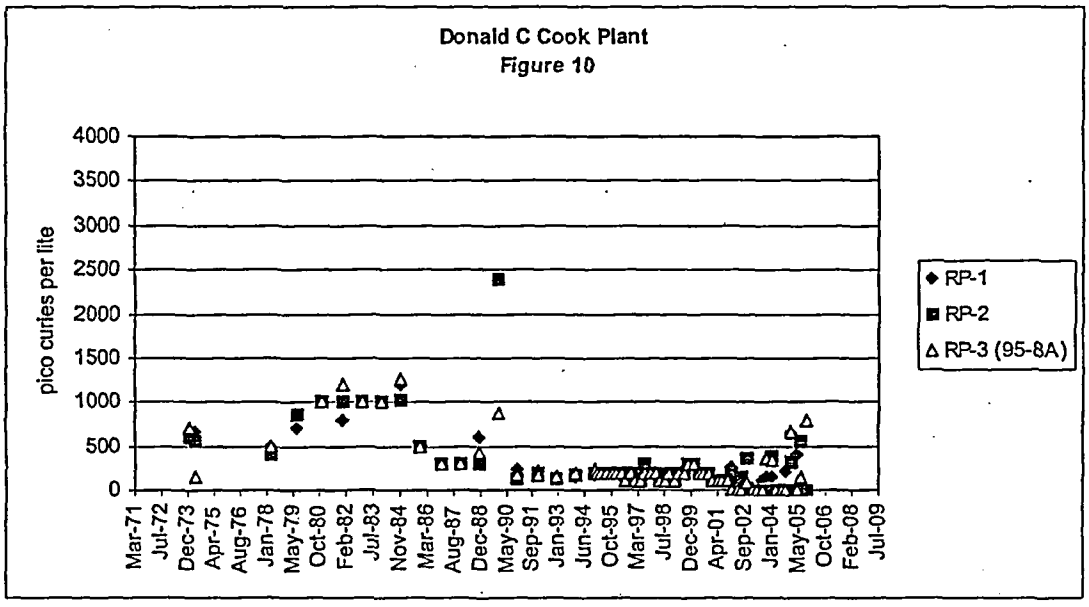
Donald C Cook Plant
Figure 10
pico curies per lite
4000
3500
3000
2500
2000
1500
1000
500
0
Mar-71
Jul-72
Dec-73
Apr-75
Aug-76
Jan-78
May-79
Oct-80
Feb-82
Jul-83
Nov-84
Mar-86
Aug-87
Dec-88
May-90
Sep-91
Jan-93
Jun-94
Oct-95
Mar-97
Jul-98
Dec-99
Apr-01
Sep-02
Jan-04
May-05
Oct-06
Feb-08
Jul-09
RP-1
RP-2
RP-3 (95-8A)

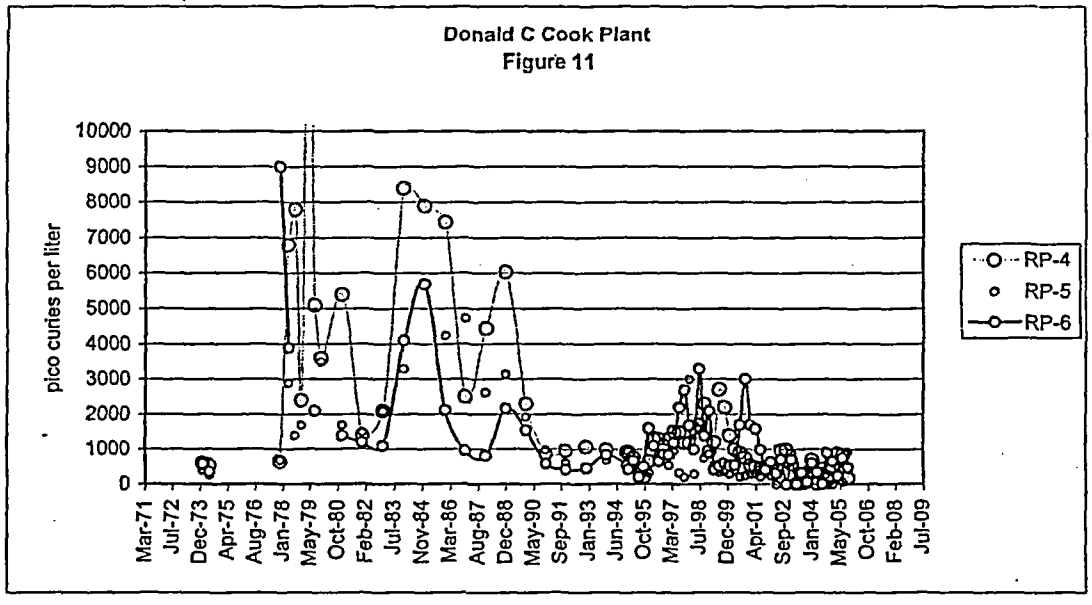
Donald C Cook Plant
Figure 11
pico curies per liter
10000
9000
8000
7000
6000
5000
4000
3000
2000
1000
0
Mar-71
Jul-72
Dec-73
Apr-75
Aug-76
Jan-78
May-79
Oct-80
Feb-82
Jul-83
Nov-84
Mar-86
Aug-87
Dec-88
May-90
Sep-91
Jan-93
Jun-94
Oct-95
Mar-97
Jul-98
Dec-99
Apr-01
Sep-02
Jan-04
May-05
Oct-06
Feb-08
Jul-09
RP-4
RP-5
RP-6

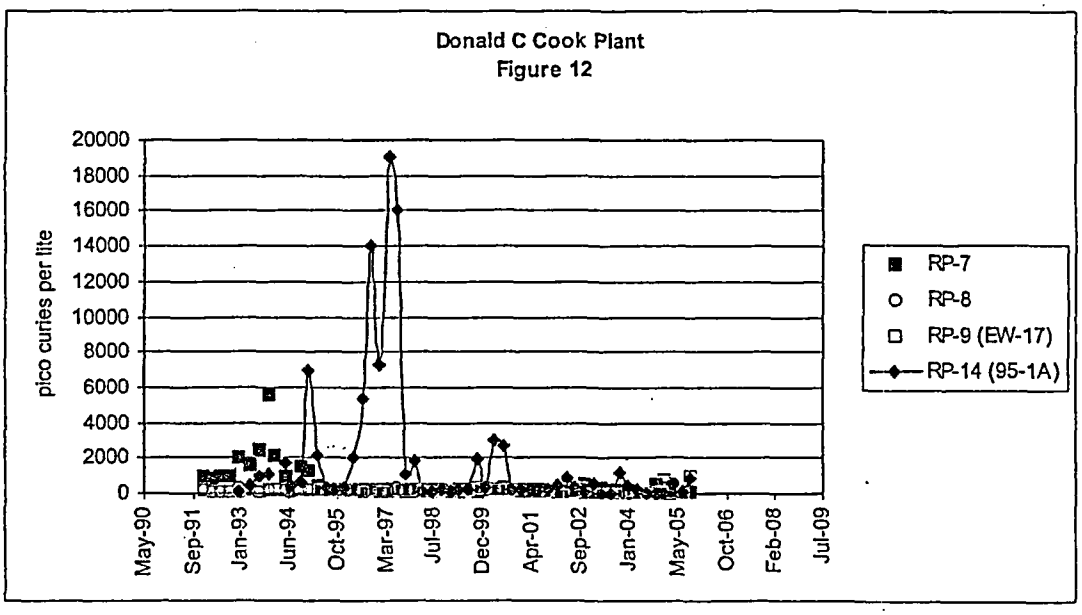
Donald C Cook Plant
Figure 12
pico curies per lite
20000
18000
16000
14000
12000
10000
8000
6000
4000
2000
0
May-90
Sep-91
Jan-93
Jun-94
Oct-95
Mar-97
Jul-98
Dec-99
Apr-01
Sep-02
Jan-04
May-05
Oct-06
Feb-08
Jul-09
RP-7
RP-8
RP-9 (EW-17)
RP-14 (95-1A)

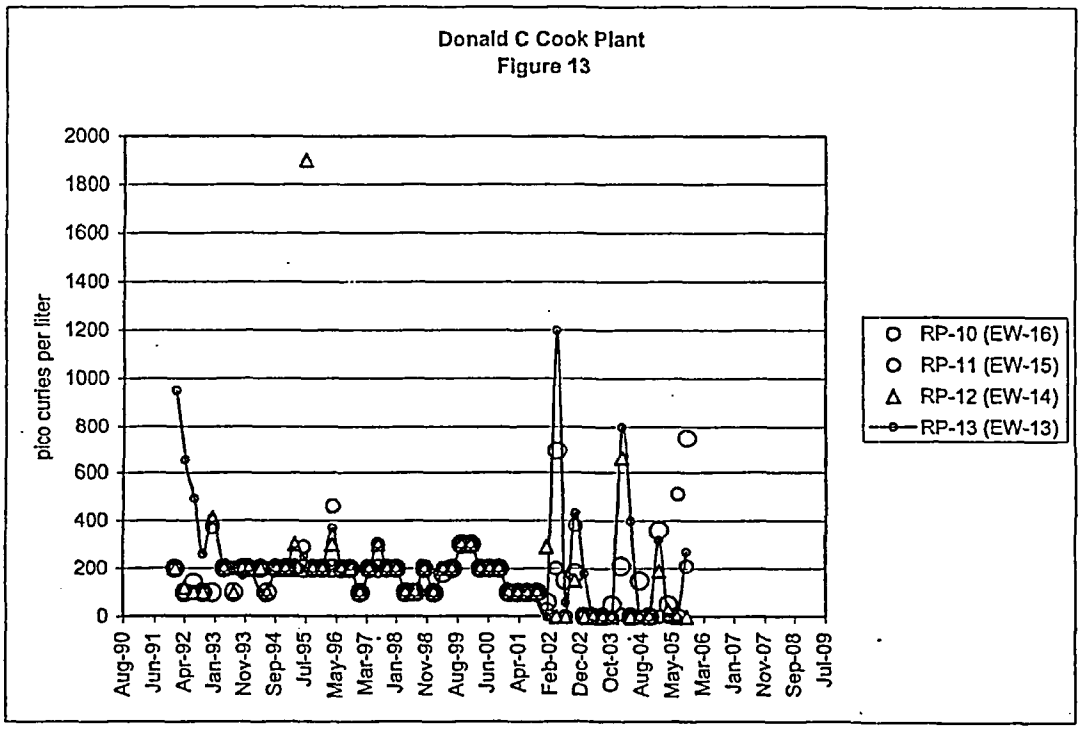
Donald C Cook Plant
Figure 13
pico curies per liter
2000
1800
1600
1400
1200
1000
800
600
400
200
0
Aug-90
Jun-91
Apr-92
Jan-93
Nov-93
Sep-94
Jul-95
May-96
Mar-97
Jan-98
Nov-98
Aug-99
Jun-00
Apr-01
Feb-02
Dec-02
Oct-03
Aug-04
May-05
Mar-06
Jan-07
Nov-07
Sep-08
Jul-09
RP-10 (EW-16)
RP-11 (EW-15)
RP-12 (EW-14)
RP-13 (EW-13)

Michigan Department of Environmental Quality, Water Division
Groundwater Section, Permits & Technical Support Unit

COMPLIANCE MONITORING REPORT FORM

Required by Part 31, Water Resources Protection, of the Natural Resources and Environmental Protection Act, 1994 PA 451, as amended (NREPA)

Facility Name I Indiana Michigan Power Co-Cook Plt	**Facility Name 2** American Electric Power
Facility ID Number 20073.7	**Authorization Number** GW1810102
Jurisdiction: Water Division	
District: Kalamazoo	
Month: Sep **Year:** 2008	

CERTIFICATION STATEMENT:

I certify, under penalty of law, that I have personally examined and am familiar with the information submitted in this document and all attachments. The information being submitted was collected and analyzed according to the approved methods specified in the groundwater discharge permit for this facility. Based on my inquiry of those individuals immediately responsible for obtaining the information, I believe that the information is true, accurate, and complete. I am aware that there are significant penalties for submitting false information, including the possibility of fine and imprisonment

CERTIFIED OPERATOR (PRINT):	CERTIFICATION NUMBER:
Blair K. Zordell	**4537**
CERTIFIED OPERATOR (SIGNATURE):	DATE:
	10/14/2008
PRINCIPAL EXECUTIVE OFFICER (PRINT):	
Jon H. Harner	
PRINCIPAL EXECUTIVE OFFICER (SIGNATURE):	DATE:
Jon H. Harner	10-14-08

EFFLUENT QUALITY

PERMITEE NAME: American Electric Power Company -Donald
MAILING ADDRESS: One Cook Place Bridgman, MI 49106

FACILITY: IN MI Power Co-Cook Plt
LOCATION: 1 Cook Place, Mail Zone 5A Bridgman, MI 49106

PERMIT NUMBER GW1810102
Certified Operator: Blair K. Zordell
Principle Executive Officer: Jon H. Harner
Report Signed On: 10/14/2008
MONITORING PERIOD: FROM: 9/1/2008 TO: 9/30/2008

DISTRICT: Kalamazoo
COUNTY: Berrien

Sample Location	Sampling Frequency	Parameter	Units		Statistical Base Code 1	Statistical Base Code 2	Number of Limit Exceedances
EQ-1	Daily	Flow (Measured)	gallons	Sample Measurement	*****	599600	0
				Permit Requirement	*****	2400000 maximum daily	
EQ-1	Annually	Flow (Calculated)	gallons	Sample Measurement	*****	*G	0
				Permit Requirement	*****	875000000 maximum annual	
EQ-1	Weekly	Chloride	mg/l	Sample Measurement	*****	13.5	0
				Permit Requirement	*****	(report) maximum daily	
EQ-1	Weekdays	Ethanolamine	mg/l	Sample Measurement	*****	15.2	0
				Permit Requirement	*****	(report) maximum daily	
EQ-1	Weekdays	Hydrazine	ug/l	Sample Measurement	*****	877	0
				Permit Requirement	*****	(report) maximum daily	
EQ-1	Weekdays	pH (minimum)	S.U.	Sample Measurement	*****	6.9	0
				Permit Requirement	*****	6.5 minimum daily	
EQ-1	Weekdays	pH (maximum)	S.U.	Sample Measurement	*****	9.0	0
				Permit Requirement	*****	9.0 maximum daily	
EQ-1	Monthly	Total Inorganic Nitrogen	mg/l	Sample Measurement	*****	5.3	0
				Permit Requirement	*****	(report) maximum daily	
EQ-1	Monthly	Ammonia Nitrogen	mg/l	Sample Measurement	*****	4.8	0
				Permit Requirement	*****	(report) maximum daily	

EFFLUENT QUALITY

PERMITEE NAME: American Electric Power Company -Donald
MAILING ADDRESS: One Cook Place Bridgman, MI 49106

FACILITY: IN MI Power Co-Cook Plt
LOCATION: 1 Cook Place, Mail Zone 5A Bridgman, MI 49106

PERMIT NUMBER GW1810102
Certified Operator: Blair K. Zordell
Principle Executive Officer: Jon H. Harner
Report Signed On: 10/14/2008
MONITORING PERIOD: FROM: 9/1/2008 TO: 9/30/2008

DISTRICT: Kalamazoo
COUNTY: Berrien

Sample Location	Sampling Frequency	Parameter	Units		Statistical Base Code 1	Statistical Base Code 2	Number of Limit Exceedences
EQ-1	Monthly	Nitrite Nitrogen	mg/l	Sample Measurement	*****	0.10	0
				Permit Requirement	*****	(report) maximum daily	
EQ-1	Monthly	Nitrate Nitrogen	mg/l	Sample Measurement	*****	0.38	0
				Permit Requirement	*****	(report) maximum daily	
EQ-1	2x monthly	Sodium	mg/l	Sample Measurement	*****	1697	0
				Permit Requirement	*****	(report) maximum daily	
EQ-1	2x monthly	Sulfate	mg/l	Sample Measurement	*****	1756	0
				Permit Requirement	*****	(report) maximum daily	
EQ-2	Daily	Flow (Measured)	gallons	Sample Measurement	*****	26750	0
				Permit Requirement	*****	60000 maximum daily	
EQ-2	Annually	Flow (Calculated)	Gallons	Sample Measurement	*****	*G	0
				Permit Requirement	*****	21900000 annual maximum	
EQ-2	Weekly	Biochemical Oxygen Demand (BOD5)	mg/l	Sample Measurement	*****	4.26	0
				Permit Requirement	*****	35 maximum daily	
EQ-2	Weekly	Chloride	mg/l	Sample Measurement	*****	142.0	0
				Permit Requirement	*****	(report) maximum daily	
EQ-2	Weekly	Dissolved Oxygen	mg/l	Sample Measurement	*****	4.9	0
				Permit Requirement	*****	(report) maximum daily	

EFFLUENT QUALITY

PERMITEE NAME: American Electric Power Company -Donald
MAILING ADDRESS: One Cook Place Bridgman, MI 49106

FACILITY: IN MI Power Co-Cook Plt
LOCATION: 1 Cook Place, Mail Zone 5A Bridgman, MI 49106

PERMIT NUMBER GW1810102
Certified Operator: Blair K. Zordell
Principle Executive Officer: Jon H. Harner
Report Signed On: 10/14/2008
MONITORING PERIOD: FROM: 9/1/2008

DISTRICT: Kalamazoo
COUNTY: Berrien

TO: 9/30/2008

Sample Location	Sampling Frequency	Parameter	Units		Statistical Base Code 1	Statistical Base Code 2	Number of Limit Exceedences
EQ-2	Weekly	Total Phosphorus	mg/l	Sample Measurement	*****	2.50	0
				Permit Requirement	*****	15 maximum daily	
EQ-2	Weekly	pH (minimum)	S.U.	Sample Measurement	*****	7.1	0
				Permit Requirement	*****	6.0 minimum daily	
EQ-2	Weekly	pH (maximum)	S.U.	Sample Measurement	*****	7.5	0
				Permit Requirement	*****	9.0 maximum daily	
EQ-2	Weekly	Sodium	mg/l	Sample Measurement	*****	39.4	0
				Permit Requirement	*****	(report) maximum daily	
EQ-2	Weekly	Total Inorganic Nitrogen	mg/l	Sample Measurement	*****	20.1	0
				Permit Requirement	*****	(report) maximum daily	
EQ-2	Weekly	Ammonia Nitrogen	mg/l	Sample Measurement	*****	10.4	0
				Permit Requirement	*****	(report) maximum daily	
EQ-2	Weekly	Nitrite Nitrogen	mg/l	Sample Measurement	*****	0.04	0
				Permit Requirement	*****	(report) maximum daily	
EQ-2	Weekly	Nitrate Nitrogen	mg/l	Sample Measurement	*****	17.6	0
				Permit Requirement	*****	(report) maximum daily	
				Sample Measurement	*****		
				Permit Requirement			

Land Application

PERMITEE NAME: American Electric Power Company -Donald
MAILING ADDRESS: One Cook Place Bridgman, MI 49106

FACILITY: IN MI Power Co-Cook Plt
LOCATION: 1 Cook Place, Mail Zone 5A Bridgman, MI 49106

PERMIT NUMBER GW1810102
Certified Operator: Blair K. Zordell
Principle Executive Officer: Jon H. Harner
Report Signed On: 10/14/2008
MONITORING PERIOD: FROM: 9/1/2008 TO: 9/30/2008

DISTRICT: Kalamazoo
COUNTY: Berrien

Sample Location	Sampling Frequency	Parameter	Units		Statistical Base Code 1	Statistical Base Code 2	No. Ex.
LA-1 Outfall OOD	Daily	Application Rate	gallons/day/sqft	Sample Measurement	*****	6	0
				Permit Requirement	*****	26 maximum daily	
LA-2 Outfall OOE Basin A	Daily	Application Rate	gallons/day/sqft	Sample Measurement	*****	3	0
				Permit Requirement	*****	maximum daily	
LA-3 Outfall OOE Basin B	Daily	Application Rate	gallons/day/sqft	Sample Measurement	*****	8	0
				Permit Requirement	*****	28 maximum daily	
				Sample Measurement			
				Permit Requirement			
				Permit Requirement			
				Sample Measurement			
				Permit Requirement			
				Sample Measurement			
				Permit Requirement			
				Sample Measurement			
				Permit Requirement			
				Sample Measurement			
				Permit Requirement			

Michigan Department of Environmental Quality, Water Division
Groundwater Section, Permits & Technical Support Unit

COMPLIANCE MONITORING REPORT FORM

Required by Part 31, Water Resources Protection, of the Natural Resources and Environmental Protection Act, 1994 PA 451, as amended (NREPA)

Facility Name I Indiana Michigan Power Co-Cook Plt	**Facility Name 2** American Electric Power
Facility ID Number 20073.7	**Authorization Number** GW1810102
Jurisdiction: Water Division	
District: Kalamazoo	
Month: Jul **Year:** 2008	

CERTIFICATION STATEMENT:

I certify, under penalty of law, that I have personally examined and am familiar with the information submitted in this document and all attachments. The information being submitted was collected and analyzed according to the approved methods specified in the groundwater discharge permit for this facility. Based on my inquiry of those individuals immediately responsible for obtaining the information, I believe that the information is true, accurate, and complete. I am aware that there are significant penalties for submitting false information, including the possibility of fine and imprisonment

CERTIFIED OPERATOR (PRINT): **Blair K. Zordell**	CERTIFICATION NUMBER: **4537**
CERTIFIED OPERATOR (SIGNATURE):	DATE: 8/13/2008
PRINCIPAL EXECUTIVE OFFICER (PRINT): **Jon H. Harner**	
PRINCIPAL EXECUTIVE OFFICER (SIGNATURE): Doug Foster for Jon Harner	DATE: 8/14/08

EQP5300
10/99

EFFLUENT QUALITY

PERMITEE NAME: American Electric Power Company -Donald
MAILING ADDRESS: One Cook Place Bridgman, MI 49106

FACILITY: IN MI Power Co-Cook Plt
LOCATION: 1 Cook Place, Mail Zone 5A Bridgman, MI 49106

PERMIT NUMBER GW1810102
Certified Operator: Blair K. Zordell
Principle Executive Officer: Jon H. Harner
Report Signed On: 8/14/2008
MONITORING PERIOD: FROM: 7/1/2008 TO: 7/31/2008

DISTRICT: Kalamazoo
COUNTY: Berrien

Sample Location	Sampling Frequency	Parameter	Units		Statistical Base Code 1	Statistical Base Code 2	Number of Limit Exceedances
EQ-1	Daily	Flow (Measured)	gallons	Sample Measurement	*****	726916	0
				Permit Requirement		2400000 maximum daily	
EQ-1	Annually	Flow (Calculated)	gallons	Sample Measurement	*****	*G	0
				Permit Requirement		876000000 maximum annual	
EQ-1	Weekly	Chloride	mg/l	Sample Measurement	*****	12.0	0
				Permit Requirement		(report) maximum daily	
EQ-1	Weekdays	Ethanolamine	mg/l	Sample Measurement	*****	1.7	0
				Permit Requirement		(report) maximum daily	
EQ-1	Weekdays	Hydrazine	ug/l	Sample Measurement	*****	5.9	0
				Permit Requirement		(report) maximum daily	
EQ-1	Weekdays	pH (minimum)	S.U.	Sample Measurement	*****	7.0	0
				Permit Requirement		6.5 maximum daily	
EQ-1	Weekdays	pH (maximum)	S.U.	Sample Measurement	*****	8.9	0
				Permit Requirement		9.0 maximum daily	
EQ-1	Monthly	Total Inorganic Nitrogen	mg/l	Sample Measurement	*****	6.1	0
				Permit Requirement		(report) maximum daily	
EQ-1	Monthly	Ammonia Nitrogen	mg/l	Sample Measurement	*****	6.1	0
				Permit Requirement		(report) maximum daily	

EFFLUENT QUALITY

PERMITEE NAME: American Electric Power Company -Donald
MAILING ADDRESS: One Cook Place Bridgman, MI 49106

FACILITY: IN MI Power Co-Cook Plt
LOCATION: 1 Cook Place, Mail Zone 5A Bridgman, MI 49106

PERMIT NUMBER GW1810102
Certified Operator: Blair K. Zordell
Principle Executive Officer: Jon H. Harner
Report Signed On: 8/14/2008
MONITORING PERIOD: FROM: 7/1/2008 TO: 7/31/2008

DISTRICT: Kalamazoo
COUNTY: Berrien

Sample Location	Sampling Frequency	Parameter	Units		Statistical Base Code 1	Statistical Base Code 2	Number of Limit Exceedences
EQ-1	Monthly	Nitrite Nitrogen	mg/l	Sample Measurement	*****	<0.05	0
				Permit Requirement	*****	(report) maximum daily	
EQ-1	Monthly	Nitrate Nitrogen	mg/l	Sample Measurement	*****	<0.10	0
				Permit Requirement	*****	(report) maximum daily	
EQ-1	2x monthly	Sodium	mg/l	Sample Measurement	*****	1460	0
				Permit Requirement	*****	(report) maximum daily	
EQ-1	2x monthly	Sulfate	mg/l	Sample Measurement	*****	2500	0
				Permit Requirement	*****	(report) maximum daily	
EQ-2	Daily	Flow (Measured)	gallons	Sample Measurement	*****	27260	0
				Permit Requirement	*****	60000 maximum daily	
EQ-2	Annually	Flow (Calculated)	Gallons	Sample Measurement	*****	*G	0
				Permit Requirement	*****	21900000 annual maximum	
EQ-2	Weekly	Biochemical Oxygen Demand (BOD5)	mg/l	Sample Measurement	*****	3.60	0
				Permit Requirement	*****	85.0 maximum daily	
EQ-2	Weekly	Chloride	mg/l	Sample Measurement	*****	126.0	0
				Permit Requirement	*****	(report) maximum daily	
EQ-2	Weekly	Dissolved Oxygen	mg/l	Sample Measurement	*****	5.8	0
				Permit Requirement	*****	(report) maximum daily	

EFFLUENT QUALITY

PERMITEE NAME: American Electric Power Company -Donald
MAILING ADDRESS: One Cook Place Bridgman, MI 49106

FACILITY: IN MI Power Co-Cook Plt
LOCATION: 1 Cook Place, Mail Zone 5A Bridgman, MI 49106

PERMIT NUMBER GW1810102
Certified Operator: Blair K. Zordell
Principle Executive Officer: Jon H. Harner
Report Signed On: 8/14/2008
MONITORING PERIOD: FROM: 7/1/2008 TO: 7/31/2008

DISTRICT: Kalamazoo
COUNTY: Berrien

Sample Location	Sampling Frequency	Parameter	Units		Statistical Base Code 1	Statistical Base Code 2	Number of Limit Exceedences
EQ-2	Weekly	Total Phosphorus	mg/l	Sample Measurement	*****	1.75	0
				Permit Requirement		maximum daily	
EQ-2	Weekly	pH (minimum)	S.U.	Sample Measurement	*****	7.2	0
				Permit Requirement		minimum daily	
EQ-2	Weekly	pH (maximum)	S.U.	Sample Measurement	*****	7.5	0
				Permit Requirement		maximum daily	
EQ-2	Weekly	Sodium	mg/l	Sample Measurement	*****	34.2	0
				Permit Requirement		(report) maximum daily	
EQ-2	Weekly	Total Inorganic Nitrogen	mg/l	Sample Measurement	*****	20.0	0
				Permit Requirement		(report) maximum daily	
EQ-2	Weekly	Ammonia Nitrogen	mg/l	Sample Measurement	*****	0.30	0
				Permit Requirement		(report) maximum daily	
EQ-2	Weekly	Nitrite Nitrogen	mg/l	Sample Measurement	*****	0.04	0
				Permit Requirement		(report) maximum daily	
EQ-2	Weekly	Nitrate Nitrogen	mg/l	Sample Measurement	*****	20.0	0
				Permit Requirement		(report) maximum daily	
				Sample Measurement	*****		
				Permit Requirement			

Land Application

PERMITEE NAME: American Electric Power Company -Donald
MAILING ADDRESS: One Cook Place Bridgman, MI 49106

FACILITY: IN MI Power Co-Cook Plt
LOCATION: 1 Cook Place, Mail Zone 5A Bridgman, MI 49106

PERMIT NUMBER GW1810102
Certified Operator: Blair K. Zordell
Principle Executive Officer: Jon H. Harner
Report Signed On: 8/14/2008
MONITORING PERIOD: FROM: 7/1/2008 TO: 7/31/2008

DISTRICT: Kalamazoo
COUNTY: Berrien

Sample Location	Sampling Frequency	Parameter	Units		Statistical Base Code 1	Statistical Base Code 2	No. Ex.
LA-1 Outfall OOD	Daily	Application Rate	gallons/day/sqft	Sample Measurement	*****	8	0
				Permit Requirement		maximum daily	
LA-2 Outfall OOE Basin A	Daily	Application Rate	gallons/day/sqft	Sample Measurement	*****	*G	0
				Permit Requirement		maximum daily	
LA-3 Outfall OOE Basin B	Daily	Application Rate	gallons/day/sqft	Sample Measurement	*****	8	0
				Permit Requirement		maximum daily	
				Sample Measurement			
				Permit Requirement			
				Permit Requirement			
				Sample Measurement			
				Permit Requirement			
				Sample Measurement			
				Permit Requirement			
				Sample Measurement			
				Permit Requirement			
				Sample Measurement			
				Permit Requirement			

Groundwater Quality

PERMITEE NAME: American Electric Power Company -Donald
MAILING ADDRESS: One Cook Place Bridgman, MI 49106

FACILITY: IN MI Power Co-Cook Plt
LOCATION: 1 Cook Place, Mail Zone 5A Bridgman, MI 49106

PERMIT NUMBER GW1810102
Certified Operator: Blair K. Zordell
Principle Executive Officer: Jon H. Harner
Report Signed On: 8/14/2008
MONITORING PERIOD: FROM: 7/1/2008 TO: 7/31/2008

DISTRICT: Kalamazoo
COUNTY: Berrien

Parameter	Units	Sampling Frequency		EW-12	EW-13	EW-19	EW-1A	EW-8 (U.G.)	EW-16 (U.G.)
Static Water Elevation	USGS feet	Quarterly	Sample Measurement	593.38	600.03	592.54	605.45	608.41	613.38
			Permit Requirement	(report) maximum daily	(report) maximum daily	(report) maximum daily	(report) maximum daily	(report) maximum daily	(report) maximum daily
pH (Maximum)	S.U.	Quarterly	Sample Measurement	8.0	7.2	7.5	7.4	6.8	7.1
			Permit Requirement	9.0 maximum daily	9.0 maximum daily	9.0 maximum daily	9.0 maximum daily	(report) maximum daily	(report) maximum daily
pH (minimum)	S.U.	Quarterly	Sample Measurement	8.0	7.2	7.5	7.4	6.8	7.1
			Permit Requirement	6.0 minimum daily	6.0 minimum daily	6.0 minimum daily	6.0 minimum daily	(report) maximum daily	(report) maximum daily
Chloride	mg/l	Quarterly	Sample Measurement	12.5	56.8	49.1	12.5	119	86.8
			Permit Requirement	250 maximum daily	250 maximum daily	250 maximum daily	250 maximum daily	(report) maximum daily	(report) maximum daily
Specific Conductance	umhos/cm3	Quarterly	Sample Measurement	730	565	552	515	672	613
			Permit Requirement	(report) maximum daily	(report) maximum daily	(report) maximum daily	(report) maximum daily	(report) maximum daily	(report) maximum daily
Total Inorganic Nitrogen	mg/l	Quarterly	Sample Measurement	0.30	0.33	0.52	2.86	0.12	0.17
			Permit Requirement	5 maximum daily	5 maximum daily	5 maximum daily	5 maximum daily	(report) maximum daily	(report) maximum daily
Ammonia Nitrogen	mg/l	Quarterly	Sample Measurement	0.30	0.33	0.38	<0.05	<0.05	<0.05
			Permit Requirement	(report) maximum daily	(report) maximum daily	(report) maximum daily	(report) maximum daily	(report) maximum daily	(report) maximum daily
Nitrite Nitrogen	mg/l	Quarterly	Sample Measurement	<0.05	<0.05	0.14	<0.05	<0.05	<0.05
			Permit Requirement	0.5 maximum daily	0.5 maximum daily	0.5 maximum daily	0.5 maximum daily	(report) maximum daily	(report) maximum daily
Nitrate Nitrogen	mg/l	Quarterly	Sample Measurement	<0.10	<0.10	<0.10	2.86	0.12	0.17
			Permit Requirement	(report) maximum daily	(report) maximum daily	(report) maximum daily	(report) maximum daily	(report) maximum daily	(report) maximum daily

Groundwater Quality

PERMITEE NAME: American Electric Power Company -Donald
MAILING ADDRESS: One Cook Place Bridgman, MI 49106

FACILITY: IN MI Power Co-Cook Plt
LOCATION: 1 Cook Place, Mail Zone 5A Bridgman, MI 49106

PERMIT NUMBER GW1810102
Certified Operator: Blair K. Zordell
Principle Executive Officer: Jon H. Harner
Report Signed On: 8/14/2008
MONITORING PERIOD: FROM: 7/1/2008 TO: 7/31/2008

DISTRICT: Kalamazoo
COUNTY: Berrien

Parameter	Units	Sampling Frequency		EW-12	EW-13	EW-19	EW-1A	EW-8 (U.G.)	EW-16 (U.G.)
Total Phosphorus	mg/l	Quarterly	Sample Measurement	0.6	0.6	0.5	0.7	0.6	0.6
			Permit Requirement	(report) maximum daily	(report) maximum daily	(report) maximum daily	(report) maximum daily	(report) maximum daily	(report) maximum daily
Sulfate	mg/l	Quarterly	Sample Measurement	222	31.9	52.4	132	34.1	22.5
			Permit Requirement	250 maximum daily	250 maximum daily	250 maximum daily	250 maximum daily	(report) maximum daily	(report) maximum daily
Dissolved Sodium	mg/l	Quarterly	Sample Measurement	97.5	32.2	32.0	65.9	83.7	53.5
			Permit Requirement	120 maximum daily	120 maximum daily	120 maximum daily	120 maximum daily	(report) maximum daily	(report) maximum daily
Total Dissolved Solids	mg/l	Quarterly	Sample Measurement	486	346	347	318	485	370
			Permit Requirement	(report) maximum daily	(report) maximum daily	(report) maximum daily	(report) maximum daily	(report) maximum daily	(report) maximum daily
Total Alkalinity	mg/l	Annually	Sample Measurement	138	177	172	87	195	184
			Permit Requirement	(report) maximum daily	(report) maximum daily	(report) maximum daily	(report) maximum daily	(report) maximum daily	(report) maximum daily
Bicarbonate	mg/l	Annually	Sample Measurement	137	177	172	84	195	184
			Permit Requirement	(report) maximum daily	(report) maximum daily	(report) maximum daily	(report) maximum daily	(report) maximum daily	(report) maximum daily
Dissolved Calcium	mg/l	Annually	Sample Measurement	42.5	56.8	57.2	25.1	66.0	50.0
			Permit Requirement	(report) maximum daily	(report) maximum daily	(report) maximum daily	(report) maximum daily	(report) maximum daily	(report) maximum daily
Dissolved Iron	mg/l	Annually	Sample Measurement	0.42	4.12	1.94	<0.02	0.20	<0.02
			Permit Requirement	(report) maximum daily	(report) maximum daily	(report) maximum daily	(report) maximum daily	(report) maximum daily	(report) maximum daily
Dissolved Magnesium	mg/l	Annually	Sample Measurement	15.0	17.1	17.9	9.95	20.5	17.5
			Permit Requirement	200 maximum daily	200 maximum daily	200 maximum daily	200 maximum daily	(report) maximum daily	(report) maximum daily

Groundwater Quality

PERMITEE NAME: American Electric Power Company -Donald
MAILING ADDRESS: One Cook Place Bridgman, MI 49106

FACILITY: IN MI Power Co-Cook Plt
LOCATION: 1 Cook Place, Mail Zone 5A Bridgman, MI 49106

PERMIT NUMBER GW1810102
Certified Operator: Blair K. Zordell
Principle Executive Officer: Jon H. Harner
Report Signed On: 8/14/2008
MONITORING PERIOD: FROM: 7/1/2008 TO: 7/31/2008

DISTRICT: Kalamazoo
COUNTY: Berrien

Parameter	Units	Sampling Frequency		EW-12	EW-13	EW-19	EW-1A	EW-8 (U.G.)	EW-16 (U.G.)
Dissolved Oxygen	mg/l	Annually	Sample Measurement	1.5	0.9	1.5	3.6	1.0	0.9
			Permit Requirement	(report) maximum daily	(report) maximum daily	(report) maximum daily	(report) maximum daily	(report) maximum daily	(report) maximum daily
Dissolved Potassium	mg/l	Annually	Sample Measurement	1.7	2.2	1.7	1.1	3.8	2.0
			Permit Requirement	(report) maximum daily	(report) maximum daily	(report) maximum daily	(report) maximum daily	(report) maximum daily	(report) maximum daily
Total Organic Carbon	mg/l	Annually	Sample Measurement	1.44	5.65	3.38	1.00	6.62	3.23
			Permit Requirement	(report) maximum daily	(report) maximum daily	(report) maximum daily	(report) maximum daily	(report) maximum daily	(report) maximum daily
Phenol	mg/l	Annually	Sample Measurement	0.424	<0.006	0.351	<0.006	<0.006	<0.006
			Permit Requirement	(report) maximum daily	(report) maximum daily	(report) maximum daily	(report) maximum daily	(report) maximum daily	(report) maximum daily
Ethanolamine	mg/l	Annually	Sample Measurement	<0.7	<0.7	<0.7	<0.7	<0.7	<0.7
			Permit Requirement	2 maximum daily	2 maximum daily	2 maximum daily	2 maximum daily	(report) maximum daily	(report) maximum daily
Dissolved Aluminum	ug/l	Annually	Sample Measurement	<20	<20	<20	<20	<20	<20
			Permit Requirement	150 maximum daily	150 maximum daily	150 maximum daily	150 maximum daily	(report) maximum daily	(report) maximum daily
Dissolved Barium	ug/l	Annually	Sample Measurement	28.1	28.2	23.7	16.0	23.9	21.9
			Permit Requirement	440 maximum daily	440 maximum daily	440 maximum daily	440 maximum daily	(report) maximum daily	(report) maximum daily
Dissoved Boron	ug/l	Annually	Sample Measurement	80	70	60	30	50	30
			Permit Requirement	1900 maximum daily	1900 maximum daily	1900 maximum daily	1900 maximum daily	(report) maximum daily	(report) maximum daily
Dissolved Cadmium	ug/l	Annually	Sample Measurement	<1	<1	<1	<1	<1	<1
			Permit Requirement	2 maximum daily	2 maximum daily	2 maximum daily	2 maximum daily	(report) maximum daily	(report) maximum daily

Groundwater Quality

PERMITEE NAME: American Electric Power Company -Donald
MAILING ADDRESS: One Cook Place Bridgman, MI 49106

FACILITY: IN MI Power Co-Cook Plt
LOCATION: 1 Cook Place, Mail Zone 5A Bridgman, MI 49106

PERMIT NUMBER GW1810102
Certified Operator: Blair K. Zordell
Principle Executive Officer: Jon H. Harner
Report Signed On: 8/14/2008
MONITORING PERIOD: FROM: 7/1/2008 TO: 7/31/2008

DISTRICT: Kalamazoo
COUNTY: Berrien

Parameter	Units	Sampling Frequency		EW-12	EW-13	EW-19	EW-1A	EW-8 (U.G.)	EW-16 (U.G.)
Dissolved Chromium	ug/l	Annually	Sample Measurement	<2	<2	<2	<2	<2	<2
			Permit Requirement	11 maximum daily	11 maximum daily	11 maximum daily	11 maximum daily	(report) maximum daily	(report) maximum daily
Dissolved Copper	ug/l	Annually	Sample Measurement	<0.05	<0.05	<0.05	0.5	0.4	0.6
			Permit Requirement	9 maximum daily	9 maximum daily	9 maximum daily	9 maximum daily	(report) maximum daily	(report) maximum daily
Dissolved Lead	ug/l	Annually	Sample Measurement	<0.05	<0.05	<0.05	<0.05	0.24	<0.05
			Permit Requirement	10 maximum daily	10 maximum daily	10 maximum daily	10 maximum daily	(report) maximum daily	(report) maximum daily
Dissolved Manganese	ug/l	Annually	Sample Measurement	120	105	78	<1	66	4
			Permit Requirement	530 maximum daily	530 maximum daily	530 maximum daily	530 maximum daily	(report) maximum daily	(report) maximum daily
Dissolved Inorganic Mercury	ug/l	Annually	Sample Measurement	<0.0005	<0.0005	<0.0005	<0.0005	0.0028	0.0011
			Permit Requirement	0.0013 maximum daily	0.0013 maximum daily	0.0013 maximum daily	0.0013 maximum daily	(report) maximum daily	(report) maximum daily
Dissolved Nickel	ug/l	Annually	Sample Measurement	0.3	0.4	0.4	0.4	2.2	1.2
			Permit Requirement	52 maximum daily	52 maximum daily	52 maximum daily	52 maximum daily	(report) maximum daily	(report) maximum daily
Dissolved Selenium	ug/l	Annually	Sample Measurement	<0.5	<0.5	<0.5	<0.5	<0.5	<0.5
			Permit Requirement	5 maximum daily	5 maximum daily	5 maximum daily	5 maximum daily	(report) maximum daily	(report) maximum daily
Dissolved Silver	ug/l	Annually	Sample Measurement	<0.05	<0.05	<0.05	<0.05	<0.05	<0.05
			Permit Requirement	0.2 maximum daily	0.2 maximum daily	0.2 maximum daily	0.2 maximum daily	(report) maximum daily	(report) maximum daily
Dissolved Zinc	ug/l	Annually	Sample Measurement	<2	<2	<2	<2	<2	<2
			Permit Requirement	120 maximum daily	120 maximum daily	120 maximum daily	120 maximum daily	(report) maximum daily	(report) maximum daily

Groundwater Quality

PERMITEE NAME: American Electric Power Company -Donald **PERMIT NUMBER** GW1810102 **DISTRICT:** Kalamazoo
MAILING ADDRESS: One Cook Place Bridgman, MI 49106 Certified Operator: Blair K. Zordell **COUNTY:** Berrien
Principle Executive Officer: Jon H. Harner
FACILITY: IN MI Power Co-Cook Plt Report Signed On: 8/14/2008
LOCATION: 1 Cook Place, Mail Zone 5A Bridgman, MI 49106 MONITORING PERIOD: FROM: 7/1/2008 TO: 7/31/2008

Parameter	Units	Sampling Frequency		EW-12	EW-13	EW-19	EW-1A	EW-8 (U.G.)	EW-16 (U.G.)
Hydrazine	ug/l	Annually	Sample Measurement	<3	6.1	<3	<3	5.1	<3
			Permit Requirement	10 maximum daily	10 maximum daily	10 maximum daily	10 maximum daily	(report) maximum daily	(report) maximum daily
			Sample Measurement						
			Permit Requirement						
			Sample Measurement						
			Permit Requirement						
			Sample Measurement						
			Permit Requirement						
			Sample Measurement						
			Permit Requirement						
			Sample Measurement						
			Permit Requirement						
			Sample Measurement						
			Permit Requirement						
			Sample Measurement						
			Permit Requirement						