TN-40HT LAR Technical Specifications

11555 Rockville Pike

Rockville, Maryland

10/30/2008

Agenda

- Introductions
- Purpose of Meeting
- Prairie Island ISFSI Background
- TN-40HT Overview
- LAR Organization/Format
- Less Restrictive TS Changes
- Walk Through Revised TS
- Plans for Future Meetings

Introductions

- NSPM
  - Lee Samson – Manager, Spent Nuclear Fuel Projects
  - Dale Vincent – Nuclear Licensing
  - Oley Nelson – TN-40HT Project Engineer
  - Marlys Davis – Regulatory Compliance

- TN
  - Steve Streutker – TN-40HT Project Engineer

Purpose

Discuss details of the revised PI ISFSI Technical Specifications in the TN-40HT LAR with NRC staff and answer any questions they may have at this time.

Project Time Line

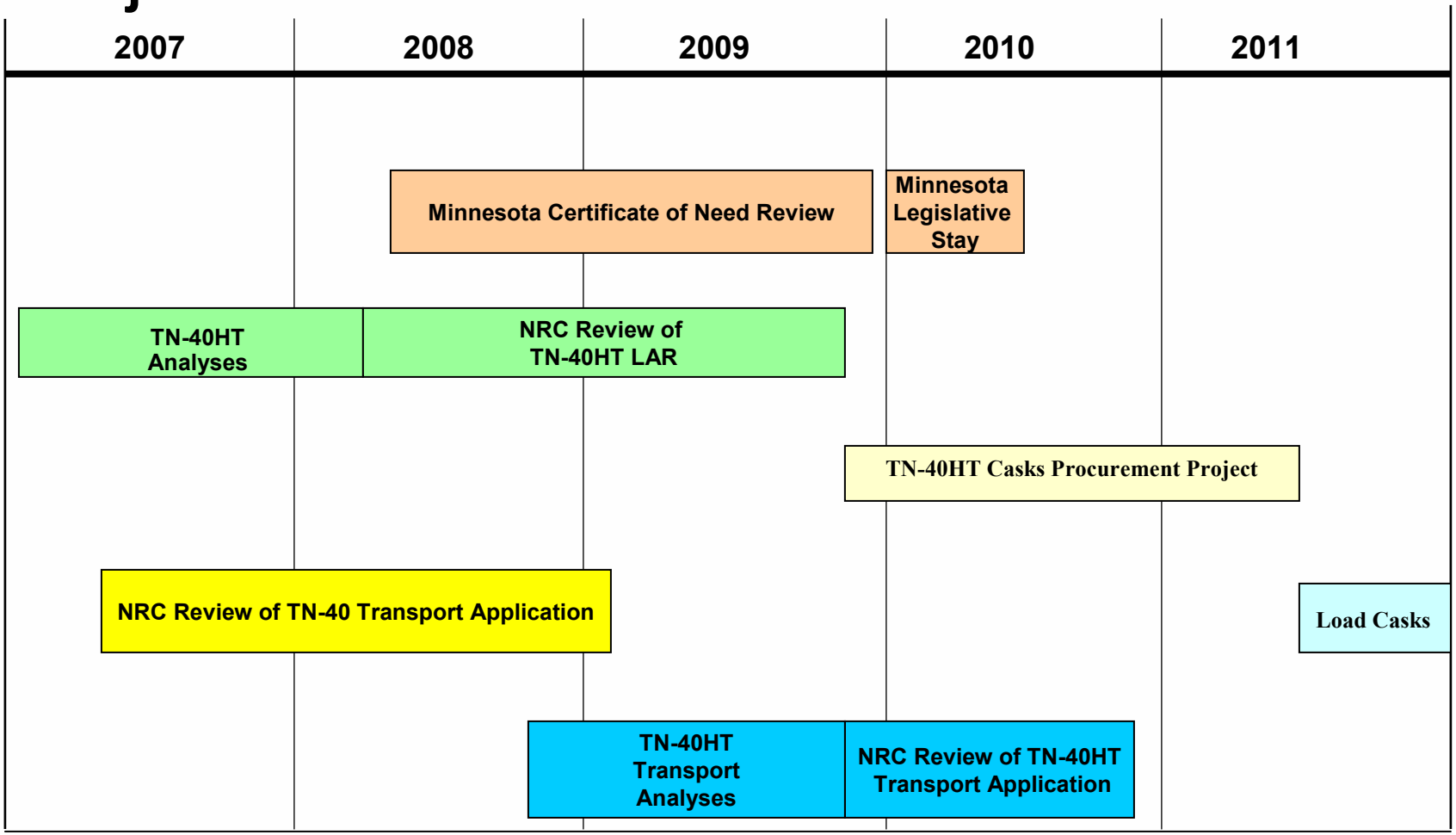

Prairie Island ISFSI Background

- 30 Miles Southeast of Minneapolis/St Paul
- 2-Loop Westinghouse PWR
- 14X14 Fuel
- ISFSI Licensed in 1993
- 24 TN-40 Casks Currently Loaded

Prairie Island ISFSI Background

- Site Specific License
- ISFSI and TN-40 in One Integral License
- Licensed to Store 48 TN-40 Casks
  - Designed for 2 – 2x12 Arrays
  - ≤ 3.85 w/o U-235 Enrichment
  - ≤ 45,000 MWd/MTU Burnup
  - ≤ 675 Watts/Fuel Assembly

TN-40HT Overview

- Need Storage for 4.95 w/o U-235 Enriched Fuel
- Need Storage for 57,000 MWd/MTU Fuel Burnup
- TN-40HT License Amendment Request:
  - ≤ 5 w/o U-235 Enrichment
  - ≤ 60,000 MWd/MTU Burnup

TN-40HT Cask

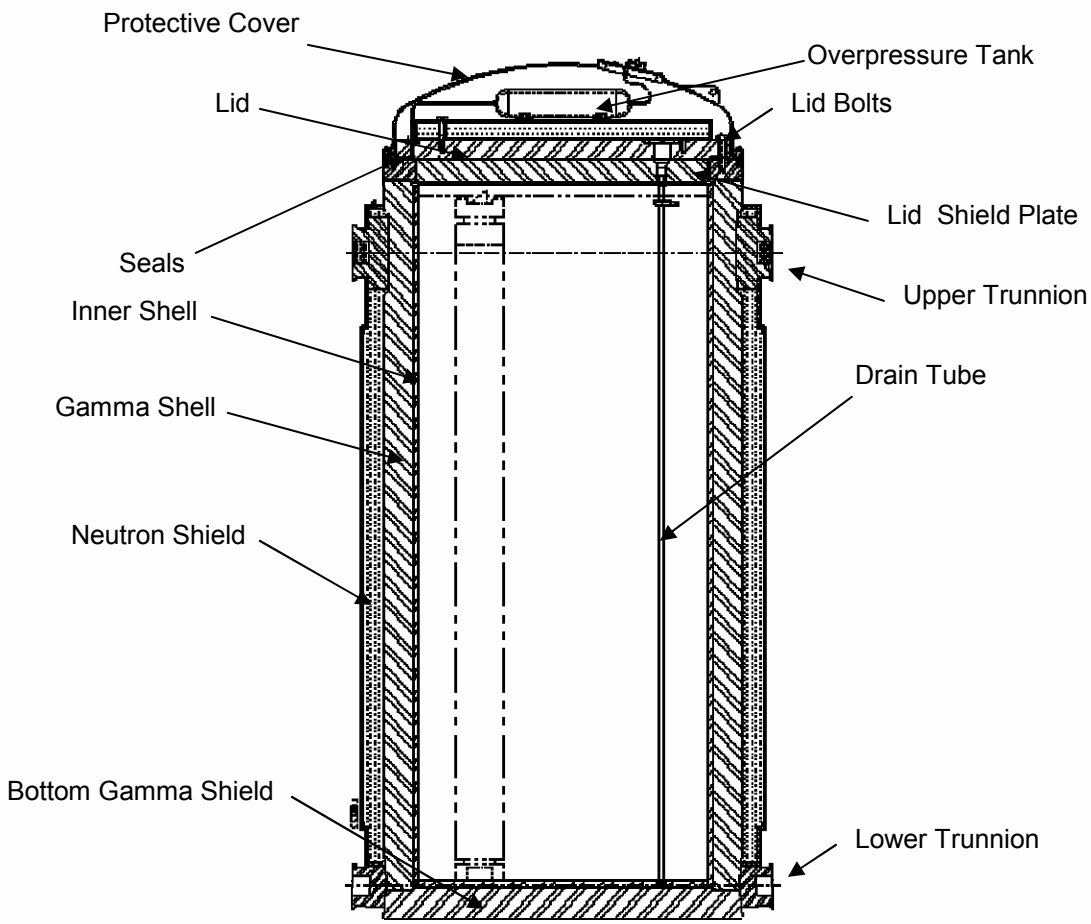
Protective Cover
Lid
Seals
Inner Shell
Gamma Shell
Neutron Shield
Bottom Gamma Shield
Overpressure Tank
Lid Bolts
Lid Shield Plate
Upper Trunnion
Drain Tube
Lower Trunnion

TN-40HT Overview

- Designed to Use Existing Equipment
  - Cask Lift Rig
  - Cask Transport Vehicle
  - Vacuum Drying
- Minimal Impact to Existing Loading and Transfer Operations

TN-40HT Basket

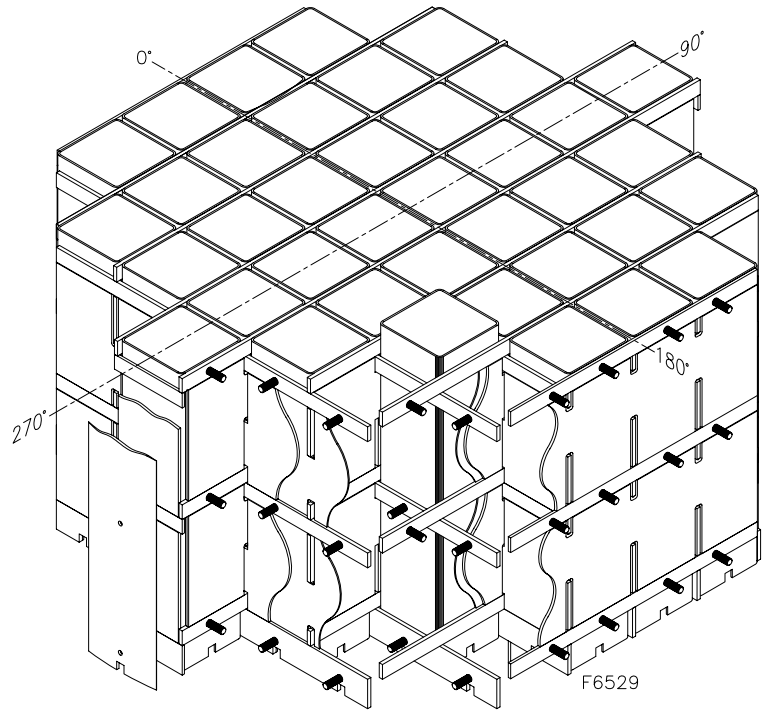

TN-40HT Overview

- Modified TN-40 Design
- Improved Heat Transfer Basket Design
  - Slotted Al and Neutron Absorber Plates Form Egg-Crate Structure
  - Improved Heat Conduction Path
  - ≤ 800 Watts/Fuel Assembly
- Stronger
  - Thicker SS Fuel Compartment Walls
  - SS Cells Fusion Welded to SS Support Bars
  - Stronger Rails
- Increased Absorber Loading

Note: Construction and Materials Similar to TN-68 cask (CoC #1027)

TN-40HT Overview

- Modifications to Cask Body
  - Thinner - Radial Gamma Shield
  - Thinner - Bottom/Lid Gamma Shield
  - Thicker - Radial Neutron Shield

LAR Organization/Format

- Submitted on 3/28/2008
- Enclosure 1 – Oath or Affirmation
- Enclosure 2 – Proprietary Affidavit
- Enclosure 3 – Evaluation
  - Attachment 1 – Revised Technical Specification Pages
  - Attachment 2 – Technical Specification Bases Pages
  - Attachment 3 – Current TS to Revised TS Cross Reference Matrix
  - Attachment 4 – Markup of Current ISFSI SAR Pages
  - Attachment 5 – Retyped Current ISFSI SAR Pages
  - Attachment 6 – ISFSI SAR Addendum A Pages (TN-40HT)

LAR Organization/Format

- Enclosure 4 – Listing of Computer Input/Output Files
- Enclosure 5 – Nonproprietary Version of SAR Addendum A
- Supplement 1 (6/26/08) – Corrections to Proprietary/Nonproprietary Pages
- Supplement 2 (8/29/08) – Revised Environmental Report Pages

LAR Organization/Format

- Enclosure 3 Attachment 6 – SAR Addendum A
  - TN-40HT Information Placed in an Addendum
  - Follows Same Organizational Format as Body of SAR
  - To Maximum Extent Practical, Used Same Subsection Headings
  - Where Current SAR Information is Independent of Cask Design or is Applicable to TN-40HT, Reference Back to Body of SAR

LAR Organization/Format

- Technical Specifications
  - Consolidate Requirements into One TS
  - Applicable to TN-40, TN-40HT, ISFSI
  - Reformat to be Consistent with Format of PINGP's TS
  - Provide Cross-Reference Matrix for NRC Benefit

LAR Organization/Format

- Cross-Reference Matrix – Cross References Each CTS Definition, Requirement, Action, and Surveillance to RTS
- Characterization of Each Change
  - NC – No Change to a Technical Requirement
  - MR – More Restrictive Technical Requirement
  - LR – Less Restrictive Technical Requirement
- Less Restrictive Changes Include a Safety Determination Summary

Less Restrictive TS Changes

Walk Through All the Less Restrictive Changes

Less Restrictive TS Changes

- Deleted Definitions for:
  - ADMINISTRATIVE CONTROLS
  - DESIGN FEATURES
  - FUEL ASSEMBLY
  - FUNCTIONAL AND OPERATING LIMITS
  - LIMTING CONDITIONS
  - SURVEILLANE INTERVAL
  - SURVEILLANCE REQUIREMENTS
- Terms are Either Not Used in the Revised TS or Commonly Used Industry Terms That do Not Require a Formal Definition.

Less Restrictive TS Changes

- CTS

  LOADING OPERATIONS: Loading Operations included all cask preparation steps before cask transport from the auxiliary building area.

- RTS

  LOADING OPERATIONS include all licensed activities on a cask while it is being loaded with fuel assemblies. LOADING OPERATIONS begin when the first fuel assembly is placed in the cask and end when the cask is supported by the transporter.

Less Restrictive TS Changes

- Functional and Operating Limit 2.1 CASK VACUUM PRESSURE DURING DRYING; Deleted Actions 1 and 2
- CTS

  If the required vacuum cannot be obtained.

  1. Check and repair vacuum drying system as necessary.
  2. Check and repair the cask seals as necessary.
- Drying System and Seal Must be Working to Satisfy SR 3.1.1.1

Less Restrictive TS Changes

- CTS; Functional and Operating Limit 2.1 CASK VACUUM PRESSURE DURING DRYING; Action if Still Unable to Meet Limit

  If the specification is still not met, remove fuel from the cask.

- RTS; LCO 3.1.1 REQUIRED ACTION A.1

  Return cask to pool and reflood. Within 7 days

- When Cask is in Pool and Flooded, There is Adequate Heat Removal to Protect the Cladding

Less Restrictive TS Changes

- Functional and Operating Limit 2.2 CASK HELIUM BACKFILL PRESSURE; Deleted Action 1
- CTS

  If the required pressure cannot be obtained.

  1. Check and repair the cask seals as necessary.
- Seal Must be Working to Satisfy SR 3.1.2.2

Less Restrictive TS Changes

- CTS; Functional and Operating Limit 2.2 CASK HELIUM BACKFILL PRESSURE; Action if Still Unable to Meet Limit

  If the specification is still not met, remove fuel from the cask.

- RTS; LCO 3.1.2 REQUIRED ACTION B.1

  Return cask to pool and reflood. Within 7 days

- When Cask is in Pool and Flooded, There is Adequate Heat Removal to Protect the Cladding

Less Restrictive TS Changes

- Functional and Operating Limit 2.3 MAXIMUM CASK LIFTING HEIGHT; Deleted Action if Limit Not Met
- CTS Action if FOL 2.3 is Not Met

  In the event of a cask drop from a height greater than 18 inches (45 cm), with fuel in the cask, the fuel shall be returned to the spent fuel pool and visually inspected. If the spent fuel meets the requirements for storage in the ISFSI, the fuel may be subsequently transferred to the ISFSI. The cask shall be removed from service and evaluated for further use or disposed of, as may be appropriate.
- Only Applies if Cask is Dropped
- Requiring Fuel Inspections is Redundant With UNDAMAGED FUEL Requirement

Less Restrictive TS Changes

- CTS; SR 4.3.1 Cask Seal Helium Leak Testing

  During cask loading operations, the cask seals shall be tested in accordance with ANSI N14.5, to ensure that the seal leakage is less than or equal to 10-5 atm-cc/s.

- RTS; SR 3.1.3.1Cask Seal Helium Leak Testing

  Verify the cask helium leak rate is ≤ 1.0 E-5 atm-cc/sec.

- Requirement to use ANSI N14.5 is Relocated to Bases.
- No Change in How Test Will Be Conducted.

Less Restrictive TS Changes

- CTS; LCO 3.6.1 Cask Dose Rates

gamma	neutron	
60mrem/hr	10mrem/hr	at center of top protective cover,
170mrem/hr	130mrem/hr	between cask flange and side neutron shield,
50mrem/hr	25mrem/hr	at mid-height of side neutron shield, and
60mrem/hr	170mrem/hr	between cask bottom and side neutron shield.

- RTS; LCO 3.2.2 and SR 3.2.2.1

gamma	neutron	
45mrem/hr	10mrem/hr	at center of top protective cover,
80mrem/hr	190mrem/hr	between cask flange and side neutron shield,
40mrem/hr	35mrem/hr	at mid-height of side neutron shield, and
85mrem/hr	930mrem/hr	between cask bottom and side neutron shield.

- New Rates Consistent With TN-40HT and Will Ensure Offsite Dose Rates are Acceptable.

Less Restrictive TS Changes

- CTS; LCO 3.6.1 Action if Cask Dose Rates Limits Not Met

  If the measured dose rate exceeds the limit, correct fuel loading shall be verified. If correct fuel is loaded, specific analysis must be demonstrate compliance with 10 CFR Part 20, and 10 CFR Part 72 radiation protection requirements, or appropriate action must be taken to comply with acceptable limits. If acceptable limits cannot be achieved, the cask shall not be placed in service at the ISFSI.

- RTS; LCO 3.2.2 Required Action A.1

  Perform specific analysis demonstrating compliance with 10 CFR Part 20, and 10 CFR Part 72 radiation protection requirements.

- Correct Fuel Loading Verified in SR 3.4.1.1 and SR 3.4.1.2.
- SR 3.2.2.1 Satisfied Prior to TRANSPORT OPERATIONS

Less Restrictive TS Changes

- Deleted Tables 3/4-1 and 3/4-2 Cask Operating Limits and Surveillance Requirements Summary
- Information is Redundant to That Contained in the Specific FOLs and LCOs
- Deleting Redundant Information Does Not Affect Safety

Revised Technical Specifications

Revised Technical Specifications Discussions

Revised Technical Specifications

- Formatted Consistent With Improved Standard Technical Specification Format Used at Prairie Island Plant
- Precise Formatting Rules to Facilitate Human Performance
- LCOs State That Parameter/Item Shall Meet Limits
- SRs Contain Numerical Valve of Limit(s)
- Rules of Usage are the Same as For Prairie Island Plant's TS.

Revised Technical Specifications

- Only Changes to USE AND APPLICATION Section of Plant's TS were Those Needed to Reflect Uniqueness of Casks
- Section 1.2 Logical Connectors
- Section 1.3 Completion Times
- Section 1.4 Frequency
  - Surveillance Must be Met Within "Specified Frequency" to Meet Associated LCO
  - "Specified Frequency" Consists of Requirements in Frequency Column as Well as Certain Notes in Surveillance Column That Modifies Performance Requirements
  - "Met" or "Performed" Convey Different Meanings

Revised Technical Specifications

- LCO 3.0.1 – LCOs Shall Be Met During Applicability
- LCO 3.0.2 – If LCO is Not Met, Then Required Actions Shall Be Met
- LCO 3.0.3 – Motherhood, What to do if LCO and Associated Actions are Not Met or if No Action Provided
- LCO 3.0.4 – Conditions for Allowing Entry into Applicability if LCO is not Met
- LCO 3.0.5 – Allow Return of Equipment for Testing Under Administrative Control
- LCO 3.0.6 Through 3.0.9 – Not Applicable to ISFSI

Revised Technical Specifications

- SR 3.0.1 – SR Shall be Met During Applicability
- SR 3.0.2 – SR is Met If Performed Within 1.25 Times Specified Interval
- SR 3.0.3 – SR Allows 24 Hours (or Surveillance Interval) to Perform Missed Surveillance
- SR 3.0.4 – SR Must be Met Prior to Entering Applicability

Revised Technical Specifications

Walk Through the Revised Technical Specifications

Plans For Future Meetings

Would Meetings to Walk Through the Various Disciplines (e.g. Criticality, Shielding, Structural) be Beneficial?

Questions ?

Xcel Energy®