US-APWR
Sump Debris
Chemical effects Test plan

Non-Proprietary Version

November 2008

Ⓒ2008 Mitsubishi Heavy Industries, Ltd.
All Rights Reserved

Revision History

Revision	Page	Description
0	All	Original issued
1 (Nov-2008)	6	Section 3.1 Table 3.1-1; RCS water volume English value was corrected to be consistent with SI unit value that was used in the evaluation.
	6	Section 3.1 third paragraph; - Additional details to incorporate the response to RAIs from NRC on July 31, 2008 (RAI No. 45-876rev0 06.02.02-3).
	9	Section 3.1.2.2 Table 3.1-2; - Clarification for material description to incorporate the response to RAIs from NRC on July 31, 2008(RAI No. 45-876rev0 06.02.02-1)..
	11	Figure 3.1-2a,-2b - Sump water temperature profile graph was corrected to be consistent with the temperature profile that was used in the evaluation for the testing conditions. (The changes do not affect the test conditions)
	12	Section 3.1.3.1 third paragraph; - Clarification for definition of temperature conditions was provided.
	18	Section 3.3.1.2 the last line of ‘chemistry parameters’; - An additional parameter value to incorporate the response to RAIs from NRC on July 31, 2008(RAI No. 45-876rev0 06.02.02-3)..
	18	Section 3.3.1.2 Table 3.3-1; - Additional parameter values ‘pH’ to incorporate the response to RAIs from NRC on July 31, 2008(RAI No. 45-876rev0 06.02.02-3).
	18	Section 3.3.1.2 Table 3.3-1; - Clarification for test run case number as a test plan.
	22	Figure 3.3-1 - Sump water temperature profile was corrected to be consistent with change of Figure 3.1-2a(The changes do not affect the test conditions)
	29	Section 7 Reference No.5 was revised to be consistent with revised DCD, MUAP-DC006(R1).

© 2008
MITSUBISHI HEAVY INDUSTRIES, LTD.
All Rights Reserved

This document has been prepared by Mitsubishi Heavy Industries, Ltd. ("MHI") in connection with the U.S. Nuclear Regulatory Commission's ("NRC") licensing review of MHI's US-APWR nuclear power plant design. No right to disclose, use or copy any of the information in this document, other than by the NRC and its contractors in support of the licensing review of the US-APWR, is authorized without the express written permission of MHI.

This document contains technology information and intellectual property relating to the US-APWR and it is delivered to the NRC on the express condition that it not be disclosed, copied or reproduced in whole or in part, or used for the benefit of anyone other than MHI without the express written permission of MHI, except as set forth in the previous paragraph.
This document is protected by the laws of Japan, U.S. copyright law, international treaties and conventions, and the applicable laws of any country where it is being used.

Mitsubishi Heavy Industries, Ltd.
16-5, Konan 2-chome, Minato-ku
Tokyo 108-8215 Japan

Abstract

The containment of the US-APWR is designed to accommodate the energy release following a postulated accident. The containment also permits the recirculation of reactor coolant, the containment spray system (CSS) water and emergency core cooling system (ECCS) water to the decay heat removal (DHR) heat exchangers. Water collected in the recirculation sump from the reactor coolant system, the safety injection system, and the containment spray system is recirculated through the reactor core to remove residual heat. The recirculation sump contains strainers to protect the downstream components that are in the reactor coolant, containment spray, and ECCS flow paths from the effects of debris that could be transported to the recirculation sump. During operation of the ECCS, debris in the recirculating fluid that passes through the recirculation sump strainers may affect long-term core cooling when recirculating coolant from the recirculation sump.

The PWR post-LOCA (loss-of-coolant accident) environment creates several challenges to containment materials and debris sources based on temperature, chemical reactions, and effects from sprayed and pooled water. The combination of spray chemicals, insulation, corroding metals, and submerged materials creates a potential condition for the formation of chemical substances that may impede the flow of water through the recirculation sump strainers or affect downstream components in the emergency core cooling or reactor coolant systems.

The Integrated Chemical Effects Test (ICET) Project represented a joint effort by the United States (U.S.) Nuclear Regulatory Commission (NRC) and the nuclear utility industry to simulate the post-LOCA chemical environment present inside a containment structure and to monitor the chemical system for an extended period of time to identify the presence, composition, and physical characteristics of chemical products that may form. The ICET test series was conducted by Los Alamos National Laboratory (LANL) at the University of New Mexico (UNM). The results of the ICET testing are published NUREG/CR-6914.

The US-APWR is a low fiber plant that uses sodium tetraborate as a buffer and based on a review of the results presented for ICET Test#5 is expected to have minimal corrosion and reaction products. However, in order to further understand the plant specific interactions between the containment materials and post-LOCA debris with the recirculation sump fluid chemistry, MHI has elected to perform an ICET experiment for the US-APWR.

The objective for the chemical effect experiment is to obtain experimental data under simulated plant conditions on the corrosion products that may form in a post-LOCA environment.

This data will then be used to determine compositions, characterize properties, and quantify masses of chemical reaction products that may develop in the recirculation sump under a representative post-LOCA environment. The test based on this report will be performed in Takasago Research and Development Center.

Table of Contents

List of Tables iii
List of Figures iv
List of Acronyms v

1.0 INTRODUCTION 1
2.0 OBJECTIVE 3
3.0 TEST PLAN 4
3.1 Definition of Test Parameters 5
3.1.1 Test Fluid 5
3.1.2 Test Materials 7
3.1.2.1 Insulation Materials 8
3.1.2.2 Structural Materials 8
3.1.3 Test Conditions 9
3.1.3.1 Temperature 9
3.1.3.2 Recirculation Test Tank Flow Rate 12
3.1.4 Duration of Test 12
3.2 Test Apparatus Functional Requirements 13
3.2.1 Recirculation Test Apparatus 13
3.2.2 Autoclave Test Apparatus 15
3.3 Test Program and Guidelines 17
3.3.1 Test Program 17
3.3.1.1 Recirculation Test 17
3.3.1.2 Autoclave Test 18
3.3.2 Test Coupon Preparation 19
3.3.3 Test Operation 20
3.3.3.1 Recirculation Test 20
3.3.3.2 Autoclave Test 21
3.3.4 Test Termination Criteria 23
3.4 Examination of Test Samples 24
3.4.1 Test Coupon examination 24
3.4.2 Fiberglass Sample examination 24
3.4.3 Precipitate/Sediment Examination 24
3.4.4 Fluid Sample Examination 24
4.0 QUALITY ASSUARANCE 26
5.0 DOCUMENTATION 27
6.0 SCHEDULE 28
7.0 REFERENCES 29

List of Tables

Table 3.1-1	Plant Chemistry Condition	6
Table 3.1-2	Sump debris sources information	9
Table 3.3-1	Autoclave Test Run Conditions	18
Table 6.0-1	Test Schedule	28

List of Figures

Figure 3.1-1a Post-LOCA Containment Vessel Atmospheric Temperature Profile (24 hours) 10
Figure 3.1-1b Post-LOCA Recirculation Sump Water Temperature Profile (24 hours) 10
Figure 3.1-2a Short term (Autoclave) Recirculation Sump Water Temperature Profile 11
Figure 3.1-2b Long term (Recirculation) Recirculation Sump Water Temperature Profile 11
Figure 3.2-1 Outline of Recirculation test apparatus 14
Figure 3.2-2 Outline of autoclave test apparatus 16
Figure 3.3-1 Autoclave test liquid temperature profile (estimated) 22

List of Acronyms

AAS	Atomic Absorption Spectroscopy
Al	Aluminum
APWR	Advanced Pressurized Water Reactor
Ca	Calcium
CSS	containment spray system
DHR	Decay Heat Removal
ECCS	Emergency Core Cooling System
GL	Generic Letter
GSI	Generic Safety Issue
ICET	Integrated Chemical Effects Testing
ICP	Inductively Coupled Plasma
ICP-AES	Inductively Coupled Plasma-Atomic Emission Spectroscopy
LANL	Los Alamos National Laboratory
LBLOCA	Large Break Loss of Coolant Accident
LOCA	Loss of Coolant Accident
$NaAlSi_3O_8$	Sodium Aluminum Silicate
NaOH	Sodium Hydroxide
NaTB	Sodium Tetra Borate, decahydrates $Na_2B_4O_7 \cdot 10H_2O$
NEI	Nuclear Energy Institute
MHI	Mitsubishi Heavy Industries, Ltd.
NRC	Nuclear Regulatory Commission
PWR	Pressurized Water Reactor
PWROG	Pressurized Water Reactor Owners Group
RCS	Reactor Coolant System
RMI	Reflective Metal Insulation
RWSP	Refueling Water Storage Pit
SEM/EDS	Scanning Electron Microscopy/Energy Dispersive Spectrometer
Si	Silicon
UNM	University of New Mexico
ZOI	Zone of Influence

1.0 INTRODUCTION

Generic Letter (GL) 2004-02 (Ref. 1) required PWRs to perform evaluations of the emergency core cooling system (ECCS) and the containment spray recirculation functions. These evaluations are to include the potential for debris blockage at the recirculation sump screens and flow restrictions within the ECCS recirculation flow path downstream of the recirculation sump screen, including potential blockage at fuel assembly inlet debris screens. Other potential flow restrictions are the fuel assembly inlet debris screens and the spacer grids within the fuel assemblies. Debris blockage at such flow restrictions has the potential to impede or prevent the recirculation of coolant to the reactor core, potentially leading to inadequate long-term core cooling.

The containment of the US-APWR is designed to accommodate the energy release following a postulated accident. The containment also permits the recirculation of reactor coolant, the containment spray system (CSS) water and emergency core cooling system (ECCS) water to the decay heat removal (DHR) heat exchangers. Water collected in the recirculation sump from the reactor coolant system, the safety injection system, and the containment spray system is recirculated through the reactor core to remove residual heat. The recirculation sump contains strainers to protect the downstream components that are in the reactor coolant, containment spray, and ECCS flow paths from the effects of debris that could be transported to the recirculation sump. During operation of the ECCS, debris in the recirculating fluid that passes through the sump strainers may affect long-term core cooling when recirculating coolant from the recirculation sump.

The acceptance criteria for the performance of a nuclear reactor core following a LOCA are found in Section 50.46 of Title 10 of the Code of Federal Regulations (10 CFR). The acceptance criterion dealing with the long-term cooling phase of the accident recovery is as follows:

“Long-term cooling: After any calculated successful initial operation of the ECCS, the calculated core temperature shall be maintained at an acceptably low value and decay heat shall be removed for the extended period of time required by the long-lived radioactivity remaining in the core. “

NEI-04-07 (Ref. 2) and the Staff Safety Evaluation on this document provide an acceptable method for licensees to evaluate the post-LOCA debris sources and their impact on specifically recirculation sump performance and providing adequate assurance of maintaining long term core cooling. The NEI-04-07 document provides limited guidance on three supplemental topical areas: 1) strainer head loss testing, 2) chemical effects and 3) downstream effects due to the immaturity of these issues at the time of the NEI-04-07 issuance. Largely these remaining issues have been resolved by Industry and the NRC has issued GL Supplemental Review Guidance for approved methods. However, the issue of chemical effects and the impact on downstream components, more importantly the impact on fuel, has not been fully resolved at this time.

The PWR post-LOCA environment creates several challenges to containment materials and debris sources based on temperature, chemical reactions, and effects from sprayed and pooled water. The combination of spray chemicals, insulation, corroding metals, and submerged materials creates a potential condition for the formation of chemical substances

that may impede the flow of water through the recirculation sump strainers or affect downstream components in the emergency core cooling or reactor coolant systems.

The Integrated Chemical Effects Test (ICET) Project represented a joint effort by the United States (U.S.) Nuclear Regulatory Commission (NRC) and the nuclear utility industry to simulate the post loss of coolant accident (LOCA) chemical environment present inside a containment structure and to monitor the chemical system for an extended period of time to identify the presence, composition, and physical characteristics of chemical products that may form. The ICET test series was conducted by Los Alamos National Laboratory (LANL) at the University of New Mexico (UNM). The results of the ICET testing are published NUREG/CR-6914 (Ref. 3).

The US-APWR is a low fiber plant that uses sodium tetraborate as a buffer and based on a review of the results presented for ICET Test#5 is expected to have minimal corrosion and reaction products. However, in order to further understand the plant specific interactions between the containment materials and post-LOCA debris with the recirculation sump fluid chemistry, MHI has elected to perform an ICET experiment for the US-APWR. The test based on this report will be performed in Takasago Research and Development Center.

2.0 OBJECTIVE

The objective for the chemical effect test is to obtain experimental data under simulated plant conditions on the corrosion products that may form in a post-LOCA environment.

This data will then be used to determine compositions, characterize properties, and quantify masses of chemical reaction products that may develop in the containment under a representative post-LOCA environment.

The test results will be used for the downstream chemical effects evaluation to confirm their minimal impact on long term cooling.

3.0 TEST PLAN

The chemical effects testing will entail two separate tests:

- An Autoclave test that simulates the temperature transient of the first 100 hours of the post-LOCA, and
- A Recirculation test that simulates the post-LOCA long term environment from 100 hours to 30 days.

This test plan includes the following four (4) items:

1. Definition of test parameters
2. Requirement of the test apparatus
3. Test program and guideline
4. Examination of test samples

3.1 Definition of Test Parameters

The experiment is designed to replicate the potential corrosive interactions of the spray and recirculation sump fluid chemistry with those materials and debris sources in containment. The test tank is intended to represent the containment conditions with respect to recirculation sump liquid volume and chemistry, temperature and materials. To replicate the corrosion potential of the structural materials inside containment, the experiment will preserve the material surface area to recirculation sump volume similar to the ICET experiments. Past experience with these types of corrosion experiments have shown that the structural materials do not dissolve in containment, but surfaces corrode; therefore, the mass of the structural materials will only be recorded to correlate the mass loss to corrosion. Debris materials may also be resident in the recirculation sump. Typical fibrous debris materials are large and small pieces of insulation and since the insulation pieces are semi-porous materials (collection of glass fibers), the volume of these materials will be assured through the test tank volume to pool volume ratio.

The testing will be conducted using scaled quantities of non-metallic, metallic, and cementitious materials exposed to the warm, slightly basic pH liquid of the pool and spray environment. The specific parameters identified in the test plan are based on the evaluation of the US-APWR plant condition.

3.1.1 Test Fluid

The test is intended to replicate the containment post-LOCA recirculation sump chemistry and circulate this solution throughout the test. For passive buffer systems, upon initiation of the accident, borated water is injected into the RCS through the refueling water storage pit (RWSP) to maintain the core cooling. At the same time, through a different delivery system, the buffer is dissolved in the RWSP. This test represents passive granular buffer system sodium Tetraborate (NaTB).

Table 3.1-1 provides the specific chemistry conditions of the US-APWR.

Table 3.1-1 Plant Chemistry Conditions

Item		Value	Remarks
Post-LOCA Recirculation Sump Water Volume (Min.)		43930 ft^3	Sump water volume does not include RCS water volume
RCS Water Volume(Min.)		699000 lbm	RCS water volume does not include Accumulators water volume
Recirculation Sump Water Boric acid Concentration (As B)		4000-4200 ppm B	
RCS Boric acid Concentration (As B)		0-2250 ppm B	
RCS LiOH Concentration		0 - 3.5 ppm Li	
NaTB Dose Quantity		20 – 22 ton	
Safety Injection Flow Rate (Max.)		6160 gpm	
Containment Spray Flow Rate (Max.)		9800 gpm	
Recirculation Sump Water Temperature	Initial	120 ^oF	Maximum temperature includes atmospheric maximum temperature conservatively.
	Max.	284 ^oF	
	Long term.	Less than 149 ^oF	

Fluid pH

The pH of the recirculation sump solution and containment spray solutions will have a large effect on corrosion and precipitation reactions. Hydrated sodium tetraborate (borax NaTB) is the standard chemical used for pH control in post-LOCA recirculating fluid in the US-APWR plants.

For the US-APWR plant, the NaTB is stored in baskets in the containment and is dissolved by the post-LOCA solution within a certain time. The pH transition occurs during the high temperature period and will affect only the short term autoclave experiment.

Therefore, during the initial 100 hour period, the pH is estimated to transition from approximately 4 to 8 (depending on the mass of NaTB in containment). Therefore, the autoclave experiment will require several tests at different pH since there is limited ability to change the pH in the autoclave. The autoclave test will include tests at acidic to basic pH variations. The recirculation test will run at a constant pH depending on the mass of NaTB added to the test tank fluid.

Aeration

All tests will be conducted in normally aerated (e.g., air saturated) conditions. It is also recognized that some reduction of pH may result from entrainment of CO_2 in the fluid. This affect is negligible because of test solution is composed of high concentration buffer chemicals.

Lithium

Lithium concentration typically varies between 0 and 3.5 ppm Li in the RCS, therefore the concentration would be less than 0.7 ppm Li in the post-LOCA recirculation solution. The impact on pH is negligible when compared to the NaTB concentration (approx. 14000 ppm). However, this minimal concentration (0.7 ppm Li) will be incorporated into the experiment for completeness.

Other

Hydrochloric acid (HCL) can form from the degradation of cable insulation material over the 30 days. The recirculation test will account for this degradation by establishing an initial concentration of 100 ppm of HCL in the fluid simulating the recirculation sump inventory.

3.1.2 Test Materials

The containment materials are divided into the two locations relative to the recirculation sump: submerged and unsubmerged (above flood plane). Submerged materials are insulation and debris that are created by the high energy line break as well as structural materials within containment below the flood plane. This material may produce corrosion products or chemical interactions. Unsubmerged materials are materials within containment that are exposed to containment spray and are above the recirculation sump flood plane. These materials may contribute to the corrosion products.

The materials to be included in the test tank are intended to represent the significant structural materials which could interact with the containment spray or recirculation sump chemistry. These materials will be placed in the recirculating solution and are identified in Table 3.1-2. The test coupons will be marked to provide positive identification to the experiment and recorded in the project logs. The marking, initial weight and initial surface area are to be recorded.

The materials to be included in the test are:

1. Exposed and destroyed insulation
2. Ablated structural materials such as concrete
3. Structural materials such as Aluminum, Zinc (Galvanized Zinc coating), Copper, Iron Steel.

The metal test materials will be present in the simulated containment environment as coupons or bulk materials, their size scaled to give the appropriate surface area to pool volume ratio as provided in Table 3.1-2. Since the spray duration is from t=0 to t=30 days, the unsubmerged materials will be submerged into the test fluid for the duration of the test for the autoclave. The recirculation tank has provisions to simulate spray on the materials.

3.1.2.1 Insulation Materials

Insulation materials in the US-APWR are metallic stainless steel RMI and fibrous NUKON™ insulation (hereafter referred to as fiberglass). The stainless steel RMI is non-reactive and will not be included in the test. The fibrous insulation shall be prepared to a size distribution such that it is representative of that in a post-LOCA environment (e.g., fines, small pieces and intact blankets). It is acceptable to procure commercially available NUKON™ insulation for this experiment.

The insulation materials will be confined in SS(Stainless Steel) mesh bags to preclude transport in the test tank and potential ingestion into the pump but still allow interactions with the recirculating fluid.

3.1.2.2 Structural Materials

Structural materials will be represented by metallic or concrete coupons placed onto racks in the test tank depending on their locations (submerged or unsubmerged). The coupons are either thin sheets of metal or discs of concrete.

The required values for material surface areas corresponding to the minimum post-LOCA recirculation sump volume of recirculation water have been tabulated and are the basis for the material surface to recirculation sump water volume ratios identified in Table 3.1-2.

The surface area of each material type to be used in the test is based on the actual plant material surface area times the ratio of the test volume to minimum recirculation sump volume. The liquid volume of the recirculation test tank is 1 cubic meters (approx.264 gallons) and the autoclave test tank is 7 Liters.

Table 3.1-2 Sump debris sources information

Material	Containment Quantity	Material/Sump Water Ratio[Note1]	Submerged (%)	Un-submerged (%)
Nukon™ insulation	71 ft^3 [Note 2]	0.0013 ft^3/ft^3	100	0
Concrete particulate	170 lbm	0.003 lbm/ft^3	100	0
Galvanized steel	242000 ft^2	4.4 ft^2/ ft^3	0	100
Aluminum	810 ft^2	0.015 ft^2/ ft^3	0	100
Concrete	1050 ft^2	0.019 ft^2/ ft^3	0	100
Carbon Steel	8000 ft^2	0.15 ft^2/ ft^3	0	100
Copper	21500 ft^2	0.39 ft^2/ ft^3	0	100

Note 1 Based on the minimum recirculation sump water volume which is 55126 ft^3 including the RCS volume.

Note 2 To be converted to a mass to volume ratio based on the specific fiberglass density.

3.1.3 Test Conditions

3.1.3.1 Temperature

The temperature history expected in a post-LOCA environment is highly dependent upon plant operation scenarios and the nature of the break causing the LOCA. The maximum temperature is expected during the first twenty-four (24) hours of the LOCA shortly after the break occurs, with the recirculation sump water temperature gradually decreasing until the system temperature stabilizes and can be considered constant for the long time core cooling.

The plant specific predicted temperature versus time profile during the first twenty-four (24) hours for a large break LOCA are shown in Figures 3.1-1(a) and (b) (Ref. 4, Ref. 5). Figure 3.1-2(a) and (b) provide the recirculation sump water temperature profiles for the short-term (autoclave test) and long-term (recirculation test) based on preliminary calculations.

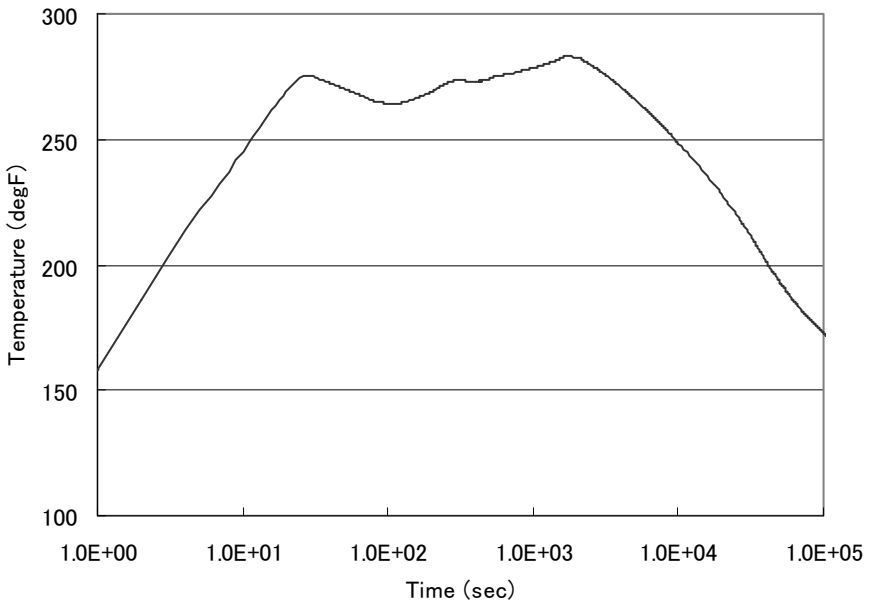

Figure 3.1-1a Post-LOCA Containment Vessel Atmospheric Temperature Profile (24 hours)

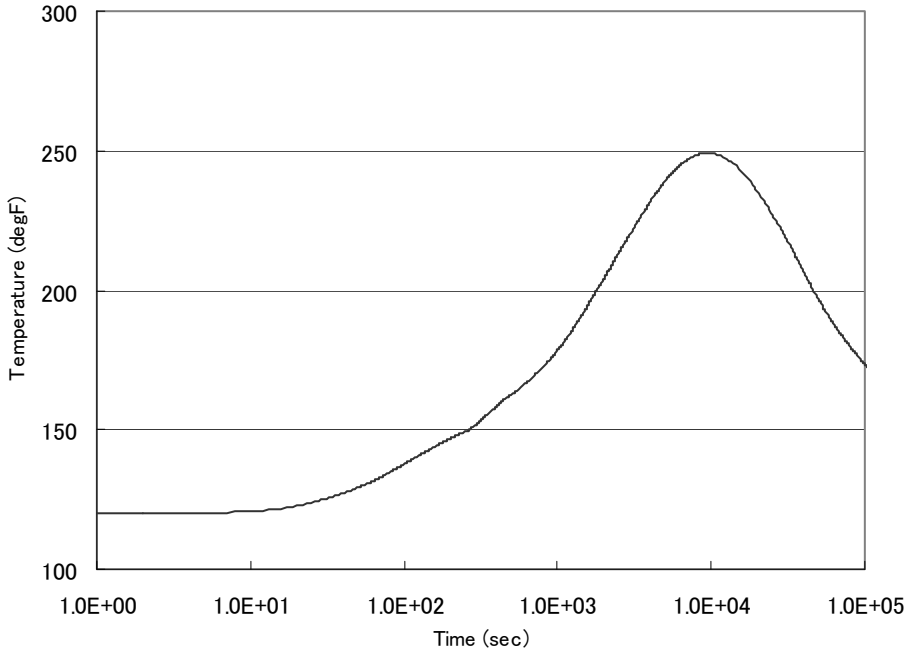

Figure 3.1-1b Post-LOCA Recirculation Sump Water Temperature Profile(24 hours)

Figure 3.1-2a Short term (Autoclave) Recirculation Sump Water Temperature Profile

Figure 3.1-2b Long term (Recirculation) Recirculation Sump Water Temperature Profile

The test temperature profile is established conservatively high to ensure a conservative production of corrosion products. This test plan will develop two (2) tests to account for both the short term (above 212°F) and long term (below 212°F) temperature conditions:

Test 1: Autoclave test for temperatures greater than 212°F.

The autoclave test water temperature will be similarly operated with a time-temperature profile representative of the US-APWR post-LOCA operation for the first 100 hours until such time the temperature falls to 149°F approximately.

Test 2: Recirculation test for temperatures less than 212°F .

The recirculation test loop will be operated at a constant temperature of 149°F.

3.1.3.2 Recirculation Test Tank Flow Rate

The recirculation test tank has provisions to split the pump flow between the spray zone and pool/tank recirculation. The following provides the parameters for the flow selected in the two (2) zones.

Containment Spray

The ratio of containment spray flow rate to containment cross section area will be used as a simulation parameter. The value of containment spray flow rate and the containment cross-sectional diameter are plant specific parameters. The values below are representative for the US-APWR design and are recommended for use in the test program.

Ratio of containment spray flow rate to containment cross sectional area:

Containment spray flow rate	9800gpm
Containment vessel Inner Diameter	149ft - 2in
Containment vessel cross section area	17475 ft^2
Flow/Area Ratio (velocity)	1.25 X 10^{-3} ft/s

Recirculation Sump

Velocities over test material should be representative of post-LOCA fluid velocity conditions in the US-APWR recirculation sump – which range from near zero (quiescent) to 3.2in/s. Due to tank configuration all fluid will gravitate toward the bottom of the tank outlet. With the spray flow rate established, the balance of the flow will be directed to the tank pool recirculation. The pool turnover rate of the test tank is approximately over several times per 1 hour while that of actual plant is about 1-2 times per hour.

3.1.4 Duration of Test

Maximum duration of recirculation test will be limited to 30 days.

Maximum duration of the autoclave test will be limited to 100 hours.

3.2 Test Apparatus Functional Requirements

The functional requirements for the recirculation test apparatus and autoclave test apparatus are described in the following sections.

3.2.1 Recirculation Test Apparatus

The recirculation test apparatus is designed to meet the functional requirements of this test plan. Specifically, the functional aspects of the recirculation test apparatus are as follows:

1. The central component of the system is a test tank. The test apparatus is designed to prevent solids from settling in the test piping.
2. The system includes a pre-mixing tank to ensure the solution chemistry is adequately established prior to introduction into the preparation tank.
3. The test tank includes both a pool and atmospheric environment as expected in a post-LOCA containment.
4. The test tank is controlled at the required test temperature of 149 ^{o}F (±5 ^{o}F).
5. The test tank has provisions for spray representative of that in the containment.
6. Piping and related isolation valves are provided such that a section of piping could be isolated without interrupting a test.
7. The pump discharge line is split into two branches: one branch directing flow to the spray header in the tank and the other branch returning flow (recirculation) to the liquid pool. Each branch is provided with an isolation valve and a flow measurement.
8. The main pump flow rate is controlled at the pump discharge to be within ±5% of the flow required to establish target flow rate in both the spray and pool region. Flow is controlled manually by the discharge control valve.
9. The test tank accommodates a rack of sample coupons subject to spray.
10. The fluid volumes and sample surface areas are based on scaling considerations that relate the test conditions to actual plant conditions.
11. Provisions will be made for these racks to be visually inspected through polycarbonate windows.

The test loop consists of a test tank, a preparation tank, a recirculation pump, 2 flow meters, several isolation valves, and pipes that connect the major components, as shown schematically in Figure 3.2-1.

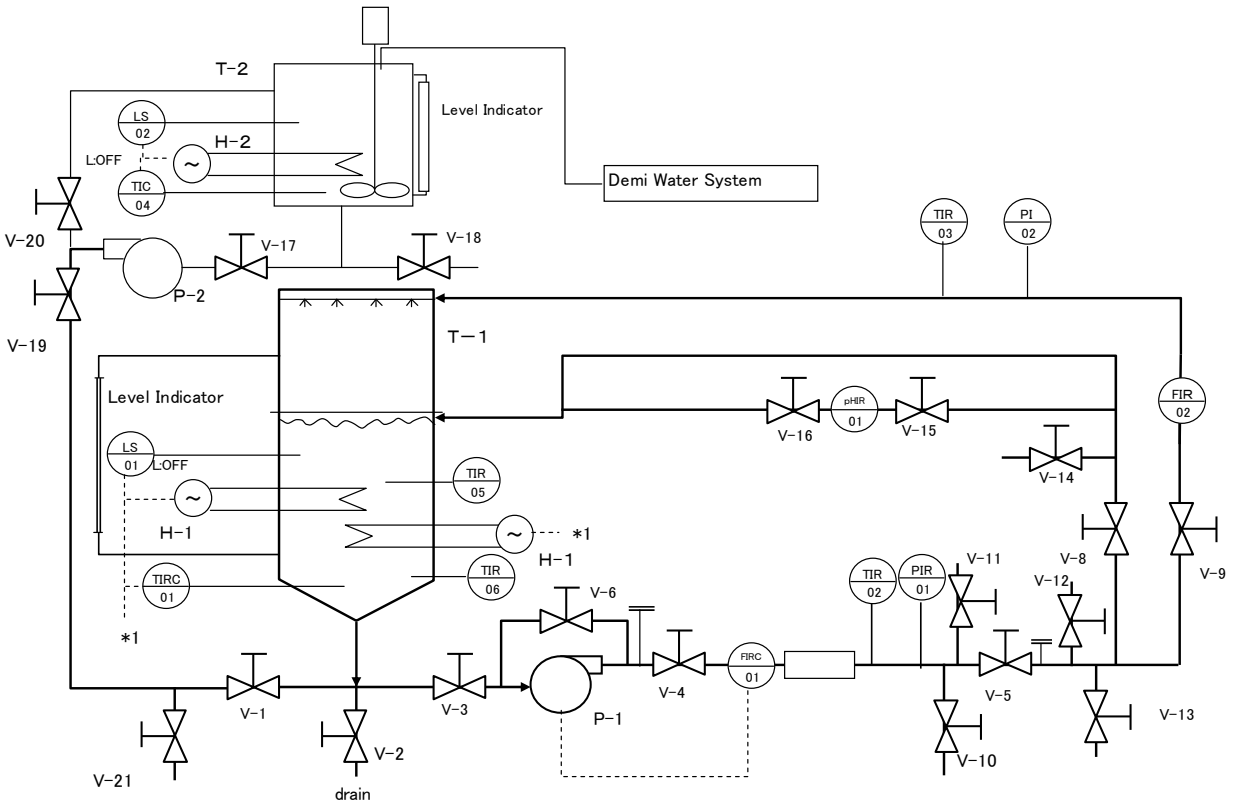

T-1	Test Tank
T-2	Preparation Tank
P-1	Circulation Pump
P-2	Feed Pump
H-1	Test Tank Heater
H-2	Preparation Tank Heater
FIRC-01	Circulation Flow Indicator/Recoder/Controler
FIR-02	Spray Flow Indicater/Recorder
pHIR-01	pH Indicater/Recorder
TIRC-01	Tank temperature Indicater/Recorder/controler
TIR-02	Circurating Water Indicator/Recorder
TIR-03	Spray Water Temp Indicater/Recorder
TIC-04	Preparation Tank Temperature Indicater/Contoroler
TIR-05	Tank temperature Indicater/Recorder
TIR-06	Tank temperature Indicater/Recorder
PIR-01	Circurating line Pressure Indicator/Recorder
PI-02	Spray Pressure Indicator/Recorder
LS-01	Test Tank Level Switch
LS-02	Preparation Tank Level Switch

V-1	Test Water Feed Valve
V-2	Test Water Drain Valve
V-3	Circurating LineStop Valve
V-4	Circurating Pump discharge valve
V-5	Circurating flow meter outlet valve
V-6	Bypass Line valve
V-7	not applicable
V-8	Circurating LineStop Valve
V-9	Spray line valve
V-10	Sampling Valve 1
V-11	Filter line valve 1
V-12	Filter line valve 2
V-13	spare valve 1
V-14	spare valve 2
V-15	pH meter inlet valve
V-16	pH meter outlet valve
V-17	Test Tank Outlet Valve
V-18	Test Tank Drain Valve
V-19	Feed Pump Outlet Valve
V-20	Preparation Tank Circurating Valve
V-21	Drain valve

Figure 3.2-1 Outline of Recirculation Test apparatus

3.2.2 Autoclave Test Apparatus

The autoclave test apparatus is designed to meet the functional requirements of the test parameters during the short term high temperature (>212°F) transient period. The functional aspects of the autoclave are as follows:

1. The main component of the system is a stainless steel autoclave vessel. The test vessel has a 10 liters inner volume.

2. The test vessel maintains a liquid environment, as would be expected in a post-LOCA containment vessel.

3. The test vessel controls the liquid temperature at the range of 120 to 284 ^{o}F (±5 ^{o}F).

4. The autoclave has no provision for spray. The test coupons will be submerged to conservatively represent the spray conditions.

5. The liquid volume and sample surface areas are based on scaling considerations that relate the test conditions to actual plant conditions.

The as-built test apparatus consists of a test vessel, a sampling tube, several isolation valves, and pipes that connect the major components, as shown schematically in Figure 3.2-2.

P and T represent pressure and temperature, respectively.

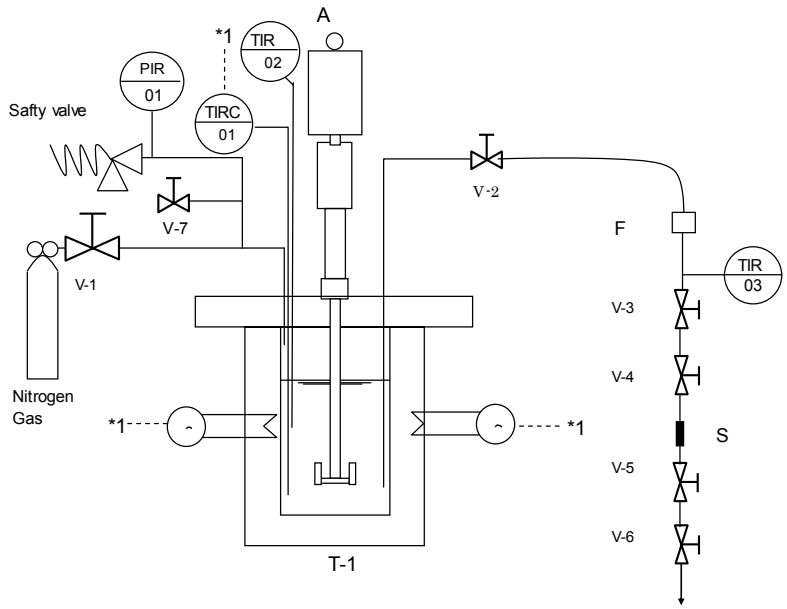

T−1	Test Vessel
TIRC−01	Test Water Temperature Indicater/Recorder/Controler
TIR−02	Test Water Temperature Indicater/Recorder
TIR−03	Test Water outlet Temperature Indicater/Recorder
PIR−01	Test Vessel Pressure Indicater/Controler/Recorder
V−1	Nitrogengas suplying
V−2	valve
F	Filter
V−3	valve
V−4	valve
V−5	valve
V−6	valve
V−7	valve
S	Sampling Tube
A	Mixing motor and imperer

Figure 3.2-2 Outline of Autoclave Test apparatus

3.3 Test Program and Guidelines

3.3.1 Test Program

3.3.1.1 Recirculation Test

Based on the evaluation of parameters identified in Table 3.1-1, the liquid volume of the recirculation test facility used to perform the test will fix the specific values for each of the materials and the following test parameters:

Physical parameters:

• Water volume in the test tank:	264 gallon
• Circulation flow:	0 – 52.8 gpm
• Spray flow:	0 – 7.9 gpm
• Recirculation sump temperature[1)]:	149°F

Chemistry parameters:

• Boron concentration of Sump Water[2)]:	3200 ppm B
• Sodium tetraborate concentration[3)]:	14 gram/liter
• HCL concentration:	100 ppm HCL
• LiOH concentration:	0.7 ppm Li

Notes:

1) Temperature of test run 149°F is constant temperature.
2) Boron concentration is average boron concentration of recirculation sump water and RCS coolant before NaTB dosing.
3) NaTB concentration is determined from NaTB dose quantity and minimum volume of recirculation sump water plus RCS coolant.

3.3.1.2 Autoclave Test

Based on the evaluation of parameters identified in Table 3.1-1, the liquid volume of the autoclave test facility used to perform the test will fix the specific values for each of the materials and the following test parameters:

Physical parameters:
- Water volume in the test vessel: 7 liters
- Circulation flow: existence (by mixing impeller)
- Liquid temperature: max 284°F

Chemistry parameters:
- Boron concentration of recirculation sump Water: 3200-4200 ppm B
- Sodium tetraborate concentration: 0-40 gram/liter
- HCL concentration: 0-50 ppm HCL
- LiOH concentration: 0.7 ppm Li
- Estimated pH: 4-8

The test program defined by this test plan includes six (6) autoclave test runs for transient period. The parameters of each run are described in Table 3.3-1.

Table 3.3-1 Autoclave Test Run Conditions

Run	Temp[1)] (°F)	Buffering Agent	Boron (ppmB) [2)]	NaTB (gram/liter) [3)]	pH[4)]
1	149	H_3BO_3	4200	0	4
2	149	H_3BO_3+NaTB	3200	14	8
3	149	H_3BO_3+NaTB	3200	40	8
4	284	H_3BO_3	4200	0	4
5	284	H_3BO_3+NaTB	3200	14	8
6	284	H_3BO_3+NaTB	3200	40	8

Note. 1) Temperature of test run 284°F is maximum temperature, and temperature of test run 149°F is constant temperature as compatible test.
2) Boron concentration is initial boron concentration of recirculation sump water before NaTB dosing.
3) NaTB concentration is determined from NaTB dose quantity and minimum recirculation sump water volume.
4) Estimated values

3.3.2 Test coupon preparation

The following guidance is given for the preparation of coupons to be used in the tests identified in this test plan.

(1) Metallic Coupons
Test coupons should be prepared using the recommended practices outlined in ASTM G1 (Ref. 6), as applicable. This practice describes accepted procedures for and factors that influence laboratory immersion corrosion tests, particularly mass loss tests. These factors include specimen preparation, apparatus, test conditions, methods of cleaning specimens, evaluation of results, and calculation and reporting of corrosion rates. This practice also emphasizes the importance of recording all pertinent data and provides a checklist for reporting test data. As noted previously, to minimize the number of individual coupons used in testing, the coupon sizing may depart from those specified in the procedures above. This is considered acceptable practice as determination of corrosion rate data is considered to be of secondary importance to other stated test objectives. Procedures shall be developed outlining the process used to clean, handle and identify the materials used in the experiment.

(2) Fiberglass
The fiberglass shall be retained in wire mesh sample baskets fabricated from fine (~1/16-inch stainless steel mesh) strainers with small, removable sample containers, is recommended. The sample containers shall allow for adequate flow around all surfaces and not restrict flow through the fiberglass. The submerged fiberglass should be inserted below the metallic coupons where flow can pass through it.

(3) Concrete Samples
Concrete coupons are to be located in both the submerged and non-submerged region. To facilitate placement of the 12” x 12” x1” concrete coupon only one coupon will be placed in the submerged rack for the recirculation test. Since it is all submerged, it is conservatively exposed to the recirculation sump fluid for the entire duration of the test run.

(4) Concrete particulate
Particulate material simulating mass of latent containment debris is to be added to the fluid in the test tank as follows:
• Concrete particulate (simulating 170lbm)
The particulate material should be shaken into the test tank after all of the chemical additions have been completed and the tank temperature has reached 149°F, but before insertion of the fiberglass and sample coupons.

3.3.3 Test operation

The general practices for testing given in a portions of ASTM G4 and G31 (Ref. 7) shall be used, as applicable, to perform the test. Detailed test procedures or instructions shall be developed.

3.3.3.1 Recirculation Test

The following general sequence of events is to be followed for the testing:

1) The cleanliness of the test loop shall be verified. Between test runs the loop shall be cleaned in accordance with applicable portions of ASTM A 380-99 (Ref. 8), Standard Practice for Cleaning, Descaling, and Passivation of Stainless Steel Parts, Equipment, and Systems. No observable scale or sediment shall be present in the test tank or loop piping, and the loop water conductivity (after cleaning) shall be < 5 mS/m and turbidity shall be < 0.3NTU.

2) The preparation (pre-mix) tank shall be filled with demineralized water, heat and chemicals added and adjusted as required for the initial test run conditions temperature. The chemical analysis of the demineralized water and preparation tank water shall be recorded.

3) The sample coupons and other test material (insulation, debris) shall be placed onto the test sample racks inside the recirculation test tank.

4) The preparation (pre-mix) conditioned water will be transferred into the test tank (this takes approximately 10 minutes).

5) The temperature of the system and flow rates shall be adjusted to the required operating temperature and flow rates. Once established, record the test time and this becomes t = 0.

6) Operation of the test loop shall be performed with conditions representative of postulated post-LOCA conditions, including:

A temperature of 149°F, ± 5°F

Recirculation flow rate of max. 52.8 gpm, ± 3gpm

Spray flow rate of max. 7.9 gpm, ± 2gpm

Test tank water level 2.6 ft (tentatively)

7) Fluid sampling shall be performed at 24 hour intervals. Sample size for filtered and unfiltered fluid shall be limited to 250 ml each for the circulating test.

8) The fluid level shall be monitored daily. Provisions should be established to determine the change in fluid volume versus fluid level. It is intent to not add fluids after the start of the test to make up removed liquid from sampling and vaporization. However, to factor into the analysis, the volume of fluid lost shall be necessary.

3.3.3.2 Autoclave Test

The following general sequence of events is to be followed for the testing:

1) The cleanliness of the test vessel shall be verified. Between test runs the vessel shall be cleaned in accordance with applicable portions of ASTM A 380-99, Standard Practice for Cleaning, Descaling, and Passivation of Stainless Steel Parts, Equipment, and Systems. No observable scale or sediment shall be present in the test vessel, and the vessel water conductivity (after cleaning) shall be < 5 mS/m and turbidity shall be < 0.3NTU.

2) The sample coupons and other test material (insulation, debris) shall be placed into the test sample racks and inserted into the test vessel.

3) The preparation (pre-mix) vessel shall be filled with demineralized water and chemicals added and adjusted as required for the initial test run conditions. The chemical analysis of the demineralized water and test water shall be recorded.

4) Transfer the contents from the pre-mix tank to the autoclave.

5) The autoclave shall be set to operating temperature and establish t = 0 once temperature is achieved.

6) The autoclave shall be operated to achieve the required temperature profile provided in Figure 3.3-1.

Increase temperature of liquid in the vessel from room temperature to 284°F within approximately 2hours.
A temperature of liquid in the vessel shall be kept at 284°F, ± 5°F in 1hour.

Decrease temperature of liquid in the vessel following 100 hours and establish t=end.

7) Samples shall be obtained every 24 hours during test run except low pH test which samples shall be obtained every 4 hours until 12 hours over. Sample size for liquid shall be limited to 20-25 ml for the autoclave test.

Figure 3.3-1 Autoclave test liquid temperature profile (estimated)

3.3.4 Test Termination Criteria

The criteria for termination are based on the following:

1. The first long time core cooling test will run for 30 days.

2. Maximum duration of long time core cooling test is limited to 30 days. Duration of subsequent test runs following the initial run will be determined after evaluating the results of the first run, and will consider establishing steady state conditions.

3. Maximum duration of the autoclave test will be limited to 100 hours.

4. Low pH test of the autoclave test might be terminated after 12hours which time is designed as limit time of NaTB dosing to maintain the recirculation sump water pH higher than 7 at early period of post-LOCA.

3.4 Examination of Test Samples

Since the purpose of this test program is to identify the type and mass of corrosion products that may form in the post-LOCA environment, it is essential that all masses of all species are accounted for in the experiment. The locations of these species can be on the surface of the metallic coupons, on the surface of the fiberglass samples, as precipitate in the tank, and in solution.

3.4.1 Test coupon Examination

Coupons used in the test should be weighed and photographed before and after testing. Prior to weighing, the coupons shall be dried to remove moisture from the attached corrosion products.
These records and the coupons are to be retained for later use.

3.4.2 Fiberglass Sample Examination

Similarly, the fiberglass samples used in the test should be weighed and photographed before and after testing. Specific attention is to be given to possible collection of gelatinous material on the surface of the fiberglass. Prior to weighing, the coupons shall be dried to remove moisture. These records and the fiberglass samples are to be retained for later use.

3.4.3 Precipitate/Sediment Examination

Sediment characterization includes, as appropriate and feasible determining the mass and volume collected, determination of constituents (e.g., fiberglass, latent particulate, precipitate, etc.), whether amorphous or crystalline, elemental composition and speciation. Specific direction concerning characterization shall be provided jointly by the project managers/test program leads.

3.4.4 Fluid Sample Examination

Analyses of fluids shall be performed to characterize dissolved material in the test loop and environments of loop chemistry. For elements whose concentration may vary during a test run, frequent analyses shall be performed. These elements include Al, B, Ca, Cu, Fe, Ni, Si, Mg, Na, and Zn.

For all grab samples, a visual assessment (color, suspended material, etc.) of the sample shall be noted as soon as possible after the sample is taken from the test loop.

In preparation for collecting a grab sample, the sample line shall be flushed with a minimum volume equivalent to three sample line lengths. To assure a representative sample, the flow rate used during line flushing and sampling shall be sufficient to assure flow is sufficient to maintain all species in suspension in the sample line. Excess solution removed from the loop during sampling shall be collected and returned to the loop.

The volume of sample to be removed shall be sufficient to measure pH, turbidity and boron concentration on the unfiltered sample and to allow for filtration of an appropriate volume of solution through a 0.45 micron filter for collection of suspended material. A small amount of the

grab sample fluid will be set aside for other analyses.

The sample for filtration should be filtered as rapidly as possible after collection to assure that precipitation of any material has not resulted from a decrease in sample temperature. The filtered material should be dried and weighed. The filtrate shall be collected and stored at ambient temperature in a sealed container and observed for at least 1 week to determine if precipitates form upon standing.

A sample should be evaluated as rapidly as possible after collection for the existence of gelatinous material in the grab sample fluid. One possible method of evaluation is to measure the viscosity of the sampled fluid.

Samples shall be stabilized for future ICP analyses.

4.0 QUALITY ASSURANCE

This test will be performed under the quality assurance program of Takasago R&D Center that satisfies Appendix-B to 10 CFR Part 50, 10 CFR Part 21 and is approved by Nuclear Energy Systems Quality and Safety Management Department of MHI.

5.0 DOCUMENTATION

The following documentation shall be prepared and retained as lifetime record.

Test Procedures

Test procedures document details of testing, test hardware, test facility, instrumentation, calibration, operating procedures, materials handling instructions, data acquisition and recording, etc.

Test Report

Test report documents testing performed meeting the requirements of the test plan. The report will include:

- Detailed description of the testing and results including test logs, raw data, and plots and graphs of key parameters over the duration of the experiment.
- Traceable documentation to the materials used in the testing
- Certification for required instruments/software used during the testing
- Non-conformances

Material and Examination Report

This report will document the examination of the fluid and materials from the experiment.

6.0 SCHEDULE

The currently planned schedule of the test is summarized in Table 6.0-1.

Table 6.0-1 Test Schedule

Year	2008								
Month	4	5	6	7	8	9	10	11	12
Test Plan									
Equipment Design									
Manufacturing & Setting									
Chemical Effect Test									
-Measurement System Set up									
-Measurement and Analyses									
-Test Result Assessment and Report Preparation									

7.0 REFERENCES

1. Generic Letter 2004-02, Potential Impact of Debris Blockage on Emergency Recirculation during Design Basis Accidents at Pressurized Water Reactors, September 2004

2. NEI-04-07 Sump Performance Task Force, Pressurized Water Reactor Sump Performance Evaluation Methodology, Revision 0, Volume and 1 and 2, December 2004

3. NUREG/CR-6914, Integrated Chemical Effects Test Project: Consolidated Data Report, Volume 1, U.S. Nuclear Regulatory Commission, 2006

4. LOCA Mass and Energy Release Analysis Code Applicability Report for US-APWR, MUAP-07012-NP(R2), May 2008

5. Design Control Document For The US-APWR“ (Chapter 6), MUAP-DC006(R1), Aug.2008, MHI

6. ASTM G1-03 ; Standard Practice for Preparing, Cleaning, and Evaluating Corrosion Test Specimens, 2003

7. ASTM G31-72(2004) ; Standard Practice for Laboratory Immersion Corrosion Testing of Metals, 1972

8. ASTM A380-99 ; Standard Practice for Cleaning, Descaling and Passivation of Stainless Steel Part, Equipment and Systems, 1999