Table of Contents

10.0 Steam and Power Conversion System 10–4

10.1 Summary Description 10–4

10.2 Turbine-Generator 10–4
- 10.2.1 Design Bases 10–4
- 10.2.2 General Description 10–4
- 10.2.3 Turbine Rotor Integrity 10–4
- 10.2.4 Safety Evaluation 10–5
- 10.2.5 References 10–5

10.3 Main Steam Supply System 10–5
- 10.3.1 Design Bases 10–5
- 10.3.2 System Description 10–5
- 10.3.3 Safety Evaluation 10–5
- 10.3.4 Inspection and Testing Requirements 10–6
- 10.3.5 Secondary Side Water Chemistry Program 10–6
- 10.3.6 Steam and Feedwater System Materials 10–6
- 10.3.7 References 10–7

10.4 Other Features of Steam and Power Conversion System 10–7
- 10.4.1 Main Condensers 10–7
- 10.4.2 Main Condenser Evacuation System 10–8
- 10.4.3 Turbine Gland Sealing System 10–8
- 10.4.4 Turbine Bypass System 10–8
- 10.4.5 Circulating Water System 10–8
- 10.4.6 Condensate Polishing System 10–15
- 10.4.7 Condensate and Feedwater System 10–15
- 10.4.8 Steam Generator Blowdown System (PWR) 10–15
- 10.4.9 Emergency Feedwater System 10–15

© 2007-2008 UniStar Nuclear Services, LLC in and to the Reference COLA, namely all text not in brackets
© 2007-2008 Union Electric Company d/b/a AmerenUE in and to all Callaway site specific and
AmerenUE specific COLA material, namely all text in brackets.
All rights reserved. COPYRIGHT PROTECTED

List of Tables

Table 10.4-1—{Circulating Water System Cooling Tower Design Specifications} 10–16

© 2007-2008 UniStar Nuclear Services, LLC in and to the Reference COLA, namely all text not in brackets
© 2007-2008 Union Electric Company d/b/a AmerenUE in and to all Callaway site specific and
AmerenUE specific COLA material, namely all text in brackets.
All rights reserved. COPYRIGHT PROTECTED

List of Figures

Figure 10.4-1—{Circulating Water System P & ID (Circulating Water Pump Building)}. 10–17
Figure 10.4-2—{Circulating Water System P & ID (Turbine Building)}. 10–18
Figure 10.4-3—{Circulating Water System Pump Intake Structure (Plan View)} 10–19
Figure 10.4-4—{Circulating Water System Pump Intake Structure (Section View)} 10–20
Figure 10.4-5—{Circulating Water System P & ID Cooling Towers} 10–21
Figure 10.4-6—{Circulating Water System P & ID Blowdown Flowpath} 10–22
Figure 10.4-7—{Circulating Water System Plant Discharge}. 10–23

© 2007-2008 UniStar Nuclear Services, LLC in and to the Reference COLA, namely all text not in brackets
© 2007-2008 Union Electric Company d/b/a AmerenUE in and to all Callaway site specific and
AmerenUE specific COLA material, namely all text in brackets.
All rights reserved. COPYRIGHT PROTECTED

10.0 STEAM AND POWER CONVERSION SYSTEM

This chapter of the U.S. EPR Final Safety Analysis Report (FSAR) is incorporated by reference with supplements as identified in the following sections.

The U.S. EPR FSAR includes the following COL Item in Section 10.0:

> A COL applicant that references the U.S. EPR design certification will select Sections 10.1, 10.2 and 10.4.7 or 10.1A, 10.2A and 10.4.7A for inclusion in the COL FSAR as applicable to the chosen turbine-generator design option.

This COL Item is addressed as follows:

An Alstom turbine generator will be used. This is the reference design reflected in U.S. EPR FSAR Sections 10.1, 10.2, and 10.4.7. U.S. EPR FSAR Sections 10.1A, 10.2A and 10.4.7A and associated COL Items are not discussed further in this FSAR.

10.1 SUMMARY DESCRIPTION

This section of the U.S. EPR FSAR is incorporated by reference.

10.2 TURBINE-GENERATOR

This section of the U.S. EPR FSAR is incorporated by reference with the following supplements.

10.2.1 DESIGN BASES

No departures or supplements.

10.2.2 GENERAL DESCRIPTION

No departures or supplements.

10.2.3 TURBINE ROTOR INTEGRITY

No departures or supplements.

10.2.3.1 Materials Selection

The U.S. EPR FSAR includes the following COL Item in Section 10.2.3.1:

> A COL applicant that references the U.S. EPR design certification will provide applicable material properties of the turbine rotor after the site-specific turbine has been procured.

This COL Item is addressed as follows:

Following procurement of the {Callaway Plant Unit 2} turbine generator, {AmerenUE} shall submit to the NRC the applicable material properties of the turbine rotor.

© 2007-2008 UniStar Nuclear Services, LLC in and to the Reference COLA, namely all text not in brackets
© 2007-2008 Union Electric Company d/b/a AmerenUE in and to all Callaway site specific and
AmerenUE specific COLA material, namely all text in brackets.
All rights reserved. COPYRIGHT PROTECTED

10.2.3.2 Fracture Toughness

The U.S. EPR FSAR includes the following COL Item in Section 10.2.3.2:

> A COL applicant that references the U.S. EPR design certification will provide applicable turbine disk rotor specimen test data, load-displacement data from the compact tension specimens and fracture toughness properties after the site-specific turbine has been procured.

This COL Item is addressed as follows:

Following procurement of the {Callaway Plant Unit 2} turbine generator, {AmerenUE} shall submit to the NRC the applicable turbine disk rotor specimen test data, load-displacement data from the compact tension specimens and the fracture toughness properties to demonstrate that the associated information and data presented in the U.S. EPR FSAR is bounding.

10.2.3.3 High Temperature Properties

No departures or supplements.

10.2.3.4 Turbine Rotor Design

No departures or supplements.

10.2.3.5 Turbine Rotor Preservice Inspections and Testing

No departures or supplements.

10.2.3.6 Turbine Rotor Inservice Inspection Program Plan

No departures or supplements.

10.2.4 SAFETY EVALUATION

No departures or supplements.

10.2.5 REFERENCES

No departures or supplements.

10.3 MAIN STEAM SUPPLY SYSTEM

This section of the U.S. EPR FSAR is incorporated by reference with the following supplements.

10.3.1 DESIGN BASES

No departures or supplements.

10.3.2 SYSTEM DESCRIPTION

No departures or supplements.

10.3.3 SAFETY EVALUATION

No departures or supplements.

© 2007-2008 UniStar Nuclear Services, LLC in and to the Reference COLA, namely all text not in brackets
© 2007-2008 Union Electric Company d/b/a AmerenUE in and to all Callaway site specific and
AmerenUE specific COLA material, namely all text in brackets.
All rights reserved. COPYRIGHT PROTECTED

10.3.4 INSPECTION AND TESTING REQUIREMENTS

No departures or supplements.

10.3.5 SECONDARY SIDE WATER CHEMISTRY PROGRAM

The U.S. EPR FSAR includes the following COL Item in Section 10.3.5:

> A COL applicant that references the U.S. EPR design certification will identify the authority responsible for implementation and management of the secondary side water chemistry program.

This COL Item is addressed as follows:

{Callaway Unit 2} shall implement the secondary side water chemistry program described in Section 10.3.5 of the U.S. EPR FSAR. The {Operations Manager} is the authority responsible for implementation and management of the secondary side water chemistry program.

10.3.6 STEAM AND FEEDWATER SYSTEM MATERIALS

10.3.6.1 Material Selection and Fabrication

No departures or supplements.

10.3.6.2 Fracture Toughness

No departures or supplements.

10.3.6.3 Flow-Accelerated Corrosion (FAC)

The U.S. EPR FSAR includes the following COL Item in Section 10.3.6.3:

> The COL applicant that references the U.S. EPR design certification will develop a FAC condition monitoring program that is consistent with Generic Letter 89-08 and NSAC-202L-R3 for the carbon steel portions of the steam and power conversion systems that contain water or wet steam.

This COL Item is addressed as follows:

{Callaway Unit 2} shall implement a Flow Accelerated Corrosion (FAC) program that provides a structured, logical approach to identifying locations in the steam and power conversion system that could be susceptible to degradation of pressure boundary thickness due to erosion/corrosion (EC) and flow conditions.

Multiple criteria are identified, which alone or in combination can create conditions where erosion/corrosion will result from process flow conditions. These criteria include process fluid characteristics (water, steam, two-phase, chemical characteristics), process flow rate, flow path configuration (straight pipe, elbow, valve body, elevation change, etc.), temperature, pressure, duty cycles or cycling of conditions (variations in temperature, pressure, steam quality or wetness, etc.), pressure boundary mechanical stresses (e.g., temperature-induced pipe growth), and materials of construction.

These criteria are evaluated using industry operating experience and applied initially in the design of the main steam and power conversion system to identify locations that are susceptible to FAC. Adjustments are made to pipe routing and component locations, as

© 2007-2008 UniStar Nuclear Services, LLC in and to the Reference COLA, namely all text not in brackets
© 2007-2008 Union Electric Company d/b/a AmerenUE in and to all Callaway site specific and
AmerenUE specific COLA material, namely all text in brackets.
All rights reserved. COPYRIGHT PROTECTED

possible, to minimize flow velocities and turbulence. In addition, water chemistry requirements are established and materials of construction are selected to further limit contributing factors.

The criteria are then applied to the final as-built arrangement to identify locations that may be susceptible and determine a relative level of susceptibility. Once the plant is in operation, each of those locations is inspected by visual or volumetric methods on a frequency proportional to the presumed level of susceptibility.

The water chemistry program for the steam and power conversion system is focused on prevention of corrosion, and is thus integral to the control of FAC. The site specific FAC Program utilizes the guidance of NSAC-202L-R3, "Recommendations for an Effective Flow Accelerated Corrosion Program" (EPRI, 2006). Emphasis is placed on control of dissolved impurities that contribute to corrosion and removal of corrosion products. Water chemistry is discussed in Section 10.3.5.

Inspection results are recorded and trended throughout the plant's operating life. As data are accumulated for each location, the actual existence of FAC, or lack thereof, can be established as well as the rate of pressure boundary reduction in thickness. With this information, the frequency of inspections can be adjusted as appropriate to assure accurate understanding of the physical condition and maintenance of the required minimum wall thickness, design margins of safety, and piping integrity. In addition, necessary repairs or replacements, including material changes, can be accomplished in a planned and efficient manner.

Lessons learned through the program are applied to the program itself, and to other systems, programs and/or situations as may be appropriate.

The FAC Program encompasses the following systems: Main Steam, Condensate, Feedwater, Extraction Steam, Cold and Hot Re-Heat Steam, Heater Drains, MSR Drains, Steam Dump System, and Steam Generator Blowdown.

10.3.7 REFERENCES

{EPRI, 2006. "Recommendations for an Effective Flow-Accelerated Corrosion Program," NSAC-202L-R3, Electric Power Research Institute, 2006.}

10.4 OTHER FEATURES OF STEAM AND POWER CONVERSION SYSTEM

This section of the U.S. EPR FSAR is incorporated by reference with the following supplements.

10.4.1 MAIN CONDENSERS

No departures or supplements.

10.4.1.1 Design Basis

No departures or supplements.

10.4.1.2 System Description

The U.S. EPR FSAR includes the following COL Item in Section 10.4.1.2:

> The COL applicant that references the U.S. EPR design certification will describe the site-specific main condenser materials.

© 2007-2008 UniStar Nuclear Services, LLC in and to the Reference COLA, namely all text not in brackets
© 2007-2008 Union Electric Company d/b/a AmerenUE in and to all Callaway site specific and
AmerenUE specific COLA material, namely all text in brackets.
All rights reserved. COPYRIGHT PROTECTED

This COL Item is addressed as follows:

The site-specific main condenser for {Callaway Plant Unit 2 is comprised of stainless steel tubes and stainless steel tube sheet.}

The U.S. EPR FSAR includes the following COL Item in Section 10.4.1.2:

> The COL applicant that references the U.S. EPR design certification will describe the site-specific design pressure and test pressure for the main condenser.

This COL Item is addressed as follows:

The site-specific design pressure and test pressure for the {tube side of the} main condenser at {Callaway Plant Unit 2 are 100 psig (690 kPa-gauge) and 150 psig (1034 kPa-gauge), respectively.}

10.4.1.3 Safety Evaluation

No departures or supplements.

10.4.1.4 Inspection and Testing Requirements

No departures or supplements.

10.4.1.5 Instrumentation Requirements

No departures or supplements.

10.4.2 MAIN CONDENSER EVACUATION SYSTEM

No departures or supplements.

10.4.3 TURBINE GLAND SEALING SYSTEM

No departures or supplements.

10.4.4 TURBINE BYPASS SYSTEM

No departures or supplements.

10.4.5 CIRCULATING WATER SYSTEM

No departures or supplements.

10.4.5.1 Design Basis

No departures or supplements.

10.4.5.2 System Description

10.4.5.2.1 General Description

The U.S. EPR FSAR includes the following COL Item in Section 10.4.5.2.1:

> A COL applicant that references the U.S. EPR design certification will provide the description of the site-specific portions of the CWS.

© 2007-2008 UniStar Nuclear Services, LLC in and to the Reference COLA, namely all text not in brackets
© 2007-2008 Union Electric Company d/b/a AmerenUE in and to all Callaway site specific and
AmerenUE specific COLA material, namely all text in brackets.
All rights reserved. COPYRIGHT PROTECTED

This COL Item is addressed as follows:

The U.S. EPR uses a Circulating Water Supply System (CWS) to dissipate heat. {The CWS at Callaway Plant Unit 2 is a closed-loop system. The Callaway Plant Unit 2 system uses two natural draft cooling towers for heat dissipation.

The CWS dissipates up to 1.108E+10 BTU/hr (2.792E+09 Kcal/hr) of waste heat rejected from the main condenser and the Auxiliary Cooling Water System (ACWS) during normal plant operation at full station load. The Piping and Instrument Diagrams (P&IDs) for the Callaway Plant Unit 2 CWS are provided as Figure 10.4-1 and Figure 10.4-2. Figure 10.4-1 shows the system at the cooling towers and Figure 10.4-2 shows the system inside the Turbine Building. The CWS has four 25% capacity vertical mixed flow column circulating water pumps housed in the circulating water pump building adjacent to the cooling towers. These pumps circulate water through the system.

In the Turbine Building, the majority of the CWS flow is directed through the main condenser, where the water removes (primarily) latent heat of vaporization from the turbine exhaust steam. The water travels through the three condenser shells (tube side), which are arranged in series, and then returns to the CWS cooling towers via the CWS return piping.

Additionally, two 100% capacity auxiliary cooling water system pumps receive cooling water from the CWS and deliver the water to the CLCWS heat exchangers. Heat from the CLCWS is transferred to the auxiliary cooling water system and heated auxiliary cooling water is returned to the CWS downstream of the main condenser.

The heated CWS water is sent to the spray headers of the cooling towers. After passing through the cooling towers, the cooled water is recirculated back to circulating water pump building to complete the closed cycle cooling water loop. The CWS has nominal flow rate of approximately 806,730 gpm (3,053,500 lpm).

Circulating Water System Cooling Tower design specifications are provided in Table 10.4-1. The circulating water pump structure is shown in Figure 10.4-3 and Figure 10.4-4. The cooling towers are shown in Figure 10.4-5.

Evaporation in the cooling towers increases the level of solids in the circulating water. To control solids, a portion of the recirculated water is removed or blown down and replaced with clean water. In addition to the blowdown and evaporative losses, a small percentage of water in the form of droplets (drift) is lost from the cooling towers. Peak anticipated evaporative losses are approximately 19,924 gpm (75,412 lpm). Maximum drift losses are about 8 gpm (31 lpm) based upon 0.001% of the CWS nominal flow rate. Makeup water is required to replace the losses from evaporation, blowdown and drift.

Maximum makeup water for the Callaway Plant Unit 2 CWS is taken from the collector well system by pumps at a rate of approximately 34,305 gpm (129,844 lpm). This rate is based on maintaining level in the ESWEMS pond, and the ESW and CWS systems while operating at 3 cycles of concentration in the CWS system. Vertical turbine pumps transfer water from the Collector Well River Intake System to the Water Treatment Plant (WTP). After treatment, the water is routed to the ESWEMS pond, and the ESW and CWS systems for makeup. The raw water supply to the WTP is discussed in Section 9.2.9.

© 2007-2008 UniStar Nuclear Services, LLC in and to the Reference COLA, namely all text not in brackets
© 2007-2008 Union Electric Company d/b/a AmerenUE in and to all Callaway site specific and
AmerenUE specific COLA material, namely all text in brackets.
All rights reserved. COPYRIGHT PROTECTED

Blowdown from the cooling tower discharges by gravity via a 36" pipeline to the Missouri River. Discharge temperature is monitored prior to discharge into the river. The blowdown flowpath is shown in Figure 10.4-6. The outfall piping is shown in Figure 10.4-7.

The CWS chemical treatment system provides a means for adding chemicals to the circulating water system to maintain circulating water system chemistry within established limits to minimize fouling, inhibit scaling on the heat exchange surfaces, to control growth of bacteria, and to inhibit corrosion of piping materials.}

In addition, this COL Item is addressed by replacing the conceptual design information identified in double brackets in U.S. EPR FSAR Section 10.4.5 with plant specific information as discussed in the following sections.

10.4.5.2.2 Component Description

Cooling Towers

The U.S. EPR FSAR includes the following conceptual design information in Section 10.4.5.2.2 for the Cooling Towers:

> [[The CWS has mechanical draft cooling towers, each with a basin and circulating water sump. Each sump houses a circulating water pump. The sumps are designed to provide sufficient submergence of the pump suction. Trash racks or suction screens are provided to prevent the ingestion of debris.]]

The above conceptual design information is replaced with site-specific information as follows:

{The Callaway Unit 2 cooling towers are natural draft cooling towers. The tower structures are approximately 414 ft (126 m) in diameter at the base and 550 ft (168 m) tall.

Heat dissipation from the circulating water system to the ambient air (primarily latent heat transfer with some sensible heat transfer) occurs by direct contact between the rising air and the circulating water falling from the tower spray nozzles.

The tower fill redirects the water falling through the tower into thin vertically oriented films, which maximizes surface area of water in contact with surrounding air. A natural draft caused by the difference in temperature and air density between the top and bottom of the tower shell (stack effect) forces the air from the tower vicinity into the tower, upward through the fill and falling water, and through the exit at the top of the tower.

The tower basins are located below the tower structures and serve as the collection point for the CWS cold water after it has fallen through each tower. Both cooling tower basins drain through flumes to a common pump bay, which is shaped and sloped to serve as the suction point for the circulating water system pumps. The basin is sized to meet pump suction head requirements, to prevent formation of harmful vortices at the pump suctions, and to provide sufficient volume to allow draindown of the circulating water system without overflow with the basin initially at the maximum operating water level. Basin level is controlled by a level control system.

Table 10.4-1 provides cooling tower design specification information.}

© 2007-2008 UniStar Nuclear Services, LLC in and to the Reference COLA, namely all text not in brackets
© 2007-2008 Union Electric Company d/b/a AmerenUE in and to all Callaway site specific and
AmerenUE specific COLA material, namely all text in brackets.
All rights reserved. COPYRIGHT PROTECTED

Circulating Water Pumps

The U.S. EPR FSAR includes the following conceptual design information in Section 10.4.5.2.2 for the Circulating Water Pumps:

> [[The circulating water pumps are constant speed, vertical shaft type. The pumps are designed to operate under normal plant operating load conditions. Each pump has its suction located in its own pump bay. The pumps are designed to permit reverse flow.]]

The above conceptual design information is replaced with site-specific information as follows:

{Four 25% capacity vertical turbine pumps, each approximately 201,700 gpm (763,500 lpm), are used to provide flow for the circulating water system. The pumps draw water from the cooling tower basin and deliver it to the circulating water supply pipe. Each pump is driven by a motor rated at approximately 9,600 HP (7.2 MW). The pumps are sized to provide sufficient head to overcome energy losses due to friction, piping elevation changes, and static head requirements for the cooling tower.}

Cooling Tower Makeup System

The U.S. EPR FSAR includes the following conceptual design information in Section 10.4.5.2.2 for the Cooling Tower Makeup System:

> [[The cooling tower makeup system is site-specific and will be designed to provide adequate makeup flow to the cooling tower basins.]]

The above conceptual design information is replaced with site-specific information as follows:

{The Callaway Unit 2 CWS makeup system (Collector Well River Intake System) functions to replace CWS water losses due to evaporation, blowdown, and drift associated with the cooling tower as well as leakage and seepage losses from the basin and system piping and components. Makeup rate is controlled by the tower basin level control system and the makeup system control valves. The Callaway Unit 2 raw water makeup is described in FSAR Section 9.2.9.}

Chemical Treatment System

The U.S. EPR FSAR includes the following conceptual design information in Section 10.4.5.2.2 for the Chemical Treatment System:

> [[Water treatment for the CWS is based on site makeup water chemistry, blowdown requirements, environmental regulations and system materials.]]

The above conceptual design information is replaced with site-specific information as follows:

{Chemical treatment system pumps, valves, tanks, instrumentation, and controls provide the means of monitoring water chemistry and adding required chemicals into the CWS in order to minimize corrosion, prevent scale formation, and limit biological fouling.

Chemicals used in the system are compatible with materials used for piping and component wetted surfaces.}

The U.S. EPR FSAR includes the following COL Item in Section 10.4.5.2.2 for the Chemical Treatment System:

© 2007-2008 UniStar Nuclear Services, LLC in and to the Reference COLA, namely all text not in brackets
© 2007-2008 Union Electric Company d/b/a AmerenUE in and to all Callaway site specific and
AmerenUE specific COLA material, namely all text in brackets.
All rights reserved. COPYRIGHT PROTECTED

> A COL applicant that references the U.S. EPR design certification will provide the specific chemicals used to support the chemical treatment system as determined by the site-specific water conditions.

This COL Item is addressed as follows:

The specific chemicals and addition rates used in the system are determined and adjusted as required by evaluation of periodic water chemistry analyses.

{Chemical Treatment System

The chemicals used at Callaway Unit 2 can be divided into six basic categories based on function:

- biocide - sodium hypochlorite/sodium bromide
- algaecide - non-oxidizing biocide
- pH adjuster - sulfuric acid
- corrosion inhibitor - for mild steel and yellow metal
- scale inhibitor - phosphonate
- silt dispersant - copolymer

Residual chlorine is measured to monitor the effectiveness of biocide treatment and to ensure the plant discharge meets the National Pollution Discharge Elimination System (NPDES) discharge limits}.

Cooling Tower Blowdown System

The U.S. EPR FSAR includes the following conceptual design information in Section 10.4.5.2.2 for the Cooling Tower Blowdown System:

> [[The cooling tower blowdown system is site-specific, and along with the makeup system will be designed to maintain the concentration of dissolved solids in the CWS within acceptable limits.]]

The above conceptual design information is replaced with site-specific information as follows:

{The nonsafety-related CWS blowdown system consists of piping, valves, and associated instrumentation and controls that convey water from the CWS cooling tower basins to the Missouri River. Blowdown rate from the cooling towers is controlled by a control valve.

At Callaway Plant Unit 2, the outfall is an important component of the circulating water system. Discussion of this component is provided below as a supplement to the U.S. EPR FSAR.

Circulating Water System Outfall

The discharge pipe is capable of handling the discharge for both Callaway Plant Unit 1 and Callaway Plant Unit 2. The CWS outfall consists of a discharge line with a check valve located an acceptable distance from the river bank. Figure 10.4-7 provides a plan and section view of the discharge outfall.}

© 2007-2008 UniStar Nuclear Services, LLC in and to the Reference COLA, namely all text not in brackets
© 2007-2008 Union Electric Company d/b/a AmerenUE in and to all Callaway site specific and AmerenUE specific COLA material, namely all text in brackets.
All rights reserved. COPYRIGHT PROTECTED

Piping and Valves

The U.S. EPR FSAR includes the following conceptual design information in Section 10.4.5.2.2 for the Piping and Valves:

> [[A butterfly valve is installed downstream of each circulating water pump.]] Isolation valves are installed at the inlets of the low pressure condenser water box and outlets of the high pressure condenser water box. [[Each cooling tower riser also has a butterfly valve that serves to isolate the cooling tower during maintenance activities. The butterfly valves contained in the CWS are designed to operate under normal plant operating load conditions. Valve opening and closing times are chosen to reduce water hammer effects.]]

The above conceptual design information is replaced with site-specific information for the plant as follows:

{The U.S. EPR FSAR description provided above is applicable to the Callaway Plant Unit 2 CWS and is incorporated by reference.}

The U.S. EPR FSAR includes the following COL Item in Section 10.4.5.2.2 for Piping and Valves:

> A COL applicant that references the U.S. EPR design certification will provide the site-specific CWS piping design pressure.

This COL Item is addressed as follows:

{The Callaway Plant Unit 2 CWS piping design pressure is 100 psig (690 kPa-gauge).}

Vacuum Breaker

No departures or supplements.

Condenser Tube Cleaning System

No departures or supplements.

Vacuum Priming System

The U.S. EPR FSAR includes the following COL Item in Section 10.4.5.2.2 for the Vacuum Priming System:

> If a vacuum priming system is required, a COL applicant that references the U.S. EPR design certification will provide the site-specific information.

This COL Item is addressed as follows:

{A vacuum priming system is not required at Callaway Plant Unit 2.}

Vents and Drains

No departures or supplements.

10.4.5.2.3 System Operation

{This section of the U.S. EPR FSAR is incorporated by reference with the following supplements.

© 2007-2008 UniStar Nuclear Services, LLC in and to the Reference COLA, namely all text not in brackets
© 2007-2008 Union Electric Company d/b/a AmerenUE in and to all Callaway site specific and
AmerenUE specific COLA material, namely all text in brackets.
All rights reserved. COPYRIGHT PROTECTED

Callaway Plant Unit 2 uses natural draft cooling towers. Therefore, no cooling tower fans are available to be switched off during normal operations, as unit load is decreased, and at lower-than-design wet bulb temperatures.

Since Callaway Plant Unit 2 uses natural draft cooling towers, abnormal operation for Callaway Plant Unit 2 will not include loss of cooling towers, which is associated with mechanical draft cooling towers.}

10.4.5.3 Safety Evaluation

The U.S. EPR FSAR includes the following conceptual design information in Section 10.4.5.3:

> [[Means are provided to prevent or detect and control flooding of safety-related areas so that the intended safety function of a system or component will not be diminished due to leakage from the CWS.]]
>
> [[Malfunction or failure of a component or piping in the CWS, including an expansion joint, will not produce unacceptable adverse effects on the functional performance capabilities of safety-related systems or components.]]

The above conceptual design information is replaced with site-specific information as follows:

{Internal flooding of the Turbine Building due to an unisolable break or crack in a circulating water system pipe or failure of a CWS component, including expansion joints, does not result in damage to safety-related SSCs. Below the main steam piping penetrations, no direct pathway through which flooding could spread exists between the Turbine Building and adjacent structures that house safety-related SSCs. No safety-related SSCs reside in the Turbine Building. Flooding exiting the Turbine Building at grade is directed away from structures that house safety-related SSCs by site grading, so external flooding resulting from a failure in the CWS does not adversely affect safety related SSCs.

The cooling towers are located more than 600 ft (183 m) away from any safety-related structures.}

10.4.5.4 Inspection and Testing Requirements

No departures or supplements.

10.4.5.5 Instrumentation Requirements

The U.S. EPR FSAR includes the following conceptual design information in Section 10.4.5.5:

> [[Pressure is measured at the discharge of each circulating water pump. Temperature is measured at the condenser inlet and outlet for each tube bundle.]] The circulating water is also monitored for pH and conductivity. [[Permanent flowmeters measure individual circulating pump flow and total flow to the turbine condenser. Access ports allow temporary flowmeters to be installed in the main circulating water piping. Cooling tower basin level is monitored and used to control makeup flow. Blowdown is manually adjusted as required to maintain desired water chemistry.]]

The above conceptual design information is replaced with site-specific information as follows:

{Instrumentation and controls for the CWS include provisions for remote and local control and monitoring of parameters such as pressure, temperature, flow, etc. Motor temperature sensors

© 2007-2008 UniStar Nuclear Services, LLC in and to the Reference COLA, namely all text not in brackets
© 2007-2008 Union Electric Company d/b/a AmerenUE in and to all Callaway site specific and
AmerenUE specific COLA material, namely all text in brackets.
All rights reserved. COPYRIGHT PROTECTED

mounted at various locations in the motors along with bus power and breaker position provide remote control, indication, and alarm of the circulating water pumps.

The opening and closing of motor operated valves located at each pump's discharge; on the cooling tower bypass; at the inlet and outlet of the condensers and at various other points within the process system are remotely controlled and monitored, but can be manually operated via valve mounted hand wheels.

System temperature, pressure and flow are monitored in each of the circulating water pump discharge lines as well as at various other points. The cooling tower basin level is controlled by varying the makeup water flow as monitored by the basin level control system. Blowdown flow rate is monitored and controlled by adjusting the position of the blowdown isolation valve. Differential pressure across the pump inlet screen provides indication of fouling.}

10.4.5.6 References

No departures or supplements.

10.4.6 CONDENSATE POLISHING SYSTEM

No departures or supplements.

10.4.7 CONDENSATE AND FEEDWATER SYSTEM

No departures or supplements.

10.4.8 STEAM GENERATOR BLOWDOWN SYSTEM (PWR)

No departures or supplements.

10.4.9 EMERGENCY FEEDWATER SYSTEM

No departures or supplements.

© 2007-2008 UniStar Nuclear Services, LLC in and to the Reference COLA, namely all text not in brackets
© 2007-2008 Union Electric Company d/b/a AmerenUE in and to all Callaway site specific and
AmerenUE specific COLA material, namely all text in brackets.
All rights reserved. COPYRIGHT PROTECTED

Table 10.4-1—{Circulating Water System Cooling Tower Design Specifications}

Design Conditions	Natural Draft Cooling Tower
Number of Towers	2
Heat Load	1.108E+10 BTU/hr (2.792E+09 Kcal/hr)
Circulating Water	806,730 gpm (3,053,805 lpm)
Cycles of Concentration—Normal	4.8
Evaporative losses	19,924 gpm (75,412 lpm)
Blowdown rate	4,667 gpm (17,666 lpm)
Drift Rate	<0.001%
Drift losses	8 gpm (31 lpm)
Approximate Dimensions—Height	550 ft (168 m)
Approximate Dimensions—Diameter	414 ft (126 m) (at the base)
Design Dry Bulb Temperature	95°F (35°C) (summer)
Design Wet Bulb Temperature	79°F (26.1°C) (summer)
Design Range	28°F (15.6°C)
Design Approach	11°F (6.1°C)
Air Flow Rate (at ambient design point)	69,064,000 cfm (1,955,675 m^3/min)

© 2007-2008 UniStar Nuclear Services, LLC in and to the Reference COLA, namely all text not in brackets
© 2007-2008 Union Electric Company d/b/a AmerenUE in and to all Callaway site specific and
AmerenUE specific COLA material, namely all text in brackets.
All rights reserved. COPYRIGHT PROTECTED

Figure 10.4-1—{Circulating Water System P & ID (Circulating Water Pump Building)}

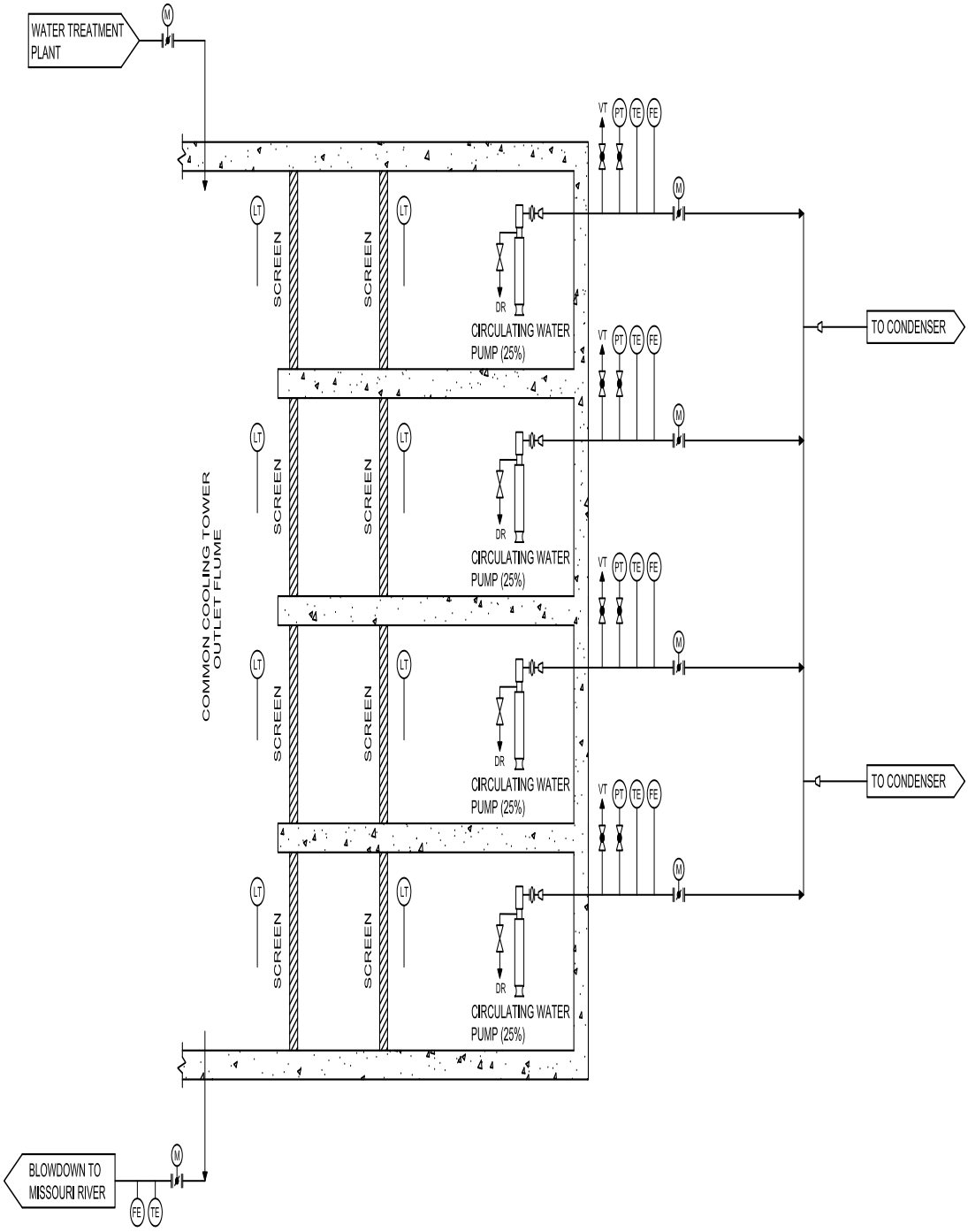

© 2007-2008 UniStar Nuclear Services, LLC in and to the Reference COLA, namely all text not in brackets
© 2007-2008 Union Electric Company d/b/a AmerenUE in and to all Callaway site specific and
AmerenUE specific COLA material, namely all text in brackets.
All rights reserved. COPYRIGHT PROTECTED

Figure 10.4-2—{Circulating Water System P & ID (Turbine Building)}

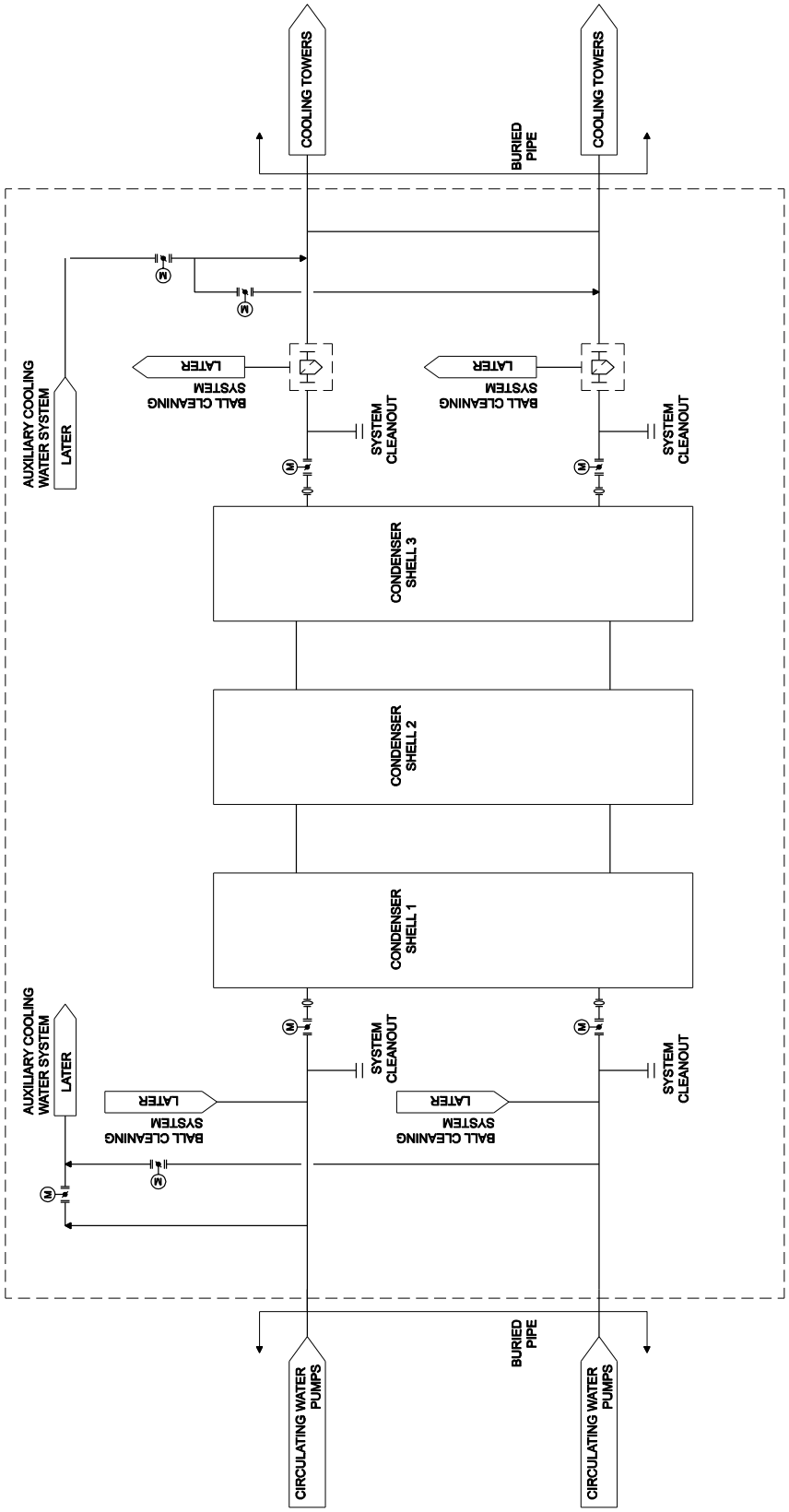

© 2007-2008 UniStar Nuclear Services, LLC in and to the Reference COLA, namely all text not in brackets
© 2007-2008 Union Electric Company d/b/a AmerenUE in and to all Callaway site specific and
AmerenUE specific COLA material, namely all text in brackets.
All rights reserved. COPYRIGHT PROTECTED

Figure 10.4-3—{Circulating Water System Pump Intake Structure (Plan View)}

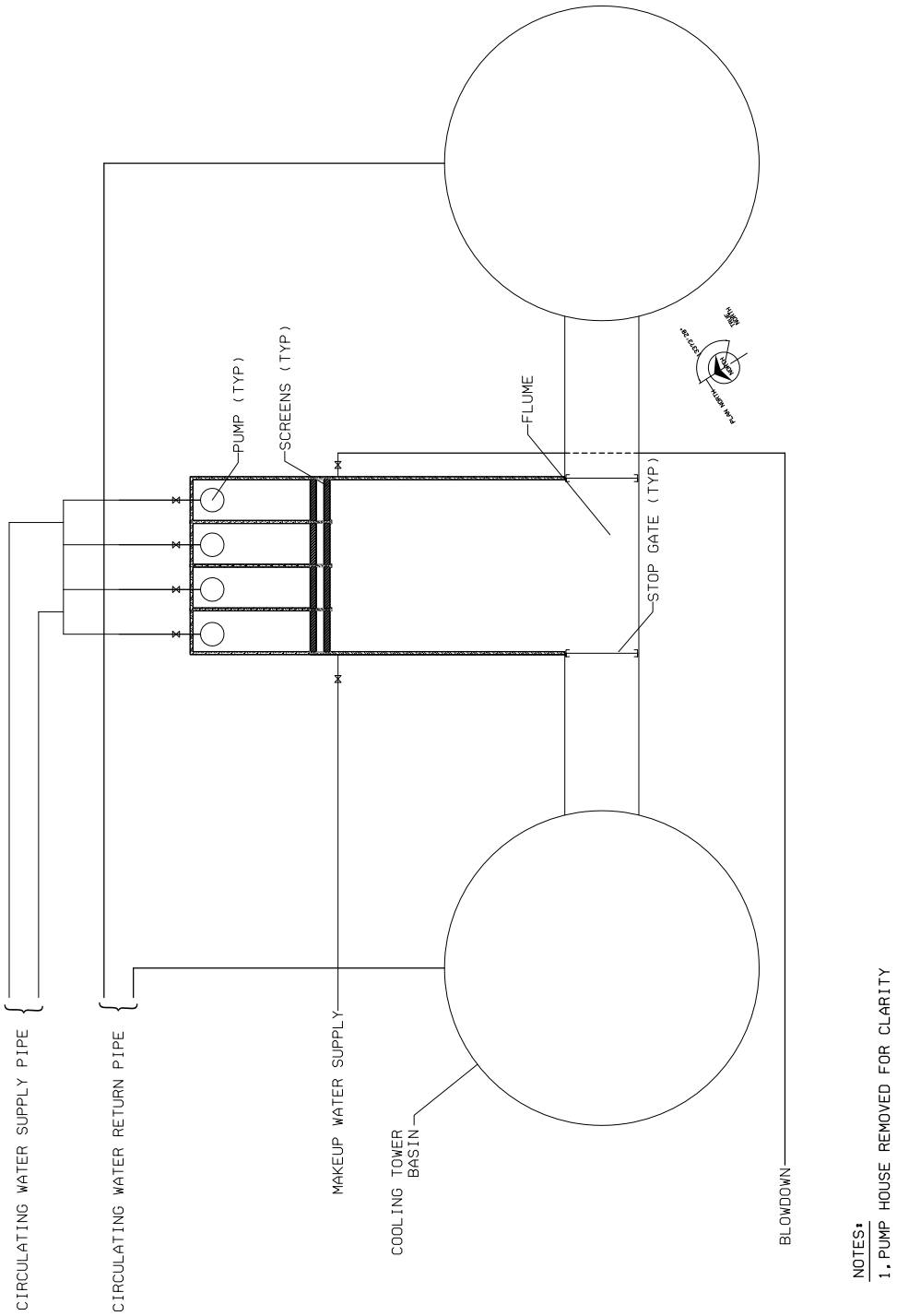

© 2007-2008 UniStar Nuclear Services, LLC in and to the Reference COLA, namely all text not in brackets
© 2007-2008 Union Electric Company d/b/a AmerenUE in and to all Callaway site specific and
AmerenUE specific COLA material, namely all text in brackets.
All rights reserved. COPYRIGHT PROTECTED

Figure 10.4-4—{Circulating Water System Pump Intake Structure (Section View)}

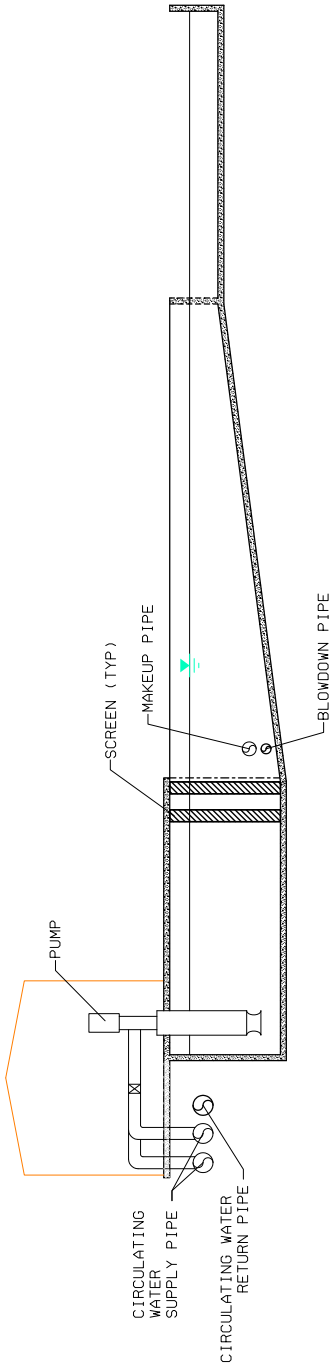

© 2007-2008 UniStar Nuclear Services, LLC in and to the Reference COLA, namely all text not in brackets
© 2007-2008 Union Electric Company d/b/a AmerenUE in and to all Callaway site specific and
AmerenUE specific COLA material, namely all text in brackets.
All rights reserved. COPYRIGHT PROTECTED

Figure 10.4-5—{Circulating Water System P & ID Cooling Towers}

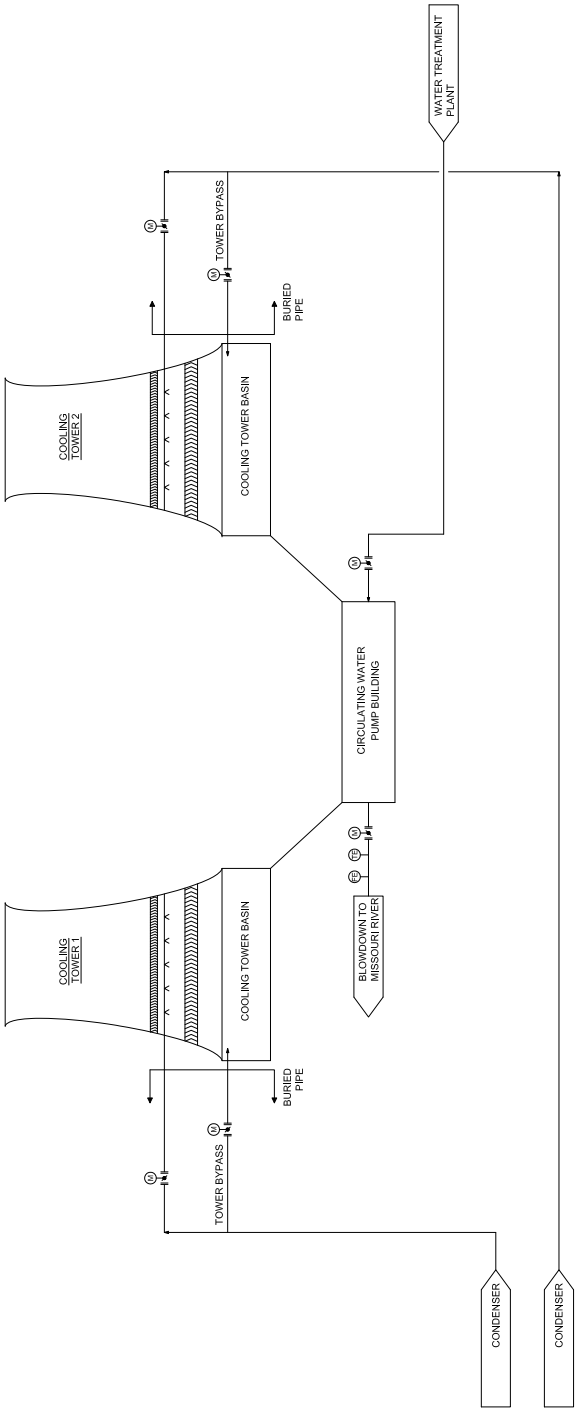

© 2007-2008 UniStar Nuclear Services, LLC in and to the Reference COLA, namely all text not in brackets
© 2007-2008 Union Electric Company d/b/a AmerenUE in and to all Callaway site specific and
AmerenUE specific COLA material, namely all text in brackets.
All rights reserved. COPYRIGHT PROTECTED

Figure 10.4-6—{Circulating Water System P & ID Blowdown Flowpath}

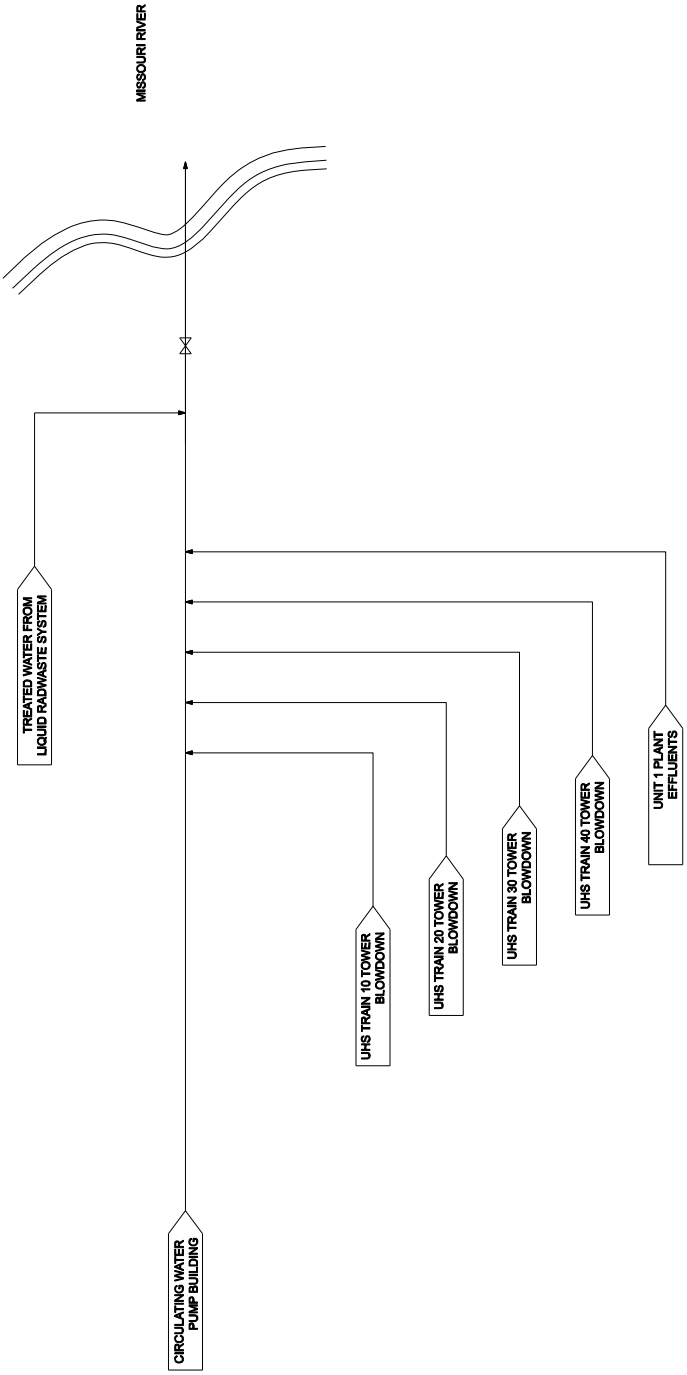

© 2007-2008 UniStar Nuclear Services, LLC in and to the Reference COLA, namely all text not in brackets
© 2007-2008 Union Electric Company d/b/a AmerenUE in and to all Callaway site specific and
AmerenUE specific COLA material, namely all text in brackets.
All rights reserved. COPYRIGHT PROTECTED

Figure 10.4-7—{Circulating Water System Plant Discharge}

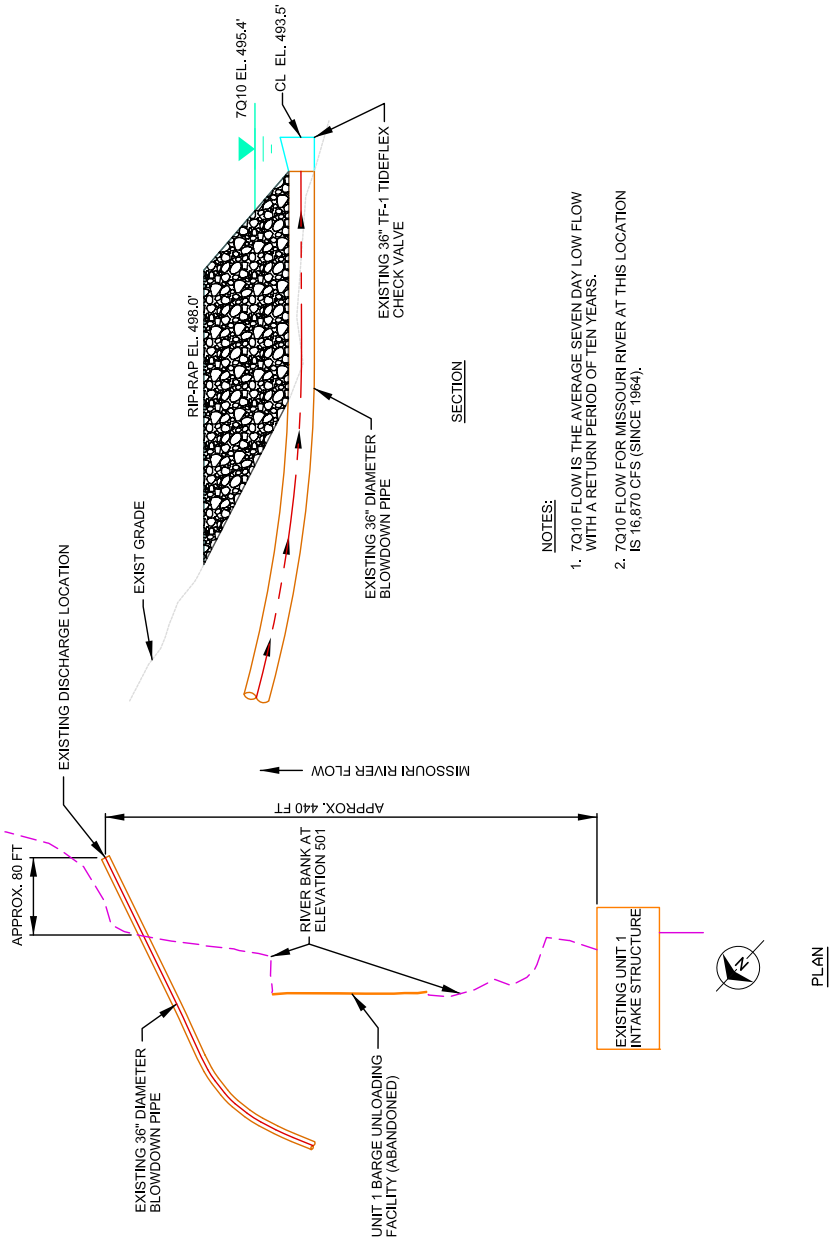

06362483 3

© 2007-2008 UniStar Nuclear Services, LLC in and to the Reference COLA, namely all text not in brackets
© 2007-2008 Union Electric Company d/b/a AmerenUE in and to all Callaway site specific and
AmerenUE specific COLA material, namely all text in brackets.
All rights reserved. COPYRIGHT PROTECTED