Step 1: Identify Internal Events PRA Sequences to be Included (and those to be excluded) in the Fire PRA Model

INITIATING EVENTS IN THE PRA MODEL					
Initiator	**Average Frequency (per yr)**	**Description**	**Accident Sequence or Event Tree Model**	**Address in Fire PRA Model? (Y or N)**	**Comments**
%T1	7.23E-01	Reactor Trip	Transient Event Tree	Y	
%T2	9.33E-02	Loss of Condenser Vacuum	Transient Event Tree	Y	
%T3	4.13E-01	Turbine trip	Transient Event Tree	Y	
%T4	3.73E-02	Loss of Main Feedwater	Transient Event Tree	Y	
%T5P	4.25E-02	Loss of Offsite Power (Plant-Centered)	Transient Event Tree	Y	
%T5C	1.02E-02	Loss of Off-Site Power (Grid-Related)	Transient Event Tree	N	Grid-related loss of offsite power due to internal fire is highly unlikely
%T5D	6.26E-03	Loss of Off-Site Power (Weather-Induced)	Transient Event Tree	N	Weather-induced loss of offsite power due to internal fire is highly unlikely
%T6	7.35E-03	Steamline/Feed line Break Upstream of Main Steam Isolation valves	Main Steamline Break Event	Y	Fire-induced pipe break is not likely. However, stuck-open SG PORV/atmospheric relief valve could result in uncontrolled cooldown.

INITIATING EVENTS IN THE PRA MODEL					
Initiator	**Average Frequency (per yr)**	**Description**	**Accident Sequence or Event Tree Model**	**Address in Fire PRA Model? (Y or N)**	**Comments**
		or Downstream of Feedwater Isolation Valves (Includes Stuck-Open Secondary relief valves)	Tree		
%T7	5.44E-03	Steamline Break Downstream of Main Steam isolation valves (Includes Stuck-Open Secondary relief valves)	Main Steamline Break Event	Y	Fire-induced pipe break is not likely. However, condenser steam dump valve(s) could result in uncontrolled cooldown.
%T8	2.94E-04	Loss of 4160 V Bus 1	Transient Event Tree	Y	
%T9	2.94E-04	Loss of 4160 V Bus A	Transient Event Tree	Y	
%T10	2.94E-04	Loss of 4160 V Bus B	Transient Event Tree	Y	
%T11	2.94E-04	Loss of 4160 V Bus 2	Transient Event Tree	Y	
%T12	3.00E-03	Loss of 125 VDC Bus A	Transient Event Tree	Y	
%T13	3.00E-03	Loss of 125 VDC Bus B	Transient Event Tree	Y	
%T15	Fault Tree	Loss of CCW System	Transient	Y	

INITIATING EVENTS IN THE PRA MODEL					
Initiator	**Average Frequency (per yr)**	**Description**	**Accident Sequence or Event Tree Model**	**Address in Fire PRA Model? (Y or N)**	**Comments**
	Model %T15-INIT		Event Tree		
%T16	Fault Tree Model %T16-INIT	Loss of Service Water System	Transient Event Tree	Y	
%T17	Fault Tree Model %T17-INIT	Loss of Instrument Air	Transient Event Tree	Y	
%T21	3.41E-02	Closure of MSIV (1 SG Loop)	Transient Event Tree	Y	
%T22	1.24E-02	Closure of both MSIVs	Transient Event Tree	Y	
%T23	1.78E-01	Partial Load Rejection	Transient Event Tree	Y	
%T24	5.79E-02	Spurious Steam Gen. Isolation Signal	Transient Event Tree	Y	
%T25	7.23E-02	Reactor Trip With PORV Opening/Demand	Transient Event Tree	Y	
%T26	Fault Tree Model %T26-INIT	Loss of Power from120 VAC Buses A & B	Transient Event Tree	Y	
%S	6.8E-03	Small LOCA (pipe breaks and RCP seal	Small LOCA	See comment	Fire-induced pipe break or passive RCP seal failure is unlikely. However, portion of small

INITIATING EVENTS IN THE PRA MODEL					
Initiator	**Average Frequency (per yr)**	**Description**	**Accident Sequence or Event Tree Model**	**Address in Fire PRA Model? (Y or N)**	**Comments**
		LOCA)	Event Tree		LOCA event tree likely needed to treat transient-induced small LOCA from Transient Event Tree such as the pressurizer PORV demanded and stuck-open or RCP seal LOCA via loss of RCP seal cooling.
%M	9.60E-06	Medium LOCA (pipe breaks)	Medium LOCA Event Tree	See comment	Fire-induced pipe break is unlikely. For our simplified plant, any transient-induced LOCA is considered small. If in another plant, a transient-induced medium LOCA could occur based on one or more events (e.g., a single but large size PORV or multiple PORVs spuriously opening), then a portion of the medium LOCA event tree may be needed.
%A	7.77E-05	Large LOCA (pipe breaks)	Large LOCA Event Tree	See comment	Fire-induced pipe break is unlikely. For our simplified plant, any transient-induced LOCA is considered small. If in another plant, a transient-induced large LOCA could occur based on one or more events (e.g., a single but large size PORV or multiple PORVs spuriously opening), then a portion of the large LOCA event tree may be needed.
%R	7.93E-03	Steam Generator Tube Rupture	SGTR Event Tree	N	Fire-induced rupture of SG tubes is highly unlikely.
%I2	2.000E-07	Interfacing Systems LOCA at RCS/RHR Interface (2 MOVs in series)	ISLRHR Sequence (single event model)	Y	Spurious opening of both RHR suction valves could result in ISLOCA. Since power to the inboard valve is racked out, a 3-phase hot short would be required to open that valve. Consideration of 3-phase hot shorts is

INITIATING EVENTS IN THE PRA MODEL					
Initiator	**Average Frequency (per yr)**	**Description**	**Accident Sequence or Event Tree Model**	**Address in Fire PRA Model? (Y or N)**	**Comments**
					required for high-consequence lines.
%I3	Fault Tree Model I3QINIT	Interfacing Systems LOCA at RCS/CCW interface (Reactor Coolant Pump Cooler rupture)	ISLCCW Sequence	N	Fire-induced ISLOCA highly unlikely via a passive rupture of the RCP Cooler
%VR	2.70E-07	Reactor Vessel Rupture	Single Event in Master Fault Tree	N	Fire-induced rupture of the reactor vessel is highly unlikely

ACCIDENT SEQUENCE OR EVENT TREE MODELS IN THE PRA				
Accident Sequence or Event Tree Model	**Description**	**Additional Details**	**Address in Fire PRA Model? (Y or N)**	**Comments**
TRA	Transient	Includes transient-induced LOCAs such as stuck-open PORV and RCP seal LOCA	Y	
SLOCA	Small LOCA	Pipe breaks & RCP seal LOCA	See comment	Fire-induced pipe break or passive RCP seal failure is unlikely. However, portion of small LOCA event tree likely needed to treat transient-induced small LOCA from Transient Event Tree such as the pressurizer PORV demanded and stuck-open or RCP seal LOCA via loss of RCP seal cooling.
MLOCA	Medium LOCA	Pipe breaks	See comment	Fire-induced pipe break is unlikely. For our simplified plant, any transient-induced LOCA is considered small. If in another plant, a transient-induced medium LOCA could occur based on one or more events (e.g., a single but large size PORV or multiple PORVs spuriously opening), then a portion of the medium LOCA event tree may be needed.
LLOCA	Large LOCA	Pipe breaks	See comment	Fire-induced pipe break is unlikely. For our simplified plant, any transient-induced LOCA is considered small. If in another plant, a transient-induced large LOCA could occur based on one or more events (e.g., a single but large size PORV or multiple PORVs spuriously opening), then a portion of

				the large LOCA event tree may be needed.
ATWS	Anticipated Transients Without Scram	Reactor Protection System fails safe on loss of power. Trip circuits are highly redundant and confirmed to be physically separated.	N	Fire-induced failure of the reactor protection system is highly unlikely.
SGTR	Steam Generator Tube Rupture		N	Fire-induced rupture of SG tubes is highly unlikely.
MSLB	Main Steamline Break	Includes spurious opening of secondary relief valves.	Y	Fire-induced pipe break is not likely. However, stuck-open SG PORV/atmospheric relief valve or condenser steam dump valve(s) could result in uncontrolled cooldown.
ISLCCW	Interfacing Systems LOCA at RCS/CCW interface	Rupture of Reactor Coolant Pump Cooler	N	Requires passive failure of RCP cooler – not likely coincident with fire.
ISLRHR	Interfacing Systems LOCA at RCS/RHR Interface	Fire-induced opening of RHR suction valves	Y	Spurious opening of both RHR suction valves could result in ISLOCA
New	Spurious Safety Injection with HPI	Requires multiple spurious valve openings and possibly 2nd pump start	See comment	Need to check on potential to cause such an event and the number of spurious events required. Likely to cause reactor trip (manual or automatic on high pressure) if is not or cannot be terminated by operator. Could cause subsequent LOCA.
New	Feedwater ramp-up or AFW spurious start	May require multiple spurious events (need to check)	See comment	Need to check on potential to cause such an event and the number of spurious events required. Likely to cause reactor trip (manual or automatic such as on steam/feed mismatch) if is not or cannot be terminated by operator. Could cause damage to AFW-B pump.

New	RWST drain down event	Requires combination of either or both MOV-5,6 with either or both MOV-3,4 spuriously opening.	See comment	Need to check on potential to cause such an event and the number of spurious events required. Likely to cause procedure-driven manual reactor trip due to loss of initial safety injection water supply / LCO condition for HPI.

Step 2: Review of the Internal Events PRA Against the Fire Safe Shutdown Analysis

TABLE 1: SYSTEMS IN PRA MODEL				
System	**Description**	**Additional Details**	**Address in Fire PRA Model? (Y or N)**	**Comments**
RCS	Reactor Coolant System	PORV for pressure relief and feed & bleed. Stuck-open PORV causes small LOCA.	Y	
CVCS	Chemical and Volume Control System	Normal charging and letdown functions are not modeled. However, components required to isolate charging and letdown are modeled for HPI mode.	Y	Only includes isolation of letdown and charging for operation in HPI mode
HPI	High Pressure Injection System	The charging pumps in the CVCS also function as safety injection pumps.	Y	
RHR	Residual Heat Removal System	Shutdown cooling is not modeled	N	Will be the same as Internal events model
AFW	Auxiliary Feedwater System	Only Trains A and B are modeled	Y	
MFW	Main Feed Water	Would take considerable effort to get cables involved and their locations	N	Although credited in the PRA model, the cost of cable routing out weighs

TABLE 1: SYSTEMS IN PRA MODEL				
System	**Description**	**Additional Details**	**Address in Fire PRA Model? (Y or N)**	**Comments**
				the risk benefit.
MS	Main Steam System	Stuck-open secondary relief valves could cause equivalent of mainsteam line break.	Y	
CS	Containment Spray	Required for recirculation during LOCA	Y	
CF	Containment Fan Coolers	Required for recirculation during LOCA	Y	
CI	Containment Isolation	Modeled in LERF	Y	
ESFAS	Emergency Safeguards Actuation System		Y	
CCW	Component Cooling Water System		Y	
SW	Service Water System		Y	
AC	AC Power (all voltage	To extent power is needed to support	Y	To extent power is needed to support

TABLE 1: SYSTEMS IN PRA MODEL				
System	**Description**	**Additional Details**	**Address in Fire PRA Model? (Y or N)**	**Comments**
	levels)	equipment in the PRA.		equipment in the PRA.
DG	Emergency Diesel Generators		Y	
DC	DC Power	To extent power is needed to support equipment in the PRA.	Y	To extent power is needed to support equipment in the PRA.
IA	Instrument Air	Required for PORV and other valves. Backup nitrogen is provided for PORV and is what is credited.	Y	
HVAC-HPI	HVAC in HPI Pump Room	HVAC is required during 24-hr PRA mission	Y	

TABLE 2: SYSTEMS IN APPENDIX R				
System	**Description**	**Additional Details**	**Address in Fire PRA Model? (Y or N)**	**Comments**
RCS	Reactor Coolant System	PORV to prevent spurious opening and consequential small LOCA.	Y	But need in fire PRA for more than just ensuring closure for Appendix R.
CVCS	Chemical Volume and Control System	Normal charging and letdown functions are credited.	N	Normal charging and letdown functions are not credited in PRA. However isolation of letdown and normal charging is to be modeled for HPI mode.
RHR	Residual heat Removal System	Shutdown cooling is credited	N	Shutdown cooling not credited in PRA
AFW	Auxiliary Feedwater System	Trains A&C are credited	Y	Especially since will not credit MFW, crediting all trains of AFW in the Fire PRA may be important for 'realistic' risk estimates.
MS	Main Steam System	Secondary relief valves and MSIVs are included to prevent spurious opening causing uncontrolled secondary depressurization.	Y	Review from PRA perspective

TABLE 2: SYSTEMS IN APPENDIX R				
System	**Description**	**Additional Details**	**Address in Fire PRA Model? (Y or N)**	**Comments**
CCW	Component Cooling Water System		Y	
SW	Service Water System		Y	
AC	AC Power (all voltage levels)	But certain buses not credited (especially non-safety) if loads not otherwise required for safe shutdown	Y	Need to ensure all buses are included that are needed to support equipment to be modeled in the Fire PRA.
DG	Emergency Diesel Generators		Y	
DC	DC Power	But certain buses not credited (especially non-safety) if loads not otherwise required for safe shutdown	Y	Need to ensure all buses are included that are needed to support equipment to be modeled in the Fire PRA.
IA	Instrument Air	Required for PORV and other valves. Backup nitrogen is provided for PORV.	Y	

TABLE 2: SYSTEMS IN APPENDIX R				
System	**Description**	**Additional Details**	**Address in Fire PRA Model? (Y or N)**	**Comments**
RCS Instruments	RCS pressure, temperature, nuclear instrumentation, etc	Required for safe shutdown monitoring.	See comment	Include in model if instruments impact equipment or human failure events in the PRA. See Step 5.
Secondary Instruments	Steam Generator level, Streamline pressure, etc.	Required for safe shutdown monitoring.	See comment	Include in model if secondary instruments impact equipment or human failure events in the PRA. See Step 5.
HVAC-HPI	HVAC in HPI Pump Room	HVAC is required during 72-hr Appendix R mission	Y	Required for PRA during 24-hr mission. 72-hr mission is for cold shutdown and not part of PRA.
HVAC-AFW	HVAC in AFW Pump Room	HVAC is required during 72-hr Appendix R mission	N	72-hr mission is for cold shutdown and not part of PRA. Not required for PRA mission.

TABLE 3: LIST OF BASIC EVENTS IN MODEL	
Basic Event	**Description**
%I2	Interfacing Systems LOCA at RCS/RHR Interface (2 MOVs in series)
%I3	Interfacing Systems LOCA at RCS/CCW interface (Reactor Coolant Pump Cooler rupture)
%T15	LOSS OF COMPONENT COOLING WATER (CCW)
%T23	PARTIAL LOAD REJECTION
%T25	REACTOR TRIP WITH PORV OPENING
%T3	TURBINE TRIP
%T4	LOSS OF MAIN FEEDWATER
%T1	REACTOR TRIP
AFWA-FTR	AFWA fails to run
AFWA-FTS	AFWA fails to start
AFWB-FTR	AFWB fails to run
AFWB-FTS	AFWB fails to start
AOV-1_FTC	PORV AOV-1 fails to CLOSE
AOV-1_FTO	PORV AOV-1 fails to open
AOV-3_FTC	AOV-3 FAILS TO CLOSE

TABLE 3: LIST OF BASIC EVENTS IN MODEL	
Basic Event	**Description**
EPS-120VBUSAF	120V BUS A FAULT
EPS-120VBUSAINVF	FAILURE OF 120V BUS A INVERTER
EPS-125VDCBUSAF	FAULT ON 125V DC BUS A
EPS-125VDCBUSBF	FAULT ON 125V DC BUS B
EPS-125VDCPNLAF	FAULT ON 125V DC PANEL A
EPS-125VDCPNLBF	FAULT ON 125V DC PANEL B
EPS-480VLCAF	480V LOAD CENTER A FAULT
EPS-480VLCAXTF	480V LOAD CENTER A TRANSFORMER FAILS
EPS-480VLCBF	480V LOAD CENTER B FAULT
EPS-480VLCBXTF	480V LOAD CENTER B TRANSFORMER FAILS
EPS-480VMCCA1F	480V MCC A1 FAULT
EPS-480VMCCB1F	480V MCC B1 FAULT
EPS-4VBUSAF	4KV BUS A FAULT
EPS-4VBUSBF	4KV BUS B FAULT
EPS-BATA	FAILURE OF BATTERY A

TABLE 3: LIST OF BASIC EVENTS IN MODEL	
Basic Event	**Description**
EPS-BATB	FAILURE OF BATTERY B
EPS-BCAF	FAILURE OF BATTERY CHARGER A
EPS-BCBF	FAILURE OF BATTERY CHARGER B
EPS-DGAF	FAILURE OF DIESEL GENERATOR A
EPS-DGBF	FAILURE OF DIESEL GENERATOR B
HPIA_FTR	HPIA fails to run
HPIA_FTS	HPIA fails to start
HPIB_FTR	HPIB fails to run
HPIB_FTS	HPIB fails to start
MFWFAIL	MAIN FEEDWATER SYSTEM FAILURE AFTER REACTOR TRIP
MOV-10_FTO	MOV-10 fails to open
MOV-11_FTO	MOV-11 fails to open
MOV-14_FTO	MOV-14 FAILS TO OPEN
MOV-15_FTO	MOV-15 FAILS TO OPEN
MOV-1_FTO	MOV-1 FAILS TO OPEN

TABLE 3: LIST OF BASIC EVENTS IN MODEL	
Basic Event	**Description**
MOV-2_FTC	MOV-2 fails to close
MOV-3_FTO	MOV-3 fails to open
MOV-4_FTO	MOV-4 fails to open
MOV-5_FTC	MOV-5 fails to close
MOV-5_FTO	MOV-5 fails to open
MOV-6_FTC	MOV-6 fails to close
MOV-6_FTO	MOV-6 fails to open
MOV-9_FTO	MOV-9 FAILS TO OPEN
OPER-1	Operator fails to switch over to recirculation
OPER-4	Operator fails to establish feed and bleed cooling
OPER-7	OPERATOR FAILS TO TRIP REACTOR COOLANT PUMP
RCPSEAL	RCP SEAL LOCA GIVEN LOSS OF CCW AND SUCCESSFUL RCP TRIP
SUTF	FAILURE OF START-UP TRANSFORMER (SUT)
UATF	FAILURE OF UNIT AUXILIARY TRANSFORMER (UAT)

Continuation of Step2 and Including Steps 4 thru 6:

TABLE 4: DISPOSTION OF COMPONENTS IN PRA AND APPENDIX R (USE TABLES 1-3 AND FIGURES 1-3)						
Equipment ID	**Equipment Description**	**Power Supply**	**In PRA Model? (Y or N)**	**In Appendix R? (Y or N)**	**Add to Fire PRA Equipment List? (Y or N)**	**Comments**
HPI-A	High pressure safety injection pump A	4.16kV Bus A	Y	Y	Y	
HPI-B	High pressure safety injection pump B	4.16kV Bus B	Y	Y	Y	
RHR-B	RHR pump	4.16kV Bus B	N	Y	N	Not modeling shutdown cooling and spurious operation benign to credited functions (See Step 4)
COMP-1	Instrument air compressor	480 V LC 1	Y	Y	Y	To ensure long-term PORV operation
AFW-A	Motor driven AFW pump A	4.16kV Bus A	Y	Y	Y	
AFW-B	Steam driven AFW Pump B	N/A	Y	N	Y	
AFW-C	AFW Pump C	4.16 kV Bus 2	N	Y	Y	Credited in Appendix R. Will

TABLE 4: DISPOSTION OF COMPONENTS IN PRA AND APPENDIX R (USE TABLES 1-3 AND FIGURES 1-3)						
Equipment ID	**Equipment Description**	**Power Supply**	**In PRA Model? (Y or N)**	**In Appendix R? (Y or N)**	**Add to Fire PRA Equipment List? (Y or N)**	**Comments**
						be credited for the fire PRA
AOV-1 (SOV-1)	Pressure operated relief valve	120VAC Bus A	Y	Y (only to ensure remains closed)	Y	Need for both ensuring closure (does not spuriously open) and to open when needed for feed and bleed.
AOV-2 (SOV-2)	Letdown isolation valve	125 VDC Bus B	N	Y (for normal letdown)	Y	Especially for isolation when needed. See Step 4.
AOV-3 (SOV-3)	Charging pump injection valve	125 VDC Bus B	Y	Y (for normal charging)	Y	Especially for isolation when needed.
MOV-1	HPI valve	480V MCC A1	Y	N	Y	
MOV-2	VCT isolation valve	480V MCC B1	Y	Y (for normal suction to charging)	Y	Especially for isolation when needed.
MOV-3	Cont. sump recirc valve	480V MCC A1	Y	N	Y	Also see Step 4 for spurious operation concerns
MOV-4	Cont. sump recirc valve	480V MCC B1	Y	N	Y	Also see Step 4 for spurious

TABLE 4: DISPOSTION OF COMPONENTS IN PRA AND APPENDIX R (USE TABLES 1-3 AND FIGURES 1-3)						
Equipment ID	**Equipment Description**	**Power Supply**	**In PRA Model? (Y or N)**	**In Appendix R? (Y or N)**	**Add to Fire PRA Equipment List? (Y or N)**	**Comments**
						operation concerns
MOV-5	RWST isolation valve	480V MCC A1	Y	N	Y	Need to ensure both open and close when desirable
MOV-6	RWST isolation valve	480V MCC B1	Y	N	Y	Need to ensure both open and close when desirable
MOV-7	RHR inboard suction valve	480V MCC A1	Y (for ISLOCA)	Y (for shutdown cooling)	Y	PRA will not address shutdown cooling but need to address for fire-induced ISLOCA and possible high consequence event (see Step 6)
MOV-8	RHR outboard suction valve	480V MCC B1	Y (for ISLOCA)	Y (for shutdown cooling)	Y	PRA will not address shutdown cooling but need to address for fire-induced ISLOCA and possible high consequence event (see Step 6)
MOV-9	HPI valve	480V MCC B1	Y	N	Y	

TABLE 4: DISPOSTION OF COMPONENTS IN PRA AND APPENDIX R (USE TABLES 1-3 AND FIGURES 1-3)						
Equipment ID	**Equipment Description**	**Power Supply**	**In PRA Model? (Y or N)**	**In Appendix R? (Y or N)**	**Add to Fire PRA Equipment List? (Y or N)**	**Comments**
MOV-10	AFW discharge valve	480V MCC A1	Y	Y	Y	
MOV-11	AFW discharge valve	125 VDC Bus B	Y	N	Y	
MOV-13	PORV block valve	480V MCC A1	N	Y	Y	
MOV-14	AFW turbine steam line isolation valve	125 VDC Bus B	Y	N	Y	
MOV-15	AFW steam inlet throttle valve	125 VDC Bus B	Y	N	Y	
MOV-16	AFW test line isolation valve	480V MCC A1	N	N	N	Potential for significant flow diversion is small. See Step 4
MOV-17	AFW test line isolation valve	480V MCC B1	N	N	N	Potential for significant flow diversion is small. See Step 4
MOV-18	AFW C Pump Discharge	480 V MCC-2	N	Y	Y	
MOV-19	AFW test line isolation	480 V MCC-2	N	N	N	Potential for significant flow

TABLE 4: DISPOSTION OF COMPONENTS IN PRA AND APPENDIX R (USE TABLES 1-3 AND FIGURES 1-3)						
Equipment ID	**Equipment Description**	**Power Supply**	**In PRA Model? (Y or N)**	**In Appendix R? (Y or N)**	**Add to Fire PRA Equipment List? (Y or N)**	**Comments**
	valve					diversion is small. See Step 4.
V-12	CST isolation valve	N/A	N	Y (for admin purposes to ensure open)	N	Unlikely to be closed/plugged coincident with fire.
LI-1	RWST level	120VAC Bus A	N	Y	Y	See Step 5.
LI-2	RWST level	120VAC Bus B	N	Y	Y	See Step 5.
LI-3	Cont. sump level	120VAC Bus A	N	Y	Y	See Step 5.
LI-4	Cont. sump level	120VAC Bus B	N	Y	Y	See Step 5.
TI-1	Letdown heat exchanger outlet temp	120VAC Bus A	N	N	Y	See Step 5.
PT-1	RCS pressure	120VAC Bus B	N	N	Y	See Step 5.

TABLE 4: DISPOSTION OF COMPONENTS IN PRA AND APPENDIX R (USE TABLES 1-3 AND FIGURES 1-3)						
Equipment ID	**Equipment Description**	**Power Supply**	**In PRA Model? (Y or N)**	**In Appendix R? (Y or N)**	**Add to Fire PRA Equipment List? (Y or N)**	**Comments**
A-1	AFW motor high temp	120VAC Bus A	N	N	Y	See Step 5.
SWGR-A	Train A 4160 V Bus	SUT-1 EDG-A	Y	Y	Y	
SWGR-B	Train B 4160 V Bus	SUT-1 EDG-B	Y	Y	Y	
SWGR-1	Non-Safety 4160 V Bus	UAT-1 SUT-1	N	N	Y	
SWGR-2	Non-Safety 4160 V Bus	UAT-1 SUT-1	N	Y	Y	
SUT-1	Startup Transformer	OSP	Y	Y	Y	
EDG-A	Train A Emergency Diesel Generator	PNL-A	Y	Y	Y	
EDG-B	Train B Emergency Diesel Generator	PNL-B	Y	Y	Y	

TABLE 4: DISPOSTION OF COMPONENTS IN PRA AND APPENDIX R (USE TABLES 1-3 AND FIGURES 1-3)						
Equipment ID	**Equipment Description**	**Power Supply**	**In PRA Model? (Y or N)**	**In Appendix R? (Y or N)**	**Add to Fire PRA Equipment List? (Y or N)**	**Comments**
LC-1	Non-Safety 480 V Load Center	SST-1	N	N	Y	
LC-2	Non-Safety 480 V Load Center	SST-2	N	Y	Y	
LC-A	Train A 480 V Load Center	SST-A	Y	Y	Y	
LC-B	Train B 480 V Load Center	SST-B	Y	N	Y	
SST-1	Non-Safety Station Service Transformer	SWGR-1	N	N	Y	
SST-2	Non-Safety Station Service Transformer	SWGR-2	N	Y	Y	
SST-A	Train A Station Service Transformer	SWGR-A	Y	Y	Y	
SST-B	Train B Station Service Transformer	SWGR-B	Y	N	Y	

TABLE 4: DISPOSTION OF COMPONENTS IN PRA AND APPENDIX R (USE TABLES 1-3 AND FIGURES 1-3)						
Equipment ID	**Equipment Description**	**Power Supply**	**In PRA Model? (Y or N)**	**In Appendix R? (Y or N)**	**Add to Fire PRA Equipment List? (Y or N)**	**Comments**
MCC-1	Non-Safety 480 V Motor Control Center	LC-1	N	N	Y	
MCC-2	Non-Safety 480 V Motor Control Center	LC-2	N	Y	Y	
MCC-A1	Train A 480 V Motor Control Center	LC-A	Y	Y	Y	
MCC-B1	Train B 480 V Motor Control Center	LC-B	Y	N	Y	
BC-1	Non-Safety Swing Battery Charger	MCC-1 MCC-2	N	N	Y	
BC-A	Train A Battery Charger	MCC-A1	Y	N	Y	
BC-B	Train B Battery Charger	MCC-B1	Y	N	Y	
BAT-1	Non-Safety Battery	N/A	N	N	Y	
BAT-A	Train A Battery	N/A	Y	Y	Y	
BAT-B	Train B Battery	N/A	Y	Y	Y	

TABLE 4: DISPOSTION OF COMPONENTS IN PRA AND APPENDIX R (USE TABLES 1-3 AND FIGURES 1-3)						
Equipment ID	**Equipment Description**	**Power Supply**	**In PRA Model? (Y or N)**	**In Appendix R? (Y or N)**	**Add to Fire PRA Equipment List? (Y or N)**	**Comments**
DC BUS-1	Non-Safety 125 VDC Bus	BC-1 BAT-1	N	N	Y	
DC BUS-A	Train A 125 VDC Bus	BC-A BAT-A	Y	Y	Y	
DC BUS-B	Train B 125 VDC Bus	BC-B BAT-B	Y	Y	Y	
INV-A	Train A Inverter	DC BUS-A	Y	Y	Y	
INV-B	Train B Inverter	DC BUS-B	N	Y	Y	
VITAL-A	Train A 120 VAC Vital Bus	INV-A	Y	Y	Y	
VITAL-B	Train B 120 VAC Vital Bus	INV-B	N	Y	Y	
PNL-A	Train A 125 VDC Panel	DC BUS-A	Y	Y	Y	
PNL-B	Train B 125 VDC Panel	DC BUS-B	Y	Y	Y	

Step 3: Identify Fire-Induced Initiating Events Based on Equipment Affected

Will need to examine each fire compartment / analysis unit and determine based on the equipment and cables located there, which of the initiators (from Step 1 of Task 2) can be caused by a fire in that compartment / analysis unit. If any new initiators are identified, include in the Fire PRA. The Fire PRA will then include fires mapped to initiating events in the model. Each compartment / analysis unit should have a disposition with regard to the initiating event(s) that occur as a result of a fire in each location (even if “none”). Hold discussion with instructor.

Step 4: Identify Equipment with Potential Spurious Actuations that May Challenge the Mitigating Capability to be Credited

Considered spurious equipment operations	Description	PRA System or Function Possibly Affected	Comments/Disposition
MOV-16	AFW test line isolation valve	Failure of AFW-A due to flow diversion	Fire-induced spurious opening of MOV-16 could occur but flow diversion is not significant. Will not be modeled.
MOV-17	AFW test line isolation valve	Failure of AFW-B due to flow diversion	Fire-induced spurious opening of MOV-17 could occur but flow diversion is not significant. Will not be modeled.
MOV-19	AFW test line isolation valve	Failure of AFW-C due to flow diversion	Fire-induced spurious opening of MOV-19 could occur but flow diversion is not significant. Will not be modeled.
MOV-3	Cont. sump recirc. valve	Failure of high pressure injection	Fire-induced spurious opening of MOV-3 during HPI injection mode will fail HPI – need to model this failure.
MOV-4	Cont. sump recirc. valve	Failure of high pressure injection	Fire-induced spurious opening of MOV-4 during HPI injection mode will fail HPI – need to model this failure.
AOV-2	Letdown isolation valve	Failure of high pressure injection	Loss of CCW with failure to isolate letdown (such as spurious open signal) will result in HPSI pump cavitation
RHR	RHR pump	Spurious operation of pump – investigate effect on HPI & RHR	Could fail RHR pump (assuming no pump suction protection) but RHR shutdown cooling not modeled anyway. No adverse effect on high pressure injection. No need to model.

Step 5: Identify Additional Mitigating, Instrumentation, and Diagnostic Equipment Important to Human Response

Instrumentation required to perform human actions	Description	Potentially Affected Human Failure Event in PRA model	Comments/Disposition
LI-1	RWST level	OPER-1 Failure to align recirculation	Instrumentation required to identify need to switch over to recirculation. While lots of redundancy with other LI's, all are in close proximity on MCR board and so one fire could affect multiple instruments. Hence will model.
LI-2	RWST level	OPER-1 Failure to align recirculation	Instrumentation required to identify need to switch over to recirculation. While lots of redundancy with other LI's, all are in close proximity on MCR board and so one fire could affect multiple instruments. Hence will model.
LI-3	Cont. sump level	OPER-1 Failure to align recirculation	Instrumentation required to identify need to switch over to recirculation. While lots of redundancy with other LI's, all are in close proximity on MCR board and so one fire could affect multiple instruments. Hence will model.
LI-4	Cont. sump level	OPER-1 Failure to align recirculation	Instrumentation required to identify need to switch over to recirculation. While lots of redundancy with other LI's, all are in close proximity on MCR board and so one fire could affect multiple instruments. Hence will model.
TI-1	Letdown heat exchanger outlet temp	OPER-2 Failure to isolate letdown on high temperature due to CCW loss	Instrumentation required to identify need to isolate letdown when CCW is lost
PT-1	RCS pressure	OPER-4 Failure to align feed and bleed	Instrumentation (indicator) required to identify need for feed and bleed
A-1	AFW motor high temp	N/A	Spurious high temperature alarm causes operator to shut down AFW pump erroneously

Step 6: Include Potentially High Consequence Related Equipment

Equipment or combinations of equipment that can cause high consequence event	Description of high consequence event	Comments/Disposition
MOV-7 and MOV-8	Spurious opening of MOV-7 and MOV-8 results in interfacing system LOCA – meets high consequence event definition.	Need to model this combination failure.

Step 7: Assemble Fire PRA Equipment List

Table 1: Fire PRA Equipment List Information (For Instructors)

Equipment ID	Equipment Description	Equipment Type	Location	Power Supply	PRA Event Identifier	PRA Event Description	Normal Position/ Status	Desired Position/ Status	Failed Electrical Position	Failed Air Position
HPI-A[1]	High pressure safety injection pump A	Pump	Aux Bldg. El. 0 Ft	SWGR-A	HPIA_FTS	HPIA fails to start	Standby	On	Off	N/A
					HPIA_FTR	HPIA fails to run	On	On	Off	N/A
HPI-B	High pressure safety injection pump B	Pump	Aux Bldg. El. 0 Ft	SWGR-B	HPIB_FTS	HPIB fails to start	Standby	On	Off	N/A
					HPIB_FTR	HPIB fails to run	On	On	Off	N/A
AFW-A	Motor driven AFW pump A	Pump	Turbine Bldg. El. 0 Ft	SWGR-A	AFWA-FTS	AFWA fails to start	Standby	On	Off	N/A
AFW-A	Motor driven AFW pump A	Pump	Turbine Bldg. El. 0 Ft	Turbine Bldg. El. 0 Ft	AFWA-FTR	AFWA fails to run	On	On	Off	N/A
AFW-B	Steam driven AFW pump B	Pump	Turbine Bldg. El. 0 Ft	N/A	AFWB-FTS	AFWB fails to start	Standby	On	N/A	N/A
AFW-B	Steam driven AFW pump B	Pump	Turbine Bldg. El. 0 Ft	N/A	AFWB-FTR	AFWB fails to run	On	On	N/A	N/A
AFW-C	Motor driven AFW pump C	Pump	Turbine Bldg. El. 0 Ft	SWGR-2	AFWC-FTS	AFWC fails to start	Standby	On	Off	N/A
AFW-C	Motor driven AFW pump C	Pump	Turbine Bldg. El. 0 Ft	SWGR-2	AFWC-FTR	AFWC fails to run	Standby	On	Off	N/A
RCP	Reactor coolant pump	Pump	Containment	SWGR-1	RCP1-FTT	RCP 1 fails to trip	On	Off	Off	N/A
COMP-1	Instrument air compressor	Compressor	Turbine Bldg. El. 0 Ft	LC-1	IA-COMP1_FTS	Instrument air compressor fails to start	Cycle	Cycle	Off	N/A

Equipment ID	Equipment Description	Equipment Type	Location	Power Supply	PRA Event Identifier	PRA Event Description	Normal Position/ Status	Desired Position/ Status	Failed Electrical Position	Failed Air Position
COMP-1	Instrument air compressor	Compressor	Turbine Bldg. El. 0 Ft	LC-1	IA-COMP1_FTR	Instrument air compressor fails to run	Cycle	Cycle	Off	N/A
AOV-1[2] (SOV-1)	Power operated relief valve	AOV	Containment	VITAL-A	AOV-1_TO	PORV AOV-1 transfers open	Closed	Closed	Closed	Closed
					AOV-1_FTO	PORV AOV-1 fails to open	Closed	Open	Closed	Closed
AOV-2[3] (SOV-2)	Letdown isolation valve	AOV	Aux Bldg. El. 0 Ft	DC BUS-B	AOV-2_FTC	AOV-2 fails to close	Open	Closed	Closed	Closed
AOV-3[4] (SOV-3)	Charging pump injection valve	AOV	Aux Bldg. El. 0 Ft	DC BUS-B	AOV-3_FTC	AOV-3 FAILS TO CLOSE	Open	Closed	Closed	Closed
MOV-1	HPI discharge valve	MOV	Aux Bldg. El. 0 Ft	MCC-A1	MOV-1_FTO	MOV-1 FAILS TO OPEN	Closed	Open	As Is	N/A
MOV-2[5]	VCT isolation valve	MOV	Aux Bldg. El. 0 Ft	MCC-B1	MOV-2_FTC	MOV-2 fails to close	Open	Closed	As Is	N/A
MOV-3[6]	Cont. sump recirc valve	MOV	Aux Bldg. El. -20 Ft	MCC-A1	MOV-3_FTO	MOV-3 fails to open	Closed	Open	As Is	N/A
					MOV-3_TO	MOV-3 TRANSFERS OPEN	Closed	Closed	As Is	N/A
MOV-4	Cont. sump recirc valve	MOV	Aux Bldg. El. -20 Ft	MCC-B1	MOV-4_FTO	MOV-4 fails to open	Closed	Open	As Is	N/A
					MOV-4 _TO	MOV-4 TRANSFERS OPEN	Closed	Closed	As Is	N/A
MOV-5	RWST isolation valve	MOV	Aux Bldg. El. 0 Ft	MCC-A1	MOV-5_FTO	MOV-5 fails to open	Closed	Open/Closed	As Is	N/A
MOV-6	RWST isolation valve	MOV	Aux Bldg. El. 0 Ft	MCC-B1	MOV-6_FTO	MOV-6 fails to open	Closed	Open/Closed	As Is	N/A
MOV-7[7]	RHR inboard suction valve	MOV	Containment	MCC-A1	MOV-7_TO	MOV-7 TRANSFERS OPEN	Closed	Closed	As Is	N/A
MOV-8	RHR outboard suction valve	MOV	Aux Bldg. El. -20 Ft	MCC-B1	MOV-8_TO	MOV-8 TRANSFERS OPEN	Closed	Closed	As Is	N/A

Equipment ID	Equipment Description	Equipment Type	Location	Power Supply	PRA Event Identifier	PRA Event Description	Normal Position/ Status	Desired Position/ Status	Failed Electrical Position	Failed Air Position
MOV-9	HPI discharge valve	MOV	Aux Bldg. El. 0 Ft	MCC-B1	MOV-9_FTO	MOV-9 FAILS TO OPEN	Closed	Open	As Is	N/A
MOV-10	AFW pump A discharge valve	MOV	Turbine Bldg. El. 0 Ft	MCC-A1	MOV-10_FTO	MOV-10 fails to open	Closed	Open	As Is	N/A
MOV-11	AFW pump B discharge valve	MOV	Turbine Bldg. El. 0 F	DC BUS-B	MOV-11_FTO	MOV-11 fails to open	Closed	Open	As is	N/A
MOV-13	PORV block valve	MOV	Containment	MCC-A1	MOV-13_FTC	MOV-13 fails to close	Open	Open/ Closed	As is	N/A
MOV-14	AFW pump B turbine steam line isolation valve	MOV	Turbine Bldg. El. 0 Ft	DC BUS-B	MOV-14_FTO	MOV-14 FAILS TO OPEN	Closed	Open	As-Is	N/A
MOV-15	AFW pump B steam inlet throttle valve	MOV	Turbine Bldg. El. 0 Ft	DC BUS-B	MOV-15_FTO	MOV-15 FAILS TO OPEN	Closed	Throttled	As-Is	N/A
MOV-18	AFW pump C discharge valve	MOV	Turbine Bldg. El. 0 Ft	MCC-2	MOV-18_FTO	MOV-18 fails to open	Closed	Open	As-Is	N/A
LI-1[8]	RWST level	Instrument	Yard	VITAL-A	LI-1_FL	RWST Level indication fails low	Available	Available	Low	N/A
					LI-1_FH	RWST Level indication fails high	Available	Available	High	N/A
LI-2	RWST level	Instrument	Yard	VITAL-B	LI-2_FL	RWST Level indication fails low	Available	Available	Low	N/A
					LI-2_FH	RWST Level indication fails high	Available	Available	High	N/A
LI-3	Cont. sump level	Instrument	Containment	VITAL-A	LI-3_FH	Cont sump Level indication fails high	Available	Available	High	N/A
LI-4	Cont. sump level	Instrument	Containment	VITAL-B	LI-4_FH	Cont sump Level indication fails high	Available	Available	High	N/A
TI-1[9]	Letdown heat exchanger outlet temp	Instrument	Aux Bldg. El. 0 Ft	VITAL-A	TI-1_FL	Letdown temperature indication fails low	Available	Available	Low	N/A
PT-1[10]	RCS pressure	Instrument	Containment	VITAL-B	PI-1_FH	RCS pressure indication fails high	Available	Available	High	N/A

Equipment ID	Equipment Description	Equipment Type	Location	Power Supply	PRA Event Identifier	PRA Event Description	Normal Position/ Status	Desired Position/ Status	Failed Electrical Position	Failed Air Position
A-1	AFW motor high temperature	Annunciator	SWG Access Room	VITAL-A	ANN-1_FH	AFW motor high temperature annunciator spuriously indicates high	Available	Non spurious	Unavailable	N/A
SWGR-A[11]	Train A 4160 V switchgear	Switchgear	Switchgear Room A	SUT-1 DC BUS-A	PNL-A EPS-4VBUSAF-1	4KV BUS A FAULT	Energized from SUT-1	Energized from SUT-1	De-Energized	N/A
				EDG-A DC BUS-A	PNL-A EPS-4VBUSAF-2	4KV BUS A FAULT	Energized from SUT-1	Energized from EDG-A	De-Energized	N/A
SWGR-B	Train B 4160 V switchgear	Switchgear	Switchgear Room B	SUT-1 DC BUS-B	PNL-B EPS-4VBUSBF-1	4KV BUS A FAULT	Energized from SUT-1	Energized from SUT-1	De-Energized	N/A
				EDG-B DC BUS-B	PNL-B EPS-4VBUSBF-2	4KV BUS A FAULT	Energized from SUT-1	Energized from EDG-B	De-Energized	N/A
SWGR-1	Non-safety 4160 V switchgear	Switchgear	Turbine Bldg. El. 0ft	UAT-1 SUT-1	EPS-4VBUS1F	4KV BUS 1 FAULT	Energized	Energized	De-Energized	N/A
SWGR-2	Non-safety 4160 V switchgear	Switchgear	Turbine Bldg. El. 0ft	UAT-1 SUT-1	EPS-4VBUS2F	4KV BUS 2 FAULT	Energized	Energized	De-Energized	N/A
SUT-1	Startup transformer	Transformer	Yard	OSP	SUTF	FAILURE OF START-UP TRANSFORMER (SUT)	Energized	Energized	De-Energized	N/A
EDG-A	Train A emergency diesel generator	Diesel Generator	DG Bldg.	DC BUS-A	EPS-DGAF	FAILURE OF DIESEL GENERATOR A	Standby	On	Off	N/A
EDG-B	Train B emergency diesel generator	Diesel Generator	DG Bldg.	DC BUS-B	EPS-DGBF	FAILURE OF DIESEL GENERATOR B	Standby	On	Off	N/A
LC-1	Non-safety 480 V load center	Load Center	Turbine Bldg. El. 0 ft	SST-1	EPS-480VLC1F	480V LOAD CENTER 1 FAULT	Energized	Energized	De-Energized	N/A

Equipment ID	Equipment Description	Equipment Type	Location	Power Supply	PRA Event Identifier	PRA Event Description	Normal Position/ Status	Desired Position/ Status	Failed Electrical Position	Failed Air Position
LC-2	Non-safety 480 V load center	Load Center	Turbine Bldg. El. 0 ft	SST-2	EPS-480VLC2F	480V LOAD CENTER 2 FAULT	Energized	Energized	De-Energized	N/A
LC-A	Train A 480 V load center	Load Center	Switchgear Room A	SST-A PNL-A	EPS-480VLCAF	480V LOAD CENTER A FAULT	Energized	Energized	De-Energized	N/A
LC-B	Train B 480 V load center	Load Center	Switchgear Room B	SST-B PNL-B	EPS-480VLCBF	480V LOAD CENTER B FAULT	Energized	Energized	De-Energized	N/A
SST-1	Non-safety station service transformer	Transformer	Turbine Bldg. El. 0 F	SWGR-1	EPS-480VLC1XTF	480V LOAD CENTER 1 TRANSFORMER FAILS	Energized	Energized	De-Energized	N/A
SST-2	Non-safety station service transformer	Transformer	Turbine Bldg. El. 0 F	SWGR-2	EPS-480VLC2XTF	480V LOAD CENTER 2 TRANSFORMER FAILS	Energized	Energized	De-Energized	N/A
SST-A	Train A station service transformer	Transformer	Switchgear Room A	SWGR-A	EPS-480VLCAXTF	480V LOAD CENTER A TRANSFORMER FAILS	Energized	Energized	De-Energized	N/A
SST-B	Train B station service transformer	Transformer	Switchgear Room B	SWGR-B	EPS-480VLCBXTF	480V LOAD CENTER B TRANSFORMER FAILS	Energized	Energized	De-Energized	N/A
MCC-1	Non-safety 480 V motor control center	Motor Control Center	Turbine Bldg. El. 0 Ft	LC-1	EPS-480VMCC1F	480V MCC 1 FAULT	Energized	Energized	De-Energized	N/A
MCC-2	Non-safety 480 V motor control center	Motor Control Center	Turbine Bldg. El. 0 Ft	LC-2	EPS-480VMCC2F	480V MCC 2 FAULT	Energized	Energized	De-Energized	N/A
MCC-A1	Train A 480 V motor control center	Motor Control Center	SWG Access Room	LC-A	EPS-480VMCCA1F	480V MCC A1 FAULT	Energized	Energized	De-Energized	N/A
MCC-B1	Train B 480 V motor control center	Motor Control Center	SWG Access Room	LC-B	EPS-480VMCCB1F	480V MCC B1 FAULT	Energized	Energized	De-Energized	N/A
ATS-1	Automatic transfer switch	ATS	SWG Access Room	MCC-1 MCC-2	EPS-ATS1F	AUTOMATIC TRANSFER SWITCH ATS-1 FAILS	Energized from MCC-1	Energized from MCC-1	De-Energized	N/A
BC-1	Non-safety swing battery charger	Battery Charger	Turbine Bldg. El. 0 Ft	ATS-1	EPS-BC1F	FAILURE OF BATTERY CHARGER 1	Energized	Energized	De-Energized	N/A

Equipment ID	Equipment Description	Equipment Type	Location	Power Supply	PRA Event Identifier	PRA Event Description	Normal Position/ Status	Desired Position/ Status	Failed Electrical Position	Failed Air Position
BC-A	Train A battery charger	Battery Charger	Switchgear Room A	MCC-A1	EPS-BCAF	FAILURE OF BATTERY CHARGER A	Energized	Energized	De-Energized	N/A
BC-B	Train B battery charger	Battery Charger	Switchgear Room B	MCC-B1	EPS-BCBF	FAILURE OF BATTERY CHARGER B	Energized	Energized	De-Energized	N/A
BAT-1	Non-safety battery	Battery	Turbine Bldg. El. 0 Ft	N/A	EPS-SB	FAILURE OF STATION BATTERY	Available	Available	Unavailable	N/A
BAT-A	Train A battery	Battery	Battery Room A	N/A	EPS-BATA	FAILURE OF BATTERY A	Available	Available	Unavailable	N/A
BAT-B	Train B battery	Battery	Battery Room B	N/A	EPS-BATB	FAILURE OF BATTERY B	Available	Available	Unavailable	N/A
DC BUS-1	Non-safety 125 VDC bus	DC Bus	Turbine Bldg. El. 0 Ft	BC-1 BAT-1	EPS-125VNSDCBUSF	FAULT ON 125V NON-SAFETY DC BUS	Energized	Energized	De-Energized	N/A
DC BUS-A	Train A 125 VDC bus	DC Bus	Switchgear Room A	BC-A BAT-A	EPS-125VDCBUSAF	FAULT ON 125V DC BUS A	Energized	Energized	De-Energized	N/A
DC BUS-B	Train B 125 VDC bus	DC Bus	Switchgear Room B	BC-B BAT-B	EPS-125VDCBUSBF	FAULT ON 125V DC BUS B	Energized	Energized	De-Energized	N/A
PNL-A	Train A 125 VDC panel	Panel board	Switchgear Room A	DC BUS-A	EPS-125VDCPNLAF	FAULT ON 125V DC PANEL A	Energized	Energized	De-Energized	N/A
PNL-B	Train B 125 VDC panel	Panel board	Switchgear Room B	DC BUS-B	EPS-125VDCPNLBF	FAULT ON 125V DC PANEL A	Energized	Energized	De-Energized	N/A
INV-A	Train A inverter	Inverter	Switchgear Room A	DC BUS-A	EPS-120VBUSAINVF	FAILURE OF 120V BUS A INVERTER	Energized	Energized	De-Energized	N/A
INV-B	Train B inverter	Inverter	Switchgear Room B	DC BUS-B	EPS-120VBUSAINVF	FAILURE OF 120V BUS B INVERTER	Energized	Energized	De-Energized	N/A
VITAL-A	Train A 120 VAC vital bus	120VAC Bus	SWG Access Room	INV-A	EPS-120VBUSAF	120V BUS A FAULT	Energized	Energized	De-Energized	N/A
VITAL-B	Train B 120 VAC vital bus	120VAC Bus	SWG Access Room	INV-B	EPS-120VBUSBF	120V BUS A FAULT	Energized	Energized	De-Energized	N/A

Notes:

Legend

Appendix R	
Components/failures added to PRA for Fire PRA Model	

[1] HPI pumps A & B are in Appendix R for normal charging function; not for HPI.

[2] Closed to prevent LOCA /Open for feed and bleed. Appendix R has valve only to ensure remains closed.

[3] AOV-2 in Appendix R only for normal letdown function.

[4] AOV-3 in Appendix R only for normal charging function.

[5] MOV-2 in Appendix R only for normal suction to charging.

[6] MOV-3 and MOV-4 need to be closed for when using RWST water supply for HPI / Open for recirculation mode of injection. MOVs 5 & 6 are correspondingly open for RWST use and closed for recirc.

[7] Valve electrically blocked closed. Control power fuses are supposed to be removed. MOV-7 & 8 in Appendix R for both normal isolation and shutdown cooling functions.

[8] If RWST level indication fails high the operator will fail to establish recirculation. If the RWST level fails low and containment sump level fails high, the operator will establish suction to dry sump and fail the HPI the pumps due to insufficient suction. Need to resolve failure mode.

[9] If letdown temperature indication fails low, the operator will fail to isolate the letdown line on loss of CCW. This will cause HPI pumps to cavitate due to high temperature in the suction line.

[10] If RCS pressure instrument fails high, the low pressure signal to initiate emergency safeguards actuation during a lire-induced LOCA will not be initiated

[11] For SWGR-A or SWGR-B, only one basic event is used in the model. However, the circuit analysis impact to the switchgear is a function of the power supply

Basic Event	Description	Time (min)	Location	Base Value	CR-1 No Abandonment		
					Set	Reason for set selection	Screening Value
OPER-1	Operator fails to switch over to re-circulation	>120	CR	0.001	3	**Potential damage to multiple trains of both safety and non-safety equipment as well as affect operators.** Set 1: Does not meet environmental impact condition. Depending on fire location/size, may not meet spurious behavior conditions. Set 2: Same concerns as for Set 1. Set 4: Applies only for CR abandonment. Hence should use Set 3 criteria for both existing and new HFEs.	0.100
OPER-2	Operator fails to isolate letdown and establish RWST flow	15	CR	new	3		1.000
OPER-4	Operator fails to establish feed and bleed	30	CR	0.008	3		1.000
OPER-5	Operator fails to close PORV block valve	10	CR	new	3		1.000
OPER-6	Operator fails to depower stuck open PORV	<10	Local	new	3		1.000
OPER-7	Operator fails to trip reactor coolant pumps (loss of CCW)	<10	CR	0.010	3		1.000

Basic Event	Description	Time (min)	Location	Base Value	CR-2 Abandonment		
					Set	Reason for set selection	Screening Value
OPER-1	Operator fails to switch over to re-circulation	>120	CR	0.001	4	**Fire requires CR abandonment.** Set 4 criteria is directly applicable. Requires more detailed analysis and modeling.	1.000
OPER-2	Operator fails to isolate letdown and establish RWST flow	15	CR	new	4		
OPER-4	Operator fails to establish feed and bleed	30	CR	0.008	4		
OPER-5	Operator fails to close PORV block valve	10	CR	new	4		
OPER-6	Operator fails to depower stuck open PORV	<10	Local	new	4		
OPER-7	Operator fails to trip reactor coolant pumps (loss of CCW)	<10	CR	0.010	4		

Basic Event	Description	Time (min)	Location	Base Value	Area 4B (AFW)		
					Set	Reason for set selection	Screening Value
OPER-1	Operator fails to switch over to re-circulation	>120	CR	0.001	3	**Potentially damages both trains of safety-related AFW.** Therefore does not meet Set 1 or Set 2 criteria. Set 4 criteria is for CR abandonment. Need to use Set 3 criteria for both existing and new HFEs.	0.100
OPER-2	Operator fails to isolate letdown and establish RWST flow	15	CR	new	3		1.000
OPER-4	Operator fails to establish feed and bleed	30	CR	0.008	3		1.000
OPER-5	Operator fails to close PORV block valve	10	CR	new	3		1.000
OPER-6	Operator fails to depower stuck open PORV	<10	Local	new	3		1.000
OPER-7	Operator fails to trip reactor coolant pumps (loss of CCW)	<10	CR	0.010	3		1.000

Basic Event	Description	Time (min)	Location	Base Value	Area 5 (Battery Room A)		
					Set	Reason for set selection	Screening Value
OPER-1	Operator fails to switch over to re-circulation	>120	CR	0.001	1	**Potentially damages A train only equipment (Battery -A)**. Would not expect safety-related spurious actuations. Meets Set 1 criteria for existing HFEs. For new HFEs, use Set 3 critieria.	0.010
OPER-2	Operator fails to isolate letdown and establish RWST flow	15	CR	new	3		1.000
OPER-4	Operator fails to establish feed and bleed	30	CR	0.008	1		0.080
OPER-5	Operator fails to close PORV block valve	10	CR	new	3		1.000
OPER-6	Operator fails to depower stuck open PORV	<10	Local	new	3		1.000
OPER-7	Operator fails to trip reactor coolant pumps (loss of CCW)	<10	CR	0.010	1		0.100

Basic Event	Description	Time (min)	Location	Base Value	Area 10 (Switchgear A)		
					Set	Reason for set selection	Screening Value
OPER-1	Operator fails to switch over to re-circulation	>120	CR	0.001	3	**Potentially damages A train equipment as well as B train diesel generator.** A fire in this area could affect multiple safety-related trains particularly if we can lose offsite power and need EDG-B. It is therefore most conservative to conclude that this does not meet Set 1 or Set 2 criteria. Set 4 applies only to CR abandonment. Best to use Set 3 criteria for both existing and new HFEs.	0.100
OPER-2	Operator fails to isolate letdown and establish RWST flow	15	CR	new	3		1.000
OPER-4	Operator fails to establish feed and bleed	30	CR	0.008	3		1.000
OPER-5	Operator fails to close PORV block valve	10	CR	new	3		1.000
OPER-6	Operator fails to depower stuck open PORV	<10	Local	new	3		1.000
OPER-7	Operator fails to trip reactor coolant pumps (loss of CCW)	<10	CR	0.010	3		1.000

Basic Event	Description	Time (min)	Location	Base Value	Area 11 (Switchgear B)		
					Set	Reason for set selection	Screening Value
OPER-1	Operator fails to switch over to re-circulation	>120	CR	0.001	2	**Potentially damages B train only equipment.** Could expect mutliple safety-related spurious actuations but only for B train equipment. Hence does not meet Set 1 but does meet Set 2 criteria for existing HFEs. For new HFEs, need to use Set 3 criteria.	0.100
OPER-2	Operator fails to isolate letdown and establish RWST flow	15	CR	new	3		1.000
OPER-4	Operator fails to establish feed and bleed	30	CR	0.008	2		0.100
OPER-5	Operator fails to close PORV block valve	10	CR	new	3		1.000
OPER-6	Operator fails to depower stuck open PORV	<10	Local	new	3		1.000
OPER-7	Operator fails to trip reactor coolant pumps (loss of CCW)	<10	CR	0.010	2		0.100

Step 1: Develop CDF or CCDP Model

CDF FIRE PRA MODEL MAPPING TABLE (USE THE EVENT TREES AND FAULT TREES BELOW)					
Fire Initiating Event	**Equipment ID**	**PRA Event Identifier**	**PRA Initiating Event**	**Additional model changes are required to facilitate mapping? (Y or N)**	**Describe modeling strategy to facilitate mapping.**
%FA-1	HPI-A	HPIA_FTS	%T1	N	
%FA-1	HPI-A	HPIA_FTR	%T1	N	
%FA-1	HPI-B	HPIB_FTS	%T1	N	
%FA-1	HPI-B	HPIB_FTR	%T1	N	
%FA-1	AFW-A	AFWA-FTS	%T1	N	
%FA-1	AFW-B	AFWB-FTS	%T1	N	
%FA-1	AFW-C	AFWC-FTS	%T1	Y	Insufficient flow from AFW pump C
%FA-1	AFW-C	AFWC-FTR	%T1	Y	Insufficient flow from AFW pump C
%FA-1	RCP	RCP1-FTT	%T15	Y	RCP fails to trip given loss of CCW

CDF FIRE PRA MODEL MAPPING TABLE (USE THE EVENT TREES AND FAULT TREES BELOW)					
Fire Initiating Event	**Equipment ID**	**PRA Event Identifier**	**PRA Initiating Event**	**Additional model changes are required to facilitate mapping? (Y or N)**	**Describe modeling strategy to facilitate mapping.**
%FA-1	AOV-1 (SOV-1)	AOV-1_TO	%T1	Y	Spurious opening of PORV and failure to open PORV path
%FA-1	AOV-1 (SOV-1)	AOV-1_FTO	%T1	N	
%FA-1	AOV-2 (SOV-2)	AOV-2_FTC	%T1	Y	Failure to isolate letdown and establish flow from injection tank
%FA-1	AOV-3 (SOV-3)	AOV-3_FTC	%T1	N	
%FA-1	MOV-1	MOV-1_FTO	%T1	N	
%FA-1	MOV-2	MOV-2_FTC	%T1	N	
%FA-1	MOV-3	MOV-3_TO	%T1	Y	Containment sump flow path open
%FA-1	MOV-4	MOV-4_TO	%T1	Y	Containment sump flow path open

CDF FIRE PRA MODEL MAPPING TABLE (USE THE EVENT TREES AND FAULT TREES BELOW)					
Fire Initiating Event	**Equipment ID**	**PRA Event Identifier**	**PRA Initiating Event**	**Additional model changes are required to facilitate mapping? (Y or N)**	**Describe modeling strategy to facilitate mapping.**
%FA-1	MOV-5	MOV-5_FTO	%T1	N	
%FA-1	MOV-6	MOV-6_FTO	%T1	N	
%FA-1	MOV-9	MOV-9_FTO	%T1	N	
%FA-1	MOV-10	MOV-10_FTO	%T1	N	
%FA-1	MOV-11	MOV-11_FTO	%T1	N	
%FA-1	MOV-13	MOV-13_FTC	%T1	Y	Spurious opening of PORV and failure to close PORV path
%FA-1	MOV-14	MOV-14_FTO	%T1	N	
%FA-1	MOV-15	MOV-15_FTO	%T1	N	
%FA-1	MOV-18	MOV-18_FTO	%T1	Y	Insufficient flow from AFW pump C
%FA-1	LI-1	LI-1_FL	%T1	Y	Spurious instrumentation failure causes operator to prematurely switchover to recirculation

CDF FIRE PRA MODEL MAPPING TABLE (USE THE EVENT TREES AND FAULT TREES BELOW)					
Fire Initiating Event	**Equipment ID**	**PRA Event Identifier**	**PRA Initiating Event**	**Additional model changes are required to facilitate mapping? (Y or N)**	**Describe modeling strategy to facilitate mapping.**
%FA-1	LI-1	LI-1_FH	%T1	Y	Operator fails to switchover to recirculation due to instrumentation failure
%FA-1	LI-2	LI-2_FL	%T1	Y	Spurious instrumentation failure causes operator to prematurely switchover to recirculation
%FA-1	LI-2	LI-2_FH	%T1	Y	Operator fails to switchover to recirculation due to instrumentation failure
%FA-1	LI-3	LI-3_FH	%T1	Y	Spurious instrumentation failure causes operator to prematurely switchover to recirculation
%FA-1	LI-4	LI-4_FH	%T1	Y	Spurious instrumentation failure causes operator to prematurely switchover to recirculation
%FA-1	TI-1	TI-1_FL	%T1	Y	Failure to isolate letdown and establish flow from injection tank due to instrumentation failure
%FA-1	PT-1	PI-1_FH	%T1	N	

CDF FIRE PRA MODEL MAPPING TABLE (USE THE EVENT TREES AND FAULT TREES BELOW)					
Fire Initiating Event	**Equipment ID**	**PRA Event Identifier**	**PRA Initiating Event**	**Additional model changes are required to facilitate mapping? (Y or N)**	**Describe modeling strategy to facilitate mapping.**
%FA-1	PT-1	PI-1_FL	%T1	Y	Operator fails to establish feed and bleed cooling due instrumentation failure.
%FA-1	A-1	ANN-1_FH	%T1	Y	Operator shuts down AFW pump A due to high motor temperature alarm.
%FA-1	SWGR-A	PNL-A / EPS-4VBUSAF-1st	%T1	N	
%FA-1	SWGR-A	PNL-A / EPS-4VBUSAF-2nd	%T1	N	
%FA-1	SWGR-B	PNL-A / EPS-4VBUSBF-1st	%T1	N	
%FA-1	SWGR-B	PNL-A / EPS-4VBUSBF-2nd	%T1	N	
%FA-1	SWGR-1	EPS-4VBUS1F	%T1	N	

CDF FIRE PRA MODEL MAPPING TABLE (USE THE EVENT TREES AND FAULT TREES BELOW)					
Fire Initiating Event	**Equipment ID**	**PRA Event Identifier**	**PRA Initiating Event**	**Additional model changes are required to facilitate mapping? (Y or N)**	**Describe modeling strategy to facilitate mapping.**
%FA-1	SWGR-2	EPS-4VBUS2F	%T1	N	
%FA-1	SUT-1	SUTF	%T1	N	
%FA-1	EDG-A	EPS-DGAF	%T1	N	
%FA-1	EDG-B	EPS-DGBF	%T1	N	
%FA-1	LC-1	EPS-480VLC1F	%T1	N	
%FA-1	LC-2	EPS-480VLC2F	%T1	N	
%FA-1	LC-A	EPS-480VLCAF	%T1	N	
%FA-1	LC-B	EPS-480VLCBF	%T1	N	
%FA-2	HPI-A	HPIA_FTS	%T1	N	
%FA-2	HPI-A	HPIA_FTR	%T1	N	
%FA-2	HPI-B	HPIB_FTS	%T1	N	

CDF FIRE PRA MODEL MAPPING TABLE (USE THE EVENT TREES AND FAULT TREES BELOW)					
Fire Initiating Event	**Equipment ID**	**PRA Event Identifier**	**PRA Initiating Event**	**Additional model changes are required to facilitate mapping? (Y or N)**	**Describe modeling strategy to facilitate mapping.**
%FA-2	HPI-B	HPIB_FTR	%T1	N	
%FA-2	RCP-1	RCP1-FTT	%T15	Y	RCP fails to trip given loss of CCW
%FA-2	RCP-2	RCP2-FTT	%T15	Y	RCP fails to trip given loss of CCW
%FA-2	AOV-2 (SOV-2)	AOV-2_FTC	%T1	Y	Failure to isolate letdown and establish flow from injection tank
%FA-2	AOV-3 (SOV-3)	AOV-3_FTC	%T1	N	
%FA-2	MOV-1	MOV-1_FTO	%T1	N	
%FA-2	MOV-2	MOV-2_FTC	%T1	N	
%FA-2	MOV-3	MOV-3_TO	%T1	Y	Containment sump flow path open
%FA-2	MOV-4	MOV-4_TO	%T1	Y	Containment sump flow path open
%FA-2	MOV-5	MOV-5_FTO	%T1	N	

CDF FIRE PRA MODEL MAPPING TABLE (USE THE EVENT TREES AND FAULT TREES BELOW)					
Fire Initiating Event	**Equipment ID**	**PRA Event Identifier**	**PRA Initiating Event**	**Additional model changes are required to facilitate mapping? (Y or N)**	**Describe modeling strategy to facilitate mapping.**
%FA-2	MOV-6	MOV-6_FTO	%T1	N	
%FA-2	MOV-9	MOV-9_FTO	%T1	N	
%FA-2	TI-1	TI-1_FL	%T1	Y	Failure to isolate letdown and establish flow from injection tank due to instrumentation failure
%FA-2	A-1	ANN-1_FH	%T1	Y	Operator shuts down AFW pump A due to high motor temperature alarm.
%FA-3	AFW-A	AFWA-FTS	%T1	N	
%FA-3	AFW-B	AFWB-FTS	%T1	N	
%FA-3	AFW-C	AFWC-FTS	%T1	Y	Insufficient flow from AFW pump C
%FA-3	AFW-C	AFWC-FTR	%T1	Y	Insufficient flow from AFW pump C
%FA-3	AOV-1 (SOV-1)	AOV-1_TO	%T1	Y	Spurious opening of PORV and failure to open PORV path

CDF FIRE PRA MODEL MAPPING TABLE (USE THE EVENT TREES AND FAULT TREES BELOW)					
Fire Initiating Event	**Equipment ID**	**PRA Event Identifier**	**PRA Initiating Event**	**Additional model changes are required to facilitate mapping? (Y or N)**	**Describe modeling strategy to facilitate mapping.**
%FA-3	AOV-1 (SOV-1)	AOV-1_FTO	%T1	N	
%FA-3	MOV-10	MOV-10_FTO	%T1	N	
%FA-3	MOV-11	MOV-11_FTO	%T1	N	
%FA-3	MOV-13	MOV-13_FTC	%T1	Y	Spurious opening of PORV and failure to open PORV path
%FA-3	MOV-14	MOV-14_FTO	%T1	N	
%FA-3	MOV-15	MOV-15_FTO	%T1	N	
%FA-3	MOV-18	MOV-18_FTO	%T1	Y	Insufficient flow from AFW pump C
%FA-3	LI-1	LI-1_FL	%T1	Y	Spurious instrumentation failure causes operator to prematurely switchover to recirculation
%FA-3	LI-1	LI-1_FH	%T1	Y	Operator fails to switchover to recirculation due

CDF FIRE PRA MODEL MAPPING TABLE (USE THE EVENT TREES AND FAULT TREES BELOW)					
Fire Initiating Event	**Equipment ID**	**PRA Event Identifier**	**PRA Initiating Event**	**Additional model changes are required to facilitate mapping? (Y or N)**	**Describe modeling strategy to facilitate mapping.**
					to instrumentation failure
%FA-3	LI-2	LI-2_FL	%T1	Y	Spurious instrumentation failure causes operator to prematurely switchover to recirculation
%FA-3	LI-2	LI-2_FH	%T1	Y	Operator fails to switchover to recirculation due to instrumentation failure
%FA-3	LI-3	LI-3_FH	%T1	Y	Spurious instrumentation failure causes operator to prematurely switchover to recirculation
%FA-3	LI-4	LI-4_FH	%T1	Y	Spurious instrumentation failure causes operator to prematurely switchover to recirculation
%FA-3	PT-1	PI-1_FH	%T1	N	
%FA-3	PT-1	PI-1_FL	%T1	Y	Operator fails to establish feed and bleed cooling
%FA-3	SWGR-A	PNL-A	%T1	N	

CDF FIRE PRA MODEL MAPPING TABLE (USE THE EVENT TREES AND FAULT TREES BELOW)					
Fire Initiating Event	**Equipment ID**	**PRA Event Identifier**	**PRA Initiating Event**	**Additional model changes are required to facilitate mapping? (Y or N)**	**Describe modeling strategy to facilitate mapping.**
%FA-3	SWGR-A	PNL-A	%T1	N	
%FA-3	SWGR-B	PNL-B	%T1	N	
%FA-3	SWGR-B	PNL-B	%T1	N	
%FA-3	SWGR-1	EPS-4VBUS1F	%T1	N	
%FA-3	SWGR-2	EPS-4VBUS2F	%T1	N	
%FA-4B	AFW-A	AFWA-FTS	%T1	N	
%FA-4B	AFW-B	AFWB-FTS	%T1	N	
%FA-4B	MOV-10	MOV-10_FTO	%T1	N	
%FA-4B	MOV-11	MOV-11_FTO	%T1	N	
%FA-4B	MOV-14	MOV-14_FTO	%T1	N	
%FA-4B	MOV-15	MOV-15_FTO	%T1	N	

CDF FIRE PRA MODEL MAPPING TABLE (USE THE EVENT TREES AND FAULT TREES BELOW)					
Fire Initiating Event	**Equipment ID**	**PRA Event Identifier**	**PRA Initiating Event**	**Additional model changes are required to facilitate mapping? (Y or N)**	**Describe modeling strategy to facilitate mapping.**
%FA-4B	A-1	ANN-1_FH	%T1	Y	Operator shuts down AFW pump A due to high motor temperature alarm.
%FA-4A	MOV-7	MOV-7_TO	%T1	Y	Interfacing Systems LOCA at RCS/RHR Interface (2 MOVs in series)
%FA-4A	MOV-8	MOV-8_TO	%T1	Y	Interfacing Systems LOCA at RCS/RHR Interface (2 MOVs in series)
%FA-4A	MOV-3	MOV-3_TO	%T1	Y	Containment sump flow path open
%FA-4A	MOV-4	MOV-4_TO	%T1	Y	Containment sump flow path open
%FA-5	BAT-A	EPS-BATA	%T1	N	
%FA-6	BAT-B	EPS-BATB	%T1	N	
%FA-7	MOV-7	MOV-7_TO	%T1	Y	Interfacing Systems LOCA at RCS/RHR Interface (2 MOVs in series)

CDF FIRE PRA MODEL MAPPING TABLE (USE THE EVENT TREES AND FAULT TREES BELOW)					
Fire Initiating Event	**Equipment ID**	**PRA Event Identifier**	**PRA Initiating Event**	**Additional model changes are required to facilitate mapping? (Y or N)**	**Describe modeling strategy to facilitate mapping.**
%FA-7	AOV-1 (SOV-1)	AOV-1_TO	%T1	Y	Spurious opening of PORV and failure to open PORV path
%FA-7	AOV-1 (SOV-1)	AOV-1_FTO	%T1	N	
%FA-7	RCP-1	RCP1-FTT	%T15	Y	RCP fails to trip given loss of CCW
%FA-7	RCP-2	RCP2-FTT	%T15	Y	RCP fails to trip given loss of CCW
%FA-7	MOV-13	MOV-13_FTC	%T1	Y	Spurious opening of PORV and failure to open PORV path
%FA-7	LI-3	LI-3_FH	%T1	N	
%FA-7	LI-4	LI-4_FH	%T1	N	
%FA-7	PT-1	PI-1_FH	%T1	N	
%FA-7	PT-1	PI-1_FL	%T1	Y	Operator fails to establish feed and bleed cooling

CDF FIRE PRA MODEL MAPPING TABLE (USE THE EVENT TREES AND FAULT TREES BELOW)					
Fire Initiating Event	**Equipment ID**	**PRA Event Identifier**	**PRA Initiating Event**	**Additional model changes are required to facilitate mapping? (Y or N)**	**Describe modeling strategy to facilitate mapping.**
%FA-8A	SWGR-A	PNL-A / EPS-4VBUSAF-1st	%T1	N	
%FA-8A	SWGR-A	PNL-A / EPS-4VBUSAF-2nd	%T1	N	
%FA-8A	EDG-A	EPS-DGAF	%T1	N	
%FA-8B	SWGR-B	PNL-A / EPS-4VBUSBF-1st	%T1	N	
%FA-8B	SWGR-B	PNL-A / EPS-4VBUSBF-2nd	%T1	N	
%FA-8B	EDG-B	EPS-DGBF	%T1	N	
%FA-9	AFW-A	AFWA-FTS	%T1	N	
%FA-9	AFW-B	AFWB-FTS	%T1	N	

CDF FIRE PRA MODEL MAPPING TABLE (USE THE EVENT TREES AND FAULT TREES BELOW)					
Fire Initiating Event	**Equipment ID**	**PRA Event Identifier**	**PRA Initiating Event**	**Additional model changes are required to facilitate mapping? (Y or N)**	**Describe modeling strategy to facilitate mapping.**
%FA-9	AOV-1 (SOV-1)	AOV-1_TO	%T1	Y	Spurious opening of PORV and failure to open PORV path
%FA-9	AOV-1 (SOV-1)	AOV-1_FTO	%T1	N	
%FA-9	AOV-2 (SOV-2)	AOV-2_FTC	%T1	Y	Failure to isolate letdown and establish flow from injection tank
%FA-9	AOV-3 (SOV-3)	AOV-3-FTC	%T1	N	
%FA-9	MOV-1	MOV-1_FTO	%T1	N	
%FA-9	MOV-2	MOV-2_FTC	%T1	N	
%FA-9	MOV-3	MOV-3_TO	%T1	Y	Containment sump flow path open
%FA-9	MOV-4	MOV-4_TO	%T1	Y	Containment sump flow path open

CDF FIRE PRA MODEL MAPPING TABLE (USE THE EVENT TREES AND FAULT TREES BELOW)					
Fire Initiating Event	**Equipment ID**	**PRA Event Identifier**	**PRA Initiating Event**	**Additional model changes are required to facilitate mapping? (Y or N)**	**Describe modeling strategy to facilitate mapping.**
%FA-9	MOV-7	MOV-7_TO	%T1	Y	Interfacing Systems LOCA at RCS/RHR Interface (2 MOVs in series)
%FA-9	MOV-8	MOV-8_TO	%T1	Y	Interfacing Systems LOCA at RCS/RHR Interface (2 MOVs in series)
%FA-9	MOV-9	MOV-9_FTO	%T1	N	
%FA-9	MOV-10	MOV-10_FTO	%T1	N	
%FA-9	MOV-11	MOV-11_FTO	%T1	N	
%FA-9	MOV-13	MOV-13_FTC	%T1	Y	Spurious opening of PORV and failure to open PORV path
%FA-9	TI-1	TI-1_FL	%T1	Y	Failure to isolate letdown and establish flow from injection tank due to instrumentation failure
%FA-9	A-1	ANN-1_FH	%T1	Y	Operator shuts down AFW pump A due to high

CDF FIRE PRA MODEL MAPPING TABLE (USE THE EVENT TREES AND FAULT TREES BELOW)					
Fire Initiating Event	**Equipment ID**	**PRA Event Identifier**	**PRA Initiating Event**	**Additional model changes are required to facilitate mapping? (Y or N)**	**Describe modeling strategy to facilitate mapping.**
					motor temperature alarm.
%FA-9	MCC-A1	EPS-480VMCCA1F	%T1	N	
%FA-9	MCC-B1	EPS-480VMCCB1F	%T1	N	
%FA-9	BC-A	EPS-BCAF	%T1	N	
%FA-9	BC-B	EPS-BCBF	%T1	N	
%FA-9	INV-A	EPS-120VBUSAINVF	%T1	N	
%FA-9	INV-B	EPS-120VBUSBINVF	%T1	N	
%FA-9	VITAL-A	EPS-120VBUSAF	%T1	N	

CDF FIRE PRA MODEL MAPPING TABLE (USE THE EVENT TREES AND FAULT TREES BELOW)					
Fire Initiating Event	**Equipment ID**	**PRA Event Identifier**	**PRA Initiating Event**	**Additional model changes are required to facilitate mapping? (Y or N)**	**Describe modeling strategy to facilitate mapping.**
%FA-9	VITAL-B	EPS-120VBUSBF	%T1	N	
%FA-9	SWGR-B	PNL-A / EPS-4VBUSBF-1st	%T1	N	
%FA-9	SWGR-B	PNL-A / EPS-4VBUSBF-2nd	%T1	N	
%FA-12	AFW-C	AFWC-FTS	%T1	Y	Insufficient flow from AFW pump C
%FA-12	AFW-C	AFWC-FTR	%T1	Y	Insufficient flow from AFW pump C
%FA-12	RCP	RCP1-FTT	%T15	Y	RCP fails to trip given loss of CCW
%FA-12	COMP-1	IA-COMP1_FTS	%T1	Y	Failure of instrument air
%FA-12	COMP-1	IA-COMP1_FTR	%T1	Y	Failure of instrument air
%FA-12	MOV-5	MOV-5_FTO	%T1	N	

CDF FIRE PRA MODEL MAPPING TABLE (USE THE EVENT TREES AND FAULT TREES BELOW)					
Fire Initiating Event	**Equipment ID**	**PRA Event Identifier**	**PRA Initiating Event**	**Additional model changes are required to facilitate mapping? (Y or N)**	**Describe modeling strategy to facilitate mapping.**
%FA-12	MOV-6	MOV-6_FTO	%T1	N	
%FA-12	MOV-7	MOV-7_TO	%T1	Y	Interfacing Systems LOCA at RCS/RHR Interface (2 MOVs in series)
%FA-12	MOV-8	MOV-8_TO	%T1	Y	Interfacing Systems LOCA at RCS/RHR Interface (2 MOVs in series)
%FA-12	MOV-10	MOV-10_FTO	%T1	N	
%FA-12	MOV-11	MOV-11_FTO	%T1	N	
%FA-12	MOV-14	MOV-14_FTO	%T1	N	
%FA-12	MOV-15	MOV-15_FTO	%T1	N	
%FA-12	MOV-18	MOV-18_FTO	%T1	Y	Insufficient flow from AFW pump C
%FA-12	LI-1	LI-1_FL	%T1	Y	Spurious instrumentation failure causes operator to prematurely switchover to recirculation

CDF FIRE PRA MODEL MAPPING TABLE (USE THE EVENT TREES AND FAULT TREES BELOW)					
Fire Initiating Event	**Equipment ID**	**PRA Event Identifier**	**PRA Initiating Event**	**Additional model changes are required to facilitate mapping? (Y or N)**	**Describe modeling strategy to facilitate mapping.**
%FA-12	LI-2	LI-1_FH	%T1	Y	Operator fails to switchover to recirculation due to instrumentation failure
%FA-12	LI-2	LI-2_FL	%T1	Y	Spurious instrumentation failure causes operator to prematurely switchover to recirculation
%FA-12	LI-2	LI-2_FH	%T1	Y	Operator fails to switchover to recirculation due to instrumentation failure
%FA-12	LI-3	LI-3_FH	%T1	Y	Spurious instrumentation failure causes operator to prematurely switchover to recirculation
%FA-12	LI-4	LI-4_FH	%T1	Y	Spurious instrumentation failure causes operator to prematurely switchover to recirculation
%FA-12	SWGR-A	PNL-A / EPS-4VBUSAF-1st	%T1	N	
%FA-12	SWGR-A	PNL-A / EPS-	%T1	N	

CDF FIRE PRA MODEL MAPPING TABLE (USE THE EVENT TREES AND FAULT TREES BELOW)					
Fire Initiating Event	**Equipment ID**	**PRA Event Identifier**	**PRA Initiating Event**	**Additional model changes are required to facilitate mapping? (Y or N)**	**Describe modeling strategy to facilitate mapping.**
		4VBUSAF-2nd			
%FA-12	SWGR-B	PNL-A / EPS-4VBUSBF-1st	%T1	N	
%FA-12	SWGR-B	PNL-A / EPS-4VBUSBF-2nd	%T1	N	
%FA-12	SWGR-1	EPS-4VBUS1F	%T1	N	
%FA-12	SWGR-2	EPS-4VBUS2F	%T1	N	
%FA-12	SUT-1	SUTF	%T1	N	
%FA-12	EDG-A	EPS-DGAF	%T1	N	
%FA-12	EDG-B	EPS-DGBF	%T1	N	
%FA-12	LC-1	EPS-480VLC1F	%T1	N	
%FA-12	LC-2	EPS-480VLC2F	%T1	N	

CDF FIRE PRA MODEL MAPPING TABLE (USE THE EVENT TREES AND FAULT TREES BELOW)					
Fire Initiating Event	**Equipment ID**	**PRA Event Identifier**	**PRA Initiating Event**	**Additional model changes are required to facilitate mapping? (Y or N)**	**Describe modeling strategy to facilitate mapping.**
%FA-12	SST-1	EPS-480VLC1XTF	%T1	N	
%FA-12	SST-2	EPS-480VLC2XTF	%T1	N	
%FA-12	MCC-1	EPS-480VMCC1F	%T1	N	
%FA-12	MCC-2	EPS-480VMCC2F	%T1	N	
%FA-12	ATS-1	EPS-ATS1F	%T1	N	
%FA-12	BC-1	EPS-BC1F	%T1	N	
%FA-12	BAT-1	EPS-SB	%T1	N	
%FA-12	DC BUS-1	EPS-	%T1	N	

CDF FIRE PRA MODEL MAPPING TABLE (USE THE EVENT TREES AND FAULT TREES BELOW)					
Fire Initiating Event	**Equipment ID**	**PRA Event Identifier**	**PRA Initiating Event**	**Additional model changes are required to facilitate mapping? (Y or N)**	**Describe modeling strategy to facilitate mapping.**
		125VNSDCBUSF			
%FA-13	LI-1	LI-1_FL	%T1	Y	Spurious instrumentation failure causes operator to prematurely switchover to recirculation
%FA-13	LI-1	LI-1_FH	%T1	Y	Operator fails to switchover to recirculation due to instrumentation failure
%FA-13	LI-2	LI-2_FL	%T1	Y	Spurious instrumentation failure causes operator to prematurely switchover to recirculation
%FA-13	LI-2	LI-2_FH	%T1	Y	Operator fails to switchover to recirculation due to instrumentation failure
%FA-13	SWGR-A	PNL-A / EPS-4VBUSAF-1st	%T1	N	
%FA-13	SWGR-A	PNL-A / EPS-4VBUSAF-2nd	%T1	N	

CDF FIRE PRA MODEL MAPPING TABLE (USE THE EVENT TREES AND FAULT TREES BELOW)					
Fire Initiating Event	**Equipment ID**	**PRA Event Identifier**	**PRA Initiating Event**	**Additional model changes are required to facilitate mapping? (Y or N)**	**Describe modeling strategy to facilitate mapping.**
%FA-13	SWGR-B	PNL-A / EPS-4VBUSBF-1st	%T1	N	
%FA-13	SWGR-B	PNL-A / EPS-4VBUSBF-2nd	%T1	N	
%FA-13	SWGR-1	EPS-4VBUS1F	%T1	N	
%FA-13	SWGR-2	EPS-4VBUS2F	%T1	N	
%FA-13	SUT-1	SUTF	%T1	N	
%FA-15	BAT-1	EPS-SB	%T1	N	

Step 2: Develop LERF or CLERP Model

LERF FIRE PRA MODEL MAPPING TABLE (USE THE EVENT TREES AND FAULT TREES BELOW)					
Fire Initiating Event	**Equipment ID**	**PRA Event Identifier**	**PRA Initiating Event**	**Additional model changes are required to facilitate mapping? (Y or N)**	**Describe modeling strategy to facilitate mapping.**
%FA-4A	MOV-7	MOV-7_TO	%I2TAG	Y	Interfacing Systems LOCA at RCS/RHR Interface (2 MOVs in series)
%FA-7	MOV-7	MOV-7_TO	%I2TAG	Y	Interfacing Systems LOCA at RCS/RHR Interface (2 MOVs in series)
%FA-9	MOV-7	MOV-7_TO	%I2TAG	Y	Interfacing Systems LOCA at RCS/RHR Interface (2 MOVs in series)
%FA-12	MOV-7	MOV-7_TO	%I2TAG	Y	Interfacing Systems LOCA at RCS/RHR Interface (2 MOVs in series)
%FA-4A	MOV-8	MOV-8_TO	%I2TAG	Y	Interfacing Systems LOCA at RCS/RHR Interface

LERF FIRE PRA MODEL MAPPING TABLE (USE THE EVENT TREES AND FAULT TREES BELOW)					
Fire Initiating Event	**Equipment ID**	**PRA Event Identifier**	**PRA Initiating Event**	**Additional model changes are required to facilitate mapping? (Y or N)**	**Describe modeling strategy to facilitate mapping.**
					(2 MOVs in series)
%FA-9	MOV-8	MOV-8_TO	%I2TAG	Y	Interfacing Systems LOCA at RCS/RHR Interface (2 MOVs in series)
%FA-12	MOV-8	MOV-8_TO	%I2TAG	Y	Interfacing Systems LOCA at RCS/RHR Interface (2 MOVs in series)

Task 5 model changes

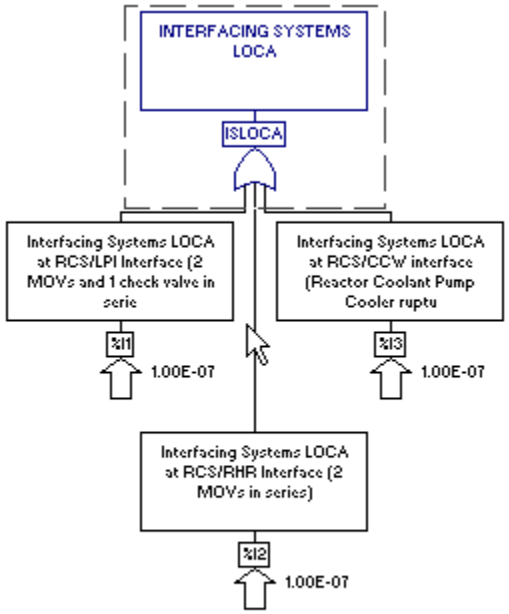

Figure 1: Gate ISLOCA – Before

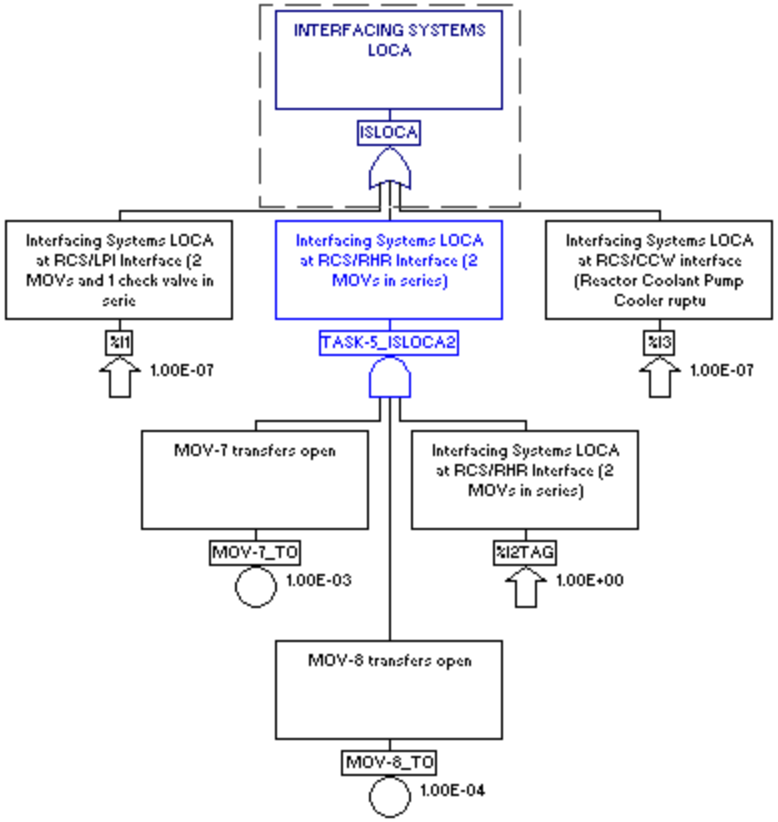

Figure 2: Gate ISLOCA – After

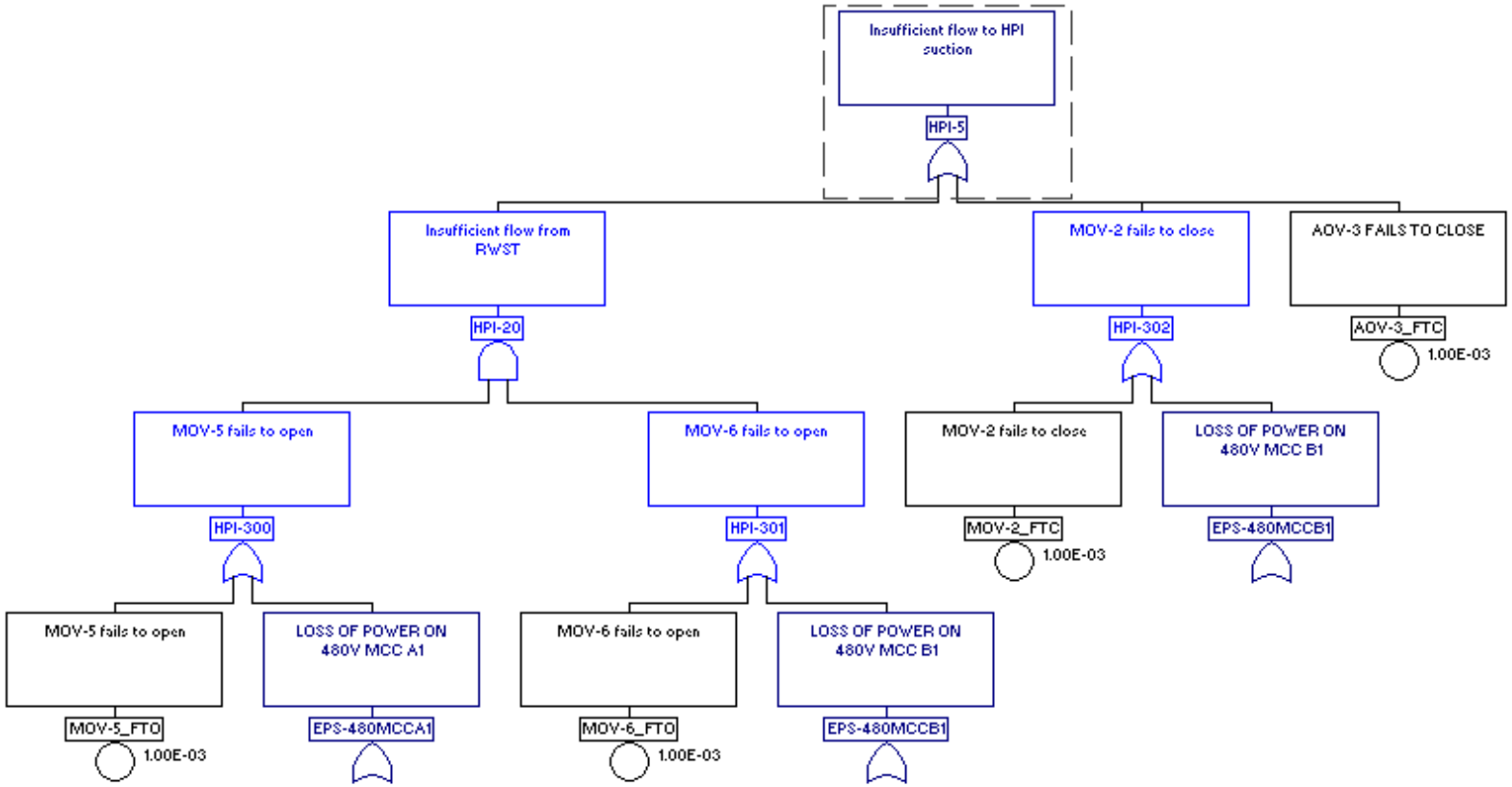

Figure 3: Gate HPI-5 Before

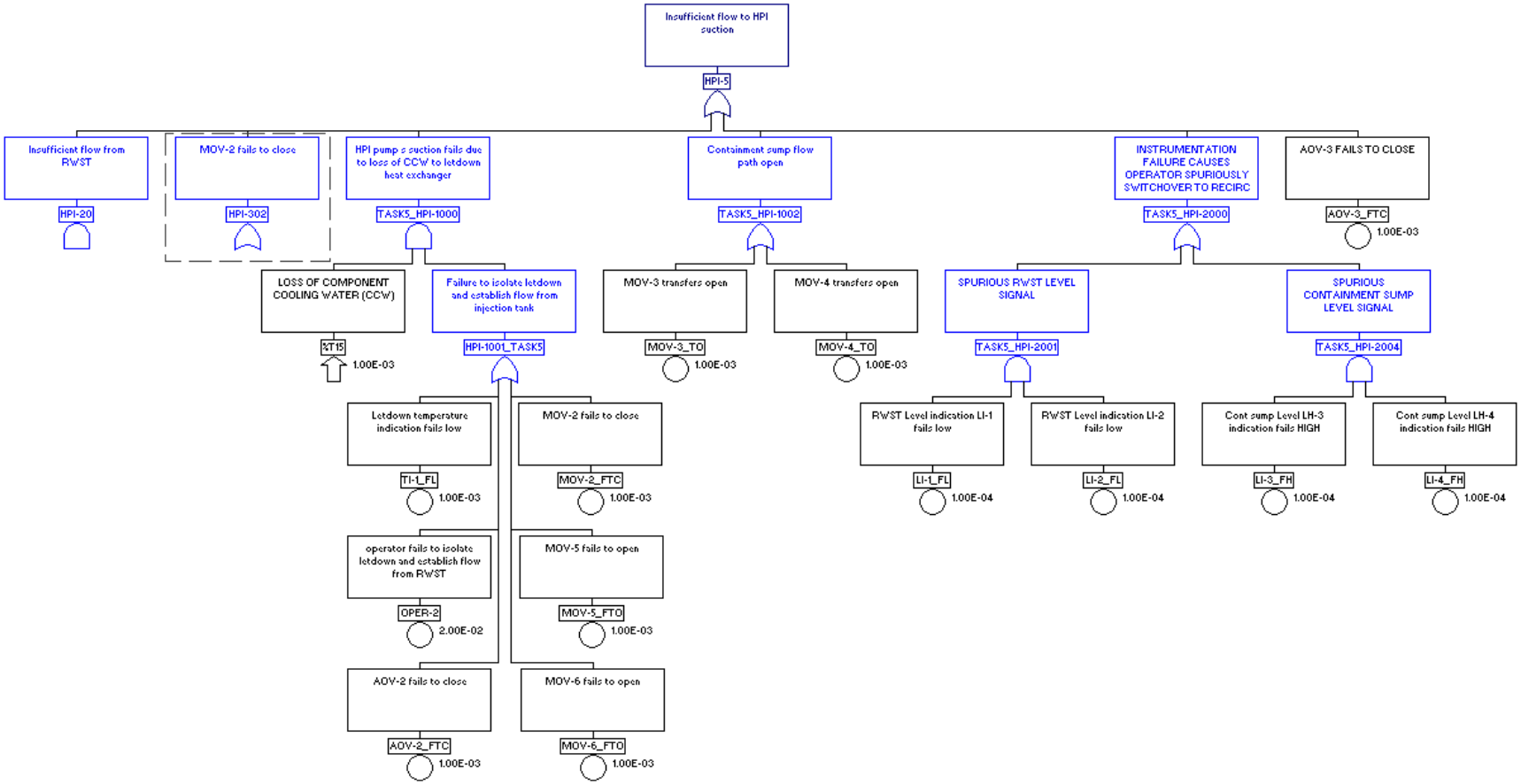

Figure 4: Gate HPI-5 After

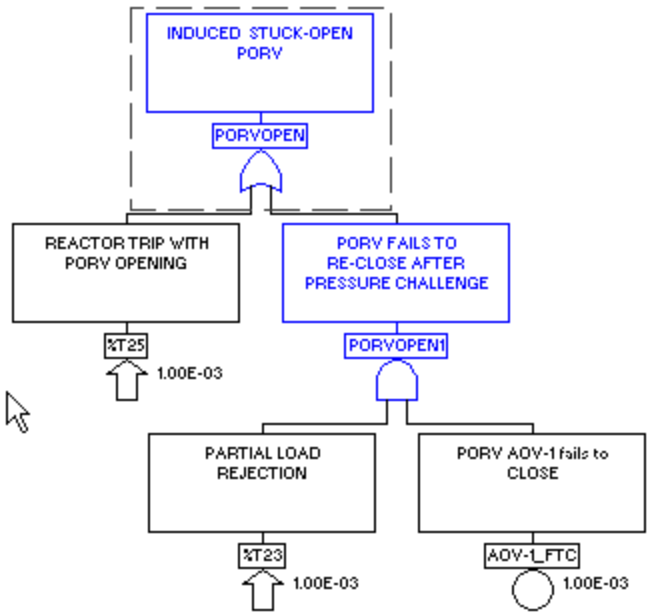

Figure 5: Gate PORVOPEN Before

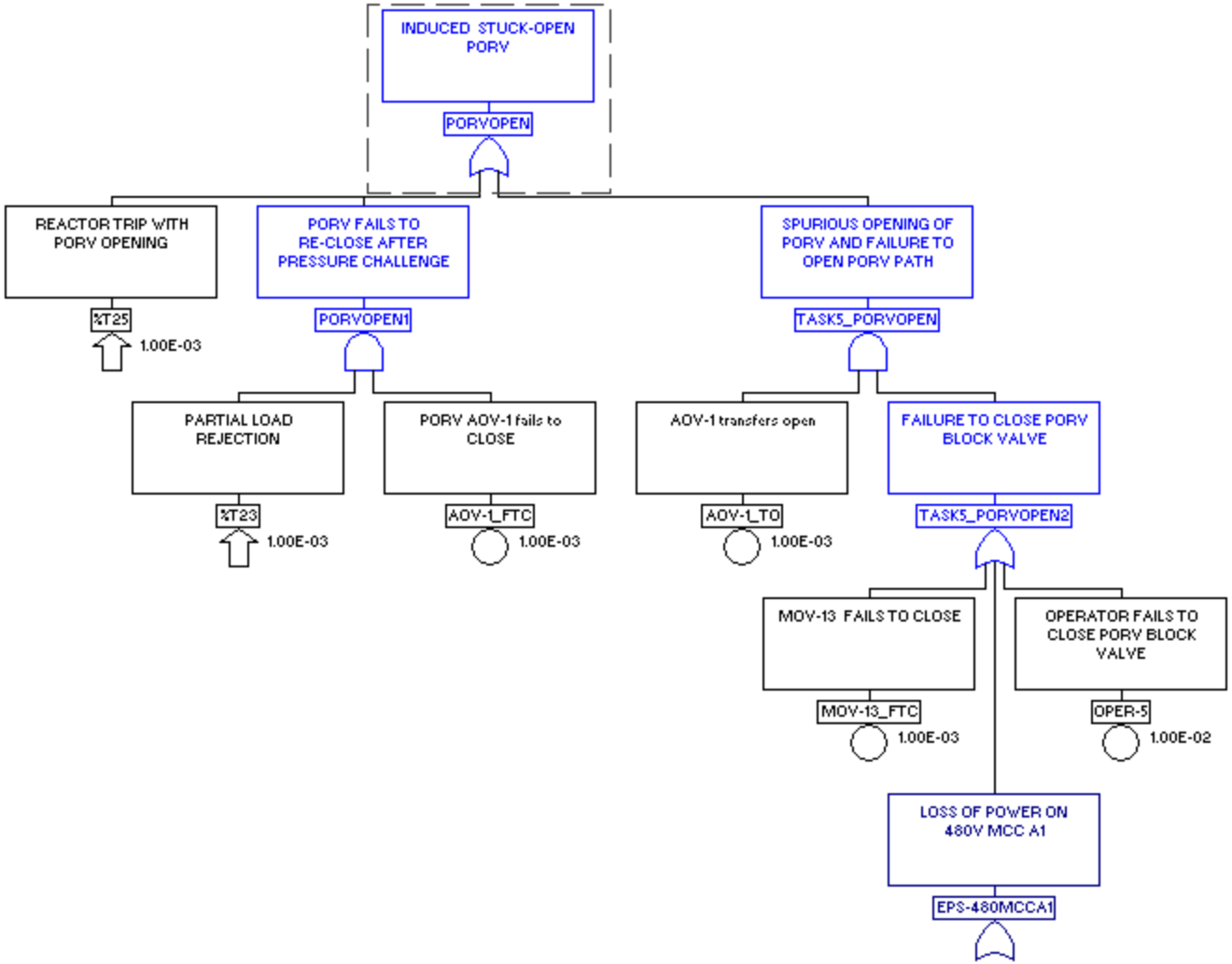

Figure 6: Gate PORVOPEN After

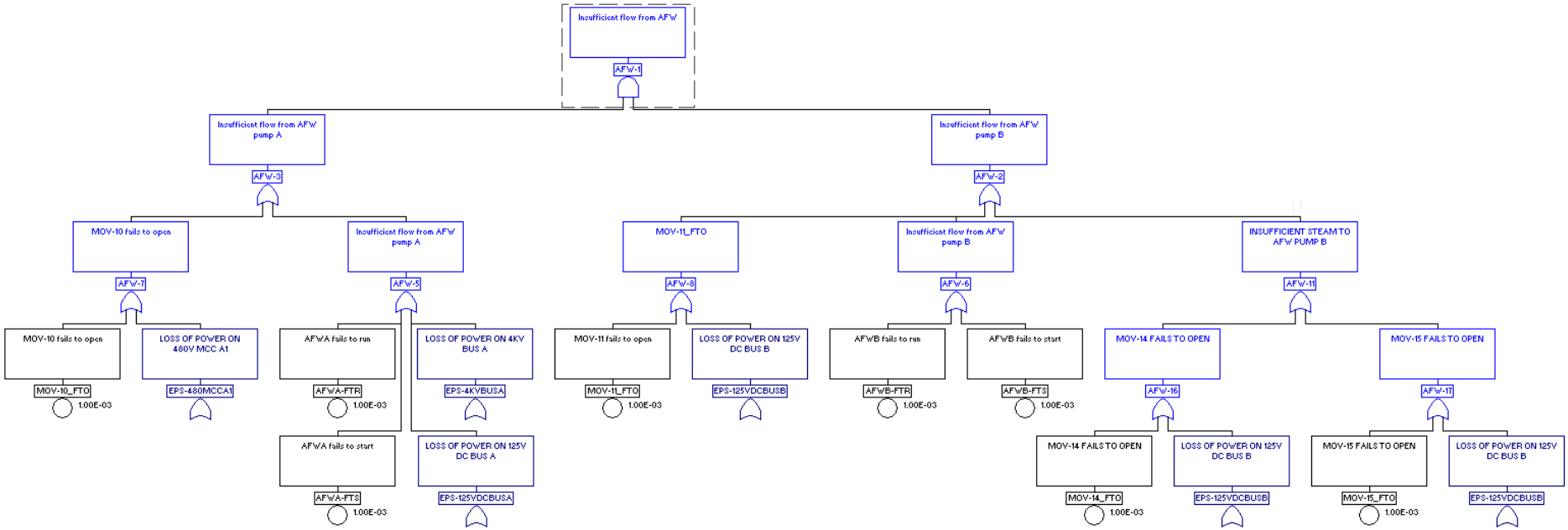

Figure 7: Gate AFW-1 Before

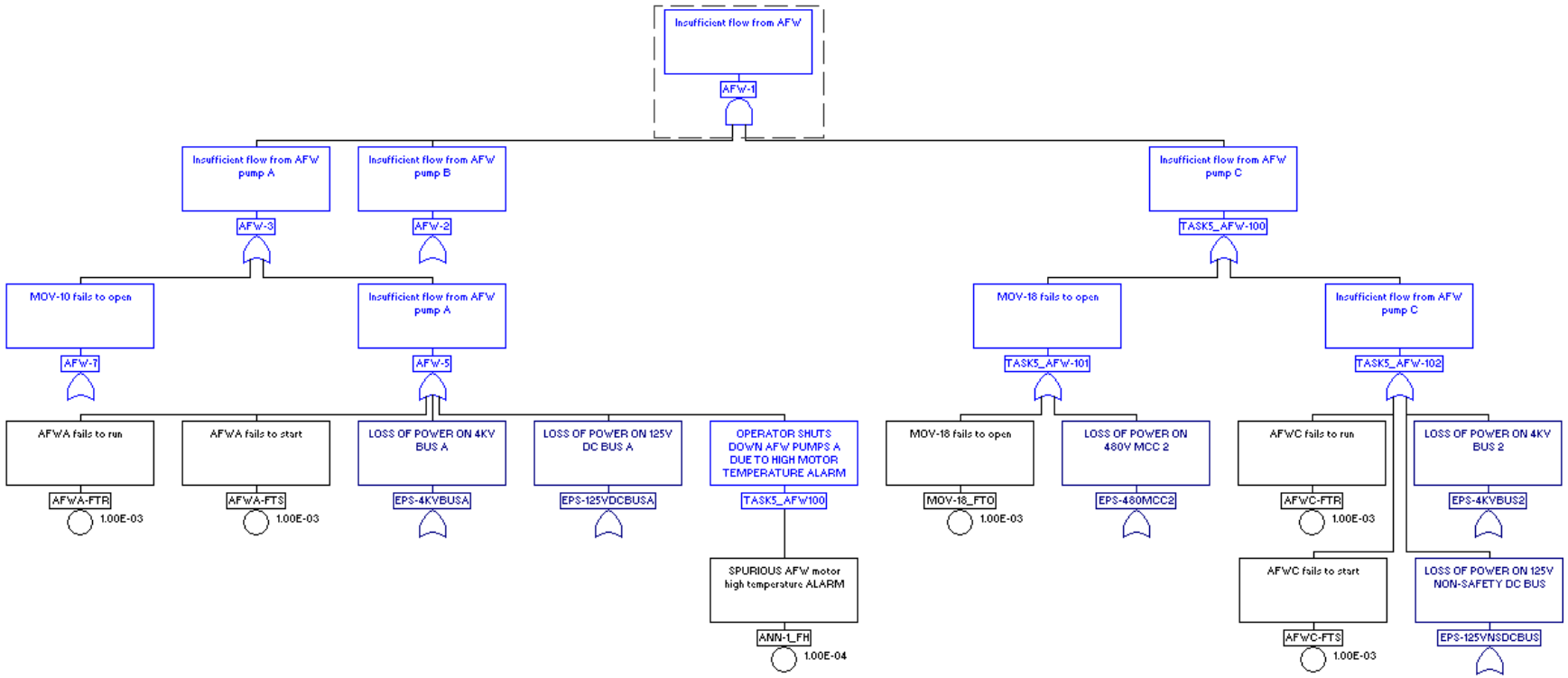

Figure 8:Gate AFW-1 After

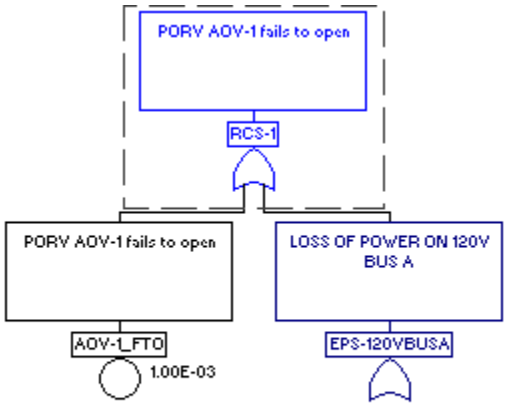

Figure 9: Gate RCS-1 Before

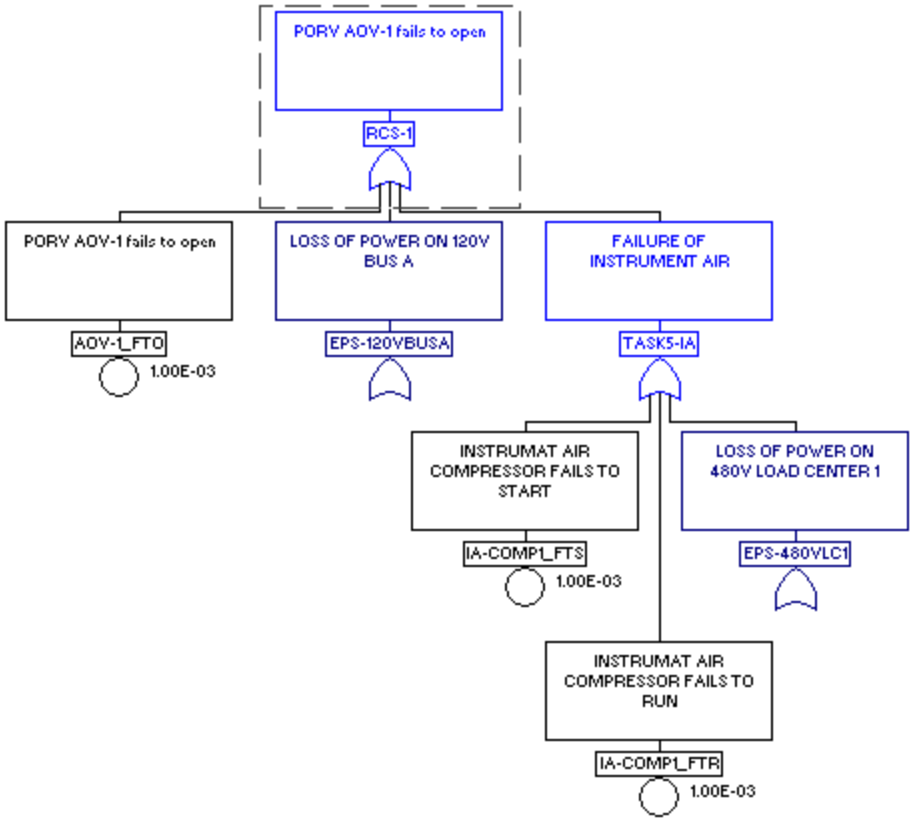

Figure 10: Gate RCS-1 After

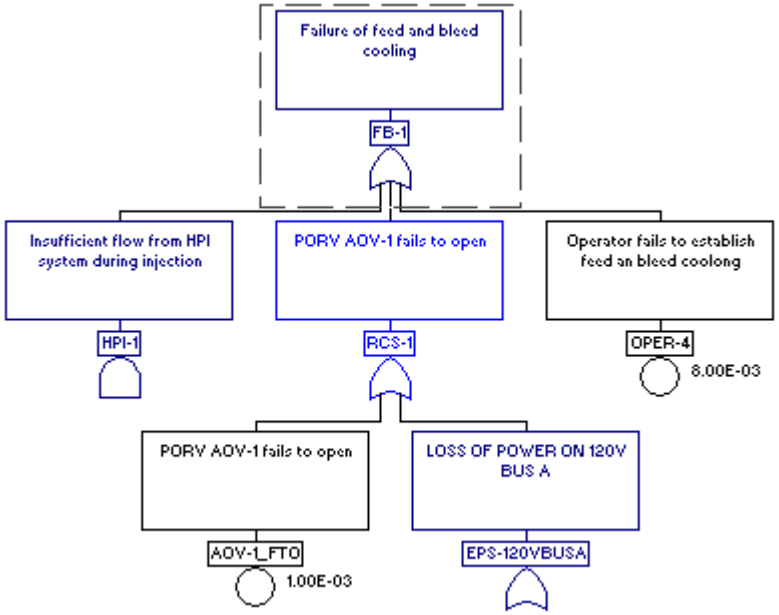

Figure 11: Gate FB-1 Before

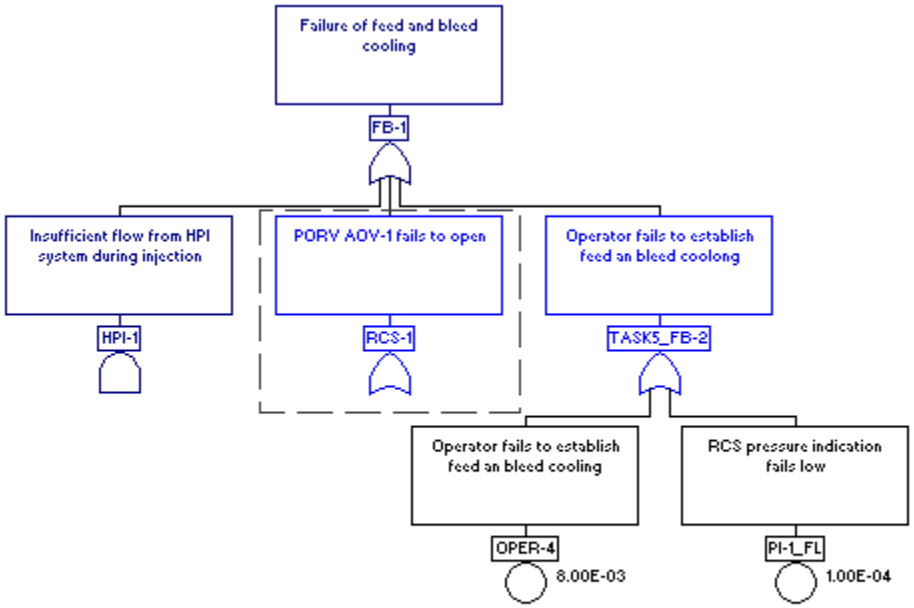

Figure 12: Gate FB-1 After

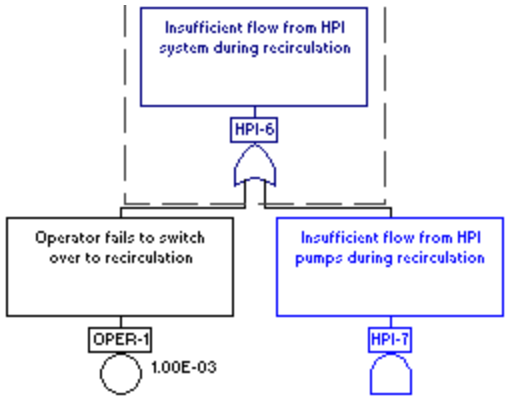

Figure 13: Gate HPI-6 Before

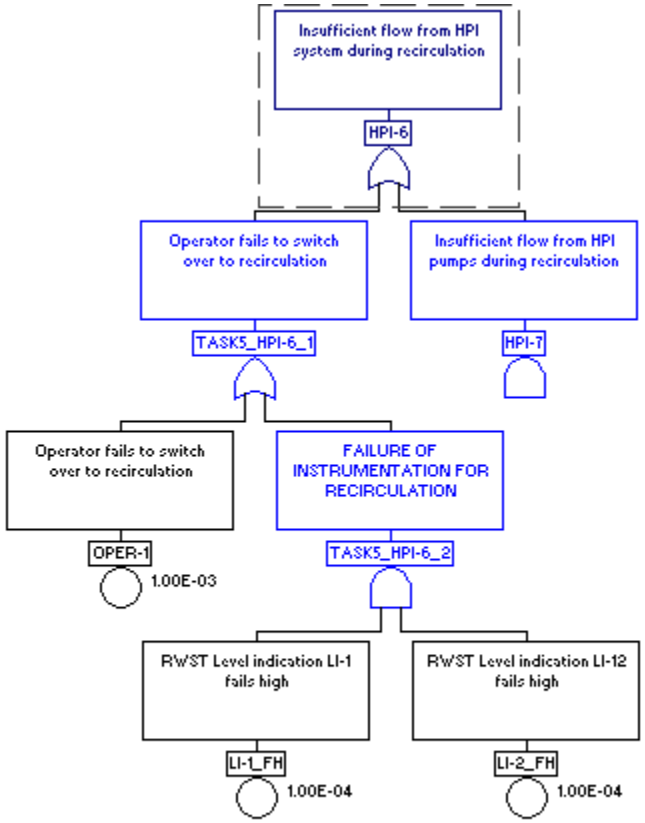

Figure 14: Gate HPI-6 After

Task 5 Inputs

Table 1: Target Equipment Loss Report

Equipment ID	Equipment Description	Equipment Type	Location	Desired Position/ Status	Target Loss Locations
HPI-A	High pressure safety injection pump A	Pump	Aux Bldg. El. 0 Ft	On	1, 2, 3, 10
				On	1, 2, 3, 10
HPI-B	High pressure safety injection pump B	Pump	Aux Bldg. El. 0 Ft	On	1, 2, 3, 11
				On	1, 2, 3, 11
RHR	Residual heat removal pump	Pump	Aux Bldg. El. -20 Ft	Off	1, 2, 3, 4A, 9, 11
AFW-A	Motor driven AFW pump A	Pump	Aux Bldg. EL. 0 Ft	On	1, 3, 4B, 9, 10
AFW-B	Steam driven AFW pump B	Pump	Aux Bldg. EL. 0 Ft	On	1, 3, 4B, 9, 11
AFW-C	Motor driven AFW pump C	Pump	Turbine Bldg. El. 0 Ft	On	1, 3, 12
RCP	Reactor coolant pump	Pump	Containment	Off	1, 2, 3, 7, 12
COMP-1	Instrument air compressor	Compressor	Turbine Bldg. El. 0 Ft	Cycle	12
AOV-1 (SOV-1)	Power operated relief valve	AOV	Containment	Closed	1, 3, 7, 9
				Open	1, 3, 7, 9, 10
AOV-2 (SOV-2)	Letdown isolation valve	AOV	Aux Bldg. El. 0 Ft	Closed	1, 2, 3, 9
AOV-3 (SOV-3)	Charging pump injection valve	AOV	Aux Bldg. El. 0 Ft	Closed	1, 2, 3, 9

Equipment ID	Equipment Description	Equipment Type	Location	Desired Position/ Status	Target Loss Locations
MOV-1	HPI discharge valve	MOV	Aux Bldg. El. 0 Ft	Open	1, 2, 3, 9, 10
MOV-2	VCT isolation valve	MOV	Aux Bldg. El. 0 Ft	Closed	1, 2, 3, 9, 11
MOV-3	Cont. sump recirc. valve	MOV	Aux Bldg. El. -20 Ft	Open/ Closed[2]	1, 2, 3, 4A, 9, 10
MOV-4	Cont. sump recirc. valve	MOV	Aux Bldg. El. -20 Ft	Open/ Closed	1, 2, 3, 4A, 9, 11
MOV-5	RWST isolation valve	MOV	Aux Bldg. El. 0 Ft	Open	1, 2, 3, 12
MOV-6	RWST isolation valve	MOV	Aux Bldg. El. 0 Ft	Open	1, 2, 3, 12
MOV-7	RHR inboard suction valve	MOV	Containment	Closed	4A,7,9,12
MOV-8	RHR outboard suction valve	MOV	Aux Bldg. El. -20 Ft	Closed	4A,9,12
MOV-9	HPI discharge valve	MOV	Aux Bldg. El. 0 Ft	Open	1,2,3,,9
MOV-10	AFW pump A discharge valve	MOV	Aux Bldg. EL. 0 Ft	Open	1,3,4B,9,12
MOV-11	AFW pump B discharge valve	MOV	Aux Bldg. EL. 0 Ft	Open	1,3,4B,9,11,12
MOV-13	PORV block valve	MOV	Containment	Open/ Closed[1]	1, 3, 7, 9
MOV-14	AFW pump B turbine steam line isolation valve	MOV	Turbine Bldg. El. 0 Ft	Open	1, 3, 4B, 12
MOV-15	AFW pump B steam inlet throttle valve	MOV	Turbine Bldg. El. 0 Ft	Throttled	1, 3, 4B, 12
MOV-18	AFW pump C discharge valve	MOV	Turbine Bldg. El. 0 Ft	Open	1, 3, 12
V-12	CST isolation valve	MOV	Turbine Bldg. El. 0 Ft	Open	12

Equipment ID	Equipment Description	Equipment Type	Location	Desired Position/ Status	Target Loss Locations
LI-1	RWST level	Instrument	Yard	Available	1, 3, 12, 13
LI-2	RWST level	Instrument	Yard	Available	1, 3, 12, 13
LI-3	Cont. sump level	Instrument	Containment	Available	1, 3, 7, 12
LI-4	Cont. sump level	Instrument	Containment	Available	1, 3, 7, 12
TI-1	Letdown heat exchanger outlet temperature	Instrument	Aux Bldg El. 0 Ft	Available	1, 2, 3, 9
PT-1	RCS pressure	Instrument	Containment	Available	1, 3, 7
A-1	AFW motor high temperature	Annunciator	SWG Access Room	Non spurious	1, 2, 3, 9, 4B
SWGR-A	Train A 4160 V switchgear	Switchgear	Switchgear Room A	Energized from SUT-1	1, 3, 10, 12, 13
				Energized from EDG-A	1, 3, 8A, 10, 12
SWGR-B	Train B 4160 V switchgear	Switchgear	Switchgear Room B	Energized from SUT-1	1, 3, 9, 11, 12, 13
				Energized from EDG-A	1, 3, 8B, 9, 11, 12
SWGR-1	Non-safety 4160 V switchgear	Switchgear	Turbine Bldg. El. 0ft	Energized	1, 3, 12, 13
SWGR-2	Non-safety 4160 V switchgear	Switchgear	Turbine Bldg. El. 0ft	Energized	1, 3, 12, 13
SUT-1	Startup transformer	Transformer	Yard	Energized	1, 3, 12, 13

Equipment ID	Equipment Description	Equipment Type	Location	Desired Position/ Status	Target Loss Locations
EDG-A	Train A emergency diesel generator	Diesel Generator	DG Bldg.	On	1, 3, 8A, 10, 12
EDG-B	Train B emergency diesel generator	Diesel Generator	DG Bldg.	On	1, 3, 8B, 10, 12
LC-1	Non-safety 480 V load center	Load Center	Turbine Bldg. El. 0 ft	Energized	1, 3, 12
LC-2	Non-safety 480 V load center	Load Center	Turbine Bldg. El. 0 ft	Energized	1, 3, 12
LC-A	Train A 480 V load center	Load Center	Switchgear Room A	Energized	1, 3,10
LC-B	Train B 480 V load center	Load Center	Switchgear Room B	Energized	1, 3, 11
SST-1	Non-safety station service transformer	Transformer	Turbine Bldg. El. 0 F	Energized	12
SST-2	Non-safety station service transformer	Transformer	Turbine Bldg. El. 0 F	Energized	12
SST-A	Train A station service transformer	Transformer	Switchgear Room A	Energized	10
SST-B	Train B station service transformer	Transformer	Switchgear Room B	Energized	11
MCC-1	Non-safety 480 V motor control center	Motor Control Center	Turbine Bldg El. 0 Ft	Energized	12
MCC-2	Non-safety 480 V motor control center	Motor Control Center	Turbine Bldg El. 0 Ft	Energized	12
MCC-A1	Train A 480 V motor control center	Motor Control Center	SWG Access Room	Energized	9, 10
MCC-B1	Train B 480 V motor control center	Motor Control Center	SWG Access Room	Energized	9, 11
ATS-1	Automatic transfer switch	ATS	SWG Access Room	Energized from MCC-1	12
BC-1	Non-safety swing battery charger	Battery Charger	Turbine Bldg El. 0 Ft	Energized	12

Equipment ID	Equipment Description	Equipment Type	Location	Desired Position/ Status	Target Loss Locations
BC-A	Train A battery charger	Battery Charger	Switchgear Room A	Energized	9, 10
BC-B	Train B battery charger	Battery Charger	Switchgear Room B	Energized	9, 11
BAT-1	Non-safety battery	Battery	Turbine Bldg El. 0 Ft	Available	12, 15
BAT-A	Train A battery	Battery	Battery Room A	Available	5, 10
BAT-B	Train B battery	Battery	Battery Room B	Available	6, 11
DC BUS-1	Non-safety 250 VDC bus	DC Bus	Turbine Bldg El. 0 Ft	Energized	12
DC BUS-A	Train A 125 VDC bus	DC Bus	Switchgear Room A	Energized	10
DC BUS-B	Train B 125 VDC bus	DC Bus	Switchgear Room B	Energized	11
PNL-A	Train A 125 VDC panel	Panel board	Switchgear Room A	Energized	10
PNL-B	Train B 125 VDC panel	Panel board	Switchgear Room B	Energized	11
INV-A	Train A inverter	Inverter	Switchgear Room A	Energized	3, 9, 10
INV-B	Train B inverter	Inverter	Switchgear Room B	Energized	3, 9, 11
VITAL-A	Train A 120 VAC vital bus	120VAC Bus	SWG Access Room	Energized	9, 10
VITAL-B	Train B 120 VAC vital bus	120VAC Bus	SWG Access Room	Energized	9, 11

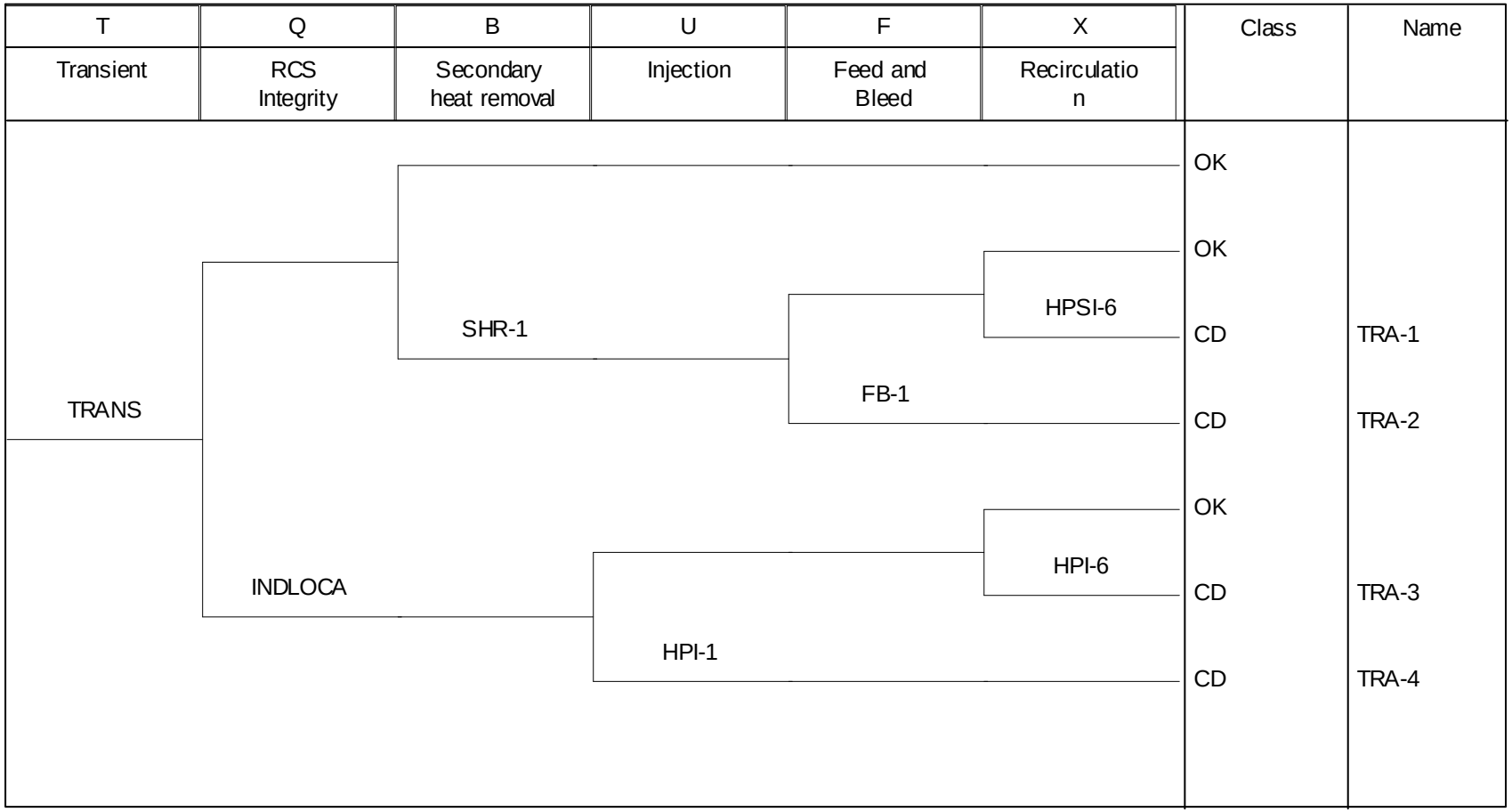

Figure 15: Transient Event Tree

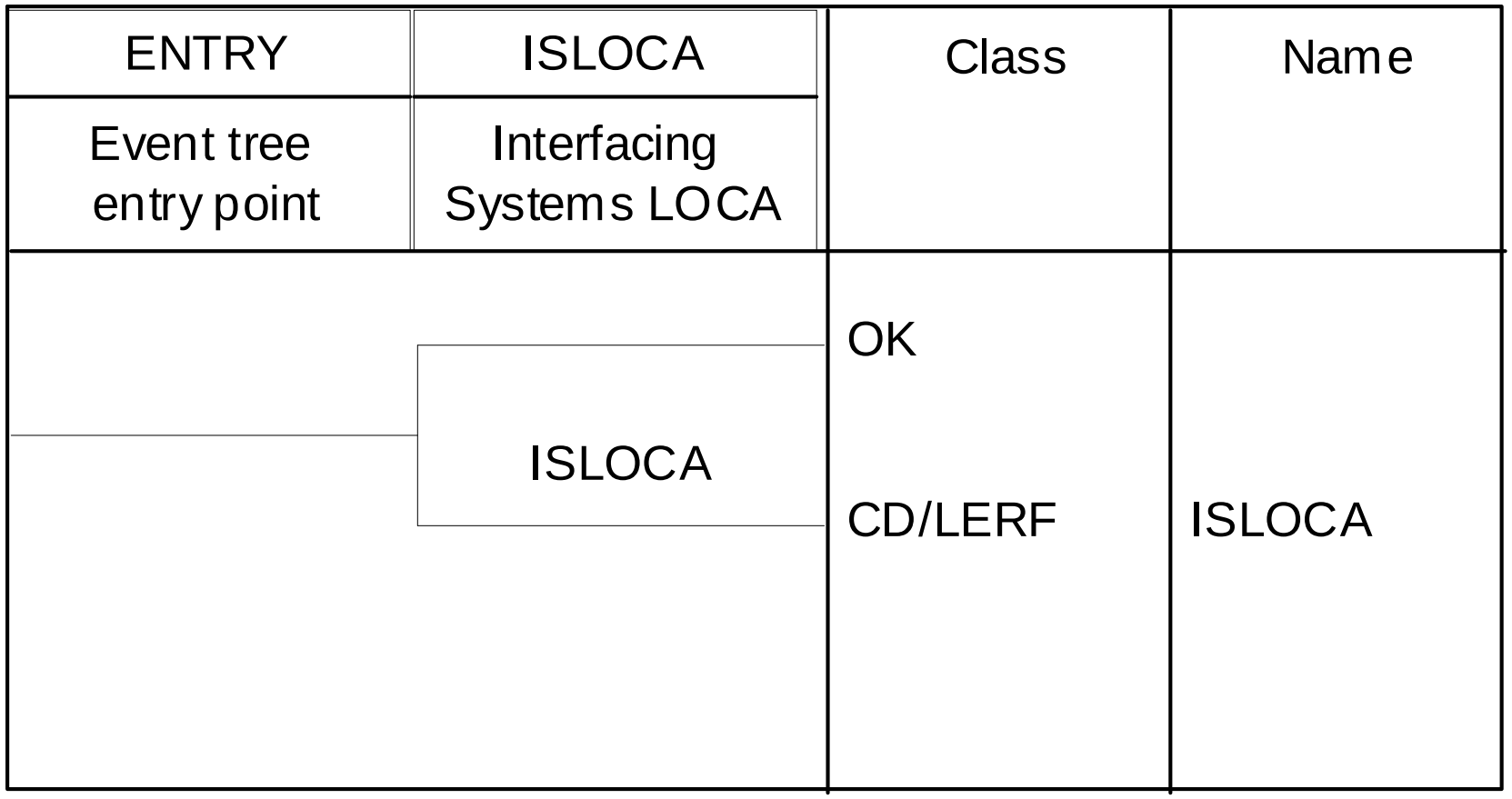

Figure 16: ISLOCA Event Tree

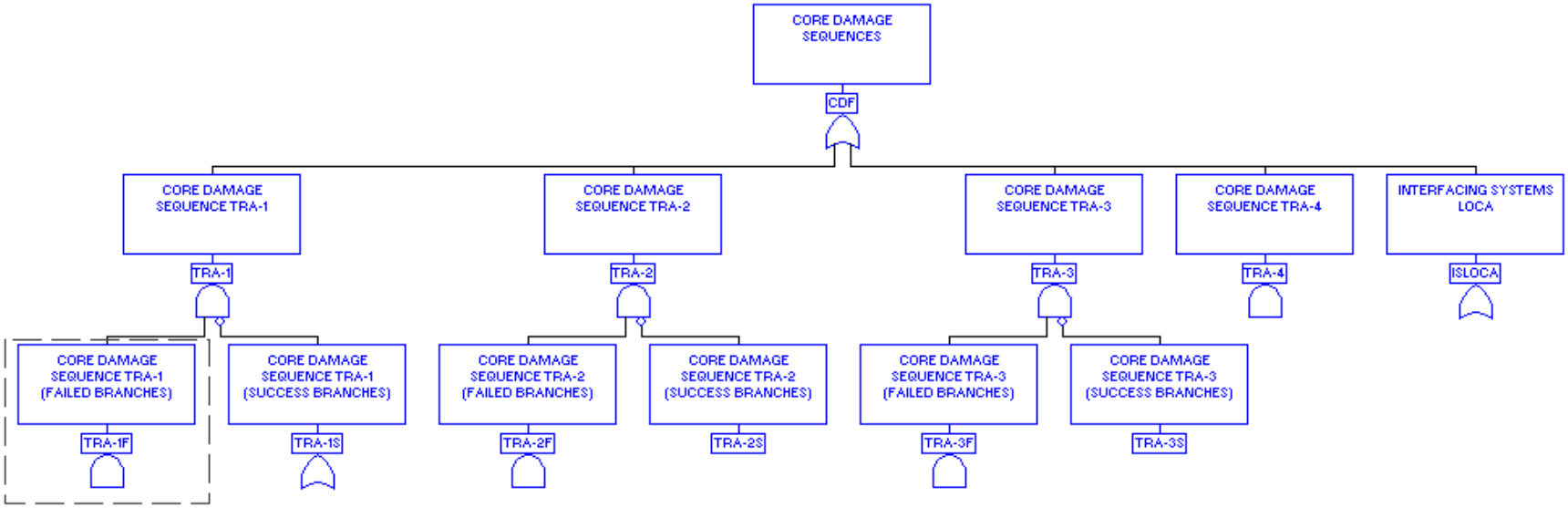

Figure 17: Gate CDF

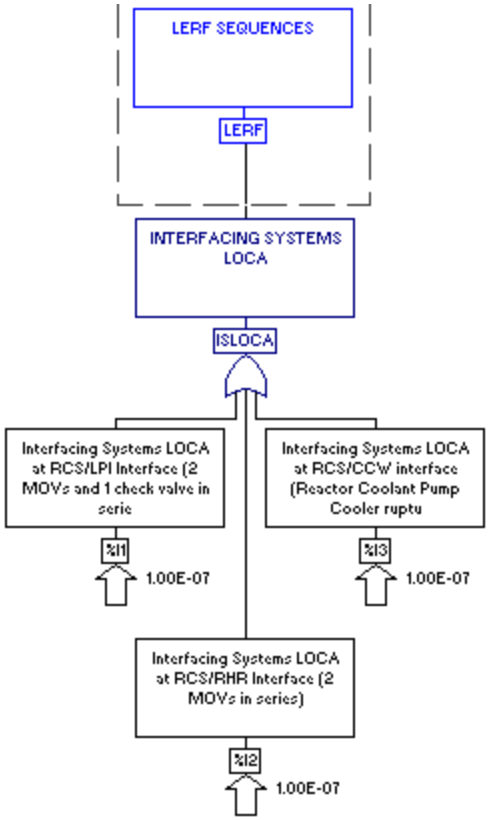

Figure 18: Gate LERF

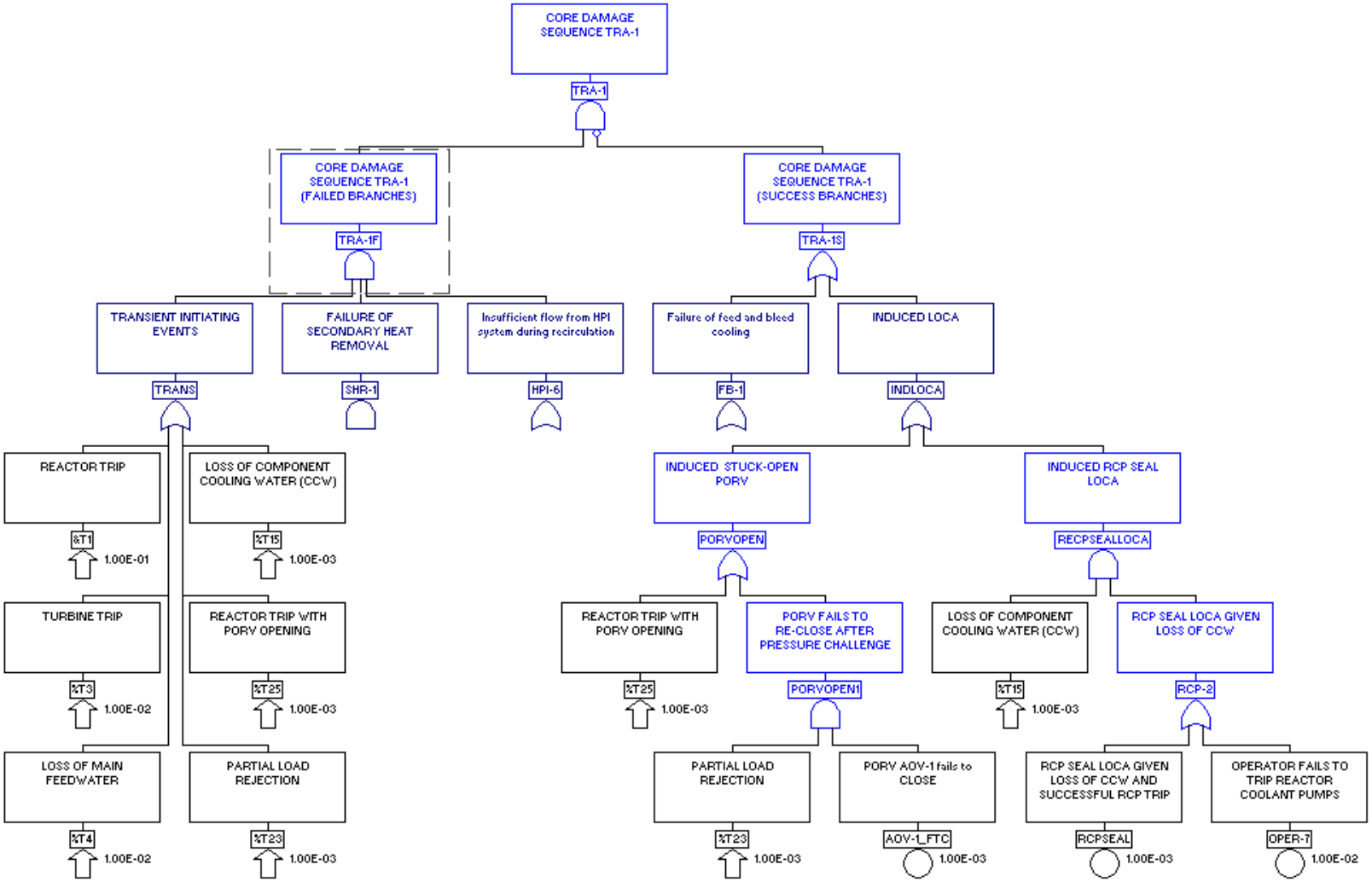

Figure 19: Gate TRA-1

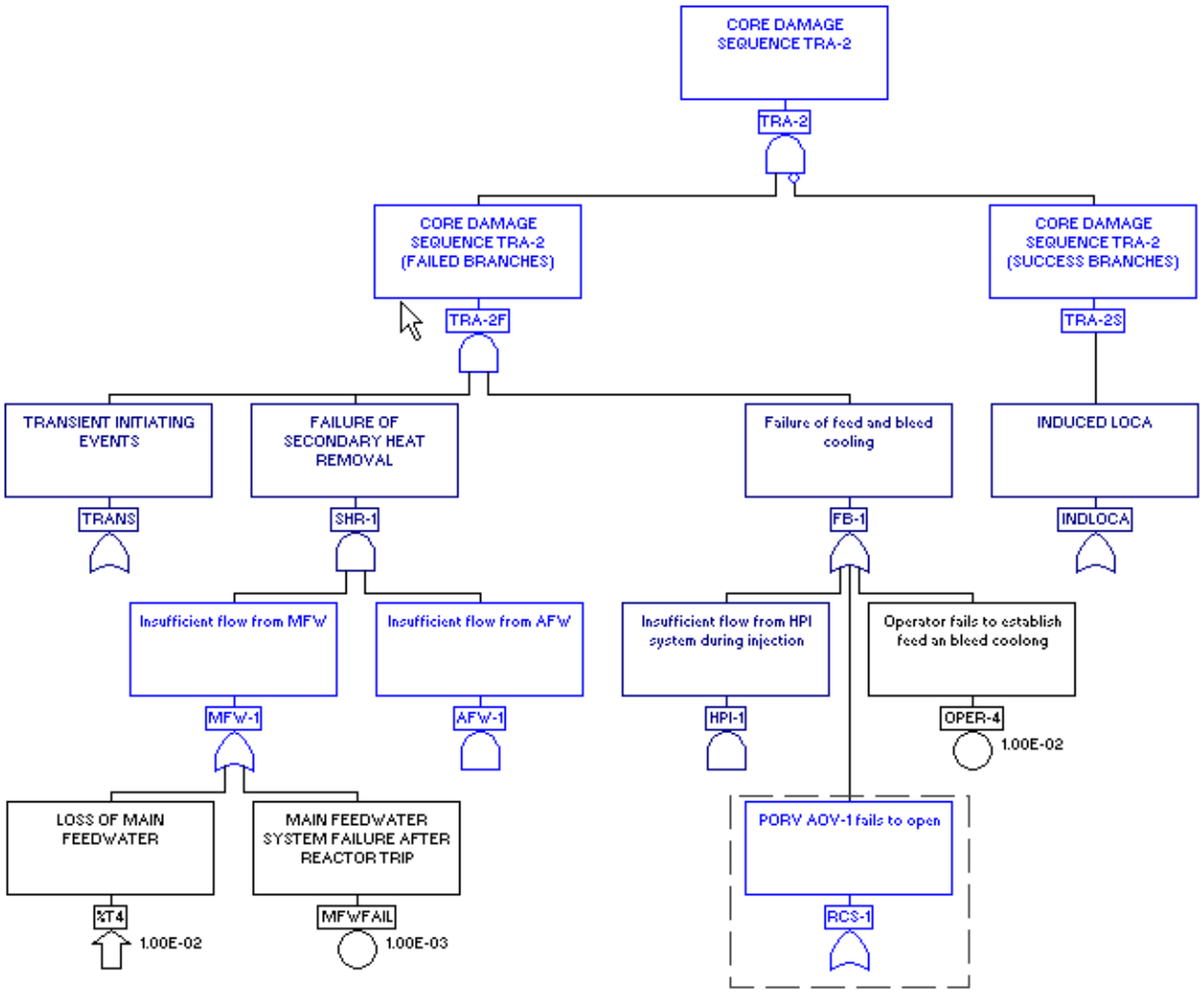

Figure 20: Gate TRA-2

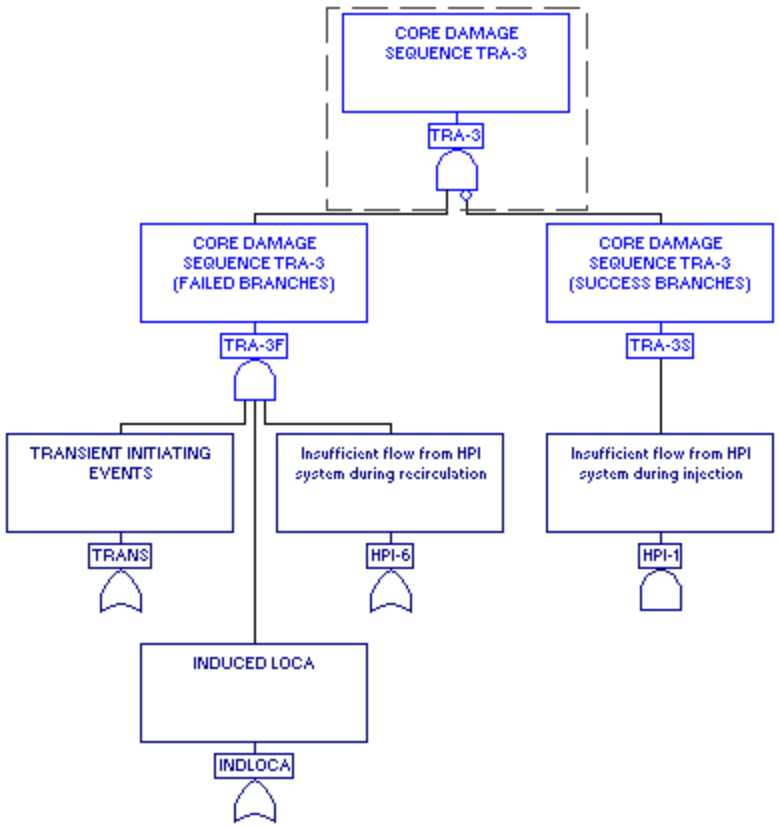

Figure 21: Gate TRA-3

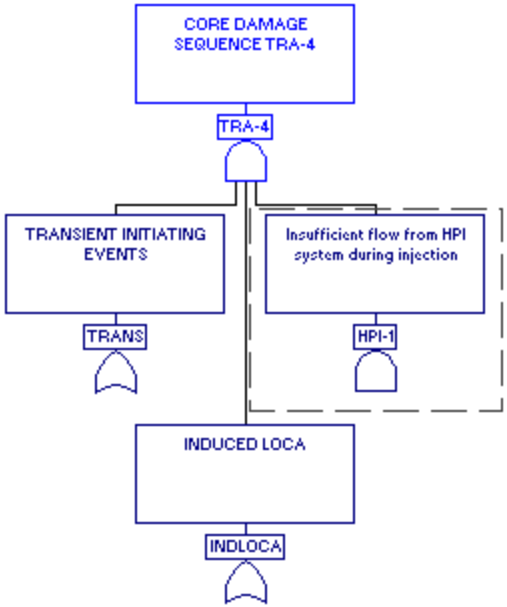

Figure 22: Gate TRA-4

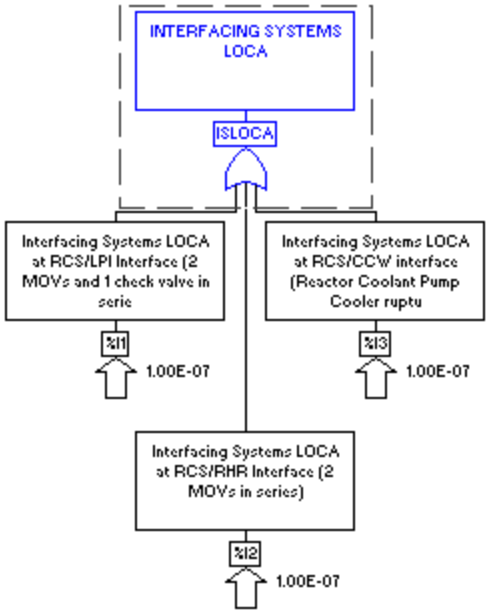

Figure 23: Gate ISLOCA

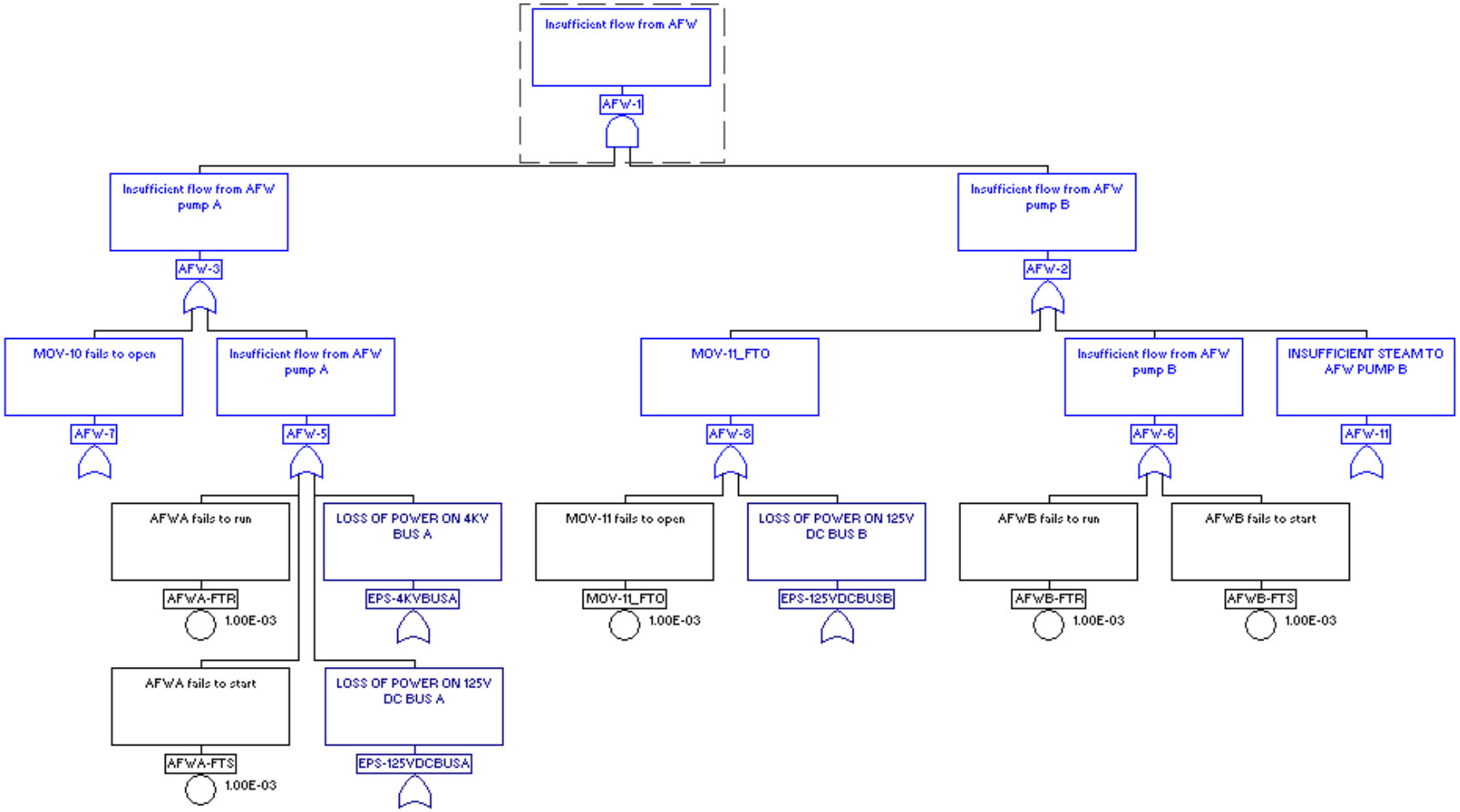

Figure 24: Gate AFW-1

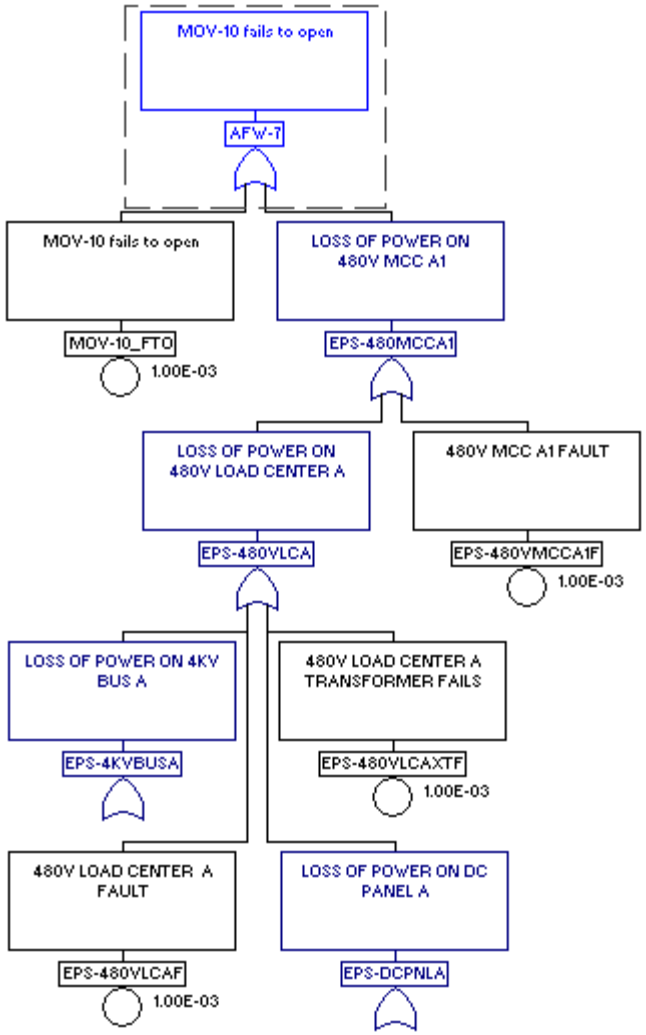

Figure 25: Gate AFW-7

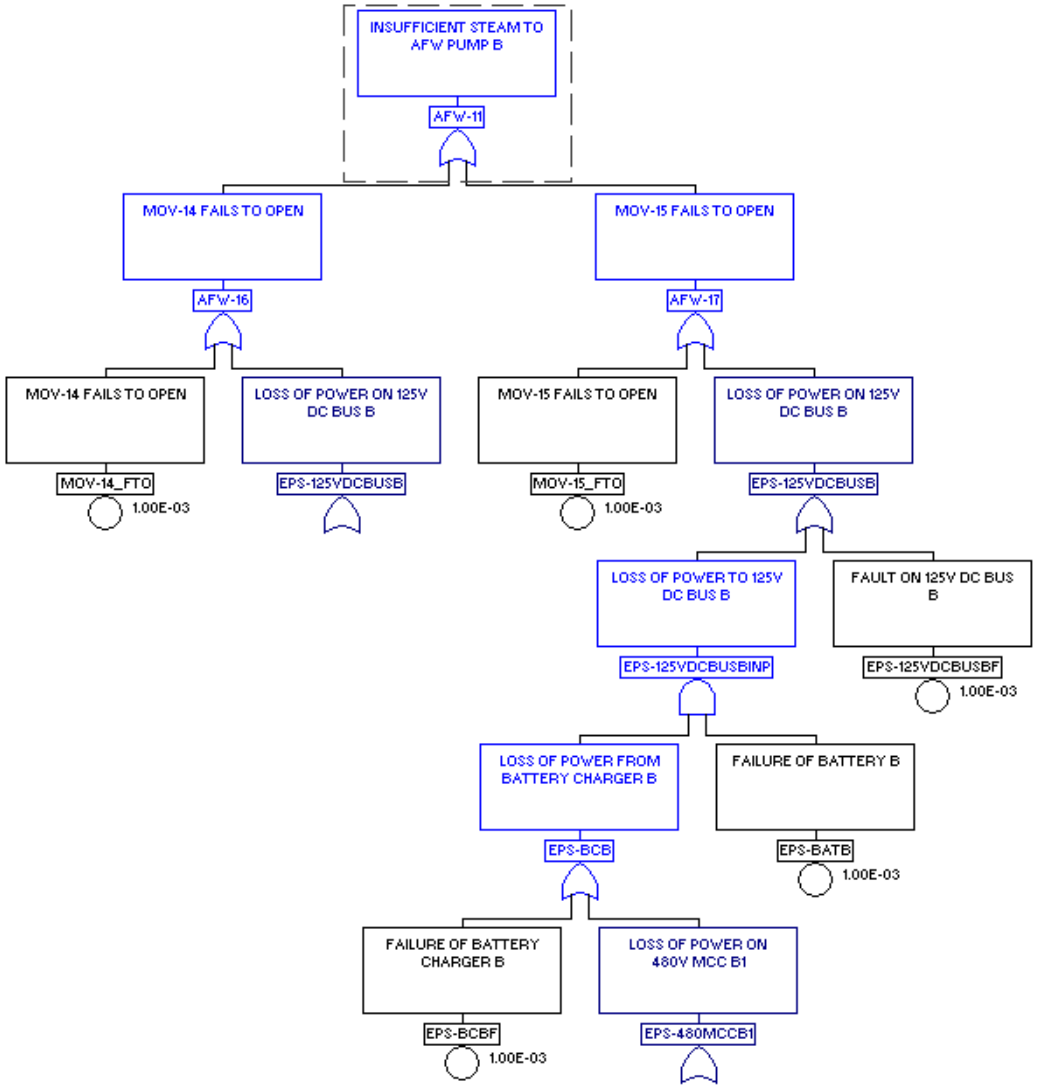

Figure 26: Gate AFW-11

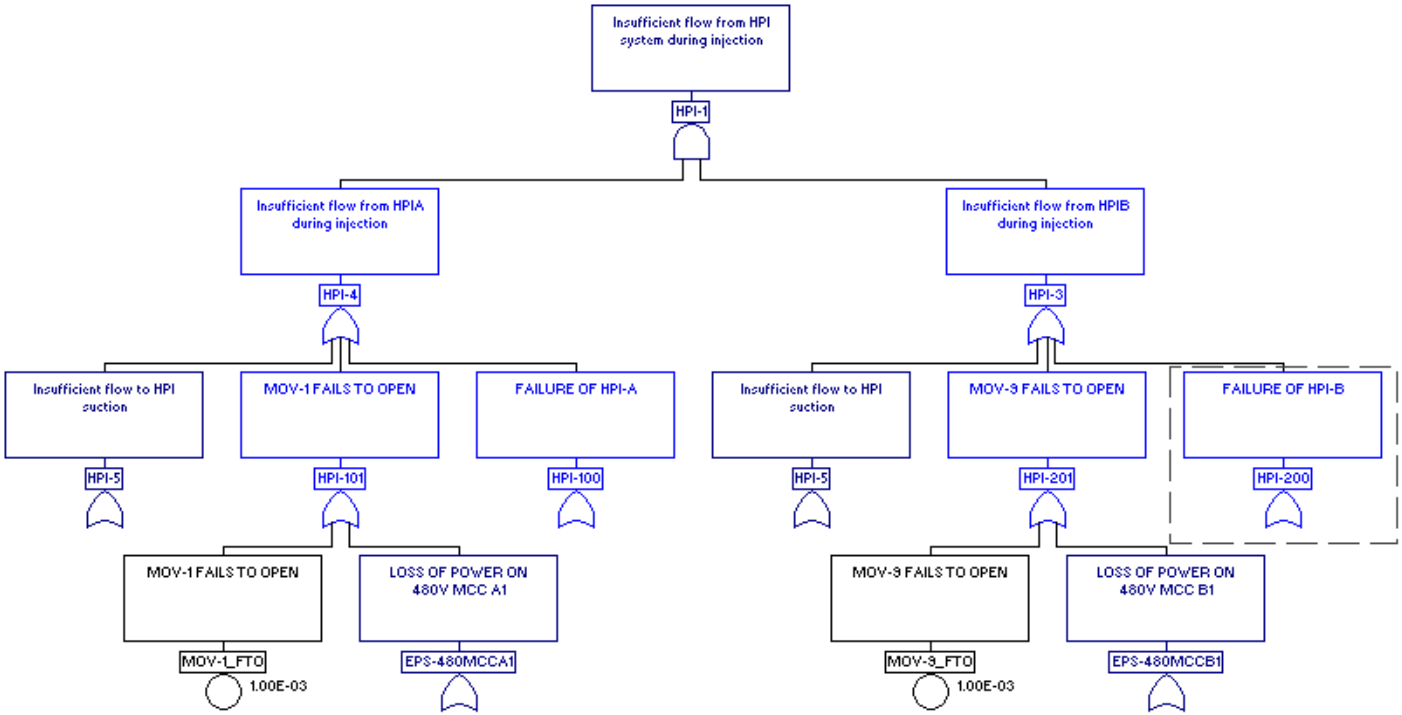

Figure 27: Gate HPI-1

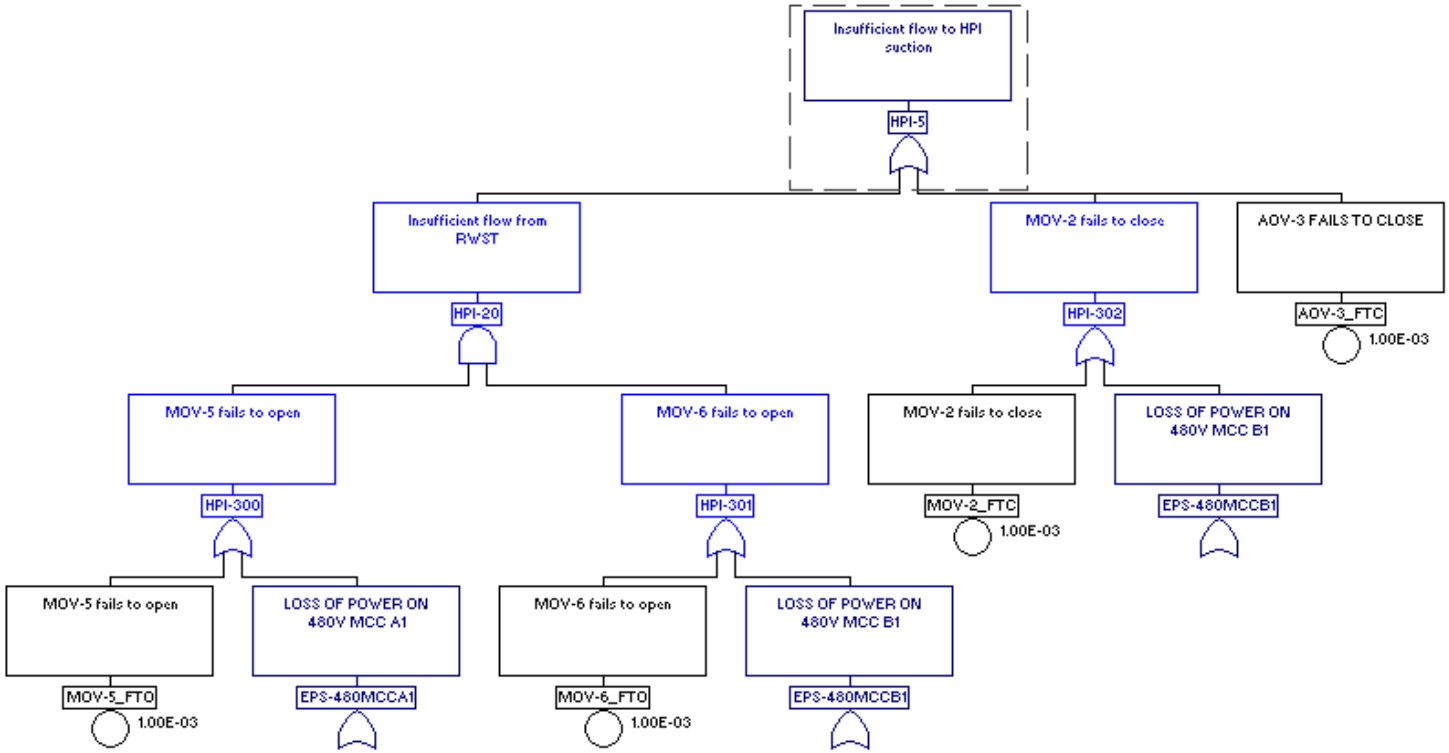

Figure 28: Gate HPI-5

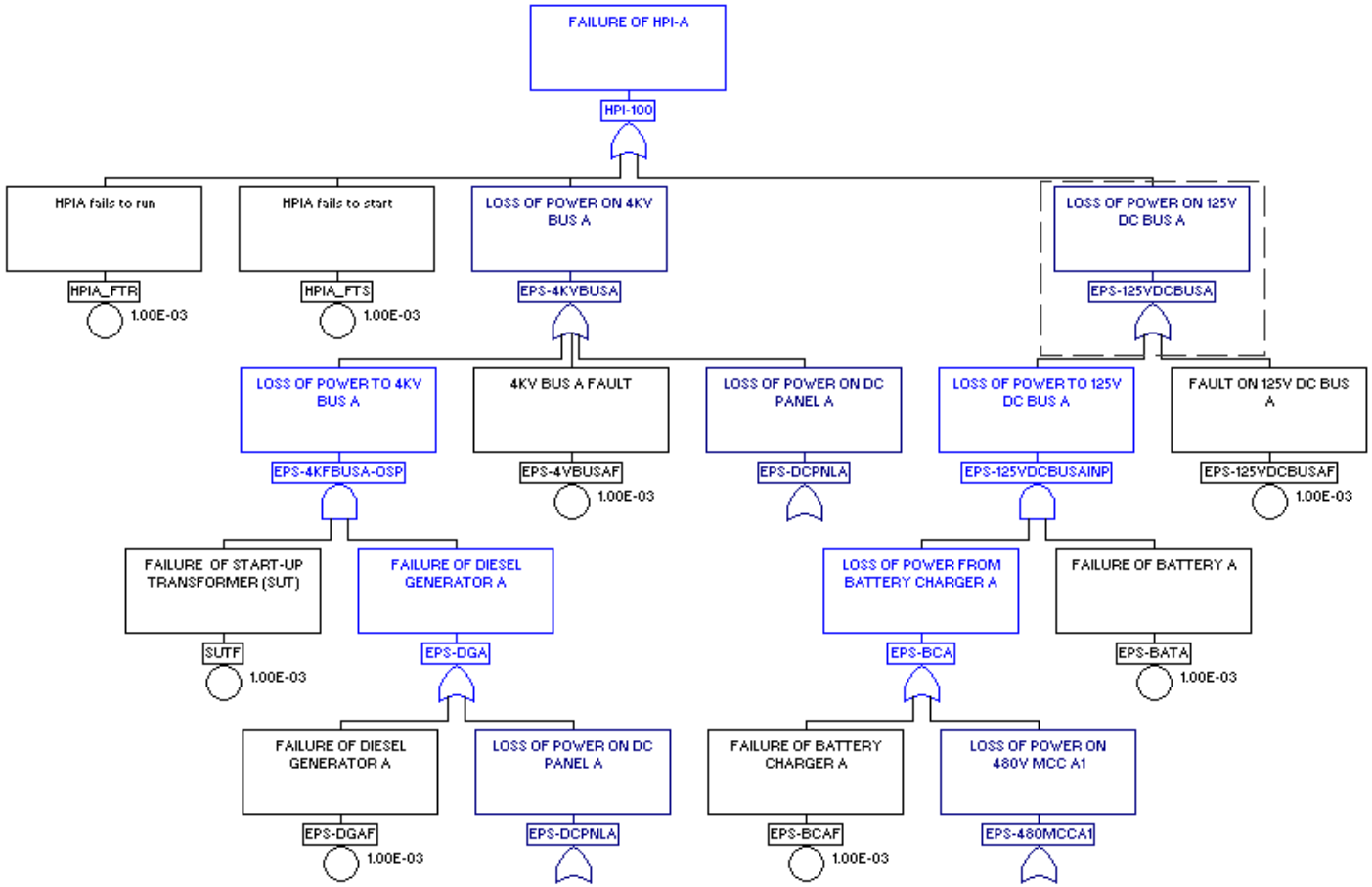

Figure 29: Gate HPI-100

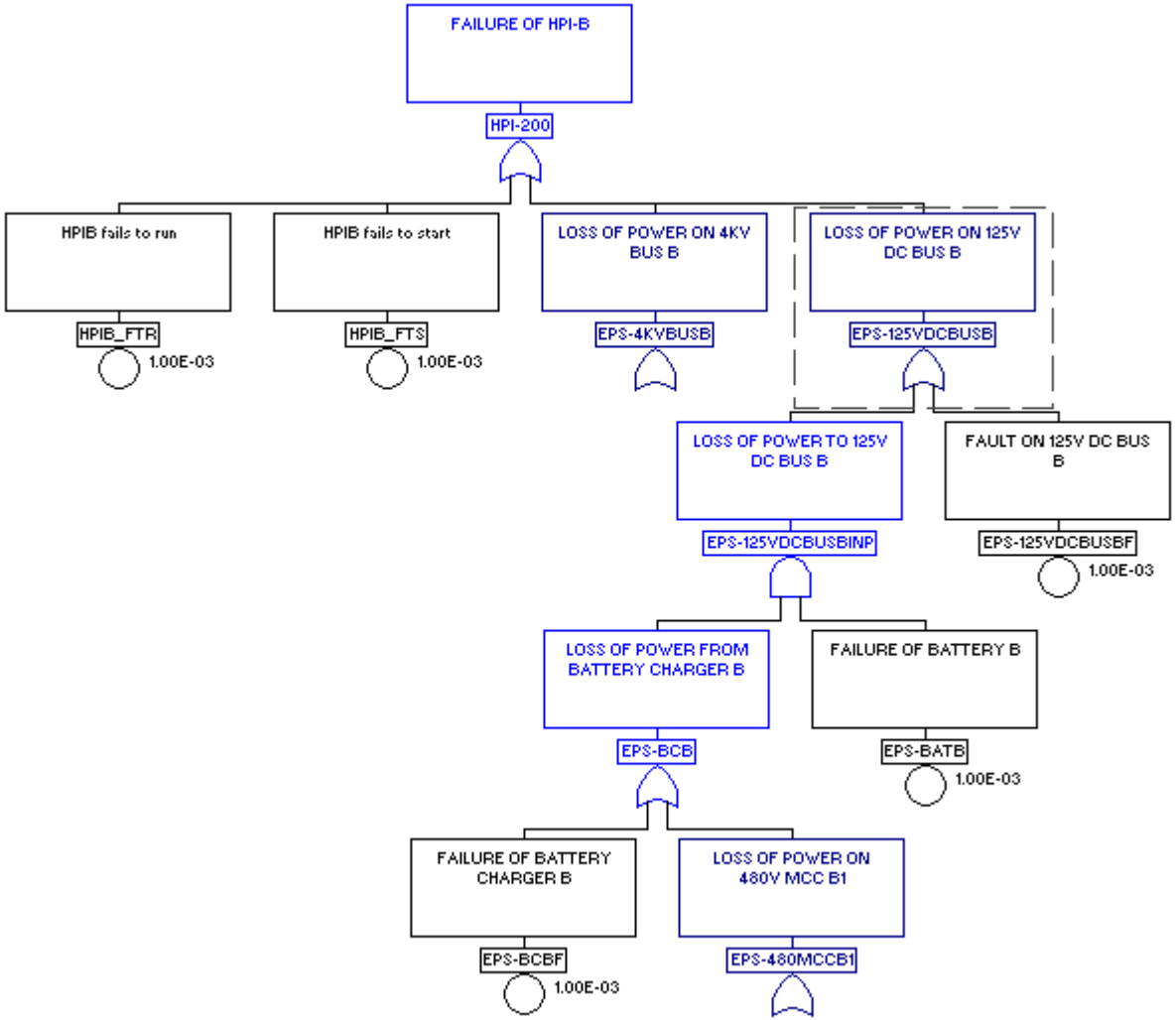

Figure 30: Gate HPI-200

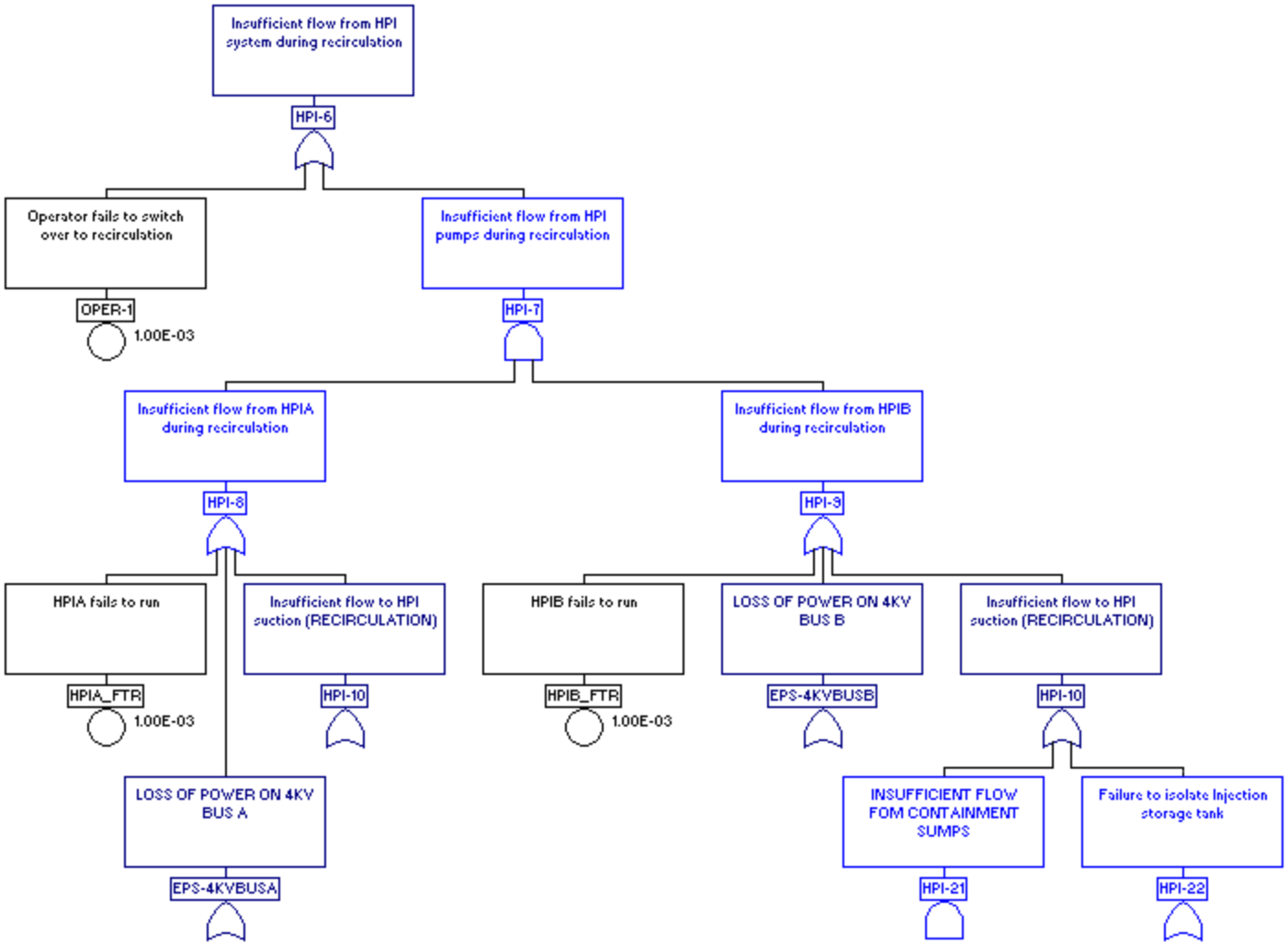

Figure 31: Gate HPI-6

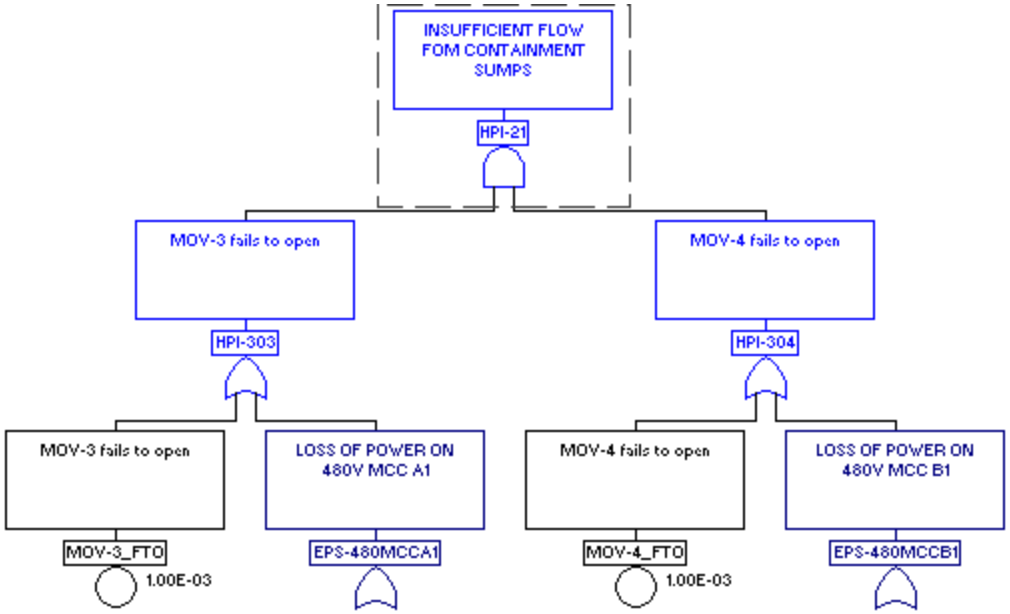

Figure 32: Gate HPI-21

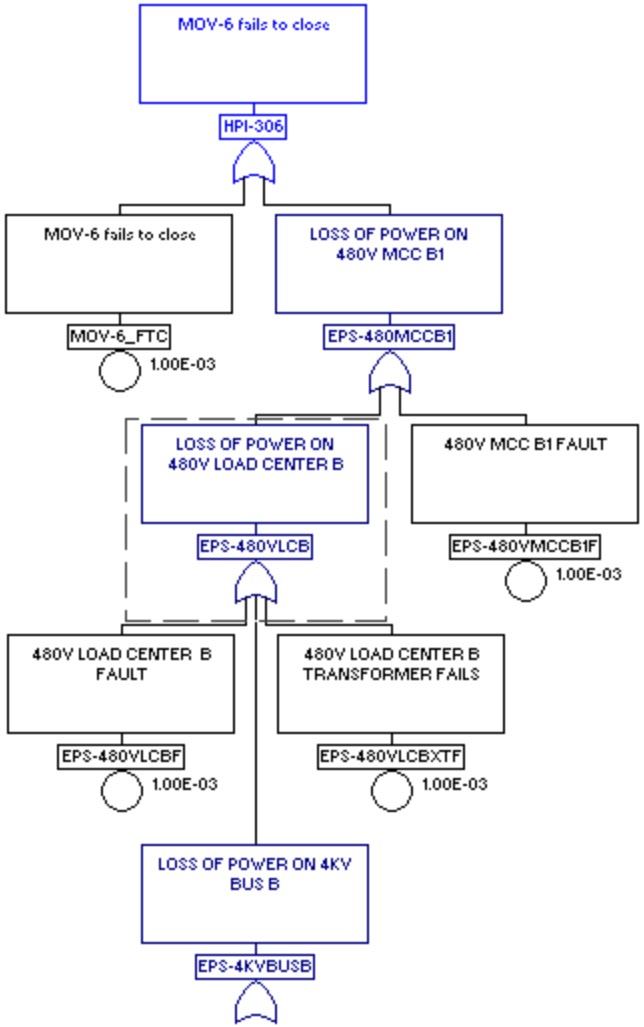

Figure 33: Gate HPI-306

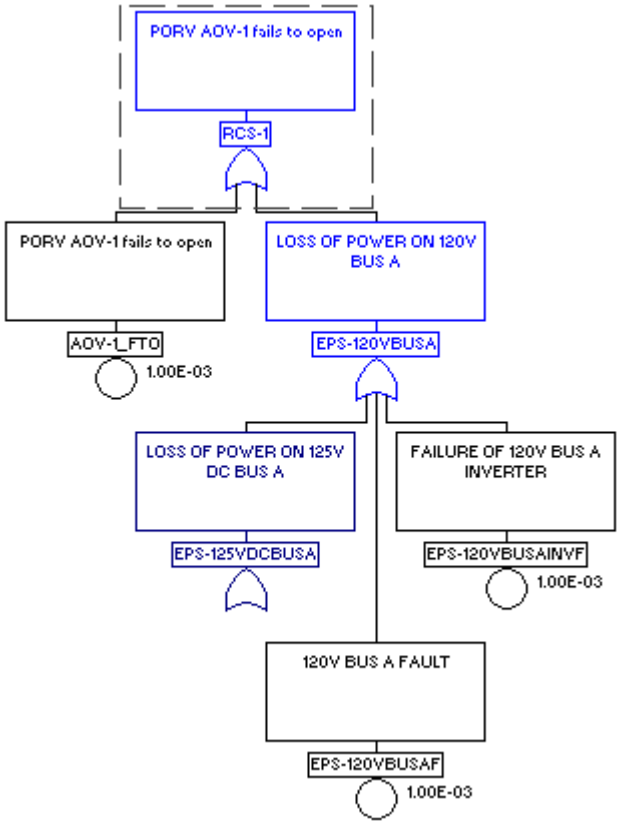

Figure 34: Gate RCS-1

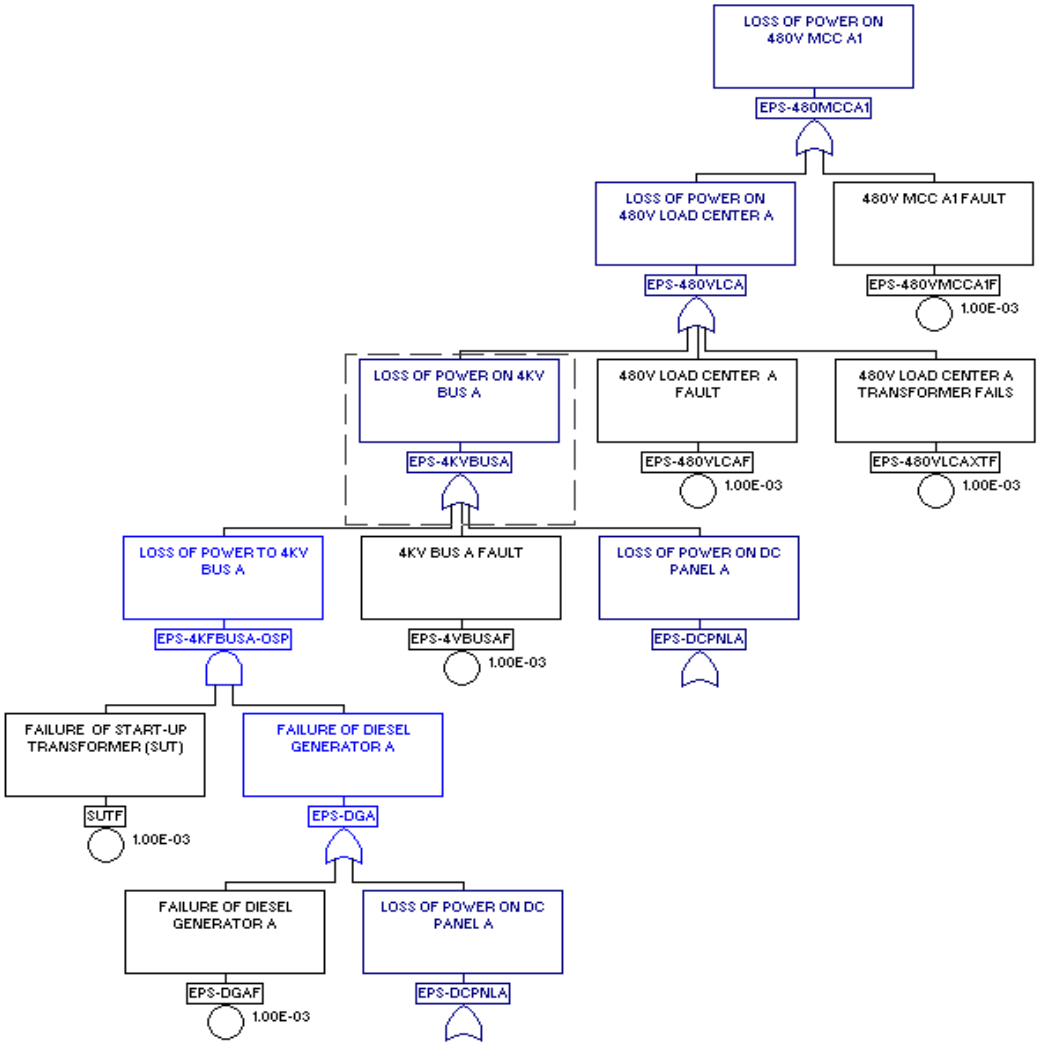

Figure 35: Gate EPS-480MCCA1

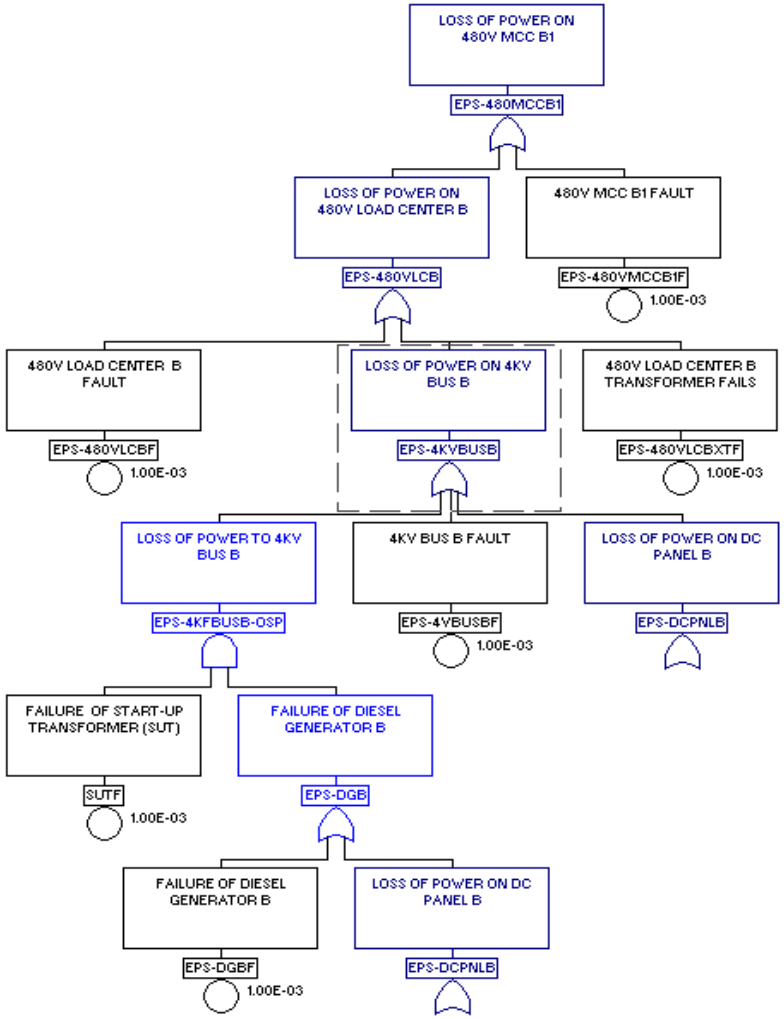

Figure 36: Gate EPS-480MCCB1

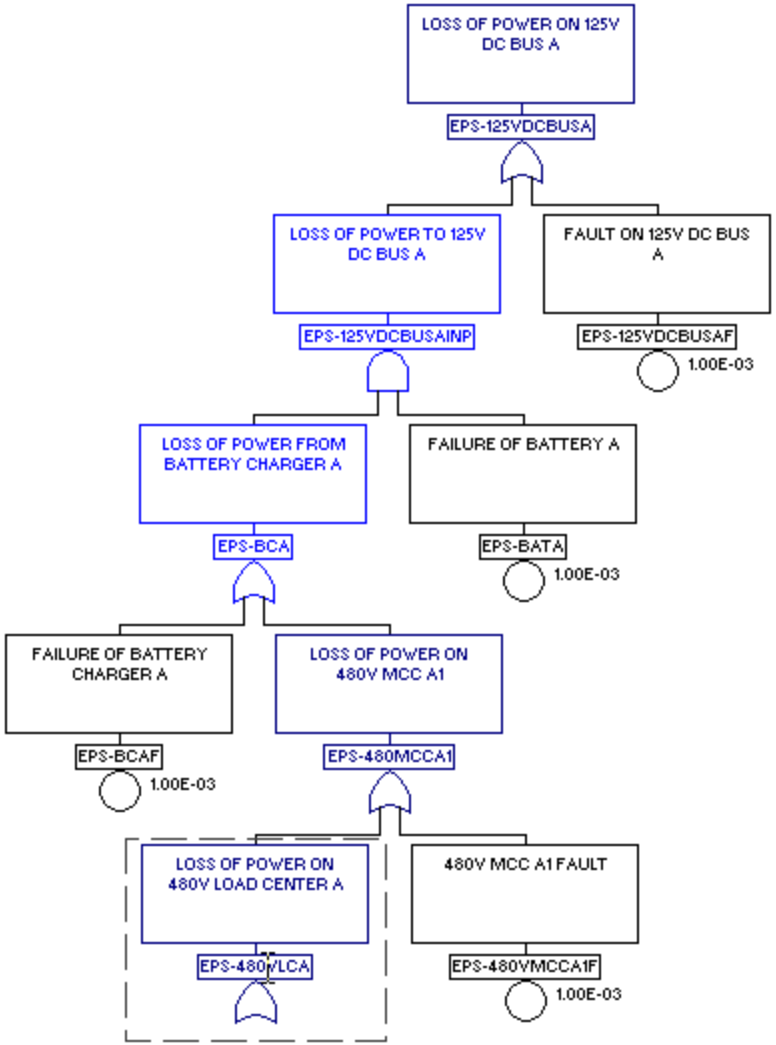

Figure 37: Gate EPS-125VDBUSA

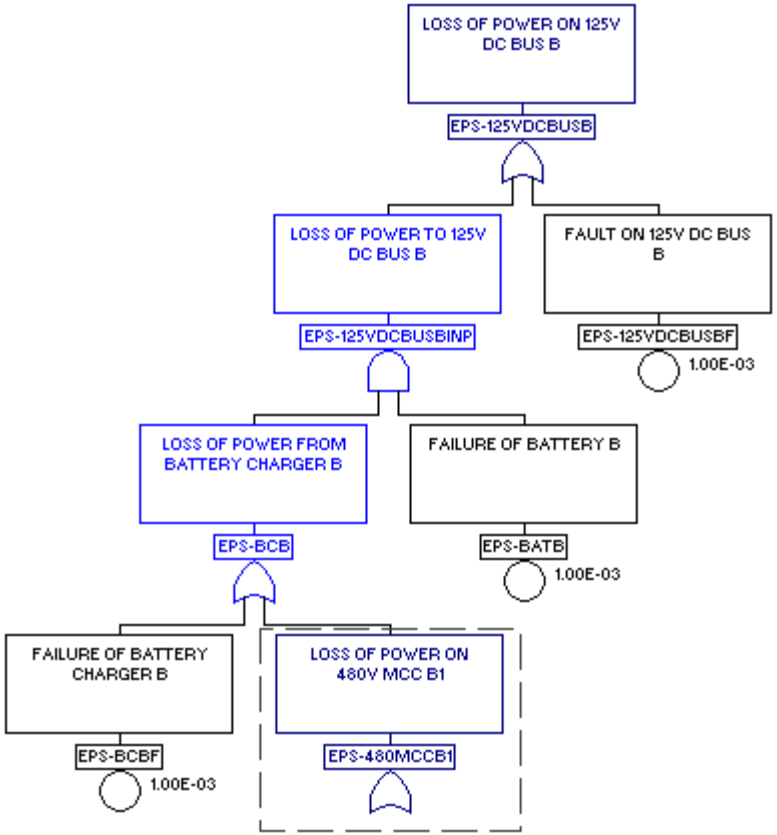

Figure 38: Gate EPS-125VDBUSB

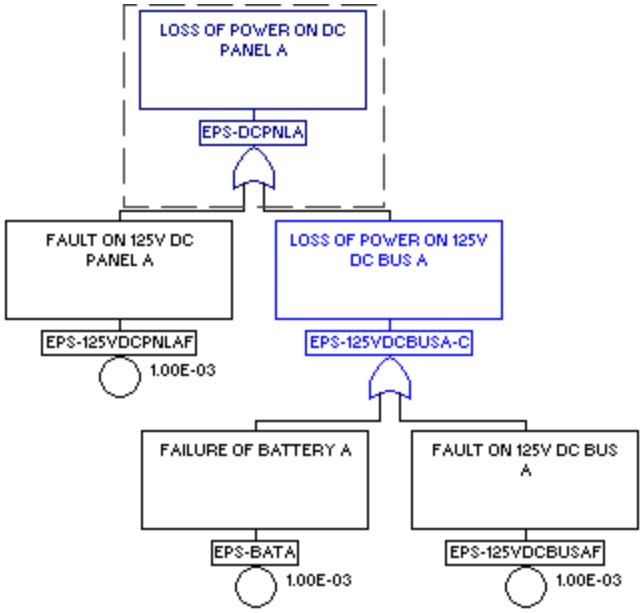

Figure 39: Gate EPS-DCPNLA

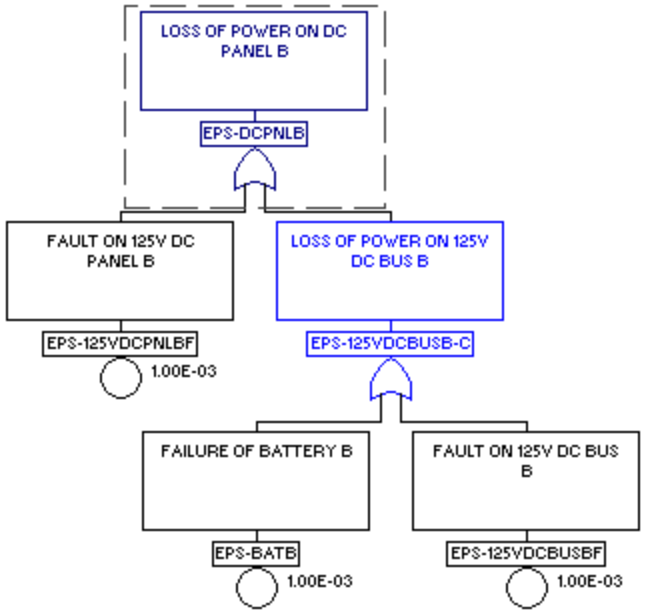

Figure 40: Gate EPS-DCPNLB