HITACHI

GE Hitachi Nuclear Energy

Richard E. Kingston
Vice President, ESBWR Licensing

PO Box 780 M/C A-55
Wilmington, NC 28402-0780
USA

T 910 819 6192
F 910 362 6192
rick.kingstion@ge.com

MFN 08-905

Docket No. 52-010

November 20, 2008

U.S. Nuclear Regulatory Commission
Document Control Desk
Washington, D.C. 20555-0001

Subject: **Submittal of Portion of Response to NRC Request for Additional Information (RAI) Letter 241 - Related to ESBWR Design Certification Application - Chapter 14.3 - RAI Number 14.3-412**

The purpose of this letter is to submit the response to Nuclear Regulatory Commission (NRC) Request Additional Information (RAI) number 14.3-412.

This response to RAI 14.3-412 is provided based on the request in NRC Letter 241 (Reference 1).

If you have any questions or require additional information, please contact me.

Sincerely,

Richard E. Kingston

Richard E. Kingston
Vice President, ESBWR Licensing

D068
NRO

Reference:

1. MFN 08-650 – Letter from Nuclear Regulatory Commission to Robert E. Brown (GEH) "*Request for Additional Information Letter No. 241 Related to ESBWR Design Certification Application*", dated August 15, 2008

Enclosure:

1. MFN 08-905 – Response to Portion of NRC Request for Additional Information Letter No. 241 Related to ESBWR Design Certification Application - DCD Tier 1 - RAI Number 14.3-412

cc:	AE Cubbage	USNRC (with enclosure)
	RE Brown	GEH/Wilmington (with enclosure)
	DH Hinds	GEH/Wilmington (with enclosure)
	RM Wachowiak	GEH/Wilmington (with enclosure)
	eDRF	0000-0093-7090

Enclosure 1

MFN 08-905

Response to Portion of NRC Request for Additional Information Letter No. 241 Related to ESBWR Design Certification Application DCD Tier 1

RAI Number 14.3-412

*** Verified DCD changes associated with this RAI response are identified in the enclosed DCD markups by enclosing the text within a black box. The marked-up pages may contain unverified changes in addition to the verified changes resulting from this RAI response. Other changes shown in the markup(s) may not be fully developed and approved for inclusion in DCD Revision 6.**

NRC RAI 14.3-412

Inconsistencies in figures

Explain why the figures in DCD Tier 1, Section 2.13 are not consistent with DCD Tier 2, Chapter 8 figures.

GEH Response

GEH has reviewed the inconsistencies in the Tier 1 and Tier 2 figures discussed during our October 16, 2008 and November 6, 2008 teleconferences with the NRC. We have revised the Tier 1 and Tier 2 figures and they are enclosed with this transmittal. The revisions are as follows:

Tier 1, figure 2.13.1-1, sheet 2, added bus numbers to the IPC (Isolation Power Center) alternate feed descriptions to agree with Tier 2 figures and revised configuration of IPC and ADG (Ancillary Diesel Generator) buses to reflect deletion of the safety-related Uninterruptible Power Supply System (UPS) regulating bypass transformers.

Tier 1, figure 2.13.3-2, sheet 1, added the word "typical" to the 250 vdc load descriptions.

Tier 1, figure 2.13.3-2, sheet 2, added the word "typical" to the 125 vdc load descriptions.

Tier 1, figure 2.13.5-1, added the word "typical" to 120 vac loads and bus numbers to 250 vdc buses, corrected 120 vac circuit breakers to fused disconnects to agree with Tier 2 figure and revised configuration of UPS to reflect deletion of the regulating bypass transformers.

Tier 1, figure 2.13.5-2, sheet 1, added the word "typical" to load groups A, B & C.

Tier 1, figure 2.13.5-2, sheet 2, added the word "typical loads" to 208/120 vac distribution panels loads.

Tier 2, figure 8.1-4 sheet 1 of 1, revised configuration of safety-related UPS to reflect deletion of the regulating bypass transformers.

Tier 2, figure 8.3-1, sheet 1 of 1, revised configuration of IPC buses to reflect deletion of the safety-related Uninterruptible Power Supply System (UPS) regulating bypass transformers.

Tier 2, figure 8.3-3, sheet 1 of 1, revised configuration of ADG (Ancillary Diesel Generator) buses to reflect deletion of the safety-related Uninterruptible Power Supply System (UPS) regulating bypass transformers.

DCD Impact

DCD Tier 1, Section 2.13, figures: 2.13.1-1, sheet 2, 2.13.3-2, sheet 1, 2.13.3-2 sheet 2, 2.13.5-1, 2.13.5-2, sheet 1 and 2.13.5-2, sheet 2 and Tier 2, Chapter 8, figures: 8.1-4, sheet 1 of 1, 8.3-1, sheet 1 of 1 and 8.3-3, sheet 1 of 1 will be revised as noted in the attached markup.

MFN 08-905

DCD Tier 1 and 2, Revision 6 Markups for

RAI 14.3-412

DCD Tier 1, Section 2.13, figures:
2.13.1-1, sheet 2,
2.13.3-2, sheet 1,
2.13.3-2, sheet 2,
2.13.5-1,
2.13.5-2, sheet 1,
and
2.13.5-2, sheet 2

and

Tier 2, Chapter 8, figures:
8.1-4, sheet 1 of 1,
8.3-1, sheet 1 of 1,
and
8.3-3, sheet 1 of 1

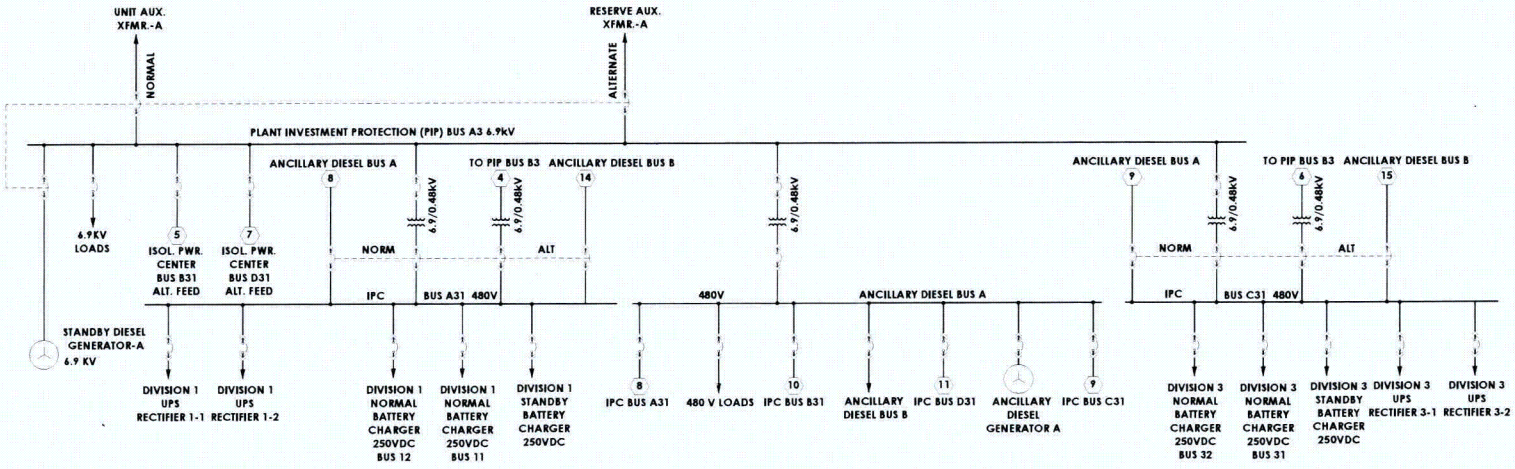
UNIT AUX. XFMR.-A
NORMAL
RESERVE AUX. XFMR.-A
ALTERNATE
PLANT INVESTMENT PROTECTION (PIP) BUS A3 6.9kV
ANCILLARY DIESEL BUS A
TO PIP BUS B3
ANCILLARY DIESEL BUS B
6.9/0.48kV
6.9KV LOADS
ISOL. PWR. CENTER BUS B31 ALT. FEED
ISOL. PWR. CENTER BUS D31 ALT. FEED
NORM
ALT
IPC
BUS A31 480V
480V
ANCILLARY DIESEL BUS A
BUS C31 480V
STANDBY DIESEL GENERATOR-A 6.9 KV
DIVISION 1 UPS RECTIFIER 1-1
DIVISION 1 UPS RECTIFIER 1-2
DIVISION 1 NORMAL BATTERY CHARGER 250VDC BUS 12
DIVISION 1 NORMAL BATTERY CHARGER 250VDC BUS 11
DIVISION 1 STANDBY BATTERY CHARGER 250VDC
IPC BUS A31
480 V LOADS
IPC BUS B31
ANCILLARY DIESEL BUS B
IPC BUS D31
ANCILLARY DIESEL GENERATOR A
IPC BUS C31
DIVISION 3 NORMAL BATTERY CHARGER 250VDC BUS 32
DIVISION 3 NORMAL BATTERY CHARGER 250VDC BUS 31
DIVISION 3 STANDBY BATTERY CHARGER 250VDC
DIVISION 3 UPS RECTIFIER 3-1
DIVISION 3 UPS RECTIFIER 3-2

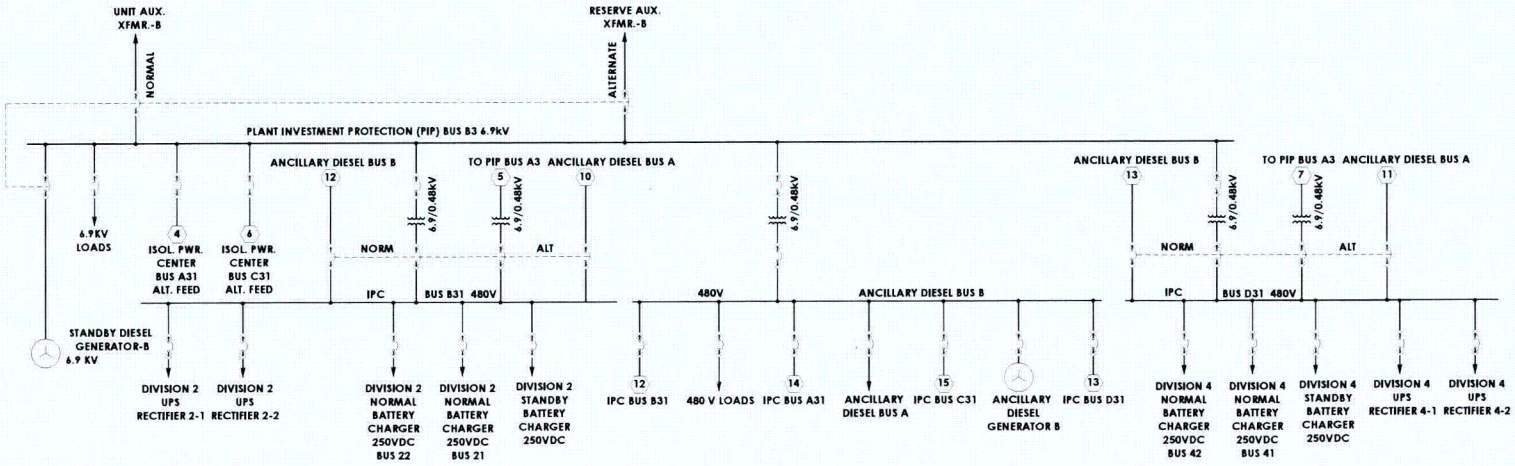
UNIT AUX. XFMR.-B
NORMAL
RESERVE AUX. XFMR.-B
ALTERNATE
PLANT INVESTMENT PROTECTION (PIP) BUS B3 6.9kV
ANCILLARY DIESEL BUS B
TO PIP BUS A3
ANCILLARY DIESEL BUS A
6.9/0.48kV
6.9KV LOADS
ISOL. PWR. CENTER BUS A31 ALT. FEED
ISOL. PWR. CENTER BUS C31 ALT. FEED
NORM
ALT
IPC
BUS B31 480V
480V
ANCILLARY DIESEL BUS B
BUS D31 480V
STANDBY DIESEL GENERATOR-B 6.9 KV
DIVISION 2 UPS RECTIFIER 2-1
DIVISION 2 UPS RECTIFIER 2-2
DIVISION 2 NORMAL BATTERY CHARGER 250VDC BUS 22
DIVISION 2 NORMAL BATTERY CHARGER 250VDC BUS 21
DIVISION 2 STANDBY BATTERY CHARGER 250VDC
IPC BUS B31
480 V LOADS
IPC BUS A31
ANCILLARY DIESEL BUS A
IPC BUS C31
ANCILLARY DIESEL GENERATOR B
IPC BUS D31
DIVISION 4 NORMAL BATTERY CHARGER 250VDC BUS 42
DIVISION 4 NORMAL BATTERY CHARGER 250VDC BUS 41
DIVISION 4 STANDBY BATTERY CHARGER 250VDC
DIVISION 4 UPS RECTIFIER 4-1
DIVISION 4 UPS RECTIFIER 4-2

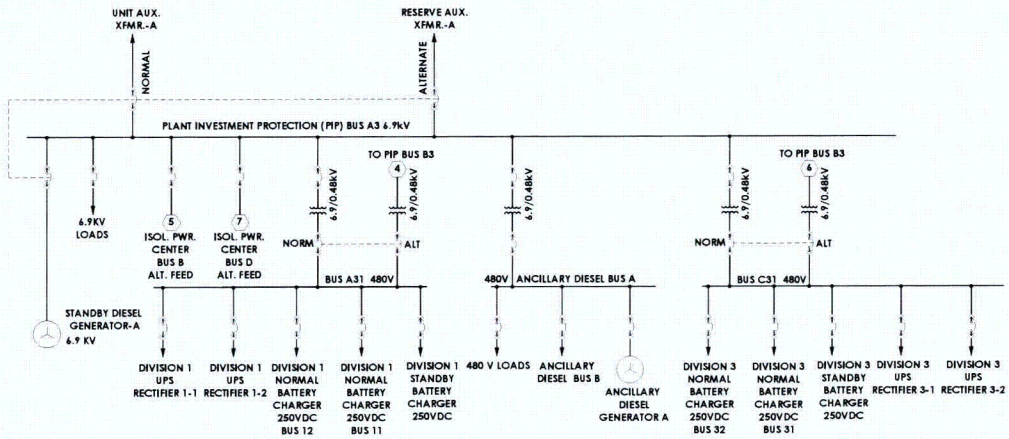

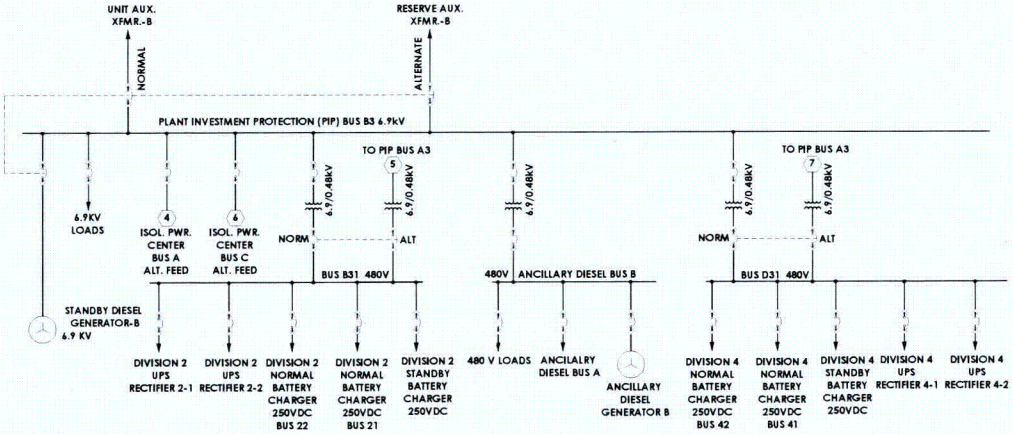

Figure 2.13.1-1 Sh 2.
Onsite AC Power System Functional Arrangement

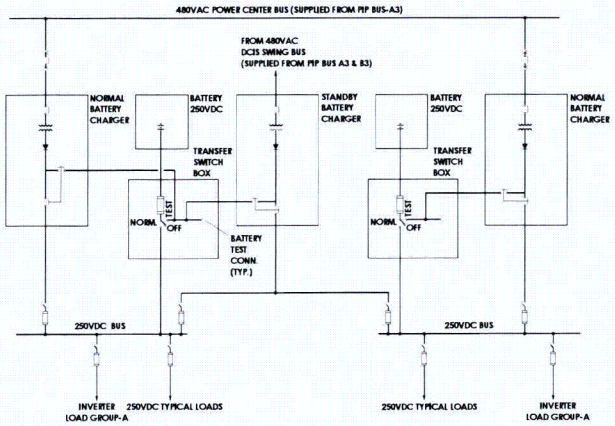

NONSAFETY-RELATED 250VDC POWER SYSTEM

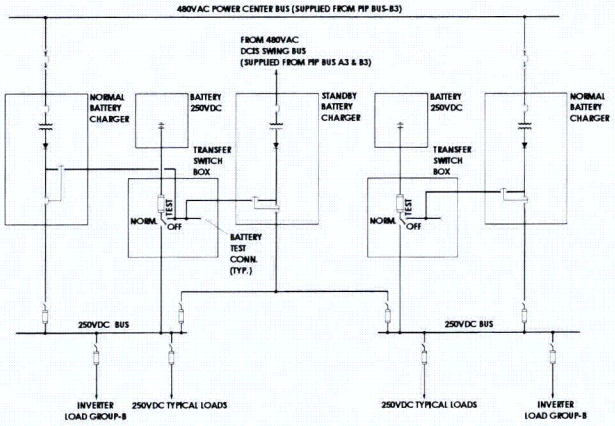

NONSAFETY-RELATED 250VDC POWER SYSTEM

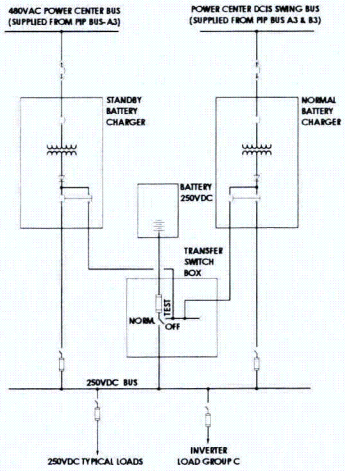

NONSAFETY-RELATED 250VDC POWER SYSTEM

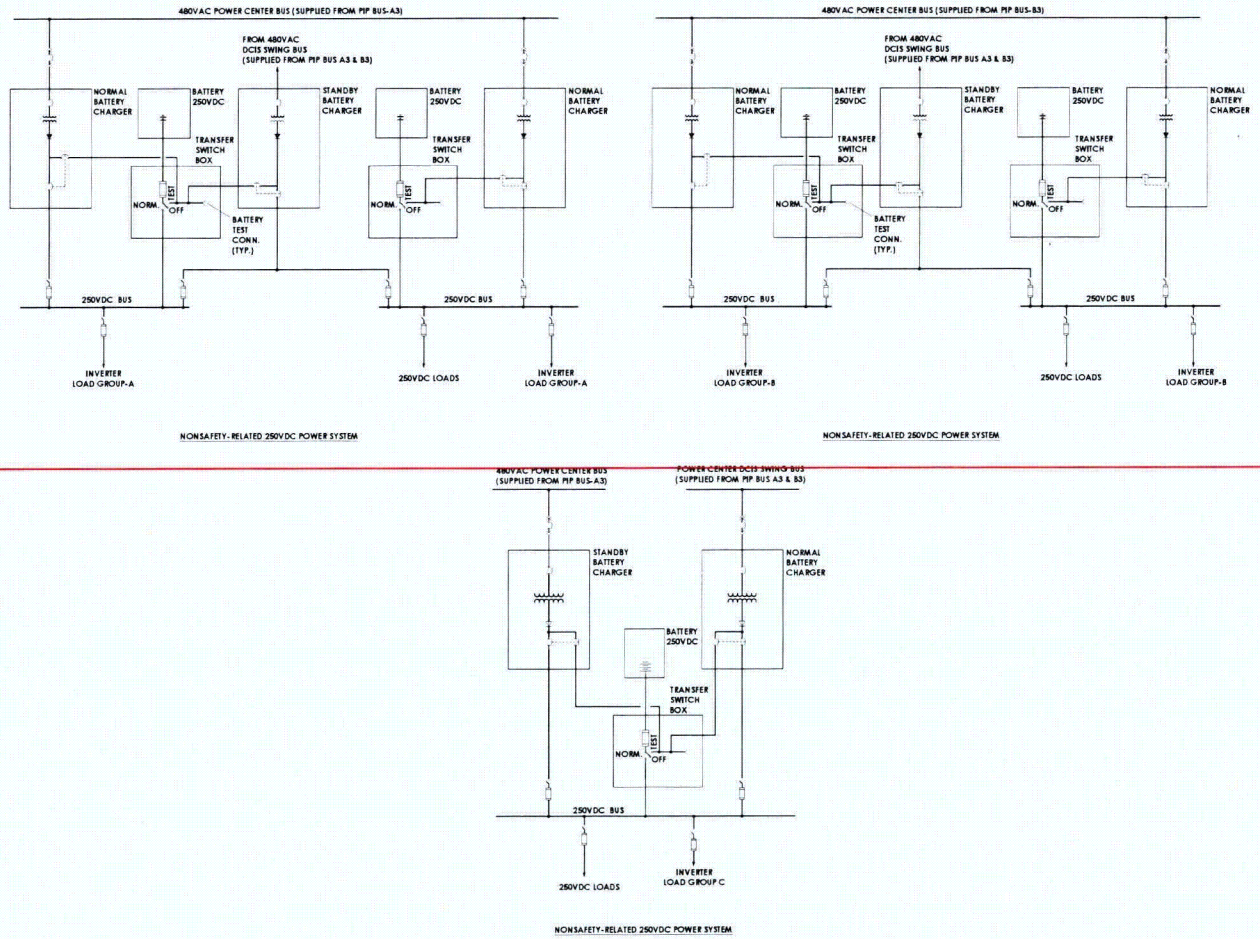

Figure 2.13.3-2 Sh 1.
Nonsafety-Related 250 VDC System Functional Arrangement

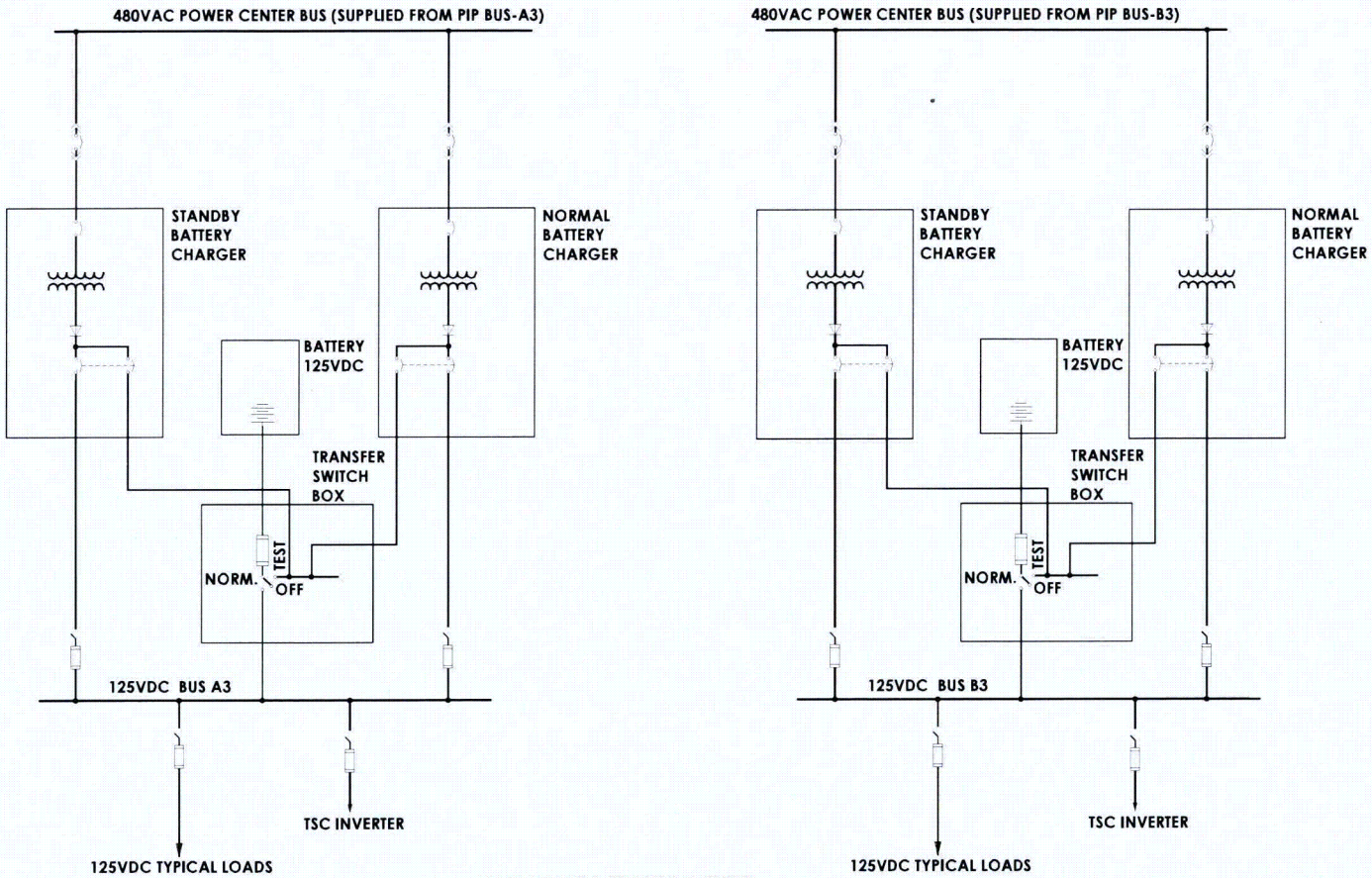

NONSAFETY-RELATED 125VDC SYSTEM

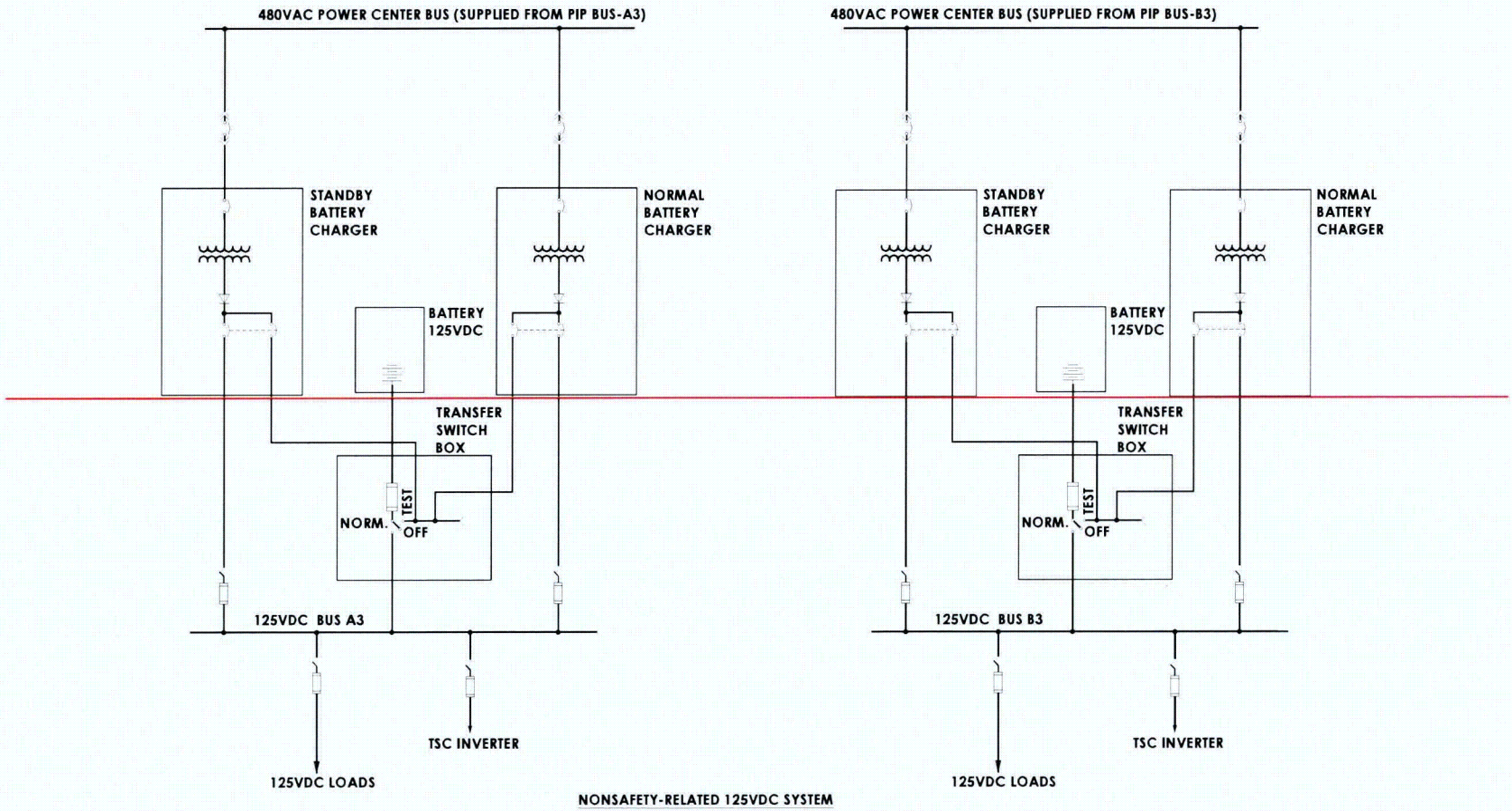

Figure 2.13.3-2 Sh 2.
Nonsafety-Related 125 VDC System Functional Arrangement

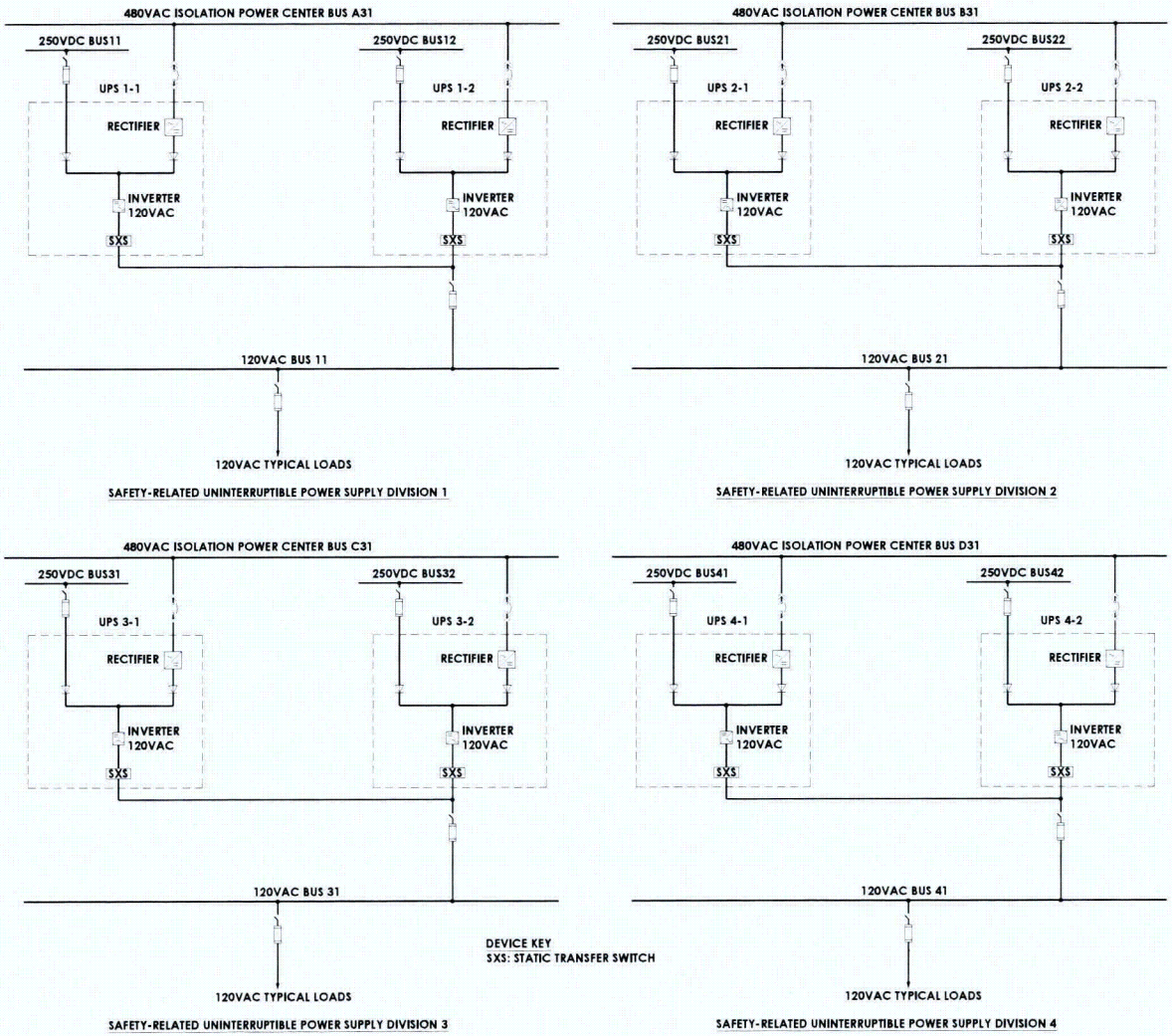
480VAC ISOLATION POWER CENTER BUS A31
250VDC BUS11
250VDC BUS12
UPS 1-1
UPS 1-2
RECTIFIER
INVERTER 120VAC
SXS
120VAC BUS 11
120VAC TYPICAL LOADS
SAFETY-RELATED UNINTERRUPTIBLE POWER SUPPLY DIVISION 1
480VAC ISOLATION POWER CENTER BUS B31
250VDC BUS21
250VDC BUS22
UPS 2-1
UPS 2-2
120VAC BUS 21
SAFETY-RELATED UNINTERRUPTIBLE POWER SUPPLY DIVISION 2
480VAC ISOLATION POWER CENTER BUS C31
250VDC BUS31
250VDC BUS32
UPS 3-1
UPS 3-2
120VAC BUS 31
SAFETY-RELATED UNINTERRUPTIBLE POWER SUPPLY DIVISION 3
480VAC ISOLATION POWER CENTER BUS D31
250VDC BUS41
250VDC BUS42
UPS 4-1
UPS 4-2
120VAC BUS 41
SAFETY-RELATED UNINTERRUPTIBLE POWER SUPPLY DIVISION 4
DEVICE KEY
SXS: STATIC TRANSFER SWITCH

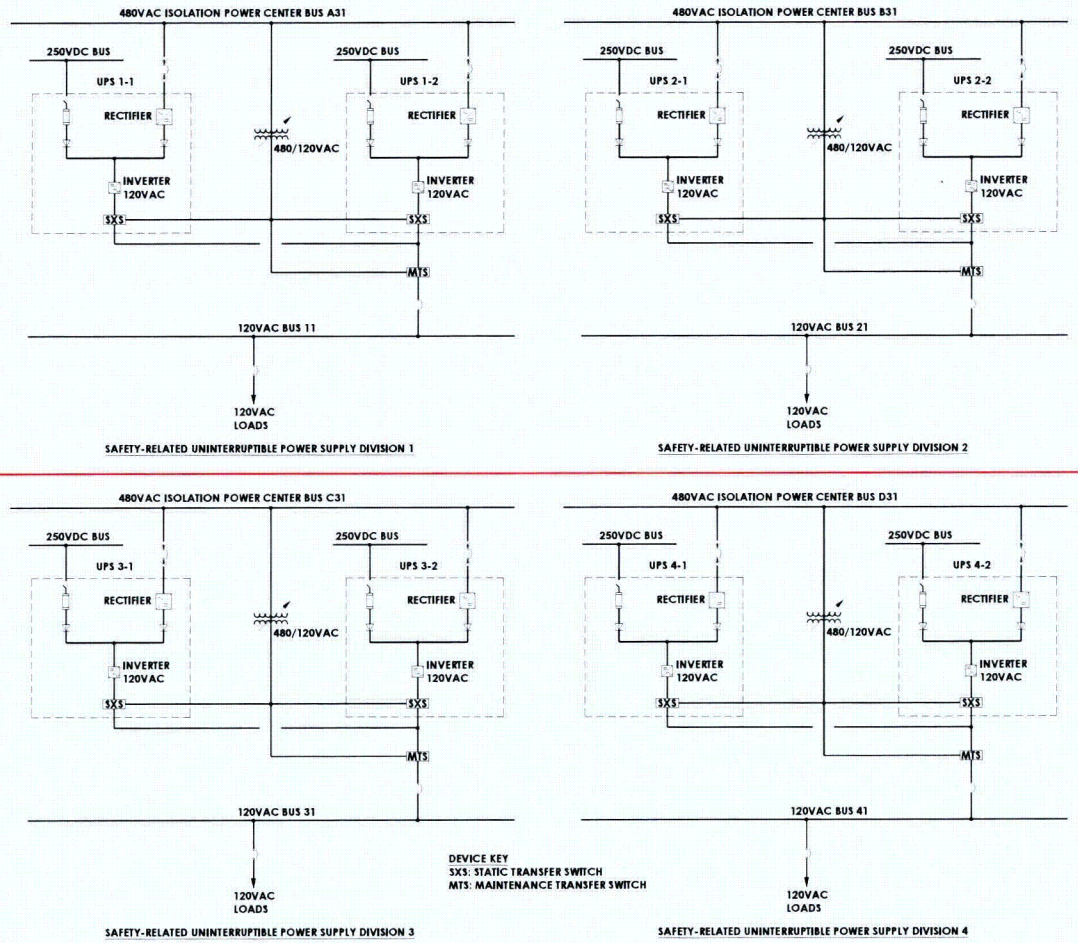

Figure 2.13.5-1.
Safety-Related UPS System Functional Arrangement

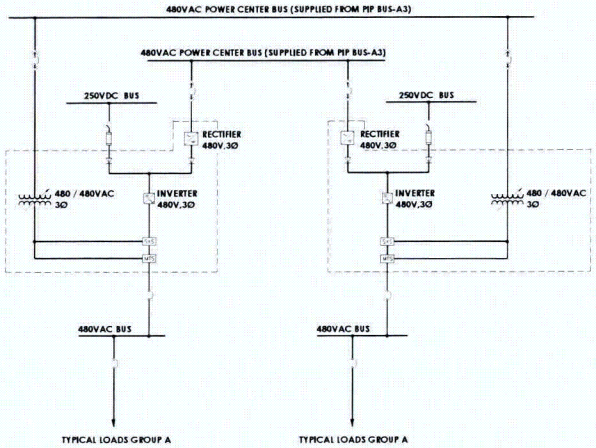

NONSAFETY-RELATED UNINTERRUPTIBLE POWER SUPPLY LOAD GROUP A

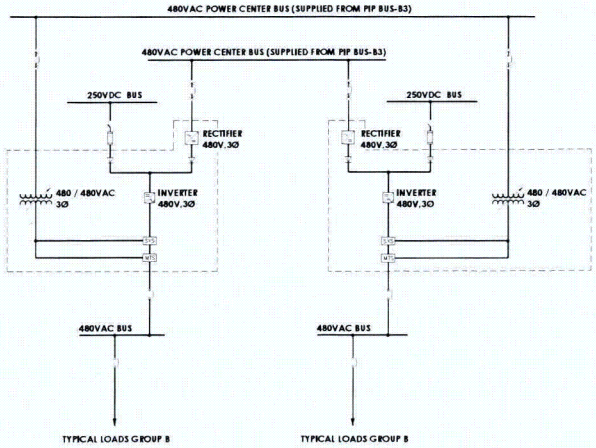

NONSAFETY-RELATED UNINTERRUPTIBLE POWER SUPPLY LOAD GROUP B

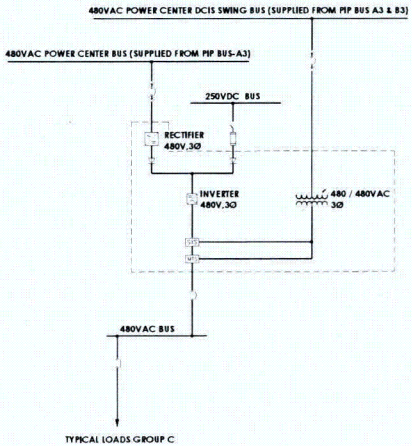

NONSAFETY-RELATED UNINTERRUPTIBLE POWER SUPPLY LOAD GROUP C

DEVICE KEY
SXS: STATIC TRANSFER SWITCH
MTS: MAINTENANCE TRANSFER SWITCH

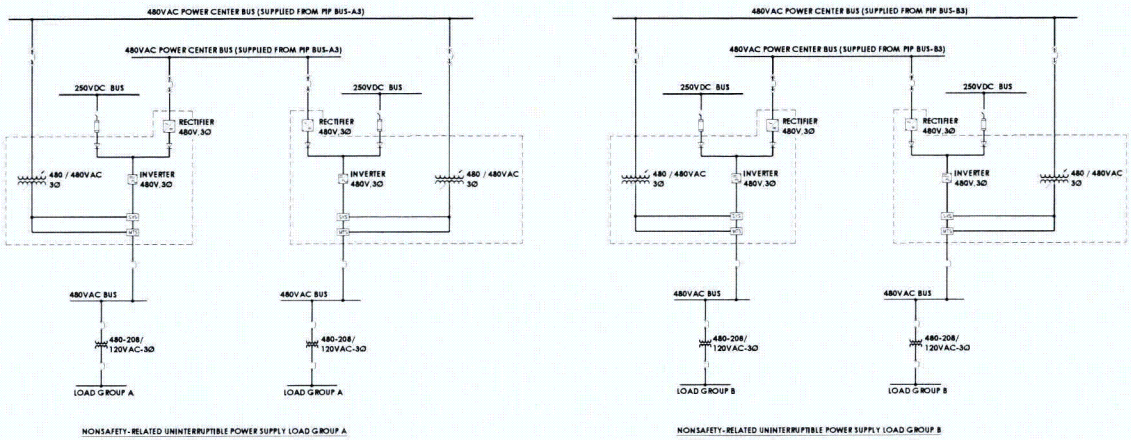

Figure 2.13.5-2. Sh 1
Nonsafety-Related UPS System Functional Arrangement

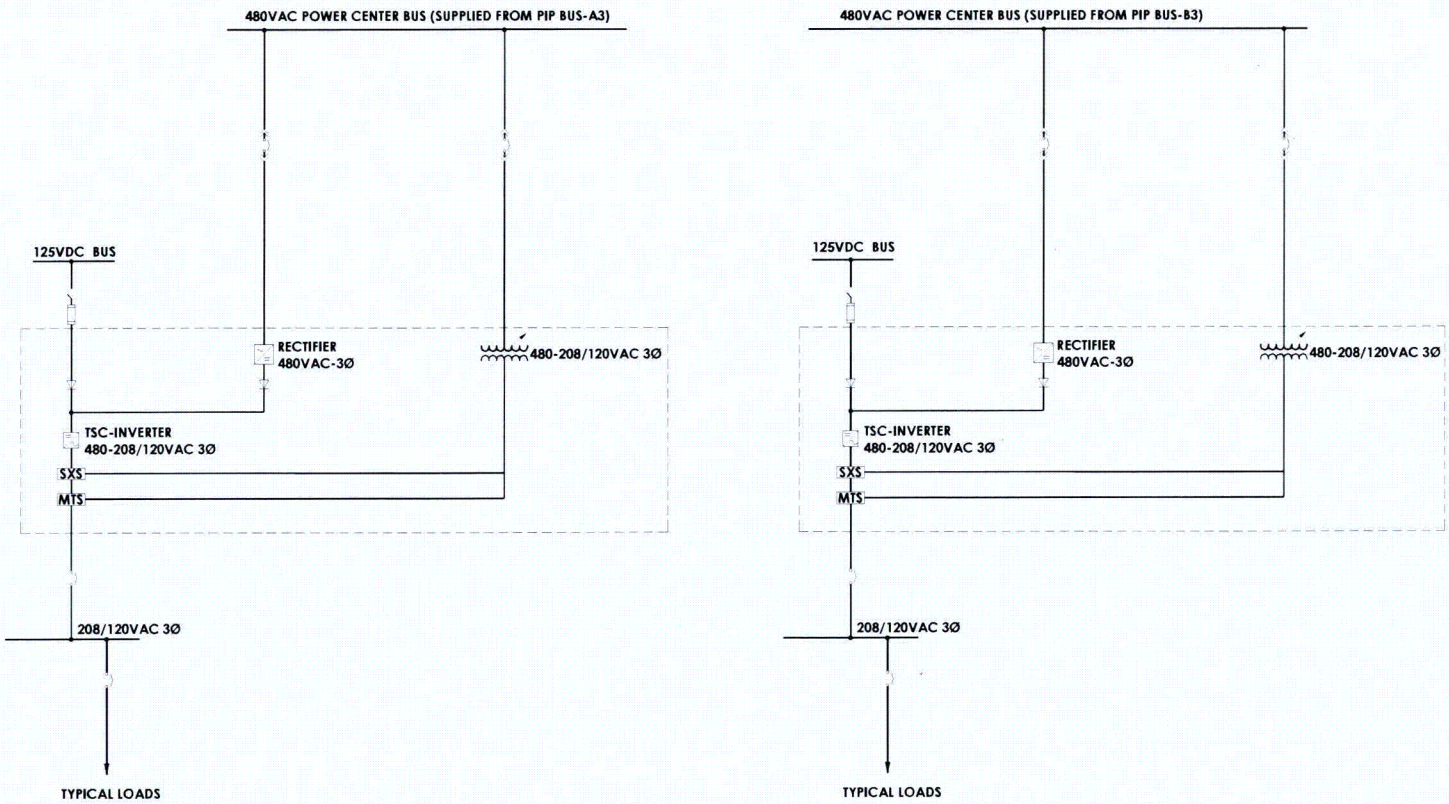

NONSAFETY-RELATED UNINTERRUPTIBLE TSC SYSTEM

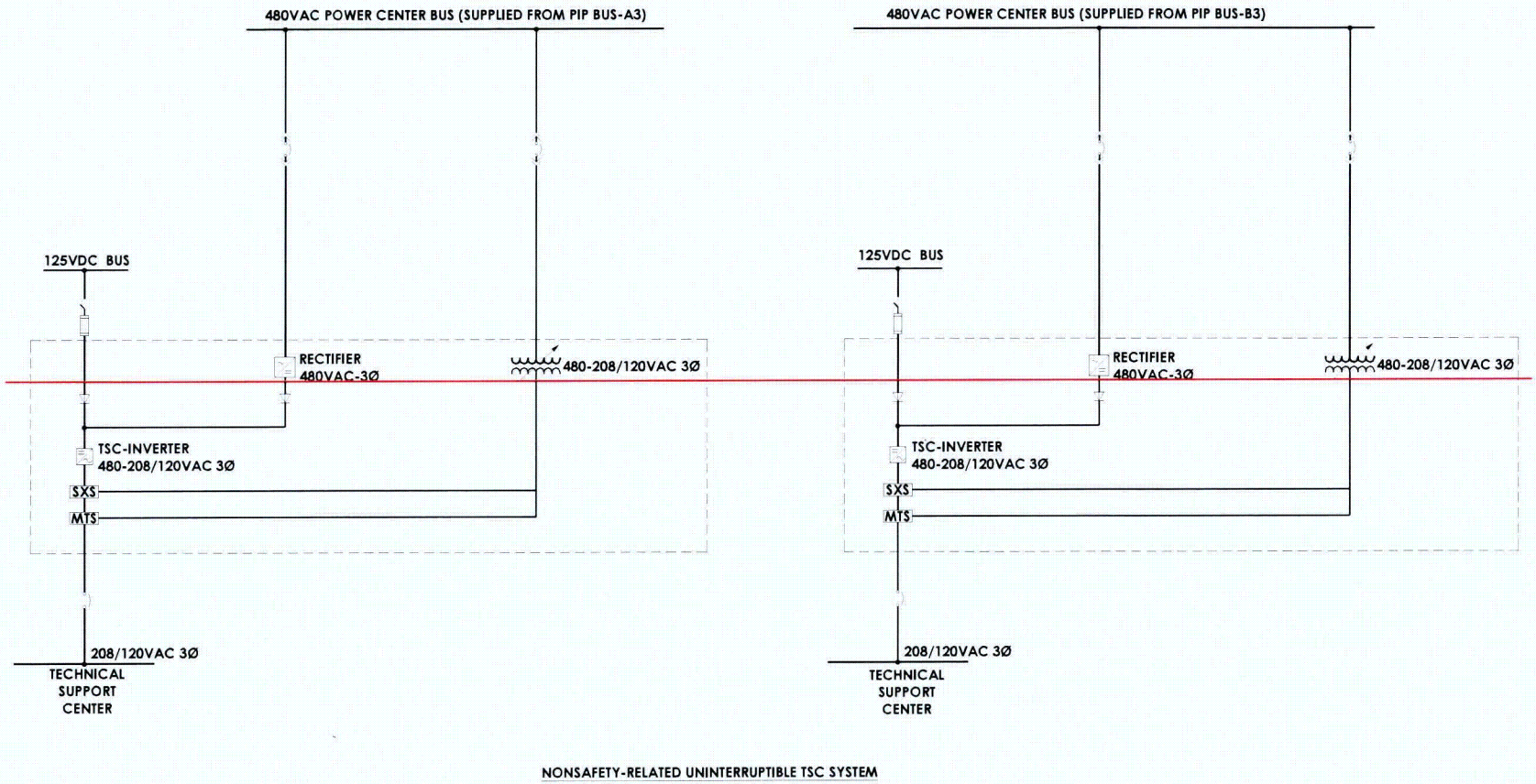

Figure 2.13.5-2 Sh 2
Nonsafety-Related UPS System Functional Arrangement

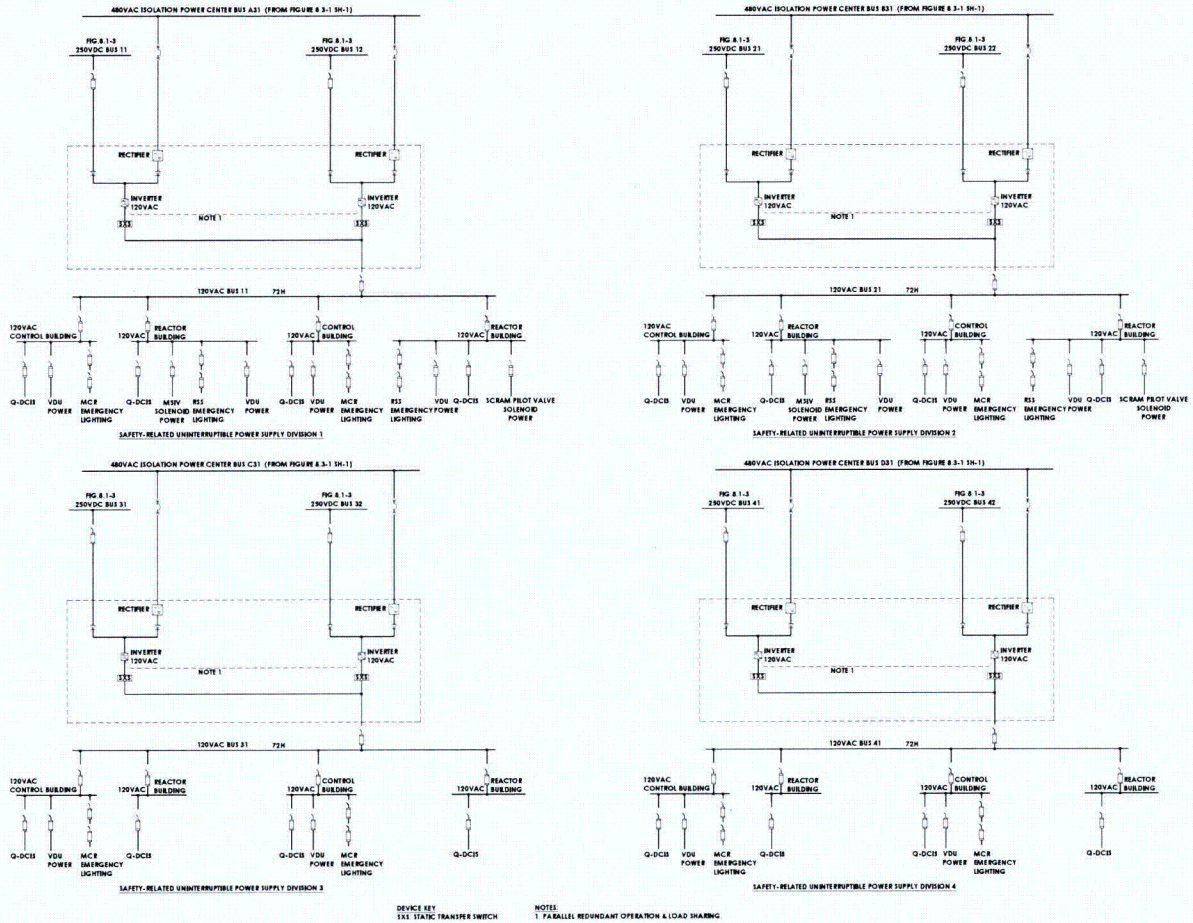
480VAC ISOLATION POWER CENTER BUS A31 (FROM FIGURE 8.3-1 SH-1)
FIG 8.1-3 250VDC BUS 11
FIG 8.1-3 250VDC BUS 12
RECTIFIER
INVERTER 120VAC
NOTE 1
TXS
120VAC BUS 11 72H
120VAC CONTROL BUILDING
120VAC REACTOR BUILDING
120VAC CONTROL BUILDING
120VAC REACTOR BUILDING
Q-DCIS
VDU POWER
MCR EMERGENCY LIGHTING
Q-DCIS
MSIV SOLENOID POWER
RSS EMERGENCY LIGHTING
VDU POWER
Q-DCIS
VDU POWER
MCR EMERGENCY LIGHTING
RSS EMERGENCY LIGHTING
VDU POWER
Q-DCIS
SCRAM PILOT VALVE SOLENOID POWER
SAFETY-RELATED UNINTERRUPTIBLE POWER SUPPLY DIVISION 1
480VAC ISOLATION POWER CENTER BUS B31 (FROM FIGURE 8.3-1 SH-1)
FIG 8.1-3 250VDC BUS 21
FIG 8.1-3 250VDC BUS 22
RECTIFIER
INVERTER 120VAC
NOTE 1
TXS
120VAC BUS 21 72H
120VAC CONTROL BUILDING
120VAC REACTOR BUILDING
120VAC CONTROL BUILDING
120VAC REACTOR BUILDING
Q-DCIS
VDU POWER
MCR EMERGENCY LIGHTING
Q-DCIS
MSIV SOLENOID POWER
RSS EMERGENCY LIGHTING
VDU POWER
Q-DCIS
VDU POWER
MCR EMERGENCY LIGHTING
RSS EMERGENCY LIGHTING
VDU POWER
Q-DCIS
SCRAM PILOT VALVE SOLENOID POWER
SAFETY-RELATED UNINTERRUPTIBLE POWER SUPPLY DIVISION 2
480VAC ISOLATION POWER CENTER BUS C31 (FROM FIGURE 8.3-1 SH-1)
FIG 8.1-3 250VDC BUS 31
FIG 8.1-3 250VDC BUS 32
RECTIFIER
INVERTER 120VAC
NOTE 1
TXS
120VAC BUS 31 72H
120VAC CONTROL BUILDING
120VAC REACTOR BUILDING
120VAC CONTROL BUILDING
120VAC REACTOR BUILDING
Q-DCIS
VDU POWER
MCR EMERGENCY LIGHTING
Q-DCIS
Q-DCIS
VDU POWER
MCR EMERGENCY LIGHTING
Q-DCIS
SAFETY-RELATED UNINTERRUPTIBLE POWER SUPPLY DIVISION 3
480VAC ISOLATION POWER CENTER BUS D31 (FROM FIGURE 8.3-1 SH-1)
FIG 8.1-3 250VDC BUS 41
FIG 8.1-3 250VDC BUS 42
RECTIFIER
INVERTER 120VAC
NOTE 1
TXS
120VAC BUS 41 72H
120VAC CONTROL BUILDING
120VAC REACTOR BUILDING
120VAC CONTROL BUILDING
120VAC REACTOR BUILDING
Q-DCIS
VDU POWER
MCR EMERGENCY LIGHTING
Q-DCIS
Q-DCIS
VDU POWER
MCR EMERGENCY LIGHTING
Q-DCIS
SAFETY-RELATED UNINTERRUPTIBLE POWER SUPPLY DIVISION 4
DEVICE KEY
TXS STATIC TRANSFER SWITCH
NOTES:
1. PARALLEL REDUNDANT OPERATION & LOAD SHARING

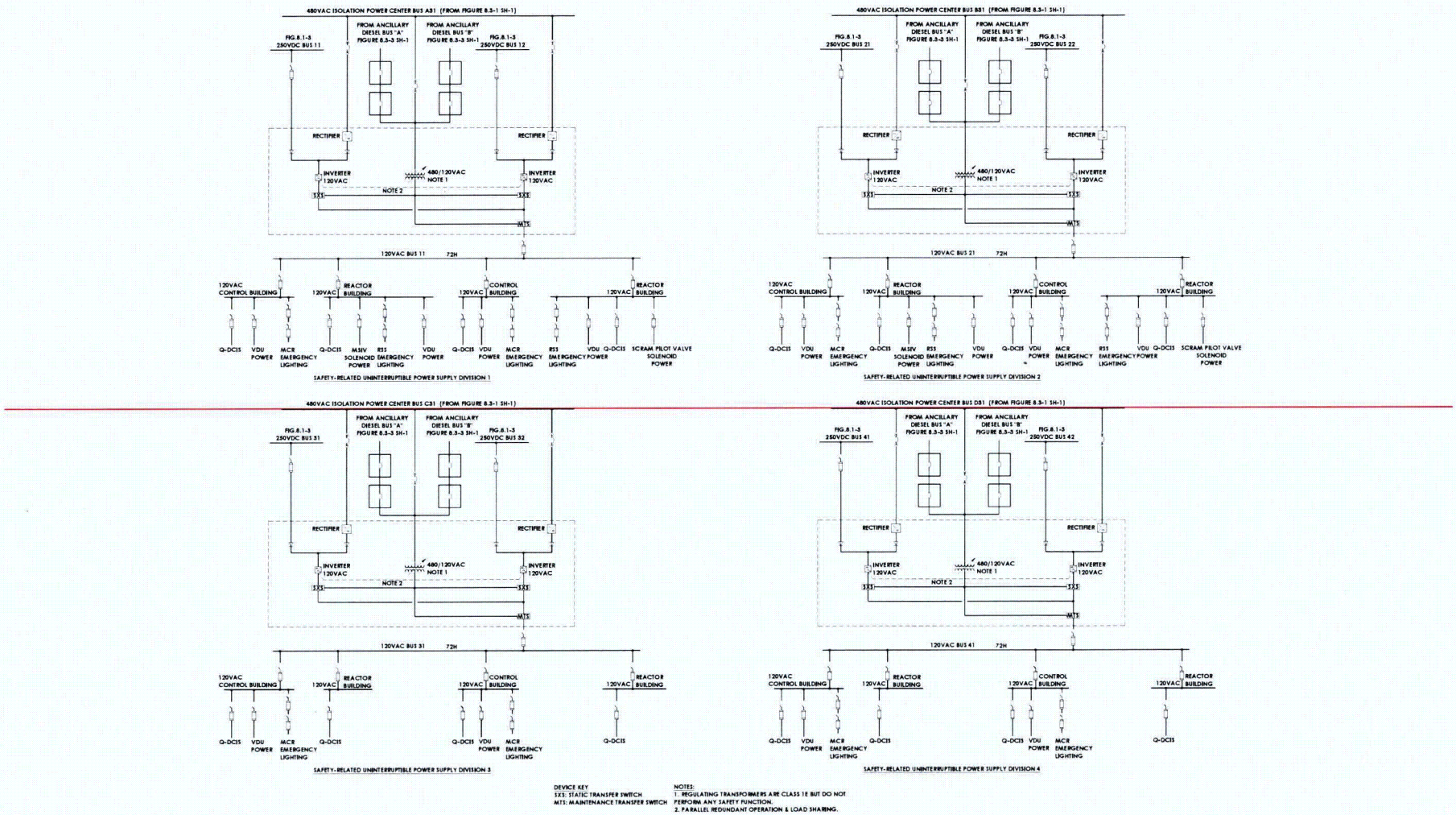

Figure 8.1-4. Uninterruptible AC Power Supply (Safety-Related)

Sh 1 of 1

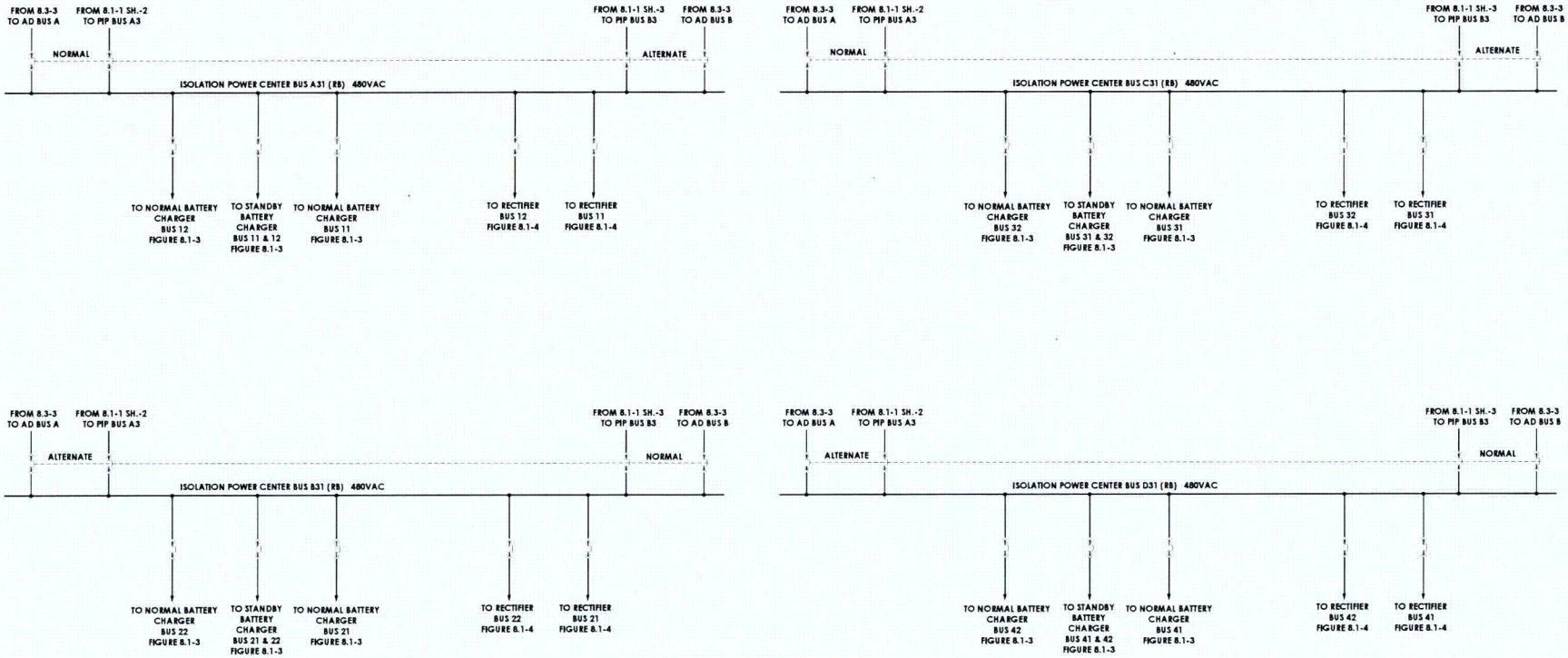

SAFETY-RELATED 480 VOLT ISOLATION POWER CENTERS

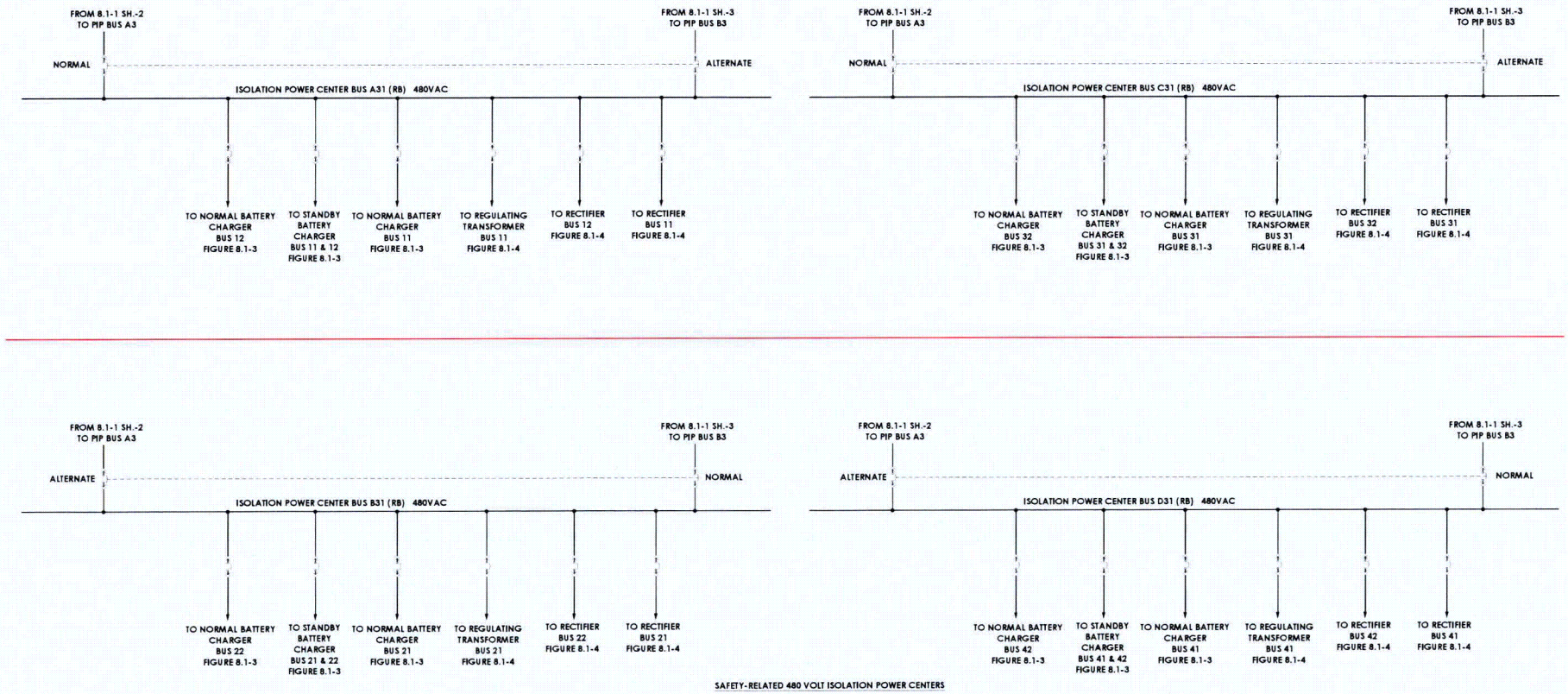

Figure 8.3-1. Safety-Related 480 Volt Power Centers

Sh 1 of 1

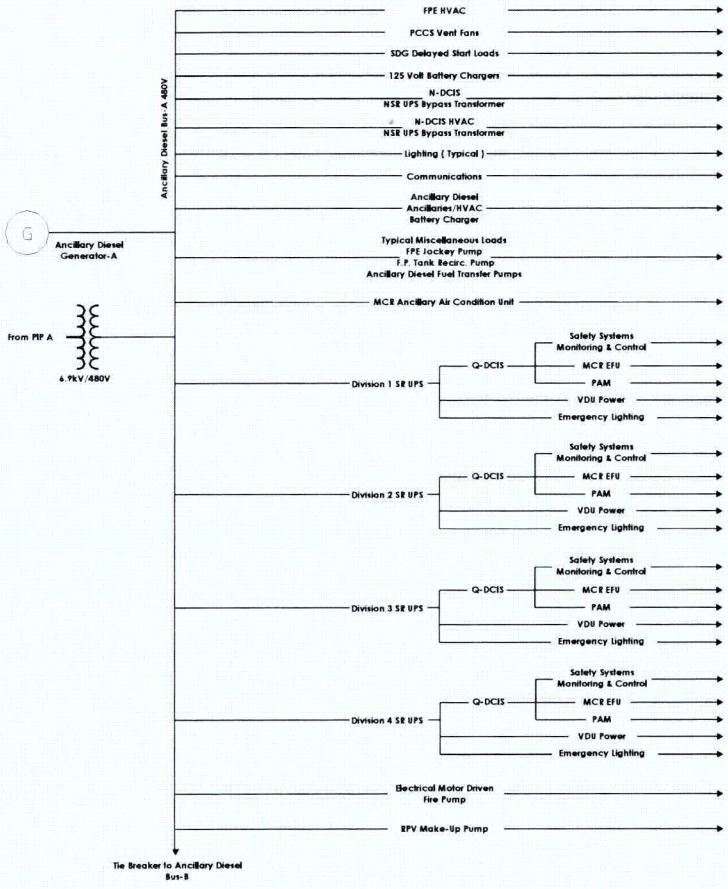
Ancillary Diesel Bus-A 480V
FPE HVAC
PCCS Vent Fans
SDG Delayed Start Loads
125 Volt Battery Chargers
N-DCIS
NSR UPS Bypass Transformer
N-DCIS HVAC
NSR UPS Bypass Transformer
Lighting (Typical)
Communications
Ancillary Diesel
Ancillaries/HVAC
Battery Charger
Typical Miscellaneous Loads
FPE Jockey Pump
F.P. Tank Recirc. Pump
Ancillary Diesel Fuel Transfer Pumps
MCR Ancillary Air Condition Unit
G
Ancillary Diesel
Generator-A
From PIP A
6.9kV/480V
Division 1 SR UPS
Q-DCIS
Safety Systems
Monitoring & Control
MCR EFU
PAM
VDU Power
Emergency Lighting
Division 2 SR UPS
Q-DCIS
Safety Systems
Monitoring & Control
MCR EFU
PAM
VDU Power
Emergency Lighting
Division 3 SR UPS
Q-DCIS
Safety Systems
Monitoring & Control
MCR EFU
PAM
VDU Power
Emergency Lighting
Division 4 SR UPS
Q-DCIS
Safety Systems
Monitoring & Control
MCR EFU
PAM
VDU Power
Emergency Lighting
Electrical Motor Driven
Fire Pump
RPV Make-Up Pump
Tie Breaker to Ancillary Diesel
Bus-B

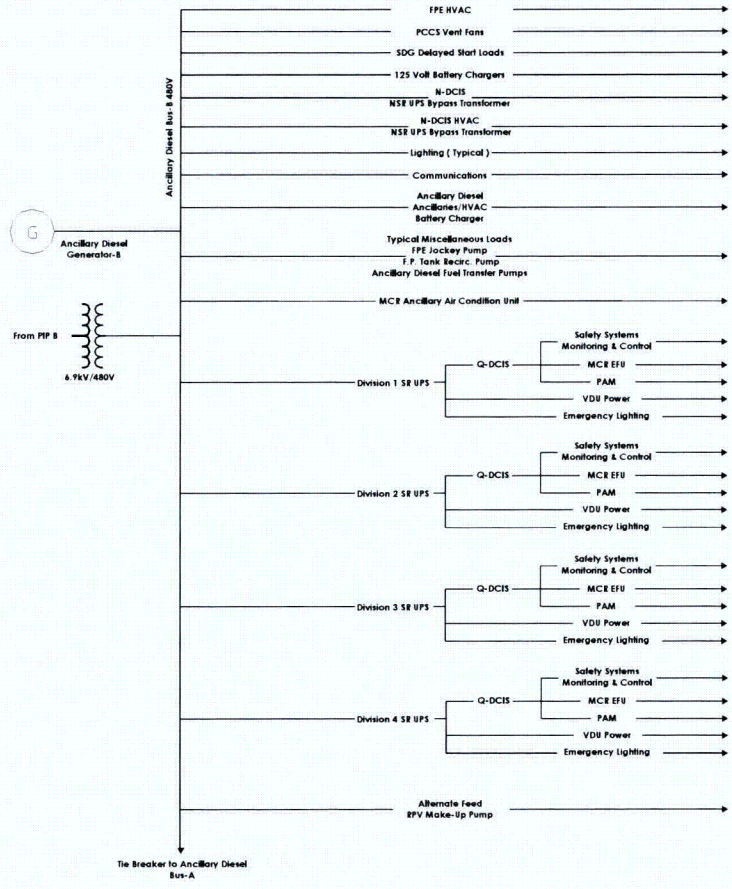
Ancillary Diesel Bus-B 480V
FPE HVAC
PCCS Vent Fans
SDG Delayed Start Loads
125 Volt Battery Chargers
N-DCIS
NSR UPS Bypass Transformer
N-DCIS HVAC
NSR UPS Bypass Transformer
Lighting (Typical)
Communications
Ancillary Diesel
Ancillaries/HVAC
Battery Charger
Typical Miscellaneous Loads
FPE Jockey Pump
F.P. Tank Recirc. Pump
Ancillary Diesel Fuel Transfer Pumps
MCR Ancillary Air Condition Unit
G
Ancillary Diesel
Generator-B
From PIP B
6.9kV/480V
Division 1 SR UPS
Q-DCIS
Safety Systems
Monitoring & Control
MCR EFU
PAM
VDU Power
Emergency Lighting
Division 2 SR UPS
Q-DCIS
Safety Systems
Monitoring & Control
MCR EFU
PAM
VDU Power
Emergency Lighting
Division 3 SR UPS
Q-DCIS
Safety Systems
Monitoring & Control
MCR EFU
PAM
VDU Power
Emergency Lighting
Division 4 SR UPS
Q-DCIS
Safety Systems
Monitoring & Control
MCR EFU
PAM
VDU Power
Emergency Lighting
Alternate Feed
RPV Make-Up Pump
Tie Breaker to Ancillary Diesel
Bus-A

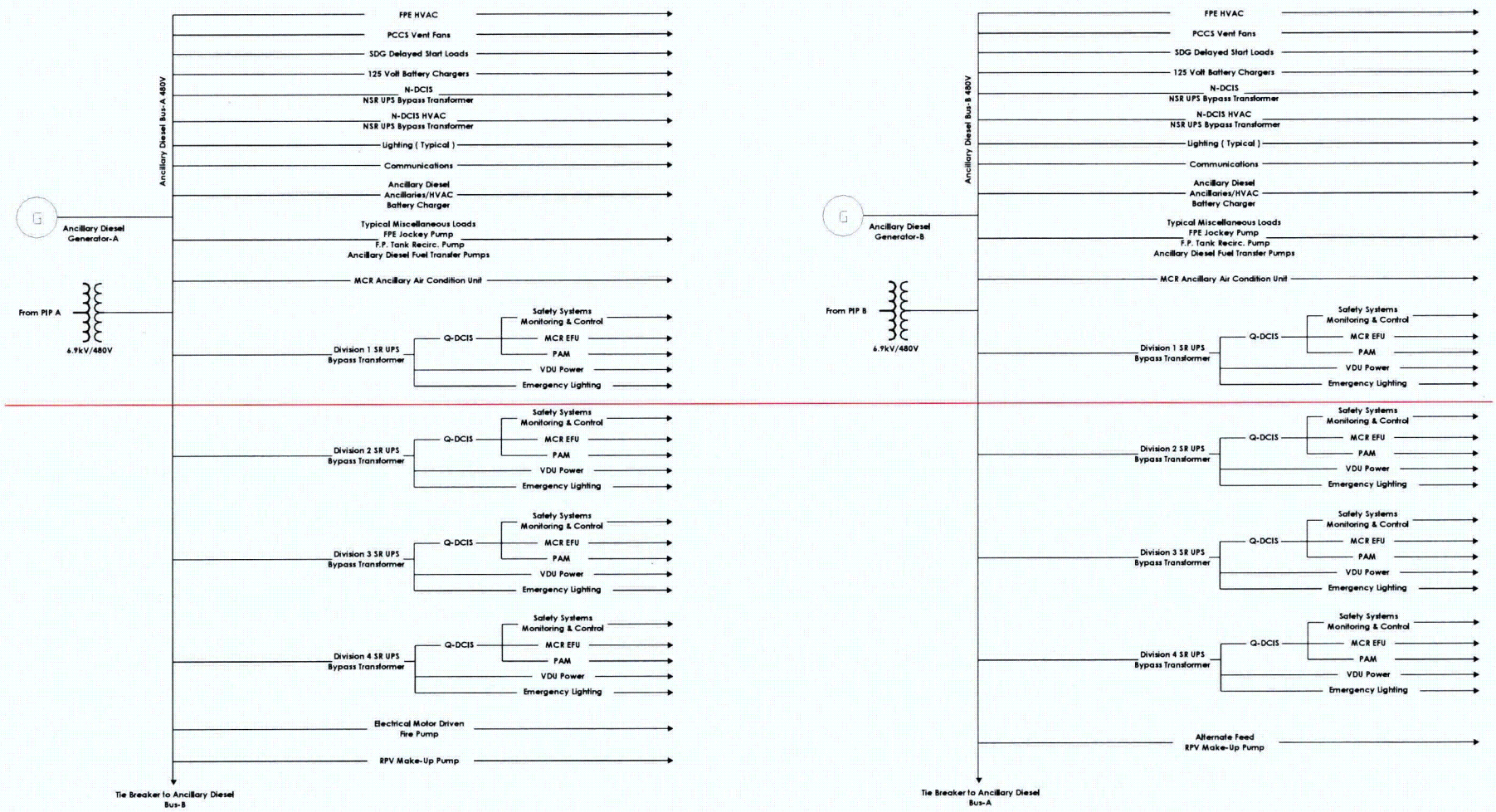

Figure 8.3-3. Ancillary Power Functional Figure

Sh 1 of 1