Pull AB → 197° Total bends
AC → 120°

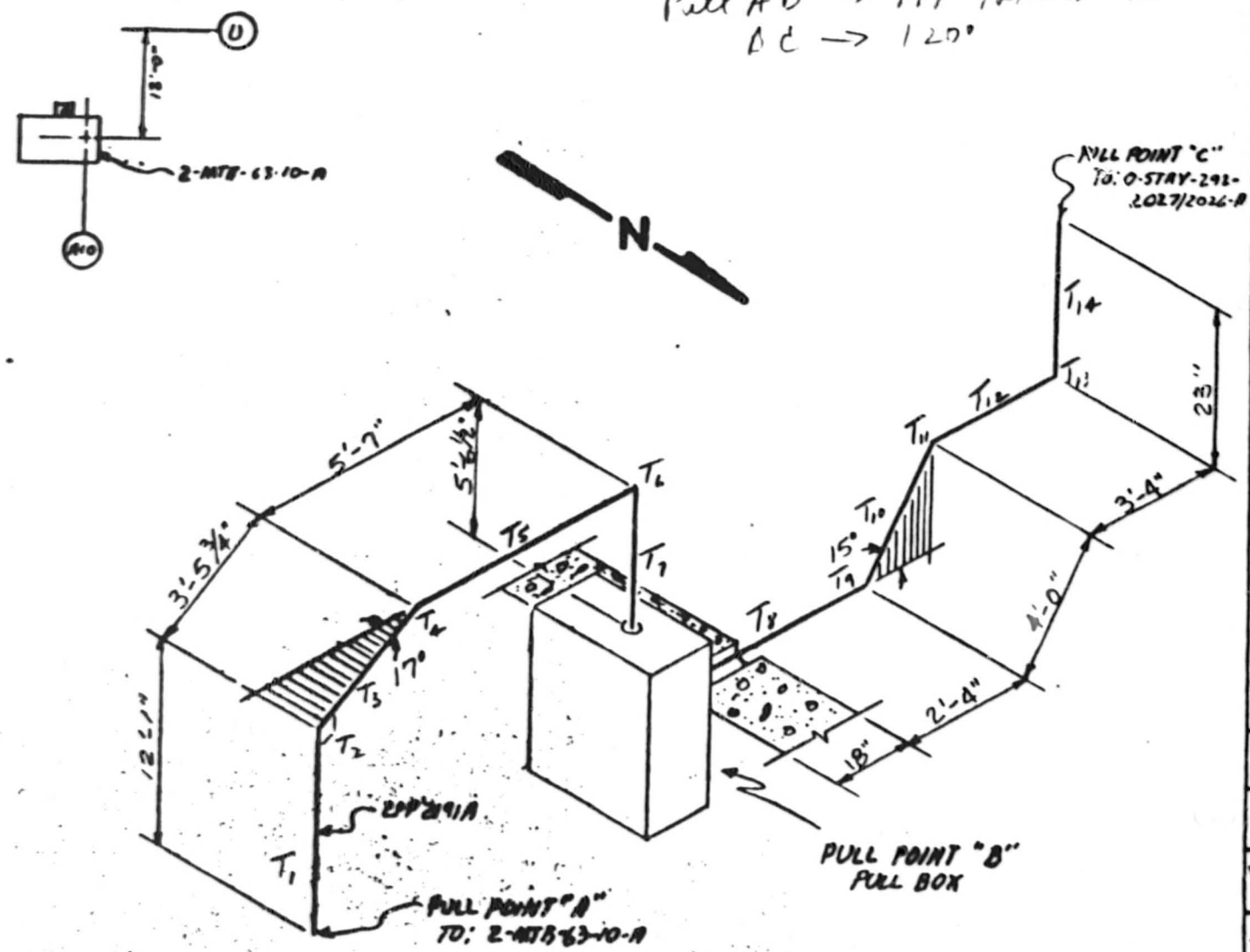

NOTES:

1. ALL BENDS HAVE A RADIUS OF UNLESS OTHERWISE NOTED. (4I)

2. TOLERANCES AS SPECIFIED BY EP22.29

3. ALL BENDS NOT SPECIFIED ARE 90°

4.

CABLE UNID	MANU-FACTURER
2PP600A 3-1/C # 2/0 NVSA (Pump supply) OD = 1.117"	LATER WNC .710 #/ft

23% fill → 3x.710

5. REF. DWG #457N822-13

6. ALL DIMENSIONS CL TO CL

AUXILIARY BUILDING - 2

RACEWAY ISOMETRIC
DWG. ELE. 692 COND. #2PP2191A

WATTS BAR NUCLEAR PLANT
TVA/OC

ENGINEER: U.D. Pelio
DATE: 8-22-85

VERIFICATION: Charles L. Chen

APPROVED: [signature]

PROCESS NO: NA
EEB-EP 22.29
SAMPLE PROGRAM

CE & QA SIGNATURES SIGNIFY ACCEPTANCE TO "WORSE CASE" CRITERIA.

CE:

QA:

CONDUIT 2PP-2191A (three cables) SHEET 1 OF 2

$K = .3 W_c = 3 \times .71 = 2.1$

$D/d = \frac{4.03}{1.117} = 3.61 > 2.5 \Rightarrow$ cradle formation +

from Appendix E curves, $W_c = 1.195 \Rightarrow K = W_c K = 1.195 \times .3 = .3585$

COMPUTED [illegible] DATE 8/27/85

CHECKED JRB DATE 8-29-85

PULL A to B

T_1 Vertical Straight (Up) $T = LW_c = \left(12 + \frac{1}{12}\right) \times 2.13$
$= 25.74\#$

T_2 Vertical Bend (90°) $T = T_1 e^{Kb} = 25.74 e^{.36\pi/2} = 25.74 \times 1.76$
$= 45.20\#$

T_3 Horizontal Straight $T = LW_c K + T_2 = \left(3 + \frac{5.25}{12}\right) \times 2.13 \times .36 + 45.20$
$= 47.86\#$

T_4 Horizontal Bend (17°) $T = T_3 e^{Kb} = 47.86 e^{.36 \times .3} = 47.86 \times 1.11$
$= 53.23\#$

T_5 Horiz. Straight $T = LW_c K + T_4 = \left(5 + \frac{7}{12}\right) \times 2.13 \times .36 + 53.23$
$= 57.49\#$

T_6 Vertical Bend (90°) $T = T_5 e^{Kb} = 57.49 e^{.36\pi/2} = 57.49 \times 1.76$
$= 100.96\#$

T_7 Vertical Straight (Down) $T = T_6 - LW_c = 100.96 - \left(5 + \frac{6.5}{12}\right) \times 2.13$
$= 89.16\#$

$$SWP_{AB} = \frac{1}{3} \times (3W_c - 2) \times \frac{T_6}{R} = \frac{1}{3} \times (3 \times 1.195 - 2) \times \frac{100.96}{1.165}$$

$$\boxed{SWP_{AB} = 45.79\ \#/ft}$$

This is worst case!

(Pull B to A is less significant due to more downward length involved).

TVA 11030 (WM 7-75)

CWL # 2PP-2191A (Single Tube) SHEET 2 OF 2

COMPUTED RHR DATE 8-27-85
CHECKED JRB DATE 8-29-85

PULL D to C

T_8 Horiz. Straight $T = LW_c\underline{K} = \left(2+\frac{22}{12}\right)\times 2.13 \times .36$
$= 2.93$ #

T_9 Vertical Bend (15°) $T = T_8 e^{\underline{K}b} = 2.93\, e^{.36\times .26} = 2.93 \times 1.10$
$= 3.22$ #

T_{10} Up Ramp (15°) $T = LW_c(\sin\alpha + \underline{K}\cos\alpha) + T_9$
$= 4\times 2.13(\sin 15° + .36\cos 15°) + 3.22$
$= 8.37$ #

T_{11} Vertical Bend (15°) $T = T_{10} e^{\underline{K}b} = 8.37\, e^{.36\times .26} = 8.37 \times 1.10$
$= 9.19$ #

T_{12} Horiz. Straight $T = LW_c\underline{K} + T_{11} = \left(3+\frac{4}{12}\right)\times 2.13 \times .36 + 9.19$
$= 11.74$ #

T_{13} Vertical Bend (90°) $T = T_{12} e^{\underline{K}b} = 11.74\, e^{.36\pi/2} = 11.74 \times 1.76$
$= 20.62$ #

T_{14} Vertical Straight (Up) $T = LW_c + T_{13} = \frac{23}{12}\times 2.13 + 20.62$
$= 24.70$ #

$$SWP_{AD} = \frac{1}{3}\times(3W_c - 2)\times\frac{T_{13}}{R} = \frac{1}{3}\times(3\times 1.195 - 2)\times\frac{20.62}{1.165}$$

$$\boxed{SWP_{BC} = 9.35\ \#/ft}$$

TVA 11030 (WM-7-75)

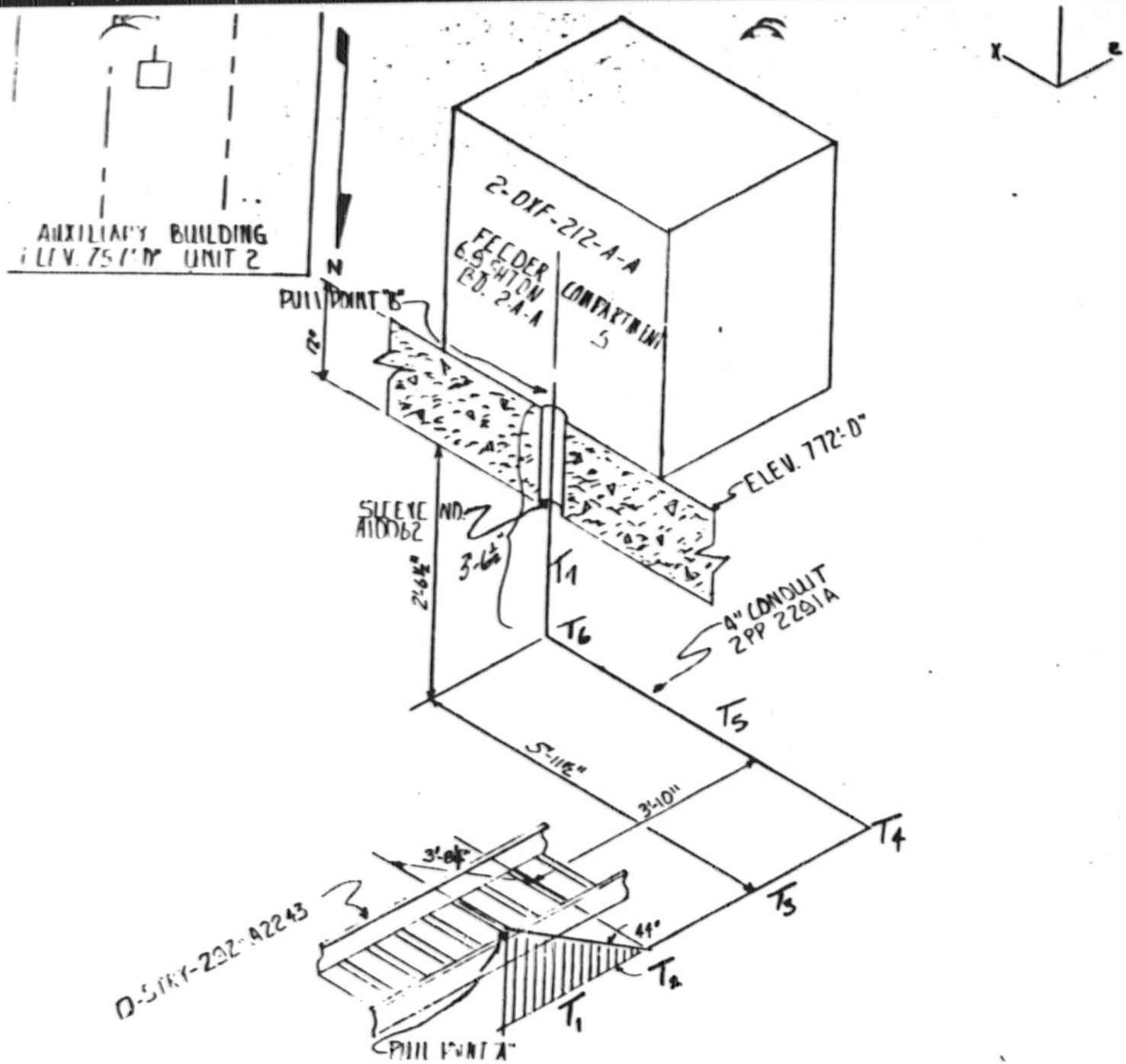

NOTES:

1. ALL BENDS HAVE A RADIUS OF 16" UNLESS OTHERWISE NOTED. (4" I) CONDUIT

2. TOLERANCES AS SPECIFIED BY EP-22.29

3. ALL BENDS NOT SPECIFIED ARE 90°

4.

CABLE UNID	MANU-FACTURER
2PP 750A	LATER

5. REF. DWG. @ 45W828-7 & 45W830-2.

6. ALL DIMENSIONS a to a

AUXILIARY BUILDING UNIT-2

RACEWAY ISOMETRIC
DWG. ELE. 757' COND. @ 2PP2291A

WATTS BAR NUCLEAR PLANT
TVA/OC

ENGINEER: Lawrence D. Jackson | DATE: 8-25-85

VERIFICATION: J.W. Hare

APPROVED: [signature]

DRAWING NO: N/A EEB EP-22.29
SAMPLE PROGRAM

OEBQA SIGNATURES SIGNIFY ACCEPTANCE TO "WORSE CASE" CRITERIA.

OR: | QA: *

* QA Question this as a worse case

CONDUIT 2PP2291A (4I) FROM pull point A to B
CABLE 2PP 750A 3-1/C #2/0 WNB
VS .710 lb/ft O.D. = 1.117

COMPUTED BMS DATE 9/3/85
CHECKED JEB DATE 9-3-85

$W_t = (3)(0.110) = 2.13$

$\frac{D}{d} = \frac{4.03}{1.117} = 3.61$ (> 2.5 → cradled configuration)

$W_c = 1.19$

$\underline{K} = K W_c = (0.3)(1.19) = 0.36$

SEGMENT	TYPE	ALGORITHM	TENSION
T_1	Down slope (44°)	$T_1 = L W_t (\underline{K} \cos\alpha - \sin\alpha) + \cancel{T_0}^{\,0}$	
		$= (3.69)(2.13)(0.36 \cos 44° - \sin 44°) = -3.42$	

Since this result is a negative value, assume the actual accrual to pulling tension begins at the beginning of the straight horizontal section, T_3.

T_3	Straight	$T_3 = L W_t \underline{K} + \cancel{T_2}^{\,0}$	
		$= (3.83)(2.13)(0.36)$	$= 2.94$
T_4	Horiz bend (90°)	$T_4 = T_3 e^{\underline{K} b}$	
		$= 2.94 e^{(0.36)(1.57)}$	$= 5.17$
T_5	Straight	$T_5 = L W_t \underline{K} + T_4$	
		$= (5.96)(2.13)(0.36) + 5.17$	$= 9.74$
T_6	Vert bend (90°)	$T_6 = T_5 e^{\underline{K} b}$	
		$= 9.74 e^{(0.36)(1.57)}$	$= 17.14$

TVA 11030 (WM 7-75)

COMPUTED RMS DATE 9/3/85
CHECKED JEB DATE 9-3-85

SEGMENT	TYPE	ALGORITHM	TENSION
T_7	Up slope (90°)	$T_7 = LW_c + T_6$	

$$= (3.54)(2.13) + 17.14 = 24.68$$

$$SWP = \frac{1}{3}\left[3W_c - 2\right]\left[\frac{T}{R}\right] \qquad @\,T_6 \quad R = 16''$$

$$= \frac{1}{3}\left[3(1.19) - 2\right]\left[\frac{17.14}{1.165}\right]$$

$$= \underline{\underline{7.70 \ \frac{lb}{ft}}}$$

TOTAL BENDS = 180°

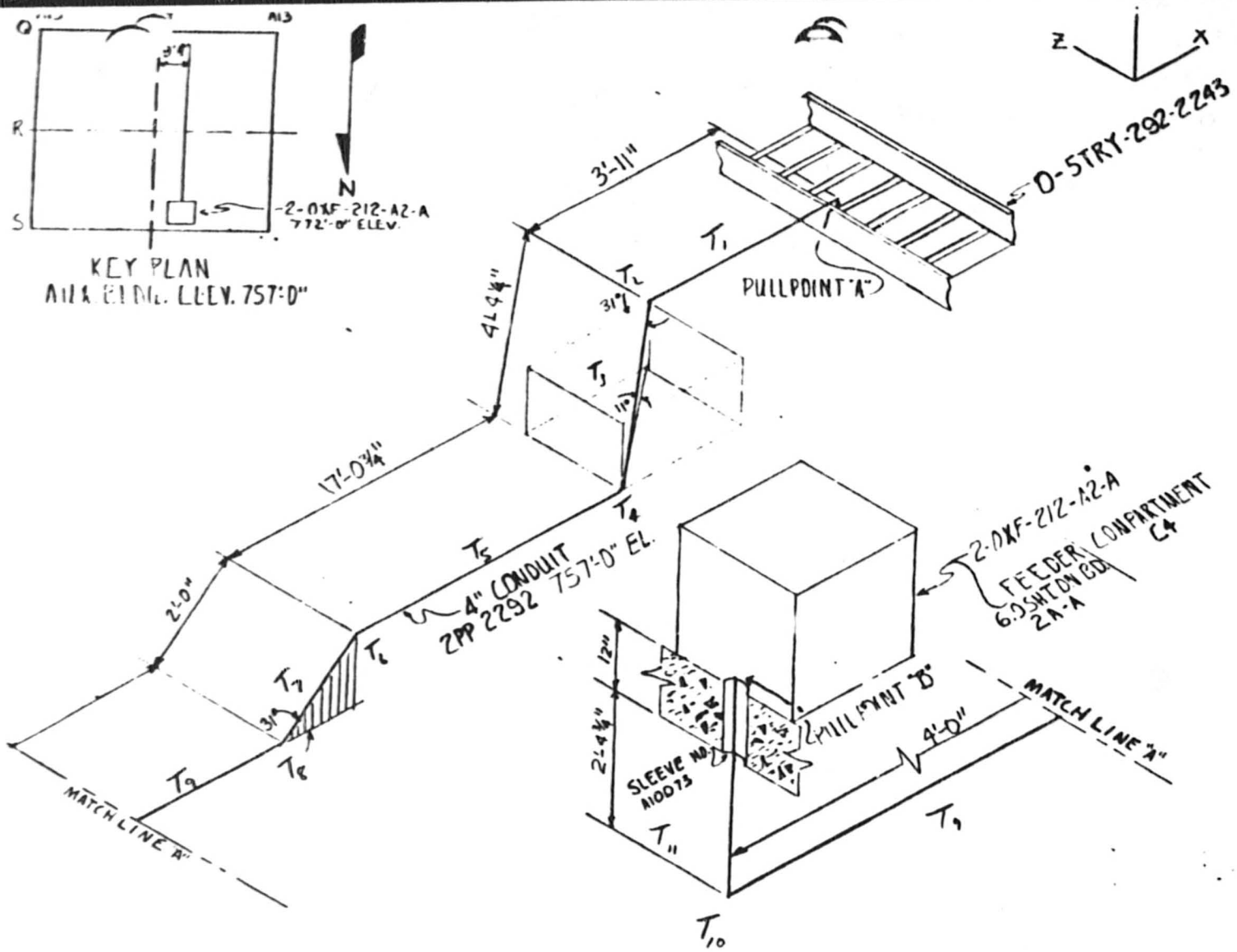

NOTES:

1. ALL BENDS HAVE A RADIUS OF 16" UNLESS OTHERWISE NOTED. (4" I) CONDUIT
2. TOLERANCES AS SPECIFIED BY EP-22.29
3. ALL BENDS NOT SPECIFIED ARE 90°
4.

CABLE UNID	MANU-FACTURER
2PP759A 3-1/c #4/0 NVSA weight per conductor = .710 #/ft 1.117" ØD	LATER WNG XFMR SUPPLY

.980 CSA ⇒ 23.10% fill

5. REF. DWG #45W828-7 & 45W830-2
6. ALL DIMENSIONS C TO C

ALLXILIARY BUILDING UNIT-2

RACEWAY ISOMETRIC
DWG. ELE. 757' COND. #2PP2292A

WATTS BAR NUCLEAR PLANT
TVA/OC

ENGINEER:	DATE:
Lawrence D Jackson	8-25-86

VERIFICATION: Charles L. Colson Jr.

APPROVED: J. W. Name

PROGRAM NO: EZB-EP-22.29
SAMPLE PROGRAM

OE & QA SIGNATURES SIGNIFY ACCEPTANCE TO "WORSE CASE" CRITERIA.

OE:

QA: A.W. Rogers

CND NO. ZFP-2292A (3 cables) SHEET 1 OF 2

$K = .3$, $D/d = 4.03/1.117 = 3.61 > 2.5 \Rightarrow$ cradle formation

$W_t = 3 \times .71 = 2.13$, $W_c = 1.195$

, $\underline{K} = W_c K = 1.195 \times .3 = .3585$

COMPUTED RHB DATE 8-31-85

CHECKED JRB DATE 9-3-85

PULL A to B (214°)

T_1 Horiz. Straight $T = \underline{K} L W_t = .3585 \times (3 + \frac{11}{12}) \times 2.13$
$= 2.99\#$

T_2 Vertical Bend (31°) $T = T_1 e^{\underline{K}b} = 2.99\, e^{.3585 \times .54} = 2.99 \times 1.21$
$= 3.63\#$

T_3 Down Ramp (11°) $T = L W_t (\underline{K} \cos\alpha - \sin\alpha) + T_2$
$= (4 + \frac{4.25}{12}) \times 2.13 (.3585 \cos 11° - \sin 11°) + 3.63$
$= 5.13\#$

T_4 Vertical Bend (31°) $T = T_3 e^{\underline{K}b} = 5.13\, e^{.3585 \times .54} = 5.13 \times 1.21$
$= 6.22\#$

T_5 Horiz. Straight $T = \underline{K} L W_t + T_4 = .3585 \times (17 + \frac{.75}{12}) \times 2.13 + 6.22$
$= 19.25\#$

T_6 Vertical Bend (31°) $T = T_5 e^{\underline{K}b} = 19.25 e^{.3585 \times .54} = 19.25 \times 1.21$
$= 23.37\#$

T_7 Down Ramp (31°) $T = L W_t (\underline{K} \cos\alpha - \sin\alpha) + T_6$
$= 2 \times 2.13 (.3585 \cos 31° - \sin 31°) + 23.37$
$= 22.49\#$

T_8 Vertical Bend (31°) $T = T_7 e^{\underline{K}b} = 22.49\, e^{.3585 \times .54} = 22.49 \times 1.21$
$= 27.30\#$

T_9 Horiz. Straight $T = \underline{K} L W_t + T_8 = .3585 \times 4 \times 2.13 + 27.3$
$= 30.35\#$

T_{10} Vertical Bend (90°) $T = T_9 e^{\underline{K}b} = 30.35\, e^{.3585 \times \pi/2} = 30.35 \times 1.76$
$= 53.31\#$

T_{11} Vertical Straight (up) $T = L W_t + T_{10} = (3 + \frac{4.75}{12}) \times 2.13 + 53.31$
$= 60.54$

TVA 110 80 (WM 7 79)

COMPUTED RHB DATE 8-31-85
CHECKED JRB DATE 9-3-85

$SWP_{AB} = 1/3 \times (3W_c - 2) \times T_{10}/R = 1/2 \times (3 \times 1.195 - 2) \times 53.31/1.165$

$\boxed{SWP_{AB} = 24.18 \ \#/ft}$ Worst case!

PULL B to A is less significant, since a negative tension than the 90° bend (T_{10}) allows exclusion of the first two legs (T_{11} + T_{10}) + beginning the calculation @ T_9; the remaining legs will provide insufficient tension as to not seriously outweigh "PULL A to B".

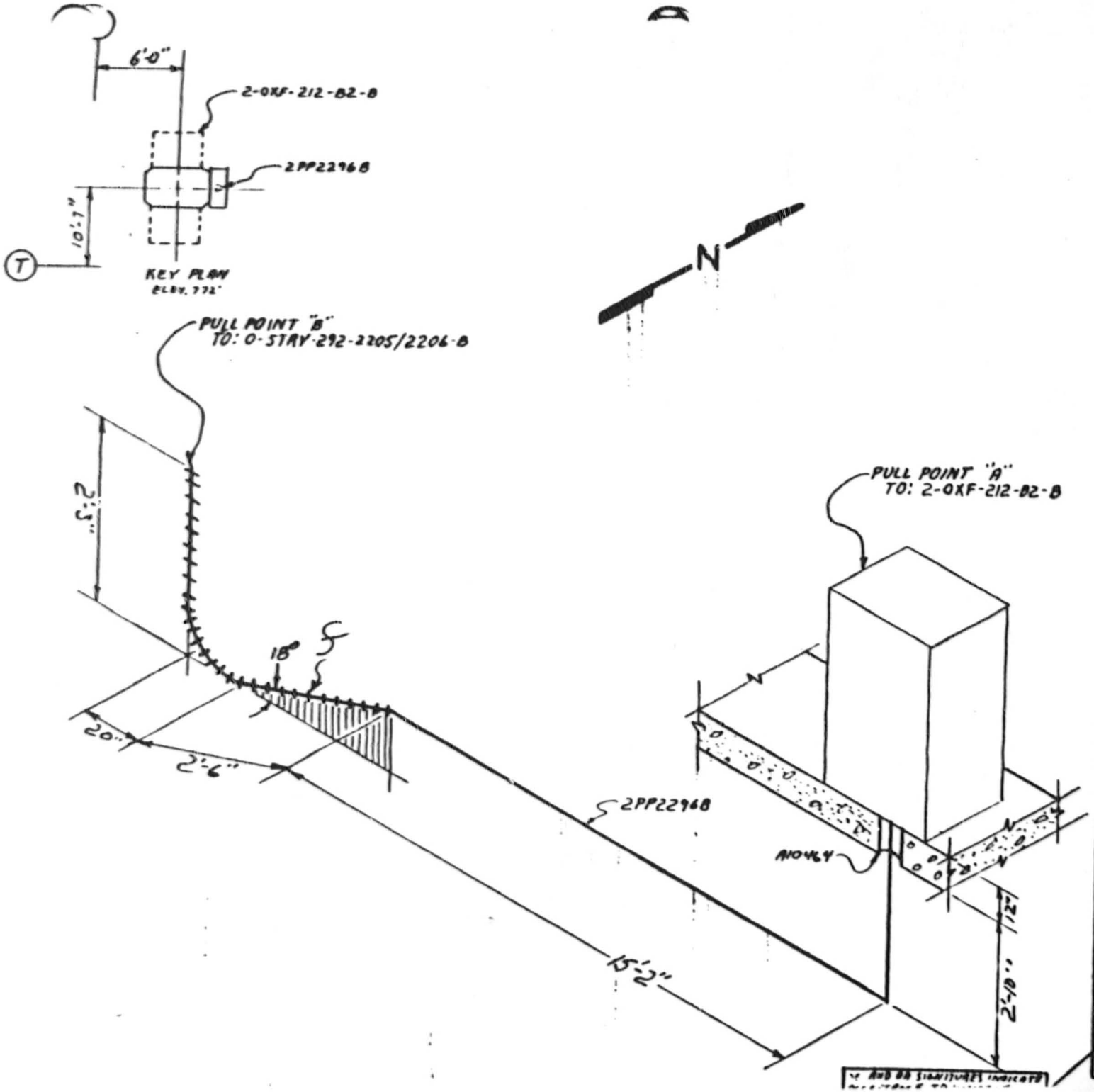

NOTES:

1. ALL BENDS HAVE A RADIUS OF 16" UNLESS OTHERWISE NOTED. (4I)

2. TOLERANCES AS SPECIFIED BY EP22.29

3. ALL BENDS NOT SPECIFIED ARE 90°

4.

CABLE UNID	MANU-FACTURER
2PP765B	LATER

5. REF. DWG #45W828-7

6. ALL DIMENSIONS CL TO CL

AUXILIARY BUILDING-UNIT 2

RACEWAY ISOMETRIC DWG. ELE. 757' COND. #2PP2296B

WATTS BAR NUCLEAR PLANT
TVA/OC

ENGINEER:	DATE:
[signature]	8-24-85

VERIFICATION: Charles L. Chum Jr.

APPROVED: [signature]

DRAWING NO:	
E2PP2296B S.P.	R.0

OC:	QA:
[signature]	[signature]

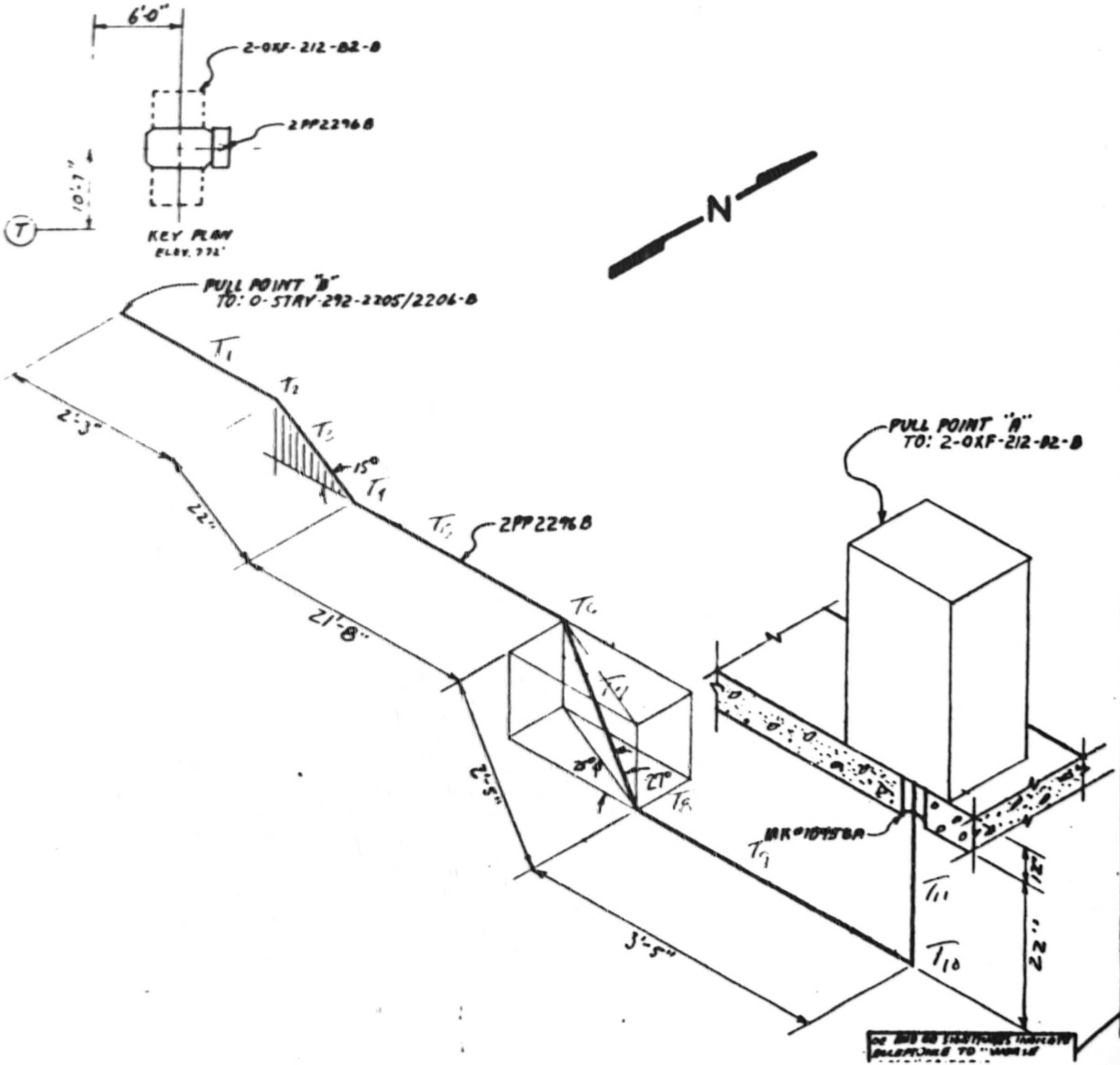

NOTES:

1. ALL BENDS HAVE A RADIUS OF 16" UNLESS OTHERWISE NOTED. (4I)

2. TOLERANCES AS SPECIFIED BY EP22.29

3. ALL BENDS NOT SPECIFIED ARE 90°

4.

CABLE UNID	MANU-FACTURER
2PP765B	LATER

5. REF. DWG #45W828-7

6. ALL DIMENSIONS a to a

AUXILIARY BUILDING-UNIT 2

RACEWAY ISOMETRIC
DWG. ELE. 757' CONT. 02PP2296B

WATTS BAR NUCLEAR PLANT
TVA/OC

ENGINEER: [signature]	DATE: 8-24-85
VERIFICATION: Charles L. Chum Jr.	
APPROVED: [signature]	
DRAWING NO: EEB-EP22.29 SIMPLE PROGRAM	
QC:	QA:

CONDUIT 2PP2296B 4I 4.03 [From pull point B to A]
CABLE 2PP765E 3-1/c #2/0 WNB
[V5] 0.710 lb/ft O.D. = 1.117 in.

COMPUTED RMS DATE 8/29/85
CHECKED JRB DATE 8-30-85

$W_l = (3)(0.710) = 2.13 \frac{lb}{ft}$

$\frac{D}{a} = \frac{4.03}{1.117} = 3.61$ (>2.5 ∴ cradled configuration)

$W_c = 1.19$

$\underline{K} = K W_c = (0.3)(1.19) = 0.36$

SEGMENT	TYPE	ALGORITHM	TENSION
T_1	Straight	$T_1 = L W_l \underline{K} + \cancel{T_m}^{\to 0}$ $= (2.25)(2.13)(0.36)$	= 1.73
T_2	Vert bend (15°)	$T_2 = T_1 e^{\underline{K}b}$ $= 1.73\, e^{(0.36)(0.26)}$	= 1.90
T_3	Down slope (15°)	$T_3 = L W_l (\underline{K} \cos a - \sin a) + T_2$ $= (\frac{22}{12})(2.13)(0.36 \cos 15° - \sin 15°) + 1.90$	= 2.24
T_4	Vert bend (15°)	$T_4 = T_3 e^{\underline{K}b}$ $= 2.24\, e^{(0.36)(0.26)}$	= 2.46
T_5	Straight	$T_5 = L W_l \underline{K} + T_4$ $= (21.67)(2.13)(0.36) + 2.46$	= 19.08
T_6	Vert bend (27°)	$T_6 = T_5 e^{\underline{K}b}$ $= 19.08\, e^{(0.36)(0.47)}$	= 22.61

TVA 11030 (WM-7-75)

COMPUTED RMS DATE 8/29/85
CHECKED JRB DATE 8-30-85

SEGMENT	TYPE	ALGORITHM	TENSION
T_7	Down slope (25°)	$T_7 = LW_t(\underline{K}\cos a - \sin a) + T_6$	
		$= (2.42)(2.13)(0.36\cos 25° - \sin 25°) + 22.61$	$= 22.11$
T_8	Vert bend (27°)	$T_8 = T_7 e^{\underline{K}b}$	
		$= 22.11 e^{(0.36)(0.47)}$	$= 26.19$
T_9	Straight	$T_9 = LW_t \underline{K} + T_8$	
		$= (3.42)(2.13)(0.36) + 26.19$	$= 28.81$
T_{10}	Vert bend (90°)	$T_{10} = T_9 e^{\underline{K}b}$	
		$= 28.81 e^{(0.36)(1.57)}$	$= 50.70$
T_{11}	Up slope 90°	$T_{11} = LW_t + T_{10}$	
		$= \left(\frac{34}{12}\right)(2.13) + 50.70$	$= 56.74$

$$SWP = \frac{1}{3}\left[3W_c - 2\right]\left[\frac{T}{R}\right] \quad @\ T_{10} \quad R = 16''$$

$$= \frac{1}{3}\left[3(1.19) - 2\right]\left[\frac{50.70}{1.165}\right]$$

$$\underline{\underline{22.78\ \frac{lb}{ft}}}$$

TOTAL BENDS = 174°

TVA 11030 (WM-7-75)

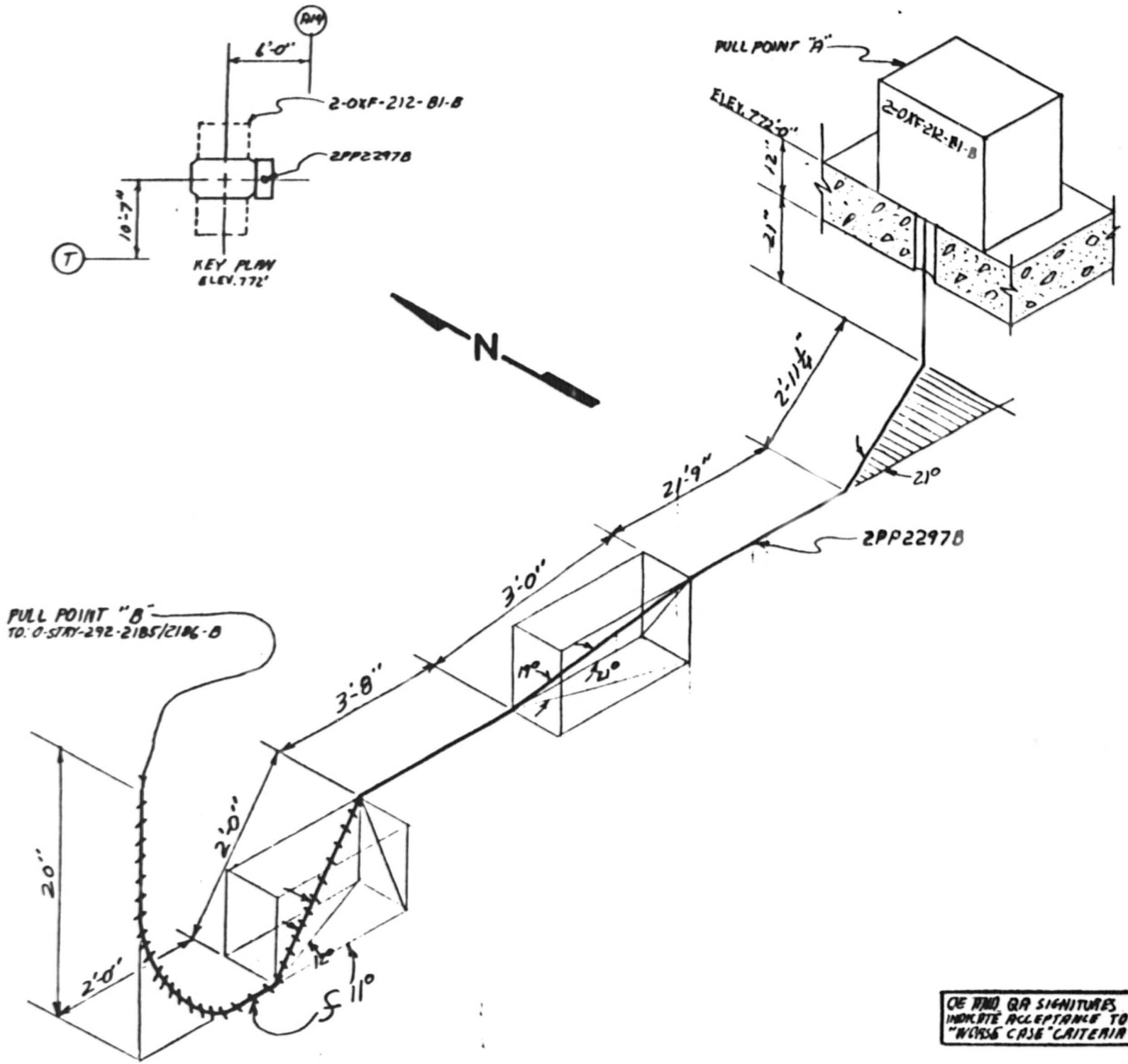

NOTES:

1. ALL BENDS HAVE A RADIUS OF 16" UNLESS OTHERWISE NOTED. (4I)

2. TOLERANCES AS SPECIFIED BY EP22.29.

3. ALL BENDS NOT SPECIFIED ARE 90°

4.

CABLE UNID	MANU-FACTURER
2PP762B	LATER

5. REF. DWG #45W828-7 45W830-2

6. ALL DIMENSIONS ℄ to ℄

AUXILIARY BUILDING-UNIT 2

RACEWAY ISOMETRIC DWG. ELE. 772' COND. #2PP2297B

WATTS BAR NUCLEAR PLANT TVA/OC

ENGINEER:	DATE:
U.D. Patin	8-28-85

VERIFICATION: J.W. Nave

APPROVED: R.H. Dowenyue

DRAWING NO:	
E2PP2297B S.P.	R.0

OE AND QA SIGNITURES INDICATE ACCEPTANCE TO "WORSE CASE" CRITERIA

OE:	QA:
Joe A Fenn	G.W. Rogers

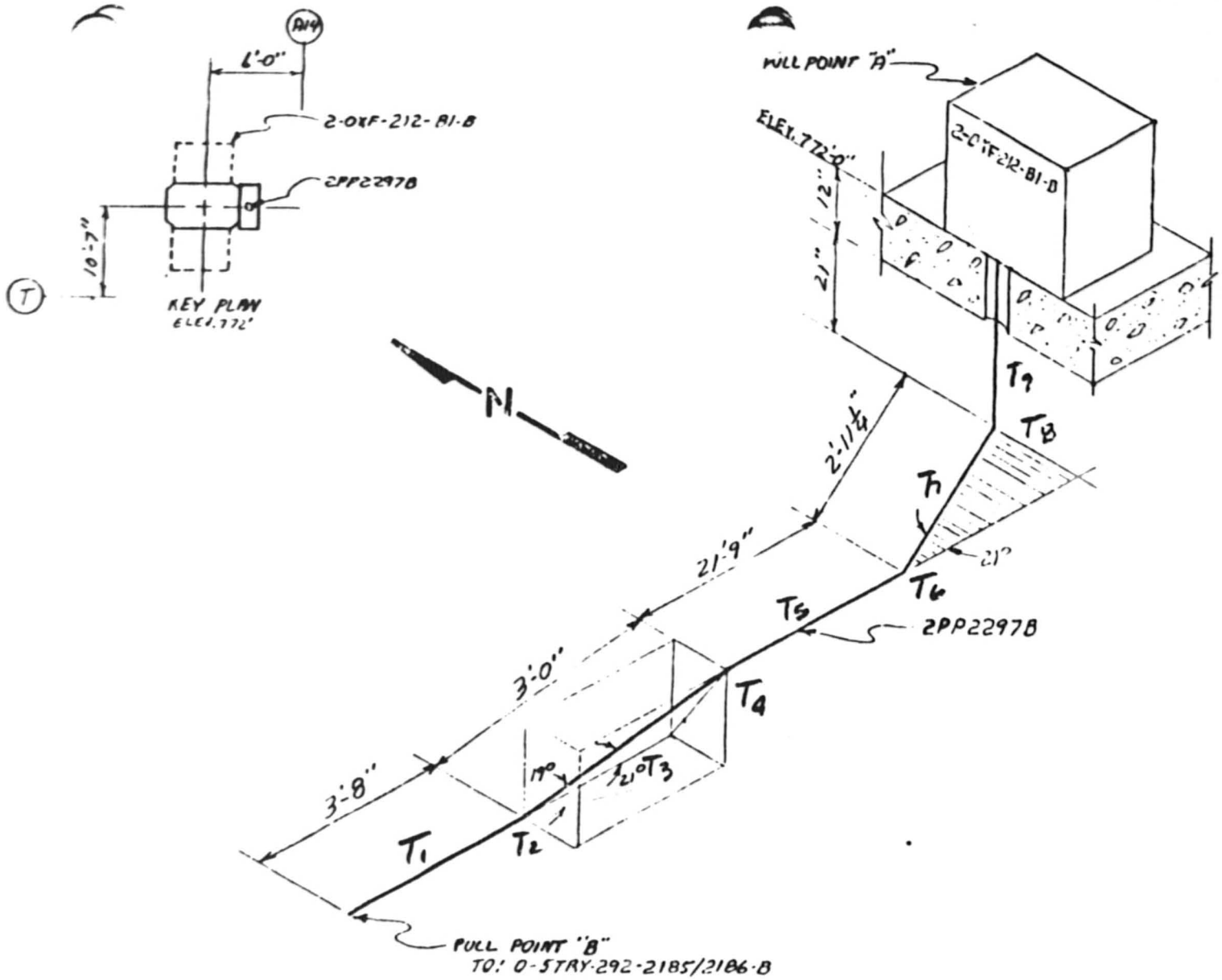

NOTES:

1. ALL BENDS HAVE A RADIUS OF 16" UNLESS OTHERWISE NOTED. (4I)

2. TOLERANCES AS SPECIFIED BY EP22.29.

3. ALL BENDS NOT SPECIFIED ARE 90°

4.

CABLE UNID	MANU-FACTURER
2PP762B	LATER

5. REF. DWG #4SW828-7 4SW830-2

6. ALL DIMENSIONS a to c

AUXILIARY BUILDING-UNIT 2

RACEWAY ISOMETRIC DWG. ELE. 772' COND. #2PP2297B

WATTS BAR NUCLEAR PLANT

TVA/OC

ENGINEER: [signature] DATE: 8-28-85

VERIFICATION: [signature]

APPROVED: [signature]

DRAWING NO: EEB-EP22.29 SAMPLE PROGRAM

[illegible] QA SIGNATURE INDICATE ACCEPTANCE TO [illegible] CRITERIA

OK: [illegible] DATE:

CONDUIT 2PP2297B (4I) From pull point B to A
CABLE 2PP 762B 3-1/C #2/0 WNB
[VS] .710 lb/ft O.D. = 1.117

COMPUTED PMS DATE 9/4/85
CHECKED JRB DATE 9-5-85

$W_t = (0.710)(3) = 2.13$

$\frac{D}{d} = \frac{4.03}{1.117} = 3.61$ (>2.5 → cradled configuration)

$W_c = 1.20$

$\underline{K} = KW_c = (0.3)(1.20) = 0.36$

SEGMENT	TYPE	ALGORITHM	TENSION
T_1	Straight	$T_1 = LW_t\underline{K} + \cancel{T_{in}}^{0}$	
		$= (3.67)(2.13)(0.36) =$	2.81
T_2	Vert bend (21°)	$T_2 = T_1 e^{\underline{K}b}$	
		$= 2.81e^{(0.36)(0.37)} =$	3.21
T_3	Up slope (19°)	$T_3 = LW_t(\sin a + \underline{K}\cos a) + T_2$	
		$= (3)(2.13)(\sin 19° + 0.36\cos 19°) + 3.21$	
		$=$	7.47
T_4	Vert bend (21°)	$T_4 = T_3 e^{\underline{K}b}$	
		$= 7.47e^{(0.36)(0.37)} =$	8.53
T_5	Straight	$T_5 = LW_t\underline{K} + T_4$	
		$= (21.75)(2.13)(0.36) + 8.53 =$	25.21
T_6	Horiz bend (21°)	$T_6 = T_5 e^{\underline{K}b}$	
		$= 25.21e^{(0.36)(0.37)} =$	28.80

TVA 11030 (WM 7-75)

COMPUTED RMS DATE 9/4/85
CHECKED JRB DATE 9-5-85

SEGMENT	TYPE	ALGORITHM	TENSION
T_7	Straight	$T_7 = LW_t K + T_6$	
		$= (2.94)(2.13)(0.36) + 28.80 =$	31.05
T_8	Vert bend (90°)	$T_8 = T_7 e^{\mu\theta}$	
		$= 31.05 e^{(0.36)(1.57)} =$	54.66
T_9	Up slope (90°)	$T_9 = LW_t + T_8$	
		$= \left(\frac{33}{12}\right)(2.13) + 54.66 =$	60.52

$$SWP = \frac{1}{3}\left[3W_c - 2\right]\left[\frac{T}{R}\right] \qquad @\ T_8 \quad R = 16''$$

$$= \frac{1}{3}\left[3(1.20) - 2\right]\left[\frac{54.66}{1.165}\right]$$

$$\underline{25.02\ \frac{lb}{ft}}$$

TOTAL BENDS = 153°

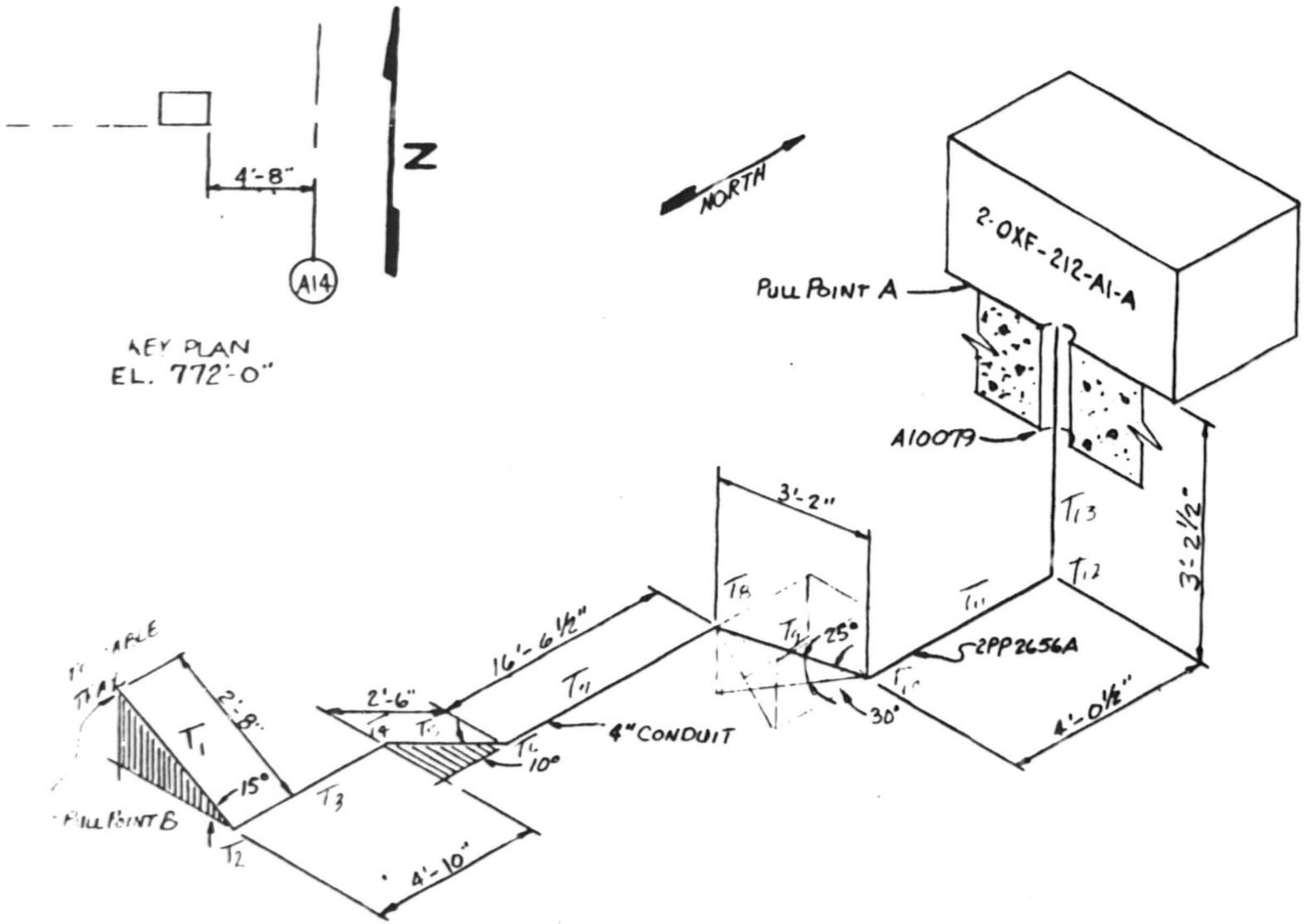

NOTES:

1. ALL BENDS HAVE A RADIUS OF 16.0" UNLESS OTHERWISE NOTED. (4"I)

2. TOLERANCES AS SPECIFIED BY EP22.29

3. ALL BENDS NOT SPECIFIED ARE 90°

4.

CABLE UNID	MANU-FACTURER
2PP756A	Later

5. REF. DWG #45W828-7 45W830-2

6. ALL DIMENSIONS CL TO CL

AUX. BLDG. – UNIT 2

RACEWAY ISOMETRIC
DWG. ELE.757 COND. #2PP2656A

WATTS BAR NUCLEAR PLANT
TVA/OC

ENGINEER: Charles L. Colvin Jr. DATE: 8-24-85

VERIFICATION: W. D. Pelin

APPROVED: [signature]

DRAWING NO: NA EEB-EP-22.29 SAMPLE PROGRAM

OE AND QA SIGNATURES INDICATE ACCEPTANCE TO "WORSE CASE" CRITERIA.

OE: QA:

CONDUIT 2PP2656A 4I 4.03 [From pull point B to A]
CABLE 2PP756A 3-1/C #2/0 NNB
VS .710 lb/ft. O.D. = 1.117

COMPUTED RMS DATE 8/29/85
CHECKED JRB DATE 8-30-85

$W_t = 3(.710) = 2.13$

$\frac{D}{d} = \frac{4.03}{1.117} = 3.61$ > 2.5 ∴ cradled configuration

$W_c = 1.19$

$\underline{K} = KW_c = (0.3)(1.19) = 0.36$

SEGMENT	TYPE	ALGORITHM	TENSION
T_1	Down slope (15°)	$T_1 = LW_t(\underline{K}\cos\alpha - \sin\alpha) + \cancel{T_{in}}^{\,0}$ $= (2.67)(2.13)(0.36\cos 15° - \sin 15°)$	$= 0.51$
T_2	Horiz bend (90°)	$T_2 = T_1 e^{\underline{K}b}$ $= 0.51 e^{(0.36)(1.57)}$	$= 0.89$
T_3	Straight	$T_3 = LW_t \underline{K} + T_2$ $= (4.83)(2.13)(0.36) + 0.89$	$= 4.59$
T_4	Horiz bend (10°)	$T_4 = T_3 e^{\underline{K}b}$ $= 4.59 e^{(0.36)(.17)}$	$= 4.88$
T_5	Straight	$T_5 = LW_t \underline{K} + T_4$ $= (2.5)(2.13)(0.36) + 4.88$	$= 6.80$
T_6	Horiz bend (10°)	$T_6 = T_5 e^{\underline{K}b}$ $= 6.80 e^{(0.36)(0.17)}$	$= 7.23$

TVA 11030 (WM 7-75)

COMPUTED RMS DATE 8/29/75
CHECKED JRB DATE 8-30-85

SEGMENT	TYPE	ALGORITHM	TENSION
T_7	Straight	$T_7 = LW_t \underline{K} + T_6$	
		$= (16.54)(2.13)(0.36) + 7.23$	$= 19.91$
T_8	Vert bend (30°)	$T_8 = T_7 e^{\mu b}$	
		$= 19.91 e^{(0.36)(0.52)}$	$= 24.01$
T_9	Down slope (25)	$T_9 = LW_t (\underline{K} \cos a - \sin a) + T_8$	
		$= (5.17)(2.13)(0.36 \cos 25° - \sin 25°) + 24.01$	$= 23.36$
T_{10}	Vert bend (30°)	$T_{10} = T_9 e^{\mu b}$	
		$= 23.36 e^{(0.36)(0.52)}$	$= 28.17$
T_{11}	Straight	$T_{11} = LW_t \underline{K} + T_{10}$	
		$= (4.04)(2.13)(0.36) + 28.17$	$= 31.31$
T_{12}	Vert bend (90°)	$T_{12} = T_{11} e^{\mu b}$	
		$= 31.31 e^{(0.36)(1.57)}$	$= 55.10$
T_{13}	Up slope (90°)	$T_{13} = LW_t + T_{12}$	
		$= (5.21)(2.13) + 55.10$	$= 61.93$

$$SWP = \frac{1}{3}\left[3W_e - 2\right]\left[\frac{T}{R}\right] \quad @\ T_{12} \quad R = 16''$$

$$= \frac{1}{3}\left[3(1.19) - 2\right]\left[\frac{55.10}{1.165}\right] = \underline{\underline{24.75\ \frac{lb}{ft}}}$$

TOTAL BENDS = 260°

TVA 11030 (WM 7-75)

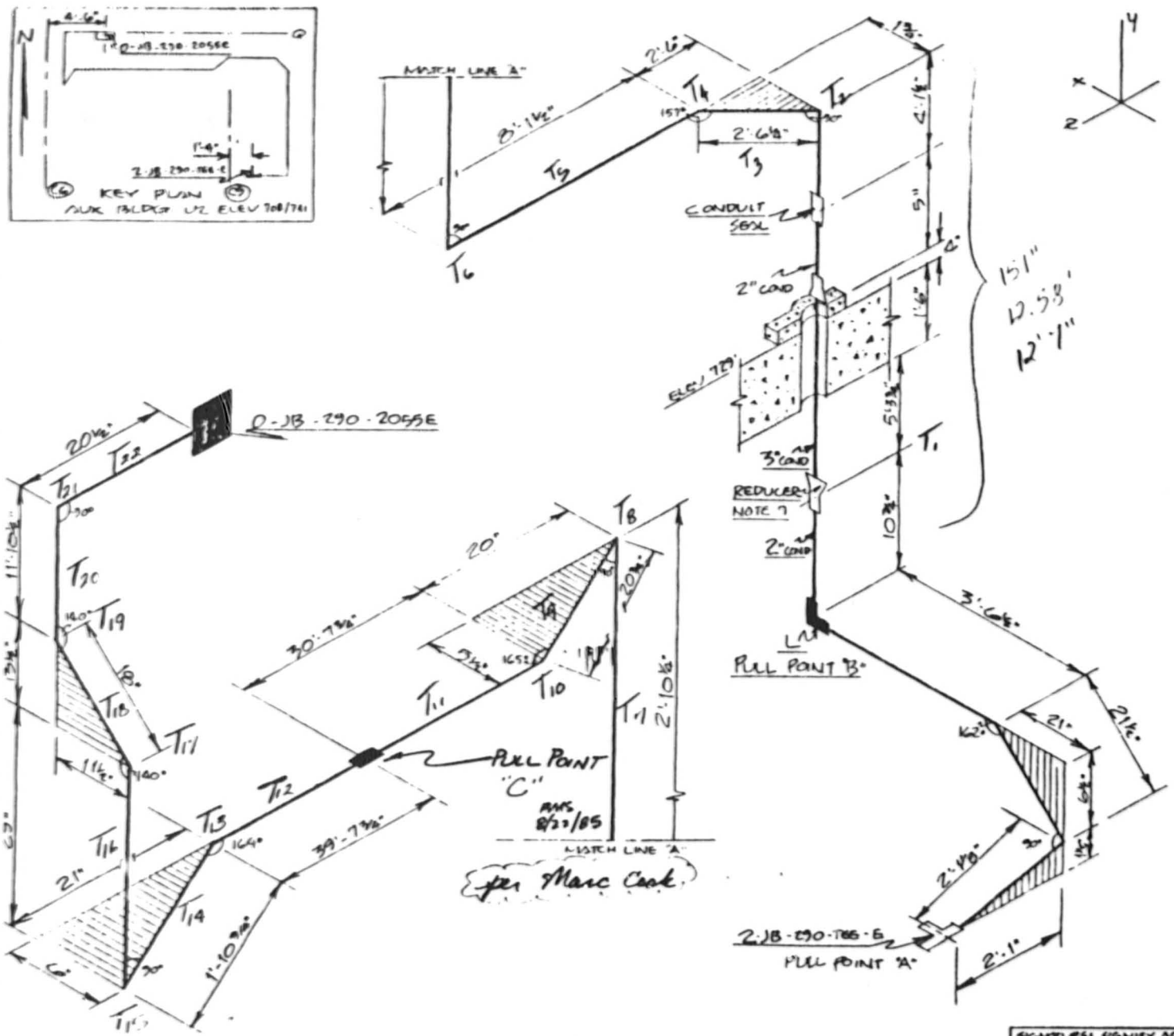

NOTES:

1. ALL BENDS HAVE A BEND RADIUS OF 9½" UNLESS OTHERWISE NOTED. (21)
2. TOLERANCES AS SPECIFIED BY E.P. 22.29
3. ALL BENDS NOT SPECIFIED ARE 90°
4.

CABLE UNIDS	MANUFACTURER
2PV125E	LATER
128E	LATER
135E	LATER

5. REFERENCE DWG # 45W814-2,6,7,8,9,10,11
6. ALL DIMENSIONS ℄ TO ℄.
7. 2" CONDUITS RUNS FROM P.P. "B" TO REDUCER. 3" COND STARTS AT REDUCER AND RUNS THROUGH PENETRATION. 2" COND. THEN BEGINS AGAIN AND CONTINUES.

CONTROL BUILDING - UNIT 2

RACEWAY ISOMETRIC DRAWING
ELEV. 708/741 CONDUIT NO 2PV-0825E

WATTS BAR NUCLEAR PLANT - TVA OC

ENGINEER	VERIFICATION	APPROVED
Marc Cook	J.W. [illegible]	[illegible]

DATE	DRAWING NUMBER
8/20/85	N/A EEB - EP - 22, 29 SAMPLE PROGRAM

SIGNATURES SIGNIFY ACCEPTANCE AS WORSE CASE - ONLY NOT DIMENSIONAL VERIFICATION.

OR

G.W. [illegible]

CONDUIT 2PV-C82SE 2I [From pull point B to C]
CABLES 2PV 12SE 1-2/C #10 (WLN) 0.200 lb/ft O.D. = 0.492 in.
[V3] 12BE 1-2/C #10 (WLN) 0.200 lb/ft COMPUTED AMS DATE 8/22/85
13SE 2-1/C #6 (WDE-1) 0.115 lb/ft CHECKED JRB DATE 8-27-85

$$W_t = (0.200)(2) + (0.115)(2) = 0.63$$

$W_c = 1.4$ due to different diameter cables

$$\underline{K} = K W_c$$
$$= (0.3)(1.4)$$
$$= 0.42$$

NOTE: For purposes of this calculation, as a worst-case basis, assume the entire conduit run from pull point B to C is 2I. This does not take credit for the 3I section at the El. 729 sleeve.

SEGMENT	TYPE	ALGORITHM	TENSION
T_1	Up slope (90°)	$T_1 = LW_t(\cancel{\sin 90°}^{1} + \cancel{K \cos 90°}^{0}) + \cancel{T_{in}}^{0}$	
		$= (12.58)(0.63)$	$= 7.93$ lb.
T_2	Horiz bend (90°)	$T_2 = T_1 e^{\underline{K}b}$	
		$= 7.93 e^{(0.42)(1.57)}$	$= 15.33$
T_3	Straight	$T_3 = LW_t \underline{K} + T_2$	
		$= (2.52)(0.63)(0.42) + 15.33 =$	15.99

COMPUTED RMS DATE 8/22/85
CHECKED JRB DATE 8-24-85

SEGMENT	TYPE	ALGORITHM	TENSION
T_4	Horiz bend (23°)	$T_4 = T_3 e^{\underline{K}b}$	
		$= 15.99\, e^{(0.42)(0.40)}$	$= 18.92$
T_5	Straight	$T_5 = LW_t \underline{K} + T_4$	
		$= (8.13)(0.63)(0.42) + 18.92$	$= 21.07$
T_6	Vert bend (90°)	$T_6 = T_5 e^{\underline{K}b}$	
		$= 21.07\, e^{(0.42)(1.57)}$	$= 40.75$
T_7	Up slope (90°)	$T_7 = LW_t + T_6$	
		$= (2.85)(0.63) + 40.75$	$= 42.54$
T_8	Vert bend (90°)	$T_8 = T_7 e^{\underline{K}b}$	
		$= 42.54\, e^{(0.42)(1.57)}$	$= 82.26$
T_9	Straight	$T_9 = LW_t \underline{K} + T_8$	
		$= (1.73)(0.63)(0.42) + 82.26$	$= 82.72$
T_{10}	Horiz bend (15°)	$T_{10} = T_9 e^{\underline{K}b}$	
		$= 82.72\, e^{(0.42)(0.26)}$	$= 92.26$
T_{11}	Straight	$T_{11} = LW_t \underline{K} + T_{10}$	
		$= (30.65)(0.63)(0.42) + 92.26$	$= \underline{\underline{100.37}}$

TVA 11030 (WM-7-75)

COMPUTED AMS DATE 8/22/85
CHECKED JRB DATE 8-24-85

$$SWP = \left(\frac{1}{3}\right)(3W_c - 2)\left(\frac{T}{R}\right) \qquad @\ T_{10} \quad R = 9\tfrac{1}{2}''$$

$@\ T_{10}$: $R = 9\tfrac{1}{2}''$

$$SWP = \left(\frac{1}{3}\right)(3(1.4) - 2)\left(\frac{92.26}{.705}\right)$$

$$= \underline{\underline{95.97\ \frac{lb}{ft}}}$$

TOTAL BENDS = 308°

CONDUIT 2PV-0825E [From pull point C to JB]

COMPUTED RMS DATE 8/22/85
CHECKED JRB DATE 8-24-85

$W_l = 0.63 \frac{lb}{ft}$

$W_c = 1.4$

$\underline{K} = (0.3)(1.4) = 0.42$

SEGMENT	TYPE	ALGORITHM	TENSION
T_{12}	Straight	$T_{12} = LW_l\underline{K} + \cancel{T_{11}}^{0}$	
		$= (39.65)(0.63)(0.42)$	$= 10.49$
T_{13}	Horiz bend (16°)	$T_{13} = T_{12}e^{\underline{K}b}$	
		$= 10.49e^{(0.42)(0.28)}$	$= 11.80$
T_{14}	Straight	$T_{14} = LW_l\underline{K} + T_{13}$	
		$= (1.90)(0.63)(0.42) + 11.80$	$= 12.30$
T_{15}	Vert bend (90°)	$T_{15} = T_{14}e^{\underline{K}b}$	
		$= 12.30e^{(0.42)(1.57)}$	$= 23.79$
T_{16}	Up slope (90°)	$T_{16} = W_l L(\cancel{\sin a}^{1} + \cancel{\underline{K}\cos a}^{0}) + T_{15}$	
		$= (0.63)(2.42) + 23.79$	$= 25.31$
T_{17}	Vert bend (40°)	$T_{17} = T_{16}e^{\underline{K}b}$	
		$= 25.31e^{(0.42)(0.70)}$	$= 33.97$
T_{18}	Up slope (50°)	$T_{18} = W_l L(\sin a + \underline{K}\cos a) + T_{17}$	
		$= (0.63)(1.5)(\sin 50° + 0.42\cos 50°) + 33.97$	$= 34.95$

TVA 11030 (WM 7-75)

COMPUTED BMS DATE 8/23/85
CHECKED JRB DATE 8-24-85

SEGMENT	TYPE	ALGORITHM	TENSION
T_{19}	Vert bend (40°)	$T_{19} = T_{18} e^{\mu b}$	
		$= 34.95 e^{(0.42)(0.70)}$	$= 46.89$
T_{20}	Up slope (90°)	$T_{20} = W_t L + T_{21}$	
		$= (0.63)(11.88) + 46.89$	$= 54.37$
T_{21}	Vert bend (90°)	$T_{21} = T_{20} e^{\mu b}$	
		$= 54.37 e^{(0.42)(1.57)}$	$= 105.14$
T_{22}	Straight	$T_{22} = L W_t \underline{K} + T_{21}$	
		$= (1.71)(0.63)(0.42) + 105.14$	
		$= 105.59$	

$$SWP = \left(\frac{1}{3}\right)(3W_c - 2)\left(\frac{T}{R}\right) \quad @\ T_{21}\ (90°)$$

$R = 9\frac{1}{2}''$

$$= \left(\frac{1}{3}\right)(3(1.4) - 2)\left(\frac{105.14}{.705}\right)$$

$$= \underline{\underline{109.37\ \frac{lb}{ft}}}$$

TOTAL BENDS = 276°

TVA 11030 (WM-7-75)

TVA 488 (EN DES 3-77)

CONDUIT 2PV0825E

SHEET 1 OF 4

$w_1 = .63$ $K = .42$ $w_1 = 1.4$

COMPUTED KTS DATE 9-20-85

CHECKED JRB DATE 9-25-85

$\frac{w_1 K}{1+K^2} = \frac{(.63)(.74)}{1+.42^2} = .424$

$1 - K^2 w_1^2 = 1 - (.42)^2(1.4)^2 = .654$

Calculated using long form of vertical bend equations

pull B → C

T_1 Vertical 12'-7" $T = 12.58 \times .63 = 7.93$

T_2 Vert Bend 90° (A) $e^{\mu b} = 1.934$

$T = 7.93 \times 1.93 + .424\,[2(.42)(1.93)(1) + .654]$

$T = 15.34 + .96$

$T = 16.30$

T_3 Horizontal 2'-6¼" $T = 16.30 + (2.52)(.63)(.42) =$

$T = 16.96$

T_4 Horiz Bend 23° $T = 16.96\, e^{(.42)(.4)} = 20.08$

T_5 Horizontal 8'-1½" $T = 20.08 + (8.13)(.63)(.42)$

$T = 22.23$

T_6 Vert Bend 90° (D) $e^{\mu b} = 1.934$

$T = 22.23 \times 1.934 - .424\,[2(.42) - .654 \times 1.934]$

$T = 42.99 - .424\,(.84 - 1.266)$

$T = 42.99 + .18$

$T = 43.17$

T_7 Vertical 2'-10¼" $T = 43.17 + (2.85)(.63) = 44.97$

T_8 Vert Bend 90° (A)

$T = 44.97 \times 1.934 + .424\,[2(.42)(1.934) + .654]$

$T = 86.99 + .97$

$T = 87.96$

TVA 488 (EN DES 3 77)

2PV0825

COMPUTED KTS DATE 9-20-85

CHECKED JRB DATE 9-25-85

T_9 Horizontal $20\frac{3}{4}''$ $T = 87.96 + (1.73)(.63)(.42) = 88.41$

T_{10} Horiz bend $15°$ $T = 88.41 e^{(.42)(.26)} = 98.69$

T_{11} Horizontal $30' \cdot 7\frac{3}{4}''$ $T = 98.69 + (30.65)(.63)(.42)$

$T = 106.80$

$SWP = \frac{1}{2}(3 \times 1.4 - 2) \frac{98.69}{.705} = 102.66$

TVA 488 (EN DES 3-77)

2PV0825E

SHEET 3 OF 4

$w_t = .63 \quad w_t = 1.4 \quad k = .42$

COMPUTED KTS DATE 9-20-85

CHECKED JRB DATE 9-25-85

$\frac{w_t R}{1+k^2} = .424 \qquad 1 - k^2 w_t^2 = .654$

pull C → EJB

T_1 Horizontal 39'-7¾" $\quad T = 39.65 \times .63 \times .42 = 10.49$

T_2 Horiz Bend 16° $\quad T = 10.49\, e^{(.42)(.28)} = 11.80$

T_3 Horizontal 1'-10¾" $\quad T = 11.80 + 1.90 \times .63 \times .42 = 12.30$

T_4 Vert Bend (D) 90°

$T = 12.30 \times 1.934 - .424[2(.42) - .654(1.934)]$

$T = 23.79 + .180$

$T = 23.97$

T_5 Vertical 29" $\quad T = 23.97 + \frac{29}{12} \times .63 = 25.49$

T_6 Vert Bend 40° (A) $\quad e^{kb} = 1.341$

$T = 25.49 \times 1.341 + .424[2(.42)(1.341)(.643) + (.654)(1 - 1.341 \times .766)]$

$= 34.175 + .424[.724 - .018]$

$= 34.18 + .30$

$= 34.48$

T_7 Straight run 18" $\quad T = 34.48 + (1.5)(.63)(.42 \cos 50 + \sin 50)$

slope up 50° $\quad T = 35.45$

T_8 Vert Bend 40° (D)

$T = 35.45 \times 1.341 - .424[2(.42)(.643) - .654(1.341 - .766)]$

$= 47.534 - .066$

$= 47.47$

T_9 Vertical 11'-10½" $\quad T = 47.47 + (11.88)(.63) = 54.95$

COMPUTED KTS DATE 9-20-85

CHECKED JRB DATE 9-25-85

T_{10} Vert Bend 90° (A)

$T = 54.95(1.534) + .424[2(.42)(1.534) + .654]$

$T = 106.27 + .97$

$T = 107.24$

T_{11} Horizontal 20½" $T = 107.24 + (1.71)(.63)(.42)$

$T = 107.70$

$SWP = \frac{1}{3}(3 \times 1.4 - 2)\ \frac{107.24}{.705} = 111.55$

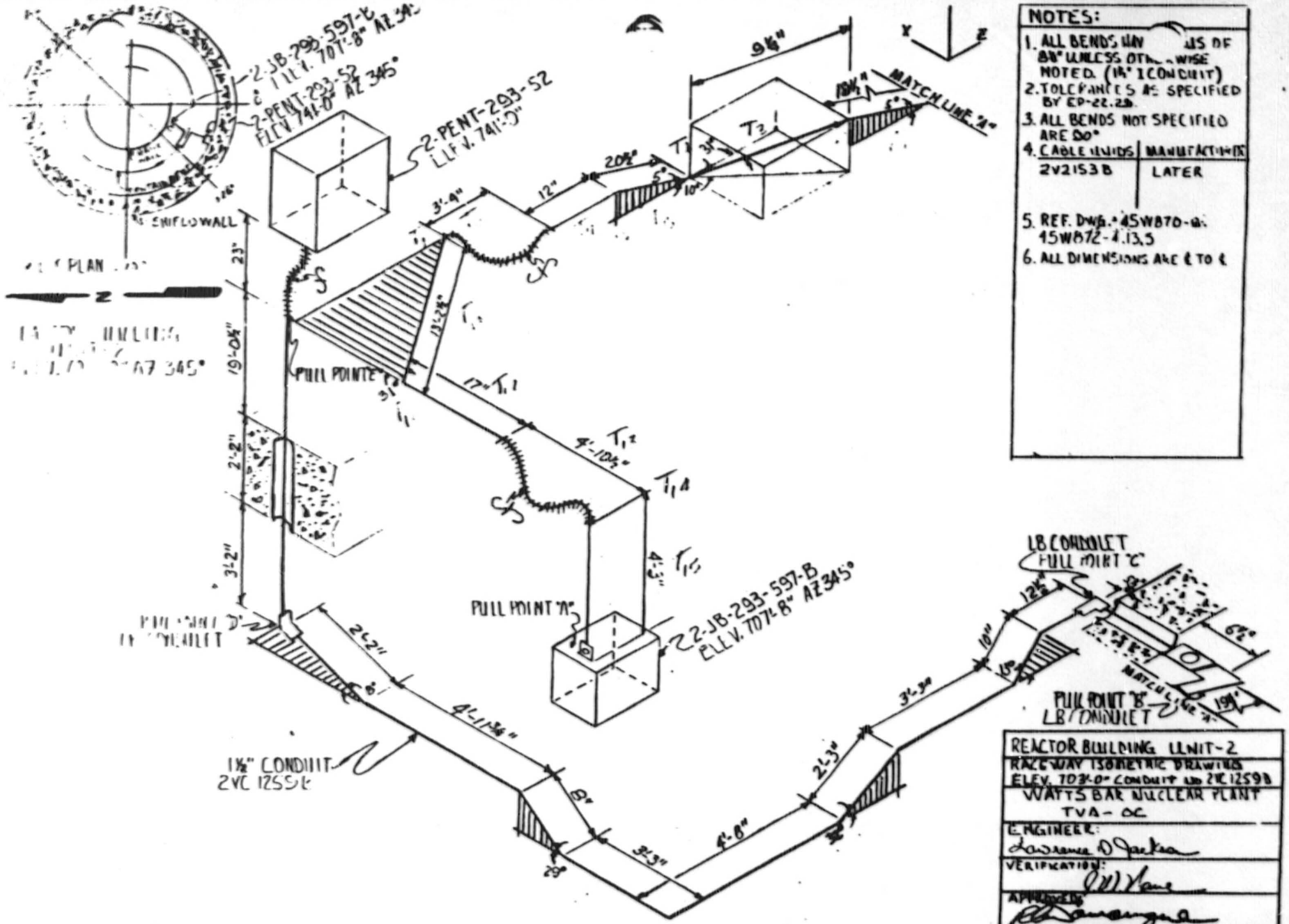

NOTES:

1. ALL BENDS HAV[illegible]US OF 8½" UNLESS OTH[illegible]WISE NOTED. (1½" I CONDUIT)
2. TOLERANCES AS SPECIFIED BY EP-22.29.
3. ALL BENDS NOT SPECIFIED ARE 90°
4. CABLE UNIDS | MANUFACTURER
   2V2153B | LATER
5. REF. DWG. 45W870-[illegible] 45W872-4.13.5
6. ALL DIMENSIONS ARE ℄ TO ℄

REACTOR BUILDING UNIT-2
RACEWAY ISOMETRIC DRAWING
ELEV. 703'-0" CONDUIT NO 2VC1259B
WATTS BAR NUCLEAR PLANT
TVA-OC

ENGINEER: Lawrence D Jackson

VERIFICATION: [signature]

APPROVED: [signature]

DATE 8-24-85 | DRAWING NO. NA CEB-EP-22.29 SAMPLE PROGRAM

REB QA SIGNATURES SIGNIFY ACCEPTANCE TO "WORSE CASE" CRITERIA

OE [signature] | QA

CONDUIT 2VC1259B $1\frac{1}{2}$ I D = 1.61 FROM pull point B to A
CABLE 2V2153B 10-1/C #14 WPA
[V3]

COMPUTED RMS DATE 8/29/85
CHECKED JRB DATE 8-30-85

$W_t = (10)(.018) = 0.48$

$W_c = 1.4$

$\underline{K} = KW_c = (0.3)(1.4) = 0.42$

SEGMENT	TYPE	ALGORITHM	TENSION
T_1	Up slope (5°)	$T_1 = LW_t(\sin a + \underline{K}\cos a) + T_{in}^{0}$ $= (\frac{19.5}{12})(0.48)(\sin 5° + 0.42\cos 5°) = 0.39$	
T_2	Vert bend (31°)	$T_2 = T_1 e^{\underline{K}b}$ $= 0.39 e^{(0.42)(0.54)}$	$= 0.49$
T_3	Down slope (10°)	$T_3 = LW_t(\underline{K}\cos a - \sin a) + T_2$ $= (\frac{9.25}{12})(0.48)(0.42\cos 10° - \sin 10°) + 0.49$	$= 0.58$
T_4	Vert bend (31°)	$T_4 = T_3 e^{\underline{K}b}$ $= 0.58 e^{(0.42)(0.54)}$	$= 0.73$
T_5	Up slope (5°)	$T_5 = LW_t(\sin a + \underline{K}\cos a) + T_4$ $= (\frac{20.5}{12})(0.48)(\sin 5° + 0.42\cos 5°) + 0.73$	$= 1.15$
T_6	Vert bend (5°)	$T_6 = T_5 e^{\underline{K}b}$ $= 1.15 e^{(0.42)(0.09)}$	$= 1.19$

TVA 11030 (WM 7-75)

COMPUTED AMS DATE 8/29/85
CHECKED JRB DATE 8-30-85

SEGMENT	TYPE	ALGORITHM	TENSION
T_7	Straight	$T_7 = LW_t \underline{K} + T_6$ $= (1)(0.48)(0.42) + 1.19$	$= 1.42$
T_8	Straight (Flex)	$T_8 = LW_t \underline{K} + T_7$ $= (2.33)(0.48)(0.42) + 1.42$	$= 2.10$
T_9	Horiz bend (59°)	$T_9 = T_8 e^{\underline{K}b}$ $= 2.10 e^{(0.42)(1.03)}$	$= 3.23$
T_{10}	Straight	$T_{10} = LW_t \underline{K} + T_9$ $= (13.21)(0.48)(0.42) + 3.23$	$= 5.89$
T_{11}	Horiz bend (59°)	$T_{11} = T_{10} e^{\underline{K}b}$ $= 5.89 e^{(0.42)(1.03)}$	$= 9.08$
T_{12}	Straight	$T_{12} = LW_t \underline{K} + T_{11}$ $= (\frac{17}{12})(0.48)(0.42) + 9.08$	$= 9.37$
T_{13}	Straight (Flex)	$T_{13} = LW_t \underline{K} + T_{12}$ $= (4.88)(0.48)(0.42) + 9.37$	$= 10.35$
T_{14}	Vert bend (90°)	$T_{14} = T_{13} e^{\underline{K}b}$ $= 10.35 e^{(0.42)(1.57)}$	$= 20.02$

TVA 11030 (WM 7-7-)

COMPUTED RMS DATE 8/29/85
CHECKED JRB DATE 8-30-85

SEGMENT	TYPE	ALGORITHM	TENSION
T_{15}	Down slope (90°)	$T_{15} = -LW_t + T_{14}$	

$$= -(9.25)(0.48) + 20.02 = 17.48$$

$$SWP = x\left[\frac{T}{R}\right] \qquad @\ T_{14} \qquad R = 8\tfrac{1}{4}''$$

$$= .42\left[\frac{20.02}{.620}\right]$$

$$= 13.56\ \frac{lb}{ft}$$

TOTAL BENDS = 275°

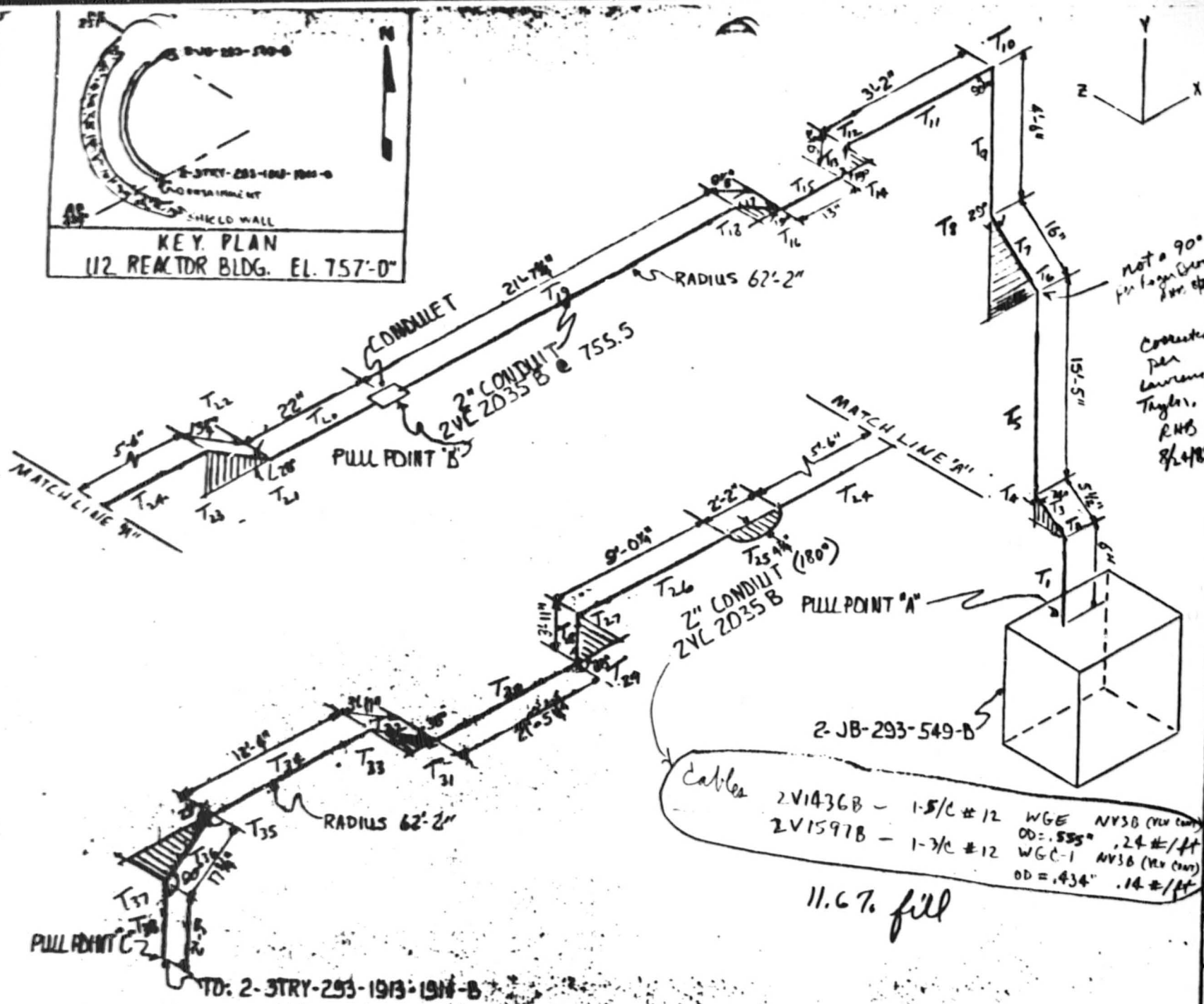

NOTES:

1. ALL BENDS HAVE RADIUS OF 9½" UNLESS OTHERWISE NOTED (2" I COND)
2. TOLERANCES AS SPECIFIED BY EP 22.29
3. ALL BENDS NOT SPECIFIED ARE 90°
4. CABLE UNIT | MANUFACTURER
   ~~2A5816~~ | LATER
   ~~2A6210~~ | LATER
   2V1436B | NV3B
   2V1597B | Valve Control
5. REF. DWG # 45WA74-4
6. ALL DIMENSIONS ℄ TO ℄

$W_t = .24 + .14 = .38$

1I - ~~2VC~~ 2031B ?

AUXILIARY BUILDING UNIT-2

RACEWAY ISOMETRIC DRAWING COND. # 2VC 2035B

WATTS BAR NUCLEAR PLANT TVA-OC

ENGINEER X302 or 306 Lawrence Jackson

VERIFICATION J.W. Hane

APPROVED

DATE	DRAWING NO.
8-21-85	NA EEB-EP-22.29 SAMPLE PROGRAM

OE & QA SIGNATURES SIGNIFY ACCEPTANCE TO WORSE CASE CRITERIA.

OE	QA

CONDUIT 2VC-2035B (Two cables) SHEET 1 OF 6

D/d : 2.07/.555 = 3.73 > 2.5 ⇒ cradle formation

K = .3, W_t = .24 + .14 = .38, W_c = 1.4 (from App. E of G38)

$\underline{K} = W_c K = 1.4 \times .3 = .42$

COMPUTED RHB DATE 8-29-85

CHECKED JRB DATE 9-5-85

PULL A to B (256°)

T_1 Vertical Straight (Up) $T = LW_t = .5 \times .38$
$= .19\#$

T_2 Vertical Bend (74°) $T = T_1 e^{\underline{K}b} = .19\, e^{.42 \times 1.29} = .19 \times 1.72$
$= .33\ \#$

T_3 Up Ramp (16°) $T = LW_t (\sin\alpha + \underline{K}\cos\alpha) + T_2$
$= \frac{5.5}{12} \times .38 (\sin 16° + .42 \cos 16°) + .33$
$= .45\#$

T_4 Vertical Bend (74°) $T = T_3 e^{\underline{K}b} = .45\, e^{.42 \times 1.29} = .45 \times 1.72$
$= .77\#$

T_5 Vertical Straight (Up) $T = LW_t + T_4 = \left(15 + \frac{5}{12}\right) \times .38 + .77$
$= 6.62\#$

T_6 Vertical Bend (29°) $T = T_5 e^{\underline{K}b} = 6.62\, e^{.42 \times .51} = 6.62 \times 1.24$
$= 8.19\ \#$

T_7 Up Ramp (61°) $T = LW_t (\sin\alpha + \underline{K}\cos\alpha) + T_6$
$= \frac{16}{12} \times .38 (\sin 61° + .42 \cos 61°) + 8.19$
$= 8.74\#$

T_8 Vertical Bend (29°) $T = T_7 e^{\underline{K}b} = 8.74 e^{.42 \times .51} = 8.74 \times 1.24$
$= 10.81\#$

T_9 Vertical Straight (Up) $T = LW_t + T_8 = 4.5 \times .38 + 10.81$
$= 12.52\#$

T_{10} Vertical Bend (90°) $T = T_9 e^{\underline{K}b} = 12.52 e^{.42 \times \pi/2} = 12.52 \times 1.93$
$= 24.22\ \#$

T_{11} Horizontal Straight $T = \underline{K} LW_t + T_{10} = .42 \times \left(3 + \frac{2}{12}\right) \times .38 + 24.22$
$= 24.72\#$

TVA 11030 (WM-7-75)

COMPUTED RHD DATE 8-29-85
CHECKED JRB DATE 9-5-85

T_{12} Horiz. Bend (19°) $T = T_{11} e^{\underline{K}b} = 24.72 e^{.42 \times .33} = 24.72 \times 1.15$
$= 28.42\#$

T_{13} Horiz. Straight $T = \underline{K} L W_t + T_{12} = .42 \times \frac{9\frac{1}{8}}{12} \times .38 + 24.82$
$= 28.54\#$

T_{14} Horiz. Bend (19°) $T = T_{13} e^{\underline{K}b} = 28.54\, e^{.42 \times .33} = 28.54 \times 1.15$
$= 32.80\#$

T_{15} Horiz. Straight $T = \underline{K} L W_t + T_{14} = .42 \times \frac{13}{12} \times .38 + 32.80$
$= 32.98\#$

T_{16} Horiz. Bend (19°) $T = T_{15} e^{\underline{K}b} = 32.98\, e^{.42 \times .33} = 32.98 \times 1.15$
$= 37.90\#$

T_{17} Horiz. Straight $T = \underline{K} L W_t + T_{16} = .42 \times \frac{9\frac{1}{8}}{12} \times .38 + 37.9$
$= 38.02\#$

T_{18} Horiz. Bend (19°) $T = T_{17} e^{\underline{K}b} = 38.02\, e^{.42 \times .33} = 38.02 \times 1.15$
$= 43.71\#$

T_{19} Horiz. Straight $T = \underline{K} L W_t + T_{18} = .42 \times \left(21 + \frac{7.75}{12}\right) \times .38 + 43.71$
$= 47.16\#$

$$SWP_{AB} = W_c T_{18} / 2R = \frac{1.4 \times 43.71}{2 \times 0.705}$$

$$\boxed{SWP_{AB} = 43.40\ \#/ft}$$

TVA 11030 (WM-7-75)

COMPUTED RHB DATE 8-29-85
CHECKED JRB DATE 9-5-85

PULL B to C [501° (includes 180° saddle)]

T_{20} Horiz. Straight $T = \underline{K} L W_t = .42 \times \frac{22}{12} \times .38$
$= .29$ #

T_{21} Vertical Bend (28°) $T = T_{20} e^{\underline{K}b} = .29\, e^{.42 \times .49} = .29 \times 1.23$
$= .36$ #

T_{22} Up Ramp (28°) $T = L W_t (\sin\alpha + \underline{K} \cos\alpha) + T_{21}$
$= \frac{13.25}{12} \times .38 (\sin 28° + .42 \cos 28°) + .36$
$= .71$ #

T_{23} Vertical Bend (28°) $T = T_{22} e^{\underline{K}b} = .71\, e^{.42 \times .49} = .71 \times 1.23$
$= .87$ #

T_{24} Horiz. Straight $T = \underline{K} L W_t + T_{23} = .42 \times 5.5 \times .38 + .87$
$= 1.75$ #

T_{25} Horiz. Bend (180° Saddle) $T = T_{24} e^{\underline{K}b} = 1.75\, e^{.42 \times \pi} = 1.75 \times 3.74$
$= 6.55$ #

T_{26} Horiz. Straight $T = \underline{K} L W_t + T_{25} = .42 \times (9 + \frac{.25}{12}) \times .38 + 6.55$
$= 7.99$ #

T_{27} Horiz. Bend (38°) $T = T_{26} e^{\underline{K}b} = 7.99\, e^{.42 \times .66} = 7.99 \times 1.32$
$= 10.56$ #

T_{28} Horiz. Straight $T = \underline{K} L W_t + T_{27} = .42 \times (3 + \frac{11}{12}) \times .38 + 10.56$
$= 11.19$ #

T_{29} Horiz. Bend (38°) $T = T_{28} e^{\underline{K}b} = 11.19\, e^{.42 \times .66} = 11.19 \times 1.32$
$= 14.78$ #

T_{30} Horiz. Straight $T = \underline{K} L W_t + T_{29} = .42 \times (21 + \frac{5.25}{12}) \times .38 + 14.78$
$= 18.20$ #

T_{31} Horiz. Bend (38°) $T = T_{30} e^{\underline{K}b} = 18.20\, e^{.42 \times .66} = 18.20 \times 1.32$

TVA 11030 (WM-7-75)

COMPUTED RHG DATE 8-29-85
CHECKED JRB DATE 9-5-85

T_{32} Horiz. Straight $T = \underline{K} L W_t + T_{31} = .42 \times \left(3 + \frac{11}{12}\right) \times .38 + 24.05$
$= 24.67$ #

T_{33} Horiz. Bend (38°) $T = T_{32} e^{\underline{K} b} = 24.67 e^{.42 \times .66} = 24.67 \times 1.32$
$= 32.60$ #

T_{34} Horiz. Straight $T = \underline{K} L W_t + T_{33} = .42 \times \left(12 + \frac{4}{12}\right) \times .38 + 32.6$
$= 34.57$ #

T_{35} Horiz. Bend (23°) $T = T_{34} e^{\underline{K} b} = 34.57 e^{.42 \times .40} = 34.57 \times 1.18$
$= 40.92$ #

T_{36} Horiz. Straight $T = \underline{K} L W_t + T_{35} = .42 \times \left(\frac{17.75}{12}\right) \times .38 + 40.92$
$T = 41.15$ #

T_{37} Vertical Bend (90°) $T = T_{36} e^{\underline{K} b} = 41.15 e^{.42 \pi/2} = 41.15 \times 1.93$
$= 79.60$ #

T_{38} Vertical Straight (Down) $T = T_{37} - L W_t = 79.6 - 2.25 \times .38$
$= 78.74$ #

$SWP_{BC} = W_c T_{37} / 2R = \frac{1.4 \times 79.6}{2 \times 0.705}$

$\boxed{SWP_{BC} = 79.04 \text{ \#/ft}}$

TVA 11030 (WM 7-75)

COMPUTED RHL DATE 8-29-85
CHECKED JRB DATE 9-5-85

FULL CHR

T_{38} Vertical Straight (Up) $T = LW_t = 2.25 \times .38$
$= .86$ #

T_{37} Vertical Bend (90°) $T = T_{38} e^{\mu b} = .86\, e^{.42 \times \pi/2} = .86 \times 1.93$
$= 1.65$ #

T_{36} Horiz. Straight $T = \underline{k} LW_t + T_{37} = .42 \times \left(\frac{17.75}{12}\right) \times .38 + 1.65$
$= 1.89$ #

T_{35} Horiz. Bend (23°) $T = T_{36} e^{\mu b} = 1.89\, e^{.42 \times .40} = 1.89 \times 1.18$
$= 2.24$ #

T_{34} Horiz. Straight $T = \underline{k} LW_t + T_{35} = .42 \times \left(12 + \frac{4}{12}\right) \times .38 + 2.24$
$= 4.21$ #

T_{33} Horiz. Bend (38°) $T = T_3 e^{\mu b} = 4.21\, e^{.42 \times .66} = 4.21 \times 1.32$
$= 5.56$ #

T_{32} Horiz. Straight $T = \underline{k} LW_t + T_{33} = .42 \times \left(3 + \frac{11}{12}\right) \times .38 + 5.56$
$= 6.18$ #

T_{31} Horiz. Bend (38°) $T = T_{32} e^{\mu b} = 6.18\, e^{.42 \times .66} = 6.18 \times 1.32$
$= 8.17$ #

T_{30} Horiz. Straight $T = \underline{k} LW_t + T_{31} = .42 \times \left(21 + \frac{5.25}{12}\right) \times .38 + 8.17$
$= 11.59$ #

T_{29} Horiz. Bend (38°) $T = T_{30} e^{\mu b} = 11.59\, e^{.42 \times .66} = 11.59 \times 1.32$
$= 15.31$ #

T_{28} Horiz. Straight $T = \underline{k} LW_t + T_{29} = .42 \times \left(3 + \frac{11}{12}\right) \times .38 + 15.31$
$= 15.94$ #

T_{27} Horiz. Bend (38°) $T = T_{28} e^{\mu b} = 10.8\, e^{.42 \times .66} = 15.94 \times 1.32$
$= 21.05$ #

TVA 11060 (WBN / PS)

COMPUTED RHB DATE 8-29-85
CHECKED JRB DATE 9-5-85

T_{26} : Horiz. Straight $T = \underline{K} L W_t + T_{27} = .42 \times \left(\frac{0.25}{12} + 9\right) \times .38 + 21.0$
$= 22.49\#$

T_{25} Horiz. Bend (180° saddle) $T = T_{26} e^{\underline{K}b} = 22.49 e^{.42\pi} = 22.49 \times 3.74$
$= 84.16\#$

T_{24} Horiz. Straight $T = \underline{K} L W_t + T_{25} = .42 \times 5.5 \times .38 + 84.$
$= 85.04\#$

T_{23} Vertical Bend (28°) $T = T_{24} e^{\underline{K}b} = 85.04 e^{.42 \times .49} = 85.04 \times 1.23$
$= 104.41\#$

T_{22} Down Ramp (28°) $T = L W_t (\underline{K} \cos\alpha - \sin\alpha) + T_{23}$
$= \frac{13.25}{12} \times .38 (.42 \cos 28° - \sin 28°) + 104.$
$= 104.37\#$

T_{21} Vertical Bend (28°) $T = T_{22} e^{\underline{K}b} = 104.37 e^{.42 \times .49} = 104.37 \times 1.23$
$= 128.15\#$

T_{20} Horiz. Straight $T = \underline{K} L W_t + T_{21} = .42 \times \frac{22}{12} \times .38 + 128.15$
$= 128.44\#$

$$SWP_{CC} = W_c T_{21} / 2R = \frac{1.4 \times 128.15}{2 \times 0.705}$$

$$\boxed{SWP_{CB} = 127.24\ \#/ft}$$ Worst Case!

<u>PULL B to A</u> is negligible due to long downward run.

TVA 11030 (WM 7-7-)

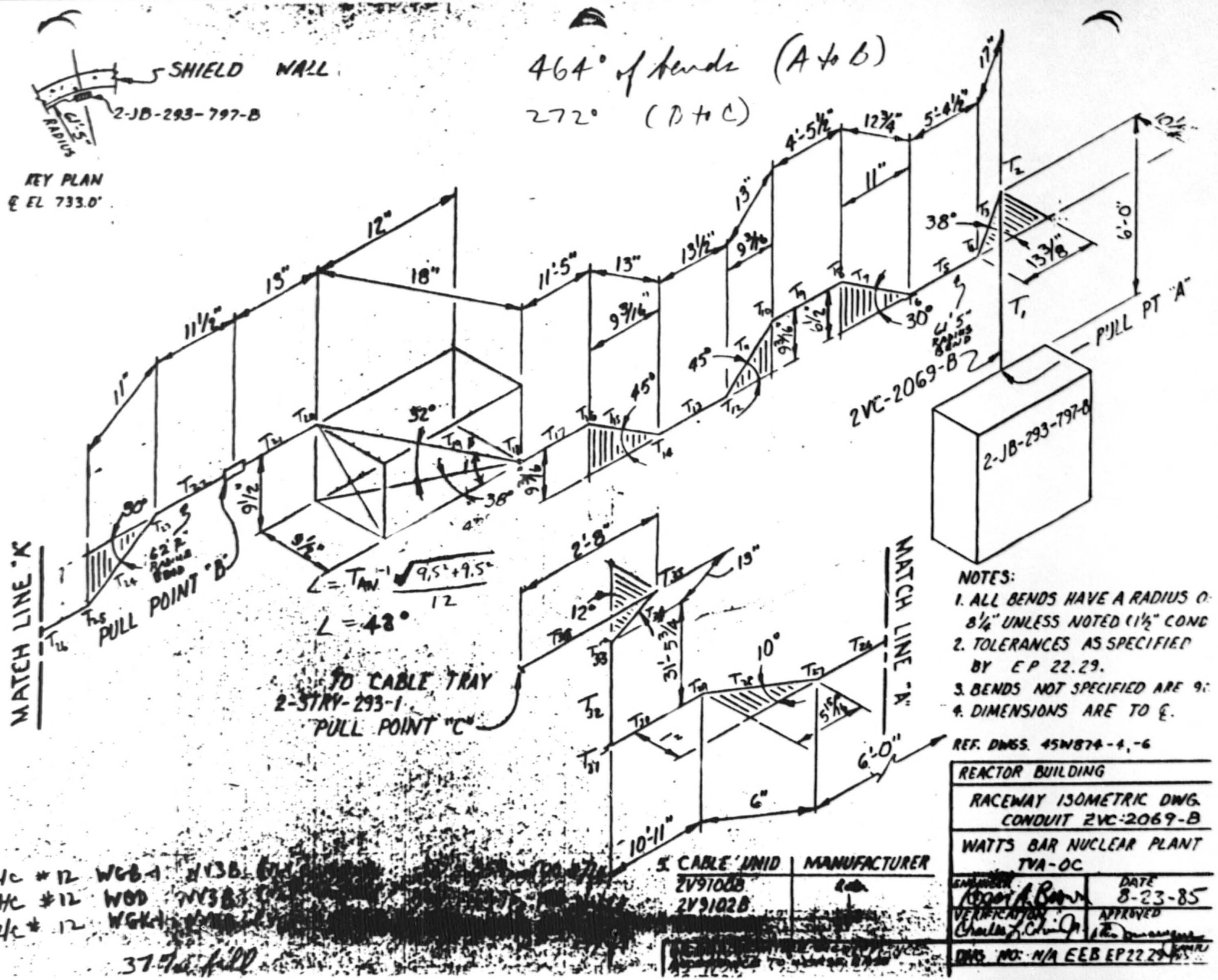
SHIELD WALL
2-JB-293-797-B
KEY PLAN
℄ EL 733.0'
464° of bends (A to B)
272° (B to C)
MATCH LINE "K"
PULL POINT "B"
PULL PT "A"
MATCH LINE "A"
2VC-2069-B
2-JB-293-797-B
TO CABLE TRAY
2-STRY-293-1
PULL POINT "C"
L = 48°
NOTES:
1. ALL BENDS HAVE A RADIUS O
8¼" UNLESS NOTED (1½" CONC
2. TOLERANCES AS SPECIFIED BY EP 22.29.
3. BENDS NOT SPECIFIED ARE 9
4. DIMENSIONS ARE TO ℄.
REF. DWGS. 45W874-4,-6
REACTOR BUILDING
RACEWAY ISOMETRIC DWG.
CONDUIT 2VC-2069-B
WATTS BAR NUCLEAR PLANT
TVA-OC
DATE 8-23-85
DWG. NO: N/A EEB EP22.29
CABLE UNID
MANUFACTURER
2V9106B
2V9102B
1-2/C #12 WGB-1
1-4/C #12 WOD
1-12/C # 12 WGK
37% fill

CONDUIT # 2VC-2069B
(3 Cables)

COMPUTED RHO DATE 8-24-85
CHECKED JRB DATE 8-27-85

$K = 0.3$
$W_t = .1 + .18 + .45 = .73$
$W_c = 1.4$
$\underline{K} = W_c K = 1.4 \times .3 = .42$

PULL A TO B

Tension #	Type	Calculation
T_1	Vertical Straight (Up)	$T = W_t L = .73 \times 6 = 4.38$ #
T_2	Vertical Bend (90°)	$T = T_1 e^{\underline{K}b} = 4.38\, e^{.42 \times \pi/2} = 4.38 \times 1.93 = 8.47$ #
T_3	Horiz. Straight	$T = \underline{K} L W_t + T_2 = .42 \times \frac{17}{12} \times .73 + 8.47 = 8.91$ #
T_4	Horiz. Bend (38°)	$T = T_3 e^{\underline{K}b} = 8.91\, e^{.42 \times .66} = 8.91 \times 1.32 = 11.77$ #
T_5	Horiz. Straight *	→ * Consider straight (actually a 5° arc) since radius is so large (61'-5") + arc is relatively short (5'-4½") $T = \underline{K} L W_t + T_4 = .42 \times 5.38 \times .73 + 11.77 = 13.42$ #
T_6	Vertical Bend (30°)	$T = T_5 e^{\underline{K}b} = 13.42 \times e^{.42 \times .52} = 13.42 \times 1.25 = 16.72$ #

TVA 11030 (WM-7-75)

COMPUTED RHH DATE 8-24-85
CHECKED JRB DATE 8-27-85

T_7 Up Ramp (30°)

$$T = W_t L (\sin\alpha + \underline{k} \cos\alpha) + T_6$$
$$= .73 \times \frac{12.75}{12} (\sin 30° + .42 \cos 30°) + 16.72$$
$$= 17.39 \#$$

T_8 Vertical Bend (30°)

$$T = T_7 e^{\underline{k}b} = 17.39 \times e^{.42 \times .52} = 17.39 \times 1.25$$
$$= 21.66 \#$$

T_9 Horiz. Straight

$$T = \underline{k} L W_t + T_8 = .42 \times 4.46 \times .73 + 21.66$$
$$= 23.03 \#$$

T_{10} Vertical Bend (45°)

$$T = T_9 e^{\underline{k}b} = 23.03 \times e^{.42 \pi/4} = 23.03 \times 1.39$$
$$= 32.03 \#$$

T_{11} Down Ramp (45°)

$$T = W_t L (\underline{k} \cos\alpha - \sin\alpha) + T_{10}$$
$$= .73 \times 1.08 (.42 \cos 45° - \sin 45°) + 32.03$$
$$= 31.70 \#$$

T_{12} Vertical Bend (45°)

$$T = T_{11} e^{\underline{k}b} = 31.7 \; e^{.42 \times \pi/4} = 31.7 \times 1.39$$
$$= 44.09 \#$$

T_{13} Horiz. Straight

$$T = \underline{k} L W_t + T_{12} = .42 \times \frac{13.5}{12} \times .73 + 44.09$$
$$= 44.44 \#$$

T_{14} Vertical Bend (45°)

$$T = T_{13} e^{\underline{k}b} = 44.44 \times e^{.42 \pi/4} = 44.44 \times 1.39$$
$$= 61.80 \#$$

TVA 11030 (WM-7-75)

COMPUTED RHB DATE 8-24-85
CHECKED JRB DATE 8-27-85

T_{15} Up Ramp (45°) $T = W_c L (\sin\alpha + \underline{K} \cos\alpha) + T_{14}$

$= .73 \times \frac{13}{12} (\sin 45° + .42 \cos 45°) + 61.8$

$= 62.60$ #

T_{16} Vertical Bend (45°) $T = T_{15} e^{\underline{K}b} = 62.6 \times e^{.42 \times \pi/4} = 62.6 \times 1.39$

$= 87.06$ #

T_{17} Horiz. Straight $T = \underline{K} L W_c + T_{16} = .42 \times 11.42 \times .73 + 87.06$

$= 90.56$ #

T_{18} Vertical Bend (48° skewed) $T = T_{17} e^{\underline{K}b} = 90.56\, e^{.42 \times .84} = 90.56 \times 1.42$

$= 128.75$ #

T_{19} Up Ramp (32°) $T = W_c L (\sin\alpha + \underline{K} \cos\alpha) + T_{18}$

$= .73 \times 1.5 (\sin 32° + .42 \cos 32°) + 128.75$

$= 129.72$ #

T_{20} Vertical Bend (48° skewed) $T = T_{19} e^{\underline{K}b} = 129.72\, e^{.42 \times .84} = 129.72 \times 1.42$

$= 184.42$ #

T_{21} Horizontal Straight $T = \underline{K} L W_c + T_{20} = .42 \times \frac{13}{12} \times .73 + 184.42$

$= 184.75$ #

$D/d = 1.61/.779 = 2.07 < 2.5 \Rightarrow$ Cables in triangular formation

$SWP_{AB} = W_c T_{20} / 2R = 1.4 \cdot 184.42 / 2 \times .62$

$\boxed{SWP_{AB} = 208.22 \text{ \#/ft}}$ Usual Case 1

TVA 11030 (WM-7-75)

COMPUTED RHH DATE 8-24-85
CHECKED JRB DATE 8-27-85

PULL B to A

$W_t = .1 + .18 + .45 = .73$ #/ft

T_{21} Horizontal Straight $T = \mu L W_t = .42 \times 13/12 \times .73$

$= 0.33$ #

T_{20} Vertical bend (48' skewed) $T = T_{21} e^{\mu b} = .33\ e^{.42 \times .84} = .33 \times 1.42$

$= .47$ #

T_{19} Down Ramp (32°) $T = W_t L (\mu \cos\alpha - \sin\alpha) + T_{20}$

$= .73 \times 1.5 (.42 \cos 32° - \sin 32°) + .47$

$= 0.28$ #

T_{18} Vertical Bend (48' skewed) $T = T_{19} e^{\mu b} = .28\ e^{.42 \times .84} = .28 \times 1.42$

$= 0.40$ #

T_{17} Horiz. Straight $T = \mu L W_t + T_{18} = .42 \times 11.42 \times .73 + .4$

$= 3.90$ #

T_{16} Vertical Bend (45°) $T = T_{17} e^{\mu b} = 3.9\ e^{.42 \times \pi/4} = 3.9 \times 1.39$

$= 5.43$ #

T_{15} Down Ramp (45°) $T = W_t L (\mu \cos\alpha - \sin\alpha) + T_{16}$

$= .73 \times 13/12 (.42 \cos 45° - \sin 45°) + 5.43$

$= 5.10$ #

T_{14} Vertical Bend (45°) $T = T_{15} e^{\mu b} = 5.1\ e^{.42 \times \pi/4} = 5.1 \times 1.39$

$= 7.09$ #

TVA 11030 (WM 7-75)

COMPUTED RHC DATE 8-24-85
CHECKED JRB DATE 8-27-85

T_{13} Horiz. Straight $T = \underline{k} L W_t + T_{14} = .42 \times \frac{13.5}{12} \times .73 + 7.09$

$= 7.44$ #

T_{12} Vertical Bend (45°) $T = T_{13} e^{\underline{k}b} = 7.44 e^{.42 \pi/4} = 7.44 \times 1.39$

$= 10.35$#

T_{11} Up Ramp (45°) $T = W_t L (\sin\alpha + \underline{k} \cos\alpha) + T_{12}$

$= .73 \times \frac{13}{12} (\sin 45° + .42 \cos 45°) + 10.35$

$= 11.14$#

T_{10} Vertical Bend (45°) $T = T_{11} e^{\underline{k}b} = 11.14 e^{.42 \times \pi/4} = 11.14 \times 1.39$

$= 15.50$ #

T_9 Horiz. Straight $T = \underline{k} L W_t + T_{10} = .42 \times 4.46 \times .73 + 15.5$

$= 16.86$ #

T_8 Vertical Bend (30°) $T = T_9 e^{\underline{k}b} = 16.86 e^{.42 \times .52} = 16.86 \times 1.25$

$= 21.01$

T_7 Down Ramp (30°) $T = W_t L (\underline{k} \cos\alpha - \sin\alpha) + T_8$

$= 0.73 \times \frac{12.75}{12} (.42 \cos 30° - \sin 30°) + 21.01$

$= 20.90$

T_6 Vertical Bend (30°) $T = T_7 e^{\underline{k}b} = 20.9 e^{.42 \times .52} = 20.9 \times 1.25$

$= 26.05$ #

T_5 Horizontal Straight (Actually a 5° arc) See p. 1 $T = \underline{k} L W_t + T_6 = .42 \times 5.38 \times .73 + 26.05$

$= 27.69$ #

TVA 11030 (WM-7-75)

COMPUTED RHB DATE 8-24-85
CHECKED JRB DATE 8-27-85

T_4 Horizontal Bend (38°) $T = T_5 e^{\mu b} = 27.69\, e^{.42 \times .66} = 27.69 \times 1.32$

$= 36.59\#$

T_3 Horizontal Straight $T = \mu L W_t + T_4 = .42 \times 17/12 \times .73 + 36.59$

$= 37.02\#$

T_2 Vertical Bend (90°) $T = T_3 e^{\mu b} = 37.02 e^{.42 \times \pi/2} = 37.02 \times 1.93$

$= 71.61\#$

T_1 Vertical Straight (Drum) $T = T_2 - W_t L = 71.61 - .73 \times 6$

$= 67.23\#$

$$SWP_{BA} = \frac{W_c T_2}{2R} = \frac{1.4 \times 71.61}{2 \times .62}$$

$$\boxed{SWP_{BA} = 80.85\ \#/ft.}$$

Pull B to C

COMPUTED RHD DATE 8-24-85
CHECKED JRB DATE 8-27-85

T_{22} Horiz. Straight (Actually a 1° Arc, similar in situation to T_5 on p. 1)

$T = \underline{K} L W_t = .42 \times \frac{11.5}{12} \times .73$

$= 0.29\#$

T_{23} Vertical Bend (30°)

$T = T_{22} e^{\underline{K}\theta} = 0.29\, e^{.42 \times .52} = .29 \times 1.25$

$= 0.37\#$

T_{24} Down Ramp (30°)

$T = W_t L (\underline{K} \cos\alpha - \sin\alpha) + T_{23}$

$= .73 \times \frac{11}{12} (.42 \cos 30° - \sin 30°) + .37$

$= 0.27\#$

T_{25} Vertical Bend (30°)

$T = T_{24} e^{\ } \quad .27\, e^{.42 \times .52} = .27 \times 1.25$

$= 0.34\#$

T_{26} Horiz. Straight

$T = \underline{K} L W_t + T_{25} = .42 \times 6 \times .73 + 0.34$

$= 2.18\#$

T_{27} Horiz. Bend (10°)

$T = T_{26} e^{\underline{K}\theta} = 2.18\, e^{.42 \times .17} = 2.18 \times 1.08$

$= 2.35\#$

T_{28} Horiz. Straight

$T = \underline{K} L W_t + T_{27} = .42 \times .5 \times .73 + 2.35$

$= 2.50\#$

T_{29} Horiz. Bend (10°)

$T = T_{28} e^{\underline{K}\theta} = 2.5\, e^{.42 \times .17} = 2.5 \times 1.08$

$= 2.69\#$

T_{30} Horiz. Straight

$T = \underline{K} L W_t + T_{29} = .42 \times (10 + 11/12) \times .73 + 2.69$

$= 6.04\#$

TVA 11030 (WM 7-75)

COMPUTED LHB DATE 8-24-85
CHECKED JRB DATE 8-27-85

T_{31} Vertical Bend (90°) $T = T_{30} e^{\mu b} = 6.04\, e^{.42 \times \pi/2} = 6.04 \times 1.93$

$= 11.68$ #

T_{32} Vertical Straight (Up) $T = W_t L + T_{31} = .73 \times \left(31 + \frac{5.75}{12}\right) + 11.68$

$= 34.66$ #

T_{33} Vertical Bend (12°) $T = T_{32} e^{\mu b} = 34.66\, e^{.42 \times .21} = 34.66 \times 1.09$

$= 37.85$ #

T_{34} Up Ramp (78°) $T = W_t L (\sin\alpha + \mu \cos\alpha) + T_{33}$

$= .73 \times 13/12 (\sin 78° + .42 \cos 78°) + 37.85$

$= 38.69$ #

T_{35} Vertical Bend (90°) $T = T_{34} e^{\mu b} = 38.69\, e^{.42 \times \pi/2} = 38.69 \times 1.93$

$= 74.85$ #

T_{36} Horiz. Straight $T = \mu L W_t + T_{35} = .42 \times 2.67 \times .73 + 74.85$

$= 75.66$ #

$$SWP_{BC} = W_c T_{35} / 2R = \frac{1.4 \times 74.85}{2 \times .62}$$

$$\boxed{SWP_{BC} = 84.51 \text{ \#/ft}}$$