COMPUTED BMS DATE 8/17/85
CHECKED KWH DATE 8/20/85

SEGMENT:	TYPE	ALGORITHM	TENSION
T_8	Horiz bend (90°)	$T_8 = T_7 e^{\underline{K}b}$	
		$= 2.14\, e^{(0.42)(1.57)}$	$= 4.14$
T_9	Straight	$T_9 = \underline{K} L W_t + T_8$	
		$= (0.42)(1.06)(0.235) + 4.14$	$= 4.25$
T_{10}	Vert bend (25°)	$T_{10} = T_9 e^{\underline{K}b}$	
		$= 4.25\, e^{(0.42)(0.44)}$	$= 5.11$
T_{11}	Up slope (25°)	$T_{11} = W_t L (\sin\alpha + \underline{K}\cos\alpha) + T_{10}$	
		$= (0.235)(0.58)(\sin 25° + 0.42 \cos 25°) + 5.11$	$= 5.22$
T_{12}	Vert bend (25°)	$T_{12} = T_{11} e^{\underline{K}b}$	
		$= 5.22\, e^{(0.42)(0.44)}$	$= 6.28$
T_{13}	Straight	$T_{13} = \underline{K} L W_t + T_{12}$	
		$= (0.42)(11.83)(0.235) + 6.28$	$= 7.44$
T_{14}	Horiz bend (90°)	$T_{14} = T_{13} e^{\underline{K}b}$	
		$= 7.44\, e^{(0.42)(1.57)}$	$= 14.39$
T_{15}	Straight	$T_{15} = \underline{K} L W_t + T_{14}$	
		$= (0.42)(4.25)(0.235) + 14.39$	
		$= 14.81$	

TVA 11030 (WM-7-75)

COMPUTED RMS DATE 8/17/85
CHECKED RHR DATE 8/20/85

$$SWP = \frac{W_c T}{2R} \qquad @\ T_{14} = 90^\circ \qquad R = 4\tfrac{1}{2}"$$

$$= \frac{(1.4)(14.39)}{2(.341)}$$

$$= \underline{29.54} \quad \Leftarrow$$

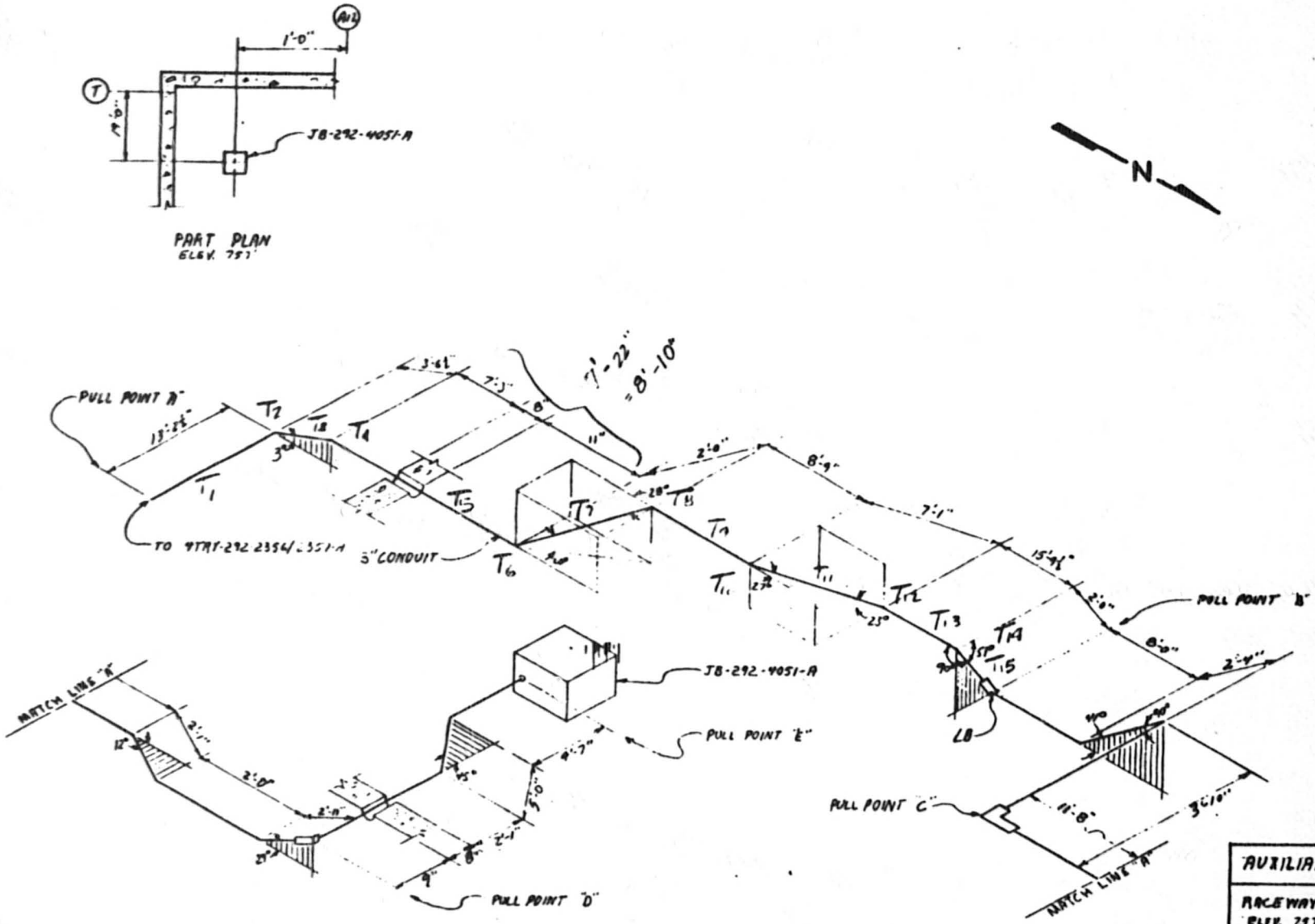

NOTES.

1. ALL BENDS HAVE A BEND RADIUS OF 13" UNLESS NOTED. (3" CONDUIT)
2. TOLERANCES AS SPECIFIED BY EP22.29
3. ALL BENDS NOT SPECIFIED ARE 90°.
4.

CABLE	UNID	MANUFACTURER
2PLC	3601A	LATER
2PLC	5180A	LATER

5. ALL DIMENSIONS ARE TO CENTERLINE.

SHOULD BE 2PL

REFERANCE DWG. 45W828-19,7.

AUXILIARY BUILDING - UNIT 2		
RACEWAY ISOMETRIC DRAWING ELEV. 757' CONDUIT NO. 2PLC2300A		
WATTS BAR NUCLEAR PLANT - TVA - OC		
ENGINEER V.D. Palin	VERIFICATION J.W. [illegible]	APPROVED [illegible]
DATE 8-19-85	DRAWING NUMBER N/A EEB-EP-22.29 SAMPLE PROGRAM	
OC		OA A.W. [illegible]

SIGNATURES SIGNIFY ACCEPTANCE AS "WORSE CASE" ONLY. NOT DIMENSIONAL VERIFICATION.

CONDUIT 2PLC2300A 3I [From pull point A to B]
CABLE 2PL 3601A 1-3C #12 (WGC-1) 0.140 lb/ft. O.D. = .43 in. COMPUTED RMS DATE 8/27/85
[V4] 2PL 5180A 1-3C #2 (WMT) 0.875 1.261 in. CHECKED JRB DATE 8-28-85

$W_t = 0.875 + 0.140 = 1.02$

$\frac{D}{d} = \frac{3.07}{1.261} = 2.43$

$W_c = 1.37$ [From Appx E graph]

$\underline{K} = K W_c - (0.3)(1.37) = 0.41$

SEGMENT	TYPE	ALGORITHM	TENSION
T_1	Straight	$T_1 = L W_t \underline{K} + T_{in}$	
		$= (3.21)(1.02)(0.41) =$	5.52
T_2	Horiz bend (90°)	$T_2 = T_1 e^{\underline{K} b}$	
		$= 5.52\, e^{(0.41)(1.57)} =$	10.50
T_3	Up slope (3°)	$T_3 = L W_t (\sin a + \underline{K} \cos a) + T_2$	
		$= (3.54)(1.02)(\sin 3° + 0.41 \cos 3°) + 10.50$	
		$=$	12.17
T_4	Vert bend (3°)	$T_4 = T_3 e^{\underline{K} b}$	
		$= 12.17\, e^{(0.41)(0.05)} =$	12.43
T_5	Straight	$T_5 = L W_t \underline{K} + T_4$	
		$= (3.83)(1.02)(0.41) + 12.43 =$	16.13
T_6	Vert bend (28°)	$T_6 = T_5 e^{\underline{K} b}$	
		$= 16.13 e^{(0.41)(.49)}$	19.70

TVA 11030 (WM-7-75)

COMPUTED RMS DATE 8/27/85
CHECKED JRB DATE 8-28-85

SEGMENT	TYPE	ALGORITHM	TENSION
T_7	Up slope (20°)	$T_7 = LW_t(\sin\alpha + \underline{K}\cos\alpha) + T_6$ $= (2)(1.02)(\sin 20° + 0.41\cos 20°) + 19.70$ $= 21.19$	
T_8	Vert bend (28°)	$T_8 = T_7 e^{\underline{K}b}$ $= 21.19\, e^{(0.41)(0.49)}$	$= 25.90$
T_9	Straight	$T_9 = LW_t \underline{K} + T_8$ $= (8.75)(1.02)(0.41) + 25.90 = 29.56$	
T_{10}	Vert bend (27°)	$T_{10} = T_9 e^{\underline{K}b}$ $= 29.56\, e^{(0.41)(0.47)}$	$= 35.86$
T_{11}	Down slope (23°)	$T_{11} = LW_t(\underline{K}\cos\alpha - \sin\alpha) + T_{10}$ $= (7.08)(1.02)(0.41\cos 23° - \sin 23°) + 35.86$ $= 35.76$	
T_{12}	Vert bend (27°)	$T_{12} = T_{11} e^{\underline{K}b}$ $= 35.76\, e^{(0.41)(0.47)}$	$= 43.37$
T_{13}	Straight	$T_{13} = LW_t \underline{K} + T_{12}$ $= (15.79)(1.02)(0.41) + 43.37 = 49.97$	
T_{14}	Vert bend (90°)	$T_{14} = T_{13} e^{\underline{K}b}$ $= 49.97 e^{(0.41)(1.57)}$	$= 95.12$

TVA 11030 (WM-7-85)

COMPUTED RMS DATE 8/27/85
CHECKED JRB DATE 8-28-85

SEGMENT: TYPE	ALGORITHM	TENSION

T_{15} Down slope (39°) $T_{15} = L w_t (K \cos a - \sin a) + T_{14}$

$= (2)(1.02)(0.41 \cos 39° - \sin 39°) + 95.12$

$= 94.49$

$$SWP = \frac{W_c T}{2R} \qquad @ T_{14};\ R = 13"$$

$$= \frac{(1.37)(95.12)}{(2)(.455)}$$

$$= \underline{\underline{68.23 \frac{lb}{ft}}}$$

TOTAL BEND = 293°

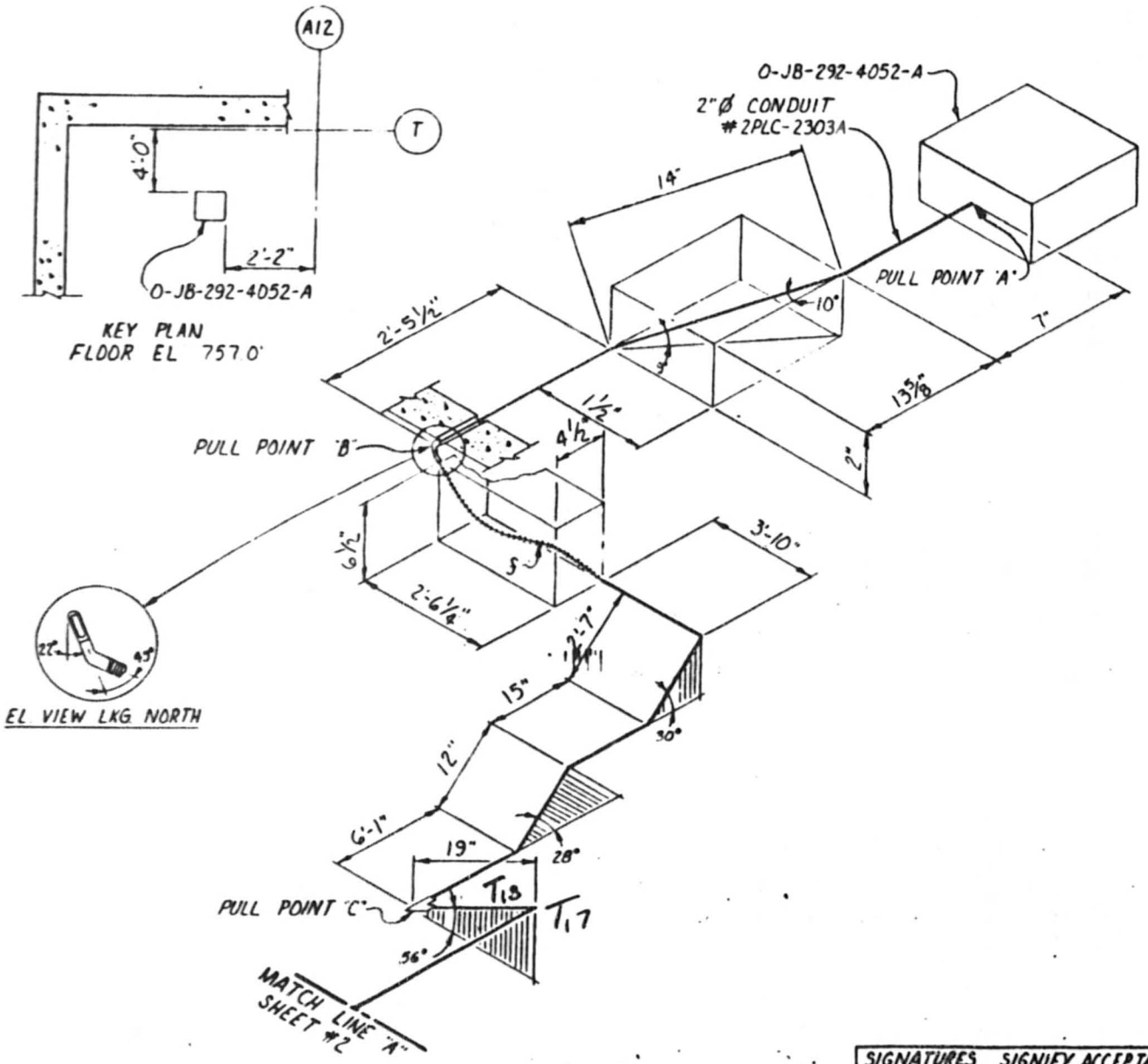

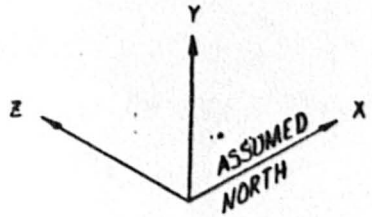

1. ALL BENDS HAVE A RADIUS OF 9½" UNLESS NOTED. (2"Ø CONDUIT)
2. TOLERANCES ARE AS SPECIFIED BY EP 22.29
3. ALL BENDS NOT SPECIFIED ARE 90°.
4.

CABLE UNID	MANUFACTURER
V2040A	later
V2168A	
V2169A	
V2170A	
V2171A	
1M3027A	
2PL3602A	
2PL5125A	
2PL5181A	

5. ALL DIMENSIONS ARE TO ℄.

REF. DWGS. 45W828-7, -19, -29, -31

*SHEET #1 (SEE SHEE #2 FOR CONTINUATION)

AUXILIARY BUILDING		
RACEWAY ISOMETRIC DRAWING ELEVATION 757.0' CONDUIT NO. 2PLC 2303A *		
WATTS BAR NUCLEAR PLANT TVA-OC		
ENGINEER Roger A. Brown	VERIFICATION J. W. Nave	APPROVED [illegible]
DATE 9-21-85	DRAWING NUMBER N/A EEB-EP-22.29 SAMPLE PROGRAM	
OE	QA [illegible]	

SIGNATURES SIGNIFY ACCEPTANCE AS "WORST CASE" ONLY NOT DIMENSIONAL VERIFICATION

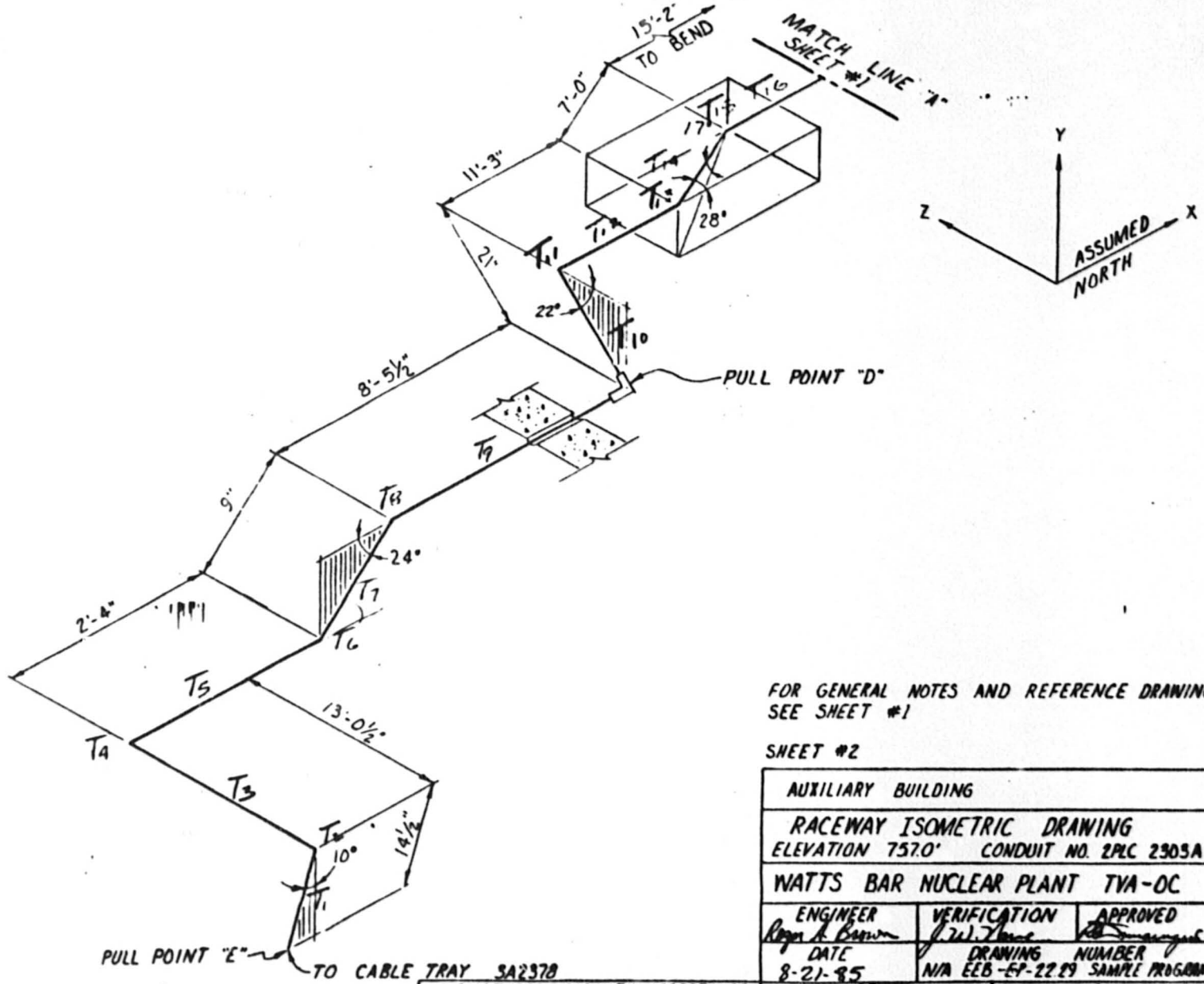

FOR GENERAL NOTES AND REFERENCE DRAWINGS SEE SHEET #1

SHEET #2

AUXILIARY BUILDING		
RACEWAY ISOMETRIC DRAWING ELEVATION 757.0' CONDUIT NO. 2PLC 2303A*		
WATTS BAR NUCLEAR PLANT TVA-OC		
ENGINEER Roger K Brown	VERIFICATION J.W. Jones	APPROVED
DATE 8-21-85	DRAWING NUMBER N/A EEB-EP-22.29 SAMPLE PROGRAM	
OE		QA G.W. Boyer

SIGNATURES SIGNIFY ACCEPTANCE AS "WORST CASE" ONLY NOT DIMENSIONAL VERIFICATION

CONDUIT 2PLC 2303A [From pull point E to D]

CABLES (see below)

[V3]

COMPUTED RMS DATE 8/2

CHECKED JRB DATE 8-

			Weight	CSA
V2040A	4/C #12	WGD	.180	.177
V2168 A	2/C #12	WG.B-1	.100	.101
V2169 A	2/C #12	WG.B-1	.100	.101
V2170 A	2/C #12	WG.B-1	.100	.101
V2171 A	2/C #12	WGB-1	.100	.101
IM 3027A	2/C #14	WHB-1	.070	.075
2PL 3602 A	3/C #14	WHC	.110	.121
2PL 5125A	3/C #14	WHC	.110	.121
2PL 5181A	5/C #12	WG.E	.240	.242
			1.110 lb/ft	1.14

$W_t = 1.11 \frac{lb}{ft}$ (1.34

$W_c = 1.4$ due to different diameters and weight

$\underline{K} = KW_c = (0.3)(1.4) = 0.42$

SEGMENT	TYPE	ALGORITHM	TENSIO
T_1	Up slope (80°)	$T_1 = LW_t(\sin a + \underline{K} \cos a)$	
		$=(1.21)(1.11)(\sin 80° + 0.42 \cos 80°) = 1.4$	
T_2	Vert bend (90°)	$T_2 = T_1 e^{\underline{K}b}$	
		$= 1.42 e^{(0.42)(1.57)}$	$= 2.7$
T_3	Straight	$T_3 = LW_t \underline{K} + T_2$	
		$=(13.04)(1.11)(0.42) + 2.75 = 8.8$	
T_4	Horiz bend (90°)	$T_4 = T_3 e^{\underline{K}b}$	
		$= 8.83e^{(0.42)(1.57)}$	$= 17.0$

TVA 11030 (WM 7-75)

COMPUTED RMS DATE 8/26/85
CHECKED JEB DATE 8-26-85

SEGMENT	TYPE	ALGORITHM	TENSION
T_5	Straight	$T_5 = LW_t \underline{K} + T_4$	
		$= (2.33)(1.11)(0.42) + 17.04$	$= 18.13$
T_6	Vert bend (24°)	$T_6 = T_5 e^{\underline{K}b}$	
		$= 18.13\, e^{(0.42)(.42)}$	$= 21.62$
T_7	Up slope (24°)	$T_7 = LW_t(\sin\alpha + \underline{K}\cos\alpha) + T_6$	
		$= \left(\frac{9}{12}\right)(1.11)(\sin 24° + 0.42\cos 24°) + 21.62$	$= 22.28$
T_8	Vert bend (24°)	$T_8 = T_7 e^{\underline{K}b}$	
		$= 22.28\, e^{(0.42)(0.42)}$	$= 26.57$
T_9	Straight	$T_9 = LW_t \underline{K} + T_8$	
		$= (8.46)(1.11)(0.42) + 26.57$	$= 30.51$

$$SWP = x\frac{T}{R} \qquad x = 0.44 \text{ for 9 cables}$$

@ T_8 $\quad R = 9\frac{1}{2}"$

$$= 0.44\left[\frac{26.57}{.705}\right]$$

$$= 16.58 \frac{lb}{ft}$$

TOTAL BENDS = 228°

TVA 11030 (WM 7-75)

CONDUIT 2PLC2303A [From pull point D to C]

[V3]

COMPUTED BMS DATE 8/26/85
CHECKED JRB DATE 8-26-85

$W_t = 1.11 \frac{lb}{ft}$

$\underline{K} = 0.42$

SEGMENT	TYPE	ALGORITHM	TENSION
T_{10}	Up slope (22°)	$T_{10} = LW_t(\sin a + \underline{K}\cos a) + T_{in}^{\nearrow 0}$	
		$= \left(\frac{21}{12}\right)(1.11)(\sin 22° + 0.42\cos 22°) =$	1.48
T_{11}	Vert bend (90°)	$T_{11} = T_{10}e^{\underline{K}b}$	
		$= 1.48e^{(0.42)(1.57)}$	= 2.87
T_{12}	Straight	$T_{12} = LW_t\underline{K} + T_{11}$	
		$= (11.25)(1.11)(0.42) + 2.87 =$	8.11
T_{13}	Vert bend (28°)	$T_{13} = T_{12}e^{\underline{K}b}$	
		$= 8.11e^{(0.42)(0.49)}$	= 9.96
T_{14}	Down slope (17°)	$T_{14} = LW_t(\underline{K}\cos a - \sin a) + T_{13}$	
		$= (7)(1.11)(0.42\cos 17° - \sin 17°) + 9.96$	
			= 10.81
T_{15}	Vert bend (28°)	$T_{15} = T_{14}e^{\underline{K}b}$	
		$= 10.81e^{(0.42)(0.49)}$	= 13.28
T_{16}	Straight	$T_{16} = LW_t\underline{K} + T_{15}$	
		$= (15.17)(1.11)(0.42) + 13.28 =$	20.35

TVA 11030 (WM-7-75)

COMPUTED RMS DATE 8/26/85
CHECKED JRB DATE 8-26-85

SEGMENT	TYPE	ALGORITHM	TENSION
T_{11}	Vert bend (90°)	$T_{17} = T_{16} e^{\mu b}$	
		$= 20.35 e^{(0.42)(1.57)}$	$= 39.35$
T_{18}	Down slope (56°)	$T_{18} = LW_t(K\cos\alpha - \sin\alpha) + T_{17}$	
		$= \left(\frac{119}{12}\right)(1.11)(0.42\cos 56° - \sin 56°) + 39.35$	
		$= 38.31$	

$SWP = X\frac{T}{12}$ $\quad X = 0.44$ for 9 cables

@ T_{17} $\quad R = 9\frac{1}{2}"$

$$SWP = 0.44\left[\frac{39.35}{.705}\right]$$

$$= \underline{\underline{24.56}}$$

TOTAL BENDS = 236°

TVA 110.0 (WM 7-75)

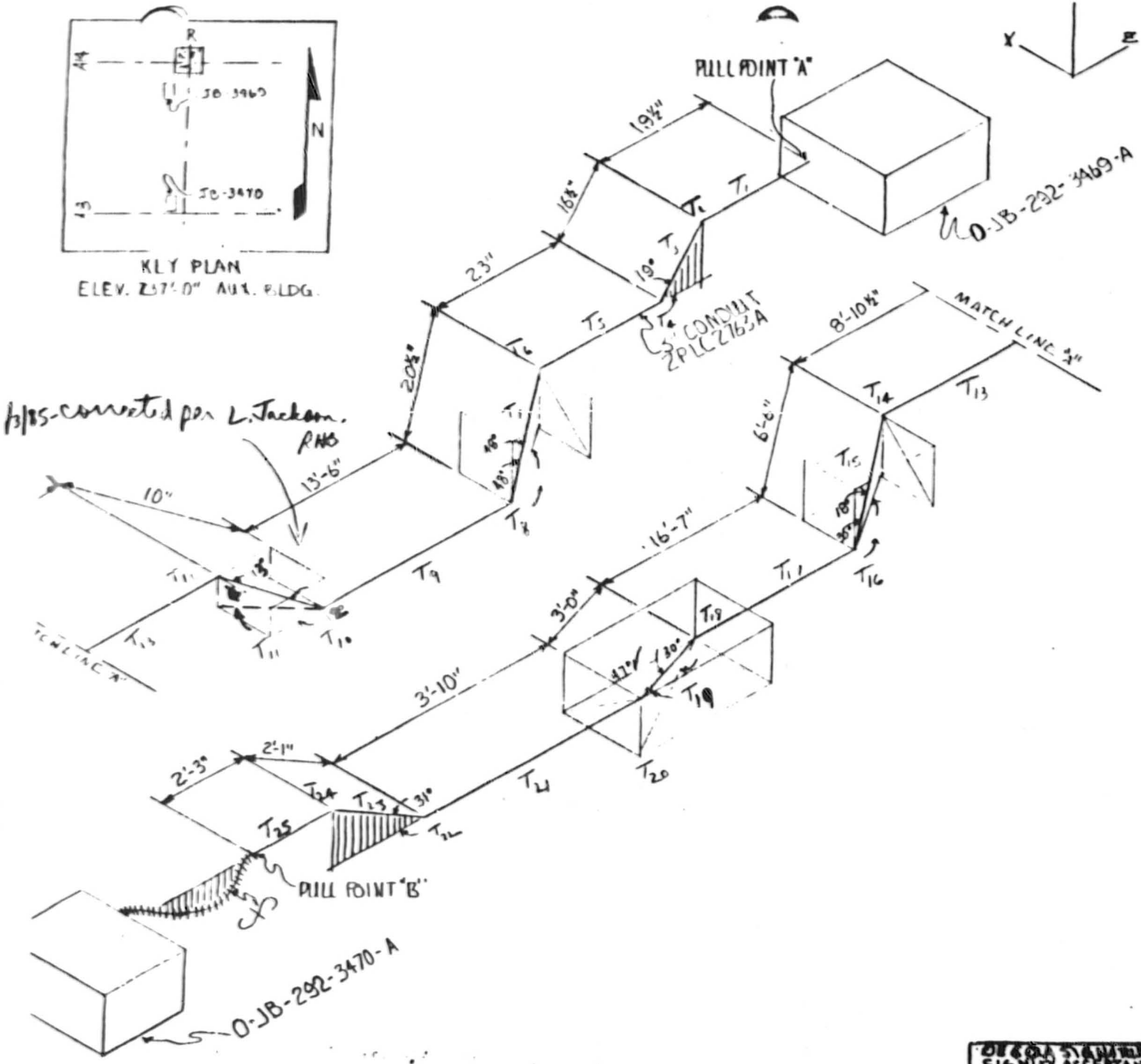

NOTES:

1. ALL BENDS HAVE A RADIUS OF 13" UNLESS OTHERWISE NOTED. (3" I) CONDUIT
2. TOLERANCES AS SPECIFIED BY EP-22.29
3. ALL BENDS NOT SPECIFIED ARE 90°
4. CABLE UNID | MANUFACTURER
   2PL4976A | LATER
   3-1/C # 400 MCM WD NV4A BD FDR
   weight per conductor = 1.398 #/ft
   1.051 "OD
   .867 CSA ⇒ 35.20% fill
5. REF. DWG #45W826-9
6. ALL DIMENSIONS CL TO CL

AUXILIARY BUILDING UNIT-2

RACEWAY ISOMETRIC
DWG. ELE. 737' COND. #2PLC2763A

WATTS BAR NUCLEAR PLANT
TVA/QC

ENGINEER: Lawrence Jackson | DATE: 8-26-85

VERIFICATION: J. W. Nance

APPROVED: Charles L. Cohen Jr.

DRAWING NO: N/A EEB-EP-22.29
SAMPLE PROGRAM

DESIGN SIGNATURES SIGNIFY ACCEPTANCE TO "WORSE CASE" CRITERIA

OC: | QA: G. W. Rogers

CND # 2FLC-2763A (three cables) SHEET 1 OF 5

$K = .3$, $D/d = 3.07/1.051 = 2.92 > 2.5 \Rightarrow$ cradle formation

$W_t = 3 \times 1.398 = 4.194$, $W_c = 1.355$

$\underline{K} = W_c K = 1.355 \times .3 = .4065$ COMPUTED KHL DATE 8-31-95

CHECKED JRB DATE 9-4-95

PULL A to B

T_1 Horiz. Straight $T = \underline{K} L W_t = .4065 \times \frac{19.5}{12} \times 4.194$
$= 2.77\#$

T_2 Vertical Bend (19°) $T = T_1 e^{\underline{K}b} = 2.77\, e^{.4065 \times .33} = 2.77 \times 1.14$
$= 3.17\#$

T_3 Down Ramp (19°) $T = L W_t (\underline{K} \cos\alpha - \sin\alpha) + T_2$
$= \frac{16.5}{12} \times 4.194 (.4065 \cos 19° - \sin 19°) + 3.17$
$= 3.51\#$

T_4 Vertical Bend (19°) $T = T_3 e^{\underline{K}b} = 3.51\, e^{.4065 \times .33} = 3.51 \times 1.14$
$= 4.02\#$

T_5 Horiz. Straight $T = \underline{K} L W_t + T_4 = .4065 \times \frac{23}{12} \times 4.194 + 4.02$
$= 7.28\#$

T_6 Vertical Bend (48°) $T = T_5 e^{\underline{K}b} = 7.28\, e^{.4065 \times .84} = 7.28 \times 1.41$
$= 10.24\#$

T_7 Down Ramp (48°) $T = L W_t (\underline{K} \cos\alpha - \sin\alpha) + T_6$
$= \frac{20.5}{12} \times 4.194 (.4065 \cos 48° - \sin 48°) + 10.24$
$= 6.86\#$

T_8 Vertical Bend (48°) $T = T_7 e^{\underline{K}b} = 6.86\, e^{.4065 \times .84} = 6.86 \times 1.41$
$= 9.65\#$

T_9 Horiz. Straight $T = \underline{K} L W_t + T_8 = .4065 \times 13.5 \times 4.194 + 9.65$
$= 32.66\#$

T_{10} Vertical Bend (12°) $T = T_9 e^{\underline{K}b} = 32.66\, e^{.4065 \times .21} = 32.66 \times 1.09$
$= 35.57\#$

TVA 11000 (WM 7-85)

COMPUTED RHA DATE 8-31-85
CHECKED JRB DATE 9-4-95

T_{11} Up Ramp (13°) $T = LW_t(\sin\alpha + \underline{K}\cos\alpha) + T_{10}$
$= \frac{10}{12} \times 4.194(\sin 13° + .4065\cos 13°) + 35.57$
$= 37.74\#$

T_{12} Vertical Bend 12°) $T = T_{11}e^{\underline{K}b} = 37.74e^{.4065 \times .21} = 37.74 \times 1.09$
$= 41.09\#$

T_{13} Horiz. Straight $T = \underline{K}LW_t + T_{12} = .4065 \times (8 + \frac{11.5}{12}) \times 4.194 + 41.09$
$= 56.22\#$

T_{14} Vertical Bend (30°) $T = T_{13}e^{\underline{K}b} = 56.22e^{.4065 \times \pi/6} = 56.22 \times 1.24$
$= 69.55\#$

T_{15} Down Ramp (18°) $T = LW_t(\underline{K}\cos\alpha - \sin\alpha) + T_{14}$
$= 6.5 \times 4.194(.4065\cos 18° - \sin 18°) + 69.55$
$= 71.67\#$

T_{16} Vertical Bend (30°) $T = T_{15}e^{\underline{K}b} = 71.67e^{.4065\pi/6} = 71.67 \times 1.24$
$= 88.67\#$

T_{17} Horiz. Straight $T = \underline{K}LW_t + T_{16} = .4065 \times (16 + \frac{7}{12}) \times 4.194 + 88.67$
$= 116.94\#$

T_{18} Vertical Bend (47°) $T = T_{17}e^{\underline{K}b} = 116.94e^{.4065 \times .82} = 116.94 \times 1.40$
$= 163.22\#$

T_{19} Up Ramp (30°) $T = LW_t(\sin\alpha + \underline{K}\cos\alpha) + T_{18}$
$= 3 \times 4.194(\sin 30° + .4065\cos 30°) + 163.22$
$= 173.94\#$

T_{20} Vertical Bend (47°) $T = T_{19}e^{\underline{K}b} = 173.94e^{.4065 \times .82} = 173.94 \times 1.40$
$= 242.79\#$

T_{21} Horizo Straight $T = \underline{K}LW_t + T_{20} = .4065 \times (3 + \frac{10}{12}) \times 4.194 + 242.79$
$= 249.32''$

TVA 11030 (WM 7-75)

COMPUTED RHB DATE 8-31-85
CHECKED JRB DATE 9-4-85

T_{22} Vertical Bend (31°) $T = T_{21} e^{\underline{K}b} = 249.32 e^{.4065 \times .54} = 249.32 \times 1.25$
$= 310.66\#$

T_{23} Up Ramp (31°) $T = LW_t (\sin\alpha + \underline{K}\cos\alpha) + T_{22}$
$= (2 + \frac{1}{n}) \times 4.194 (\sin 31° + .4065 \cos 31°) + 310.66$
$= 318.20\#$

T_{24} Vertical Bend (31°) $T = T_{23} e^{\underline{K}b} = 318.2 e^{.4065 \times .54} = 318.2 \times 1.25$
$= 396.48\#$

T_{25} Horiz. Straight $T = \underline{K} LW_t + T_{24} = .4065 \times 2.25 \times 4.194 + 396.48$
$= 400.31\#$

$SWP_{AB} = 1/3 \times (3W_c - 2)(T_{24}/R) = 1/3 \times (3 \times 1.355 - 2)(396.48/.955)$

$\boxed{SWP_{AC} \quad 285.77 \ \#/ft}$

TVA 11030 (WM 7-75)

CND # 2FLC-2763A

SHEET 4 OF 5

COMPUTED RHB DATE 8-31-85

CHECKED JCR DATE 9-4-85

PULL B to A

T_{25} Horiz. Str. $T = \underline{K} L W_t$
$= 3.84\#$

T_{24} Vert. Bend (31°) $T = T_{25} e^{\underline{K}b}$
$= 4.78\#$

T_{23} Down Ramp (31°) $T = L W_t (\underline{K} \cos\alpha - \sin\alpha) + T_{24}$
$= 3.32\#$

T_{22} Vert. Bend (31°) $T = T_{23} e^{\underline{K}b}$
$= 4.14\#$

T_{21} Horiz. Str. $T = \underline{K} L W_t + T_{22}$
$= 10.68\#$

T_{20} Vert. Bend (47°) $T = T_{21} e^{\underline{K}b}$
$= 14.90\#$

T_{19} Down Ramp (30°) $T = L W_t (\underline{K} \cos\alpha - \sin\alpha) + T_{20}$
$= 13.04\#$

T_{18} Vert. Bend (47°) $T = T_{19} e^{\underline{K}b}$
$= 18.20\#$

T_{17} Horiz. Str. $T = \underline{K} L W_t + T_{18}$
$= 46.47\#$

T_{16} Vert. Bend (30°) $T = T_{17} e^{\underline{K}b}$
$= 57.50\#$

T_{15} Up Ramp (18°) $T = L W_t (\sin\alpha + \underline{K} \cos\alpha) + T_{16}$
$= 76.46\#$

T_{14} Vert. Bend (30°) $T = T_{15} e^{\underline{K}b}$
$= 94.60\#$

T_{13} Horiz. Str. $T = \underline{K} L W_t + T_{14}$
$= 109.73\#$

T_{12} Vert. Bend (12°) $T = T_{13} e^{\underline{K}b}$
$= 119.48\#$

T_{11} Down Ramp (13°) $T = L W_t (\underline{K} \cos\alpha - \sin\alpha) + T_{12}$
$= 120.08\#$

T_{10} Vert. Bend (12°) $T = T_{11} e^{\underline{K}b}$
$= 130.75\#$

T_9 Horiz. Str. $T = \underline{K} L W_t + T_{10}$
$= 153.76\#$

T_8 Vert. Bend (48°) $T = T_9 e^{\underline{K}b}$
$= 216.15\#$

TVA 11030 (WM-7-75)

COMPUTED RHB DATE 8-31-85
CHECKED JCB DATE 9-4-85

T_7 Up Ramp (48°) $T = LW_t(\sin\alpha + \underline{K}\cos\alpha) + T_8$
$= 223.42\#$

T_6 Vert. Bend (98°) $T = T_7 e^{\underline{K}\theta}$
$= 314.07\#$

T_5 Horiz. Str. $T = \underline{K} L W_t + T_6$
$= 317.34\#$

T_4 Vert. Bend (19°) $T = T_5 e^{\underline{K}\theta}$
$= 363.13\#$

T_3 Up Ramp (19°) $T = LW_t(\sin\alpha + \underline{K}\cos\alpha) + T_4$
$= 367.22\#$

T_2 Vert. Bend (19°) $T = T_3 e^{\underline{K}\theta}$
$= 420.22\#$

T_1 Horiz. Str. $T = \underline{K} L W_t + T_2$
$= 422.99\#$

$$SWP_{BA} = \tfrac{1}{3} \times (3W_c - 2)(T_2/R)$$

$\boxed{SWP_{BA} = 302.88\ \#/ft}$ Worst Case!

TVA 488 (EN DES 3 77)

CONDUIT 2PL-2763A (3 CABLES) SHEET 1 OF 4

K = .3 D/d = 3.07/1.051 = 2.92 ≈ 3.0 (Granite Formation)

$W_t = 3 \times 1.498 = 4.194$ $W_c = 1.355$

~~P = 27~~ $K = 1.355 \times .1 = .4065$ COMPUTED JCTS DATE 9-8-85

CHECKED JRB DATE 9-20-85

USING LONG FORM OF VERTICAL BEND EQUATION

letters in ( ) for vertical bends refer to figure 3.2.1.6.2-1

T_1	Horizontal 19½"	T = 2.77 ✓
T_2	Vertical Bend 19° (C)	T = 3.66 + 3.17 + .498
T_3	Straight run 16½", 19° down	T = 4.00
T_4	Vertical Bend 19° (B)	T = 4.57 − .95 = 3.62
T_5	Horizontal 23"	T = 6.89
T_6	Vertical Bend 48° (C)	T = 9.68 + .355 = 10.04
T_7	Straight run 20½" 48° down	T = 6.66
T_8	Vertical Bend 48° (B)	T = 9.36 − 3.47 = 5.89
T_9	Horizontal 13'-6"	T = 28.91
T_{10}	Vertical Bend 12° (D)	T = 31.48 − .358 = 31.11
T_{11}	Straight run 10" up 13°	T = 33.29
T_{12}	Vertical Bend 12° (A)	T = 36.25 + .541 = 36.79
T_{13}	Horizontal 8'-10½"	T = 51.92
T_{14}	Vertical Bend 30° (C)	T = 64.24 + .577 = 64.81
T_{15}	Straight run 6'-6" 18° down	T = 66.93
T_{16}	Vertical Bend 30° (B)	T = 82.80 − 1.77 = 81.03
T_{17}	Horizontal 16'-7"	T = 109.30
T_{18}	Vertical Bend 47° (D)	T = 152.56 − .38 = 152.19

COMPUTED LTS DATE 9-8-85
CHECKED JRB DATE 9-20-85

T_{15} : Straight run 3'-0" up 30° $T = 162.90$

T_{20} Vertical Bend 47° (A) $T = 227.38 + 3.37 = 230.75$

T_{21} Horizontal 3'-10" $T = 237.29$

T_{22} Vertical Bend 31° (D) $T = 295.66 - .577 = 295.08$

T_{23} Straight run 2'-1" up 31° $T = 302.63$

T_{24} Vertical Bend 31° (A) $T = 377.07 + 1.77 = 378.84$

T_{25} Horizontal 2'-3" $T = 382.68$

$SWP = \frac{1}{3}(3w_o - 2)\left(\frac{T_{24}}{P}\right) =$ 273.06

CONDUIT 2PLC-2763A SHEET 3 OF 4

COMPUTED KTS DATE 9-8-85

CHECKED JRB DATE 9-20-85

USING CONC FORM FOR VERTICAL BEND EQUATION.

T_{20}	Horizontal 2'-3"	T = 3.84
T_{21}	Vertical Bend 31° (C)	T = 4.78 + .577 = 5.36
T_{22}	Straight run 2'-1" down 31°	T = 3.90
T_{23}	Vertical Bend 31° (B)	T = 4.86 −1.77 = 3.09
T_{24}	Horizontal 3'-10"	T = 9.63
T_{25}	Vertical Bend 47° (C)	T = 13.44 + .38 = 13.82
T_{26}	Straight run 3'-0" down 30°	T = 11.95
T_{27}	Vertical Bend 47° (B)	T = 16.69 − 3.37 = 13.32
T_{28}	Horizontal 16'-7"	T = 41.59
T_{29}	Vertical Bend 30° (D)	T = 51.54 − .577 = 50.87
T_{30}	Straight run 6'-6" up 18°	T = 69.84
T_{31}	Vertical Bend 30° (A)	T = 86.40 + 1.77 = 88.17
T_{32}	Horizontal 8'-10½"	T = 103.30
T_{33}	Vertical Bend 12° (C)	T = 112.48 + .358 = 112.84
T_{34}	Straight run 10" down 13°	T = 113.44
T_{35}	Vertical Bend 12° (B)	T = 123.52 − .541 = 122.98
T_{36}	Horizontal 13'-6"	T = 146.00

COMPUTED KTS DATE 9-8-85
CHECKED JRB DATE 9-20-85

T_8 Vertical Bend 48° (D) $T = 205.23 - .355 = 204.87$

T_7 Straight run $20\frac{1}{2}$" up 48° $T = 212.15$

T_6 Vertical Bend 48° (A) $T = 298.22 + 3.47 = 301.69$

T_5 Horizontal 23" $T = 304.96$

T_4 Vertical Bend 19° (D) $T = 348.96 - .492 = 348.47$

T_3 Straight run $16\frac{1}{2}$" up 19° $T = 353.06$

T_2 Vertical Bend 19° (A) $T = 404.01 + .95 = 404.96$

T_1 Horizontal $19\frac{1}{2}$" $T = 407.73$

$SWP = \frac{1}{3}(3w_1 - 2)\frac{T_2}{P} =$ 291.88

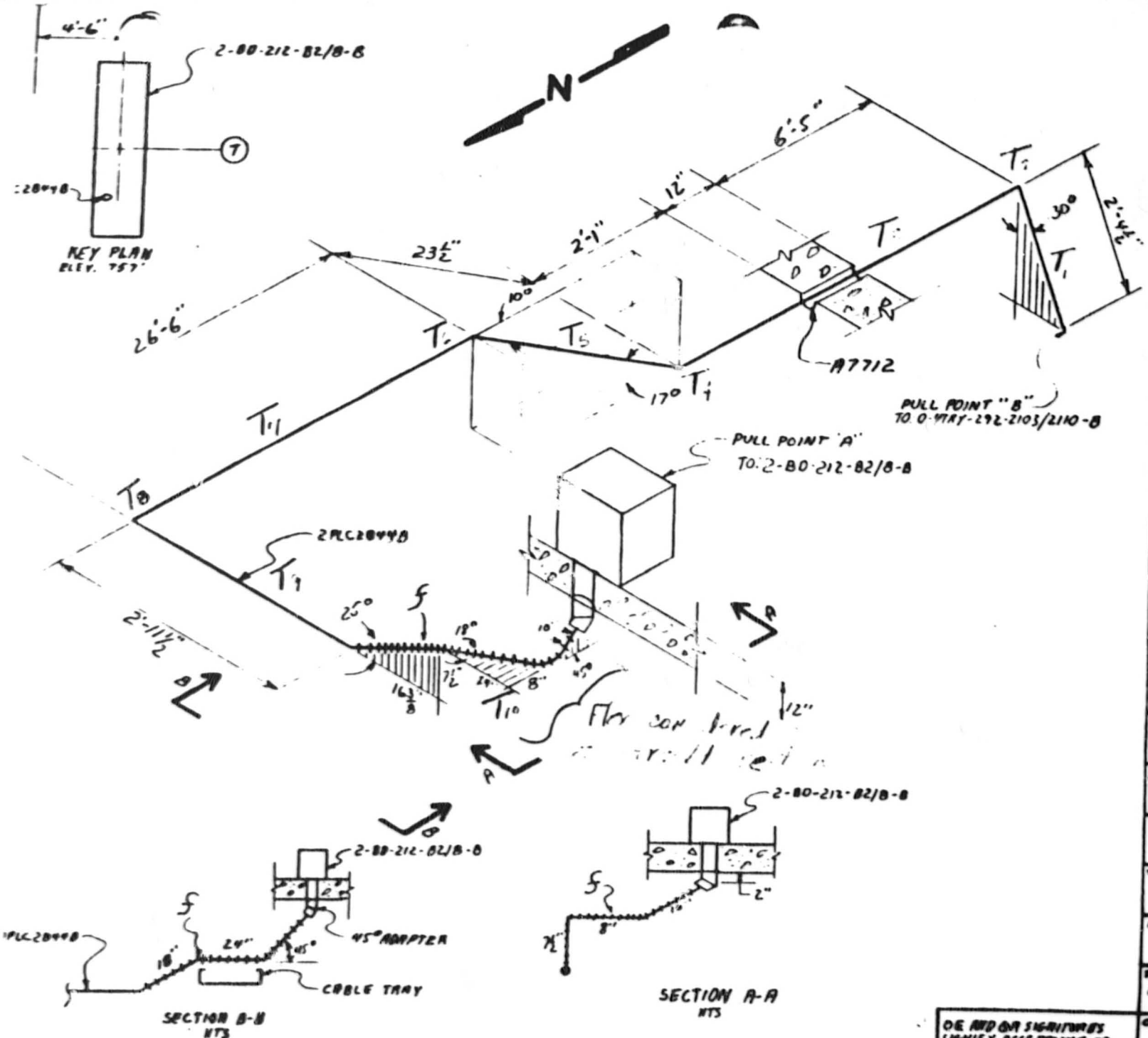

NOTES:

1. ALL BENDS HAVE A RADIUS OF 13" UNLESS OTHERWISE NOTED. (3E)
2. TOLERANCES AS SPECIFIED BY EP22.29.
3. ALL BENDS NOT SPECIFIED ARE 90°
4.

CABLE UNID	MANUFACTURER
2PLC2844B	LATER

5. REF. DWG 47W826-9 47W828-14
6. ALL DIMENSIONS ARE IN

AUXILIARY BLDG.-UNIT 2

RACEWAY ISOMETRIC
DWG. ELE. 757 COND. B2PLC2844B

WATTS BAR NUCLEAR PLANT
TVA/OC

ENGINEER: W.D Parker — DATE: 8-24-85

VERIFICATION:

APPROVED:

PROCEDURE NO: EEB-EP-22.29 SAMPLE PROGRAM

QE AND QA SIGNATURES SIGNIFY ACCEPTANCE TO "WORSE CASE" CRITERIA.

QE: QA:

CONDUIT 2PLC2844B (3I)
CABLE 2PL4986B 3-1/C #400 WDO
V4 1.398 #/ft. O.D. = 1.051

COMPUTED RMS DATE 9/4/85
CHECKED JRB DATE 9-6-85

$W_t = (3)(1.398) = 4.19$

$\frac{D}{d} = \frac{3.07}{1.051} = 2.92$ (>2.5 → cradled configuration)

$W_c = 1.36$

$\underline{K} = KW_c = (0.3)(1.36) = 0.41$

SEGMENT	TYPE	ALGORITHM	TENSION
T_1	Up slope (60°)	$T_1 = LW_t(\sin a + \underline{K}\cos a) + \cancel{T_{in}}^{0}$	
		$= (2.38)(4.19)(\sin 60° + 0.41\cos 60°) =$	10.66
T_2	Vert bend (90°)	$T_2 = T_1 e^{\underline{K}b}$	
		$= 10.66e^{(0.41)(1.57)}$	= 20.29
T_3	Straight	$T_3 = LW_t\underline{K} + T_2$	
		$= (9.5)(4.19)(0.41) + 20.29$	= 36.61
T_4	Vert bend (10°)	$T_4 = T_3 e^{\underline{K}b}$	
		$= 36.61e^{(0.41)(.17)}$	= 39.32
T_5	Up slope (17°)	$T_5 = LW_t(\sin a + \underline{K}\cos a) + T_4$	
		$= \left(\frac{23.5}{12}\right)(4.19)(\sin 17° + 0.41\cos 17°) + 39.32$	= 44.94
T_6	Vert bend (10°)	$T_6 = T_5 e^{\underline{K}b}$	
		$= 44.94e^{(0.41)(.17)}$	= 48.18

TVA 11030 (WM-7-75)

COMPUTED FMS DATE 9/5/85
CHECKED JRB DATE 9-6-85

SEGMENT	TYPE	ALGORITHM	TENSION
T_7	Straight	$T_7 = LW_t\underline{K} + T_6$	
		$= (26.5)(4.19)(0.41) + 48.18 =$	93.71
T_8	Horiz bend (90°)	$T_8 = T_7 e^{\underline{K}\theta}$	
		$= 93.71e^{(0.41)(1.57)} =$	178.37
T_9	Straight	$T_9 = LW_t\underline{K} + T_8$	
		$= (2.96)(4.19)(0.41) + 178.37 =$	183.46
T_{10}	Straight (f)	$T_{10} = LW_t\underline{K} + T_9$	
		$= (4.44)(4.19)(0.41) + 183.46 =$	191.09

[This assumes pulling cables through flex section with flex extended straight along same line as previous rigid section.]

$$SWP = \frac{1}{3}\left[3W_c - 2\right]\left[\frac{T}{R}\right] \qquad @\ T_8 \quad R = 13"$$

$$= \frac{1}{3}\left[3(1.36) - 2\right]\left[\frac{178.37}{.455}\right]$$

$$= \underline{\underline{129.50\ \frac{lb}{ft}}}$$

TVA 11030 (WM 7-75)

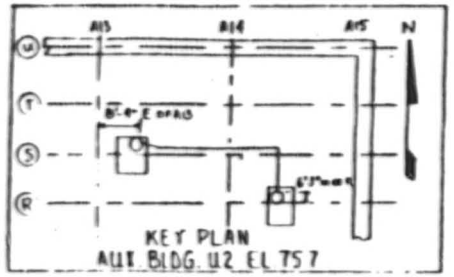

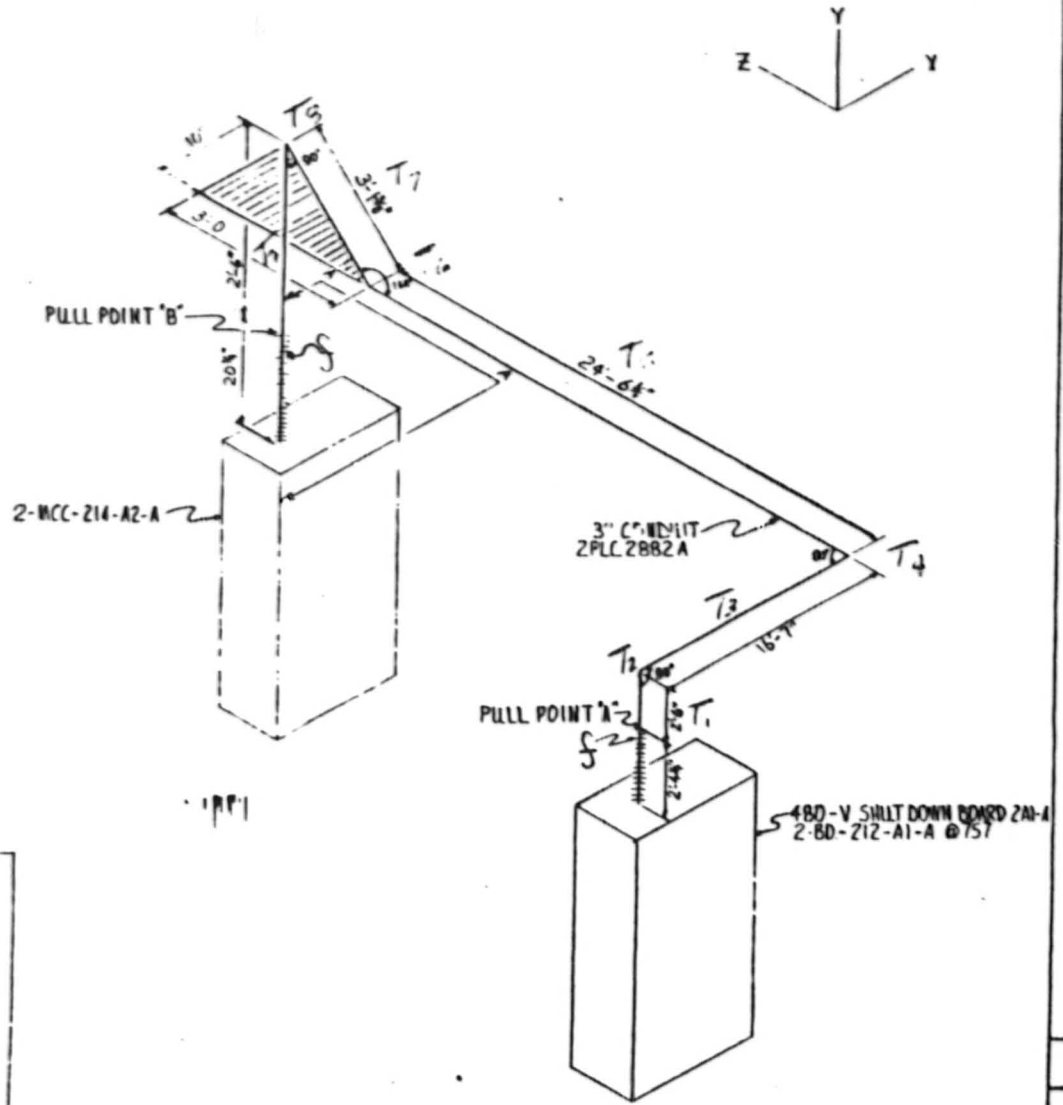

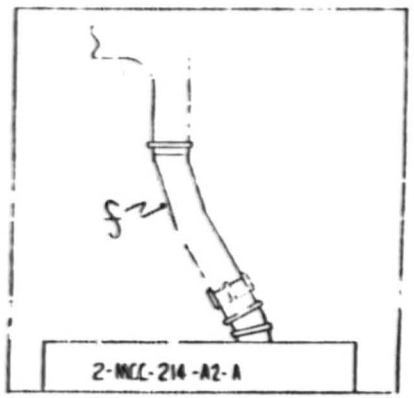

PART PLAN AA

NOTES:

1. ALL BENDS HAVE RADIUS OF 13" UNLESS OTHERWISE NOTED. (3" I Conduit)
2. TOLERANCES AS SPECIFIED BY EEB-EP-22.2
3. ALL BENDS NOT SPECIFIED ARE 90°
4.

CABLE UNIDS	MANUFACTURER
2PL4962A	LATER

5. REF. DWG. # 45W828-16
6. ALL DIMENSIONS ℄ TO ℄

AUXILIARY BUILDING — UNIT 2
RACEWAY ISOMETRIC DRAWING
EL. 757'-0" - CONDUIT NO. 2PLC 2882A

WATTS BAR NUCLEAR PLANT TVA-OC

ENGINEER	VERIFICATION	APPROVED
DATE 8-19-85	DRAWING NUMBER WBEEB-EP-22.29 SAMPLE PROGRAM	
OE		QA

ENGINEERS SIGNIFY ACCEPTANCE OF AS "NOMINAL CASE ONLY" NOT DIMENSIONAL VERIFICATION.

* OC-Questionable as to access case criteria

CONDUIT 2PLC 2882A 3I [From pull point A to B]
CABLE 2PL 4962A 3-1/C #400 (WDO)
[V4] 1.398 lb/ft O.D. = 1.051

COMPUTED RMS DATE 8/24/85
CHECKED JRB DATE 8-24-85

$W_t = (3)(1.398) = 4.19$

$\frac{D}{d} = \frac{3.07}{1.051} = 2.92 \quad (>2.5)$

$W_c = 1.36$

$\underline{K} = K W_c = (0.3)(1.36) = 0.41$

SEGMENT	TYPE	ALGORITHM	TENSION
T_1	Up slope (90°)	$T_1 = W_t L + \cancel{T_{in}}^{0}$	
		$= (4.19)(2.5)$	$= 10.48$
T_2	Vert bend (90°)	$T_2 = T_1 e^{\underline{K}b}$	
		$= 10.48\, e^{(0.41)(1.57)}$	$= 19.94$
T_3	Straight	$T_3 = L W_t \underline{K} + T_2$	
		$= (16.58)(4.19)(0.41) + 19.94$	$= 48.42$
T_4	Horiz bend (90°)	$T_4 = T_3 e^{\underline{K}b}$	
		$= 48.41\, e^{(0.41)(1.57)}$	$= 92.17$
T_5	Straight	$T_5 = L W_t \underline{K} + T_4$	
		$= (24.56)(4.19)(0.41) + 92.17$	$= 134.36$
T_6	Horiz bend (16°)	$T_6 = T_5 e^{\underline{K}b}$	
		$= 134.36\, e^{(0.41)(0.28)}$	$= 150.71$

TVA 11030 (WM-7-75)

COMPUTED RMS DATE 8/24/85
CHECKED JRB DATE 8-24-85

SEGMENT	TYPE	ALGORITHM	TENSION
T_7	Straight	$T_7 = LW_c\underline{K} + T_6$	
		$= (3.11)(4.19)(0.41) + 150.71$	$= 156.05$
T_8	Vert bend (90°)	$T_8 = T_7 e^{\underline{K}b}$	
		$= 156.05\, e^{(0.41)(1.57)}$	$= 297.05$
T_9	Down slope (90°)	$T_9 = LW_c(\underline{K}\cos a - \sin a) + T_8$	
		$= (2.5)(4.19)(0.41\cos 90° - \sin 90°) + 297.05$	
		$= 286.57$	

$$SWP = \left(\frac{1}{3}\right)\left(3W_c - 2\right)\left(\frac{T}{R}\right) \qquad @\ T_8 \quad R = 13"$$

$$= \left(\frac{1}{3}\right)\left(3(1.36) - 2\right)\left(\frac{297.05}{.955}\right)$$

$$= \underline{215.66}$$

TOTAL BENDS = 286°

TVA 11030 (WM 7-85)

CONDUIT 2PLC 2882A [From pull point B to A]
CABLE 2PL 4962A 3-1/C #400
[V4] 1.398 #/ft O.D. = 1.051

COMPUTED KMS DATE 8/24/85
CHECKED JRB DATE 8-24-85

$W_t = (3)(1.398) = 4.19$

$W_c = 1.36$

$\underline{K} = K W_c = (0.3)(1.36) = 0.41$

SEGMENT	TYPE	ALGORITHM	TENSION
T_9	Up slope (90°)	$T_9 = LW_t + T_{La}$	
		$= (2.5)(4.19)$	$= 10.48$
T_8	Horiz bend (90°)	$T_8 = T_9 e^{\underline{K}b}$	
		$= 10.48\, e^{(0.41)(1.57)}$	$= 19.94$
T_7	Straight	$T_7 = LW_t \underline{K} + T_8$	
		$= (3.11)(4.19)(0.41) + 19.94$	$= 25.29$
T_6	Horiz bend (16°)	$T_6 = T_7 e^{\underline{K}b}$	
		$= 25.29\, e^{(0.41)(0.28)}$	$= 28.37$
T_5	Straight	$T_5 = LW_t \underline{K} + T_6$	
		$= (24.56)(4.19)(0.41) + 28.37$	$= 70.56$
T_4	Horiz bend (90°)	$T_4 = T_5 e^{\underline{K}b}$	
		$= 70.56\, e^{(0.41)(1.57)}$	$= 134.34$
T_3	Straight	$T_3 = LW_t \underline{K} + T_4$	
		$= (16.58)(4.19)(0.41) + 134.34$	$= 162.83$

TVA 11030 (WM-7-75)

COMPUTED RMS DATE 8/24/85
CHECKED JLB DATE 8-24-85

SEGMENT	TYPE	ALGORITHM	TENSION

T_2 Vert bend (90°) $T_2 = T_3 e^{Kb}$

$= 162.83\, e^{(0.41)(1.57)} = 309.95$

T_1 Down slope (90°) $T_1 = -LW_c + T_2$

$= -(2.5)(4.19) + 309.95$

$= 299.48$

$SWP = \frac{1}{3}\left[3W_c - 2\right]\left[\frac{T}{R}\right]$ @ T_2 $R = 13"$

$= \frac{1}{3}\left[3(1.36) - 2\right]\left[\frac{309.95}{.955}\right]$

$= 225.02$

TOTAL BEND = 286°

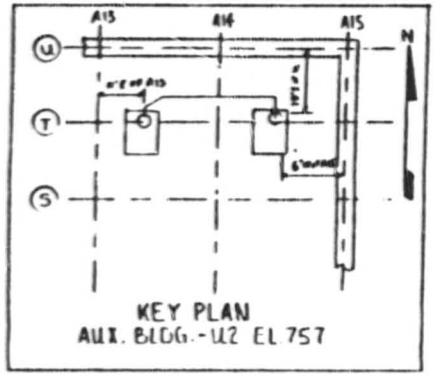

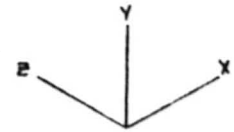

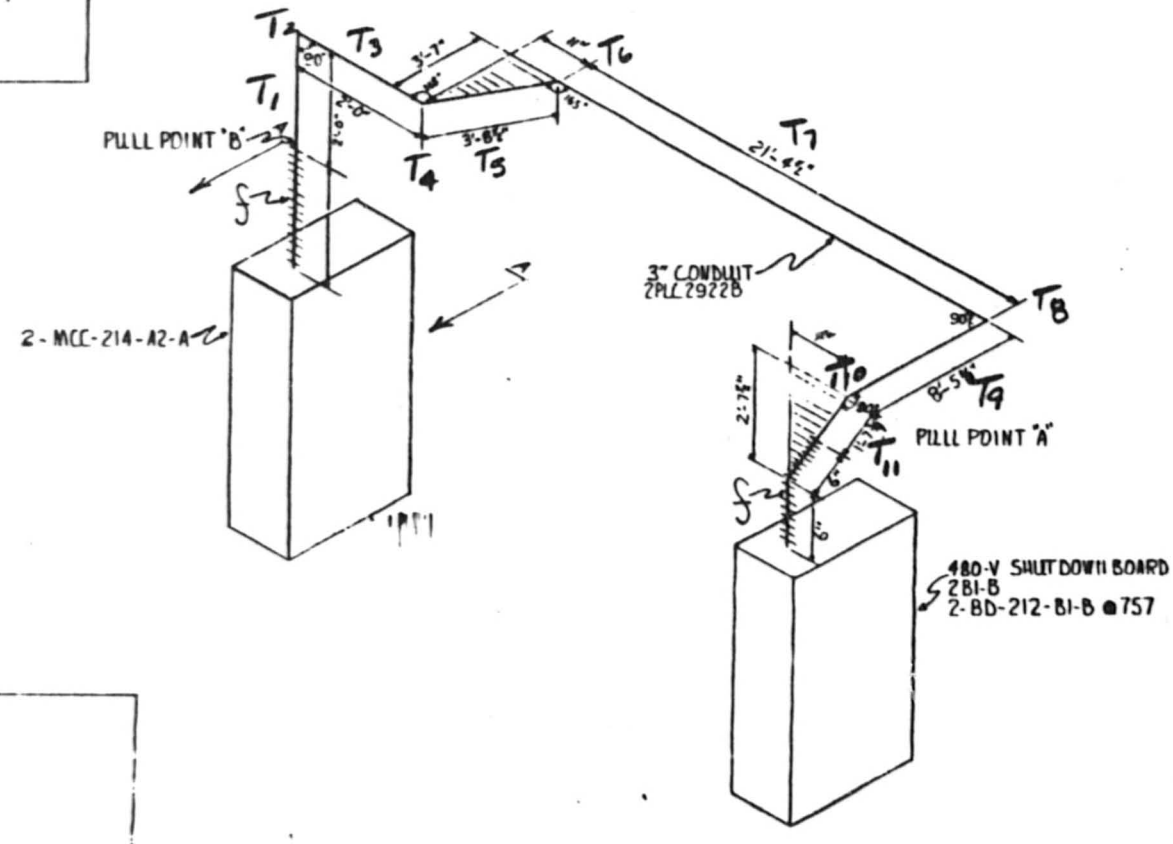

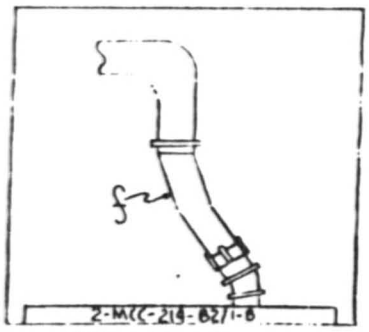

NOTES:

1. ALL BENDS HAVE RADIUS OF 13" UNLESS OTHERWISE NOTED. (3" I CONDUIT)
2. TOLERANCES AS SPECIFIED BY EP 22.29
3. ALL BENDS NOT SPECIFIED ARE 90°
4.

CABLE NUMBS	MANUFACTURER
2PL4970B	LATER

5. REF. DWG.# 45W82A-14
6. ALL DIMENSIONS C TO C

AUXILIARY BUILDING—UNIT 2		
RACEWAY ISOMETRIC DRAWING EL. 757'-0"-CONDUIT NO. 2PLC2922B		
WATTS BAR NUCLEAR PLANT-TVA-OC		
ENGINEER	VERIFICATION	APPROVED
DATE 8-20-85	DRAWING NUMBER N/A EEB-EP-22.29 SAMPLE PROGRAM	
OC	QA	

SIGNATURES SIGNIFY ACCEPTANCE AS WORSE CASE ONLY" NOT DIMENSIONAL VERIFICATION.

CONDUIT 2PLC2922B 3I [From pull point B to A]
CABLE 2PL4970B 3-1/C #400 (WDO)
[V4] 1.398 lb/ft O.D. = 1.051 in.

COMPUTED RMS DATE 8/22/85
CHECKED JLB DATE 8-29-85

$W_t = (3)(1.398) = 4.19$

$\frac{D}{d} = \frac{3.07}{1.051} = 2.92$ (>2.5 → cradled configuration)

$W_c = 1.36$

$\underline{K} = KW_c - (0.3)(1.36) = 0.41$

SEGMENT	TYPE	ALGORITHM	TENSION
T_1	Up slope (90°)	$T_1 = LW_t + T_{min}$	
		$= (2)(4.19)$	= 8.38
T_2	Vert bend (90°)	$T_2 = T_1 e^{\underline{K}b}$	
		$= 8.38\, e^{(0.41)(1.57)}$	= 15.95
T_3	Straight	$T_3 = LW_t \underline{K} + T_2$	
		$= (2)(4.19)(0.41) + 15.95$	= 19.39
T_4	Horiz bend (15°)	$T_4 = T_3 e^{\underline{K}b}$	
		$= 19.39\, e^{(0.41)(0.26)}$	= 21.58
T_5	Straight	$T_5 = LW_t \underline{K} + T_4$	
		$= (3.71)(4.19)(0.41) + 21.58$	= 27.9
T_6	Horiz bend (15°)	$T_6 = T_5 e^{\underline{K}b}$	
		$= 27.95\, e^{(0.41)(0.26)}$	= 31.10

TVA 11030 (WM-7-75)

COMPUTED RMS DATE 8/22/85
CHECKED JRB DATE 8-29-85

SEGMENT	TYPE	ALGORITHM	TENSION
T_7	Straight	$T_7 = LW_t \underline{K} + T_6$	
		$= (21.38)(4.19)(0.41) + 31.10 = 67.82$	
T_8	Horiz bend (90°)	$T_8 = T_7 e^{\underline{K}b}$	
		$= 67.82 e^{(0.41)(1.57)}$	$= 129.09$
T_9	Straight	$T_9 = LW_t \underline{K} + T_8$	
		$= (8.48)(4.19)(0.41) + 129.09 = 143.66$	
T_{10}	Vert bend (90°)	$T_{10} = T_9 e^{\underline{K}b}$	
		$= 143.66 e^{(0.41)(1.57)}$	$= 273.46$
T_{11}	Down slope (90°)	$T_{11} = LW_t(\underline{K}\cos^{\circ}a - \sin^{'}a) + T_{10}$	
		$= -(1.65)(4.19) + 273.46 = 266.56$	

$$SWP = \frac{1}{3}\left[3W_c - 2\right]\left[\frac{T}{R}\right] \quad @\ T_{10} \quad R = 13"$$

$$= \frac{1}{3}\left[3(1.36) - 2\right]\left[\frac{273.46}{.455}\right]$$

$$= 198.53\ \frac{lb}{ft}$$

TOTAL BENDS = 300°

TVA 11030 (WM 7-75)

CONDUIT 2DLC2922B [From pull point A to B]

COMPUTED AMS DATE 8/22/85
CHECKED JRB DATE 8-29-85

$W_t = 4.19$

$W_c = 1.36$

$K = 0.41$

SEGMENT	TYPE	ALGORITHM	TENSION
T_{11}	Up slope (90°)	$T_{11} = LW_t + T_{\nearrow}^{\circ}$	
		$= (1.65)(4.19)$	$= 6.91$
T_{10}	Vert bend (90°)	$T_{10} = T_{11} e^{Kb}$	
		$= 6.91\, e^{(0.41)(1.57)}$	$= 13.16$
T_9	Straight	$T_9 = LW_t K + T_{10}$	
		$= (8.48)(4.19)(0.41) + 13.16$	$= 27.73$
T_8	Horiz bend (90°)	$T_8 = T_9 e^{Kb}$	
		$= 27.73\, e^{(0.41)(1.57)}$	$= 52.78$
T_7	Straight	$T_7 = LW_t K + T_8$	
		$= (21.38)(4.19)(0.41) + 52.78$	$= 89.51$
T_6	Horiz bend (15°)	$T_6 = T_7 e^{Kb}$	
		$= 89.51\, e^{(0.41)(0.26)}$	$= 99.56$
T_5	Straight	$T_5 = LW_t K + T_6$	
		$= (3.71)(4.19)(0.41) + 99.56$	$= 106.02$

TVA 11030 (WM 7-75)

COMPUTED PMS DATE 8/22/85
CHECKED JRB DATE 8-29-85

SEGMENT	TYPE	ALGORITHM	TENSION
T_4	Horiz bend (45°)	$T_4 = T_5 e^{\mu b}$ $= 106.02 e^{(0.41)(0.26)}$	$= 117.95$
T_3	Straight	$T_3 = L W_t \mu + T_4$ $= (2)(4.19)(0.41) + 117.95$	$= 121.38$
T_2	Vert bend (90°)	$T_2 = T_3 e^{\mu b}$ $= 121.38 e^{(0.41)(1.57)}$	$= 231.06$
T_1	Down slope (90°)	$T_1 = -L W_t + T_2$ $= -(2)(4.19) + 231.06$	$= 222.68$

$$SWP = \frac{1}{3}\left[3W_c - 2\right]\left[\frac{T}{R}\right] \quad @ \; T_2 \quad R = 13''$$

$$= \frac{1}{3}\left[3(1.36) - 2\right]\left[\frac{231.06}{.955}\right]$$

$$= \underline{\underline{167.75 \; \frac{lb}{ft}}}$$

TVA 11030 (WM-7-75)

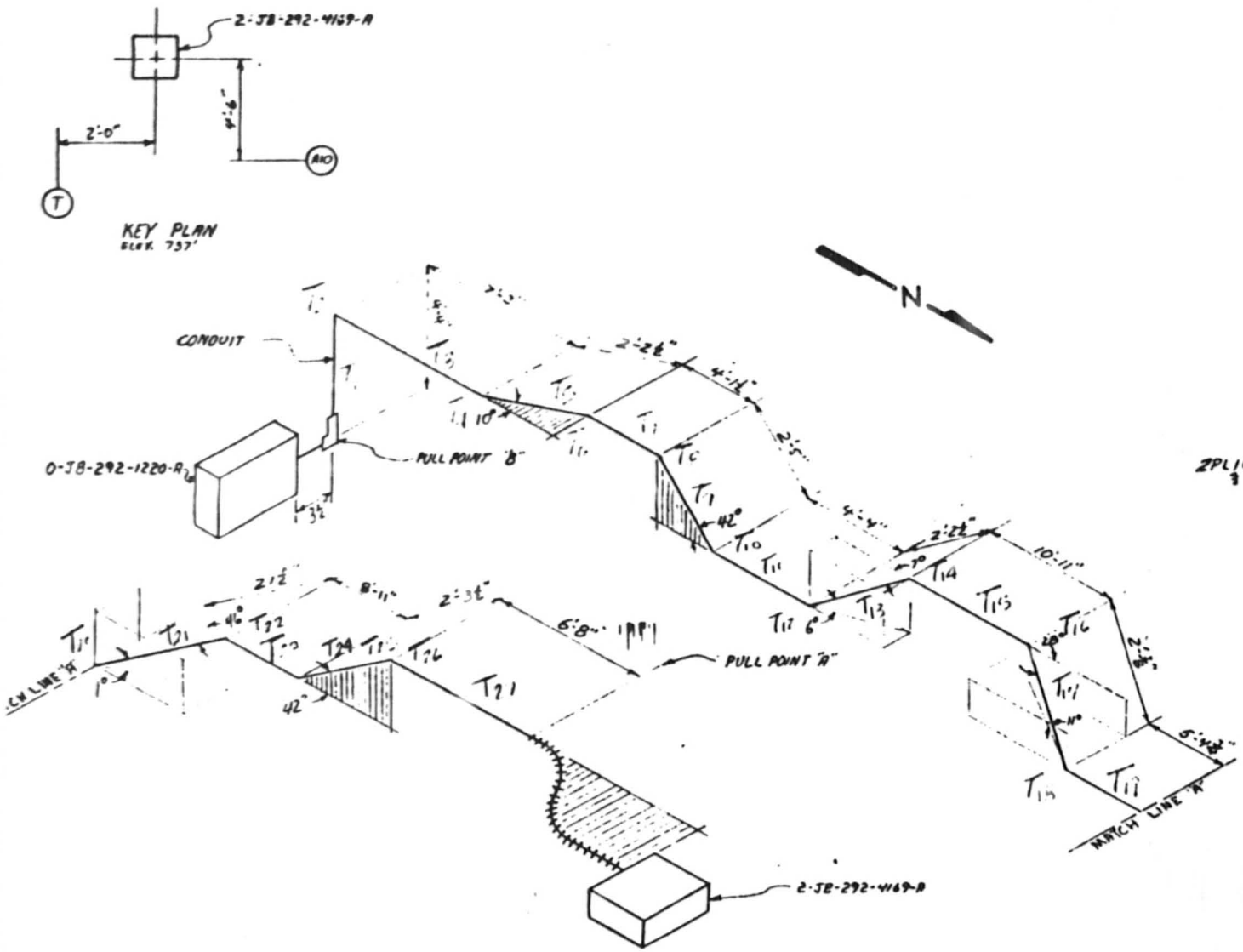

NOTES

1. ALL BENDS HAVE A BEND RADIUS OF 13" UNLESS NOTED. (3" CONDUIT)
2. TOLERANCES AS SPECIFIED BY EP-22.29
3. ALL BENDS NOT SPECIFIED ARE 90°.
4. ALL DIMENSIONS ARE TO CENTERLINE.
5.

CABLE UNID	MANU.	CABLE UNID	MANU.
RM57A	LATER	2PM4491A	LATER
2PL1064A		2PM4493A	
2PL065A		2PM4506A	
2PM2236A		2PM4508A	
2PM2285A		2PM5057A	
2PM3721A		2RM385A	
2PM3723A		2RM387A	
2PM3780A		2RM397A	
2PM3011A		2PM399A	
2PM3990A		2PM440A	2RM
2PM4420A		2PM442A	
2PM4430A		2PM444A	
2PM4460A		2PM446A	
2PM4466A			
2PM4468A			
2PM4478A			

2PL1065A

REFERANCE DWG. 45W826-20,9

AUXILIARY BUILDING - UNIT 2		
RACEWAY ISOMETRIC DRAWING ELEV. 737' CONDUIT NO. 2PM7401A		
WATTS BAR NUCLEAR PLANT - TVA - OC		
ENGINEER [signature]	VERIFICATION [signature]	APPROVED [signature]
DATE 8-20-85	DRAWING NUMBER N/A EEB-EP-22.29 SAMPLE PROGRAM	
OE		[signature]

SIGNATURES SIGNIFY ACCEPTANCE AS "WORSE CASE" ONLY, NOT DIMENSIONAL VERIFICATION.

CONDUIT 2PM 7401A [From pull point B to A]

CABLES (see below) 3I

[V2]

COMPUTED RMS DATE 8/24/85

CHECKED JKB DATE 8-29-85

			Weight	
PM 57A	1-8/C #22	WWK	.170	
2PL 1064A	1-3/C #16	WVB	.089	
1065A	1-2/C #16	WVA	.075	
2PM 2236A	1-2/C #16	WVA	.075	
2285A	"		.075	
3121A	"		.075	
3123A	"		.075	
3IECA	"		.075	
3511A	"		.075	
3710A	"		.075	
4420A	"		.075	
4430A	"		.075	
4460A	"		.075	
4466A	"		.075	
4466A	"		.075	
4476A	"			
4478A	"		.075	
4491A	"		.075	
4493A	"		.075	
4506A	"		.075	
4508A	"		.075	
5051A	"		.075	
2PM 3EIA	"		.075	
3E1A	1-8/C #22	WWK	(.170)	— not pulled yet
3171A	1-2/C #16	WVA	.075	
3191A	1-8/C #22	WWK	(.170)	— not pulled yet
4401A	1-1/C #22	WTK	.032	
4421A	1-1/C #22	WTK	.032	
4441A	1-1/C #22	WTK	.032	
4461A	1-1/C #22	WTK	.032	

30 cables

W_t = 1.96

W_c = 1.4

$\underline{K} = K W_c = (0.3)(1.4) = 0.42$

TVA 11030 (WM 7-75)

COMPUTED RMS DATE 8/24/85
CHECKED JRB DATE 8-29-85

SEGMENT	TYPE	ALGORITHM	TENSION
T_1	Up slope (90°)	$T_1 = LW_t + \cancel{T_{in}}^{0}$	
		$= (4.33)(1.96)$	$= 8.49$
T_2	Vert bend (90°)	$T_2 = T_1 e^{kb}$	
		$= 8.49 e^{(0.42)(1.57)}$	$= 16.41$
T_3	Straight	$T_3 = LW_t \underline{K} + T_2$	
		$= (7.25)(1.96)(0.42) + 16.41$	$= 22.38$
T_4	Horiz bend (10°)	$T_4 = T_3 e^{\underline{K}b}$	
		$= 22.38 e^{(0.42)(.17)}$	$= 24.03$
T_5	Straight	$T_5 = LW_t \underline{K} + T_4$	
		$= (2.21)(1.96)(0.42) +$	$= 25.85$
T_6	Horiz bend (10°)	$T_6 = T_5 e^{\underline{K}b}$	
		$= 25.85 e^{(0.42)(.17)}$	$= 27.76$
T_7	Straight	$T_7 = LW_t \underline{K} + T_6$	
		$= (4.13)(1.96)(0.42) + 27.76$	$= 31.16$
T_8	Vert bend (42°)	$T_8 = T_7 e^{\underline{K}b}$	
		$= 31.16 e^{(0.42)(0.73)}$	$= 42.34$
T_9	Down slope (42°)	$T_9 = LW_t(\underline{K}\cos a - \sin a) + T_8$	
		$= (2.42)(1.96)(0.42\cos 42° - \sin 42°) + 42.34 =$	40.65

TVA 11030 (WM-7-75)

COMPUTED RNS DATE 8/24/85
CHECKED JRB DATE 8-29-85

SEGMENT	TYPE	ALGORITHM	TENSION
T_{10}	Vert bend (42°)	$T_{10} = T_9 e^{\underline{K}b}$ $= 40.65e^{(0.42)(0.73)}$	$= 55.24$
T_{11}	Straight	$T_{11} = LW_t \underline{K} + T_{10}$ $= (4.33)(1.96)(0.42) +$	$= 58.80$
T_{12}	Vert bend (7°)	$T_{12} = T_{11} e^{\underline{K}b}$ $= 58.80e^{(0.42)(0.12)}$	$= 61.84$
T_{13}	Up slope (6°)	$T_{13} = LW_t(\sin a + \underline{K}\cos a) + T_{12}$ $= (2.21)(1.96)(\sin 6° + 0.42\cos 6°) + 61.84$	$= 64.11$
T_{14}	Vert bend (7°)	$T_{14} = T_{13} e^{\underline{K}b}$ $= 64.11e^{(0.42)(0.12)}$	$= 67.42$
T_{15}	Straight	$T_{15} = LW_t \underline{K} + T_{14}$ $= (10.42)(1.96)(0.42) + 67.42$	$= 76.41$
T_{16}	Vert bend (28°)	$T_{16} = T_{15} e^{\underline{K}b}$ $= 76.41\ e^{(0.42)(0.49)}$	$= 93.87$
T_{17}	Down slope (11°)	$T_{17} = LW_t(\underline{K}\cos a - \sin a) + T_{16}$ $= (2.03)(1.96)(0.42\cos 11° - \sin 11°) + 93.87$	$= 94.75$

TVA 11010 (WM-7-75)

COMPUTED RMS DATE 8/24/85
CHECKED JRB DATE 8-24-85

SEGMENT	TYPE	ALGORITHM	TENSION
T_{18}	Vert bend (26°)	$T_{18} = T_{17} e^{\underline{K}b}$ $= 94.75 e^{(0.42 \times 0.49)}$	$= 116.40$
T_{19}	Straight	$T_{19} = L W_t \underline{K} + T_{18}$ $= (5.40)(1.96)(0.42) + 116.40$	$= 120.85$
T_{20}	Vert bend (46°)	$T_{20} = T_{19} e^{\underline{K}b}$ $= 120.85 e^{(0.42 \times 0.80)}$	$= 169.11$
T_{21}	Up slope (1°)	$T_{21} = L W_t (\sin a + \underline{K} \cos a) + T_{20}$ $= \left(\frac{21.5}{12}\right)(1.96)(\sin 1° + 0.42 \cos 1°) + 169.11$	$= 170.64$
T_{22}	Vert bend (46°)	$T_{22} = T_{21} e^{\underline{K}b}$ $= 170.64 e^{(0.42 \times 0.80)}$	$= 238.79$
T_{23}	Straight	$T_{23} = L W_t \underline{K} + T_{22}$ $= (8.92)(1.96)(0.42) + 238.79$	$= 246.13$
T_{24}	Vert bend (42°)	$T_{24} = T_{23} e^{\underline{K}b}$ $= 246.13 e^{(0.42 \times 0.73)}$	$= 334.44$
T_{25}	Up slope (42°)	$T_{25} = L W_t (\sin a + \underline{K} \cos a) + T_{24}$ $= (2.29)(1.96)(\sin 42° + 0.42 \cos 42°) + 334.44$	$= 338.64$

TVA 11030 (WM 7-75)

COMPUTED RNS DATE 8/24/85
CHECKED JRB DATE 8-29-85

SEGMENT	TYPE	ALGORITHM	TENSION
T_{26}	Vert bend(47)	$T_{26} = T_{25} e^{\underline{K}b}$	
		$= 338.84\, e^{(0.42)(0.73)} = 460.42$	
T_{27}	Straight	$T_{27} = LW_1 \underline{K} + T_{26}$	
		$= (6.67)(1.96)(0.42) + 460.42 = 465.91$	

$SWP = X\left[\frac{T}{R}\right]$ @ T_{26} $R = 13"$

$X = .25$

$= .25\left[-\frac{460.42}{.955}\right]$

$= \underline{120.54 \frac{lb}{ft}}$

TOTAL BENDS = 398°

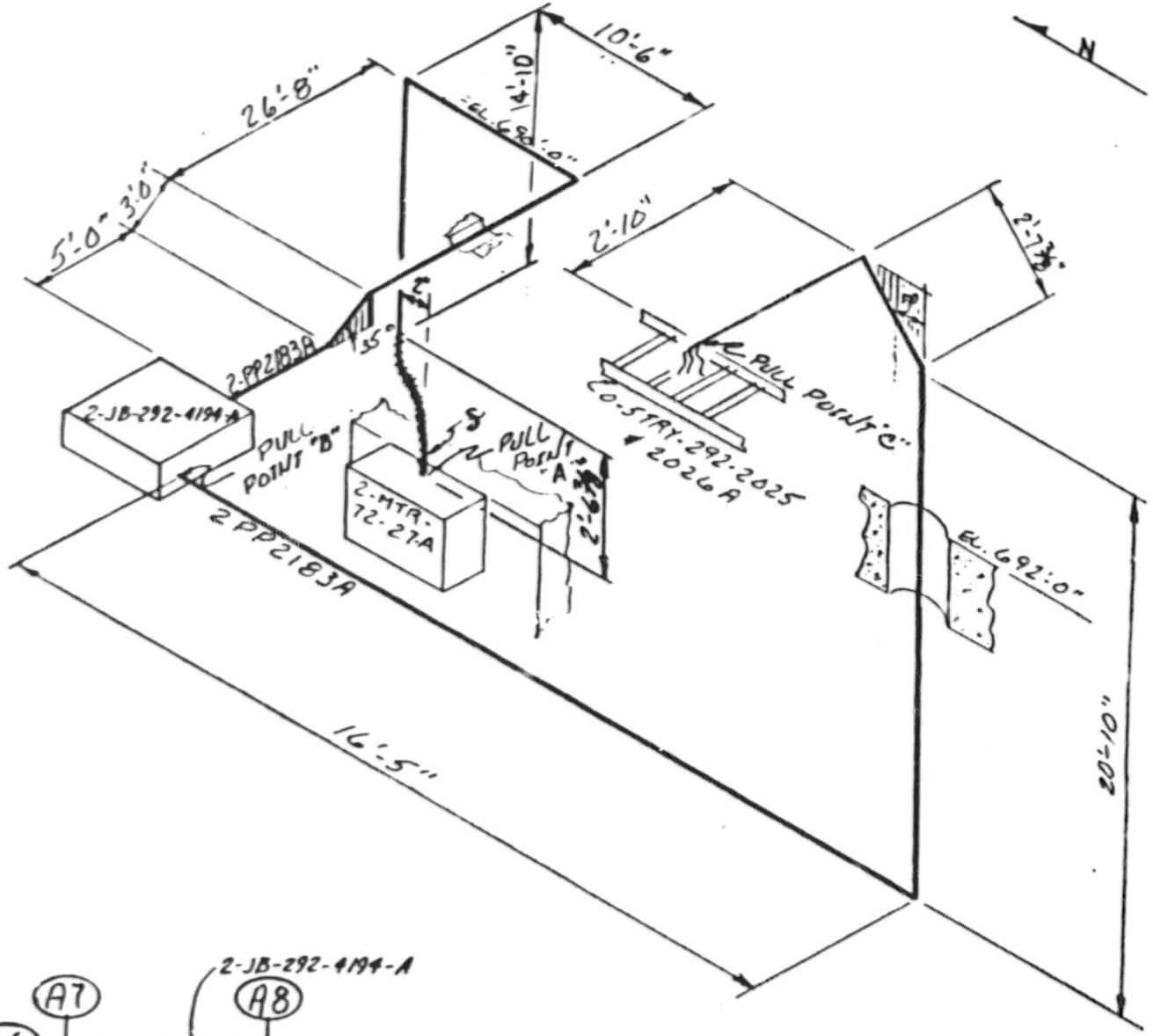

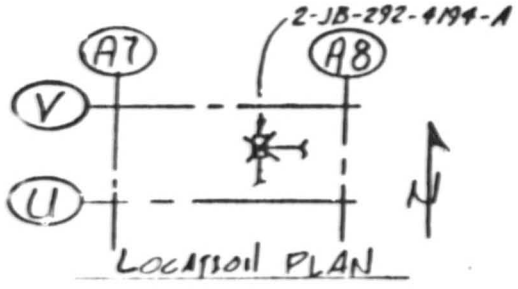

LOCATION PLAN

NOTES:

1. ALL BENDS HAVE A RADIUS OF 16" UNLESS OTHERWISE NOTED. (4"ØI CONDUIT)
2. TOLERANCES AS SPECIFIED BY EP 22.29
3. ALL BENDS NOT SPECIFIED ARE 90°
4.

CABLE UNID	MANUFACTURER
2PP625A	Rotek

5. REF. DWGS: 45N820-5, -8; 45N822-1, -12
6. ALL DIMENSIONS C TO C

AUX. BLDG UNIT 2

RACEWAY ISOMETRIC
DWG. EL. 676' & COND. 2PP2183A

WATTS BAR NUCLEAR PLANT
TVA/OC

ENGINEER:	DATE:
SHELBY STORY BRENDA TURNER	8-26-85

VERIFICATION: RAB

APPROVED:

DRAWING NO:		
E 2PP2183A	S.P.	R.0

OE:	QA:

OE & QA SIGNATURES INDICATE ACCEPTANCE TO "WORST CASE" CRITERIA.

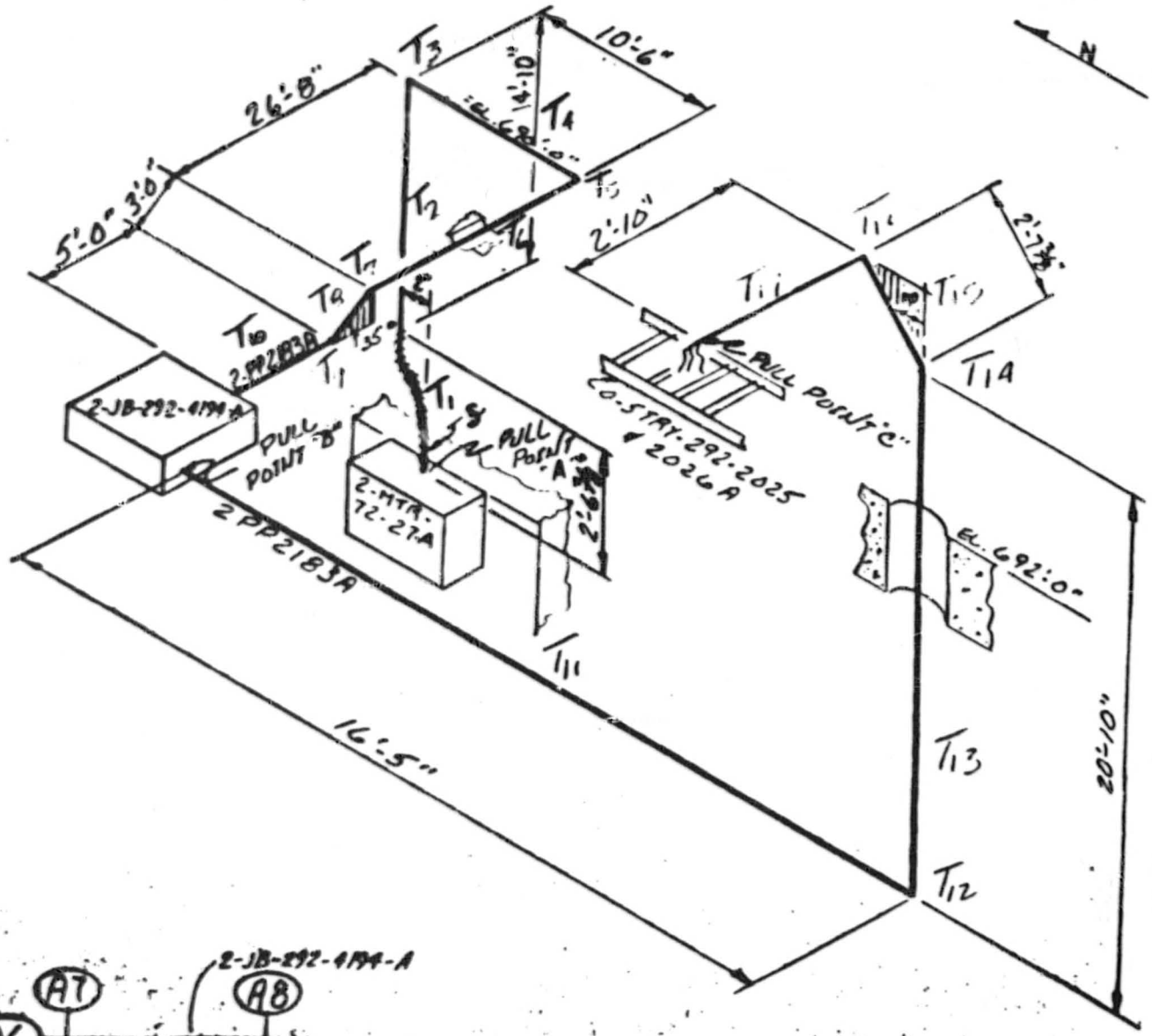

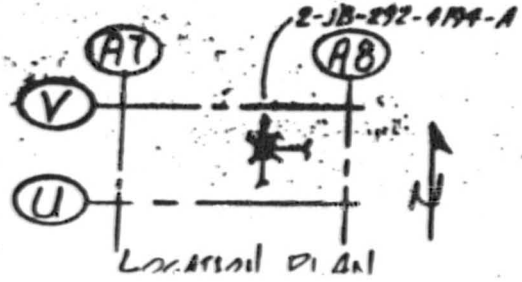

NOTES:

1. ALL BENDS HAVE A RADIUS OF 16" UNLESS OTHERWISE NOTED. (4"Ø I CONDUIT)
2. TOLERANCES AS SPECIFIED BY EP 22.29
3. ALL BENDS NOT SPECIFIED ARE 90°
4.

CABLE UNID	MANU-FACTURER
2PP625A	[illegible]

5. REF. DWGS: 45N820-[illegible]-8, 45N822-1, -12
6. ALL DIMENSIONS CL TO CL

AUX. BLDG UNIT 2

RACEWAY ISOMETRIC DWG. ELE. 676'-[illegible] 2PP2183A

WATTS BAR NUCLEAR PLANT TVA/OC

ENGINEER: SHELBA STORY, BRENDA TEWKER — DATE: 8-26-85

VERIFICATION: [illegible]

APPROVED: [illegible]

PROCEDURE NO: N/A EEB EP 22.29 SAMPLE PROCEDURE

OE & QA SIGNATURES INDICATE ACCEPTANCE TO "WORST CASE" CRITERIA ONLY.

OE: | QA:

CONDUIT 2PP2183A [4I] From pull point A to B
CABLE 2PP625A 3-1/C #2/0 WNB-1
[V5] 0.710 lb/ft O.D. = 1.117

COMPUTED AMS DATE 9/6/85
CHECKED JRB DATE 9-6-85

$W_t = (3)(0.71) = 2.13 \frac{lb}{ft}$

$\frac{D}{d} = \frac{4.03}{1.117} = 3.61$ (>2.5 : cradled configuration)

$W_c = 1.20$

$\underline{K} = KW_c = (0.3)(1.20) = 0.36$

SEGMENT	TYPE	ALGORITHM	TENSION
T_1	Up slope (90°) f	$T_1 = LW_t + \cancel{T_{in}}^{0}$	
		$= (2.53)(2.13)$	$= 5.39$
T_2	Up slope	$T_2 = LW_t + T_1$	
		$= (14.83)(2.13) + 5.39$	$= 36.99$
T_3	Vert bend (90°)	$T_3 = T_2 e^{\underline{K}b}$	
		$= 36.99e^{(0.36)(1.57)}$	$= 65.09$
T_4	Straight	$T_4 = LW_t \underline{K} + T_3$	
		$= (10.5)(2.13)(0.36) + 65.09 = 73.14$	
T_5	Horiz bend (90°)	$T_5 = T_4 e^{\underline{K}b}$	
		$= 73.14e^{(0.36)(1.57)}$	$= 128.71$
T_6	Straight	$T_6 = LW_t \underline{K} + T_5$	
		$= (26.67)(2.13)(0.36) + 128.71 = 149.16$	

TVA 11030 (WM-7-75)

COMPUTED RMS DATE 9/6/95
CHECKED JRB DATE 9-6-95

SEGMENT	TYPE	ALGORITHM	TENSION
T_7	Vert bend (35°)	$T_7 = T_6 e^{\underline{\mu}b}$	
		$= 149.16 e^{(0.36)(0.61)}$	$= 185.84$
T_8	Down slope (35°)	$T_8 = LW_t(\underline{K}\cos\alpha - \sin\alpha) + T_7$	
		$= (3)(2.13)(0.36\cos 35° - \sin 35°) + 185.84$	$= 184.06$
T_9	Vert bend (35°)	$T_9 = T_8 e^{\underline{\mu}b}$	
		$= 184.06 e^{(0.36)(0.61)}$	$= 229.26$
T_{10}	Straight	$T_{10} = LW_t \underline{K} + T_9$	
		$= (5)(2.13)(0.36) + 229.26$	$= 233.09$

$$SWP = \frac{1}{3}\left[3W_c - 2\right]\left[\frac{T}{R}\right] \qquad @\ T_9 \qquad R = 16" \ldots$$

$$= \frac{1}{3}\left[3(1.20) - 2\right]\left[\frac{229.26}{1.165}\right]$$

$$= \underline{104.95\ \frac{lb}{ft}}$$

TOTAL BENDS = 250°

TVA 11030 (WM-7-75)

CONDUIT 2PP2183A
CABLE 2PP625A

COMPUTED RMS DATE 9/6/85
CHECKED JRB DATE 9-6-85

$W_t = 2.13 \frac{lb}{ft}$

$W_c = 1.20$

$K = 0.36$

SEGMENT	TYPE	ALGORITHM	TENSION
T_{11}	Straight	$T_{11} = LW_t \underline{K} + \cancel{T_{in}}^{0}$	
		$= (16.42)(2.13)(0.36)$	$= 12.59$
T_{12}	Vert bend (90°)	$T_{12} = T_{11} e^{\underline{K}b}$	
		$= 12.59 e^{(0.36)(1.57)}$	$= 22.15$
T_{13}	Up slope (90°)	$T_{13} = LW_t + T_{12}$	
		$= (20.83)(2.13) + 22.15$	$= 66.53$
T_{14}	Vert bend (5°)	$T_{14} = T_{13} e^{\underline{K}b}$	
		$= 66.53 e^{(0.36)(0.09)}$	$= 68.65$
T_{15}	Up slope (85°)	$T_{15} = LW_t(\sin a + \underline{K} \cos a) + T_{14}$	
		$= (2.61)(2.13)(\sin 85° + 0.36 \cos 85°) + 68.65$	$= 74.36$
T_{16}	Vert bend (90°)	$T_{16} = T_{15} e^{\underline{K}b}$	
		$= 74.36 e^{(0.36)(1.57)}$	$= 130.89$
T_{17}	Straight	$T_{17} = LW_t \underline{K} + T_{16}$	
		$= (2.83)(2.13)(0.36) + 130.89$	$= 133.06$

TVA 11030 (WM-7-75)

COMPUTED RMS DATE 9/6/85
CHECKED JRB DATE 9-6-85

$$SWP = \frac{1}{3}\left[3W_c - 2\right]\left[\frac{T}{R}\right] \qquad @\ T_{16} \quad R = 16''$$

$$= \frac{1}{3}\left[3(1.20) - 2\right]\left[\frac{130.89}{1.165}\right]$$

$$= \underline{\underline{59.92\ \frac{lb}{ft.}}}$$

TOTAL BENDS = 185°

TVA 11030 (WM 7-75)

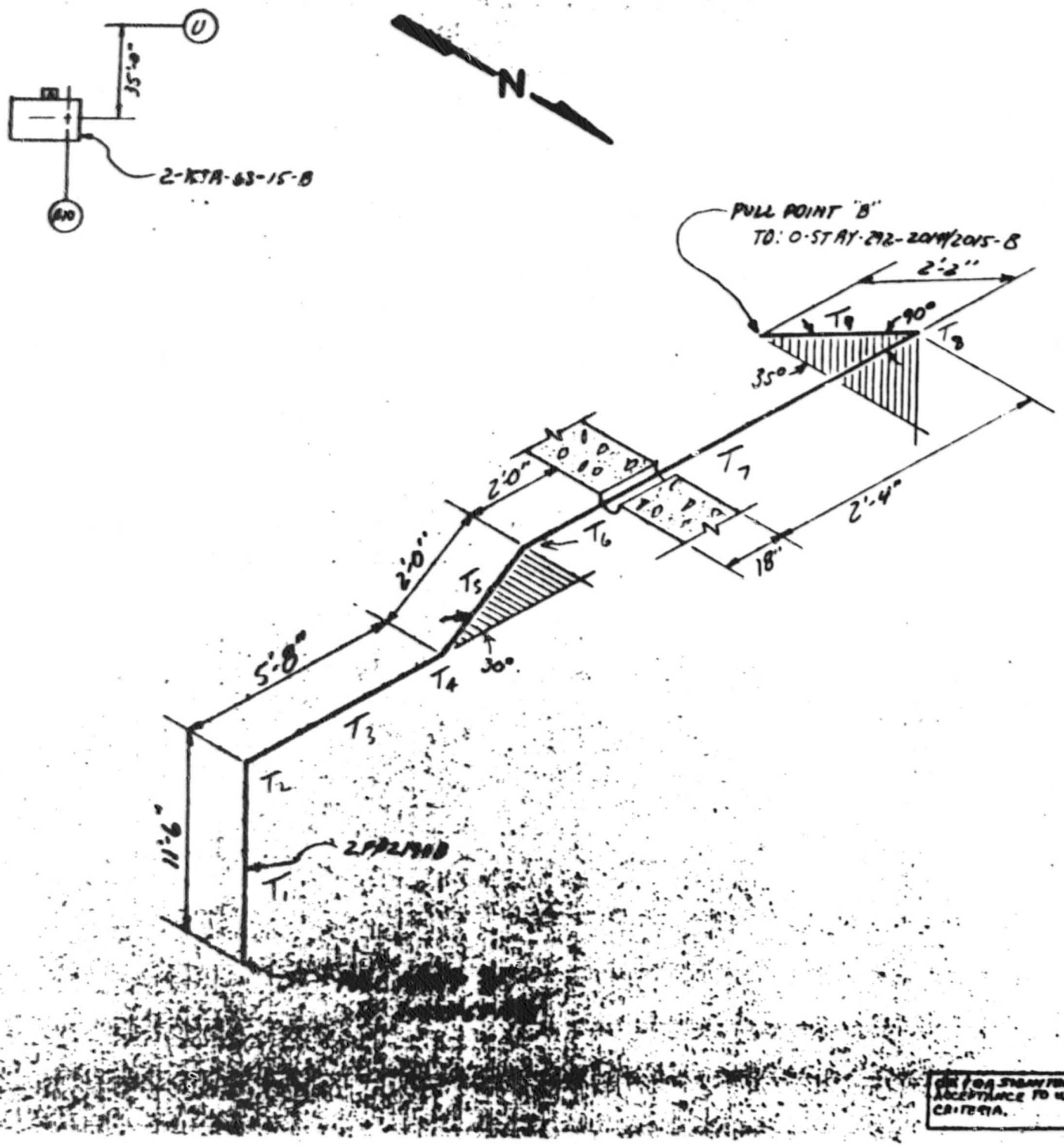

NOTES:

1. ALL BENDS HAVE A RADIUS OF 16" UNLESS OTHERWISE NOTED. (4I)

2. TOLERANCES AS SPECIFIED BY EP 22.29

3. ALL BENDS NOT SPECIFIED ARE 90°

4.

CABLE UNID	MANU-FACTURER
2PP612B	LATER
3-1/C # 2/0	WNB
NV5B (Pump Supply)	
OD = 1.117"	.710 #/ft

23% fill → 3x.71 = 2.13

5. REF. DWG #45N822-13

6. ALL DIMENSIONS CL TO CL

AUXILIARY BLDG. UNIT 2

RACEWAY ISOMETRIC
DWG. ELE. 692' COND. 02PP2190B

WATTS BAR NUCLEAR PLANT
TVA/OC

ENGINEER: W. D. Pekins | DATE: 8-23-85

VERIFICATION: Charles L. Cahain Jr.

APPROVED: [signature]

PROJECT NO: CAB-EP-22.29
SAMPLE PROGRAM

QA/QA SIGNATURES SIGNIFY ACCEPTANCE TO WORSE CASE CRITERIA.

QC: | QA:

CONDUIT 2PP-2190B (3 cables) SHEET 1 OF 1

$K = .3$, $W_t = 3 \times .71 = 2.13$,

$D/d = 4.03/1.117 = 3.61 > 2.5 \Rightarrow$ Cradle formation

+ from Appendix E curves, $W_c = 1.195$

Thus, $\underline{K} = W_c K = 1.195 \times .3 = .3585$

COMPUTED RHL DATE 8-28-85

CHECKED JRB DATE 8-29-85

PULL A to B (240°)

T_1 Vertical Straight (Up) $T = LW_t = 11.5 \times 2.13$
$= 24.50$ #

T_2 Vertical Bend (90°) $T = T_1 e^{\underline{K}b} = 24.5 e^{.36\pi/2} = 24.5 \times 1.76$
$= 43.02$ #

T_3 Horiz. Straight $T = \underline{K} L W_t + T_2 = .36 \times (5 + \frac{8}{12}) \times 2.13 + 43.02$
$= 47.34$ #

T_4 Horiz. Bend (30°) $T = T_3 e^{\underline{K}b} = 47.34 e^{.36\pi/6} = 47.34 \times 1.21$
$= 57.12$ #

T_5 Horiz. Straight $T = \underline{K} L W_t + T_4 = .36 \times 2 \times 2.13 + 57.12$
$= 58.65$ #

T_6 Horiz. Bend (30°) $T = T_5 e^{\underline{K}b} = 58.65 e^{.36\pi/6} = 58.65 \times 1.21$
$= 70.76$ #

T_7 Horiz. Straight $T = \underline{K} L W_t + T_6 = .36 \times (5 + \frac{10}{12}) \times 2.13 + 70.76$
$= 75.21$ #

T_8 Horiz. Bend (90°) $T = T_7 e^{\underline{K}b} = 75.21 e^{.36 \times \pi/2} = 75.21 \times 1.76$
$= 132.08$ #

T_9 Down Ramp (35°) $T = LW_t(\underline{K}\cos\alpha - \sin\alpha) + T_8$
$= (2 + 2/12) \times 2.13 \times (.36 \cos 35° - \sin 35°) + 132.0$
$= 130.79$ #

$SWP_{AB} = 1/3 \times (3W_c - 2) \times T_9/R = 1/3 \times (3 \times 1.195 - 2) \times 132.0 / 1.165$

$\boxed{SWP_{AB} = 59.90 \text{ \#/ft}}$ Worst Case!

PULL B to A is less significant due to a longer downward run; therefore neglect it

TVA 11030 (WM-7-75)