TVA 488 (EN DES 3-77)

CONDUIT 1PP21E2B NV5B SHEET 1 OF 2

$W_t = 3 \times .71 = 2.13$ $P/d = 4.03/1.117 = 3.60$ $W_c = 1.20$

$K = 0.3$ $\mu = 0.36$

COMPUTED KTS DATE 9-11-85

CHECKED JRB DATE 9-15-85

pull B to A

T_9 Horizontal 10'-9" $T = (10.75)(2.13)(0.36) = 8.21$

T_8 Bend 90° $T = 8.21\, e^{(1.57)(.36)} = 14.42$

T_7 Vertical 15'-8" up $T = 14.42 + (15.67)(2.13)(0.36)$
$T = 26.38$

T_6 Bend 21° $T = 26.38\, e^{(.36)(.37)} = 30.08$

T_5 Straight run 2'-4½" slope up 69° $T = 30.08 + (2.35)(2.13)(.36 \cos 69° + \sin 69°)$
$T = 35.41$

T_4 Bend 21° $T = 35.41\, e^{(.36)(.37)} = 40.38$

T_3 Vertical 4'-11" up $T = 40.38 + (4.92)(2.13)(0.36)$
$T = 44.14$

T_2 Bend 90° $T = 44.14\, e^{(.36)(1.57)}$
$T = 77.51$

T_1 Horizontal 23½" $T = 77.51 + (1.96)(2.13)(0.36)$
$T = 79.00$

$SWP = \frac{1}{3}(3 \times 1.20 - 2)\left(\frac{77.51}{1.165}\right) = 35.48$

pull C to B

T_{20} Vertical 5'-3" up $T = 5.25 \times 2.13 = 11.18$

T_{19} Bend 90° $T = 11.18\, e^{(.36)(1.57)} = 19.64$

T_{18} Horizontal 5'-9" $T = 19.64 + (5.75)(.36)(2.13)$
$T = 24.03$

T_{17} Bend 90° $T = 24.03\, e^{(1.57)(.36)}$
$T = 42.20$

TVA 488 (EN DES-3-77)

1PP2182B

COMPUTED KTS DATE 9-11-85
CHECKED JRB DATE 9-15-85

T_{16} Horizontal 16'-7½" $T = 42.20 + (16.63)(.36)(2.13)$
$T = 54.89$

T_{15} Bend 45° $T = 54.89 e^{(.36)(.79)} = 72.75$

T_{14} Straight run 3'-6¾"
slope down 45° $T = 72.75 + (3.56)(2.13)(.36 \cos 45° - \sin 45°)$
$T = 69.30$

T_{13} Bend 45° $T = 69.30 e^{(.36)(.79)} = 91.84$

T_{12} Horizontal 6'-11½" $T = 91.84 + (6.94)(2.13)(.36)$
$T = 97.14$

T_{11} Bend 180° $T = 97.14 e^{(.36)(3.14)}$
$T = 299.58$

T_{10} Horizontal 9'-11" $T = 299.58 + (9.92)(2.13)(.36)$
$T = 307.16$

$SWP = \frac{1}{3}(3 \times 1.2 - 2)\left(\frac{299.58}{1.165}\right) = 137.15$

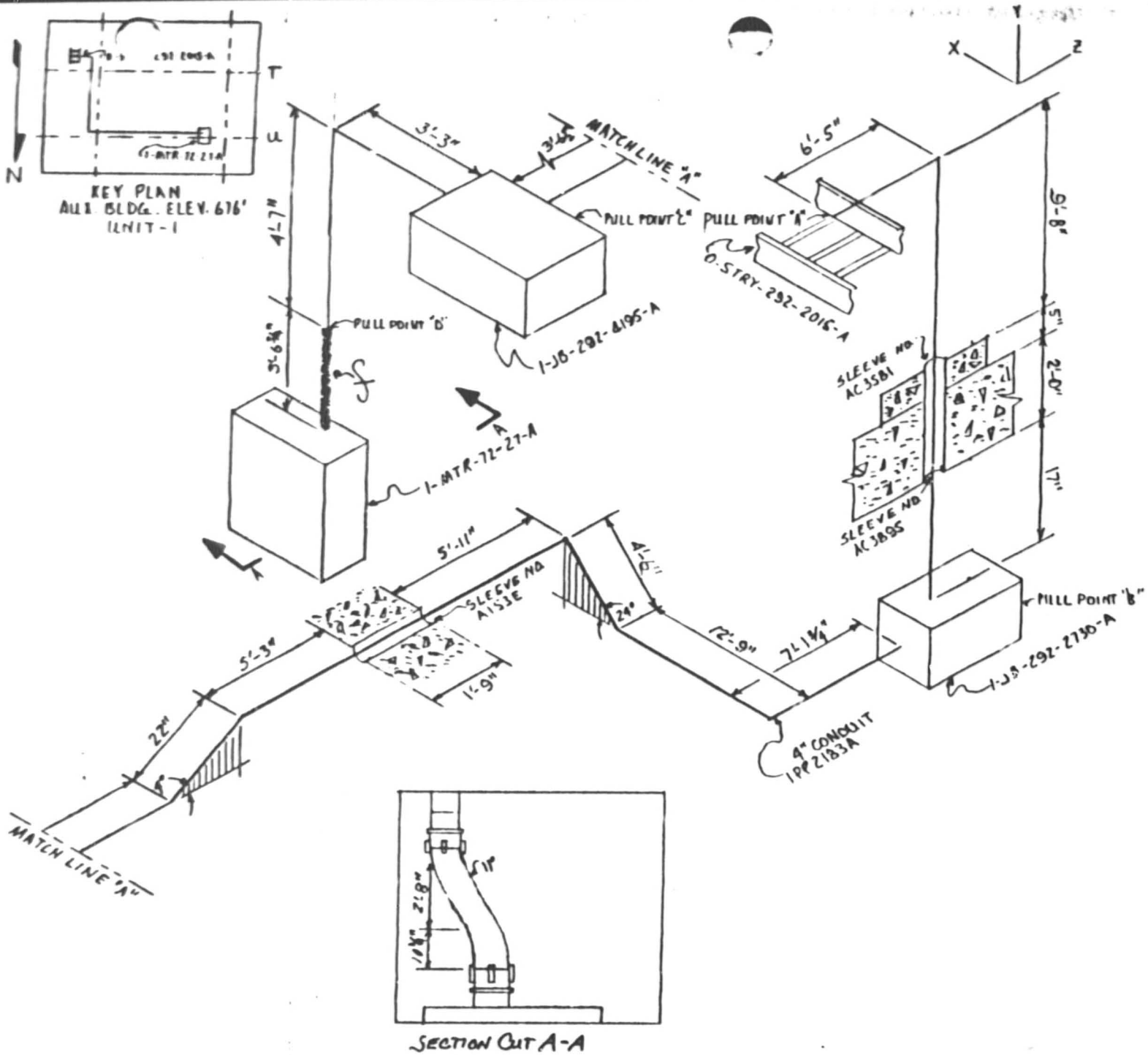

NOTES:

1. ALL BENDS HAVE A RADIUS OF 16" UNLESS OTHERWISE NOTED. (4" I) CONDUIT
2. TOLERANCES AS SPECIFIED BY EP 22 29
3. ALL BENDS NOT SPECIFIED ARE 90°
4.

CABLE UNID	MANU-FACTURER
1PP625A	LATER

5. REF. DWG #4SNB20-3,5,8 4SNB22-1,12
6. ALL DIMENSIONS CL TO CL

AUXILIARY BUILDING UNIT-1

RACEWAY ISOMETRIC DWG. ELE. 676' COND. #1PP2183A

WATTS BAR NUCLEAR PLANT TVA/OC

ENGINEER: Lawrence D. Jackson | DATE: 9-5-85

VERIFICATION: J W Pace

APPROVED: [signature]

DRAWING NO: E1PP2183A S.P. | R.0

OE & OA SIGNATURES SIGNIFY ACCEPTANCE TO "WORSE CASE" CRITERIA

OE: J.A. Bullard | OA: A.W. Rogers

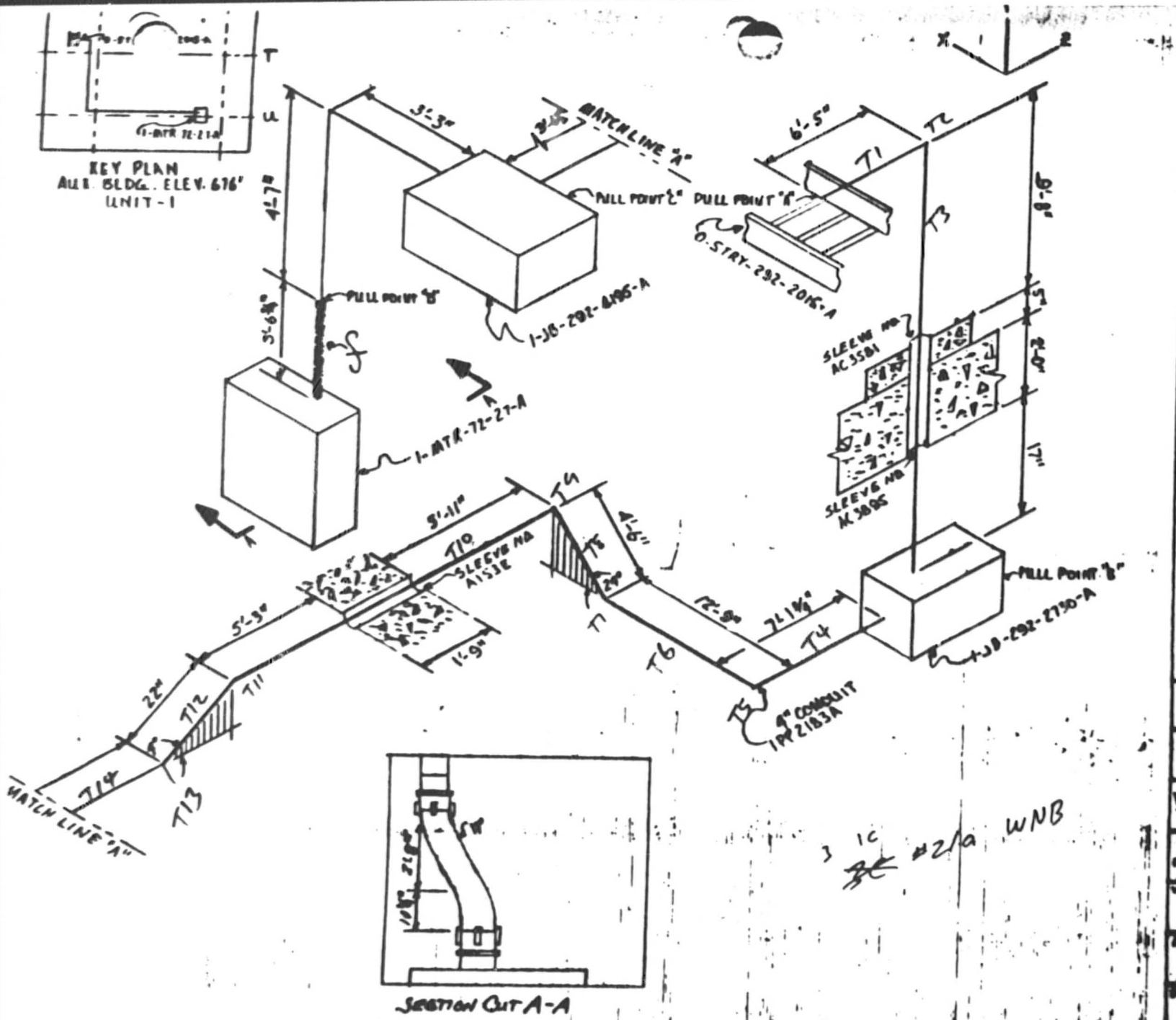

NOTES:

1. ALL BENDS HAVE A RADIUS OF 16" UNLESS OTHERWISE NOTED. (4"I) CONDUIT
2. TOLERANCES AS SPECIFIED BY EP 22.29
3. ALL BENDS NOT SPECIFIED ARE 90°
4.

CABLE UNID	MANU-FACTURER
1PP625A	LATER

5. REF. DWG. #4SN820-5,5,8 4SN822-1,12
6. ALL DIMENSIONS a.b.c.

AUXILIARY BUILDING UNIT-1

RACEWAY ISOMETRIC DWG. ELE. 676' COND. #1PP2183A

WATTS BAR NUCLEAR PLANT TVA/OC

9-5-85

SAMPLE PROGRAM

DE&GA SIGNATURES SIGNIFY ACCEPTANCE TO "HORSE CASE" CRITERIA

1PP2183A

TVA 488 (EN DES 3-77)

CONDUIT 1PP2183 NV4A

SHEET 1 OF 1

$w_t = .71 \times 3 = 2.13$ $D/d = 4.03/1.117 = 3.60$ $w_t = 1.195$

$\underline{K} = 1.195 \times .3 = .36$

COMPUTED KTS DATE 9-18-85

CHECKED JRB DATE 9-19-85

pull B → C

T_4 Horizontal 7'-1¾" $T = (7.15)(.36)(2.13)$
$= 5.46$

T_5 Bend 90° $T = 5.46e^{(1.57)(.36)} = 9.58$

T_6 Horizontal 12'-9" $T = 9.58 + (12.75)(.36)(2.13)$
$= 19.32$

T_7 Bend 24° $T = 19.32e^{(.36)(.42)} = 22.45$

T_8 Straight run 4'-6" slope up 24° $T = 22.45 + (4.5)(2.13)(.36\cos 24° + \sin 24°)$
$T = 29.49$

T_9 Bend 90° $T = 29.49e^{(1.57)(.36)} = 51.78$

T_{10} Horizontal 12'-11" $T = 51.78 + (12.92)(.36)(2.13)$
$T = 61.65$

T_{11} Bend 4° $T = 61.65e^{(.36)(.07)} = 63.21$

T_{12} Straight run 22" slope down 4° $T = 63.21 + (1.83)(2.13)(.36\cos 4° - \sin 4°)$
$T = 64.33$

T_{13} Bend 4° $T = 63.71e^{(.36)(.07)} = 64.82$

T_{14} Horizontal 3'-6½" $T = 64.82 + (3.54)(2.13)(.36)$
$T = 67.53$

$SWP = \frac{1}{3}(1.195 \times 3 - 2)\frac{64.82}{1.165} = 29.40$

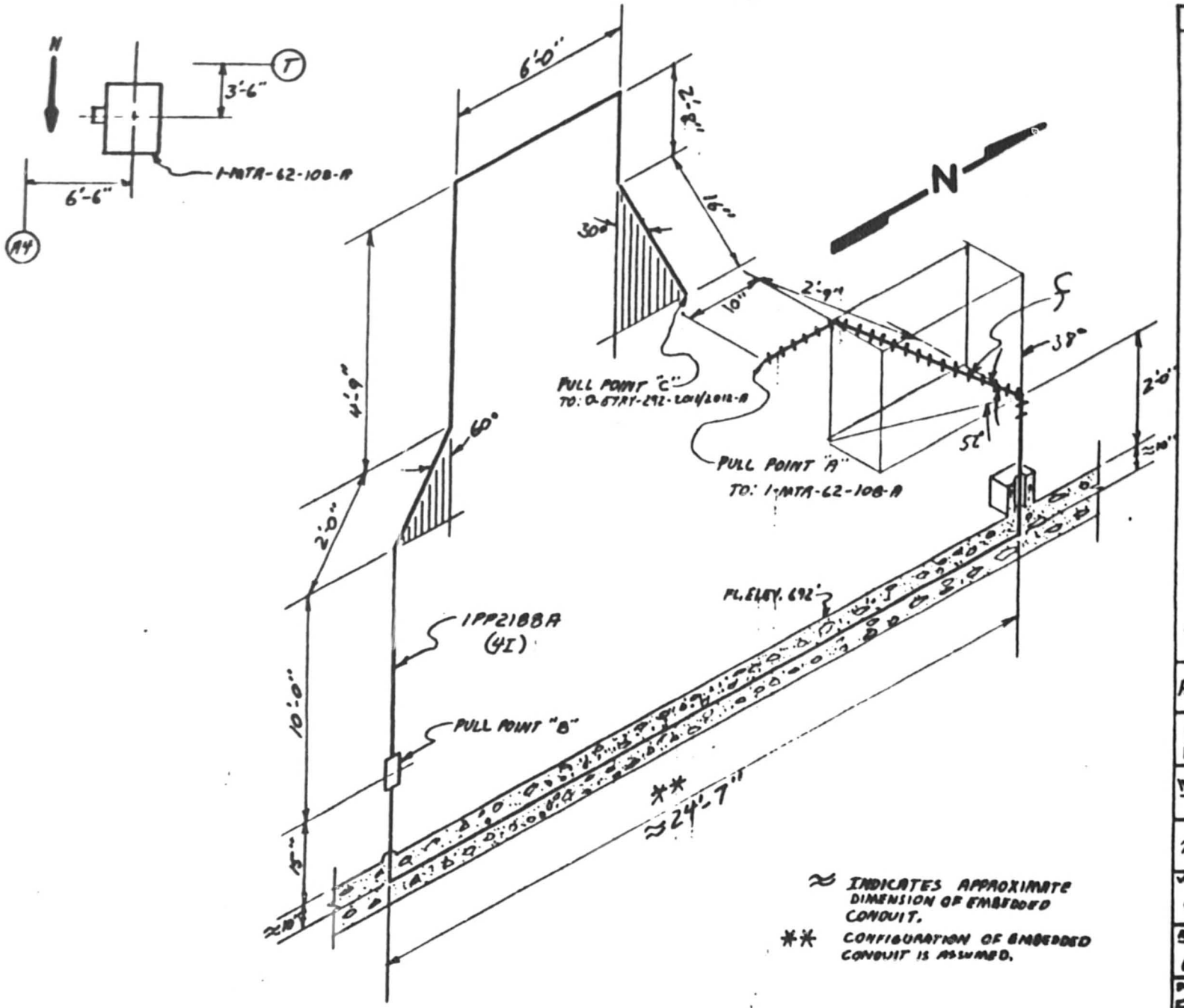

≈ INDICATES APPROXIMATE DIMENSION OF EMBEDDED CONDUIT.

** CONFIGURATION OF EMBEDDED CONDUIT IS ASSUMED.

NOTES:

1. ALL BENDS HAVE A RADIUS OF 16" UNLESS OTHERWISE NOTED. (4I)
2. TOLERANCES AS SPECIFIED BY EP22,29
3. ALL BENDS NOT SPECIFIED ARE 90°
4.

CABLE UNID	MANU-FACTURER
1PP550A	LATER

5. REF. DWG #45N822-11, 45N822-1, 45N822-6
6. ALL DIMENSIONS CL TO CL

AUXILIARY BUILDING - UNIT 1

RACEWAY ISOMETRIC DWG. ELE. 692' COND. #1PP2188A

WATTS BAR NUCLEAR PLANT
TVA/OC

ENGINEER: W. D. Pekin
DATE: 9-6-85

VERIFICATION: Charles R. Cohen Jr.

APPROVED: [signature]

DRAWING NO: E1PP2188A S.P.
R0

OE AND QA SIGNATURES SIGNIFY ACCEPTANCE TO "WORSE CASE" CRITERIA.

OE: Jim M. Mann
QA: A. W. Bogan 9/9/85

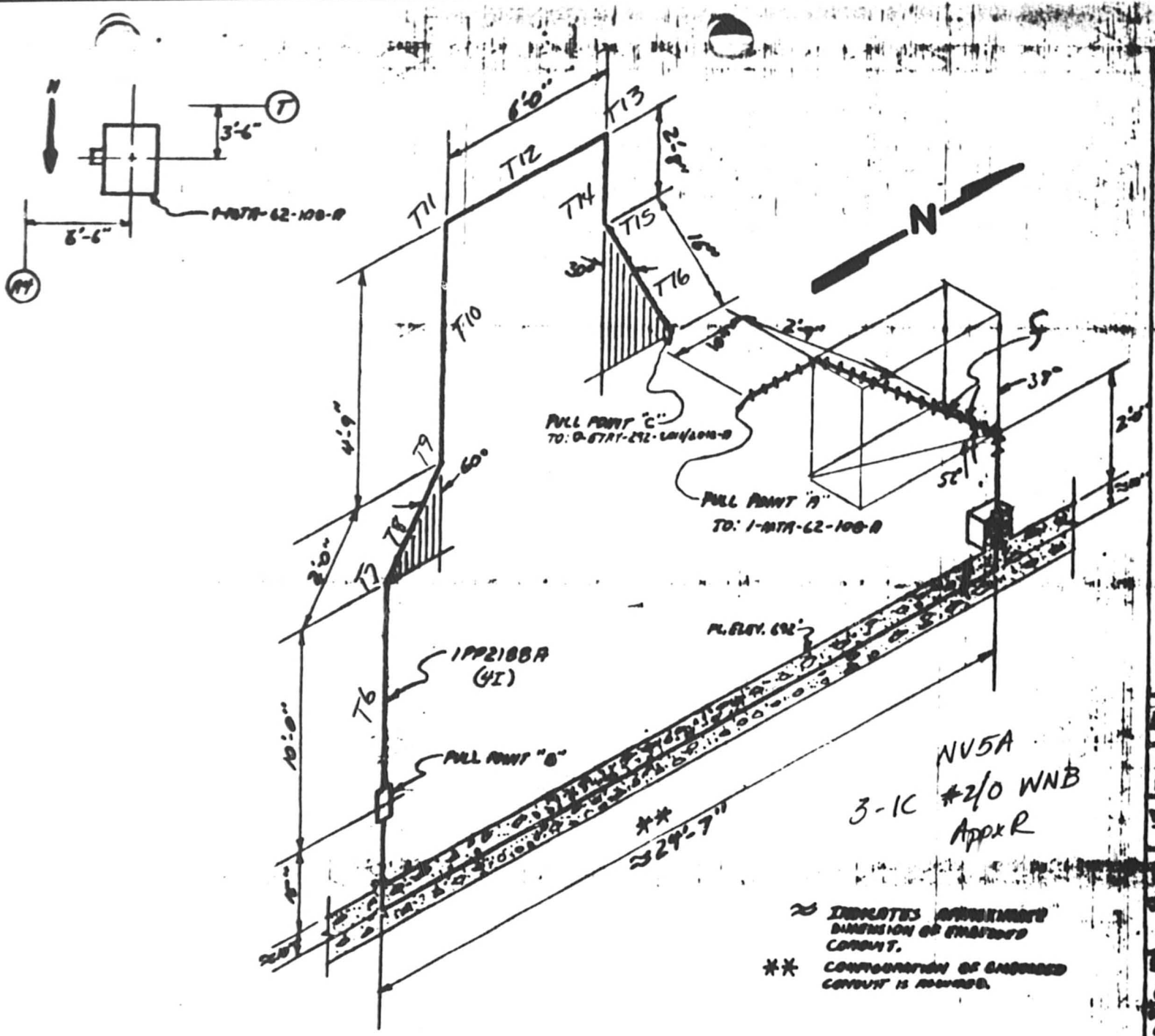

NOTES:

1. ALL BENDS HAVE A RADIUS OF 16" UNLESS OTHERWISE NOTED. (4I)
2. TOLERANCES AS SPECIFIED BY [illegible]22,29
3. ALL BENDS NOT SPECIFIED ARE 90°
4.

CABLE UNID	MANU-FACTURER
1PP850A	LATER

5. REF. DWG. [illegible]
6. ALL DIMENSIONS [illegible]

[illegible]

RACEWAY ISOMETRIC

[illegible] NUCLEAR PLANT

TVA/OC

[illegible]

[illegible]

[illegible]

[illegible]

[illegible]

[illegible] SIGNIFY ACCEPTANCE TO "WORST CASE" CRITERIA.

[illegible]

TVA 488 (EN DES 3-77)

1PP2188A NV5A SHEET 1 OF 1

$D/d = 4.03/1.117 = 3.61$ $w_c = 1.195$ $\mu = .36$

$w_t = 3 \times .710 = 2.13$

COMPUTED KTS DATE 5-17-85

CHECKED JRB DATE 9-19-95

pull B → C

T_6	Vertical 10'-0"	$T = 10 \times 2.13 = 21.30$
T_7	Bend 60°	$T = 21.30\, e^{(.36)(1.05)} = 31.00$
T_8	Straight run 2'-0" slope up 30°	$T = 31.00 + (2)(2.13)(.36\cos 30 + \sin 30)$ $T = 34.46$
T_9	Bend 60°	$T = 34.46\, e^{(.36)(1.05)} = 50.16$
T_{10}	Vertical 4'-9"	$T = 50.16 + (4.75)(2.13) = 60.27$
T_{11}	Bend 90°	$T = 60.27\, e^{(1.57)(.36)} = 106.12$
T_{12}	Horizontal 6'-0"	$T = 106.12 + (6)(2.13)(.36) = 110.72$
T_{13}	Bend 90°	$T = 110.72\, e^{(1.57)(.36)} = 194.95$
T_{14}	Vertical 2'-8"	$T = 194.95 - (2.67)(2.13) = 189.27$
T_{15}	Bend 30°	$T = 189.27\, e^{(.36)(.52)} = 228.55$
T_{16}	Straight run 16" slope down 60°	$T = 228.55 + \left(\frac{16}{12}\right)(2.13)(.36\cos 60 - \sin 60)$ $T = 226.60$

$SWP = \frac{1}{3}(3 \times 1.195 - 2)\,\frac{228.55}{1.195} = 103.65$

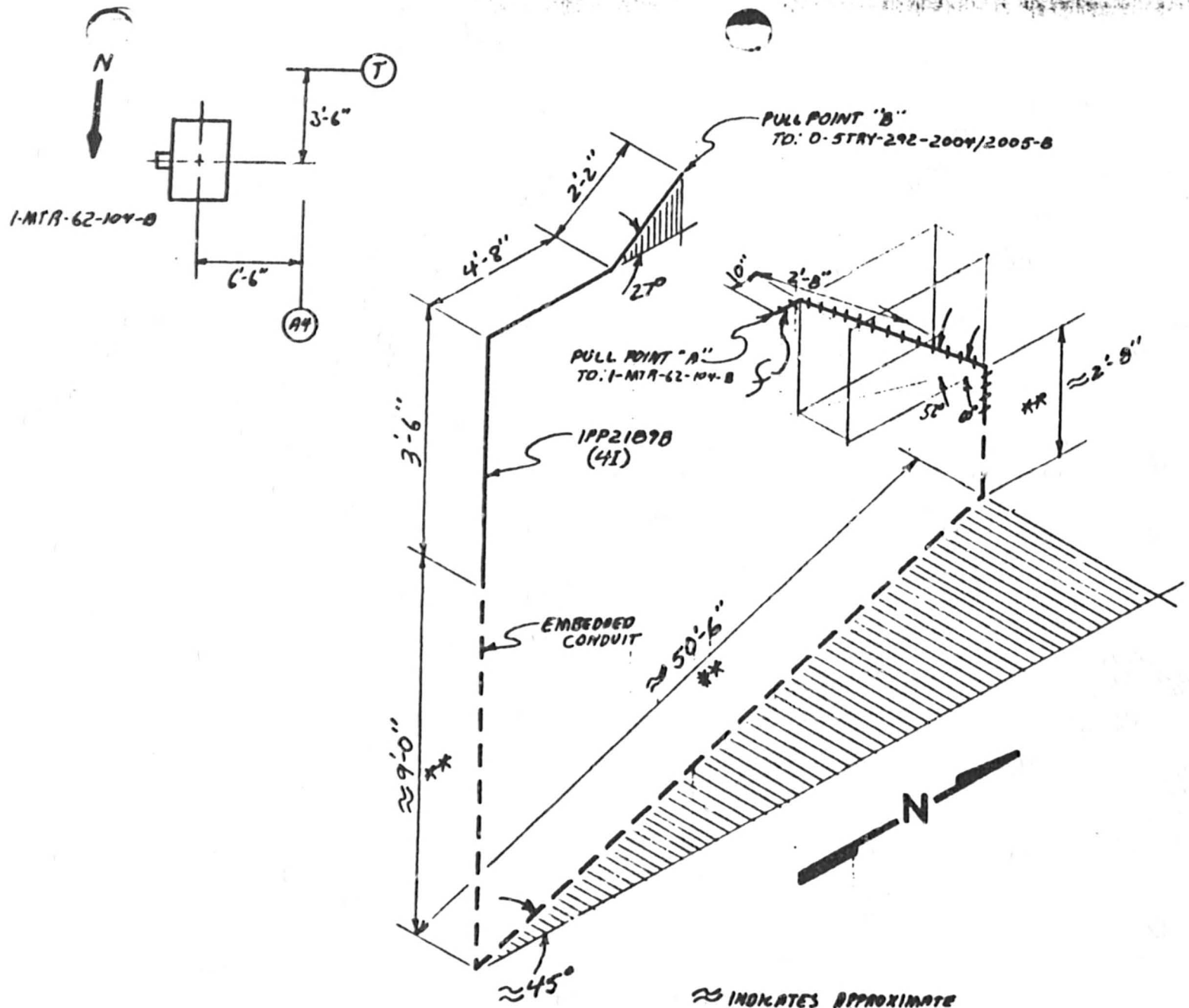

≈ INDICATES APPROXIMATE DIMENSION OF EMBEDDED CONDUIT.

** CONFIGURATION OF EMBEDDED CONDUIT IS ASSUMED.

NOTES:

1. ALL BENDS HAVE A RADIUS OF 16" UNLESS OTHERWISE NOTED. (4I)
2. TOLERANCES AS SPECIFIED BY EP22.29
3. ALL BENDS NOT SPECIFIED ARE 90°
4.

CABLE UNID	MANU-FACTURER
1PP562B	LATER

5. REF. DWG #45N822-1, 45N822-1, 45N822-6
6. ALL DIMENSIONS CL TO CL

AUX. BLDG. - UNIT 1

RACEWAY ISOMETRIC
DWG. ELE. 692' COND. #1PP2189B

WATTS BAR NUCLEAR PLANT
TVA/OC

ENGINEER: U.D. Perkins
DATE: 9-6-85

VERIFICATION: Charles L. Colvin Jr.

APPROVED: [signature]

OE AND QA SIGNATURES SIGNIFY ACCEPTANCE TO "WORSE CASE" CRITERIA

DRAWING NO.: E1PP2189B S.P. R.0

OE: Jim M. Mann
QA: T.W. Bogan 9/9/85

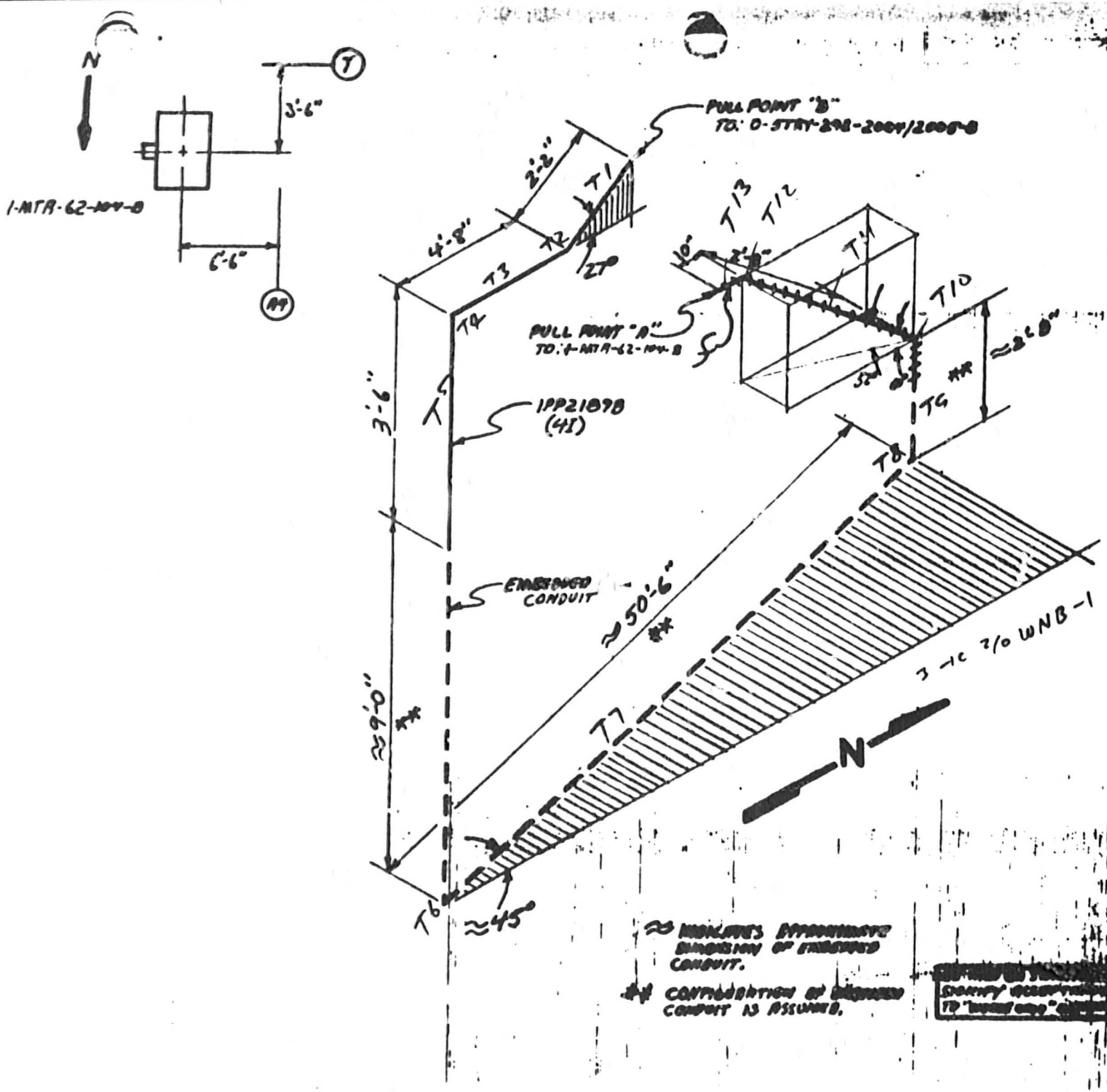

NOTES:

1. ALL BENDS HAVE A RADIUS OF 16" UNLESS OTHERWISE NOTED. (4I)
2. TOLERANCES AS SPECIFIED BY SP22.29
3. ALL BENDS NOT SPECIFIED ARE 90°
4.

CABLE UNID	MANU-FACTURER
1PP562B	LATER

5. REF. DWG [illegible]
6. ALL DIMENSIONS [illegible]

AUX. BLDG. - UNIT 1

RACEWAY ISOMETRIC
DWG. [illegible]

WATTS BAR NUCLEAR PLANT
TVA/OC

[illegible] 9-6-85

Charles L. Colvin Jr.

[illegible]

SIGNIFY ACCEPTANCE TO "[illegible]"

SAMPLE PROGRAM

[illegible]

1PP2189B

TVA 488 (EN DES 3-77)

CONDUIT 1PP21E5B NV5B

SHEET 7 OF 1

$D/d = 4.03/1.117 = 3.61$ $w_c = 1.195$

$w_e = .71 \times 3 = 2.13$ $\mu = .36$

$R = \frac{16}{12} = 1.33$

COMPUTED KTS DATE 9-12-85

CHECKED JRB DATE 9-15-85

pull A → B

Assume pull to $T_5 = 200$

T_7 Horizontal 50'-6" $T = 50.5 \times 2.13 \times .36 = 38.56$

T_6 Bend 90° $T = 38.56 \times e^{(1.57)(.36)} = 67.72$

T_5 Vertical 12'-6" $T = 67.72 + (12.5)(2.13) = 94.35$

T_4 Bend 90° $T = 94.35\, e^{(1.57)(.36)} = 165.69$

T_3 Horizontal 4'-8" $T = 165.69 + (4.67)(2.13)(.36)$
$T = 169.25$

T_2 Bend 27° $T = 169.25\, e^{(.36)(.47)} = 200.40$

T_1 Straight run 7'-2" $T = 200.40 + (7.17)(2.13)(.36 \cos 27° + \sin 27°)$
slope up 27° $T = 203.97$

$SWP = \frac{1}{3}(3 \times 1.195 - 2)\frac{200.40}{1.165} = 90.88$

pull B → A

Assume $T_8 = 0$

T_7 Horizontal 50'-6" $T = 50.5 \times 2.13 \times .36 = 38.56$

T_8 Bend 90° $T = 38.56\, e^{(1.57)(.36)} = 67.72$

T_4 Vertical 6'-2" $T = 67.72 + (6.17)(2.13) = 80.86$

$SWP = \frac{1}{3}(3 \times 1.195 - 2)\frac{67.72}{1.165} = 30.71$

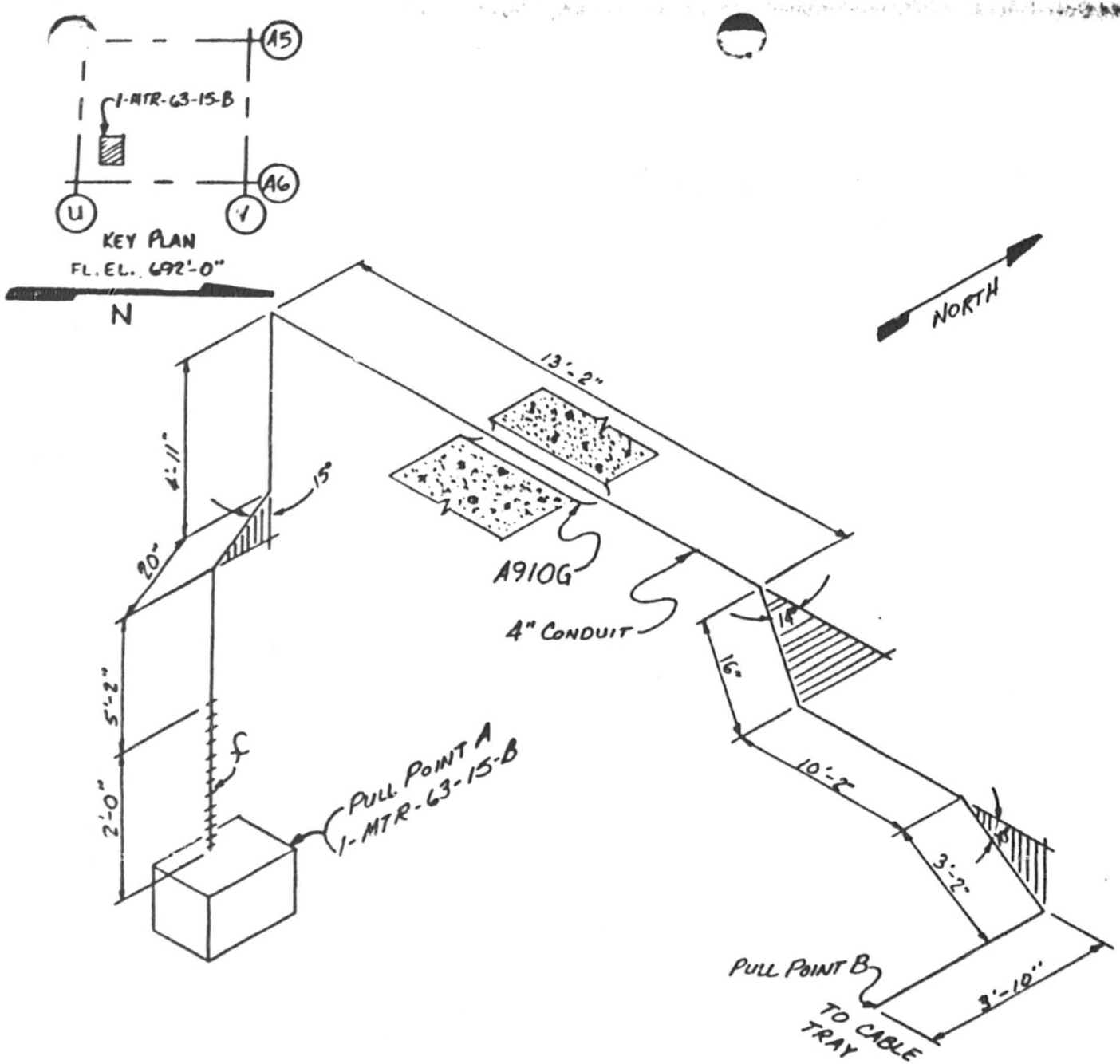

NOTES:

1. ALL BENDS HAVE A RADIUS OF 16" UNLESS OTHERWISE NOTED. (4"I)

2. TOLERANCES AS SPECIFIED BY EP 22.29

3. ALL BENDS NOT SPECIFIED ARE 90°

4.

CABLE UNID	MANU-FACTURER
1PP612B	LATER

5. REF. DWG # 45N822-12,8

6. ALL DIMENSIONS CL TO CL

AUX. BLDG.-UNIT 1

RACEWAY ISOMETRIC
DWG. ELE. 692 COND. # 1PP2190B

WATTS BAR NUCLEAR PLANT
TVA/OC

ENGINEER: Charles L. Colvin Jr. DATE: 9-6-85

VERIFICATION: W.D. Pekins 9-6-85

APPROVED:

DRAWING NO: E1PP2190B S.P. R.O.

OE AND QA SIGNATURES INDICATE ACCEPTANCE TO "WORSE CASE" CRITERIA.

OE: Joyce I. Fenner QA: A.W. Rogers 9/4/85

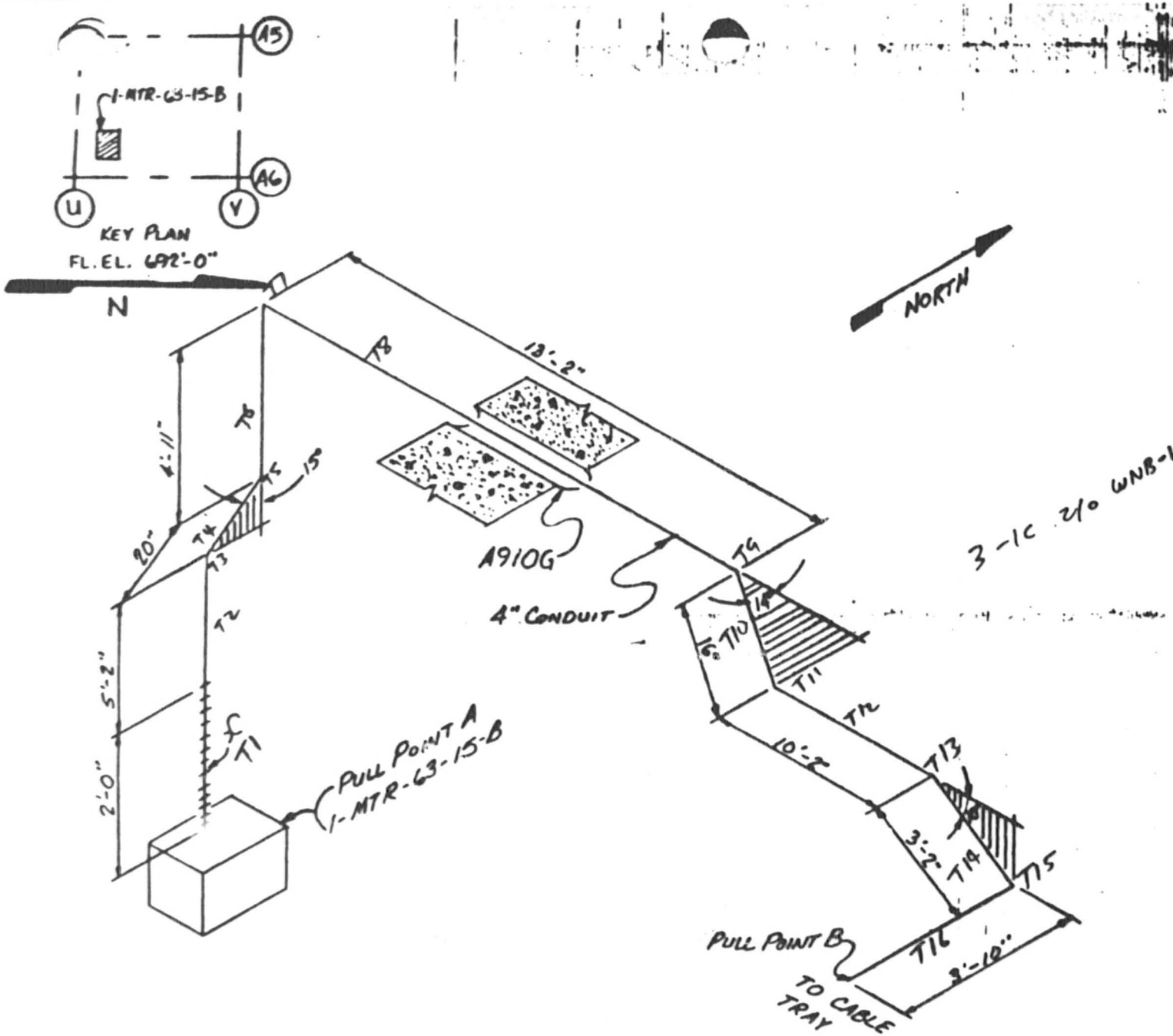

NOTES:

1. ALL BENDS HAVE A RADIUS OF 16" UNLESS OTHERWISE NOTED. (4I)

2. TOLERANCES AS SPECIFIED BY EP 22.29

3. ALL BENDS NOT SPECIFIED ARE 90°

4.

CABLE UNID	MANU-FACTURER
1PP6128	LATER

5. REF. DWG # 45N822-12,8

6. ALL DIMENSIONS C to C

AUX. BLDG.-UNIT

RACEWAY ISOMETRIC DWG. ELE. 692 COND. # 1PP2190B

WATTS BAR NUCLEAR PLANT TVA/OC

ENGINEER: Charles L. Colmin Jr. DATE: 9-6-85

VERIFICATION: W.D. Pelkins 9-6-85

APPROVED:

PERSONNEL ID: NA EEB-EP 22.29 SAMPLE PROGRAM

OE: QA: 9/4/85

OE AND QA SIGNATURES INDICATE ACCEPTANCE TO "WORSE CASE" CRITERIA.

1PP2190B

TVA 488 (EN DES 3-77)

CONDUIT 1PP 2190 B NV5B

SHEET 1 OF 3

$D/d = 4.03/1.117 = 3.61$ $\quad w_c = 1.195$

$w_t = 3 \times .710 = 2.13$ $\quad K = .36$

COMPUTED KTS DATE 9-12-85

CHECKED JRB DATE 9-15-85

pull A → B

T_1 Vertical 2'-0" $\quad T = (2)(2.13) = 4.26$

T_2 Vertical 5'-2" $\quad T = (5.17)(2.13) + 4.26 = 15.26$

T_3 Bend 15° $\quad T = 15.26\, e^{(.36)(.26)} = 16.77$

T_4 Straight run 20" slope up 75° $\quad T = 16.77 + (1.67)(2.13)(.36\cos 75° + \sin 75°)$
$T = 20.53$

T_5 Bend 15° $\quad T = 20.53\, e^{(.36)(.26)} = 22.55$

T_6 Vertical 4'-11" $\quad T = 22.55 + (4.92)(2.13) = 33.02$

T_7 Bend 90° $\quad T = 33.02\, e^{(.36)(1.57)} = 57.98$

T_8 Horizontal 13'-2" $\quad T = 57.98 + (13.17)(2.13)(.36)$
$T = 68.04$

T_9 Bend 14° $\quad T = 68.04\, e^{(.36)(.24)} = 74.27$

T_{10} Horizontal 16" $\quad T = 74.27 + \left(\frac{16}{12}\right)(2.13)(.36)$
$T = 75.29$

T_{11} Bend 14° $\quad T = 75.29\, e^{(.36)(.24)} = 82.18$

T_{12} Horizontal 10'-2" $\quad T = 82.18 + (10.17)(2.13)(.36)$
$T = 89.94$

T_{13} Bend 10° $\quad T = 89.94\, e^{(.36)(.17)} = 95.75$

T_{14} Straight run 3'-2" slope down 10° $\quad T = 95.75 + (3.17)(2.13)(.36\cos 10° - \sin 10°)$
$T = 96.96$

T_{15} Bend 90° $\quad T = 96.96\, e^{(.36)(1.57)}$
$T = 170.28$

TVA 488 (EN DES-3-77)

IPP 2190B

COMPUTED KTS DATE 9-12-85
CHECKED JRB DATE 9-15-85

T_{16} Horizontal 3'-10" $T = 170.28 + (3.83)(2.13)(.36)$
$T = 173.20$

$SWP = \frac{1}{3}(3 \times 1.165 - 2)\frac{170.28}{1.165} = 77.22$

pull B → A

T_{16} Horizontal 3'-10" $T = (3.83)(2.13)(.36) = 2.93$

T_{15} Bend 90° $T = 2.93e^{(1.57)(.36)} = 5.14$

T_{14} Straight run 3'-2" slope up 10° $T = 5.14 + (3.17)(2.13)(.36\cos 10° + \sin 10°)$
$T = 8.69$

T_{13} Bend 10° $T = 8.69e^{(.36)(.17)} = 9.25$

T_{12} Horizontal 10'-2" $T = 9.25 + (10.17)(2.13)(.36) = 17.02$

T_{11} Bend 14° $T = 17.02e^{(.36)(.24)} = 18.58$

T_{10} Horizontal 16" $T = 18.58 + (\frac{16}{12})(2.13)(.36) = 19.59$

T_9 Bend 14° $T = 19.59e^{(.36)(.24)} = 21.39$

T_8 Horizontal 13'-2" $T = 21.39 + (13.17)(2.13)(.36) = 31.44$

T_7 Bend 90° $T = 31.44e^{(1.57)(.36)} = 55.22$

T_6 Vertical 4'-11" $T = 55.22 - (4.92)(2.13) = 44.74$

T_5 Bend 15° $T = 44.74e^{(.36)(.26)} = 49.15$

T_4 Straight run 20" slope down 75° $T = 49.15 + (\frac{20}{12})(2.13)(.36\cos 75° - \sin 75°)$
$T = 46.05$

T_3 Bend 15° $T = 46.05e^{(.36)(.26)} = 50.58$

TVA 488 (EN DES-3-77)

LPP 2190 B

COMPUTED KTS DATE 9-12-85

CHECKED JRB DATE 9-15-85

T_2 : Vertical 5'-2"

$T = 50.58 - (5.17)(2.13)$

$T = 39.57$

T_1 Vertical 2'-0"

$T = 39.57 - (2)(2.13)$

$T = 35.31$

SWP at T_2 $= \frac{1}{3}(3 \times 1.185 - 2)\left(\frac{50.58}{1.765}\right)$

$=$ [redacted]

$= 22.44$

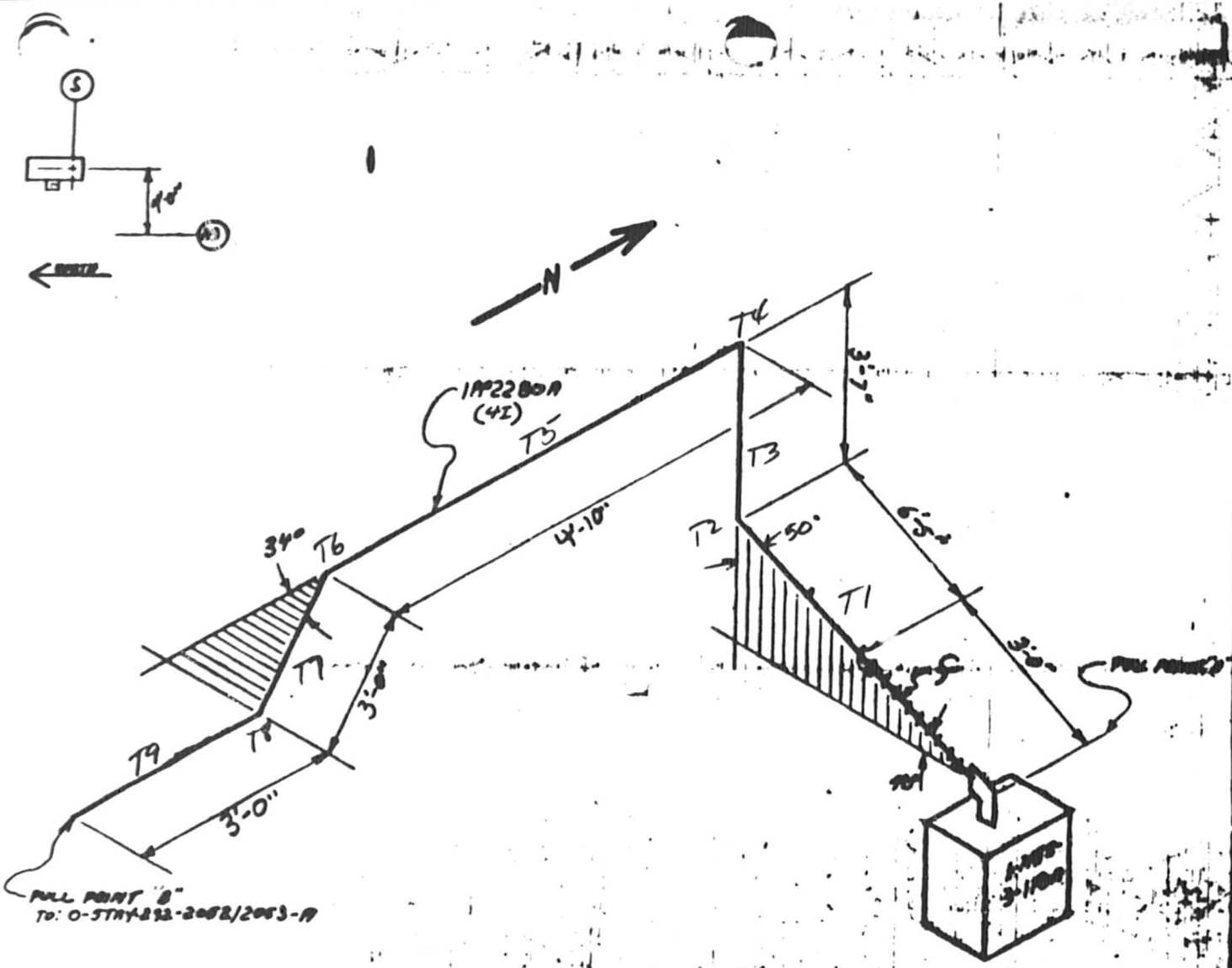

NV5A
3-1C 2/0 WNB
APPX R

NOTES:

1. ALL BENDS HAVE A RADIUS OF 16" UNLESS OTHERWISE NOTED. (4I)
2. TOLERANCES AS SPECIFIED BY EP22.29.
3. ALL BENDS NOT SPECIFIED ARE 90°
4.

CABLE UNID	MANU-FACTURER
1PP650A	LATER

5. REF. DWG [illegible]
6. ALL DIMENSIONS [illegible]

[illegible]

RACEWAY ISOMETRIC
[illegible]

[illegible]
TVA/DC

[illegible]

Charles L. Colvin Jr.

[illegible]

[illegible]

[illegible]

[illegible]

G. W. [illegible]

TVA 488 (EN DES 3-77)

CONDUIT IPP 2280 A NVSA

SHEET 1 OF 1

$D/d = 4.03/1.117 = 3.61$ $w_c = 1.195$ $K = .36$

$w_t = 3 \times .710 = 2.13$

COMPUTED KTS DATE 9-17-85

CHECKED JRB DATE 9-19-85

pull A → B

T_1 Straight run 9'-5" slope up 40° $T = (5.42)(2.13)(.36\cos 40 + \sin 40)$ $T = 18.40$

T_2 Bend 50° $T = 18.40\, e^{(.36)(.87)} = 25.16$

T_3 Vertical 3'-7" $T = 25.16 + (3.58)(2.13) = 32.79$

T_4 Bend 90° $T = 32.79\, e^{(.36)(1.57)} = 57.59$

T_5 Horizontal 4'-10" $T = 57.59 + (4.83)(.36)(2.13)$ $T = 61.28$

T_6 Bend 34° $T = 61.28\, e^{(.36)(.59)} = 75.81$ $T = 75.81$

T_7 Horizontal 3'-0" $T = 75.81 + (3)(2.13)(.36) = 78.10$

T_8 Bend 34° $T = 78.10\, e^{(.36)(.59)} = 96.61$

T_9 Horizontal 3'-0" $T = 96.61 + (3)(2.13)(.36) = 98.90$

$\Sigma wp = \frac{1}{2}(3 \times 1.195 - 2)\left(\frac{96.61}{1.165}\right) = 43.81$

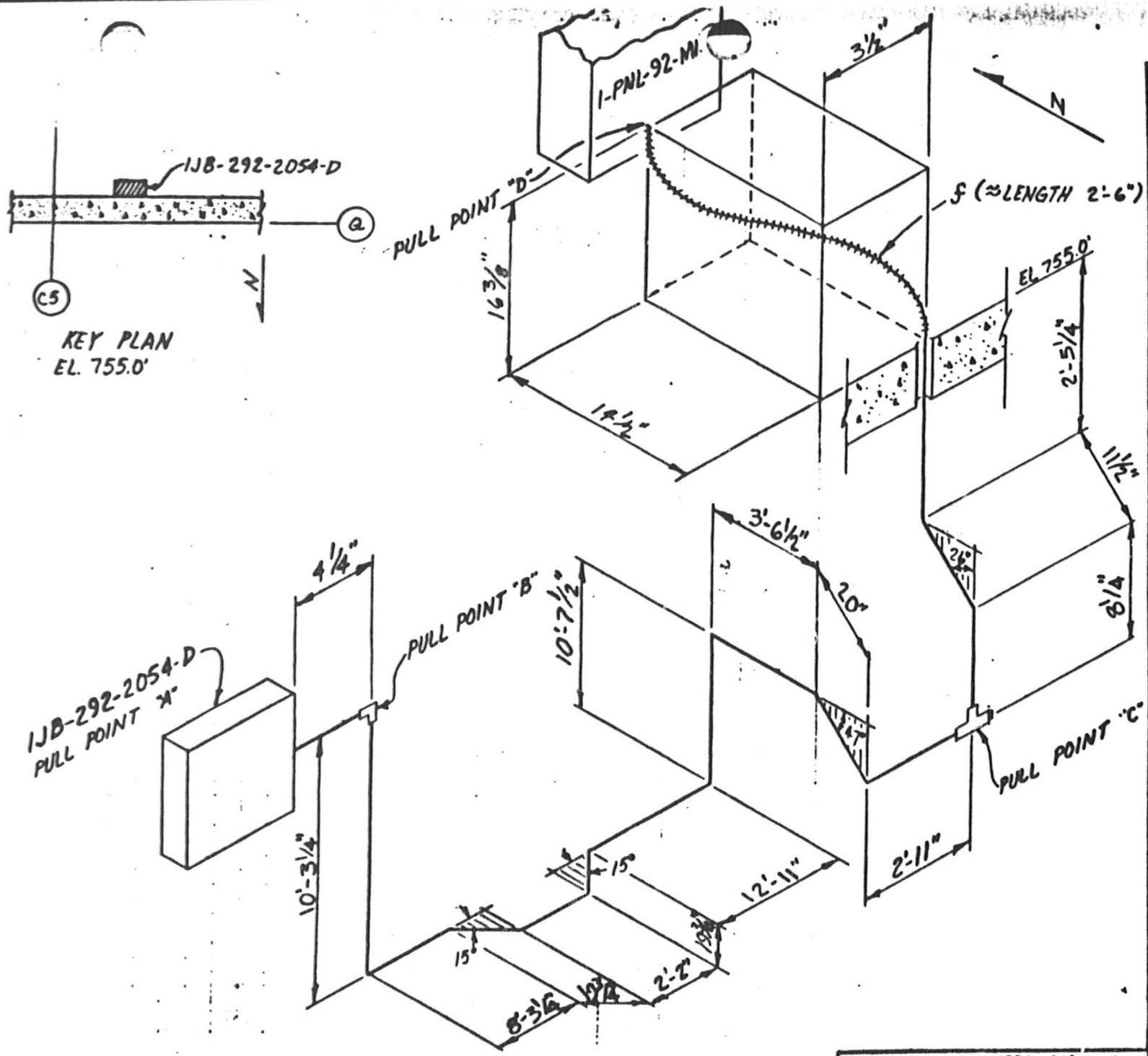

NOTES:

1. ALL BENDS HAVE A RADIUS OF 9½" UNLESS OTHERWISE NOTED. (2" Ø I CONDUIT)
2. TOLERANCES AS SPECIFIED BY E.P. 22.29
3. ALL BENDS NOT SPECIFIED ARE 90°
4.

CABLE UNID	MANU-FACTURER
1PV11D 1PV13D	Later ↓

5. REF. DWGS: 45W814-10,-11
6. ALL DIMENSIONS ℄ to ℄

CONTROL BLDG. UNIT 1

RACEWAY ISOMETRIC DWG. ELE. 741' COND. Ø1PV961D

WATTS BAR NUCLEAR PLANT TVA/OC

ENGINEER: Roger A. Brown | DATE: 8-30-85

VERIFICATION: J.W. Nance

APPROVED: [signature]

DRAWING NO: E1PV961D S.P. | R.0

OE & QA SIGNATURES SIGNIFY ACCEPTANCE TO "WORST CASE" CRITERIA.

OE: [signature] | QA: A.W. Rogers

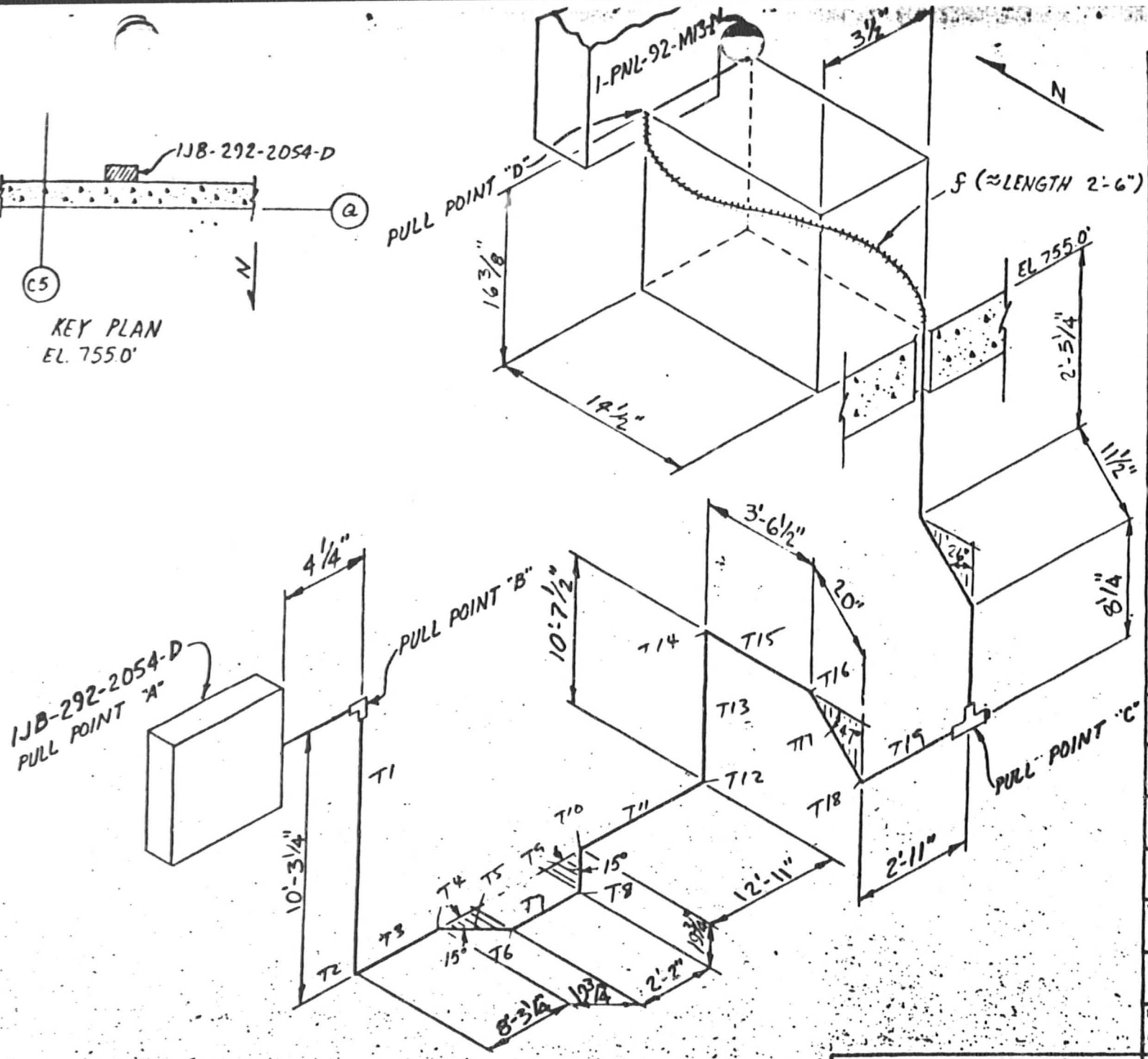

NOTES:

1. ALL BENDS HAVE A RADIUS OF 9½" UNLESS OTHERWISE NOTED. (2" Ø I CONDUIT)
2. TOLERANCES AS SPECIFIED BY E.P. 22.29
3. ALL BENDS NOT SPECIFIED ARE 90°
4.

CABLE UNID	MANU-FACTURER	
1PV11D WLN	Later	2/c 10
1PV13D WLN	↓	2/c 10

5. REF. DWGS: 45W814-10,-11
6. ALL DIMENSIONS ℄ to ℄

CONTROL BLDG. UNIT 1

RACEWAY ISOMETRIC DWG. ELE. 741' CONT. #1PV961D

WATTS BAR NUCLEAR PLANT TVA/OC

ENGINEER: Roger A. Brown

DATE: 8-30-85

VERIFICATION:

APPROVED:

DRAWING NO: N/A EEB EP 22.29 SAMPLE PROGRAM

OE & QA SIGNATURES SIGNIFY ACCEPTANCE TO "WORST CASE" CRITERIA.

OE:

QA:

1PV961D

TVA 488 (EN DES-3-77)

CONDUIT 1PV961D (2 CABLES) NV3D SHEET 1 OF 4

$K = 0.3$ $D/d = 2.07/.492 = 4.20$

$W_c = 1.05$ $W_b = 2 \times 0.2 = 0.4$

$\mu = 0.315$ ~~[illegible]~~

COMPUTED KTS DATE 9-7-85

CHECKED JRB DATE 9-17-85

PULL B to C

T_1 : Vertical Down 10'-3 1/4" $T_1 = -(10.27)(0.4)$

$T_1 = -4.11$

Assume T_1 = zero

T_3 Horizontal 8'-3 1/8" $T_3 = (.315)(8.27)(0.4)$

$T = 1.04$

T_4 Bend 15° $T = 1.04\, e^{(.315)(.262)}$

$T = 1.13$

T_5 Horizontal 1'-7 3/4" $T = 1.13 + (1.65)(0.4)(.315)$

$T = 1.34$

T_6 Bend 15° $T = 1.34\, e^{(.315)(.262)}$

$T = 1.45$

T_7 Horizontal 2'-2" $T = 1.45 + (2.17)(.315)(0.4)$

$T = 1.73$

T_8 Bend 15° $T = 1.73\, e^{(.315)(.262)}$

$T = 1.88$

T_9 Horizontal 1'-7 3/4" $T = 1.88 + (1.65)(0.4)(.315)$

$T = 2.08$

T_{10} Bend 15° $T = 2.08\, e^{(.315)(.262)}$

$T = 2.27$

T_{11} Horizontal 12'-11" $T = 2.27 + (.315)(0.4)(12.92)$

$T = 3.89$

T_{12} Bend 90° $T = 3.89\, e^{(.315)(1.57)}$

$T = 6.39$

T_{13} Vertical 10'-7 1/2" up $T = 6.39 + (10.625)(0.4)$

$T = 10.64$

IPV961D

COMPUTED MTS DATE 9-7-85
CHECKED DRB DATE 9-17-85

T_{14} Bend 90° $T = 10.64\, e^{(.315)(1.57)}$
$T = 17.45$

T_{15} Horizontal 3'-6½" $T = 17.45 + (3.52)(.315)(0.4)$
$T = 17.89$

T_{16} Bend 47° $T = 17.89\, e^{(.315)(.820)}$
$T = 23.17$

T_{17} Straight run 1'-8" 47° down $T = 23.17 + (1.67)(0.4)(.315 \cos 47° - \sin 47°)$
$T = 22.82$

T_{18} Bend 90° $T = 22.82\, e^{(.315)(1.57)}$
$T = 37.44$

T_{19} Horizontal 2'-11" $T = 37.44 + (.315)(0.4)(2.92)$
$T = 37.80$

at T_{18} $SWP = \frac{W_c T}{2R} = \frac{(1.05)(37.44)}{2(.705)} = 27.88$

TVA 488 (EN DES-3-77)

1PU961D

COMPUTED KTS DATE 9-7-85
CHECKED JRB DATE 9-17-85

PULL C to B

T_{19} : Horizontal $T = (.315)(0.4)(2\frac{11}{12})$
$T = .37$

T_{18} 90° bend $T = e^{(.315)(1.57)} .37$
$T = .60$

T_{17} Straight 47° up $T = (\frac{30}{12})(0.4)(\sin 47° + .315 \cos 47°)$
$T = 1.23$

T_{16} 47° bend $T = e^{(.315)(.820)} 1.23$
$T = 1.60$.

T_{15} Horizontal $T = (3\frac{6\frac{1}{2}}{12})(.315)(0.4) + 1.60$
$T = 2.04$

T_{14} 90° bend $T = e^{(.315)(1.57)} 2.04$
$T = 3.35$

T_{13} Vertical down $T = (-10\frac{7\frac{1}{2}}{12})(0.4) + 3.35$
$T = -0.40$

Assume T up to this point is zero

T_{11} Horizontal $T = (.315)(0.4)(12\frac{11}{12})$
$T = 1.63$

T_{10} 15° bend $T = 1.63\ e^{(.315)(.262)}$
$T = 1.77$

T_{9} Horizontal $T = 1.77 + (\frac{19\frac{1}{2}}{12})(.315)(0.4)$
$T = 1.97$

T_{8} 15° bend $T = 1.97\ e^{(.315)(.262)}$
$T = 2.14$

TVA 488 (EN DES-3-77)

1PV961D

COMPUTED KTS DATE 9-7-85

CHECKED JRB DATE 9-17-85

PULL C → B

T_7 Horizontal

$T = 2.14 + \left(\frac{25}{12}\right)(.315)(0.4)$

$T = 2.42$

T_6 15° bend

$T = 2.42\, e^{(.315)(.262)}$

$T = 2.63$

T_5 Horizontal

$T = 2.63 + \left(\frac{19\,3/4}{12}\right)(.315)(0.4)$

$T = 2.83$

T_4 15° bend

$T = 2.83\, e^{(.315)(.262)}$

$T = 3.08$

T_3 Horizontal

$T = 3.08 + (.315)(0.4)\left(8\,\frac{3\,1/4}{12}\right)$

$T = 4.12$

T_2 90° bend

$T = 4.12\, e^{(.315)(1.57)}$

$T = 6.75$

T_1 Vertical Up

$T = 6.75 + \left(10\,\frac{3\,1/4}{12}\right)(0.4)$

$T = 10.86$

$$SWP = \frac{W_c T}{2R} = \frac{(1.05)\,6.75}{2(.705)} = 5.03$$

Pulls between points A and B and between C and D are relatively straight and short and are neglectable

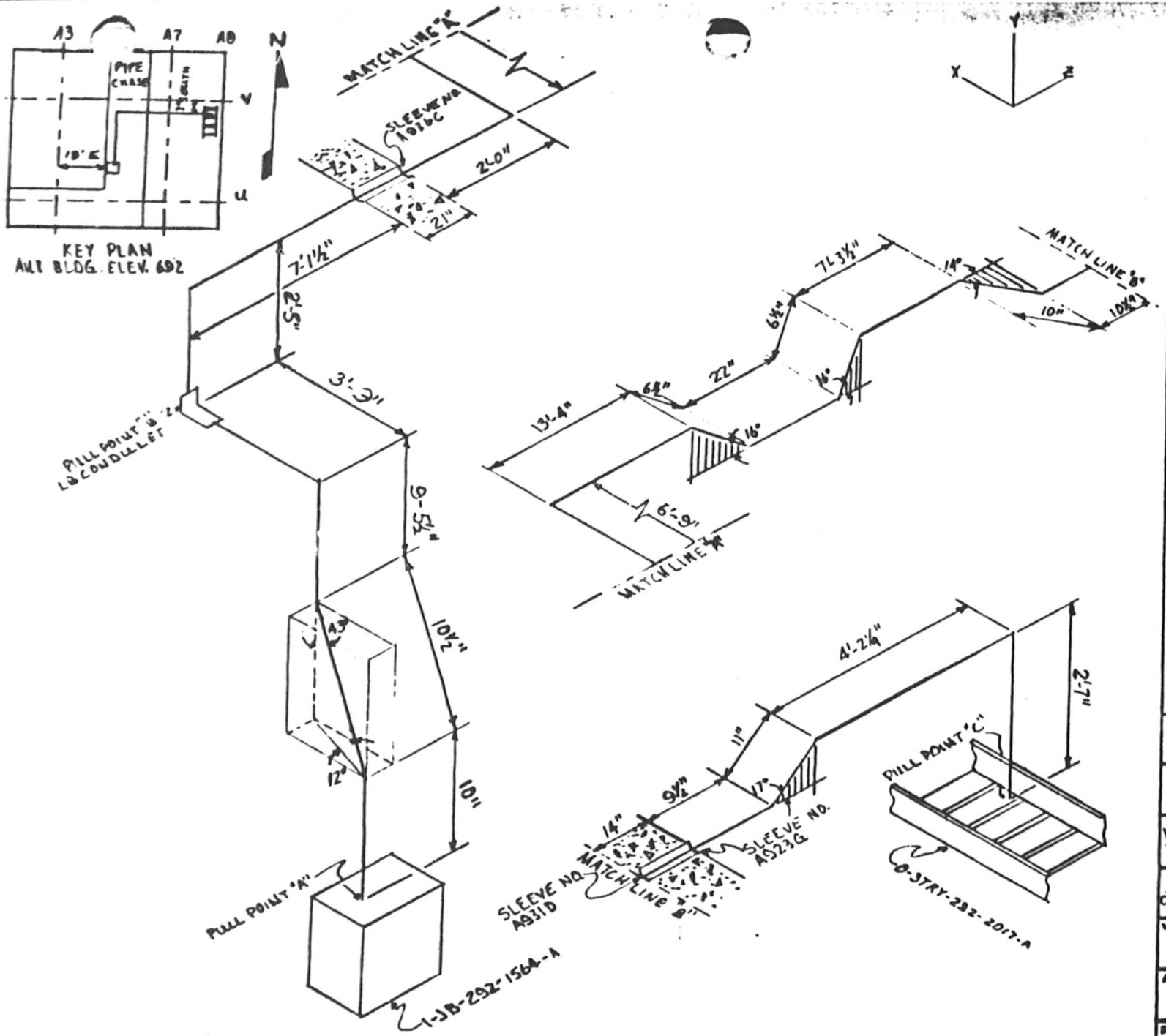

NOTES:

1. ALL BENDS HAVE A RADIUS OF 9½" UNLESS OTHERWISE NOTED. (2" I) CONDUIT

2. TOLERANCES AS SPECIFIED BY EP-22.29

3. ALL BENDS NOT SPECIFIED ARE 90°

4.

CABLE UNID	MANU-FACTURER
1V2121A 1V2903A	LATER

5. REF. DWG # 45N822 8,9,12

6. ALL DIMENSIONS CL TO CL

AUXILIARY BUILDING UNIT-1

RACEWAY ISOMETRIC DWG. ELE. 692' COND. # 1VC580A

WATTS BAR NUCLEAR PLANT TVA/OC

ENGINEER: Lawrence D. Jackson DATE: 8-29-85

VERIFICATION: J.W. Nave

APPROVED: [signature]

DRAWING NO: E1VC580A S.P. R.0

OE&DA SIGNATURES SIGNIFY ACCEPTANCE TO "WORSE CASE" CRITERIA

OE: Jim M. Mann/JAF QA: C.S. Hsieh

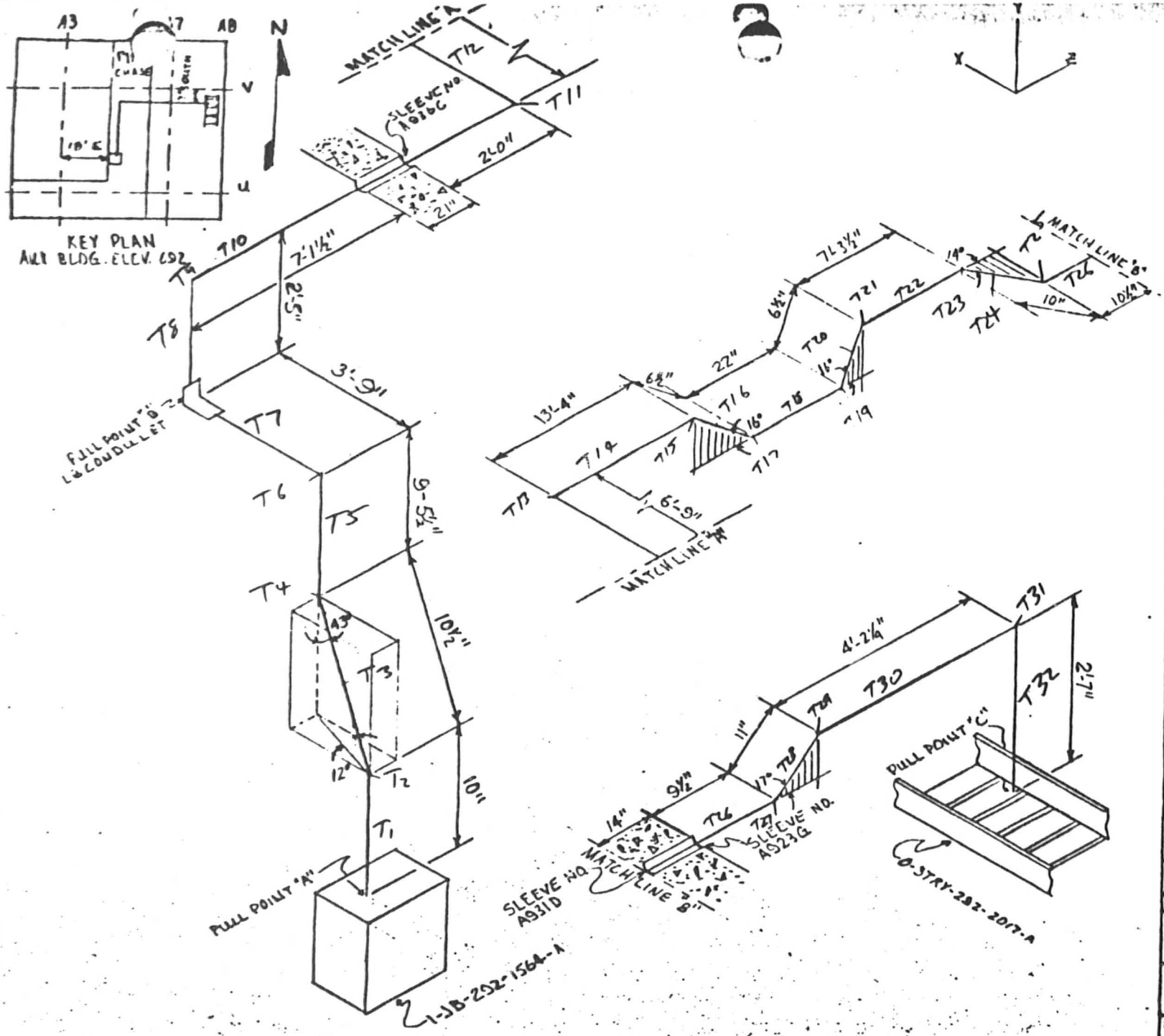

NOTES:

1. ALL BENDS HAVE A RADIUS OF 9½" UNLESS OTHERWISE NOTED. (2" I) CONDUIT

2. TOLERANCES AS SPECIFIED BY EP-22.29

3. ALL BENDS NOT SPECIFIED ARE 90°

4.

CABLE UNID	MANU-FACTURER
1V2121A WHJ 1V2303A WHL-1	LATER

NV-3A
R/C #14
1 C/C #14

5. REF. DWG # 45N822 8,9,12

6. ALL DIMENSIONS CL TO CL

AUXILIARY BUILDING UNIT-1

RACEWAY ISOMETRIC DWG. ELE. 692' COND. # 1VC580A

WATTS BAR NUCLEAR PLANT
TVA/OC

ENGINEER:	DATE:
Lawrence D. Jackson	8-29-85

VERIFICATION:

APPROVED:

DRAWING NO. N/A EEG-EP-22.29
SAMPLE PROGRAM

OE & QA SIGNATURES SIGNIFY ACCEPTANCE TO "WORSE CASE" CRITERIA

OE:	QA:
	CS

1VC580A

TVA 488 (EN DES 3-77)

CONDUIT IVC580A NV3A

SHEET 1 OF 4

$K = .3$ $P/d = 2.07/.72 = 2.88$ $w_e - 1.4$

$w_s = .425 + .336 = .76$ $\mu = .42$

COMPUTED KTS DATE 9-7-85

CHECKED JRB DATE 9-18-85

pull A → B

T_1 Vertical 10" $T = .83 \times .76 = .63$

T_2 Bend 43° $T = .63\, e^{(.42)(.75)} = .86$

T_3 Straight run 10½" up 12° $T = .86 + (.88)(.76)(.42\cos 12 + \sin 12)$ $T = 1.28$

T_4 Bend 43° $T = 1.28\, e^{(.42)(.75)} = 1.75$

T_5 Vertical 9'-5½" $T = 1.75 + (9.46)(.76) = 8.94$

T_6 Bend 90° $T = 8.94\, e^{(.42)(1.57)} = 17.30$

T_7 Horizontal 3'-9" $T = 17.30 + (3.75)(.76)(.42)$ $T = 18.49$

$$SWP = \frac{1.4 \times 17.30}{2 \times .705} = 17.18$$

pull B → C

T_8 Vertical 2'-5" $T = 2.42 \times .76 = 1.84$

T_9 Bend 90° $T = 1.84\, e^{(.42)(1.57)} = 3.56$

T_{10} Horizontal 10'-10½" $T\ 3.56 + (10.88)(.42)(.76)$ $T\ 7.03$

T_{11} Bend 90° $T - 7.03\, e^{(1.57)(.42)} = 13.60$

T_{12} Horizontal 6'-9" $T = 13.60 + (6.75)(.76)(.42)$ $T = 15.75$

T_{13} Bend 90° $T = 15.75\, e^{(1.57)(.42)}$ $T = 30.47$

COMPUTED KTS DATE 9-7-85
CHECKED JRB DATE 9-18-85

T_{14} Horizontal 13'-4" $T = 30.47 + (13.33)(.76)(.42)$
$T = 34.73$

T_{15} Bend 16° $T = 34.73\, e^{(.42)(.30)} = 39.34$

T_{16} Straight run 6½" down 16° $T = 39.34 + (.54)(.76)(.42 \cos 16 - \sin 16$
$T = 39.39$

T_{17} Bend 16° $T = 39.39\, e^{(.42)(.30)} = 44.61$

T_{18} Horizontal 22" $T = 44.61 + (1.83)(.76)(.42)$
$T = 45.20$

T_{19} Bend 16° $T = 4520\, e^{(.42)(.30)} = 50.82$

T_{20} Straight run 6½" up 16° $T = 50.82 + (.54)(.76)(.42 \cos 16° + \sin 16°)$
$T = 51.10$

T_{21} Bend 16° $T = 51.10\, e^{(.42)(.30)} = 57.46$

T_{22} Horizontal 7'-3½" $T = 57.46 + (7.29)(.76)(.42)$
$T = 59.79$

T_{23} Bend 14° $T = 59.79\, e^{(.42)(.24)} = 66.25$

T_{24} Horizontal 10" $T = 66.25 + (.83)(.76)(.42) = 66.52$

T_{25} Bend 14° $T = 66.52\, e^{(.42)(.24)} = 73.70$

T_{26} Horizontal 2'-10" $T = 73.70 + (2.83)(.76)(.42) = 74.61$

T_{27} Bend 17° $T = 74.61\, e^{(.42)(.30)} = 84.51$

T_{28} Straight run 11" slope up 17° $T = 84.51 + (.42)(.76)(.42 \cos 17° + \sin 17)$
$T = 84.99$

IVC 580A

COMPUTED KTS DATE 9-7-85
CHECKED JRB DATE 9-18-85

T_{26} Bend 17° $T = 84.99\, e^{(.42)(.30)} = 96.27$

T_{30} Horizontal 4'-2 1/4" $T = 96.27 + (4.19)(.76)(.42)$
$T = 97.61$

T_{31} Bend 90° $T = 97.61\, e^{(.42)(1.57)} = 188.81$

T_{32} Vertical 2'-7" $T\ 188.81 - (2.58)(.76) = 186.85$

SWP $\frac{1.4 \times 188.81}{2 \times .705} = 187.47$

pull C → B

T_{32} Vertical 2'-7" $T = 2.58 \times .76 = 1.96$

T_{31} Bend 90° $T = 1.96\, e^{(.42)(1.57)} = 3.79$

T_{30} Horizontal 4'-2 1/4" $T = 3.79 + (4.19)(.76)(.42)$
$T = 5.13$

T_{29} Bend 17° $T = 5.13\, e^{(.42)(.30)} = 5.81$

T_{28} Straight run 11" down 17° $T = 5.81 + (.92)(.76)(.42 \cos 17° - \sin 17°)$
$T = 5.89$

T_{27} Bend 17° $T = 5.89\, e^{(.42)(.30)} = 6.67$

T_{26} Horizontal 2'-10" $T = 6.67 + (2.83)(.76)(.42)$
$T = 7.57$

T_{25} Bend 14° $T = 7.57\, e^{(.42)(.24)} = 8.39$

T_{24} Horizontal 10" $T = 8.39 + (.83)(.76)(.42)$
$T = 8.66$

TVA 488 (EN DES 3 77)

IVC 580A

COMPUTED KTS DATE 9-7-85
CHECKED JRB DATE 9-18-85

T_{23} Bend 14° $T = 8.66e^{(.42)(.24)} = 9.59$

T_{22} Horizontal 7'-3½" $T = 9.59 + (7.29)(.76)(.42)$
$T = 11.92$

T_{21} Bend 16° $T = 11.92\, e^{(.42)(.28)} = 13.40$

T_{20} Straight run 6½" down 16° $T = 13.40 + (.54)(.76)(.42 \cos 16 - \sin 16)$
$T = 13.45$

T_{19} Bend 16° $T = 13.45\, e^{(.42)(.28)} = 15.13$

T_{18} Horizontal 22" $T = 15.13 + (1.83)(.76)(.42) = 15.71$

T_{17} Bend 16° $T = 15.71\, e^{(.42)(.28)} = 17.67$

T_{16} Straight run 6½" up 16° $T = 17.67 + (.54)(.76)(.42 \cos 16 + \sin 16)$
$T = 17.95$

T_{15} Bend 16° $T = 17.95\, e^{(.42)(.28)} = 20.19$

T_{14} Horizontal 13'-4" $T = 20.19 + (13.33)(.76)(.42)$
$T = 24.45$

T_{13} Bend 90° $T = 24.45\, e^{(.42)(1.57)} = 47.31$

T_{12} Horizontal 6'-9" $T = 47.31 + (6.75)(.76)(.42) = 49.46$

T_{11} Bend 90° $T = 49.46\, e^{(.42)(1.57)} = 95.70$

T_{10} Horizontal 10'-10½" $T = 95.70 + (10.88)(.42)(.76) = 99.17$

T_6 Bend 90° $T = 99.17\, e^{(.42)(1.57)} = 191.88$

T_6 Vertical 2'-5" $T = 191.88 - (2.42)(.76) = 190.04$

$$SWP = \frac{1.4 \times 191.88}{2 \times .705} = 190.52$$

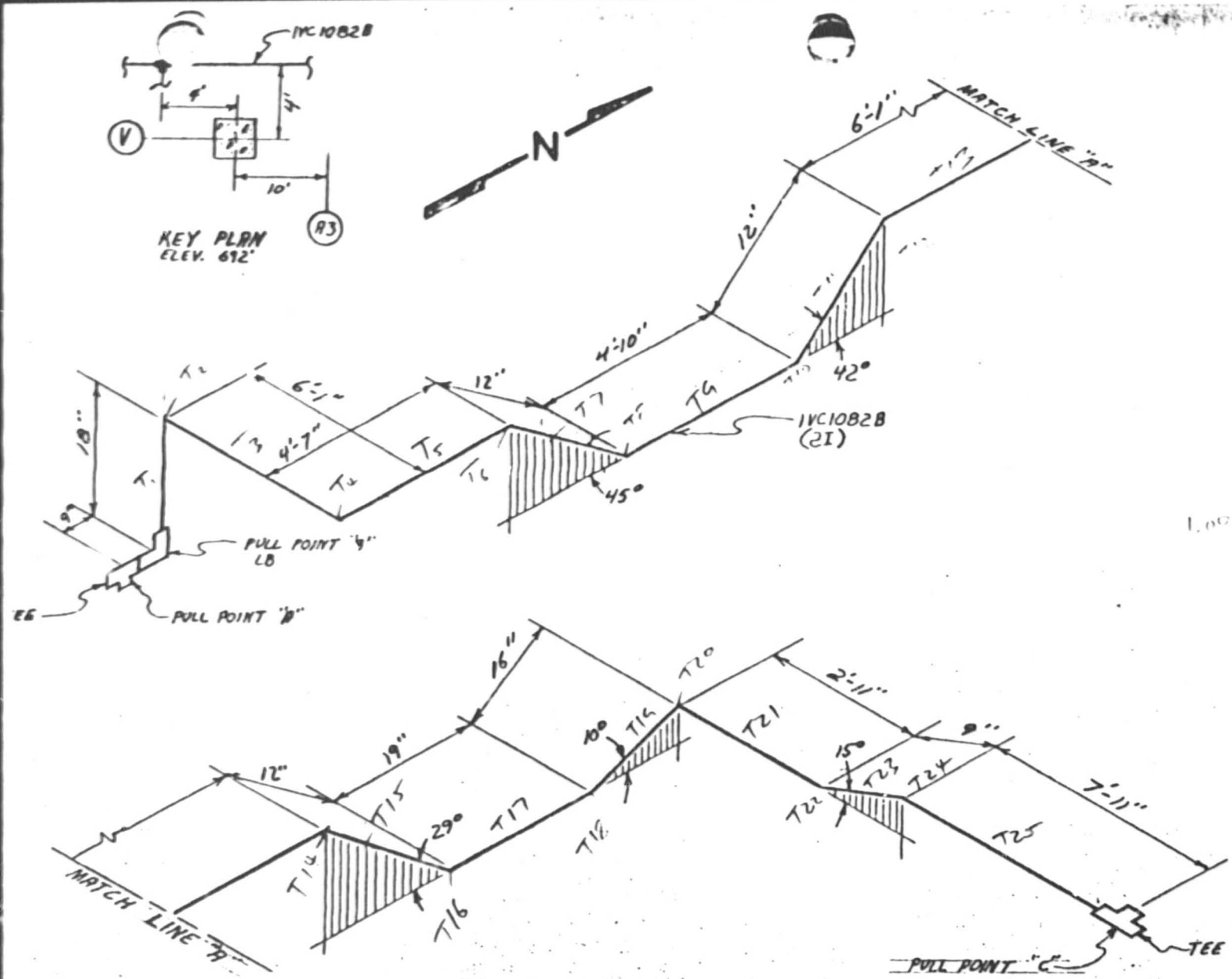

NOTES:

1. ALL BENDS HAVE A RADIUS OF 9.5" UNLESS OTHERWISE NOTED. (2I)

2. TOLERANCES AS SPECIFIED BY EP 22.29

3. ALL BENDS NOT SPECIFIED ARE 90°

4.

CABLE UNID	MANU-FACTURER	MULTIB
1PL3141B WLO	LATER	3/C 10
1PL1A00B WAJ	↓	3/C 6
1V DPL 3140B	↓	3/C #10 (WLO)

5. REF. DWG #45N822-8

6. ALL DIMENSIONS CL TO CL

AUXILIARY BLDG. - UNIT 2

RACEWAY ISOMETRIC
DWG. ELE. 692' COND. #1VC1082B

WATTS BAR NUCLEAR PLANT
TVA/OC

ENGINEER: W.D. Pa[illegible] DATE: 8-30-85

VERIFICATION: J.W. Nave

APPROVED: [illegible]

DRAWING NO: N/A
EEB-EP-22.29
SAMPLE PROGRAM

OE AND QA SIGNATURES INDICATE ACCEPTANCE TO "WORSE CASE" CRITERIA

OE: QA:

1VC1082B

CONDUIT IVC1082B 3 CABLES NV4B SHEET 1 OF 5

$K = 0.3$ $D/d = 2.07/1.00 = 2.07$

$W_c = 1.4$ $W_t = (2 \times .265) + .39 = .92$

$\mu = .42$ ~~$\mu = .94$~~

COMPUTED KTS DATE 9-7-85

CHECKED JRB DATE 9-17-85

PULL B to C

T_1 Vertical up 18" $T_1 = (1.5)(.92)$
$T_1 = 1.38$

T_2 Bend 90° $T_2 = 1.38\, e^{(.42)(1.57)}$
$T_2 = 2.67$

T_3 Horizontal 6'-1" $T = 2.67 + (.42)(6.08)(.92)$
$T = 5.02$

T_4 Bend 90° $T = 5.02\, e^{(.42)(1.57)}$
$T = 9.71$

T_5 Horizontal 4'-7" $T = 9.71 + (4.58)(.42)(.92)$
$T = 11.48$

T_6 Bend 45° $T = 11.48\, e^{(.42)(.79)}$
$T = 15.97$

T_7 Straight run 12" down 45° $T = 15.97 + (.42 \cos 45° - \sin 45°)(1)(.92)$
$T = 15.59$

T_8 Bend 45° $T = 15.59\, e^{(.42)(.79)}$
$T = 21.69$

T_9 Horizontal 4'-10" $T = 21.69 + (4.83)(.92)(.42)$
$T = 23.55$

T_{10} Bend 42° $T = 23.55\, e^{(.73)(.42)}$
$T = 32.05$

T_{11} Straight run 12" up 42° $T = 32.05 + (.42 \cos 42° + \sin 42°)(1)(.92)$
$T = 32.92$

T_{12} Bend 42° $T = 32.92\, e^{(.73)(.42)}$
$T = 44.83$

COMPUTED FTS DATE 9-7-85
CHECKED JRB DATE 9-17-85

T_{13} Horizontal 6'-1" $T = 44.83 + (6.08)(.42)(.42)$
$T = 47.18$

T_{14} Bend 29° $T = 47.18\, e^{(.42)(.51)}$
$T = 58.35$

T_{15} Straight run 12" down 29° $T = 58.35 + (1)(.42)(.42\cos 29° - \sin 29°)$
$T = 58.24$

T_{16} Bend 29° $T = 58.24\, e^{(.42)(.51)}$
$T = 72.04$

T_{17} Horizontal 19" $T = 72.04 + (1.58)(.42)(.42)$
$T = 72.65$

T_{18} Bend 10° $T = 72.65\, e^{(.42)(.17)}$
$T = 78.18$

T_{19} Straight run 16" up 10° $T = 78.18 + (1.33)(.42)(.42\cos 10° + \sin 10°)$
$T = 78.90$

T_{20} Bend 90° $T = 78.9\, e^{(.42)(1.57)}$
$T = 152.61$

T_{21} Horizontal 2'-11" $T = 152.61 + (2.42)(.42)(.42)$
$T = 153.74$

T_{22} Bend 15° $T = 153.74\, e^{(.42)(.26)}$
$T = 171.61$

T_{23} Straight run 9" up 15° $T = 171.61 + (.75)(.42)(.42\cos 15 + \sin 15°)$
$T = 172.07$

T_{24} Bend 15° $T = 172.07\, e^{(.42)(.26)}$
$T = 192.07$

T_{25} Horizontal 7'-11" $T = 192.07 + (7.42)(.42)(.42)$
$T = 195.12$

COMPUTED KTS DATE 9-7-85

CHECKED JRB DATE 9-17-85

at T_{24} SWP $= \frac{1.4 \times 192.07}{2 \times .705} = 190.71$

PULL FROM C to B

T_{23} Horizontal 7'-11" $T = (7.92)(.42)(.42)$
$T = 3.06$

T_{22} Bend 15° $T = 3.06\, e^{(.42)(.26)}$
$T = 3.41$

T_{21} Straight run 9" down 15° $T = 3.41 + (.75)(.42)(.42\cos 15° - \sin 15°)$
$T = 3.52$

T_{20} Bend 15° $T = 3.52\, e^{(.42)(.26)}$
$T = 3.92$

T_{21} Horizontal 2'-11" $T = 3.92 + (2.42)(.42)(.42)$
$T = 5.05$

T_{20} Bend 90° $T = 5.05\, e^{(.42)(1.57)}$
$T = 9.77$

T_{19} Straight run 16" down 10° $T = 9.77 + (1.33)(.42)(.42\cos 10° - \sin 10°)$
$T = 10.07$

T_{18} Bend 10° $T = 10.07\, e^{(.42)(.17)}$
$T = 10.83$

T_{17} Horizontal 19" $T = 10.83 + (1.58)(.42)(.42)$
$T = 11.44$

T_{16} Bend 29° $T = 11.44\, e^{(.42)(.51)}$
$T = 14.15$

T_{15} Straight run 12" up 29° $T = 14.15 + (1)(.42)(.42\cos 29° + \sin 29°)$
$T = 14.44$

COMPUTED KTS DATE 5-7-85
CHECKED JRB DATE 9-17-85

T_{14} Bend 29° $T = 14.94\, e^{(.78)(.37)}$
$T = 18.48$

T_{13} Horizontal 6'-1" $T = 18.48 + (6.08)(.42)(.92)$
$T = 20.83$

T_{12} Bend 42° $T = 20.83\, e^{(.73)(.42)}$
$T = 28.33$

T_{11} Straight run 12" down 42° $T = 28.33 + (1)(.92)(.42\cos 42° - \sin 42°)$
$T = 28.01$

T_{10} Bend 42° $T = 28.01\, e^{(.73)(.42)}$
$T = 38.10$

T_9 Horizontal 4'-10" $T = 38.10 + (4.83)(.92)(.42)$
$T = 39.97$

T_8 Bend 45° $T = 39.97\, e^{(.42)(.79)}$
$T = 55.59$

T_7 Straight run 12" up 45° $T = 55.59 + (1)(.92)(.42\cos 45° + \sin 45°)$
$T = 56.51$

T_6 Bend 45° $T = 56.51\, e^{(.42)(.79)}$
$T = 78.60$

~~T_5 Straight run 12"~~

T_5 Horizontal 4'-7" $T = 78.60 + (4.58)(.42)(.92)$
$T = 80.37$

T_4 Bend 90° $T = 80.37\, e^{(.42)(1.57)}$
$T = 155.46$

T_3 Horizontal 6'-1" $T = 155.46 + (.42)(6.08)(.92)$
$T = 157.81$

TVA 488 (EN DES 3-77)

1VC1082B

COMPUTED KTS DATE 9-7-85
CHECKED JRB DATE 9-17-85

T_2 Bend 90° $T = 157.81\, e^{(.42)(1.57)}$

$T = 305.24$

T_1 Vertical down 18" $T = 305.24 - (1.5)(.42)$

$T = 303.86$

at T_2 $SWP = \dfrac{(1.4)(305.24)}{2 \times .705} = 303.08$

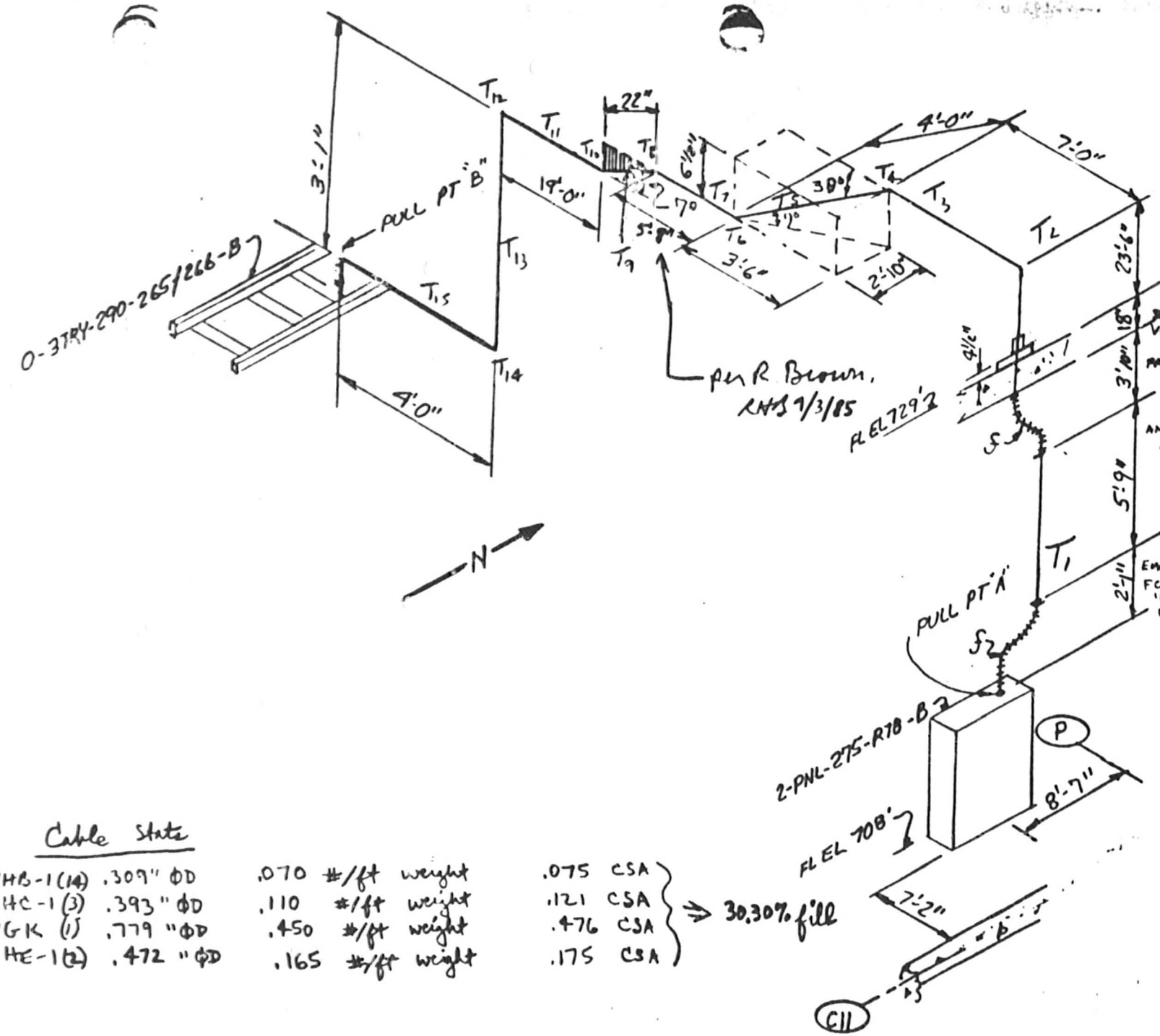

NOTES

1. ALL BEN[illegible] HAVE A RADIUS OF 13" UNLESS OTHERWISE NOTED. (3" ØI CONDUIT)
2. TOLERANCES ARE AS SPECIFIED BY EP 22.29.
3. ALL BENDS NOT SPECIFIED ARE 90°.
4.

	CABLE UNID	MANUFACTURER
		NV3B
SEP RLY	2M591B	Latter 1-3/c #14 WHB-1
VLV RLY	2M1435B	"
"	2M1437B	"
FAN CONT	2M2346B	"
"	2M2347B	"
"	2M2358B	"
"	2M2359B	"
ANN	2M2450B	"
CONT	2M3421B	1-3/c #14 WHC-1
CONT	2SG615B	1-2/c #14 WHB-1
"	2SG616B	" "
"	2SG617B	1-3/c #14 WHC-1
"	2SG619B	1-2/c #14 WHB-1
"	2SG623B	" "
"	2SG625B	1-3/c #14 WHC-1
"	2SG627B	1-2/c #14 WHB-1
Emer Sys	2V6713B	1-12/c #12 WGK
FCV CONT	2V9555B	1-2/c #14 WHB-1
"	2V9842B	1-5/c #14 WHE-1
"	2V9849B	" "

5. REF. DWGS: 45W814-2, -9, -13, & 45W812-7.
6. ALL DIMENSIONS ℄ TO ℄

CONTROL BUILDING
UNIT 2

RACEWAY ISOMETRIC DWG
CONDUIT # 2M2987B

WATTS BAR NUC. PLANT
TVA / OC

ENGINEER: Roger A. Brown
DATE: 8-24-85

VERIFICATION: J. W. [illegible]

APPROVED: [illegible]

DRAWING: N/A EEB EP 22.29 SAMPLE PROGRAM

OE & QA SIGNATURES INDICATE ACCEPTANCE TO WORSE

OE:

QA: [illegible]

Cable Stats

WHB-1(14)	.309" ØD	.070 #/ft weight	.075 CSA	⇒ 30.30% fill
WHC-1(3)	.393" ØD	.110 #/ft weight	.121 CSA	
WGK (1)	.779" ØD	.450 #/ft weight	.476 CSA	
WHE-1(2)	.472" ØD	.165 #/ft weight	.175 CSA	

CONDUIT 2M-2987B (20 cables) SHEET 1 OF 3

$K = .3$, $D/d = 3.07/.779 = 3.9 \Rightarrow$ cradle formation

$W_t = (14 \times .07) + (3 \times .11) + (.45) + (2 \times .165) = 2.09$, $W_c = 1.4$

$\rightarrow \underline{K} = W_c K = 1.4 \times .3 = .42$

COMPUTED RHB DATE 8-31-85

CHECKED JRB DATE 9-4-85

PULL A to B (362°)

T_1 Vertical Straight (up)

$T = LW_t = 36.67 \times 2.09$
$= 76.63\#$

T_2 Vertical Bend (90°)

$T = T_1 e^{\underline{K}b} = 76.63 e^{.42 \times \pi/2} = 76.63 \times 1.93$
$= 148.23\#$

T_3 Horiz. Straight

$T = \underline{K} L W_t + T_2 = .42 \times 7.0 \times 2.09 + 148.23$
$= 154.37\#$

T_4 Vertical Bend (39°)

$T = T_3 e^{\underline{K}b} = 154.37 e^{.42 \times .68} = 154.37 \times 1.33$
$= 205.46\#$

T_5 Down Ramp (9°)

$T = LW_t (\underline{K} \cos\alpha - \sin\alpha) + T_4$
$= 4 \times 2.09 (.42 \cos 9° - \sin 9°) + 205.46$
$= 207.62\#$

T_6 Vertical Bend (39°)

$T = T_5 e^{\underline{K}b} = 207.62 e^{.42 \times .68} = 207.62 \times 1.33$
$= 276.33\#$

T_7 Horiz. Straight

$T = \underline{K} L W_t + T_6 = .42 \times \left(5 + \frac{8}{12}\right) \times 2.09 + 276.33$
$= 281.31\#$

T_8 Vertical Bend (7°)

$T = T_7 e^{\underline{K}b} = 281.31 e^{.42 \times .12} = 281.31 \times 1.05$
$= 296.12\#$

T_9 Down Ramp (7°)

$T = LW_t (\underline{K} \cos\alpha - \sin\alpha) + T_8$
$= \frac{22}{12} \times 2.09 (.42 \cos 7° - \sin 7°) + 296.12$
$= 297.25\#$

T_{10} Vertical Bend (7°)

$T = T_9 e^{\underline{K}b} = 297.25 e^{.42 \times .12} = 297.25 \times 1.05$
$= 312.90\#$

T_{11} Horiz. Straight

$T = \underline{K} L W_t + T_{10} = .42 \times 19 \times 2.09 + 312.90$
$= 329.58\#$

TVA 11030 (WM-7-?)

COMPUTED RKB DATE 8-31-85
CHECKED JRB DATE 9-4-85

T_{12} Vertical Bend (90°) $T = T_{11} e^{Kb} = 329.58 e^{.42 \times \pi/2} = 329.58 \times 1.93$
$= 637.50\#$

T_{13} Vertical Straight (Down) $T = T_{12} - L W_t = 637.5 - (3 + \frac{1}{12}) 2.09$
$= 631.05\#$

T_{14} Vertical Bend (90°) $T = T_{13} e^{Kb} = 631.05 e^{.42 \times \pi/2} = 631.05 \times 1.93$
$= 1220.64\#$

T_{15} Horiz. Straight $T = K L W_t + T_{14} = .42 \times 4 \times 2.09 + 1220.64$
$= 1224.15\#$

$SWP_{AC} = X\, T_{14}/R$, where $X = .27$, as interpolated from 6-38

$= .27 \times \frac{1220.64}{.955}$

$\boxed{SWP_{AC} = 345.10 \ \#/ft}$ Worst Case!

<u>This exceeds 300 # limit for these type cables!</u>

CND # 2M-2987B

COMPUTED RHB DATE 8-31-85
CHECKED JRB DATE 9-4-85

PULL B to A

T_{15} Horiz. Straight $T = \underline{K} L W_t$
$= 3.51\#$

T_{14} Vert. Bend (90°) $T = T_{15} e^{\underline{K}b}$
$= 6.79\#$

T_{13} Vert. Str. (Up) $T = L W_t + T_{14}$
$= 13.24\#$

T_{12} Vert. Bend (90°) $T = T_{13} e^{\underline{K}b}$
$= 25.60\#$

T_{11} Horiz. Str. $T = \underline{K} L W_t + T_{12}$
$= 42.28\#$

T_{10} Vert. Bend (7°) $T = T_{11} e^{\underline{K}b}$
$= 44.51\#$

T_9 Up Ramp (7°) $T = L W_t (\sin\alpha + \underline{K} \cos\alpha) + T_{10}$
$= 46.57\#$

T_8 Vert. Bend (7°) $T = T_9 e^{\underline{K}b}$
$= 49.02\#$

T_7 Horiz. Str. $T = \underline{K} L W_t + T_8$
$= 54.00\#$

T_6 Vert. Bend (39°) $T = T_7 e^{\underline{K}b}$
$= 71.87\#$

T_5 Up Ramp (9°) $T = L W_t (\sin\alpha + \underline{K} \cos\alpha) + T_6$
$= 76.64\#$

T_4 Vert. Bend (39°) $T = T_5 e^{\underline{K}b}$
$= 102.01\#$

T_3 Horiz. Str. $T = \underline{K} L W_t + T_4$
$= 108.15\#$

T_2 Vert. Bend (90°) $T = T_3 e^{\underline{K}b}$
$= 209.19\#$

T_1 Vert. Str. (Down) $T = T_2 - L W_t$
$= 132.56\#$

$SWP_{BA} = X T_2 / R$

$$\boxed{SWP_{BA} = 59.14\ \#/ft}$$

TVA 11030 (WM-7-75)

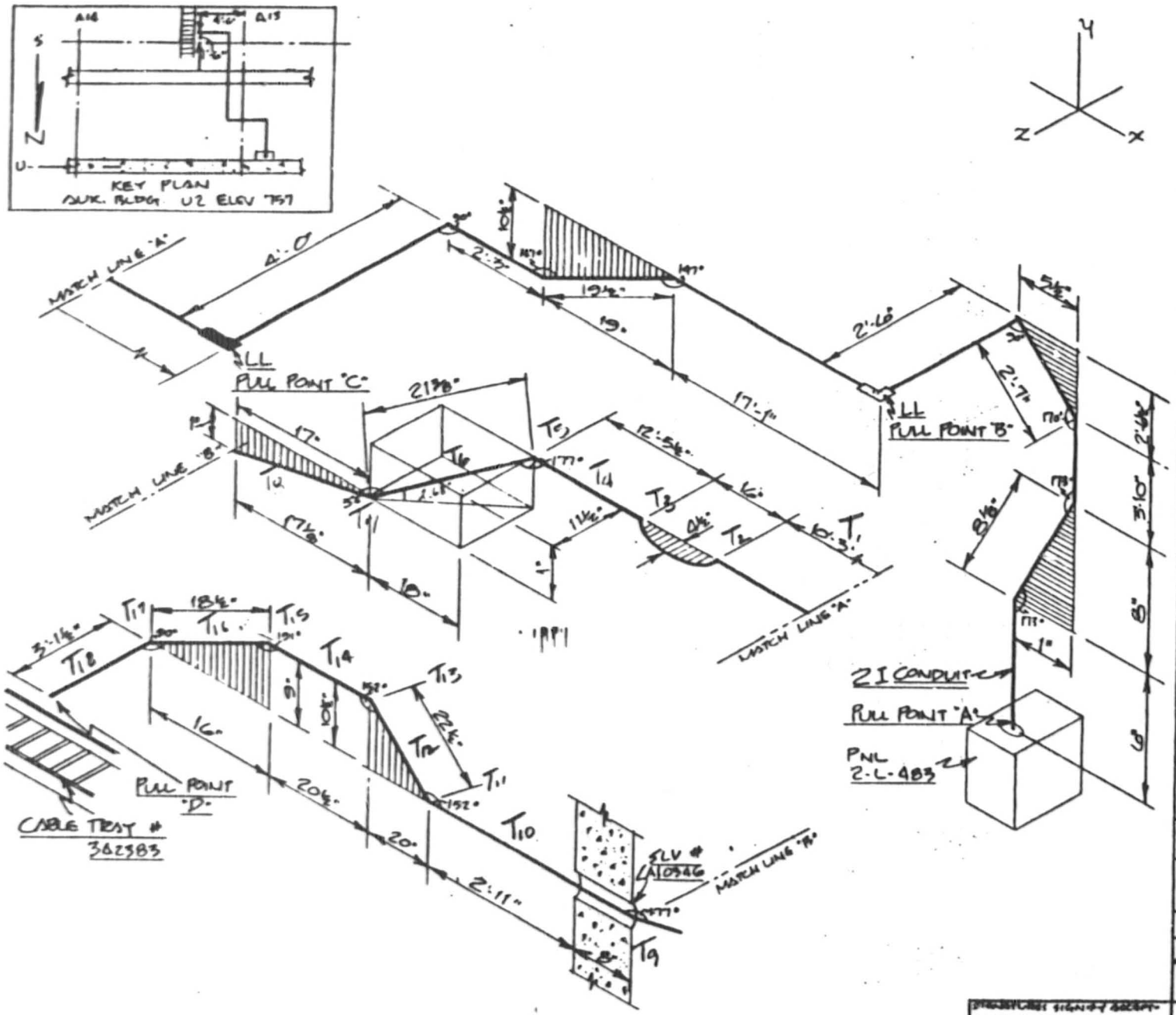

NOTES:

1. ALL BENDS HAVE A BEND RADIUS OF 9½" UNLESS OTHERWISE NOTED (2I
2. TOLERANCES AS SPECIFIED BY EP 22.29
3. ALL BENDS NOT SPECIFIED ARE 90°
4.

CABLE UNIDS	MANUFACTURER
2M2401A	LATER
2402A	LATER
2407A	LATER

5. REFERENCE DWG # 45W828-7
6. ALL DIMENSIONS ℄ TO ℄

AUXILIARY BUILDING - UNIT 2

RACEWAY ISOMETRIC DRAWING
ELEV 757' - CONDUIT NO. 2M 3360A

WATTS BAR NUCLEAR PLANT TVA-OC

ENGINEER	VERIFICATION	APPROVED
[signature]	[signature]	[signature]

DATE	DRAWING NUMBER
8/20/85	N/A BEB - EP-22.29 SAMPLE PROGRAM

DIMENSIONS SIGNIFY ACCEPTANCE AS WORSE CASE ONLY NOT DIMENSIONAL VERIFICATION.

[signature]

CONDUIT 2M 3360A 2I (V3) [From pull point C to D] .912

CABLES	2M 2401A	1-16/C #12 (WGM)	0.640	COMPUTED RMS	DATE 8/23/85
	2402A	1-7/C #10 (WFG-1)	0.400	CHECKED JRB	DATE 8-24-85
	2407A	1-9/C #12 (WGH)	0.374	.694	

$W_t = 0.640 + 0.400 + 0.374 = 1.414$

$W_c = 1.4$

$\underline{K} = W_c K = (1.4)(0.3) = 0.42$

SEGMENT	TYPE	ALGORITHM	TENSION
T_1	Straight	$T_1 = L W_t \underline{K} + \cancel{T_{an}}^{0}$	
		$= (0.25)(1.414)(0.42) =$	6.09
T_2	Vert bend (90°)	$T_2 = T_1 e^{\underline{K}b}$	
		$= 6.09\, e^{(0.42)(1.57)} =$	11.77
T_3	Vert bend (90°)	$T_3 = T_2 e^{\underline{K}b}$	
		$= 11.77\, e^{(0.42)(1.57)} =$	22.76
T_4	Straight	$T_4 = L W_t \underline{K} + T_3$	
		$= (12.46)(1.414)(0.42) + 22.76 =$	30.16
T_5	Vert bend (33°)	$T_5 = T_4 e^{\underline{K}b}$	
		$= 30.16\, e^{(0.42)(.57)} =$	38.32
T_6	Down slope (3°)	$T_6 = W_t L(\underline{K}\cos a - \sin a) + T_5$	
		$= (1.414)(1.78)(0.42\cos 3° - \sin 3°) + 38.32$	
		$= 39.24$	

TVA 11030 (WM 7-75)

COMPUTED RMS DATE 8/23/85
CHECKED JRB DATE 8-24-85

SEGMENT	TYPE	ALGORITHM	TENSION
T_7	Vert bend (33°)	$T_7 = T_6 e^{Kb}$	
		$= 39.24\, e^{(0.42)(.57)}$	$= 49.86$
T_8	Down slope (3°)	$T_8 = W_t L (\underline{K} \cos a - \sin a) + T_7$	
		$= (1.414)(1.42)(0.42 \cos 3° - \sin 3°) + 49.86$	$= 50.59$
T_9	Vert bend (3°)	$T_9 = T_8 e^{Kb}$	
		$= 50.59\, e^{(0.42)(.05)}$	$= 51.67$
T_{10}	Straight	$T_{10} = L W_t \underline{K} + T_9$	
		$= (2.42)(1.414)(0.42) + 51.67 = 53.40$	
T_{11}	Vert bend (28°)	$T_{11} = T_{10} e^{Kb}$	
		$= 53.40\, e^{(0.42)(0.49)}$	$= 65.70$
T_{12}	Up slope (28°)	$T_{12} = L W_t (\sin a + \underline{K} \cos a) + T_{11}$	
		$= (1.88)(1.414)(\sin 28° + 0.42 \cos 28°) + 65.70$	$= 67.84$
T_{13}	Vert bend (28°)	$T_{13} = T_{12} e^{Kb}$	
		$= 67.84\, e^{(0.42)(0.49)}$	$= 83.34$
T_{14}	Straight	$T_{14} = L W_t \underline{K} + T_{13}$	
		$= (1.71)(1.414)(0.42) + 83.34 = 84.35$	

COMPUTED RMS DATE 8/23/85
CHECKED JRB DATE 8-24-85

SEGMENT	TYPE	ALGORITHM	TENSION
T_{15}	Vert bend (29°)	$T_{15} = T_{14} e^{Kb}$	
		$= 84.35 e^{(0.42)(0.51)}$	$= 104.50$
T_{16}	Down slope (61')	$T_{16} = LW_c (K \cos a - \sin a) + T_{15}$	
		$= (1.54)(1.414)(0.42 \cos 61° - \sin 61°) + 104.50$	$= 103.04$
T_{17}	Horiz bend (90°)	$T_{17} = T_{16} e^{Kb}$	
		$= 103.04 e^{(0.42)(1.57)}$	$= 199.24$
T_{18}	Straight	$T_{18} = LW_c K + T_{17}$	
		$= (3.13)(1.414)(0.42) + 199.24$	
		$= 201.10$	

$$SWP = \left(\frac{1}{3}\right)(3W_c - 2)\left(\frac{T}{R}\right) \quad @ \; T_{17}$$

$R = 9\frac{1}{2}''$

$$= \left(\frac{1}{3}\right)(3(1.4) - 2)\left(\frac{199.24}{.705}\right)$$

$$= \underline{\underline{207.25}}$$

TOTAL BENDS = 424°

TVA 11030 (WM-7-75)

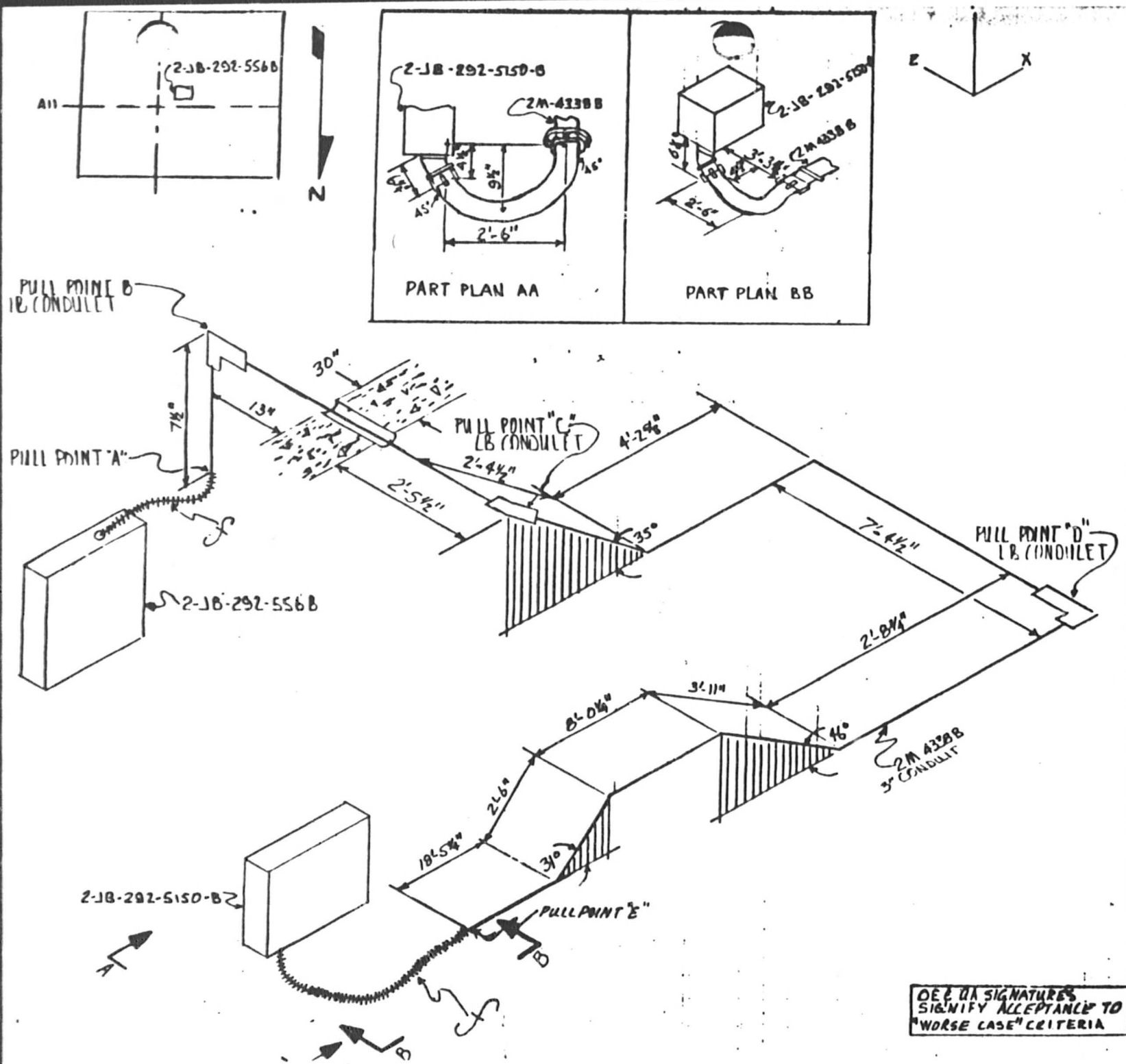

NOTES:

1. ALL BENDS HAVE A RADIUS OF 13" UNLESS OTHERWISE NOTED. (3" I) CONDUIT

2. TOLERANCES AS SPECIFIED BY EP-22.29.

3. ALL BENDS NOT SPECIFIED ARE 90°

4.

CABLE UNID	MANU-FACTURER
2PL6705B	LATER
2PL6818B	↓
2PL6819B	
2VB672B	
2VB674B	
2VB787B	
2VB788B	
2VB789B	
2VB790B	
2VB791B	

5. REF. DWG #45WB26-41. 38 & 6

6. ALL DIMENSIONS CL TO CL

AUXILIARY BUILDING - UNIT-2

RACEWAY ISOMETRIC
DWG. ELE. 728' COND. #2M4338B

WATTS BAR NUCLEAR PLANT
TVA/OC

ENGINEER: Lawrence D. Jackson
DATE: 8-27-85

VERIFICATION: J.W. Tone

APPROVED: R. Domanque

DRAWING NO: E 2M4338B S.P. R.0

OE & QA SIGNATURES SIGNIFY ACCEPTANCE TO "WORSE CASE" CRITERIA

OE: Ron E. Cox
QA: C.S. Hsieh

RC

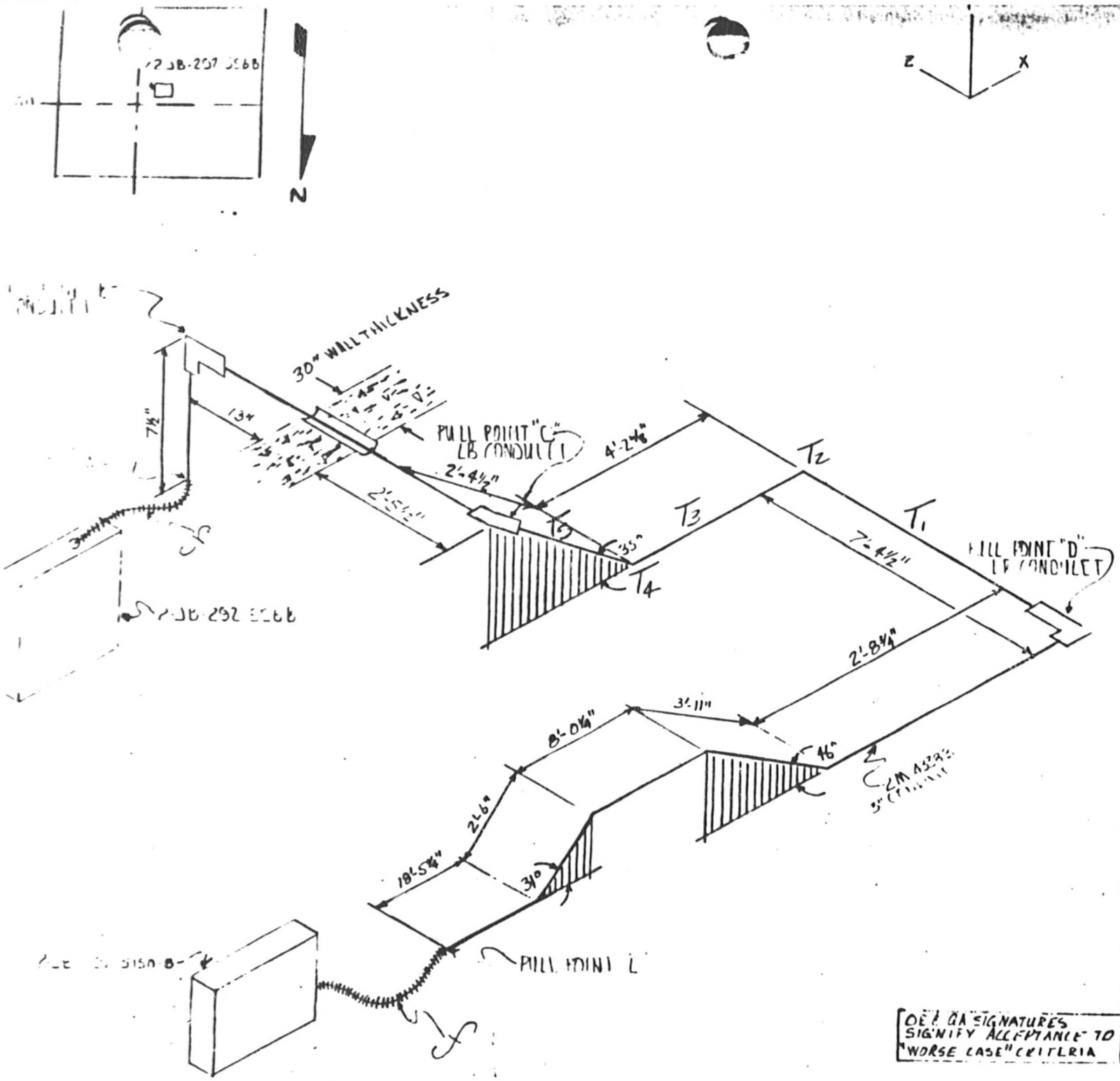

NOTES:

1. ALL BENDS HAVE A RADIUS OF 13" UNLESS OTHERWISE NOTED. (3" I) CONDUIT

2. TOLERANCES AS SPECIFIED BY EP-22.29.

3. ALL BENDS NOT SPECIFIED ARE 90°

4.

CABLE UNID	MANU-FACTURER
2PL6705B	LATEX
2PL6814B	↓
2PL6819B	
2VB672B	
2VB674B	
2VB787B	
2VB788B	
2VB789B	
2VB790B	
2VB791B	

5. REF. DWG @ 1SW826-41. 38 & 6

6. ALL DIMENSIONS CL TO CL

AUXILIARY BUILDING - UNIT-2

RACEWAY ISOMETRIC
DWG. ELE. 129' COND. @ 2M4338B

WATTS BAR NUCLEAR PLANT
TVA/OC

ENGINEER: [signature] DATE: 8-27-85

VERIFICATION: [signature]

APPROVED: [signature]

DRAWING NO: N/A EEB-EP-22.29
SAMPLE PROGRAM

OE & QA SIGNATURES SIGNIFY ACCEPTANCE TO "WORSE CASE" CRITERIA

OE: QA:

CONDUIT 2M4338B (3I) From pull point D to C

CABLES (see below)

[V3]

COMPUTED RMS DATE 9/6/85

CHECKED JRB DATE 9-6-85

			Weight	CSA
2PL6705B	1-4/C #14	WHD-1	0.132	.144
6818B	1-2/C #14	WHB-1	0.070	.075
6819B	1-4/C #14	WHD-1	0.132	.144
2V8672B	1-7/C #14	WHG-1	0.195	.204
8674B	1-2/C #14	WHB-1	0.070	.075
8787B	1-4/C #12	WGD-1	0.180	.177
8788B	1-4/C #12	WGD-1	0.180	.177
8789B	1-9/C #10	WFH-1	0.526	.538
8790B	1-7/C #12	WGG-1	0.295	.281
8791B	1-7/C #12	WGG-1	0.295	.281
			2.08	2.10

$W_t = 2.08$

$W_c = 1.4$

(2.96 available) 28% fill

$\underline{K} = KW_c = (0.3)(1.4) = 0.42$

SEGMENT	TYPE	ALGORITHM	TENSION
T_1	Straight	$T_1 = LW_t\underline{K} + \cancel{T_0}^{\,0}$	
		$= (7.38)(2.08)(0.42) =$	6.44
T_2	Horiz bend (90°)	$T_2 = T_1 e^{\underline{K}b}$	
		$= 6.44 e^{(0.42)(1.57)} =$	12.46
T_3	Straight	$T_3 = LW_t\underline{K} + T_2$	
		$= (4.22)(2.08)(0.42) + 12.46 =$	16.14
T_4	Vert bend (35°)	$T_4 = T_3 e^{\underline{K}b}$	
		$= 16.14 e^{(0.42)(0.61)} =$	20.87

COMPUTED RMS DATE 9/4/85
CHECKED JRB DATE 9-5-85

SEGMENT	TYPE	ALGORITHM	TENSION
T_5	Up slope (35°)	$T_5 = LWL(\sin\alpha + \mu\cos\alpha) + T_4$	

$$= (2.38)(2.08)(\sin 35° + .42\cos 35°) + 20.87$$
$$= 25.40$$

$$SWP = x\frac{T}{R}$$

@ T_4 $R = 13''$

$x = .42$

$$= 0.42\left[\frac{20.87}{.455}\right]$$

$$= 9.18 \frac{lb}{ft}$$

TOTAL BENDS = 125°

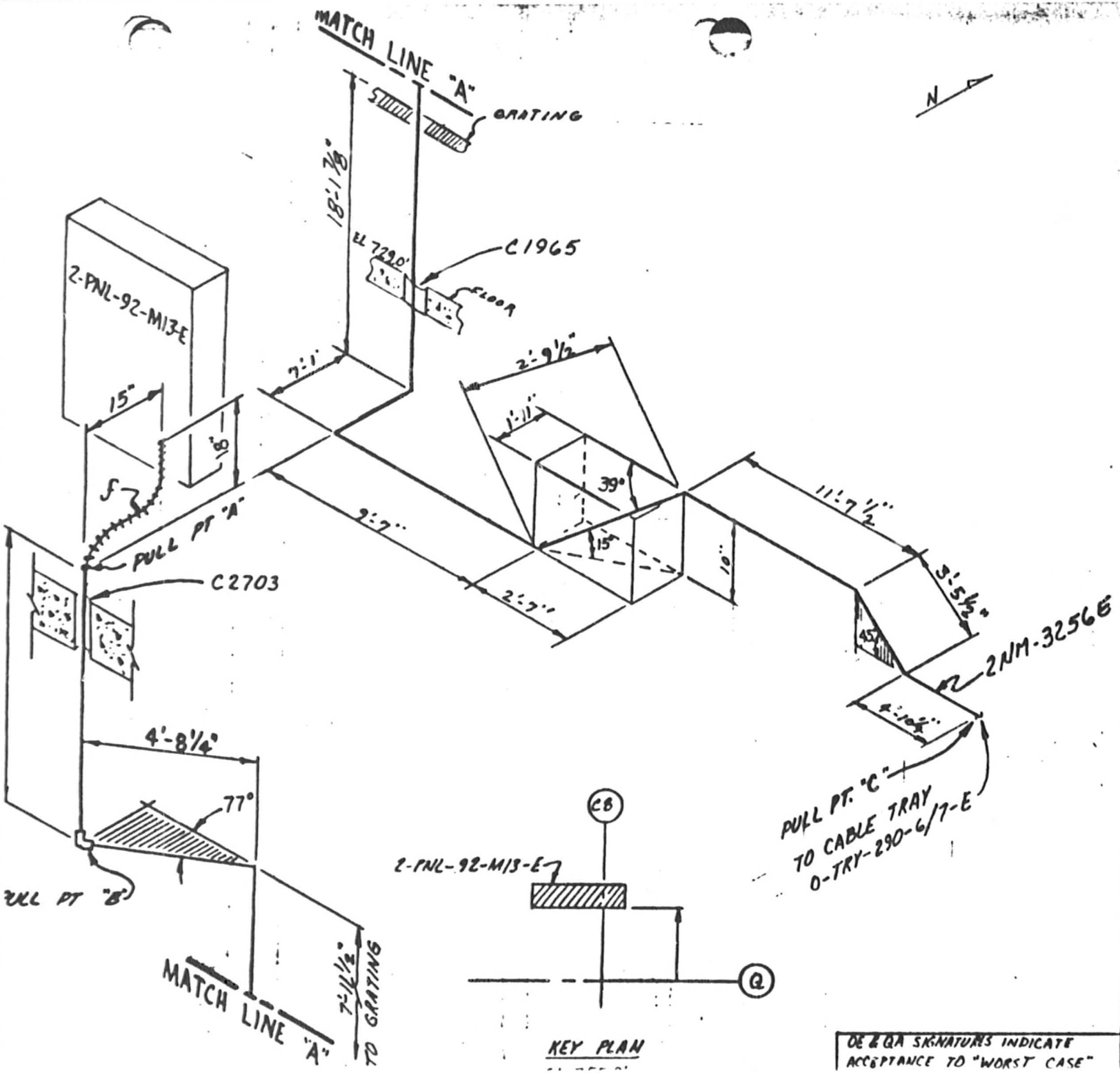

NOTES:

1. ALL BENDS HAVE A RADIUS OF 13" UNLESS OTHERWISE NOTED. (3" ØI CONDUIT)
2. TOLERANCES ARE AS SPECIFIED BY EP 22.29
3. ALL BENDS NOT SPECIFIED ARE 90°.
4. CABLE UNIO | MANUFACTURER

CABLE UNIO	MANUFACTURER
2NM240E	Rotor
241E	
242E	
243E	
244E	
245E	
246E	
247E	
248E	
249E	
250E	
251E	
260E	
261E	
262E	
263E	
264E	
265E	
266E	
267E	
268E	
269E	
270E	
271E	
281E	
2PM649E	
650E	
2161E	

5. REF. DWGS: 45W812-6
45W814-2,-8,-12
6. ALL DIMENSIONS ℄ TO ℄.

CONTROL BLDG UNIT 2

RACEWAY ISOMETRIC
CONDUIT # 2NM-3256E

WATTS BAR NUCLEAR PLANT
TVA / OC

ENGINEER: BRENDA TINKER | DATE: 8-27-85

VERIFICATION:

APPROVED:

DRAWING NO: E 2NM-3256E SP. | R.0

OE & QA SIGNATURES INDICATE ACCEPTANCE TO "WORST CASE"

OE: | QA:

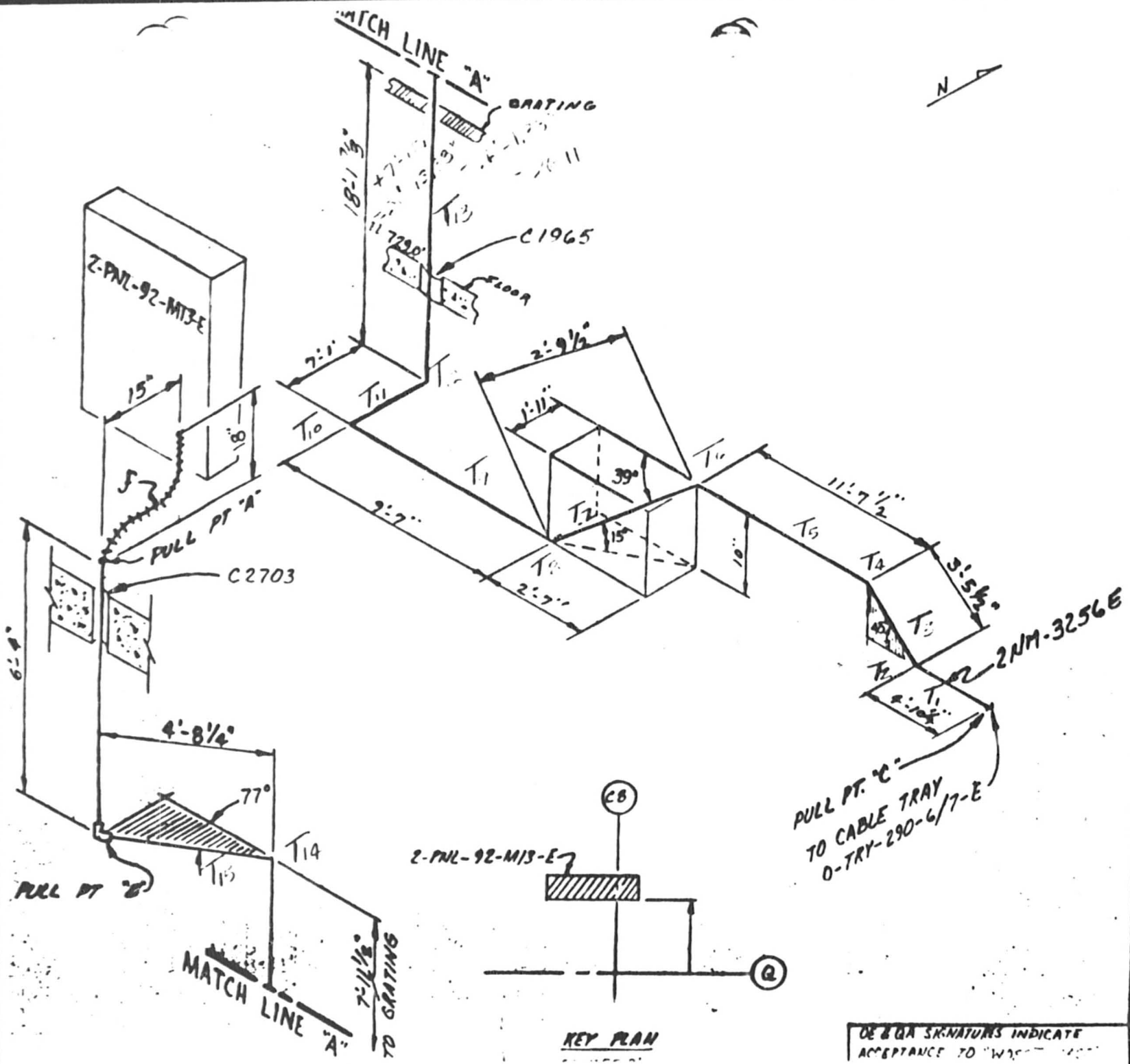

NOTES:

1. ALL BENDS HAVE A RADIUS OF 13" UNLESS OTHERWISE NOTED. (3" ⌀ I CONDUIT)
2. TOLERANCES ARE AS SPECIFIED BY EP 22.2[illegible]
3. ALL BENDS NOT SPECIFIED ARE 90°
4. CABLE UNID | MANUFACTURER

CABLE UNID	MANUFACTURER
2NM240E	
241E	
242E	
243E	
244E	
245E	
246E	
247E	
248E	
249E	
250E	
251E	
260E	
261E	
262E	
263E	
264E	
265E	
266E	
267E	
268E	
269E	
270E	
271E	
281E	
2PM649E	
650E	
2161E	

5. REF. DWGS: 45W812-6, 45W814-2, -8, -12
6. ALL DIMENSIONS ℄ TO ℄.

CONTROL BLDG UNIT 2

RACEWAY ISOMETRIC CONDUIT # 2NM-3256E

WATTS BAR NUCLEAR PLANT

TVA / OC

ENGINEER: [signature] BRENDA TINKER | DATE: 8-24-85

VERIFICATION: [signature]

APPROVED: [signature]

DRAWING NO: N/A EEB EP 22.2[illegible] | SAMPLE [illegible]

OE & QA SIGNATURES INDICATE ACCEPTANCE TO "WO[illegible]" | OE: | QA: