TVA 488 (EN DES 3-77)

CONDUIT 1PLC82B NV2B

P/d = 1.05/.387 K = .3

W_t = .075

COMPUTED KTS DATE 9-16-85

CHECKED JRB DATE 9-19-85

pull B → C

T_1	Horizontal 7'-10"	$T = (7.83)(.3)(.075) = .18$
T_2	Bend 25°	$T = .18e^{(.3)(.44)} = .20$
T_3	Horizontal 2'-0"	$T = .20 + (2)(.3)(.075) = .25$
T_4	Bend 25°	$T = .25e^{(.3)(.44)} = .28$
T_5	Horizontal 8'-8"	$T = .28 + (8.67)(.3)(.075) = .48$
T_6	Bend 28°	$T = .48e^{(.3)(.49)} = .55$
T_7	Straight run 17" slope down 28°	$T = .55 + (\frac{17}{12})(.075)(.3\cos 28° - \sin 28°)$ $T = .53$
T_8	Bend 28°	$T = .53e^{(.3)(.49)} = .61$
T_9	Horizontal 4'-3½"	$T = .61 + (4.29)(.3)(.075) = .71$
T_{10}	Bend 10°	$T = .71e^{(.3)(.17)} = .75$
T_{11}	Straight run 6½" slope down 10°	$T = .75 + (.54)(.075)(.3\cos 10° - \sin 10°)$ $T = .75$
T_{12}	Bend 10°	$T = .75e^{(.3)(.17)} = .79$
T_{13}	Horizontal 5'-6"	$T = .79 + (5.5)(.3)(.075) = .92$
T_{14}	Bend 90°	$T = .92e^{(1.57)(.3)} = 1.47$
T_{15}	Horizontal 5'-0"	$T = 1.47 + (5)(.3)(.075) = 1.58$
T_{16}	Bend 25°	$T = 1.58e^{(.3)(.44)} = 1.80$

TVA 488 (EN DES 3 77)

1PLC82B

COMPUTED KTS DATE 9-16-85
CHECKED JRB DATE 9-19-85

T_{17} Straight run 7" slope up 25° — $T = 1.80 + (\frac{7}{12})(.075)(.3\cos 25° + \sin 25°)$
$T = 1.83$

T_{18} Bend 25° — $T = 1.83\, e^{(.3)(.44)} = 2.09$

T_{19} Horizontal 12" — $T = 2.09 + (1)(.075)(.3) = 2.11$

$SWP = \frac{2.09}{.435} = 4.80$

pull D → C

T_{20} Horizontal 18'-3" — $T = (18.25)(.3)(.075) = .41$

T_{21} Bend 36° — $T = .41\, e^{(.3)(.63)} = .50$

T_{22} Horizontal 12¾" — $T = .50 + (1.06)(.3)(.075) =$
$T = .52$

T_{23} Bend 90° — $T = .52\, e^{(1.57)(.3)}$
$T = .83$

T_{24} Vertical 3'-1⅛" — $T = .83 + (3.13)(.075) = 1.07$

T_{25} Bend 90° — $T = 1.07\, e^{(1.57)(.3)} = 1.71$

T_{26} Horizontal 9'-0" — $T = 1.71 + (9)(.075)(.3) = 1.91$

T_{27} Bend 60° — $T = 1.91\, e^{(1.05)(.3)} = 2.62$

T_{28} Horizontal 11¾" — $T = 2.62 + (.98)(.075)(.3) = 2.64$

T_{29} Bend 60° — $T = 2.64\, e^{(1.05)(.3)} = 3.61$

T_{30} Horizontal 11" — $T = 3.61 + (\frac{11}{12})(.075)(.3) = 3.63$

$SWP = \frac{3.61}{.435} = 8.30$

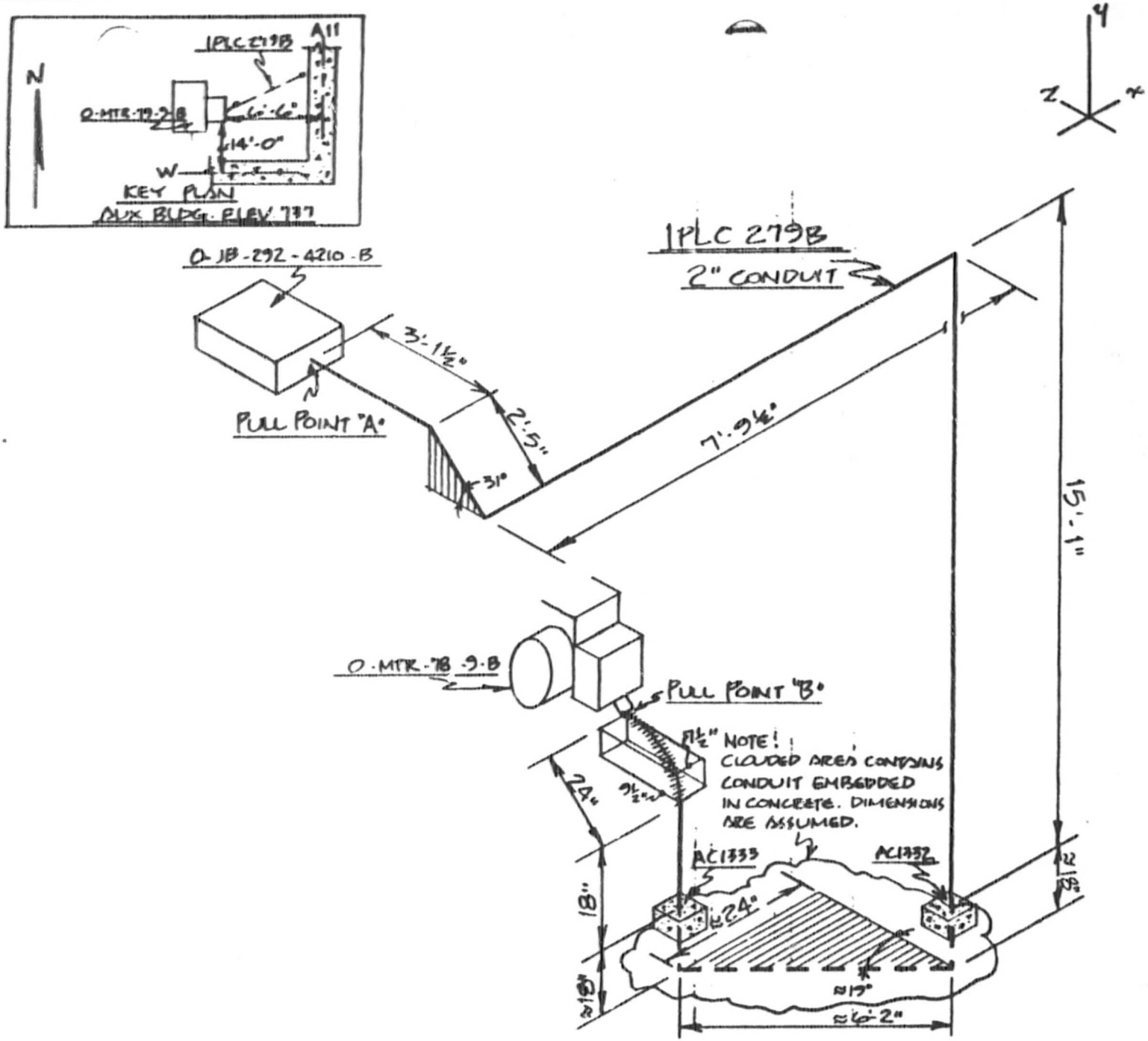

NOTES:

1. ALL BENDS HAVE A RADIUS OF 9½" UNLESS OTHERWISE NOTED. (2" I) CONDUIT
2. TOLERANCES AS SPECIFIED BY EP 22.29
3. ALL BENDS NOT SPECIFIED ARE 90°
4.

CABLE UNID	MANU-FACTURER
1PL4895B	LATER

5. REF. DWG # 45W826-4, 11
6. ALL DIMENSIONS CL TO CL

AUXILIARY BLDG. U-1

RACEWAY ISOMETRIC DWG. ELE. 737' COND. @ 1PLC279B

WATTS BAR NUCLEAR PLANT
TVA/OC

ENGINEER: Marc Cook
DATE: 9/6/85

VERIFICATION: Lawrence D Jackson

APPROVED: [signature]

DRAWING NO: E1PLC279B S.P. R.0

OE: [signature]
QA: 9/9/85 A.W. Rogers

OE & QA SIGNATURES INDICATE ACCEPTANCE TO "WORSE CASE" CRITERIA

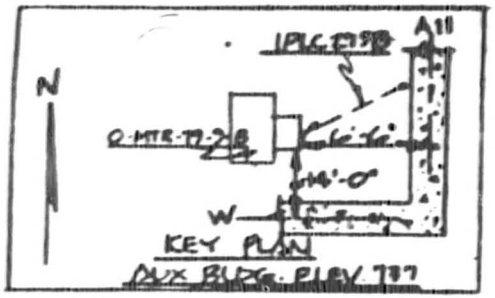

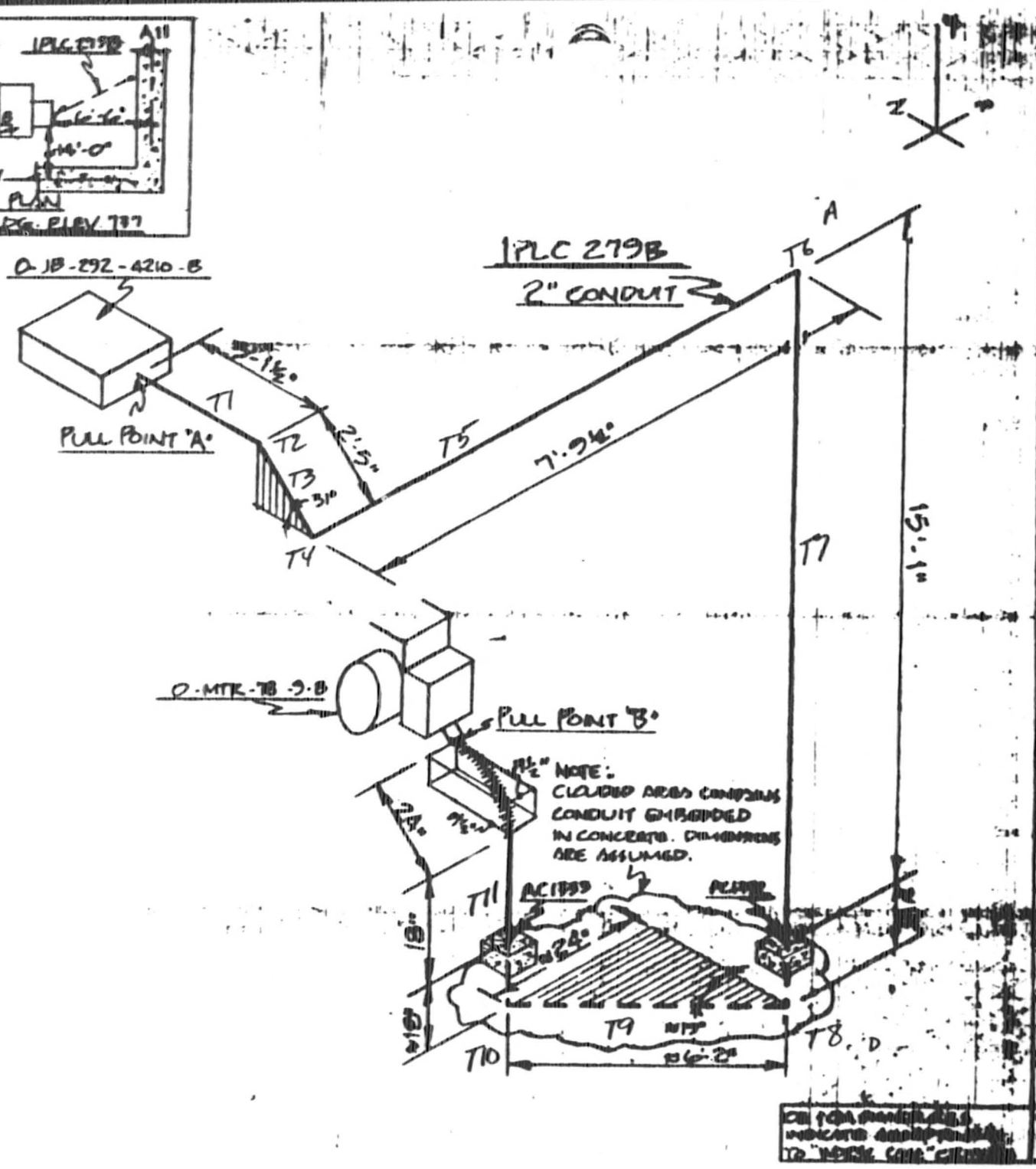

NOTES:

1. ALL BENDS HAVE A RADIUS OF 9½" UNLESS OTHERWISE NOTED. (2"I) CONDUIT
2. TOLERANCES AS SPECIFIED BY EP 22.29
3. ALL BENDS NOT SPECIFIED ARE 90°
4.

CABLE UNID	MANU-FACTURER
1PL4895B	LATER
3-1C # 4/0 WDK	

5. REF. DWG # 45W826-4, 11
6. ALL DIMENSIONS ±1 ±

AUXILIARY BLDG. U-1

RACEWAY ISOMETRIC
DWG. ELEV. 737' CONNECTION

WATTS BAR NUCLEAR PLANT
TVA/OC

N/A 000-GP-[illegible]

TVA 488 (EN DES 3-77)

CONDUIT 1PLC279B NV4B

SHEET 1 OF

$D/d = 2.07/.780 = 2.65$ $w_c = 1.48$

$W_t = 3 \times .757 = 2.27$ $K = .44$

~~R = 44/12 = .79~~

COMPUTED KTS DATE 9-13-85

CHECKED JRB DATE 9-15-85

pull B → A

Assume $T_{10} = 200$

T_6 Horizontal 6'-2" $T = 6.17 \times .44 \times 2.27 = 6.22$

T_8 Bend 90° $T = 6.22 e^{(1.57)(.44)} = 12.49$

T_7 Vertical 15'-1" up $T = 12.49 + (15.08)(2.27)$
$T = 46.74$

T_6 Bend 90° $T = 46.74 e^{(1.57)(.44)} = 93.89$

T_5 Horizontal 7'-9½" $T = 93.89 + (7.79)(.44)(2.27) = 101.75$

T_4 Bend 90° $T = 101.75 e^{(.44)(1.57)} = 204.36$

T_3 Straight run 2'-5" slope up 31° $T = 204.36 + (2.42)(2.27)(.44 \cos 31° + \sin 31°)$
$T = 209.28$

T_2 Bend 31° $T = 209.28 e^{(.44)(.54)}$
$T = 266.11$

T_1 Horizontal 3'-1½" $T = 266.11 + (3.13)(.44)(2.27) =$
$T = 269.26$

$SWP = \frac{1}{3}(3 \times 1.48 - 2)\left(\frac{266.11}{.705}\right) =$ ~~299.39~~ 307.06

TVA 488 (EN DES 3 77)

IPLC 279B NV4B

SHEET 1 OF 2

$D/d = 2.07/.75 = 2.65$ $w_c = 1.48$ $K = .444$

$w_s = 3 \times .757 = 2.27$

COMPUTED KTS DATE 9-20-85

CHECKED JRB DATE 9-21-85

Worked using long form of vertical bend equation

$$\frac{w_s R}{1+K^2} = \frac{(2.27)(.75)}{1+(.444)^2} = 1.50$$

$$(1 - K^2 w_c^2) = (1 - .444^2 \times 1.48^2) = .57$$

pull B-A

T_a Horizontal 6'-2" $T = 6.17 \times .444 \times 2.27 = 6.22$

T_b Bend 90° (D)

$$T_b = 6.22\, e^{(.444)(1.57)} - 1.50\left[2(.444)\sin 90° - .57\left(e^{(.444)(1.57)} - \cos 90°\right)\right]$$

$$= 6.22 \times 2.01 - 1.50\left[.888 - .57 \times 2.01\right]$$

$$= 12.49 + .39$$

$$= 12.88$$

T_7 Vertical 15'-1" $T = 12.88 + (15.08)(2.27) = 47.13$

T_6 Bend 90° (A)

$$T_6 = 47.13 \times 2.01 + 1.50\left[2(.444)(2.01) + (.57)\right]$$

$$T_6 = 94.66 + 3.54$$

$$T_6 = 98.20$$

T_5 Horizontal 7'-9½" $T = 98.20 + (7.79)(.444)(2.27)$

$T = 106.05$

T_4 Bend 90° (D)

$$T_4 = 106.05 \times 2.01 - 1.50\left[2(.444) - .57(2.01)\right]$$

$$T_4 = 213.01 + .39$$

$$T_4 = 213.40$$

T_3 Straight run 2'-5" slope up 31° $T = 213.40 + (2.42)(2.27)(.44\cos 31 + \sin 31)$

$T = 218.31$

TVA 488 (EN DES 3-77)

1PLC 279B

COMPUTED KTS DATE 9-20-85

CHECKED JRB DATE 9-21-85

T_2 Bend 31° (A)

$T_2 = 218.31\, e^{(.444)(.54)} + 1.50\left[2(.444)\, e^{(.444)(.54)} \sin 31° + .57(1 - e^{(.444)(.54)} \cos 31°)\right.$

$T_2 = 218.31 \times 1.27 + 1.50\left[2(.444)(1.27)(.52) + .57(1 - 1.27 \times .86)\right.$

$T_2 = 277.59 + 1.50\left[.58 - .05\right]$

$T_2 = 277.59 + .80$

$T_2 = 278.39$

T_1 Horizontal 3'-1½" $T = 278.39 + (3.13)(.444)(2.27)$

$T = 281.54$

$SWP = \frac{1}{3}(3 \times 1.48 - 2)\left(\frac{278.39}{.705}\right) = 321.17$

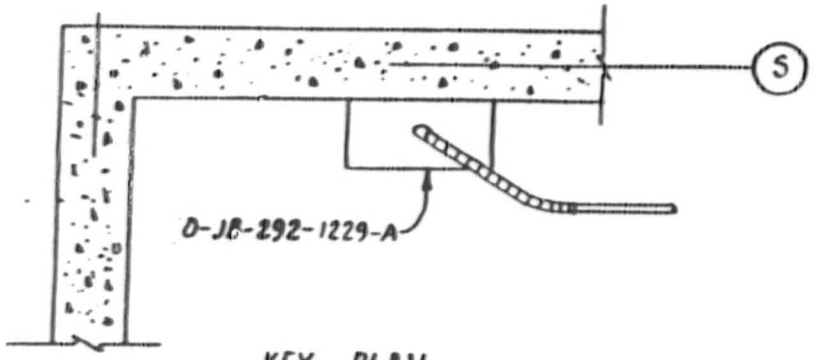

KEY PLAN
FLOOR ELEVATION 757.0'
NTS.

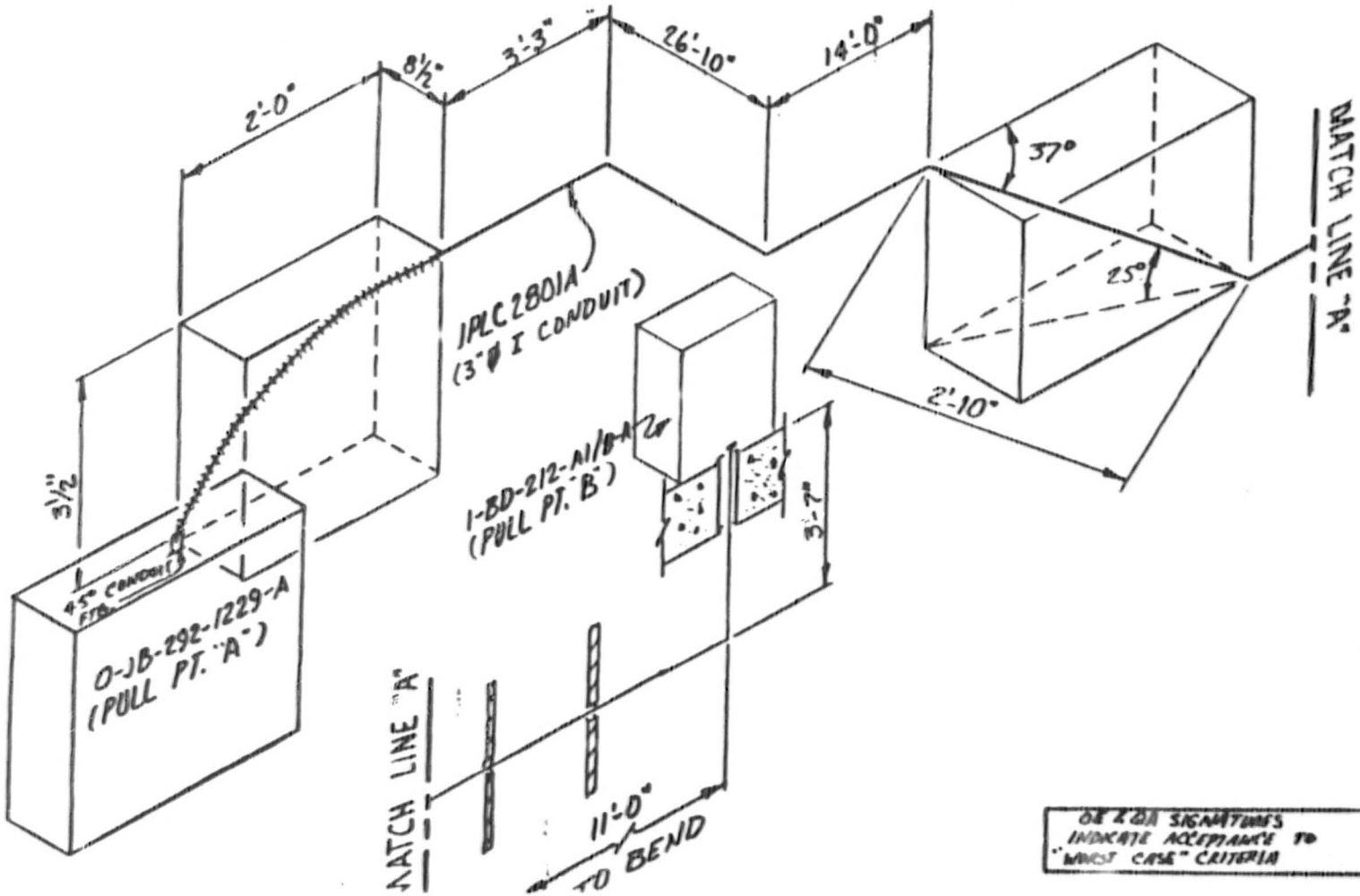

NOTES:

1. ALL BENDS HAVE A RADIUS OF 13" UNLESS OTHERWISE NOTED. (3"ØI CONDUIT)
2. TOLERANCES AS SPECIFIED BY EP-22.29
3. ALL BENDS NOT SPECIFIED ARE 90°
4.

CABLE UNID	MANU-FACTURER
1PL4976A	[illegible]

5. REF. DWG # 45W826-8 45W828-13
6. ALL DIMENSIONS CL TO CL

AUX. BLDG. UNIT 1

RACEWAY ISOMETRIC
DWG. ELE. 737' COND. # 1PLC2801A

WATTS BAR NUCLEAR PLANT
TVA/OC

ENGINEER: Roger A. Brown
DATE: 9-6-85

VERIFICATION: J.W. [illegible]

APPROVED: [illegible]

DRAWING NO: E1PLC2801A S.P. R.O.

OE & QA SIGNATURES INDICATE ACCEPTANCE TO "WORST CASE" CRITERIA

OR: Jim M. Moon [illegible]
QA: J.W. Rogers 9/4/85

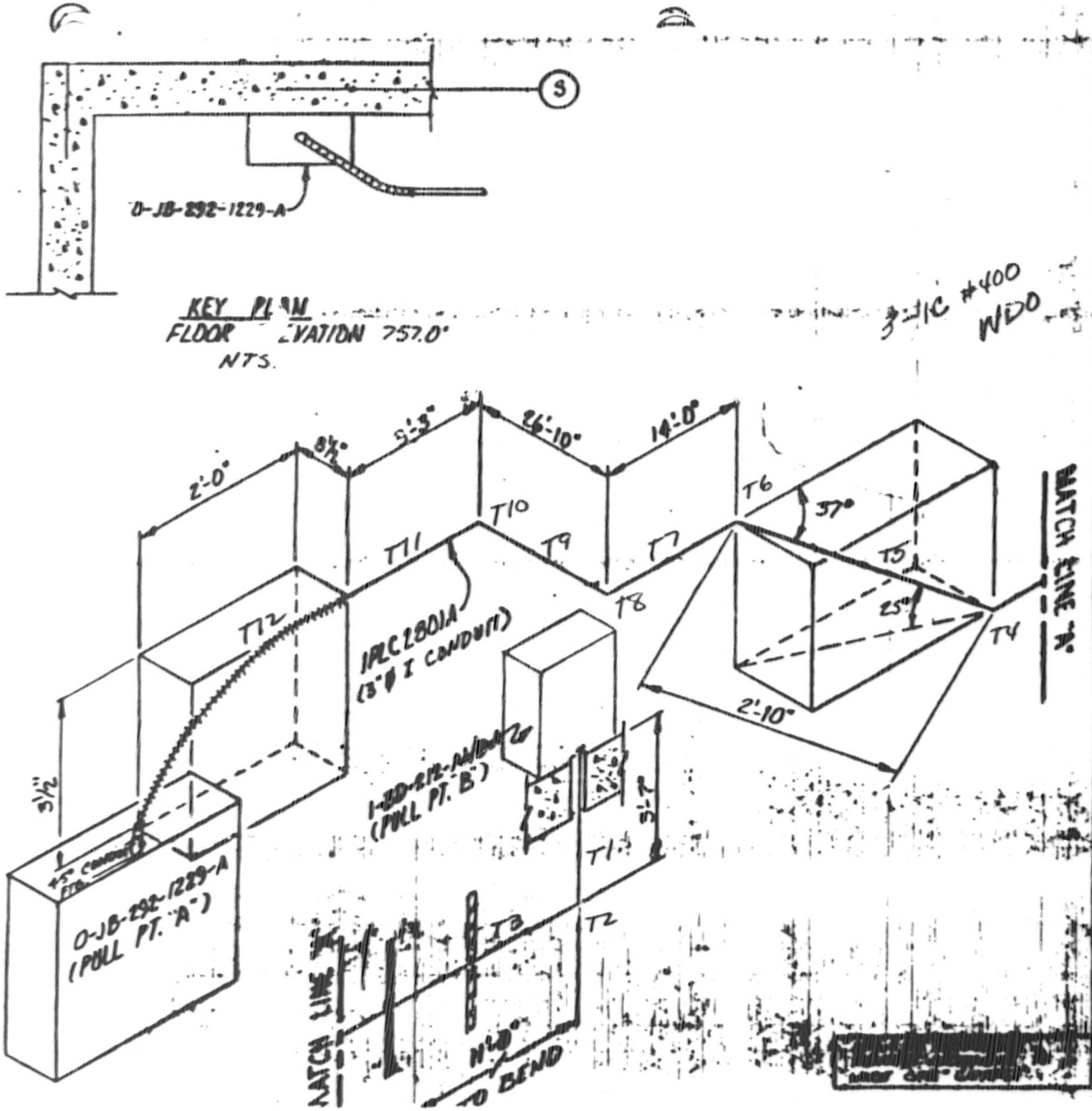

NOTES:

1. ALL BENDS HAVE A RADIUS OF 13" UNLESS OTHERWISE NOTED. (3"Ø I CONDUIT)
2. TOLERANCES AS SPECIFIED BY EP-22.21
3. ALL BENDS NOT SPECIFIED ARE 90°
4. CABLE UNID | MANUFACTURER
   1PL4976A | [illegible]
5. REF. DWG. # [illegible]
6. ALL DIMENSIONS [illegible]

AUX. BLDG. UNIT 1

RACEWAY ISOMETRIC
DWG. EL. 737' [illegible]

[illegible] NUCLEAR PLANT
TVA/DC

[illegible]

[illegible]

[illegible]

TVA 488 (EN DES 3-77)

CONDUIT 1PLC 2801A NV4A

SHEET 1 OF 2

$D/d = 3.07/1.051 = 2.92$ $W_c = 1.35$

$W_t = 1.398 \times 3 = 4.19$ $K = .41$

~~$T_2 = T_1 = 1.08$~~

COMPUTED KTS DATE 9-12-85

CHECKED JRB DATE 9-15-85

pull ~~A → B~~ B → A

Assume T_2 = zero

T_3 Horizontal 11'-0" $T = (11)(4.19)(.41) = 18.68$

T_4 Bend 37° $T = 18.68\, e^{(.41)(.65)} = 24.27$

T_5 Straight run 2'-10" slope up 25° $T = 24.27 + (2.83)(4.19)(.41\cos 25 + \sin 25$
$T = 33.65$

T_6 Bend 37° $T = 33.65\, e^{(.41)(.65)} =$
$T = 43.71$

T_7 Horizontal 14'-0" $T = 43.71 + (14)(4.19)(.41)$
$T = 67.49$

T_8 Bend 90° $T = 67.49\, e^{(.41)(1.57)} = 127.51$

T_9 Horizontal 26'-10" $T = 127.51 + (26.83)(4.19)(.41)$
$T = 173.09$

T_{10} Bend 90° $T = 173.09\, e^{(.41)(1.57)} = 327.00$

T_{11} Horizontal 3'-3" $T = 327.00 + (3.25)(4.19)(.41)$
$T = 332.53$

Slip at T_{10} = $\frac{1}{3}(3 \times 1.15 - 2)\left(\frac{327.00}{.955}\right)$ = ~~206.56~~ 233.98

TVA 488 (EN DES 3-77)

IPLC 2E01A

COMPUTED KTS DATE 9-12-85

CHECKED JRB DATE 9-15-85

pull A → B

T_{11}	Horizontal 3'-3"	$T = (3.25)(4.19)(.41) = 5.58$
T_{10}	Bend 90° "	$T = 5.58\, e^{(.41)(1.57)} = 10.63$
T_6	Horizontal 26'-10"	$T = 10.63 + (26.83)(4.19)(.41) = 56.72$
T_5	Bend 90° "	$T = 56.72\, e^{(1.57)(.41)} = 108.01$
T_3	Horizontal 14'-0"	$T = 108.01 + (14)(4.19)(.41) = 132.06$
T_4	Bend 37° "	$T = 132.06\, e^{(.41)(.65)} = 172.42$
T_5	Straight run 2'-10" down 25°	$T = 172.42 + (2.83)(4.19)(.41)(\cos 25 - \sin 25)$ $T = 171.81$
T_4	Bend 37° "	$T = 171.81\, e^{(.41)(.65)} = 223.92$
T_2	Horizontal 11'-0"	$T = 223.92 + (11)(4.19)(.41) = 242.82$
T_2	Bend 90° "	$T = 242.82\, e^{(.41)(1.57)} = 462.40$
T_1	Vertical 3'-7"	$T = 462.40 + (3.58)(4.19) = 477.40$

$$SWP = \tfrac{1}{3}(3 \times 1.35 \cdot 2)\ \frac{462.40}{.455} = 330.86$$

TVA 488 (EN DES 3-77)

CONDUIT 1PLC 2801A NV4A

SHEET 1 OF 2

$D/d = 3.07/1.051 = 2.92$ $w_o = 1.35$ $K = .405$

$w_t = 1.398 \times 3 = 4.194$

COMPUTED KTS DATE 9-20-85

CHECKED JRB DATE 9-21-85

Calculation using long form of vertical bend equation

$$\frac{w_o l^2}{1+K^2} = \frac{4.194 \times 1.0E}{1+.405^2} = 3.90$$

$$(1-K^2 w_o^2) = 1-(.405)^2(1.35)^2 = .701$$

pull A → B (excluding flex at T_{12})

T_{11} Horizontal 3'-3" $T = 3.25 \times 4.194 \times .405 = 5.52$

T_{10} Horiz Bend 90° $T = 5.52\, e^{(.41)(1.57)} = 10.43$

T_9 Horizontal 26'-10" $T = 10.43 + (26.83)(4.194)(.405) = 56.01$

T_8 Horiz Bend 90° $T = 56.01\, e^{(.41)(1.57)} = 105.81$

T_7 Horizontal 14'-0" $T = 105.81 + (14)(4.194)(.405) = 129.59$

T_6 Vert Bend 37° (C)

$$T = 129.59\, e^{(.405)(.65)} + 3.90\left[2(.405)\sin 37° - .701\left(e^{(.405)(.65)} - \cos 37°\right)\right]$$

$$T = 129.59 \times 1.30 + 3.90\left[2(.405)(.60) - .701(1.30 - .80)\right]$$

$$T = 168.33 + .53$$

$$T = 168.86$$

T_5 Straight run 2'-10" $T = 168.86 + (2.83)(4.194)(.405\cos 25 - \sin 25)$

slope down 25° $T = 168.20$

T_4 Vert Bend 37° (B)

$$T = 168.20 \times 1.30 - 3.90\left[2(.405)(1.30)(.60) + .701(1 - 1.30 \times .80)\right]$$

$$T = 218.48 - 3.90(.64 - .03)$$

$$T = 218.48 - 2.37$$

$$T = 216.11$$

TVA 488 (EN DES 3 77)

IPLC 2801 A

COMPUTED KTS DATE 9-20-85

CHECKED JRB DATE 9-21-85

T_3 Horizontal 11'-0" $T = 216.11 + (1)(4.194)(.405)$

$T = 234.80$

T_2 Bend 90° (D)

$T = 234.80\, e^{(.405)(1.57)} - 3.90\left[2(.405) - .701\, e^{(.405)(1.57)}\right]$

$T = 234.80 \times 1.89 - 3.90\left[.81 - 1.32\right]$

$T = 443.58 + 2.01$

$T = 445.59$

T_1 Vertical 3'-7" $T = 445.59 + (3.58)(4.194)$

$T = 460.62$

$SWP = \frac{1}{2}(3 \times 1.35 - 2)\ \frac{445.59}{.955} = 318.83$

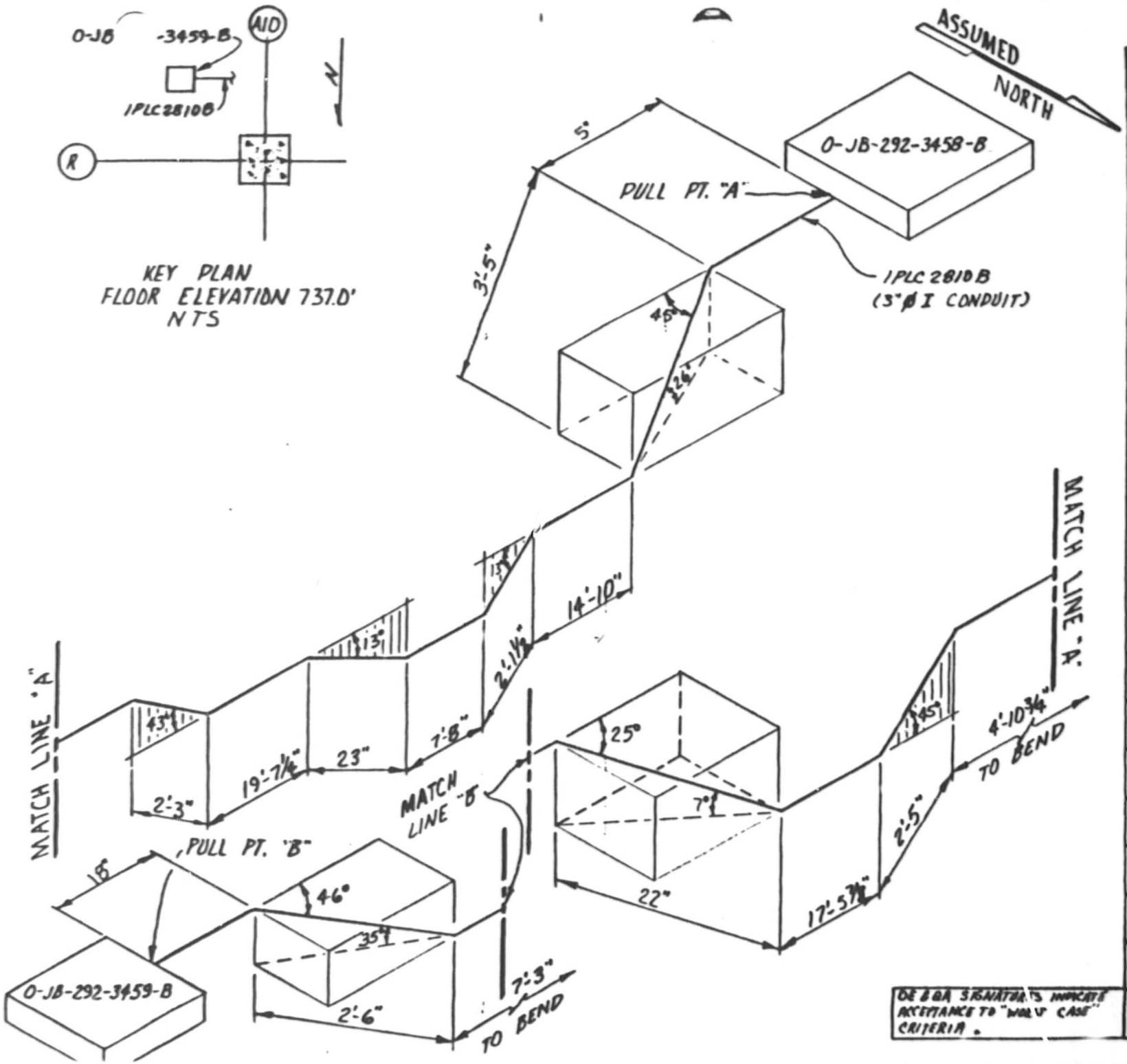

NOTES:

1. ALL BENDS HAVE A RADIUS OF 13" UNLESS OTHERWISE NOTED. (3"Ø I CONDUIT)
2. TOLERANCES AS SPECIFIED BY E.P. 22.29
3. ALL BENDS NOT SPECIFIED ARE 90°
4.

CABLE UNID	MANU-FACTURER
1PL4983B	Rotor

5. REF. DWG # 45W826-20
6. ALL DIMENSIONS a to c

AUX. BLDG UNIT 1

RACEWAY ISOMETRIC
DWG. ELE. 737.0' COND. # 1PLC2810B

WATTS BAR NUCLEAR PLANT
TVA/OC

ENGINEER: Roger A. Brown — DATE: 9-6-85

VERIFICATION: Charles L. Colvin Jr.

APPROVED: [signature]

DRAWING NO: E 1PLC 2810 B S.R — R0

OE & QA SIGNATURES INDICATE ACCEPTANCE TO "WORST CASE" CRITERIA.

OE: Joseph A. Ferrer — QA: T. N. Rogers — 9/9/85

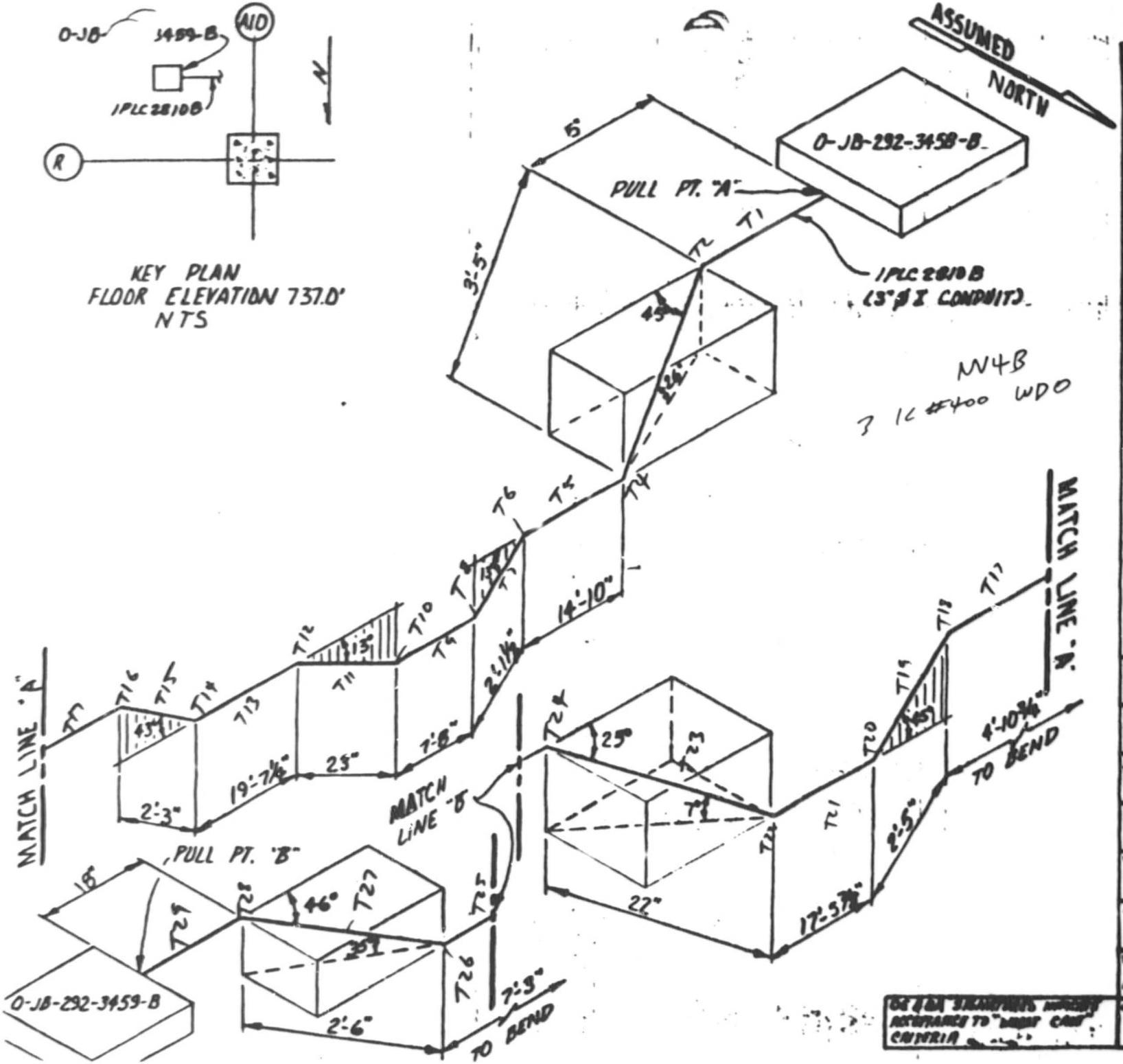

NOTES:

1. ALL BENDS HAVE A RADIUS OF 13" UNLESS OTHERWISE NOTED. (3"ø I CONDUIT)
2. TOLERANCES AS SPECIFIED BY E.P 22.29
3. ALL BENDS NOT SPECIFIED ARE 90°
4.

CABLE UNID	MANU-FACTURER
1PL4983B	[illegible]

5. REF. DWG # 45W826-20
6. ALL DIMENSIONS c to c

1PLC2810B

AUX. BLDG UNIT 1

RACEW - ISOMETRIC
DWG. E: 57B [illegible]

MIFFS BAR NUCLEAR PLANT
TVA/OC

Engineer: [illegible] Date: 9-6-85

Verification: Charles L. [illegible]

Approved: [illegible]

Drawing No: N/A EEB EP 22.29 SAMPLE PROGRAM

OC & QA SIGNATURES INDICATE ACCEPTANCE TO "WHAT CAN" CRITERIA

OC: QA: 9/9/85 [illegible]

TVA 488 (EN DES 3-77)

CONDUIT 1PLC 2810 B NV4B

SHEET 1 OF 4

$D/d = 3.07/1.051 = 2.92$ $w_c = 1.36$

$w_t = 1.298 \times 3 = 4.19$ $\mu = .41$

COMPUTED KTS DATE 9-16-85

CHECKED JBB DATE 9-18-85

pull A → B

T_1 Horizontal 5" $T = (\frac{5}{12})(.41)(4.19) = .71$

T_2 Bend 45° $T = .71 e^{(.76)(.41)} = .98$

T_3 Straight run 3'-5" slope down 26° $T = .98 + (3.42)(4.19)(.41\cos 26 - \sin 26)$ $T = -.04$

Assume T_3 = zero

T_5 Horizontal 14'-10" $T = (14.83)(.41)(4.19) = 25.38$

T_6 Bend 13° $T = 25.38 e^{(.23)(.41)} = 27.84$

T_7 Straight run 2'-1½" slope down 13° $T = 27.84 + (2.13)(4.19)(.41\cos 13 - \sin 13)$ $T = 29.38$

T_8 Bend 13° $T = 29.38 e^{(.23)(.41)} = 32.23$

T_9 Horizontal 7'-8" $T = 32.23 + (7.67)(.41)(4.19) = 45.35$

T_{10} Bend 13° $T = 45.35 e^{(.23)(.41)} = 49.75$

T_{11} Straight run 23" slope up 13° $T = 49.75 + (\frac{23}{12})(4.19)(.41\cos 13° + \sin 13°)$ $T = 54.75$

T_{12} Bend 13° $T = 54.75 e^{(.23)(.41)} = 60.06$

T_{13} Horizontal 19'-7¼" $T = 60.06 + (19.60)(.41)(4.19)$ $T = 93.61$

T_{14} Bend 43° $T = 93.61 e^{(.75)(.41)} = 127.15$

T_{15} Straight run 2'-3" slope up 43° $T = 127.15 + (2.25)(.41\cos 43° + \sin 43°)\,4.19$ $T = 136.40$

COMPUTED KTS DATE 9-16-85
CHECKED JRB DATE 9-18-85

T_{16} Bend 43° $T = 136.40\, e^{(.75)(.41)} = 185.26$

T_{17} Horizontal 4'-10¾" $T = 185.26 + (4.90)(4.19)(.41) = 193.64$

T_{18} Bend 45° $T = 193.64\, e^{(.41)(.79)} = 266.78$

T_{19} Straight run 2'-5" slope down 45° $T = 266.78 + (2.42)(4.19)(.41\cos 45° - \sin 45°)$
$T = 262.83$

T_{20} Bend 45° $T = 262.83\, e^{(.41)(.79)} = 362.12$

T_{21} Horizontal 17'-5⅞" $T = 362.12 + (17.45)(.41)(4.19)$
$T = 392.04$

T_{22} Bend 25° $T = 392.04\, e^{(.41)(.44)} = 468.44$

T_{23} Straight run 22" slope up 7° $T = 468.44 + (\frac{22}{12})(4.19)(.41\cos 7° + \sin 7°)$
$T = 472.49$

T_{24} Bend 25° $T = 472.49\, e^{(.41)(.44)} = 564.55$

T_{25} Horizontal 7'-3" $T = 564.55 + (7.25)(.41)(4.15)$
$T = 576.96$

T_{26} Bend 46° $T = 576.96\, e^{(.41)(.80)} = 800.58$

T_{27} Straight run 2'-6" slope up 35° $T = 800.58 + (2.5)(4.15)(.41\cos 35° + \sin 35°)$
$T = 810.09$

T_{28} Bend 46° $T = 810.09\, e^{(.41)(.80)} = 1124.07$

T_{29} Straight run 18" $T = 1124.07 + (\frac{18}{12})(4.15)(.41) = 1126.64$

$SWP = \frac{1}{3}(3 \times 1.36 - 2)\left(\frac{1124.07}{.955}\right) = 816.08$

Bends in conduit = 447 degrees

TVA 488 (EN DES 3-77)

1PLC2810B

COMPUTED KTS DATE 9-16-85

CHECKED JRB DATE 9-18-85

pull B → A

T_{26} Straight run 18" $T = (\frac{18}{12})(.41)(4.19) = 2.57$

T_{28} Bend 46° $T = 2.57 e^{(.41)(.80)} = 3.56$

T_{27} Straight run 2'-6" slope down 35° $T = 3.56 + (2.5)(4.19)(.41 \cos 35° - \sin 35°)$ $T = 1.05$

T_{26} Bend 46° $T = 1.05 e^{(.41)(.80)} = 1.46$

T_{25} Horizontal 7'-3" $T = 1.46 + (7.25)(.41)(4.19) = 13.87$

T_{24} Bend 25° $T = 13.87 e^{(.41)(.44)} = 16.57$

T_{22} Straight run 22" slope down 7° $T = 16.57 + (\frac{22}{12})(4.19)(.41 \cos 7° - \sin 7°)$ $T = 18.74$

T_{22} Bend 25° $T = 18.74 e^{(.41)(.44)} = 22.40$

T_{21} Horizontal 17'-5 7/8" $T = 22.40 + (17.49)(.41)(4.19) =$ $T = 52.32$

T_{20} Bend 45° $T = 52.32 e^{(.41)(.79)} = 72.09$

T_{19} Straight run 2'-5" slope up 45° $T = 72.09 + (2.42)(4.19)(.41 \cos 45° + \sin 45°$ $T = 82.18$

T_{18} Bend 45° $T = 82.18 e^{(.41)(.79)} = 113.22$

T_{17} Horizontal 4'-10 3/4" $T = 113.22 + (4.60)(4.19)(.41)$ $T = 121.61$

T_{16} Bend 43° $T = 121.61 e^{(.75)(.41)} = 165.17$

T_{15} Straight run 2'-3" slope down 43° $T = 165.17 + (2.25)(4.19)(.41 \cos 43° - \sin 43°$ $T = 161.55$

TVA 468 (EN DES 3-77)

1 PLC 2810B

COMPUTED KTS DATE 9-16-85

CHECKED JRB DATE 9-18-85

T_{14} Bend 43° $T = 161.55\, e^{(.75)(.31)} = 219.43$

T_{13} Horizontal 19'-7½" $T = 219.43 + (19.60)(.41)(4.19)$
$T = 252.97$

T_{12} Bend 13° $T = 252.97\, e^{(.23)(.41)} = 277.50$

T_{11} Straight run 23" slope down 13° $T = 277.50 + (\frac{23}{12})(4.19)(.41\cos 13 - \sin 13)$
$T = 278.89$

T_{10} Bend 13° $T = 278.89\, e^{(.23)(.41)} = 305.94$

T_9 Horizontal 7'-8" $T = 305.94 + (7.67)(.41)(4.19) = 319.06$

T_8 Bend 13° $T = 319.06\, e^{(.23)(.41)} = 350.01$

T_7 Straight run 2'-1½" slope up 13° $T = 350.01 + (2.13)(4.19)(.41\cos 13° + \sin 13°)$
$T = 355.57$

T_6 Bend 13° $T = 355.57\, e^{(.23)(.41)} = 390.06$

T_5 Horizontal 14'-10" $T = 390.06 + (14.83)(.41)(4.19) = 415.44$

T_4 Bend 45° $T = 415.44\, e^{(.78)(.41)} = 572.37$

T_3 Straight run 3'-5" slope up 26° $T = 572.37 + (3.42)(4.19)(.41\cos 26 + \sin 26)$
$T = 583.90$

T_2 Bend 45° $T = 583.90\, e^{(.78)(.41)} = 804.46$

T_1 Horizontal 5" $T = 804.46 + (\frac{5}{12})(.41)(4.19) = 805.18$

$SWP = \frac{1}{3}(3 \times 1.36 - 2)\left(\frac{804.46}{.955}\right) = 554.04$

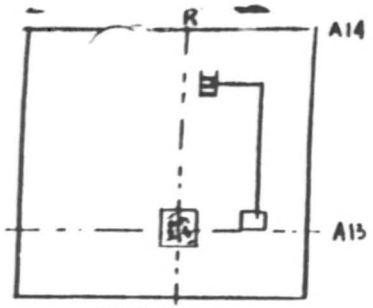

KEY PLAN
AUX BLDG. UNIT 1
ELEV. 737'-0"

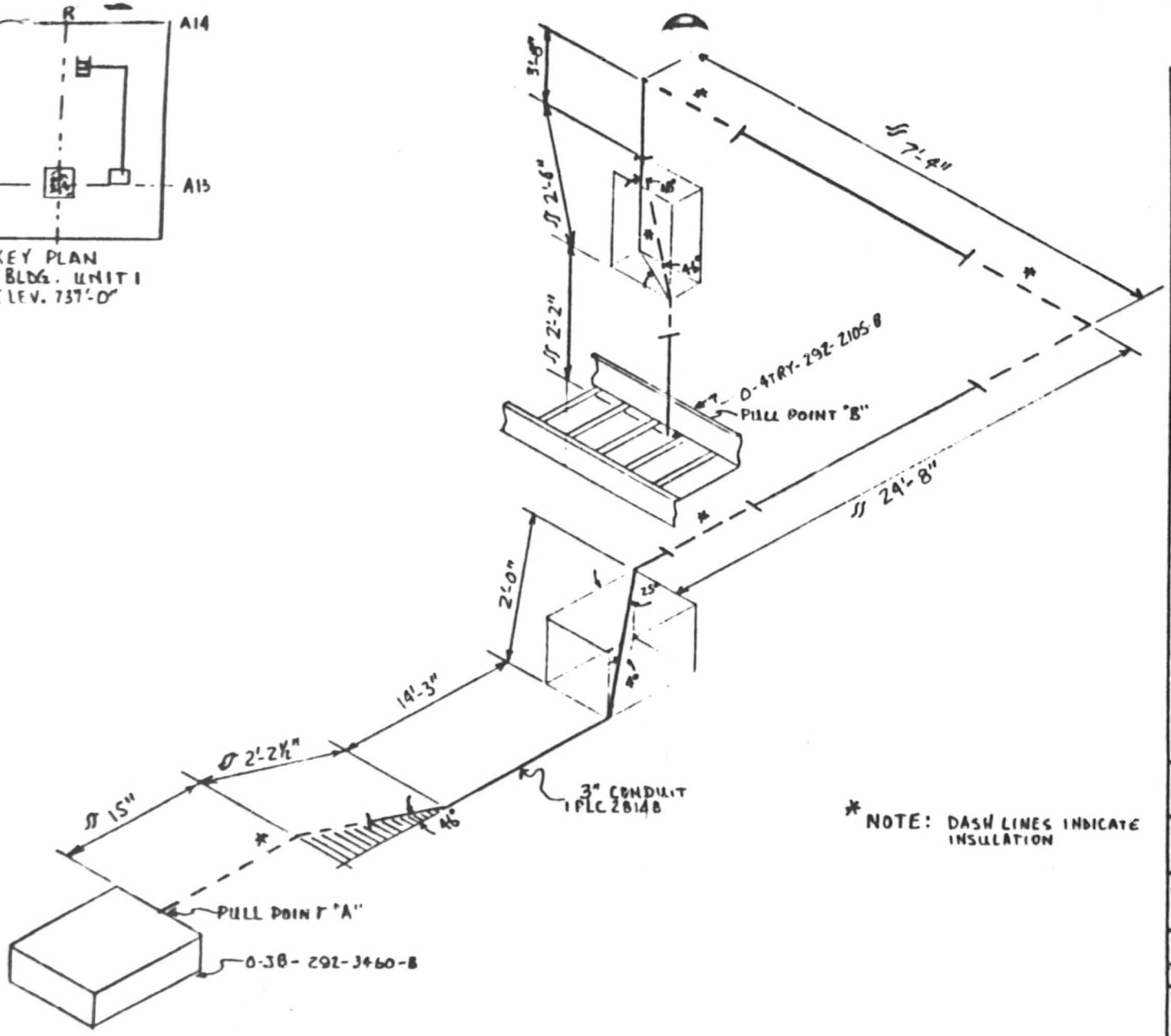

* NOTE: DASH LINES INDICATE INSULATION

NOTES:

1. ALL BENDS HAVE A RADIUS OF 13" UNLESS OTHERWISE NOTED. (3"I) CONDUIT
2. TOLERANCES AS SPECIFIED BY EP-22.20
3. ALL BENDS NOT SPECIFIED ARE 90°
4.

CABLE UNID	MANU-FACTURER
1PL4983B	LATER

5. REF. DWG # 45W826-9
6. ALL DIMENSIONS CL TO CL

AUXILIARY BUILDING UNIT-1

RACEWAY ISOMETRIC DWG. ELE. 737' COND. # 1PLC2814B

WATTS BAR NUCLEAR PLANT
TVA/OC

ENGINEER: Lawrence D. Jackson
DATE: 9-5-85

VERIFICATION: J.W. Howe

APPROVED: [signature]

DRAWING NO: E1PLC2814B S.P. R.0

OE/QA SIGNATURES SIGNIFY ACCEPTANCE TO "WORSE CASE" CRITERIA.

OE: Jay A Fowler
QA: T.W. Kogan

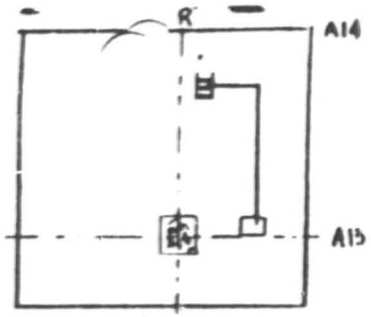

KEY PLAN
AUX BLDG. UNIT 1
ELEV. 737'-0"

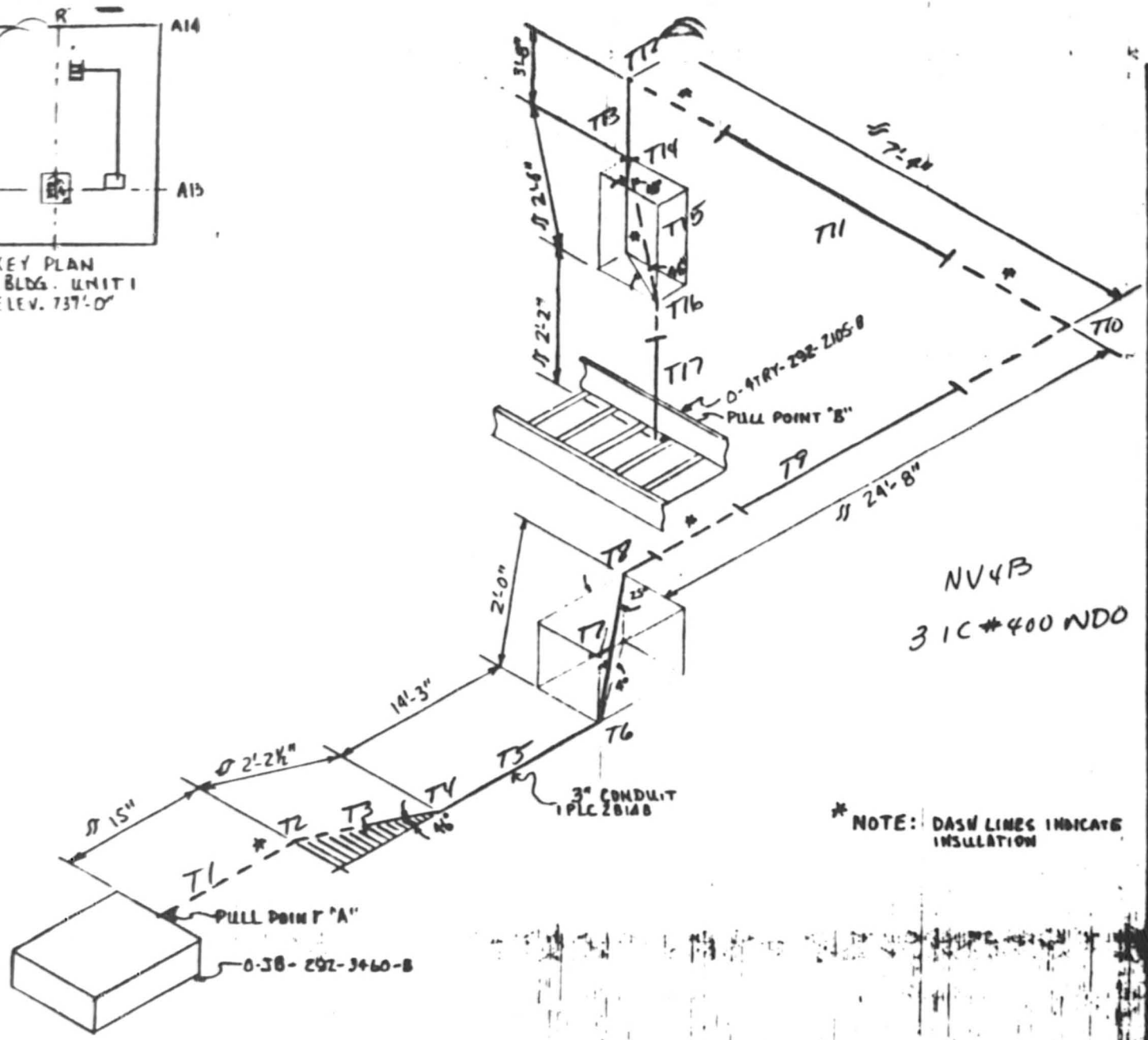

* NOTE: DASH LINES INDICATE INSULATION

NOTES:

1. ALL BENDS HAVE A RADIUS OF 13" UNLESS OTHERWISE NOTED. (3"I) CONDUIT
2. TOLERANCES AS SPECIFIED BY EP-22.20
3. ALL BENDS NOT SPECIFIED ARE 90°
4.

CABLE UNID	MANU-FACTURER
1PL4983B	LATER

5. REF. DWG # 45W826-9
6. ALL DIMENSIONS [illegible]

AUXILIARY BUILDING
UNIT-1

RACEWAY ISOMETRIC
DWG. ELE. 737' COND. # 1PLC2B14B

WATTS BAR NUCLEAR PLANT
TVA/OC

[illegible]

[illegible]

[illegible]

[illegible]

[illegible]

DESIGN SIGNATURES SIGNIFY ACCEPTANCE TO WORSE CASE CRITERIA.

TVA 488 (EN DES-3-77)

CONDUIT 1PLC2814B NV4B

$K = 0.3$ $D/d = 3.07/1.051 = 2.92$ $w_c = 1.35$

$W_c = 1.36E \times 3 = 4.19$

$K = 0.41$

COMPUTED KTS DATE 9-10-85

CHECKED JRB DATE 9-15-85

pull from B to A

T_{12} Vertical 2'-2" up $T = (2.17)(4.19) = 9.09$

T_{16} Bend 48° A $T = 9.09\, e^{(.41)(.84)} = 12.76$

T_{15} Straight run 2'-6" up 46° $T = 12.76 + (2.5)(4.19)(.41\cos 46° + \sin 46°)$
$T = 23.25$

T_{14} Bend 48° A $T = 23.25\, e^{(.41)(.84)} = 32.64$

T_{13} Vertical 3'-8" up $T = 32.64 + (3.67)(4.19)$
$T = 48.02$

T_{12} Bend 90° A $T = 48.02\, e^{(1.57)(.41)} = 90.72$

T_{11} Horizontal 7'-4" $T = 90.72 + (7.33)(.41)(4.19)$
$T = 103.18$

T_{10} Bend 90° $T = 103.18\, e^{(.41)(1.57)} = 196.52$

T_9 Horizontal 24'-8" $T = 196.52 + (24.67)(.41)(4.19)$
$T = 238.89$

T_8 Bend 25° C $T = 238.89\, e^{(.41)(.44)} = 285.71$

T_7 Straight run 2'-0" down 4° $T = 285.71 + (2)(4.19)(.41\cos 4° - \sin 4°)$
$T = 288.55$

T_6 Bend 25° B $T = 288.55\, e^{(.41)(.44)} = 345.10$

T_5 Horizontal 14'-3" $T = 345.10 + (14.25)(.41)(4.19)$
$T = 369.58$

T_4 Bend 46° $T = 369.58\, e^{(.41)(.80)} = 513.72$

COMPUTED KTS DATE 9-10-85
CHECKED JRB DATE 9-15-85

T_3 Horizontal 2'-2½" $T = 513.72 + (2.21)(.41)(4.19)$
$T = 517.52$

T_2 Bend 46° $T = 517.52 e^{(.41)(.80)}$
$T = 718.56$

T_1 Horizontal 15" $T = 718.56 + (1.25)(.41)(4.19)$
$T = 720.71$

SWP at $T_2 = \frac{1}{3}(3w_c - 2)\left(\frac{T}{R}\right) = \frac{1}{3}(3 \times 1.35 - 2)\left(\frac{718.56}{.955}\right) = 514.15$
pull for A to B

T_1 Horizontal 15" $T = (1.25)(.41)(4.19)$
$T = 2.12$

T_2 Bend 46° $T = 2.12\, e^{(.41)(.80)} = 2.94$

T_3 Horizontal 2'-2½" $T = (2.21)(.41)(4.19) + 2.94$
$T = 6.69$

T_4 Bend 46° $T = e^{(.41)(.80)} \times 6.69 = 9.26$

T_5 Horizontal 14'-3" $T = (14.25)(.41)(4.19) + 9.26$
$T = 33.74$

T_6 Bend 25° $T = e^{(.41)(.44)} \times 33.74 = 40.35$

T_7 Straight run 2'-0" up 4° $T = (2)(4.19)(.41 \cos 4° + \sin 4°) + 40.35$
$T = 44.36$

T_8 Bend 25° $T = e^{(.41)(.44)} \times 44.36 = 53.05$

T_9 Horizontal 24'-8" $T = (24.67)(.41)(4.19) + 53.05$
T 95.42

T_{10} Bend 90° $T = e^{(.41)(1.57)} \times 95.42 = 181.74$

COMPUTED KTS DATE 9-10-85
CHECKED JRB DATE 9-15-85

T_{11} Horizontal 7'-4" $T = (7.33)(.41)(4.19) + 181.74$
$T = 194.33$

T_{12} Bend 90° $T = e^{(.41)(1.57)} \times 194.33 = 370.14$

T_{13} Vertical 3'-8" down $T = -(3.67)(4.19) + 370.14$
$T = 354.78$

T_{14} Bend 48° $T = e^{(.41)(.84)} \times 354.78 = 500.26$

T_{15} Straight run 2'-6" down 46° $T = (2.5)(4.19)(.41\cos 46° - \sin 46°) + 500.2$
$T = 495.70$

T_{16} Bend 46° $T = e^{(.41)(.84)} \times 495.70 = 698.97$

T_{17} Vertical 2'-2" down $T = -(2.17)(4.19) + 698.97$
$T = 689.88$

$SWP = \frac{1}{3}(3 \times 1.35 - 2)\left(\frac{698.97}{.955}\right) = 500.14$

Note total bends in conduit is 418°

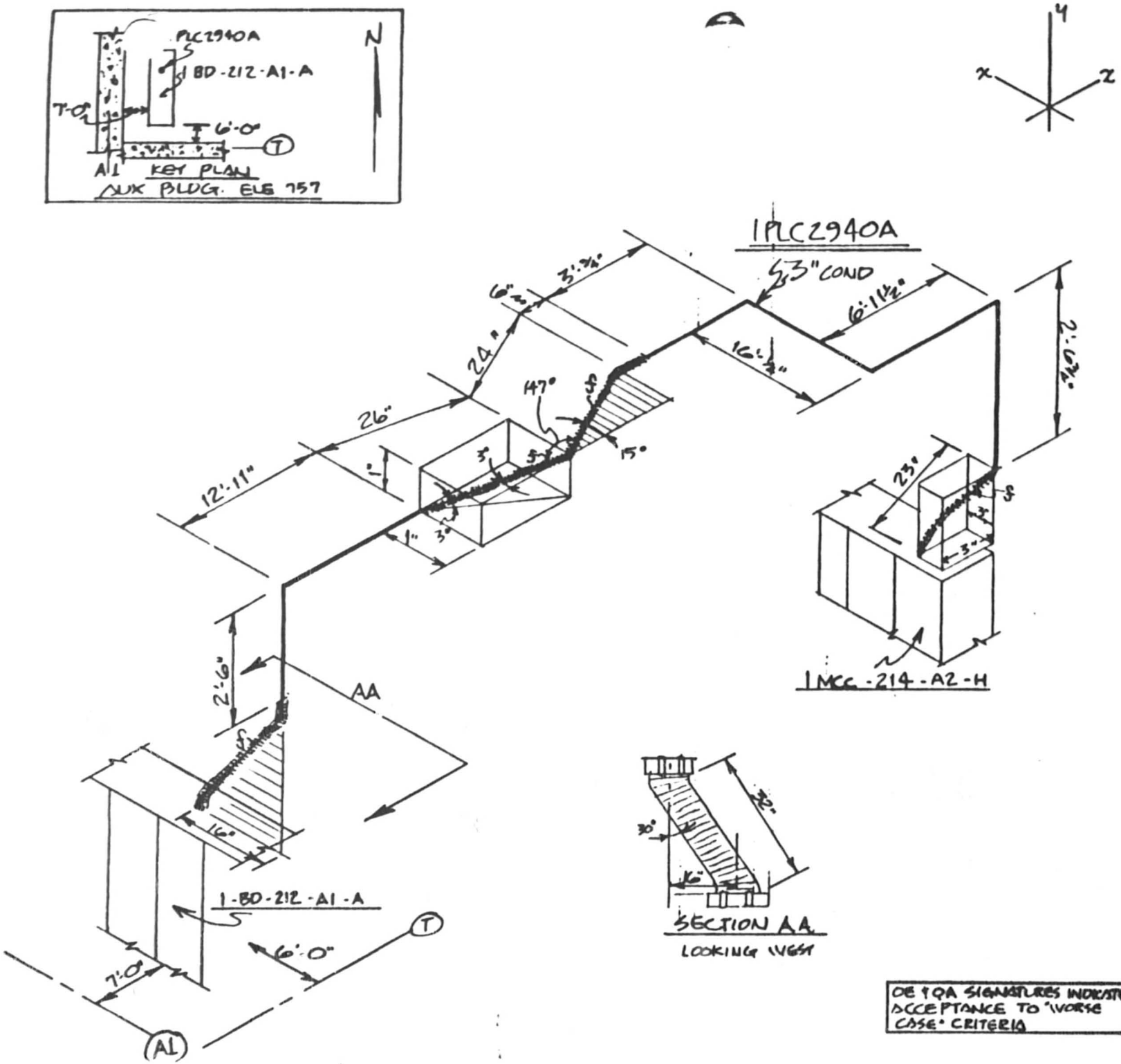

NOTES:

1. ALL BENDS HAVE A RADIUS OF 13" UNLESS OTHERWISE NOTED. (3"I) CONDUIT
2. TOLERANCES AS SPECIFIED BY EP-22.29
3. ALL BENDS NOT SPECIFIED ARE 90°
4.

CABLE UNID	MANU-FACTURER
1PL4962A	LATER

5. REF. DWG # 45W828-6,12 & 13
6. ALL DIMENSIONS CL TO CL

AUXILIARY BLDG. U-1

RACEWAY ISOMETRIC DWG. ELE. 757' COND. # 1PLC2940A

WATTS BAR NUCLEAR PLANT
TVA/OC

ENGINEER: [signature] DATE: 9/5/85

VERIFICATION: [signature]

APPROVED: [signature]

DRAWING NO: E1PLC2940A S.P. R.0

OE & QA SIGNATURES INDICATE ACCEPTANCE TO "WORSE CASE" CRITERIA

OE: [signature] QA: [signature] 4/9/85

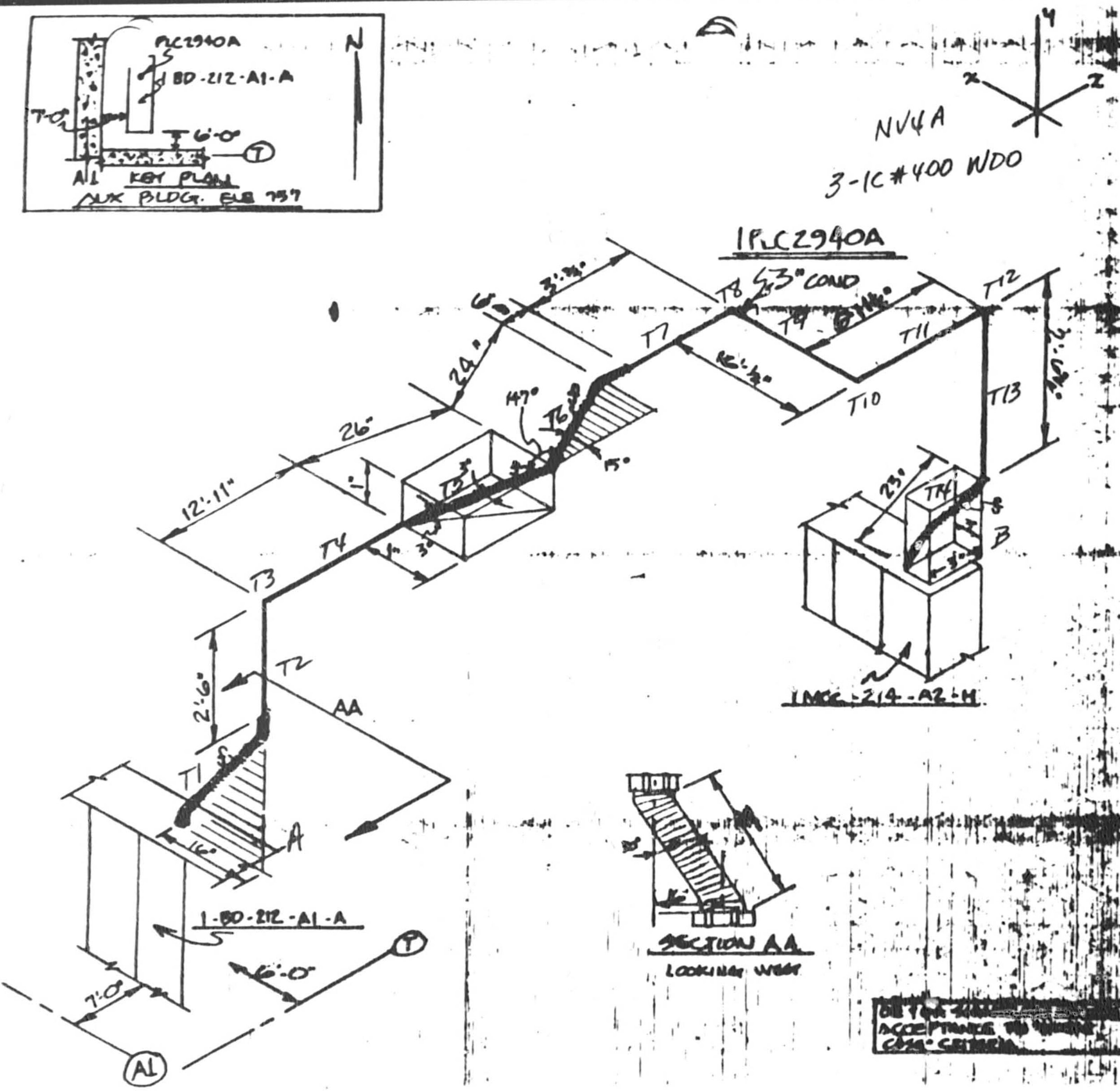

NOTES:

1. ALL BENDS HAVE A RADIUS OF 13" UNLESS OTHERWISE NOTED. (3⁄4) CONDUIT
2. TOLERANCES AS SPECIFIED BY EP-22.29
3. ALL BENDS NOT SPECIFIED ARE 90°
4.

CABLE UNID	MANUFACTURER
1PL4962A	LATER

5. REF. DWG # 45WB2B-G12.1B
6. ALL DIMENSIONS O.T.C.

AUXILIARY BLDG. U-1

RACEWAY ISOMETRIC

TVA 488 (EN DES 3-77)

CONDUIT 1PLC2940 NV4A

SHEET 1 OF 2

$D/d = 3.07/1.051 = 2.92$ $w_c = 1.36$

$w_c = 1.368 \times 3 = 4.19$ $K = .41$

COMPUTED KTS DATE 9-16-85

CHECKED JRB DATE 9-18-85

pull A → B

T_1 Flex 32" $T = (2.67)(4.19) = 11.18$
(assume straight vertical)

T_2 Vertical 2'-6" $T = 11.18 + (2.5)(4.19) = 21.67$

T_3 Bend 90° $T = 21.67\, e^{(1.57)(.41)} = 41.13$

T_4 Horizontal 12'-11" $T = 41.13 + (12.92)(4.19)(.41) = 63.23$

T_5 Flex 26" $T = 63.23 + (\frac{26}{12})(.41)(4.19) = 66.94$
(assume horizontal)

T_6 Flex 30" $T = 66.94 + (\frac{30}{12})(.41)(4.19) = 71.22$
(assume horizontal)

T_7 Horizontal 3'-0 7/8" $T = 71.22 + (3.06)(.41)(4.19) = 76.46$

T_8 Bend 90° $T = 76.46\, e^{(1.57)(.41)} = 145.13$

T_9 Horizontal 16'-1/4" $T = 145.13 + (16.02)(.41)(4.19) = 172.55$

T_{10} Bend 90° $T = 172.55\, e^{(1.57)(.41)} = 327.52$

T_{11} Horizontal 6'-11 1/2" $T = 327.52 + (6.96)(.41)(4.19) = 339.43$

T_{12} Bend 90° $T = 339.43\, e^{(1.57)(.41)} = 644.29$

T_{13} Vertical 2'-6 3/4" $T = 644.29 - (2.56)(.41)(4.19) = 633.54$

$SWP = \frac{1}{3}(3 \times 1.36 - 2)\left(\frac{644.29}{.955}\right) = 467.76$

TVA 48R (EN DES 3-77)

1PLC2940

COMPUTED KTS DATE 9-16-85

CHECKED JRB DATE 9-18-85

pull B → A

T_{14} Flex 23" (assume vertical) $T = \left(\frac{23}{12}\right)(4.19) = 8.04$

T_{13} Vertical 2'-6¾" $T = 8.04 + (2.58)(.41)(4.19) = 18.79$

T_{12} Bend 90° $T = 18.79\, e^{(1.57)(.41)} = 35.66$

T_{11} Horizontal 6'-11½" $T = 35.66 + (6.92)(.41)(4.19) = 47.57$

T_{10} Bend 90° $T = 47.57\, e^{(1.57)(.41)} = 90.29$

T_9 Horizontal 16'-¼" $T = 90.29 + (16.02)(.41)(4.19) = 117.71$

T_8 Bend 90° $T = 117.71\, e^{(1.57)(.41)} = 223.42$

T_7 Horizontal 3'-¾" $T = 223.42 + (3.06)(.41)(4.19) = 228.66$

T_6 flex 30" (assume horizontal) $T = 228.66 + \left(\frac{30}{12}\right)(.41)(4.19) = 232.94$

T_5 flex 26" (assume horizontal) $T = 232.94 + \left(\frac{26}{12}\right)(.41)(4.19) = 236.64$

T_4 Horizontal 12'-11" $T = 236.64 + (12.92)(.41)(4.19) = 258.75$

T_3 Bend 90° $T = 258.75\, e^{(1.57)(.41)} = 491.14$

T_2 Vertical 5'-2" $T = 491.14 - (5.17)(4.19) = 469.48$

$SWP = \frac{1}{3}(3 \times 1.36 - 2)\left(\frac{491.14}{.455}\right) = 356.57$

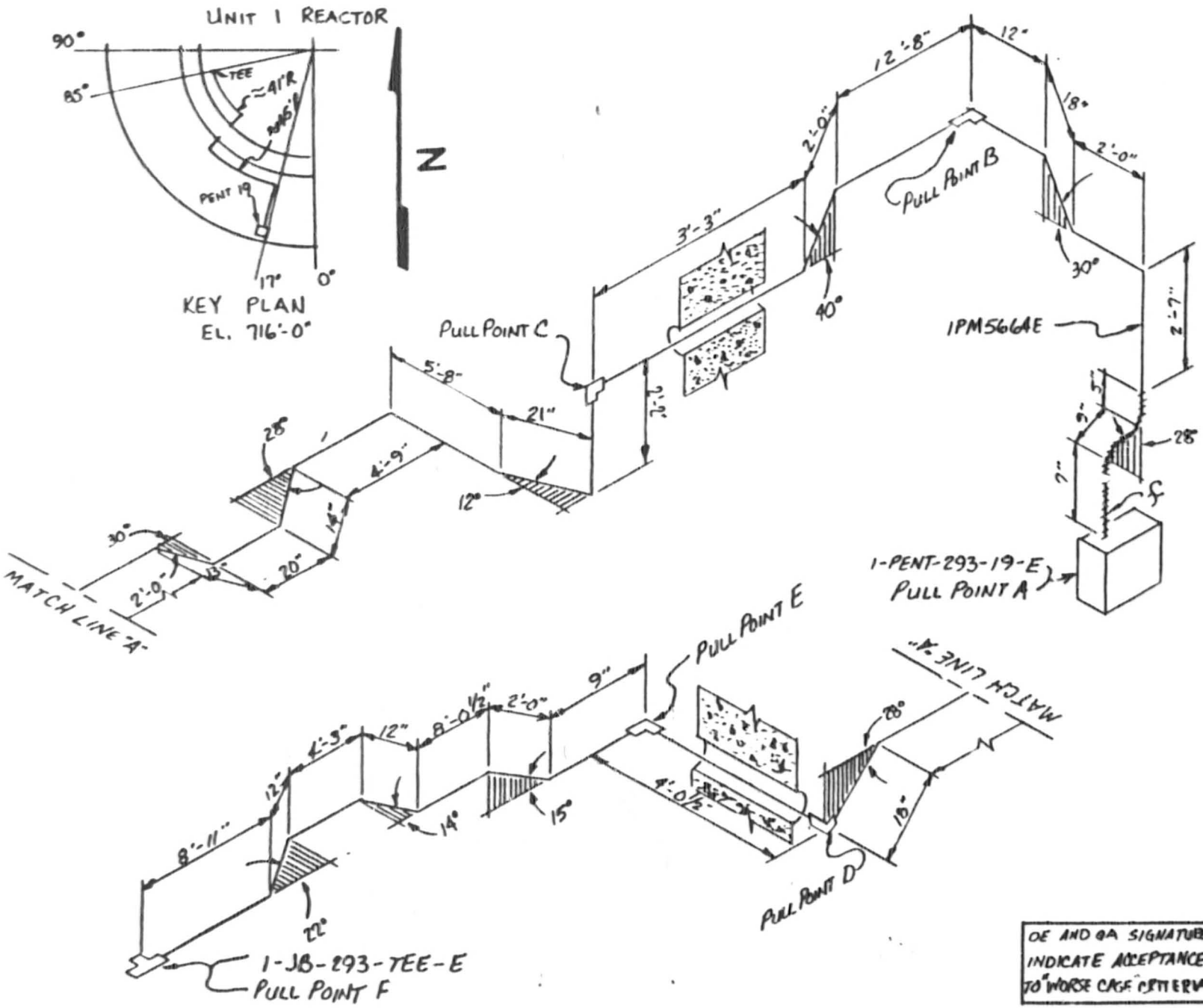

NOTES:

1. ALL BENDS HAVE A RADIUS OF 9.50" UNLESS OTHERWISE NOTED. (2I)
2. TOLERANCES AS SPECIFIED BY EP 22.29
3. ALL BENDS NOT SPECIFIED ARE 90°
4.

CABLE UNID	MANU-FACTURER
1PM5132E	LATER
1PM5138E	↓
1PM5140E	
1PM5142E	
1PM5144E	
1PM5348E	

5. REF. DWG # 45N862-4,12,10,6
6. ALL DIMENSIONS C. TO CL

REACTOR BLDG-UNIT 1

RACEWAY ISOMETRIC
DWG. ELE. 716 COND. # 1PM5664E

WATTS BAR NUCLEAR PLANT
TVA/OC

ENGINEER: Charles L. Chandler | DATE: 9-7-85

VERIFICATION: W.D. Perkins 9-7-85

APPROVED:

DRAWING NO: E1PM5664E S.P. | R.0

OE: | QA: A.W. Rogers 9/9/85

OE AND QA SIGNATURE INDICATE ACCEPTANCE TO "WORSE CASE" CRITERIA

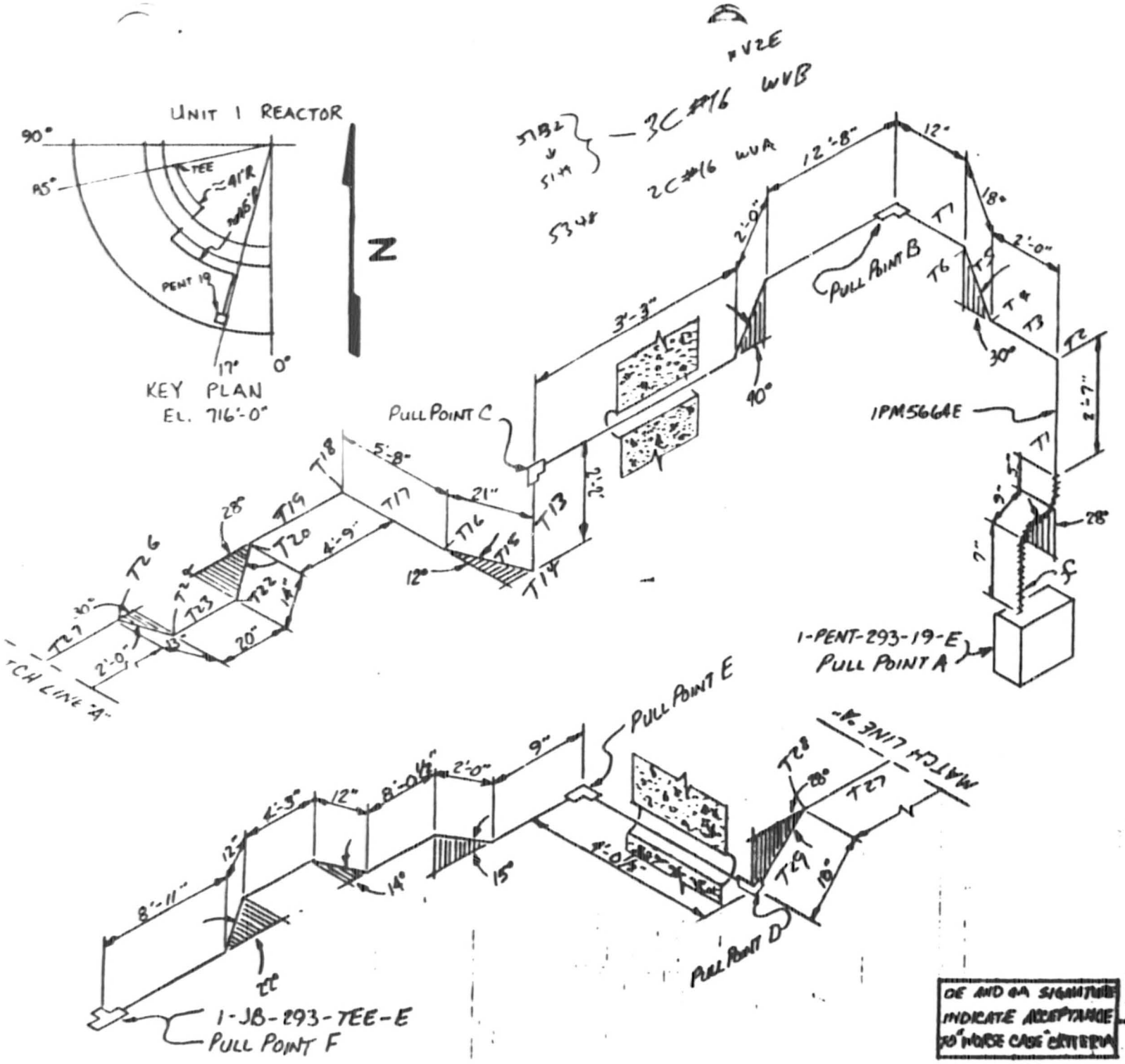

NOTES:

1. ALL BENDS HAVE A RADIUS OF 9.50" UNLESS OTHERWISE NOTED. (2I)
2. TOLERANCES AS SPECIFIED BY EP 22.29
3. ALL BENDS NOT SPECIFIED ARE 90°
4.

CABLE UNID	MANU-FACTURER
1PM5132E	LATER
1PM5138E	↓
1PM5140E	
1PM5142E	
1PM5144E	
1PM5348E	

5. REF. DWG. # 45N862-4,12,10,6
6. ALL DIMENSIONS a.s.a.

REACTOR BLDG-UNIT 1

RACEWAY ISOMETRIC
DWG. ELE. 716 COND. # 1PM5664E

WATTS BAR NUCLEAR PLANT
TVA/DC

Charles L. Cohen Jr. 9-7-85

W.D. Perkins 9-7-85

NA
EEB-EP 22.29
SAMPLE PROGRAM

G.W. Rogers

OE AND QA SIGNATURE INDICATE ACCEPTANCE TO "WORSE CASE" CRITERIA

1PM5664E

TVA 488 (EN DES 3-77)

CONDUIT 1PM5664E NV2E

$D/d = 2.07/.388 = 5.34$ $W_c = 1.18$ $\mu = .35$

$W_c = 6 \times .089 = .53$

COMPUTED KTS DATE 9-16-85

CHECKED JRB DATE 9-18-85

pull A → B

T_1 Vertical 4'-4" $T = (4.33)(.53) = 2.29$

T_2 Bend 90° $T = 2.29\, e^{(1.57)(.35)} = 3.98$

T_3 Horizontal 2'-0" $T = 3.98 + (2)(.35)(.53) = 4.35$

T_4 Bend 30° $T = 4.35\, e^{(.35)(.52)} = 5.22$

T_5 Straight run 18" slope up 30° $T = 5.22 + \left(\frac{18}{12}\right)(.53)(.35 \cos 30° + \sin 30°)$ $T = 5.86$

T_6 Bend 30° $T = 5.86\, e^{(.35)(.52)} = 7.04$

T_7 Horizontal 12" $T = 7.04 + (1)(.53)(.35) = 7.22$

$SWP = \frac{7.04}{.705} \times .64 = 6.39$

pull D → C

T_{24} Straight run 18" slope up 28° $T = (1.5)(.53)(.35 \cos 28° + \sin 28°)$ $T = .62$

T_{25} Bend 28° $T = .62\, e^{(.35)(.49)} = .73$

T_{22} Horizontal 2'-0" $T = .73 + (2)(.53)(.35)$ $T = 1.11$

T_{21} Bend 30° $T = 1.11\, e^{(.35)(.52)} = 1.33$

T_{20} Horizontal 13" $T = 1.33 + \left(\frac{13}{12}\right)(.53)(.35) = 1.53$

T_{19} Bend 30° $T = 1.53\, e^{(.35)(.52)} = 1.84$

T_{23} Horizontal 20" $T = 1.84 + \left(\frac{20}{12}\right)(.53)(.35) = 2.14$

TVA 488 (EN DES 3-77)

1PM5664E

COMPUTED KTS DATE 9-16-85
CHECKED JRB DATE 9-18-85

T_{22} Bend 28° $T = 2.14 \cdot e^{(.35)(.49)} = 2.54$

T_{21} Horizontal 14" $T = 2.54 + (\frac{14}{12})(.53)(.35) = 2.76$

T_{20} Bend 28° $T = 2.76\ e^{(.35)(.49)} = 3.28$

T_{19} Horizontal 4'-9" $T = 3.28 + (4.75)(.35)(.53) = 4.16$

T_{18} Bend 90° $T = 4.16\ e^{(.35)(1.57)} = 7.20$

T_{17} Horizontal 5'-8" $T = 7.20 + (5.67)(.35)(.53) = 8.26$

T_{16} Bend 12° $T = 8.26\ e^{(.35)(.21)} = 8.88$

T_{15} Horizontal 21" $T = 8.88 + (\frac{21}{12})(.35)(.53) = 9.21$

T_{14} Bend 90° $T = 9.21\ e^{(.35)(1.57)} = 15.96$

T_{13} Vertical 2'-2" $T = 15.96 + (2.17)(.35)(.53) = 17.11$

SWP: $\frac{15.96}{.705} \times .64 = 14.49$

Total Beads = 336.00

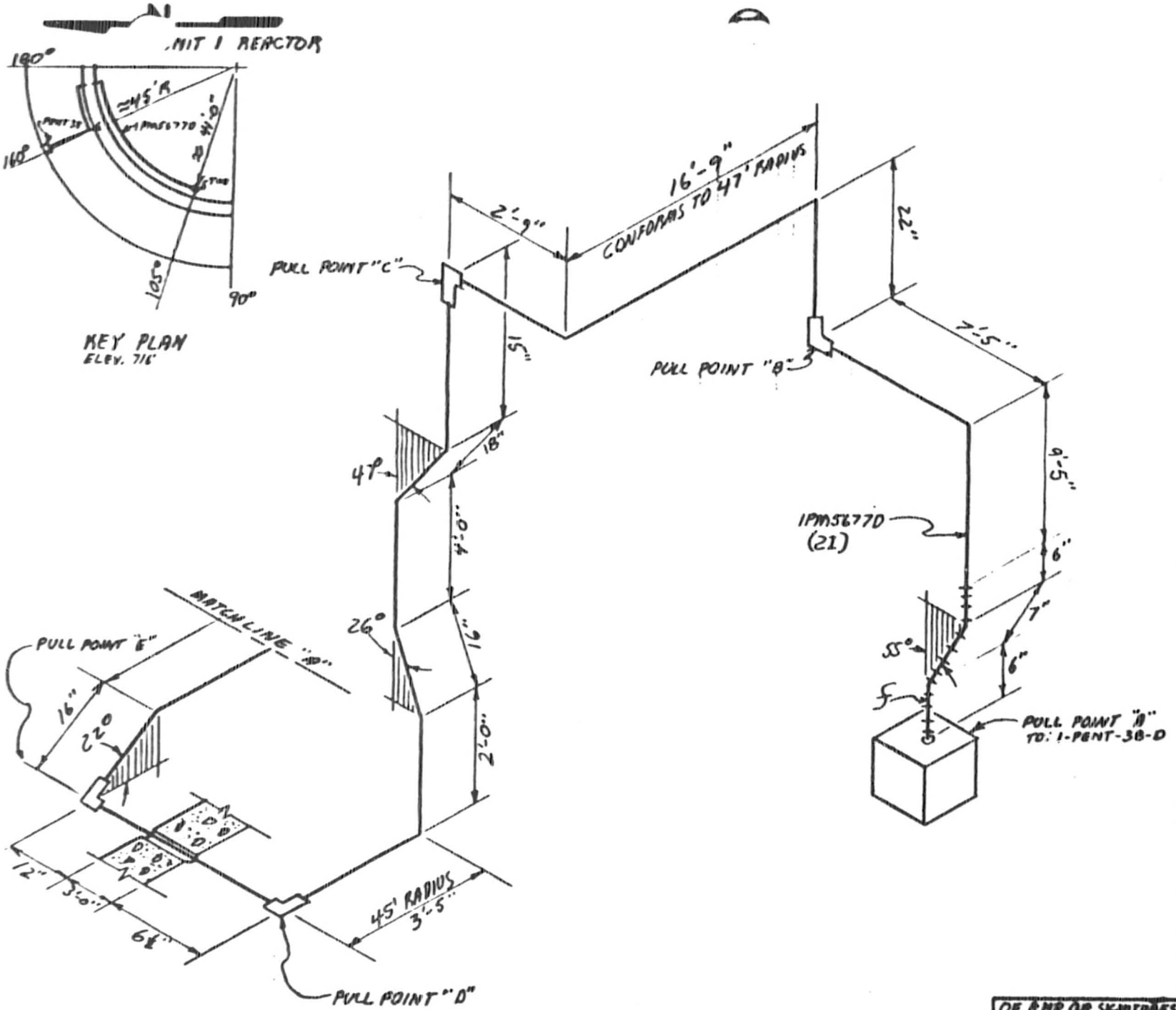

NOTES:

1. ALL BENDS HAVE A RADIUS OF 9.5" UNLESS OTHERWISE NOTED. (2I)

2. TOLERANCES AS SPECIFIED BY EP22.29

3. ALL BENDS NOT SPECIFIED ARE 90°

4.

CABLE UNID	MANU-FACTURER
1PM5155D 1PM5161D 1PM5163D 1PM5165D 1PM5167D	LATER

5. REF. DWG. #45N862-4, 45N862-11, 45N862-8

6. ALL DIMENSIONS CL TO CL

REACTOR BLDG.-UNIT 1

RACEWAY ISOMETRIC
DWG. ELE. 716' COND. #1PM5677D

WATTS BAR NUCLEAR PLANT
TVA/OC

ENGINEER: W.D. [signature] DATE: 9-7-85

VERIFICATION: J.W. [signature]

APPROVED: [signature]

DRAWING NO.: E1PM5677D S.P R.0

OE AND QA SIGNATURES SIGNIFY ACCEPTANCE TO "WORSE CASE" CRITERIA

OE: [signature] QA: A.W. [signature] 9/9/85

SHEET 1 OF 2

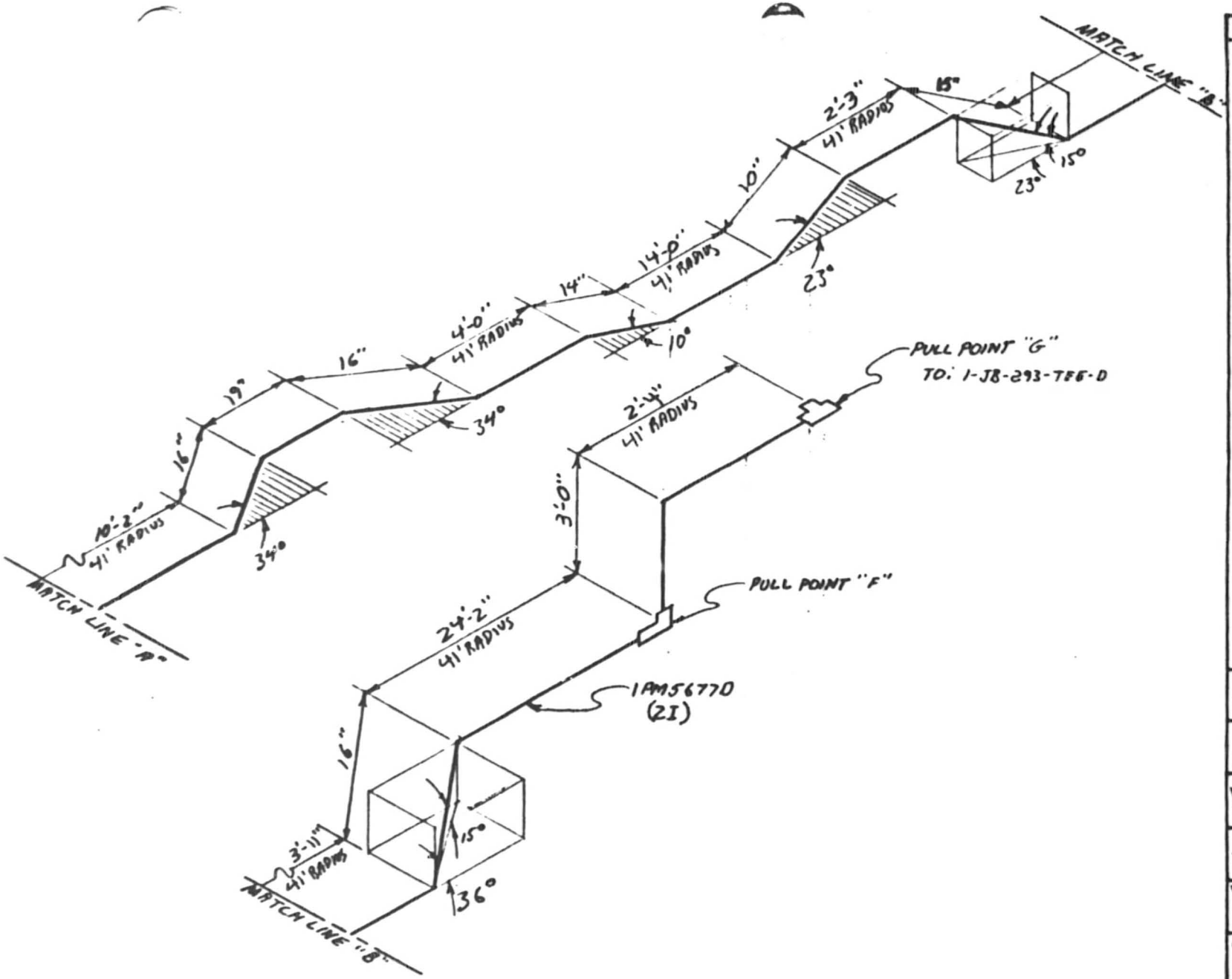

NOTES:

1. ALL BENDS HAVE A RADIUS OF 9.5" UNLESS OTHERWISE NOTED. (2I)

2. TOLERANCES AS SPECIFIED BY EP22.29

3. ALL BENDS NOT SPECIFIED ARE 90°

4.

CABLE UNID	MANU-FACTURER
SHEET 1	

5. REF. DWG @ SHEET 1

6. ALL DIMENSIONS ℄ TO ℄

REACTOR BLDG. - UNIT 1

RACEWAY ISOMETRIC
DWG. ELE. 716' COND. #1PM5677D

WATTS BAR NUCLEAR PLANT
TVA/OC

ENGINEER: W.D. Pe[illegible] DATE: 9-7-85

VERIFICATION: J.W. [illegible]

APPROVED: [illegible]

DRAWING NO: E1PM5677D S.P. R.0

OE AND QA SIGNATURES SIGNIFY ACCEPTANCE TO "WORSE CASE" CRITERIA

OE: [illegible] QA: 9/9/85 [illegible]

SHEET 2 OF 2

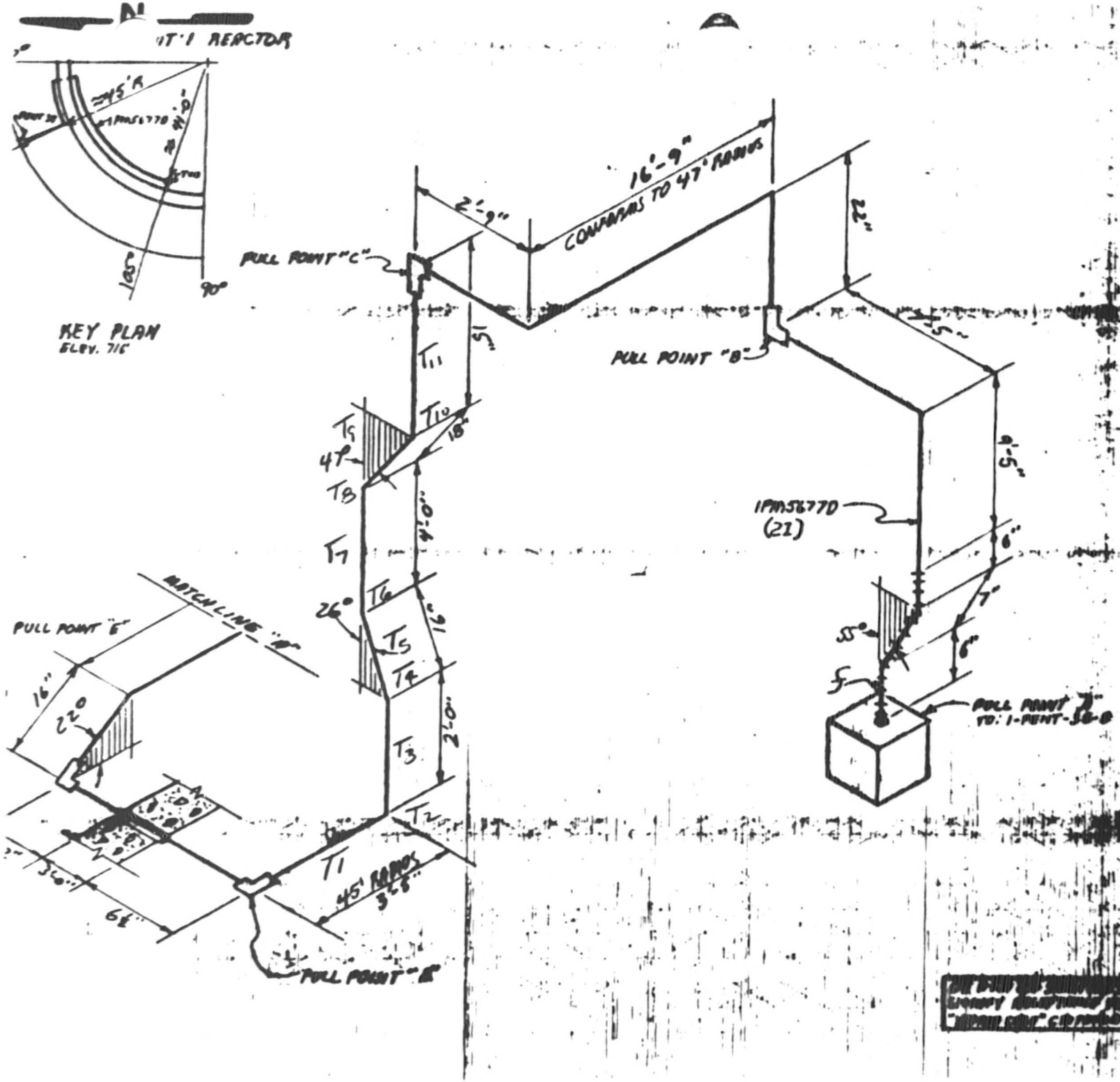

NOTES:

1. ALL BENDS HAVE A RADIUS OF 9.5" UNLESS OTHERWISE NOTED. (2I)

2. TOLERANCES AS SPECIFIED BY EP22.29

3. ALL BENDS NOT SPECIFIED ARE 90°

4.

CHECK UNIT	MANUFACTURER
1PM5755D 1PM5761D 1PM5763D 1PM5765D 1PM5767D	LATER

5. [illegible]

6. ALL DIMENSIONS [illegible]

REACTOR BLDG.-UNIT 1

[illegible]

SHEET 1 OF 2

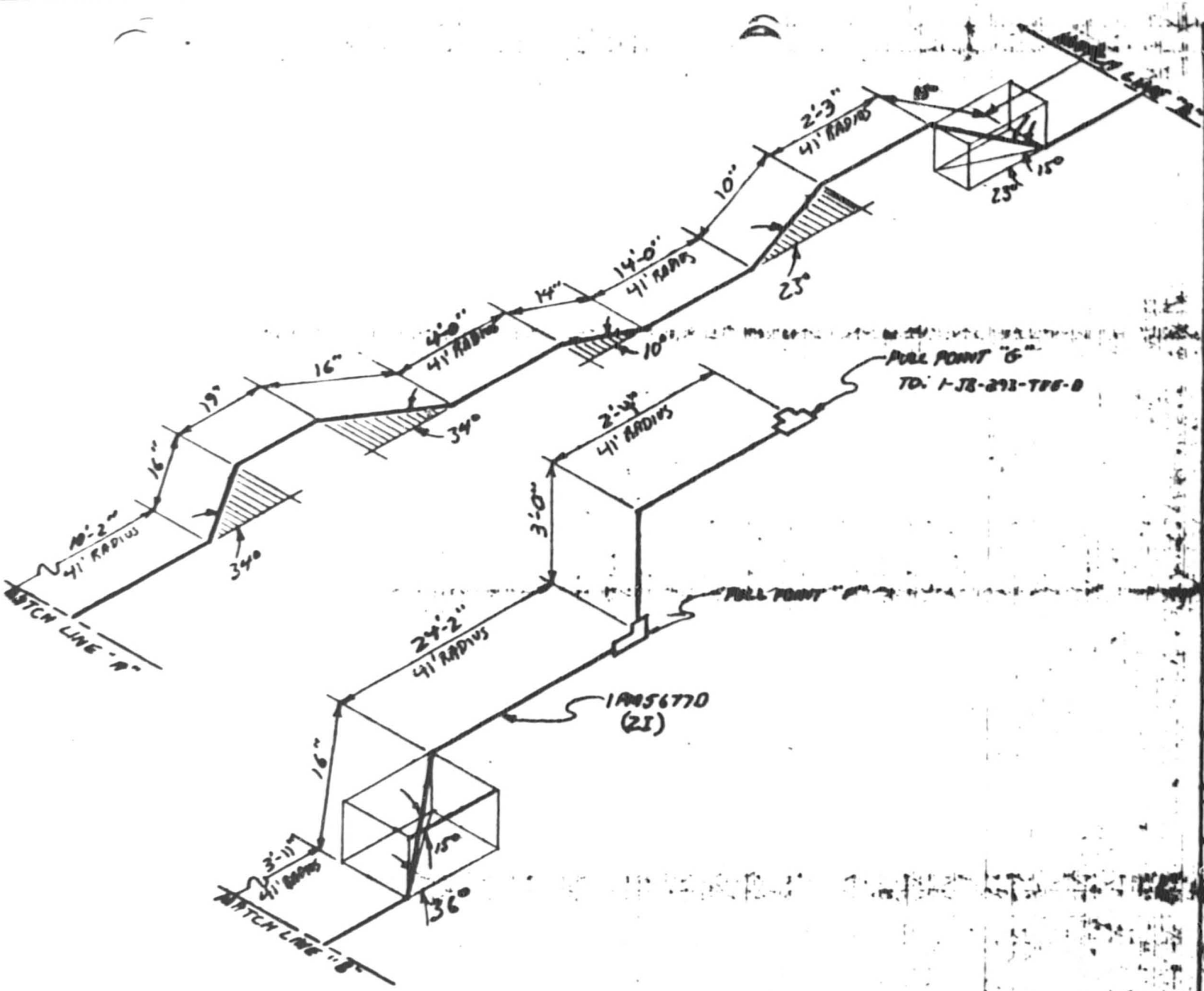

NOTES:

1. ALL BENDS HAVE A RADIUS OF 9.5" UNLESS OTHERWISE NOTED. (2I)

2. TOLERANCES AS SPECIFIED BY EP22.29

3. ALL BENDS NOT SPECIFIED ARE 90°

4.

CABLE UNID	MANUFACTURER
SHEET 1	

5. [illegible]

6. ALL DIMENSIONS [illegible]

REACTOR BLDG. - UNIT 1

RACEWAY [illegible]

[illegible]

TWIN [illegible]

[illegible] 9-7-85

[illegible]

[illegible]

[illegible]

[illegible]

[illegible]

[illegible]

CONDUIT 1PM5677D [2I] From pull point D to C
CABLES (see below)
V2

COMPUTED RMS DATE 9/14/85
CHECKED JRB DATE 9-18-85

1PM 5155 D	1-3/C	#16	WVB	.089 lb/ft
5161 D	1-3/C	#16	WVB	"
5163 D	1-3/C	#16	WVB	"
5165 D	1-3/C	#16	WVB	"
5167 D	1-3/C	#16	WVB	"

$W_t = (5)(.089) = 0.45$

$W_c = 1.4$

$\underline{K} = KW_c = (0.3)(1.4) = 0.42$

SEGMENT	TYPE	ALGORITHM		TENSION
T_1	Straight	$T_1 = LW_t K + \cancel{T_{in}}^{0}$		
		$= (3.42)(0.45)(0.4)$	=	0.65 lb.
T_2	Vert bend (90°)	$T_2 = T_1 e^{\underline{K}b}$		
		$= 0.65e^{(0.42)(1.57)}$	=	1.25
T_3	Up slope (90°)	$T_3 = LW_t + T_2$		
		$= (2)(0.45) + 1.25$	=	2.15
T_4	Vert bend (26°)	$T_4 = T_3 e^{\underline{K}b}$		
		$= 2.15e^{(0.42)(0.45)}$	=	2.60
T_5	Up slope (64°)	$T_5 = LW_t(\underline{K}\cos\alpha + \sin\alpha) + T_4$		
		$= \left(\frac{16}{12}\right)(0.45)(0.42\cos 64° + \sin 64°) + 2.60 = 3.25$		

TVA 11030 (WM-7-75)

COMPUTED FMS DATE 9/14/85
CHECKED JRB DATE 9-18-85

SEGMENT	TYPE	ALGORITHM	TENSION
T_6	Vert bend (26°)	$T_6 = T_5 e^{\mu b}$	
		$= 3.25 e^{(0.42)(0.45)}$	$= 3.93$
T_7	Up slope (90°)	$T_7 = LW_c + T_6$	
		$= (4)(0.45) + 3.93$	$= 5.73$
T_8	Vert bend (47°)	$T_8 = T_7 e^{\mu b}$	
		$= 5.73 e^{(0.42)(.82)}$	$= 8.08$
T_9	Up slope (43°)	$T_9 = LW_c(K\cos\alpha + \sin\alpha) + T_8$	
		$= (1.5)(0.45)(0.42\cos 43° + \sin 43°) + 8.08$	$= 8.75$
T_{10}	Vert bend (47°)	$T_{10} = T_9 e^{\mu b}$	
		$= 8.75 e^{(0.42)(0.82)}$	$= 12.35$
T_{11}	Up slope (90°)	$T_{11} = LW_c + T_{10}$	
		$= \left(\frac{1.5}{12}\right)(0.45) + 12.35$	$= 12.91$

$SWP = x\left[\frac{T}{R}\right]$ @ T_{10} $R = 9.5''$

$= 0.70\left[\frac{12.35}{.705}\right]$

$= \underline{\underline{12.26 \frac{lb}{ft}}}$

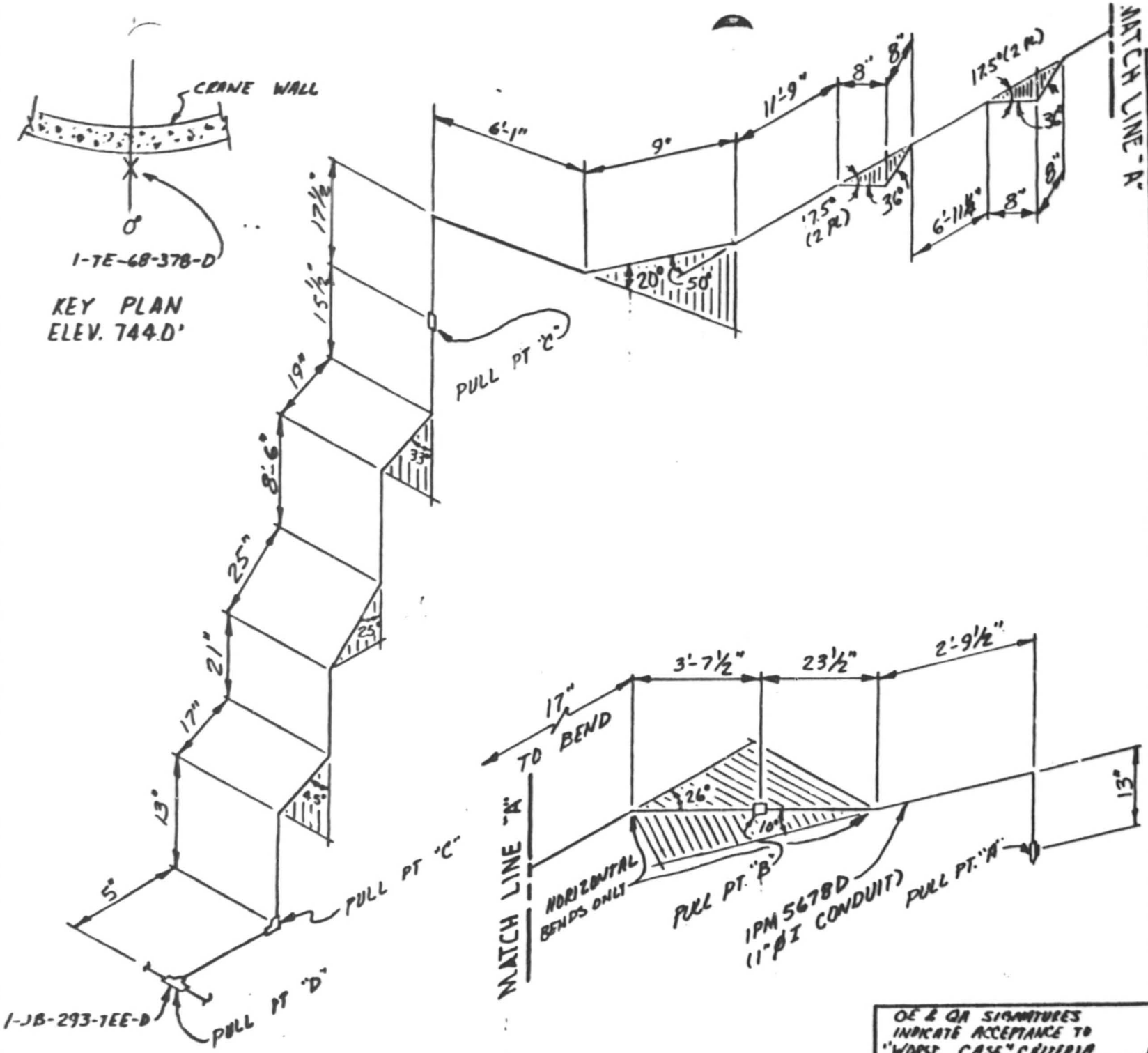

NOTES:

1. ALL BENDS HAVE A RADIUS OF 5¾" UNLESS OTHERWISE NOTED. (1"Ø I CONDUIT)
2. TOLERANCES AS SPECIFIED BY EP 22.29
3. ALL BENDS NOT SPECIFIED ARE 90°
4.

CABLE UNID	MANU-FACTURER
1PM5165D	45N864-2

5. REF. DWG # 45N864-2
6. ALL DIMENSIONS ℄ TO ℄

REACTOR BLDG UNIT 1

RACEWAY ISOMETRIC
DWG. ELE. 744.0' COND. # 1PM5678D

WATTS BAR NUCLEAR PLANT
TVA/OC

ENGINEER: Roger A. Brown DATE: 9-7-85

VERIFICATION: J.W. Nal

APPROVED: [signature]

DRAWING NO: E1PM5678D S.P. R.0

OE & QA SIGNATURES INDICATE ACCEPTANCE TO "WORST CASE" CRITERIA

OE: [signature] QA: A. W. Bryan 9/9/85

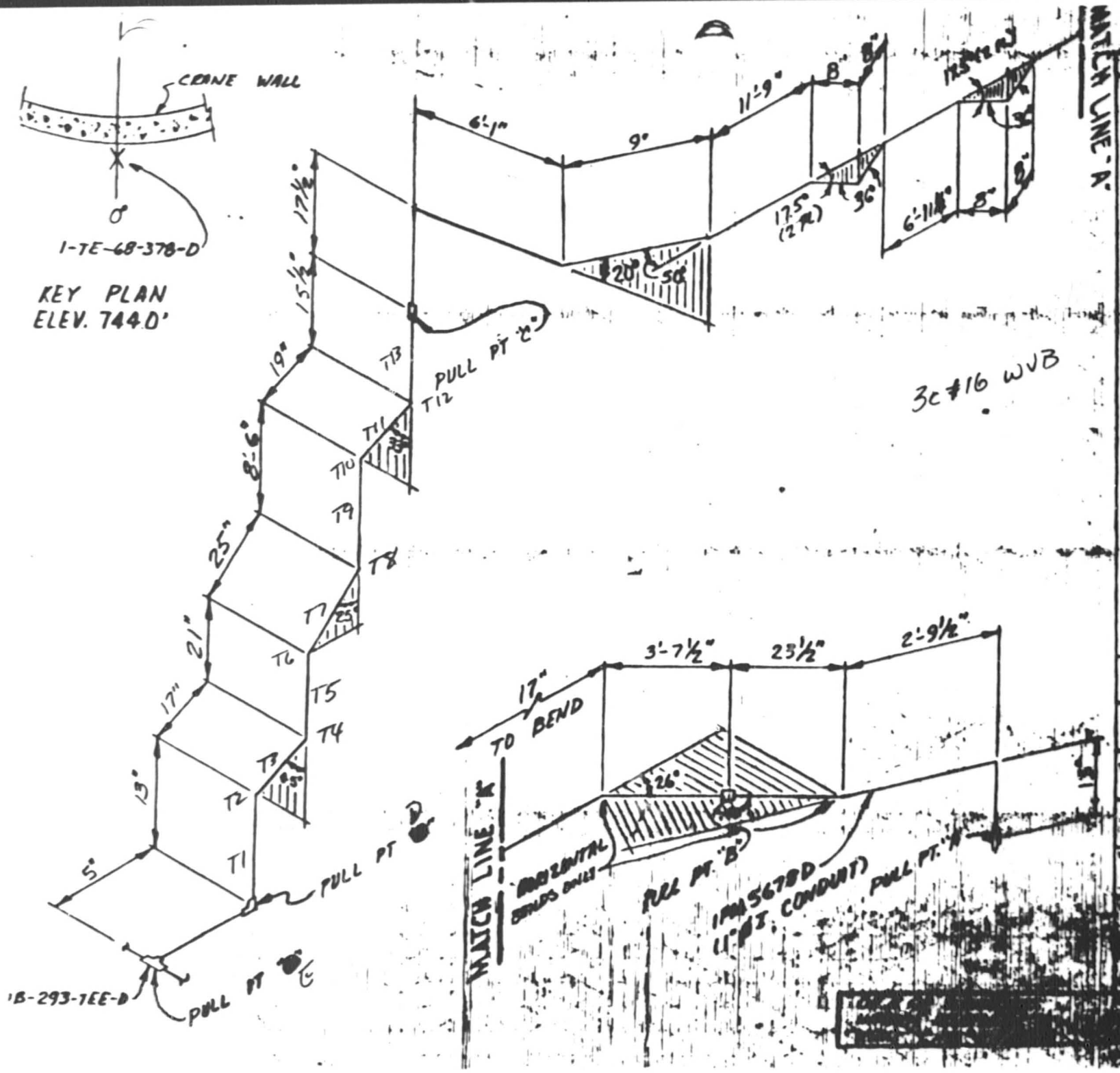

NOTES:

1. ALL BENDS HAVE A RADIUS OF 5¾" UNLESS OTHERWISE NOTED. (1" Ø I CONDUIT)
2. TOLERANCES AS SPECIFIED BY EP 22.29
3. ALL BENDS NOT SPECIFIED ARE 90°
4.

CABLE UNID	MANU-FACTURER
1PM5165D	4SN864-2

5. REF. DWG. # 4SN864-2
6. ALL DIMENSIONS C to C

REACTOR BLDG UNIT 1

RACEWAY ISOMETRIC

NOTES BAR NUCLEAR PLANT

TVA/OC

CONDUIT 1PM5678D NV2D

SHEET 1 OF 1

$w = .089$ $K = 0.3$

COMPUTED KTS DATE 9-11-85

CHECKED JRB DATE 9-15-85

pull D → C

T_1 Vertical 13" $T = \frac{13}{12} \times .089 = .10$

T_2 Bend 45° $T = .10 e^{(.3)(.79)} = .12$

T_3 Straight run 17" up 45° $T = .12 + \left(\frac{17}{12}\right)(.089)(.3\cos 45° + \sin 45°)$
$T = .24$

T_4 Bend 45° $T = .24 e^{(.3)(.79)} = .30$

T_5 Vertical 21" $T = .30 + \left(\frac{21}{12}\right)(.089) = .46$

T_6 Bend 25° $T = .46 e^{(.3)(.44)} = .52$

T_7 Straight run 25" up 65° $T = .52 + \left(\frac{25}{12}\right)(.089)(.3\cos 65° + \sin 65°)$
$T = .71$

T_8 Bend 25° $T = .71 e^{(.3)(.44)} = .81$

T_9 Vertical 8'-6" $T = .81 + (8.5)(.089) = 1.57$

T_{10} Bend 33° $T = 1.57 e^{(.3)(.58)} = 1.86$

T_{11} Straight run 19" up 57° $T = 1.86 + \left(\frac{19}{12}\right)(.089)(.3\cos 57° + \sin 57°)$
$T = 2.01$

T_{12} Bend 33° $T = 2.01 e^{(.3)(.58)} = 2.38$

T_{13} Vertical $15\frac{1}{2}$" $T = 2.38 + (1.29)(.089) = 2.50$

$SWP = \frac{2.38}{.435} = 5.47$

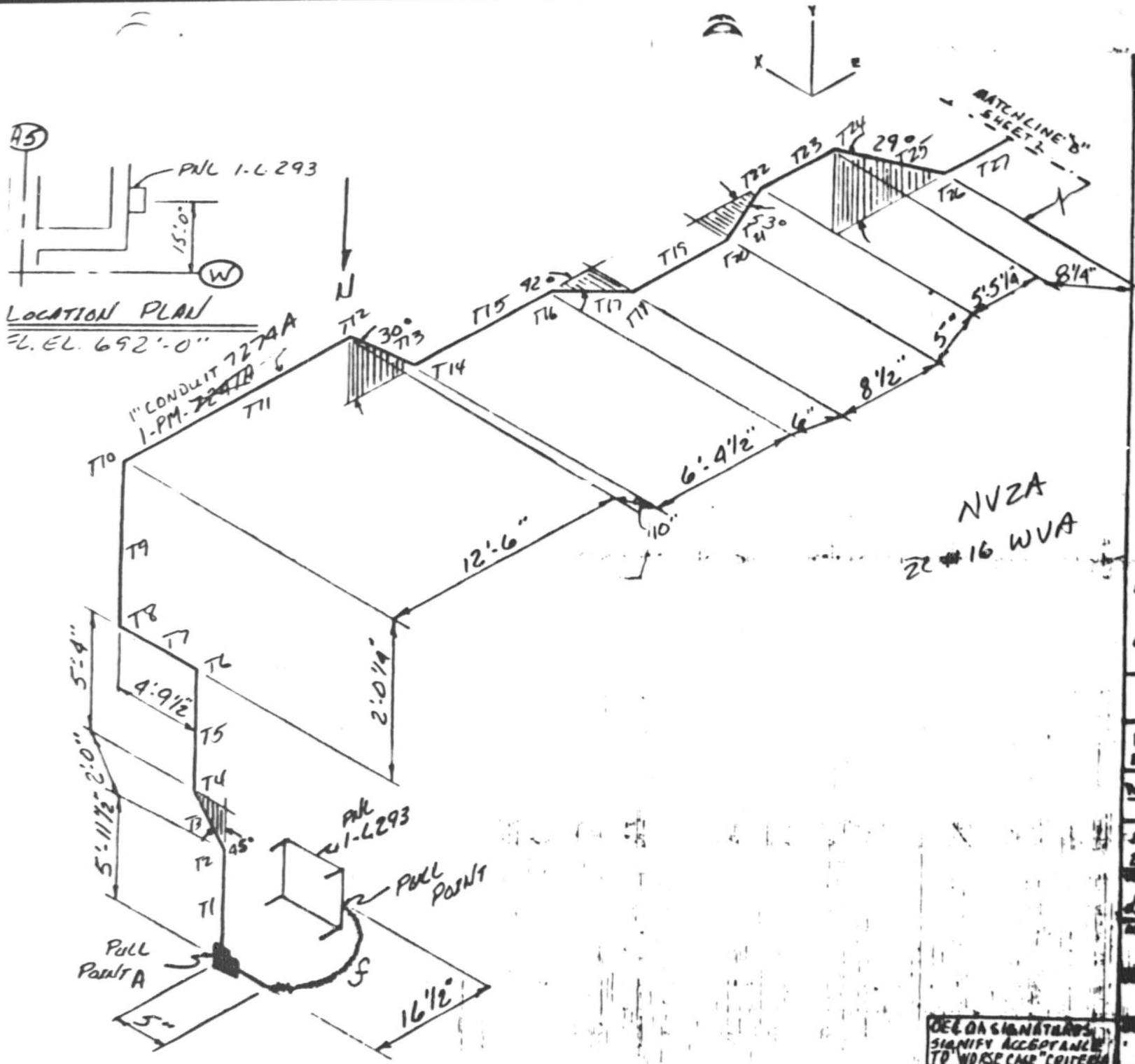

NOTES:

1. ALL BENDS HAVE A RADIUS OF 5¾" UNLESS OTHERWISE NOTED. (1" I) CONDUIT
2. TOLERANCES AS SPECIFIED BY EP-22.29
3. ALL BENDS NOT SPECIFIED ARE 90°
4. CABLE UNID: 1PM5810A — MANUFACTURER: LATER
5. REF. DWG. #4SNB24-9
6. ALL DIMENSIONS A.B.C.

AUXILIARY BUILDING UNIT 1

RACEWAY ISOMETRIC DWG. EL. 692' COND. #1PM7274A

WATTS BAR NUCLEAR PLANT TVA/OC

Doug Mitchell, Brenda Trainer — $3.85

Lawrence D. Jackson

SAMPLE PROGRAM

OEL QA SIGNATURES SIGNIFY ACCEPTANCE TO "WORSE CASE" CRITERIA

SHEET 2

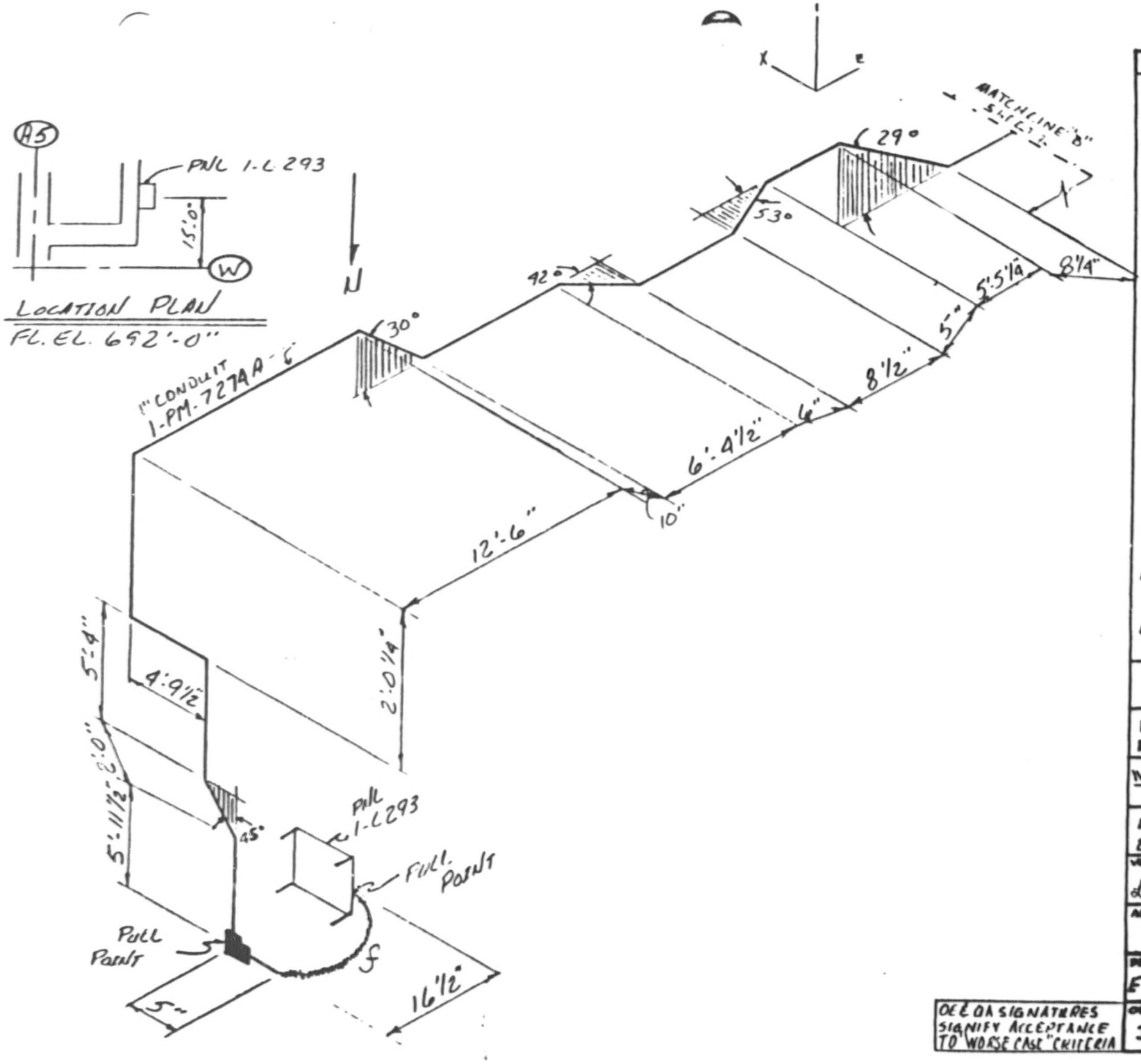

NOTES:

1. ALL BENDS HAVE A RADIUS OF 5 3/4" UNLESS OTHERWISE NOTED. (1" I) CONDUIT
2. TOLERANCES AS SPECIFIED BY EP-22.29
3. ALL BENDS NOT SPECIFIED ARE 90°
4.

CABLE UNID	MANU-FACTURER
1PM3810A	LATER

5. REF. DWG #4SN824-9
6. ALL DIMENSIONS CL TO CL

AUXILIARY BUILDING UNIT 1

RACEWAY ISOMETRIC DWG. ELE. 692' COND. #1PM7274A

WATTS BAR NUCLEAR PLANT TVA/OC

ENGINEER: DOUG McNEIL BRENDA TINKER

DATE: 9-3-85

VERIFICATION: Lawrence D. Jackson

APPROVED: [signature]

DRAWING NO: E1PM7274A S.P. R.0

OE & QA SIGNATURES SIGNIFY ACCEPTANCE TO "WORSE CASE" CRITERIA

OE: JIM M. MANN JAE

QA: T.W. Rogers

SHEET 2 OF 6

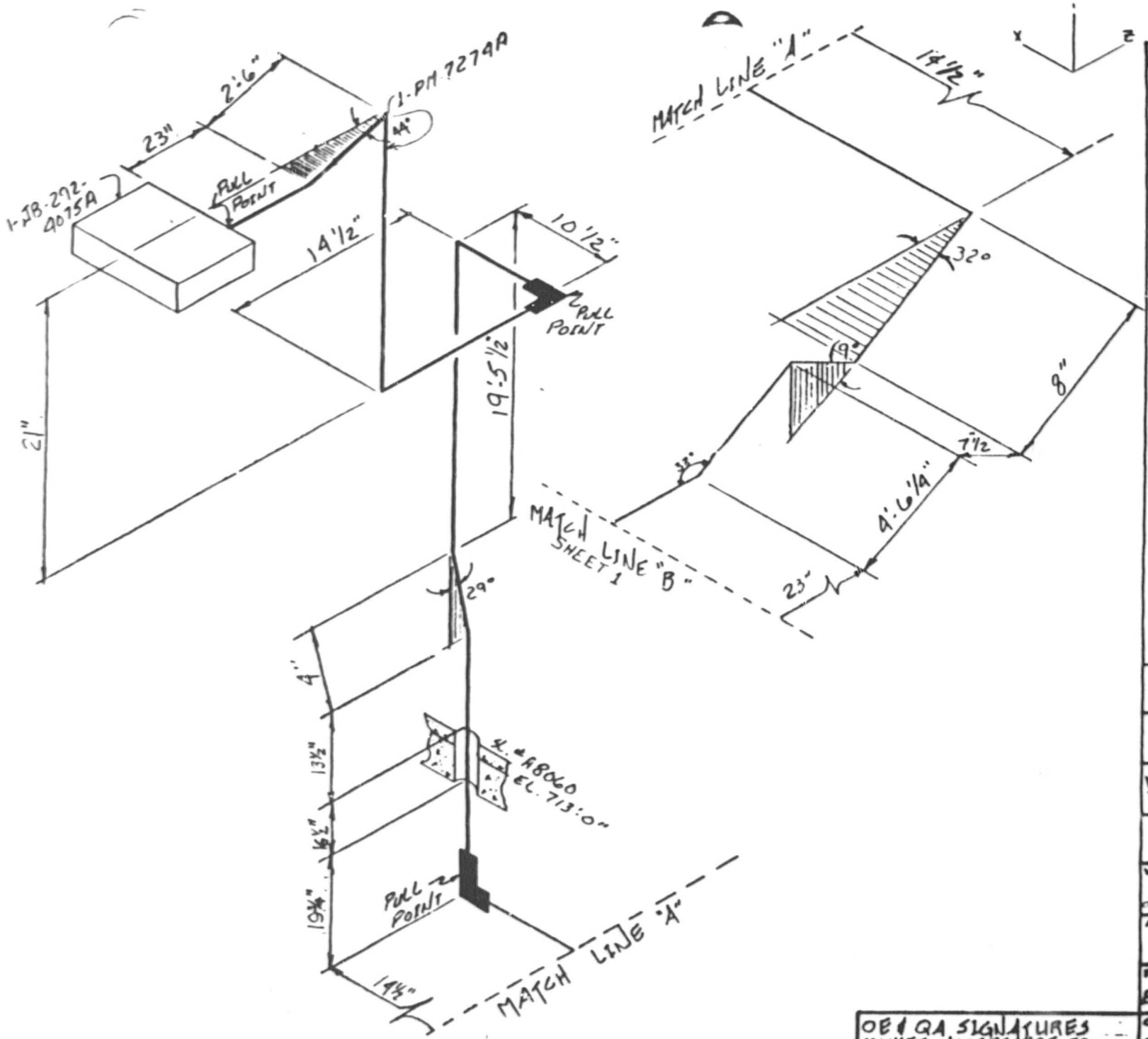

NOTES:

1. ALL BENDS HAVE A RADIUS OF 5 3/4" UNLESS OTHERWISE NOTED. (1" I) CONDUIT
2. TOLERANCES AS SPECIFIED BY EP22.29
3. ALL BENDS NOT SPECIFIED ARE 90°
4.

CABLE UNID	MANU-FACTURER
1PM 3810A	LATER

5. REF. DWG #4SN824-9
6. ALL DIMENSIONS CL TO CL

AUXILIARY BUILDING UNIT-1

RACEWAY ISOMETRIC DWG. ELE. 692' COND. # 1PM 7274A

WATTS BAR NUCLEAR PLANT TVA/OC

ENGINEER: Doug McNeil, Brenda Tinker — DATE: 8-30-85

VERIFICATION: Lawrence D. Jackson

APPROVED: [signature]

DRAWING NO: E1PMT274A S.P. — R.0

OE & QA SIGNATURES SIGNIFY ACCEPTANCE TO "WORSE CASE" CRITERIA

OE: JM M. Mann / JAP — QA: A. W. Bogan

SHEET 2 OF 2

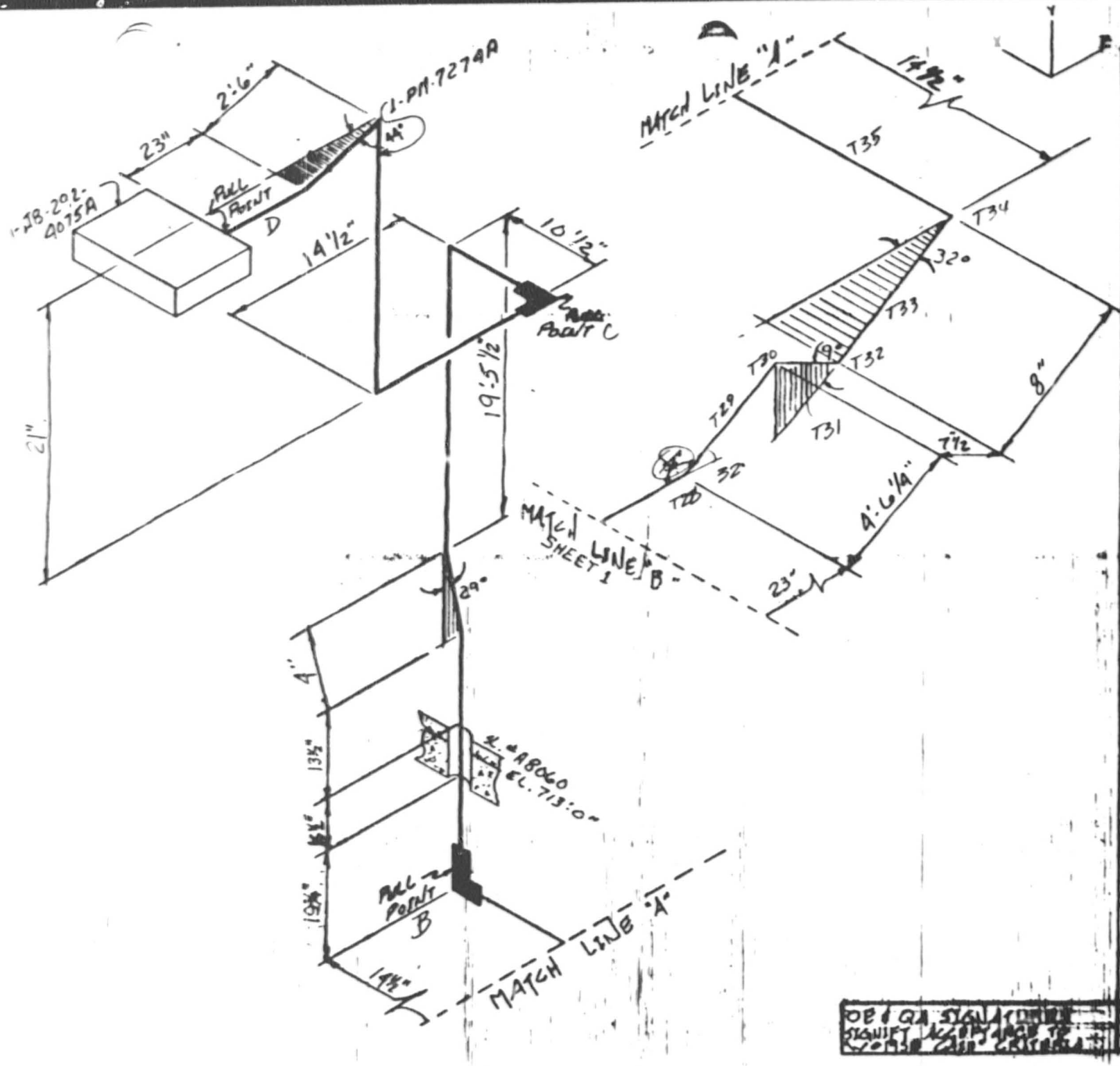

NOTES:

1. ALL BENDS HAVE A RADIUS OF 5 3/4" UNLESS OTHERWISE NOTED. (1" I) CONDUIT

2. TOLERANCES AS SPECIFIED BY EP22.28

3. ALL BENDS NOT SPECIFIED ARE 90°

4.

CABLE UNID	MANU-FACTURER
1PM3810A	LATER

5. REF. DWG. # 45N824-D

6. ALL DIMENSIONS C.B.C.

AUXILIARY BUILDING UNIT-1

RACEWAY ISOMETRIC DWG. ELE. 602' COND. # 1PM 7274A

WATTS BAR NUCLEAR PLANT TVA/OC

DESIGNED: DOUG McNEAL, BRENDA TINKER — DATE: 8-30-85

VERIFICATION: Lawrence O. Jackson

APPROVED: [signature]

DRAWING NO. NA EXB. EP-22.28

SAMPLE PROGRAM

OE & QA SIGNATURES SIGNIFY ACCEPTANCE TO [illegible] CRITERIA

[signature]

TVA 488 (EN DES 3-77)

CONDUIT 1PM7274A NV2A

SHEET 1 OF 6

$K = .3$ $W_t = .075$

COMPUTED KTS DATE 9-16-85

CHECKED JRB DATE 9-18-85

pull A → B

T_1	Vertical 5'-11½"	$T = (5.96)(.075) = .45$
T_2	Bend 45°	$T = .45\, e^{(.74)(.3)} = .57$
T_3	Straight run 2'-0" slope up 45°	$T = .57 + (2)(.075)(.3\cos 45° + \sin 45°)$ $T = .70$
T_4	Bend 45°	$T = .70\, e^{(.74)(.3)} = .89$
T_5	Vertical 5'-4"	$T = .89 + (5.33)(.075) = 1.29$
T_6	Bend 90°	$T = 1.29\, e^{(1.57)(.3)} = 2.07$
T_7	Horizontal 4'-9½"	$T = 2.07 + (4.79)(.3)(.075) = 2.18$
T_8	Bend 90°	$T = 2.18\, e^{(.3)(1.57)} = 3.48$
T_9	Vertical 2'-0¼"	$T = 3.48 + (2.02)(.075) = 3.64$
T_{10}	Bend 90°	$T = 3.64\, e^{(1.57)(.3)} = 5.82$
T_{11}	Horizontal 12'-6"	$T = 5.82 + (12.5)(.3)(.075)$ $T = 6.11$
T_{12}	Bend 30°	$T = 6.11\, e^{(.52)(.3)} = 7.14$
T_{13}	straight run 10" slope down 30°	$T = 7.14 + (\frac{10}{12})(.075)(.3\cos 30° - \sin 30°)$ $T = 7.13$
T_{14}	Bend 30°	$T = 7.13\, e^{(.52)(.3)} = 8.34$
T_{15}	Horizontal 6'-4½"	$T = 8.34 + (6.38)(.3)(.075) = 8.48$
T_{16}	Bend 42°	$T = 8.48\, e^{(.3)(.74)} = 10.57$

COMPUTED KTS DATE 9-16-85
CHECKED JRB DATE 9-18-85

T_{17}	Horizontal 6"	$T = 10.57 + (.5)(.3)(.075)$ $T = 10.58$
T_{18}	Bend 42°	$T = 10.58\, e^{(.3)(.74)} = 13.19$
T_{19}	Horizontal $8\frac{1}{2}$"	$T = 13.19 + (.71)(.3)(.075)$ $T = 13.20$
T_{20}	Bend 53°	$T = 13.20\, e^{(.3)(.93)} = 17.42$
T_{21}	Horizontal 5"	$T = 17.42 + (\frac{5}{12})(.3)(.075)$ 17.43
T_{22}	Bend 53°	$T = 17.43\, e^{(.3)(.93)} = 23.01$
T_{23}	Horizontal 5'-$5\frac{1}{4}$"	$T = 23.01 + (5.44)(.075)(.3) = 23.13$
T_{24}	Bend 29°	$T = 23.13 + e^{(.3)(.51)} = 26.93$
T_{25}	Straight run $8\frac{1}{4}$" slope down 29°	$T = 26.93 + (.69)(.075)(.3\cos 29° - \sin 29°)$ $T = 26.91$
T_{26}	Bend 29°	$T = 26.91\, e^{(.3)(.51)} = 31.33$
T_{27}	Horizontal 23"	$T = 31.33 + (1.92)(.3)(.075) = 31.37$
T_{28}	Bend 32°	$T = 31.37\, e^{(.3)(.56)} = 37.29$
T_{29}	Horizontal 4'-$6\frac{1}{4}$"	$T = 37.29 + (4.52)(.075)(.3) = 37.39$
T_{30}	Bend 9°	$T = 37.39\, e^{(.3)(.16)} = 39.19$
T_{31}	Straight run $7\frac{1}{2}$" slope down 9°	$T = 39.19 + (.63)(.075)(.3\cos 9° - \sin 9°)$ $T = 39.20$

TVA 488 (EN DES 3 77)

1PM7274A

COMPUTED KTS DATE 9-16-85

CHECKED JRB DATE 9-18-85

T_{32} Bend 9° $T = 39.20\, e^{(.3)(.16)} = 41.09$

T_{33} Horizontal 8" $T = 41.09 + (\frac{8}{12})(.3)(.075)$

$T = 41.11$

T_{34} Bend 58" $T = 41.11\, e^{(.3)(1.01)} = 55.69$

T_{35} Horizontal $14\frac{1}{2}$" $T = 55.69 + (1.21)(.075)(.3)$

$T = 55.72$

$SWP = \frac{T}{R} = \frac{55.69}{.435} = 128.02$

Total Bends in conduit = 776°

TVA 488 (EN DES 3-77)

IPM7274A

COMPUTED KTS DATE 9-16-85
CHECKED JRB DATE 9-18-85

pull B → C

T_{36}	Vertical $45\frac{3}{4}$"	$T = (4.15)(.075) = .31$
T_{37}	Bend 29°	$T = .31e^{(.31)(.3)} = .36$
T_{38}	Straight run 4" slope up 61°	$T = .36 + (\frac{4}{12})(.075)(.3\cos 61° + \sin 61°)$ $T = .39$
T_{39}	Bend 29°	$T = .39e^{(.31)(.3)} = .45$
T_{40}	Vertical $19'-5\frac{1}{2}$"	$T = .45 + (19.46)(.075) = 1.91$
T_{41}	Bend 90°	$T = 1.91e^{(.3)(1.57)} = 3.06$
T_{42}	Horizontal $10\frac{1}{2}$"	$T = 3.06 + (.88)(.075)(.3) = 3.08$

$SWP = \frac{3.06}{435} = 7.03$

pull B - A

T_{35}	Horizontal $14\frac{1}{2}$"	$T = (1.21)(.075)(.3) = .03$
T_{34}	Bend 58°	$T = .03e^{(.3)(1.01)} = .04$
T_{33}	Horizontal 8"	$T = .04 + (\frac{8}{12})(.075)(.3) = .06$
T_{32}	Bend 9°	$T = .06e^{(.3)(.16)} = .06$
T_{31}	Straight run $7\frac{1}{2}$" slope up 9°	$T = .06 + (.63)(.075)(.3\cos 9° + \sin 9°)$ $T = .08$
T_{30}	Bend 9°	$T = .08e^{(.3)(.16)} = .08$
T_{29}	Horizontal $4'-6\frac{1}{4}$"	$T = .08 + (4.52)(.075)(.3) = .18$
T_{28}	Bend 32°	$T = .18e^{(.3)(.55)} = .21$
T_{27}	Horizontal 23"	$T = .21 + (1.92)(.3)(.075) = .26$

TVA 488 (EN DES 3 77)

1PM7274A

COMPUTED KTS DATE 9-16-85
CHECKED JRB DATE 9-18-85

T_{26}	Bend 29°	$T = .26\, e^{(.3)(.51)} = .30$
T_{25}	Straight run 8½" slope up 29°	$T = .30 + (.66)(.075)(.3\cos 29° + \sin 29°)$ $T = .34$
T_{24}	Bend 29°	$T = .34\, e^{(.3)(.51)} = .40$
T_{23}	Horizontal 5'-5½"	$T = .40 + (5.44)(.075)(.3) = .51$
T_{22}	Bend 53°	$T = .51\, e^{(.3)(.93)} = .67$
T_{21}	Horizontal 5"	$T = .67 + (\frac{5}{12})(.075)(.3) = .68$
T_{20}	Bend 53°	$T = .68\, e^{(.3)(.93)} = .89$
T_{19}	Horizontal 8½"	$T = .89 + (.71)(.3)(.075) = .91$
T_{18}	Bend 42°	$T = .91\, e^{(.3)(.74)} = 1.13$
T_{17}	Horizontal 6"	$T = 1.13 + (.5)(.075)(.3) = 1.14$
T_{16}	Bend 42°	$T = 1.14\, e^{(.3)(.74)} = 1.42$
T_{15}	Horizontal 6'-4½"	$T = 1.42 + (6.35)(.3)(.075) = 1.57$
T_{14}	Bend 30°	$T = 1.57\, e^{(.52)(.3)} = 1.83$
T_{13}	Straight run 10" slope up 30°	$T = 1.83 + (\frac{10}{12})(.075)(.3\cos 30° + \sin 30°)$ $T = 1.88$
T_{12}	Bend 30°	$T = 1.88\, e^{(.52)(.3)} = 2.20$
T_{11}	Horizontal 12'-6"	$T = 2.20 + (12.5)(.075)(.3) = 2.48$
T_{10}	Bend 90°	$T = 2.48\, e^{(1.57)(.3)} = 3.98$
T_6	Vertical 2'-0½" down	$T = 3.98 - (2.02)(.075) = 3.84$