CONDUIT 2PM7400B [3I] From pull point B to A

CABLES (see below)

V2

COMPUTED RMS DATE 9/7/85

CHECKED JRB DATE 9-17-85

should be B according to schedule

			weight	CSA
2PL1084A	1-3/c #16	WVB	.089	.118
1085A	1-2/c #16	WVA	.075	.098
2PM 2435B	1-2/c #16	WVA	.075	.098
2485B	1-2/c #16	WVA	.075	.098
3725B	1-2/c #16	WVA	.075	.098
3727B	1-2/c #16	WVA	.075	.098
3765B	1-2/c #16	WVA	.075	.098
3806B	1-2/c #16	WVA	.075	.098
3921B	1-2/c #16	WVA	.075	.098
4425B	1-2/c #16	WVA	.075	.098
4450B	1-2/c #16	WVA	.075	.098
4456B	1-2/c #16	WVA	.075	.098
4458B	1-2/c #16	WVA	.075	.098
4486B	1-2/c #16	WVA	.075	.098
4488B	1-2/c #16	WVA	.075	.098
4496B	1-2/c #16	WVA	.075	.098
4498B	1-2/c #16	WVA	.075	.098
4501B	1-2/c #16	WVA	.075	.098
2RM 381B	1-2/c #16	WVA	.075	.098
383B	1-8/c #22	WWK	.170	.197
393B	1-2/c #16	WVA	.075	.098
395B	1-8/c #22	WWK	.170	.197
448B	1-1/c #22	WTK	.032	.048
450B	1-1/c #22	WTK	.032	.048
452B	1-1/c #22	WTK	.032	.048
454B	1-1/c #22	WTK	.032	.048
26 cables			1.98	2.57 in²

$w_f = 1.98 \frac{lb}{ft}$ (2.96 in² available)

$W_c = 1.4$

$\underline{K} = K W_c = (0.3)(1.4) = 0.42$

TVA 11030 (WM-7-75)

COMPUTED RWS DATE 9/7/85
CHECKED JRB DATE 9-7-85

SEGMENT	TYPE	ALGORITHM	TENSION
T_1	Straight	$T_1 = LW_c \underline{K} + \cancel{T_0}^{\,0}$ $= (3.42)(1.98)(0.42)$	$= 2.84$
T_2	Vert bend (44°)	$T_2 = T_1 e^{\underline{K}b}$ $= 2.84 e^{(0.42)(0.77)}$	$= 3.92$
T_3	Down slope (2°)	$T_3 = LW_c(\underline{K}\cos a - \sin a) + T_2$ $= (6.67)(1.98)(0.42\cos 2° - \sin 2°) + 3.92$	$= 9.01$
T_4	Vert bend (44°)	$T_4 = T_3 e^{\underline{K}b}$ $= 9.01 e^{(0.42)(0.77)}$	$= 12.44$
T_5	Straight	$T_5 = LW_c \underline{K} + T_4$ $= (4.08)(1.98)(0.42) + 12.44$	$= 15.84$
T_6	Vert bend (21°)	$T_6 = T_5 e^{\underline{K}b}$ $= 15.84 e^{(0.42)(0.37)}$	$= 18.47$
T_7	Down slope (7°)	$T_7 = LW_c(\underline{K}\cos a - \sin a) + T_6$ $= (1.5)(1.98)(0.42\cos 7° - \sin 7°) + 18.47$	$= 19.35$
T_8	Vert bend (21°)	$T_8 = T_7 e^{\underline{K}b}$ $= 19.35 e^{(0.42)(0.37)}$	$= 22.60$

TVA 11030 (WM 7-75)

COMPUTED RMS DATE 9/7/85
CHECKED JRB DATE 9-17-85

SEGMENT	TYPE	ALGORITHM	TENSION
T_9	Straight	$T_9 = LW_t \underline{K} + T_8$ $= (2.92)(1.98)(0.42) + 22.60 =$	25.03
T_{10}	Vert bend (8°)	$T_{10} = T_9 e^{\underline{K}b}$ $= 25.03 e^{(0.42)(0.14)}$	= 26.54
T_{11}	Up slope (7°)	$T_{11} = LW_t(\sin a + \underline{K} \cos a) + T_{10}$ $= (1.79)(1.98)(\sin 7° + 0.42 \cos 7°) + 26.54$	= 28.45
T_{12}	Vert bend (8°)	$T_{12} = T_{11} e^{\underline{K}b}$ $= 28.45 e^{(0.42)(0.14)}$	= 30.17
T_{13}	Straight	$T_{13} = LW_t \underline{K} + T_{12}$ $= (3.17)(1.98)(0.42) + 30.17 =$	32.81
T_{14}	Vert bend (7°)	$T_{14} = T_{13} e^{\underline{K}b}$ $= 32.81 e^{(0.42)(0.12)}$	= 34.53
T_{15}	Up slope (8°)	$T_{15} = LW_t(\sin a + \underline{K} \cos a) + T_{14}$ $= (1.83)(1.98)(\sin 8° + 0.42 \cos 8°) + 34.53$	= 36.55
T_{16}	Vert bend (7°)	$T_{16} = T_{15} e^{\underline{K}b}$ $= 36.55 e^{(0.42)(0.12)}$	= 38.43

VA 11030 (WM 7-75)

COMPUTED RMS DATE 9/7/85
CHECKED JRB DATE 9-17-85

SEGMENT	TYPE	ALGORITHM	TENSION
T_{17}	Straight	$T_{17} = LW_t \underline{K} + T_{16}$	
		$= (4.92)(1.98)(0.42) + 38.43$	$= 42.52$
T_{18}	Vert bend (8°)	$T_{18} = T_{17} e^{\underline{K}b}$	
		$= 42.52\, e^{(0.42)(0.14)}$	$= 45.10$
T_{19}	Down slope (2°)	$T_{19} = LW_t(\underline{K}\cos a - \sin a) + T_{18}$	
		$= (1.79)(1.98)(0.42\cos 2° - \sin 2°) + 45.10$	$= 46.46$
T_{20}	Vert bend (8°)	$T_{20} = T_{19} e^{\underline{K}b}$	
		$= 46.46\, e^{(0.42)(0.14)}$	$= 49.28$
T_{21}	Straight	$T_{21} = LW_t \underline{K} + T_{20}$	
		$= (3.83)(1.98)(0.42) + 49.28$	$= 52.47$
T_{22}	Vert bend (34°)	$T_{22} = T_{21} e^{\underline{K}b}$	
		$= 52.47 e^{(0.42)(0.59)}$	$= 67.31$
T_{23}	Up slope (34°)	$T_{23} = LW_t(\sin a + \underline{K}\cos a) + T_{22}$	
		$= (2.13)(1.98)(\sin 34° + 0.42\cos 34°) + 67.31$	$= 71.13$
T_{24}	Vert bend (34°)	$T_{24} = T_{23} e^{\underline{K}b}$	
		$= 71.15 e^{(0.42)(0.59)}$	$= 91.13$

VA 11030 (WM-7-75)

COMPUTED RMS DATE 9/7/85
CHECKED JRB DATE 9-17-85

SEGMENT	TYPE	ALGORITHM	TENSION
T_{25}	Straight	$T_{25} = LW_t \underline{K} + T_{24}$	
		$= (11.06)(1.98)(0.42) + 91.13$	$= 100.33$
T_{26}	Horiz bend (41°)	$T_{26} = T_{25} e^{\mu b}$	
		$= 100.33 e^{(0.42)(0.86)}$	$= 143.68$
T_{27}	Straight	$T_{27} = LW_t \underline{K} + T_{26}$	
		$= (2.42)(1.98)(0.42) + 145.68$	$= 145.69$
T_{28}	Horiz bend (90°)	$T_{28} = T_{27} e^{\mu b}$	
		$= 145.69 e^{(0.42)(1.57)}$	$= 281.71$
T_{29}	Down slope (90°)	$T_{29} = -LW_t + T_{28}$	
		$= -(3.67)(1.98) + 281.71$	$= 274.44$

$SWP = x\left[\frac{T}{R}\right]$ @ T_{28} $R = 13''$

$x = .24$

$= 0.24\left[\frac{281.71}{.955}\right]$

$= \underline{\underline{70.80 \text{ lb/ft}}}$

VA 11030 (WM 7-75)

NV2

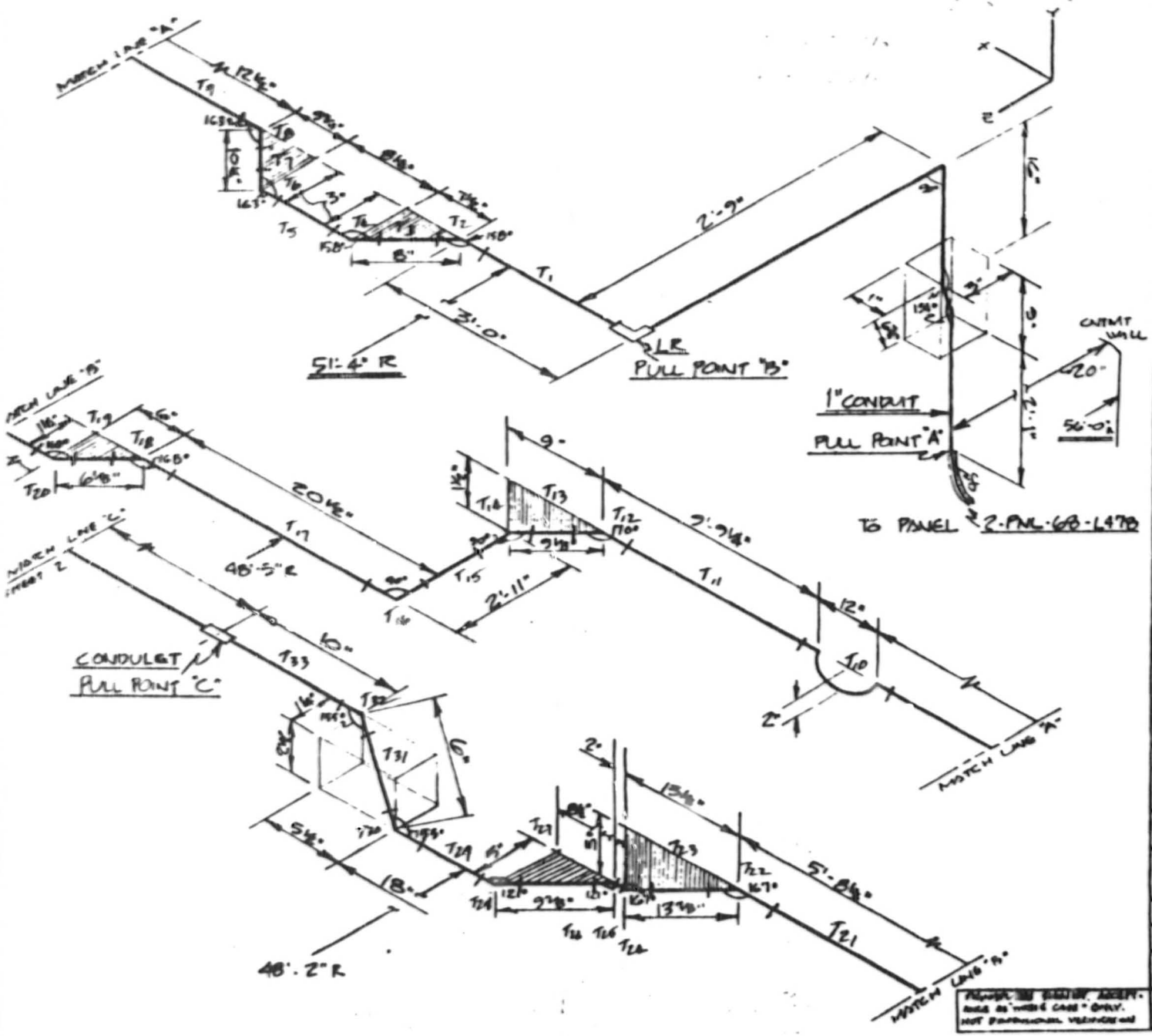

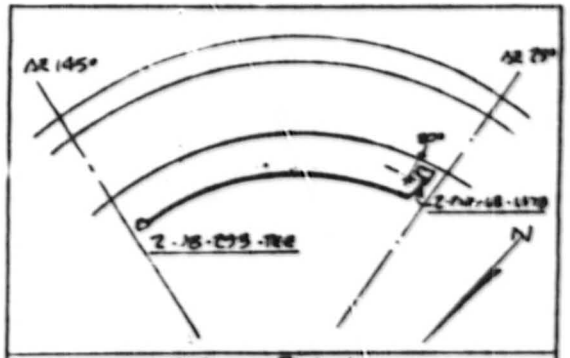

KEY PLAN
U2 REACTOR BLDG ELEV. 703.

NOTES:

1. ALL BENDS HAVE RADIUS OF 5⅜" UNLESS OTHERWISE NOTED.
2. TOLERANCES AS SPECIFIED BY G-38
3. ALL BENDS NOT SPECIFIED ARE 90°
4. CABLE UNIDS | MANUFACTURER
   2PM605D | LATER
5. REF DWG #'s 4SIV870-5 & 6
6. FROM PULL POINT "D" TO PULL POINT "E" 13'-7" IS A STRAIGHT RUN AND DOES NOT FOLLOW CURVATURE OF R.B.
7. ALL DIMENSIONS CENTER LINE TO CENTER LINE.

* SHEET #1 (SEE SHEET 2 FOR CONTINUATION)

REACTOR BUILDING - UNIT 2

RACEWAY ISOMETRIC DWG.
ELEV. 703 COND NO. 2PM 7869D *

WATTS BAR NUCLEAR PLT TVA OC

[illegible]	[illegible]	[illegible]
8/16/85	N/A EEB-EP-22.29 SAMPLE PROGRAM	
[illegible]	[illegible]	

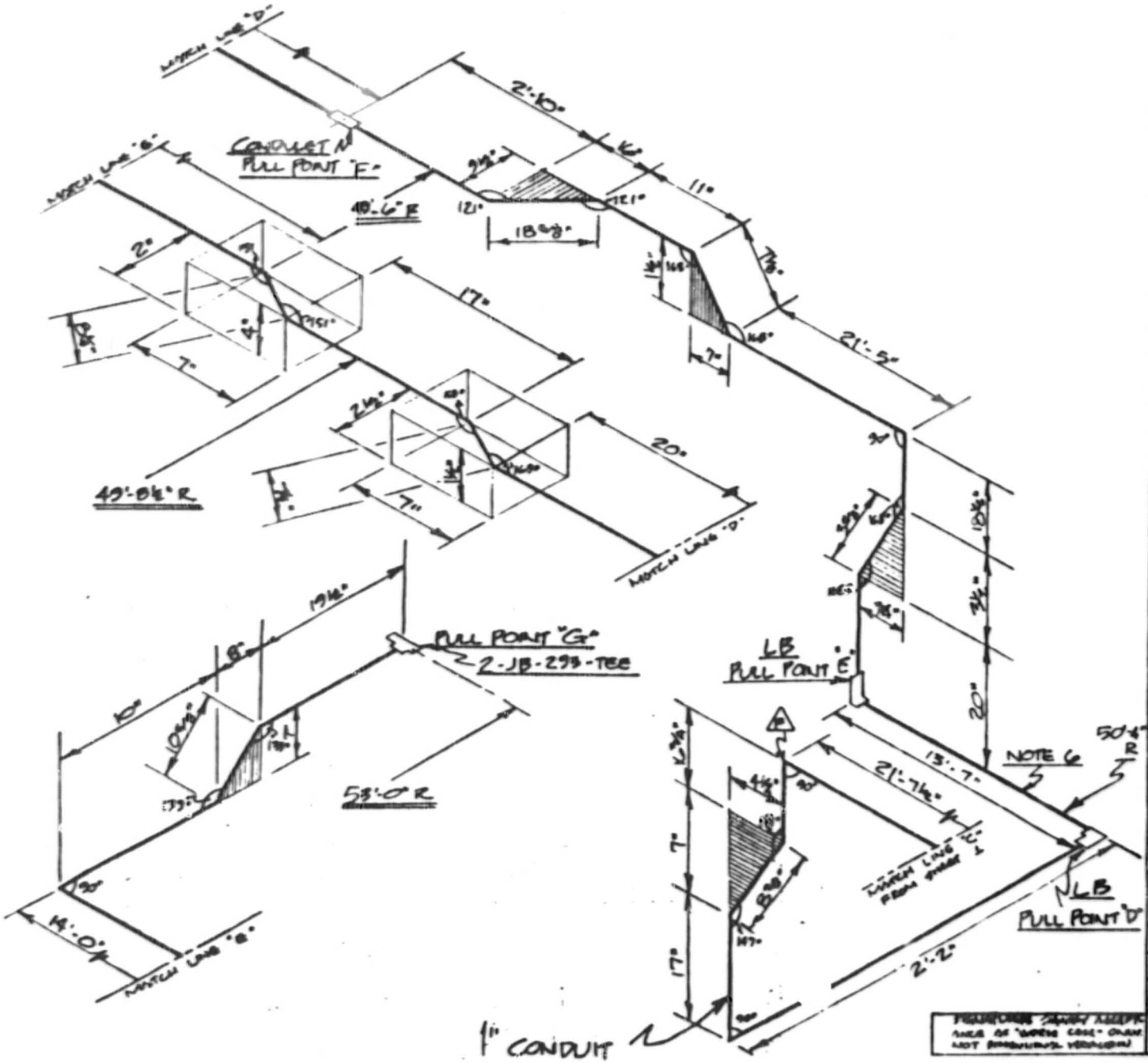

FOR KEY PLAN SEE SHEET 1

FOR NOTES SEE SHEET 1

* SHEET #2

REACTOR BUILDING - UNIT 2

RACEWAY ISOMETRIC DWG.
ELEV. 703 COND NO. 2PM 78630 *

WATTS BAR NUCLEAR PLT. TVA OC

ENGINEER	VERIFICATION	APPROVED
[signature]	[signature]	[signature]

DATE	DESIGNING NUMBER
8/16/85	NEA EEB-EP-22.89 SAMPLE PROGRAM

[signature]	[signature]

FEATURES SHOWN ACCEPTANCE AS "WORSE CASE" ONLY NOT FINANCIAL VERIFICATION

CONDUIT NO. 2FM 7869 D (II)
CABLE NO. 2PM605 D (1-2/C #16, WVA)
(.075#/FT)

COMPUTED JRB DATE 8-26-85
CHECKED RMS DATE 9/12/85

$K = 0.3$

PULL POINT B TO PULL POINT C

$T_1 = KLW_t$ + PRIOR TENSION
$= (.3)(3)(.075) + 0$
$= 0.068$

$T_2 = T_1 e^{Kb}$
$= (0.068)\, e^{(.3)(.384)}$
$= (0.068)(1.122)$
$= 0.076$

$T_3 = LWK$ + PRIOR TENSION
$= (.667)(.075)(.3) + 0.076$
$= 0.091$

$T_4 = T_3 e^{Kb}$
$= (0.091)\, e^{(.3)(.384)}$
$= (0.091)(1.122)$
$= 0.102$

$T_5 = LWK$ + PRIOR TENSION
$= (.688)(.075)(.3) + 0.102$
$= 0.117$

$T_6 = T_5 e^{Kb}$
$= (0.117)\, e^{(.3)(.297)}$
$= (0.117)(1.093)$
$= 0.128$

$T_7 = LWK$ + PRIOR TENSION
$= (.954)(.075)(.3) + 0.128$
$= 0.147$

$T_8 = T_7 e^{Kb}$
$= (0.147)\, e^{(.3)(.297)}$
$= (0.147)(1.093)$
$= 0.161$

$T_9 = LWK$ + PRIOR TENSION
$= (1.042)(.075)(.3) + 0.161$
$= 0.184$

TVA 11030 (WM-7-75)

COMPUTED JRB DATE 8-26-85
CHECKED AMS DATE 9/12/85

$T_{10} = T_9 e^{\mu b}$
$= (0.184) e^{(.3)(3.141)}$
$= (0.184)(2.567)$
$= 0.472$

T_{11} = LWK + PRIOR TENSION
$= (9.771)(.075)(.3) + 0.472$
$= 0.692$

$T_{12} = T_{11} e^{\mu b}$
$= (0.692) e^{(.3)(0.175)}$
$= (0.692)(1.054)$
$= 0.729$

T_{13} = LWK + PRIOR TENSION
$= (.760)(.075)(.3) + 0.729$
$= 0.746$

$T_{14} = T_{13} e^{\mu b}$
$= (0.746) e^{(.3)(1.571)}$
$= (0.746)(1.602)$
$= 1.195$

T_{15} = LWK + PRIOR TENSION
$= (2.917)(.075)(.3) + 1.195$
$= 1.261$

$T_{16} = T_{15} e^{\mu b}$
$= (1.261) e^{(.3)(1.571)}$
$= (1.261)(1.603)$
$= 2.021$

T_{17} = LWK + PRIOR TENSION
$= (1.708)(.075)(.3) + 2.021$
$= 2.059$

$T_{18} = T_{17} e^{\mu b}$
$= (2.059) e^{(.3)(.209)}$
$= (2.059)(1.065)$
$= 2.193$

T_{19} = LWK + PRIOR TENSION
$= (.510)(.075)(.3) + 2.193$
$= 2.204$

TVA 11030 (WM-7-75)

COMPUTED JRB DATE 8-26-85
CHECKED FMS DATE 9/12/85

$T_{20} = T_{19} e^{\mu b}$
$= (2.204) e^{(.3)(.209)}$
$= (2.204)(1.065)$
$= 2.347$

$T_{21} =$ LWK + PRIOR TENSION
$= (5.708)(.075)(.3) + 2.347$
$= 2.475$

$T_{22} = T_{21} e^{\mu b}$
$= 2.475\, e^{(.3)(.227)}$
$= (2.475)(1.070)$
$= 2.649$

$T_{23} =$ LWK + PRIOR TENSION
$= (1.156)(.075)(.3) + 2.649$
$= 2.675$

$T_{24} = T_{23} e^{\mu b}$
$= (2.675)\, e^{(.3)(.227)}$
$= (2.675)(1.070)$
$= 2.864$

$T_{25} =$ LWK + PRIOR TENSION
$= (.167)(.075)(.3) + 2.864$
$= 2.868$

$T_{26} = T_{25} e^{\mu b}$
$= (2.868) e^{(.3)(1.030)}$
$= (2.864)(1.362)$
$= 3.907$

$T_{27} =$ LWK + PRIOR TENSION
$= (0.823)(.075)(.3) + 3.907$
$= 3.926$

$T_{28} = T_{27} e^{\mu b}$
$= (3.926) e^{(.3)(1.030)}$
$= (3.926)(1.362)$
$= 5.348$

$T_{29} =$ LWK + PRIOR TENSION
$= (1.5)(.075)(.3) + 5.348$
$= 5.382$

COMPUTED JRB DATE 8-26-85
CHECKED RMS DATE 9/12/85

$T_{30} = T_{29} e^{\mu b}$
$= (5.382) e^{(.3)(.436)}$
$= (5.382)(1.140)$
$= 6.135$

$T_{31} = WL(\sin\alpha + \mu \cos\alpha) + \text{PRIOR TENSION}$
$= (.075)(.5)(\sin 25° + (.3)\cos 25°) + 6.135$
$= (.075)(.5)(.695) + 6.135$
$= 6.161$

$T_{32} = T_{31} e^{\mu b}$
$= (6.161) e^{(.3)(.436)}$
$= (6.161)(1.140)$
$= 7.024$

$T_{33} = LW\mu + \text{PRIOR TENSION}$
$= (.833)(.075)(.3) + 7.024$
$= 7.043$

$SWP = \frac{W_c T_{32}}{2R}$
$= \frac{(1.0)(7.024)}{(2)(.435)}$
$= 8.07$

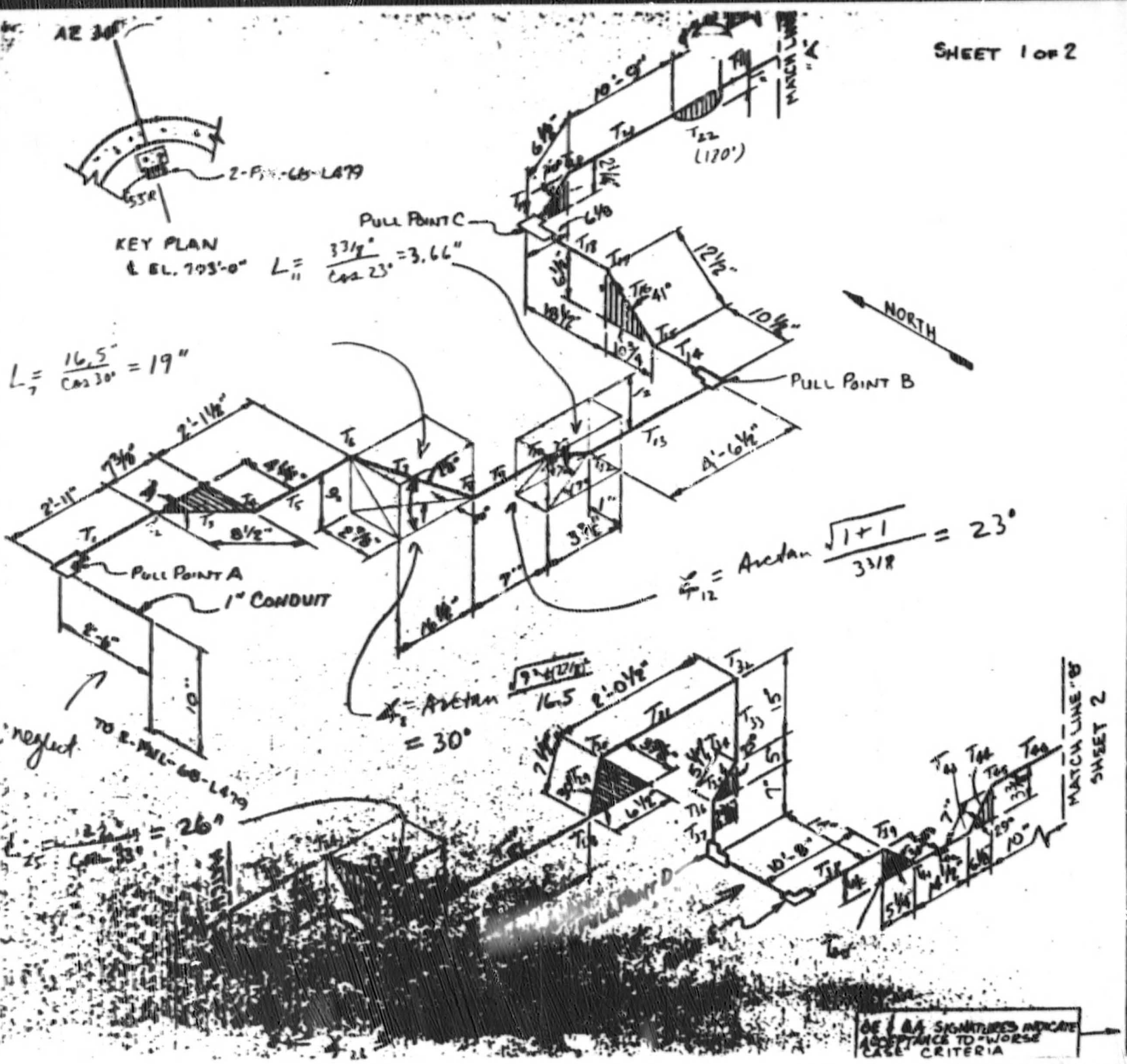

NOTES:

1. ALL BENDS HAVE A RADIUS OF 5.5" UNITS OTHERWISE NOTED (1" I CONDUIT)
2. TOLERANCES AS SPECIFIED [illegible]
3. ALL BENDS NOT SPECIFIED ARE 90°
4. CABLE UNID | MFG
   2PM 625 F | LATER
   1-2/C # 16 WVA NV2F (Instr.)
5. REF. DWGS: 45W 870-5,6
6. ALL DIMENSIONS ℄.

OD = .387"
#/ft = .075

11% fill

REACTOR BUILDING UNIT 2.

RACEWAY ISOMETRIC DW CONDUIT # 2PM 7872 F

WATTS BAR NUCLEAR PLA TVA — OC

ENGINEER: Charles L. Cohen Jr. | DATE: 8-23-85

VERIFICATION: [illegible]

APPROVED: [illegible]

DRAWING NO: NA
EEB-EP-22.24
SAMPLE PROGRAM SHEET-1 OF 2

OE: | QA:

SHEET 2 OF 2

FOR GENERAL NOTES SEE SHEET 1 OF 2.

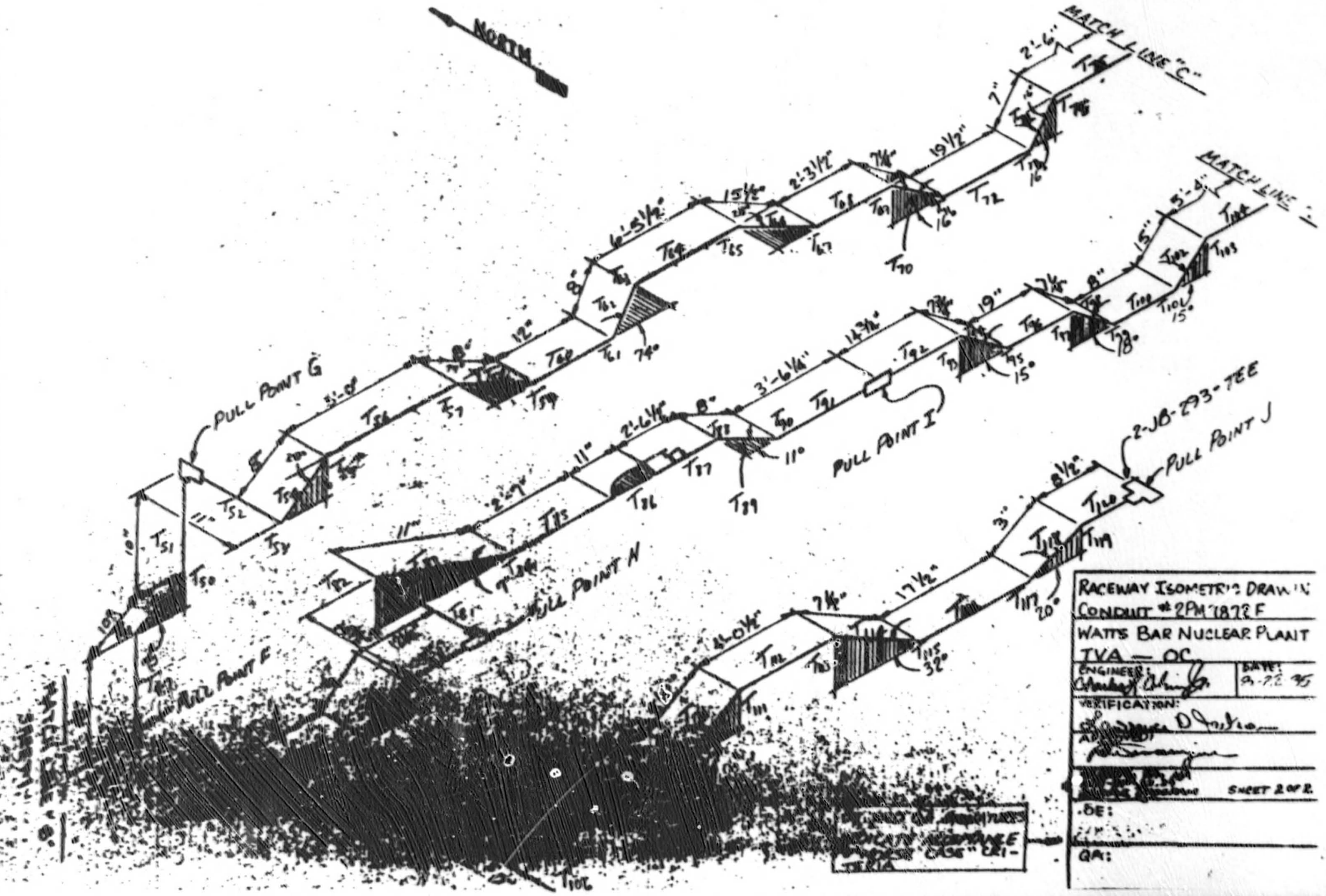

CONDUIT 2PM-7872F

(Single cable, ..PP)

$K = .3$, $W = .075$,

SHEET 1 OF 9

COMPUTED LHB DATE 8-27-85

CHECKED JRB DATE 8-28-85

PULL A-B (90° bend total)

(2-PNL-65-L479 to Pull Point A is negligible, due to short length + 1-90° bend)

PULL B-A (166°)

T_{13} Horiz. Straight $T = LWK = \left(4 + \frac{6.5}{12}\right) \times .075 \times .3$

$= .10\#$

T_{12} Vertical Bend (23°) $T = T_{13} e^{K\theta} = .1\ e^{.3 \times .40} = .1 \times 1.13$

$= .12\#$

T_{11} Up Ramp (7°) $T = WL(\sin\alpha + K\cos\alpha) + T_{12}$

$= .075 \times \frac{3.66}{12}(\sin 7° + .3\cos 7°) + .12$

$= .12\#$

T_{10} Vertical Bend (23°) $T = T_{11} e^{K\theta} = .12\ e^{.3 \times .40} = .12 \times 1.13$

$= .14\#$

T_9 Horiz. Straight $T = LWK + T_{10} = \left(\frac{7}{12}\right) \times .075 \times .3 + .14$

$= .15\#$

T_8 Vertical Bend (30°) $T = T_9 e^{K\theta} = .15\ e^{.3 \times .52} = .15 \times 1.17$

$= .18\#$

T_7 Up Ramp (28°) $T = WL(\sin\alpha + K\cos\alpha) + T_8$

$= .075 \times \frac{19}{12}(\sin 28° + .3\cos 28°) + .18$

$= .27\#$

T_6 Vertical Bend (30°) $T = T_7 e^{K\theta} = .27\ e^{.3 \times .52} = .27 \times 1.17$

$= .31\#$

TVA 11030 (WM-7-75)

COMPUTED RHH DATE 8-27-85
CHECKED JRB DATE 8-28-85

T_5 Horiz. Straight $T = LWK + T_6 = \left(2+\frac{6.5}{12}\right) \times .075 \times .3 + .31$
$= .36$ #

T_4 Horiz. Bend (30°) $T = T_5 e^{Kb} = .36\, e^{.3 \times .52} = .36 \times 1.17$
$= .42$#

T_3 Horiz Straight $T = LWK + T_4 = \frac{8.5}{12} \times .075 \times .3 + .42$
$= .44$ #

T_2 Horiz. Bend (30°) $T = T_3 e^{Kb} = .44\, e^{.3 \times .52} = .44 \times 1.17$
$= .51$#

T_1 Horiz. Straight $T = LWK + T_2 = \left(2+\frac{11}{12}\right) \times .075 \times .3 + .51$
$= .58$ #

$$SWP_{BA} = T_2/R = \frac{.51}{0.435}$$

$$\boxed{SWP_{BA} = 1.17 \text{ \#/ft}}$$

CONDUIT 2PM-7872F
(Single cable)

COMPUTED RHD DATE 8-27-85
CHECKED JRB DATE 8-28-85

PULL B to C 82'

This pull is negligible for similar reason given for "A-B".

PULL D to C (466')

T_{37} Vertical Straight (Up) $T = LW = \frac{7}{12} \times .075$
$= .04\#$

T_{36} Vertical Bend (25°) $T = T_{37} e^{Kb} = .04\, e^{.3 \times .44} = .04 \times 1.14$
$= .05\#$

T_{35} Up Ramp (65°) $T = WL(\sin\alpha + K\cos\alpha) + T_{36}$
$= .075 \times \frac{5.5}{12}(\sin 65° + .3\cos 65°) + .05$
$= .09\#$

T_{34} Vertical Bend (25°) $T = T_{35} e^{Kb} = .09\, e^{.3 \times .44} = .09 \times 1.14$
$= .10\#$

T_{33} Vertical Straight (Up) $T = LW + T_{34} = \frac{15}{12} \times .075 + .10$
$= .19\#$

T_{32} Vertical Bend (90°) $T = T_{33} e^{Kb} = .19\, e^{.3 \times \pi/2} = .19 \times 1.60$
$= .31\#$

T_{31} Horiz. Straight $T = LWK + T_{32} = \left(2 + \frac{5}{12}\right) \times .075 \times .3 + .31$
$= .35\#$

T_{30} Horiz. Bend (30°) $T = T_{31} e^{Kb} = .35\, e^{.3 \times .52} = .35 \times 1.17$
$= .41\#$

T_{29} Horiz Straight $T = LWK + T_{30} = \frac{7.5}{12} \times .075 \times .3 + .41$
$= .43\#$

T_{28} Horiz. Bend (30°) $T = T_{29} e^{Kb} = .43\, e^{.3 \times .52} = .43 \times 1.17$
$= .50\#$

TVA 11030 (WM-3-75)

COMPUTED RHG DATE 8-27-85
CHECKED JRB DATE 8-28-85

T_{27} Horiz. Straight $T = LWK + T_{28} = \left(11 + \frac{4.5}{12}\right) \times .075 \times .3 + .5$
$= .75$ #

T_{26} Vertical Bend (33°) $T = T_{27} e^{Kb} = .75 e^{.3 \times .58} = .75 \times 1.19$
$= .90$ #

T_{25} Up Ramp (31°) $T = WL(\sin\alpha + K\cos\alpha) + T_{26}$
$= .075 \times \frac{26}{12} (\sin 31° + .3 \cos 31°) + .90$
$= 1.02$ #

T_{24} Vertical Bend (33°) $T = T_{25} e^{Kb} = 1.02 e^{.3 \times .58} = 1.02 \times 1.19$
$= 1.21$ #

T_{23} Horiz. Straight $T = LWK + T_{24} = \left(3 + \frac{3}{12}\right) \times .075 \times .3 + 1.21$
$= 1.29$ #

T_{22} Vertical Bend (180° saddle) $T = T_{23} e^{Kb} = 1.29 e^{.3 \times \pi} = 1.29 \times 2.57$
$= 3.31$ #

T_{21} Horiz. Straight $T = LWK + T_{22} = \left(10 + \frac{9}{12}\right) \times .075 \times .3 + 3.31$
$= 3.55$ #

T_{20} Vertical Bend (20°) $T = T_{21} e^{Kb} = 3.55 e^{.3 \times .35} = 3.55 \times 1.11$
$= 3.94$ #

T_{19} Down Ramp (20°) $T = WL(K\cos\alpha - \sin\alpha) + T_{20}$
$= .075 \times \frac{6.5}{12} (.3 \cos 20° - \sin 20°) + 3.94$
$= 3.94$ #

$$SWP_{DC} = T_{20}/R = \frac{3.94}{0.435}$$

$$\boxed{SWP_{DC} = 9.06 \text{ \#/ft.}}$$

This is the worst case situation!

TVA 11030 (WW-7-75)

CONDUIT 2PM-7872 F
(Single cable)

COMPUTED RHH DATE 8-27-85
CHECKED JRB DATE 8-28-85

PULL D to E (0°)

This pull is negligible since it is a short straight section.

PULL E to F (178°)

This pull is negligible since it has fewer bends and is shorter than PULL D to C.

PULL F to G (15°)

T_{47} Vertical Straight (Up) $T = LW = 1.5 \times .075$
$= .11\#$

T_{48} Vertical Bend (15°) $T = T_{47} e^{K\theta} = .11 e^{.3 \times .26} = .11 \times 1.08$
$= .12\#$

T_{49} Up Ramp (75°) $T = WL(\sin\alpha + K\cos\alpha) + T_{48}$
$= .075 \times \frac{10}{12} (\sin 75° + .3 \cos 75°) + .12$
$= .19\#$

T_{50} Vertical Bend (15°) $T = T_{49} e^{K\theta} = .19 e^{.3 \times .26} = .19 \times 1.08$
$= .20\#$

T_{51} Vertical Straight (Up) $T = WL + T_{50} = .075 \times \frac{10}{12} + .20$
$= .26\#$

$$SWP_{FG} = T_{50}/R = \frac{.20}{.435}$$

$$\boxed{SWP_{FG} = .46\ \#/ft}$$

VA 11030 (WM-7-75)

CONDUIT 2PM 7872F
(single cable)

COMPUTED RHB DATE 8-27-85
CHECKED JRB DATE 8-28-85

PULL G&H (558')

T_{52} Horiz. Straight $T = LWK = \frac{11}{12} \times .075 \times .3$
$= .02\#$

T_{53} Vertical Bend (90°) $T = T_{52} e^{Kb} = .02 e^{.3 \times \pi/2} = .02 \times 1.60$
$= .03\#$

T_{54} Up Ramp (28°) $T = WL(\sin\alpha + K\cos\alpha) + T_{53}$
$= .075 \times \frac{8}{12}(\sin 28° + .3\cos 28°) + .03$
$= .07\#$

T_{55} Vertical Bend (28°) $T = T_{54} e^{Kb} = .07 e^{.3 \times .49} = .07 \times 1.16$
$= .08\#$

T_{56} Horiz. Straight $T = LWK + T_{55} = 3 \times .075 \times .3 + .08$
$= .15\#$

T_{57} Horiz. Bend (74°) $T = T_{56} e^{Kb} = .15 e^{.3 \times 1.29} = .15 \times 1.47$
$= .22\#$

T_{58} Horiz. Straight $T = LWK + T_{57} = \frac{8}{12} \times .075 \times .3 + .22$
$= .23\#$

T_{59} Horiz. Bend (74°) $T = T_{58} e^{Kb} = .23 e^{.3 \times 1.29} = .23 \times 1.47$
$= .34\#$

T_{60} Horiz. Straight $T = LWK + T_{59} = 1 \times .075 \times .3 + .34$
$= .37\#$

T_{61} Horiz. Bend (74°) $T = T_{60} e^{Kb} = .37 e^{.3 \times 1.29} = .37 \times 1.47$
$= .54\#$

T_{62} Horiz. Straight $T = LWK + T_{61} = \frac{8}{12} \times .075 \times .3 + .54$
$= .55\#$

TVA 11030 (WM-7-75)

COMPUTED RHB DATE 8-27-85
CHECKED JRB DATE 8-29-85

T_{63} Horiz. Bend (74°) $T = T_{62} e^{\mu b} = .55 e^{.3 \times 1.29} = .55 \times 1.47$
$= .82$ #

T_{64} Horiz. Straight $T = LWK + T_{63} = \left(6 + \frac{5.5}{12}\right) \times .075 \times .3 + .82$
$= .96$ #

T_{65} Horiz. Bend (28°) $T = T_{64} e^{\mu b} = .96 e^{.3 \times .49} = .96 \times 1.16$
$= 1.11$ #

T_{66} Horiz Straight $T = LWK + T_{65} = \frac{15.5}{12} \times .075 \times .3 + 1.11$
$= 1.14$ #

T_{67} Horiz. Bend (28°) $T = T_{66} e^{\mu b} = 1.14 e^{.3 \times .49} = 1.14 \times 1.16$
$= 1.32$ #

T_{68} Horiz Straight $T = LWK + T_{67} = \left(2 + \frac{3.5}{12}\right) \times .075 \times .3 + 1.32$
$= 1.38$ #

T_{69} Vertical Bend (16°) $T = T_{68} e^{\mu b} = 1.38 e^{.3 \times .28} = 1.38 \times 1.09$
$= 1.50$ #

T_{70} Down Ramp (16°) $T = WL(k \cos\alpha - \sin\alpha) + T_{69}$
$= .075 \times \frac{7.25}{12}(.3 \cos 16° - \sin 16°) + 1.50$
$= 1.50$ #

T_{71} Vertical Bend (16°) $T = T_{70} e^{\mu b} = 1.5 e^{.3 \times .3} = 1.5 \times 1.09$
$= 1.63$ #

T_{72} Horiz. Straight $T = LWK + T_{71} = \frac{19.5}{12} \times .075 \times .3 + 1.63$
$= 1.66$ #

T_{73} Vertical Bend (16°) $T = T_{72} e^{\mu b} = 1.66 e^{.3 \times .28} = 1.66 \times 1.09$
$= 1.81$ #

COMPUTED RHM DATE 8-27-85
CHECKED JRB DATE 8-28-85

T_{74} Up Ramp (16°) $T = WL(\sin\alpha + K\cos\alpha) + T_{73}$
$= .075 \times \frac{7}{12}(\sin 16° + .3\cos 16°) + 1.81$
$= 1.83\#$

T_{75} Vertical Bend (16°) $T = T_{74}e^{K\theta} = 1.83\, e^{.3\times.28} = 1.83 \times 1.09$
$= 1.99\#$

T_{76} Horiz. Straight $T = LWK + T_{75} = 2.5 \times .075 \times .3 + 1.99$
$= 2.05\#$

T_{77} Vertical Bend (12°) $T = T_{76}e^{K\theta} = 2.05 e^{.3\times.21} = 2.05 \times 1.06$
$= 2.18\#$

T_{78} Up Ramp (12°) $T = WL(\sin\alpha + K\cos\alpha) + T_{77}$
$= .075 \times .5(\sin 12° + .3\cos 12°) + 2.18$
$= 2.20\#$

T_{79} Vertical Bend (12°) $T = T_{78}e^{K\theta} = 2.2\, e^{.3\times.21} = 2.2 \times 1.06$
$= 2.35\#$

T_{80} Horiz. Straight $T = LWK + T_{79} = \frac{12.5}{12} \times .075 \times .3 + 2.35$
$= 2.37\#$

$$SWP_{GH} = \frac{T_{79}}{R} = \frac{2.35}{.435}$$

$$\boxed{SWP_{GH} = 5.40\ \#/ft}$$

TVA 11030 (WM-7-75)

CONDUIT 2PM-7872 F
(single cable)

COMPUTED RHS DATE 8-27-85
CHECKED JRB DATE 8-28-85

PULL I to H (299°)

This is negligible when compared to other runs – it is shorter + has fewer bends than Pull G to H.

PULL J to I (264°)

This is similar to PULL G to H, w/ only about half the bend total; therefore it is negligible.

PULLS C to B, C to D, E to D, F to E, G to F, H to G

These are negligible compared w/ their respective reverse pulls calculated above, due to basically downward pulls.

The worst case is therefore that of Pull D to C (SWP = 9.06 lbs. per foot).

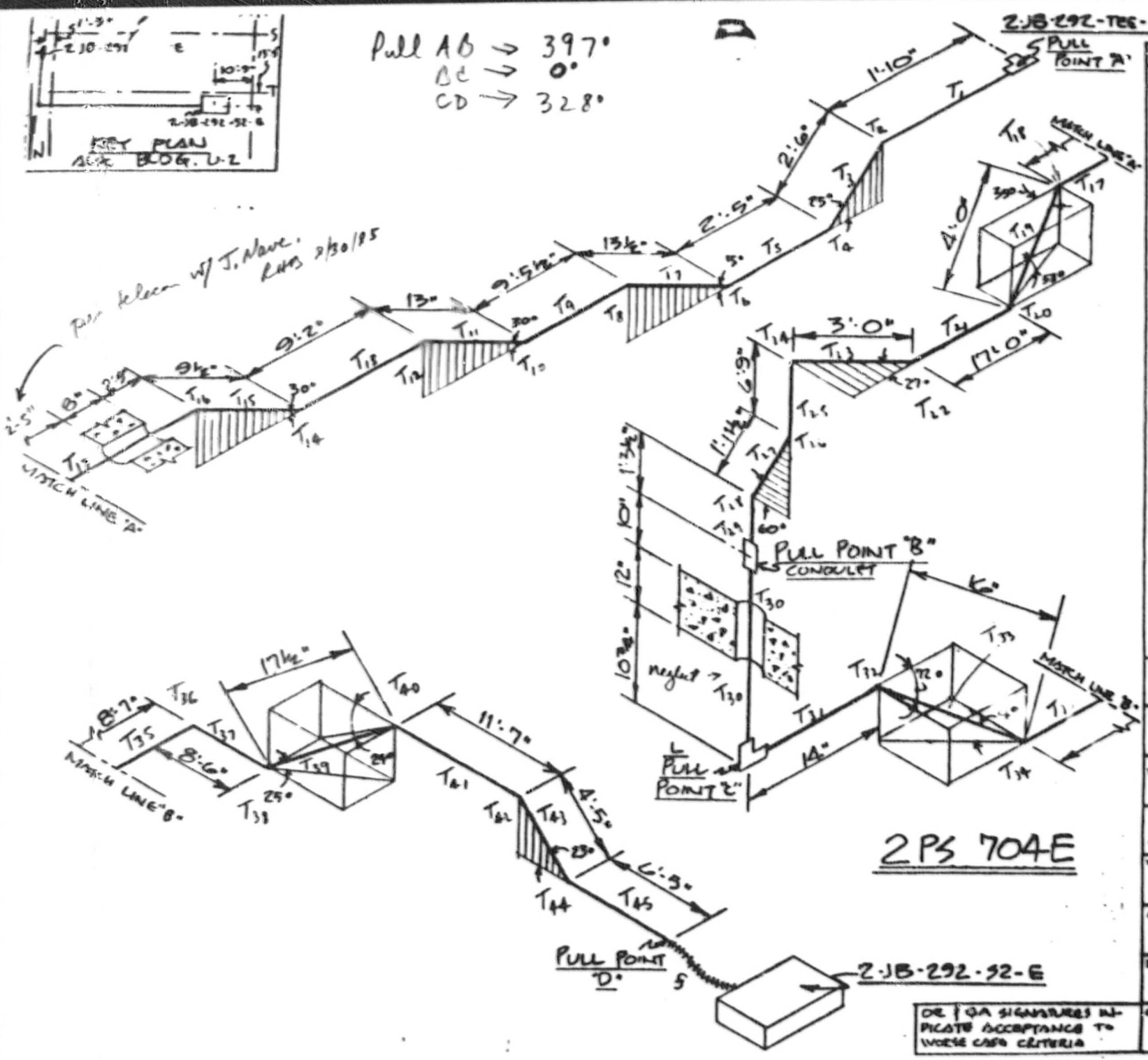

NOTES:

1. ALL BENDS HAVE A RADIUS OF 8¼" UNLESS OTHERWISE NOTED. (1½I)
2. TOLERANCES AS SPECIFIED BY EP 22.29
3. ALL BENDS NOT SPECIFIED ARE 90°
4. CABLE UNID | MANUFACTURER

CABLE UNID	MANUFACTURER
2PS302E	LATER
303E	LATER
304E	LATER
305E	LATER
Each is	1-2/0 #14 WHB-1
NYZE	RCP "Control"

.309" ØD .075 CSA
0.070 #/ft
5. REF. DWG #
45WB28-31,2,9
45WB26-3,31
6. ALL DIMENSIONS CL TO CL

14.71% fill

AUXILIARY BLDG U-2

RACEWAY ISOMETRIC
DWG. ELE. 757 · CONS. @ 2PS 704E

WATTS BAR NUCLEAR PLANT
TVA/OC

ENGINEER: M. Cook | DATE: 8/25/85

VERIFICATION: J. W. Howe

APPROVED: [signature]

PROJECT NO: N/A EEB-EP22.29 SAMPLE PROGRAM

OR & QA SIGNATURES INDICATE ACCEPTANCE TO WORSE CASE CRITERIA

OR: | QA: [signature]

CONDUIT NO. 2PS-704E (4 cables) SHEET 1 OF 3

$K = .3$, $D/d = 1.61/.309 = 5.21$

$W_t = 4 \times .07 = .28$, $W_c = 1.06$

$K \cdot W_{ck} = 1.06 \times .3 = .318$

COMPUTED RHA DATE 8-30-85

CHECKED JRB DATE 9-4-85

PULL A to L

T_1 Horiz. Straight $T = K L W_t = .318 \times \left(1 + \frac{10}{12}\right) \times .28$
$= .16\#$

T_2 Vertical Bend (25°) $T = T_1 e^{Kb} = .16\, e^{.318 \times .44} = .16 \times 1.15$
$= .19\#$

T_3 Down Ramp (25°) $T = L W_t (K \cos\alpha - \sin\alpha) + T_2$
$= 2.5 \times .28 (.318 \cos 25° - \sin 25°) + .19$
$= .09\#$

T_4 Vertical Bend (-5°) $T = T_3 e^{Kb} = .09\, e^{.318 \times .44} = .09 \times 1.15$
$= .11\#$

T_5 Horiz. Straight $T = K L W_t + T_4 = .318 \times \left(2 + \frac{5}{12}\right) \times .28 + .11$
$= .32\#$

T_6 Vertical Bend (5°) $T = T_5 e^{Kb} = .32\, e^{.318 \times .09} = .32 \times 1.03$
$= .33\#$

T_7 Up Ramp (5°) $T = L W_t (\sin\alpha + K \cos\alpha) + T_6$
$= \left(\frac{5.5}{12}\right) \times .28 (\sin 5° + .318 \cos 5°) + .33$
$= .46\#$

T_8 Vertical Bend (5°) $T = T_7 e^{Kb} = .46\, e^{.318 \times .09} = .46 \times 1.03$
$= .47\#$

T_9 Horiz. Straight $T = K L W_t + T_8 = .318 \times \left(9 + \frac{5.5}{12}\right) \times .28 + .47$
$= 1.31\#$

T_{10} Vertical Bend (30°) $T = T_9 e^{Kb} = 1.31\, e^{.318 \times \pi/6} = 1.31 \times 1.18$
$= 1.55\#$

T_{11} Up Ramp (30°) $T = L W_t (\sin\alpha + K \cos\alpha) + T_{10}$
$= \left(\frac{13}{12}\right) \times .28 (\sin 30° + .318 \cos 30°) + 1.55$
$= 1.79\#$

TVA 11080 (WM 7-73)

COMPUTED RHB DATE 8-30-85
CHECKED JRB DATE 9-6-85

T_{12} Vertical Bend (30°) $T = T_{11} e^{\mu b} = 1.79 e^{.318 \pi/6} = 1.79 \times 1.18$
$= 2.11$ #

T_{13} Horiz. Straight $T = \mu L W_t + T_{12} = .318 \times (9 + \frac{3}{12}) \times .28 + 2.11$ #
$= 2.93$

T_{14} Vertical Bend (30°) $T = T_{13} e^{\mu b} = 2.93 e^{.318 \pi/6} = 2.93 \times 1.18$
$= 3.46$

T_{15} Up Ramp (30°) $T = L W_t (\sin \alpha + \mu \cos \alpha) + T_{14}$
$= \frac{19.5}{12} \times .28 (\sin 30° + .318 \cos 30°) + 3.46$
$= 3.63$ #

T_{16} Vertical Bend (30°) $T = T_{15} e^{\mu b} = 3.63 e^{.318 \pi/6} = 3.63 \times 1.18$
$= 4.29$ #

T_{17} Horiz. Straight $T = \mu L W_t + T_{16} = .318 \times 5.5 \times .28 + 4.29$
$= 4.78$ #

T_{18} Vertical Bend (35°) $T = T_{17} e^{\mu b} = 4.78 e^{.318 \times .61} = 4.78 \times 1.21$
$= 5.80$ #

T_{19} Down Ramp (53°) $T = L W_t (\mu \cos \alpha - \sin \alpha) + T_{18}$
$= 4 \times .28 (.318 \cos 53° - \sin 53°) + 5.80$
$= 5.12$ #

T_{20} Vertical Bend (35°) $T = T_{19} e^{\mu b} = 5.12 e^{.318 \times .61} = 5.12 \times 1.21$
$= 6.22$ #

T_{21} Horiz. Straight $T = \mu L W_t + T_{20} = .318 \times 17 \times .28 + 6.22$
$= 7.73$ #

T_{22} Horiz. Bend (27°) $T = T_{21} e^{\mu b} = 7.73 e^{.318 \times .47} = 7.73 \times 1.16$
$= 8.98$ #

T_{23} Horiz. Straight $T = \mu L W_t + T_{22} = .318 \times 3 \times .28 + 8.98$
$= 9.25$ #

TVA 11030 (WM 7-75)

COMPUTED RHZ DATE 8-30-85
CHECKED JRB DATE 9-4-85

T_{24} Vertical Bend (90°) $T = T_{23}\, e^{\mu\alpha} = 9.25\, e^{.318\,\pi/2} = 9.25 \times 1.65$
$= 15.24\#$

T_{25} Vertical Straight (Down) $T = T_{24} - LW_t = 15.24 - 6.75 \times .28$
$= 13.35\#$

T_{26} Vertical Bend (30°) $T = T_{25}\, e^{\mu\alpha} = 13.35\, e^{.318\,\pi/6} = 13.35 \times 1.18$
$= 15.77\#$

T_{27} Down Lamp (60°) $T = LW_t\,(k\cos\alpha - \sin\alpha) + T_{26}$
$= (1 + \frac{3.5}{12}) \times .28\,(.318\cos 60° - \sin 60°) + 15.77$
$= 15.38\#$

T_{28} Vertical Bend (30°) $T = T_{27}\, e^{\mu\alpha} = 15.38\, e^{.318\,\pi/6} = 15.38 \times 1.18$
$= 18.17\#$

T_{29} Vertical Straight (Down) $T = T_{28} - LW_t = 18.17 - (1 + \frac{3.5}{12}) \times .28$
$= 17.81\#$

$$SWP_{AB} = (W_c - 1)\, T_{28}/R = \frac{(1.06 - 1) \times 18.17}{.62}$$

$$\boxed{SWP_{AC} \quad 1.76\ \#/ft}$$

Since this SWP result is so low + insignificant, + the pull from B to A and pulls between points B, C, and D also seem to be insignificant, then further calculations are inappropriate for this conduit!

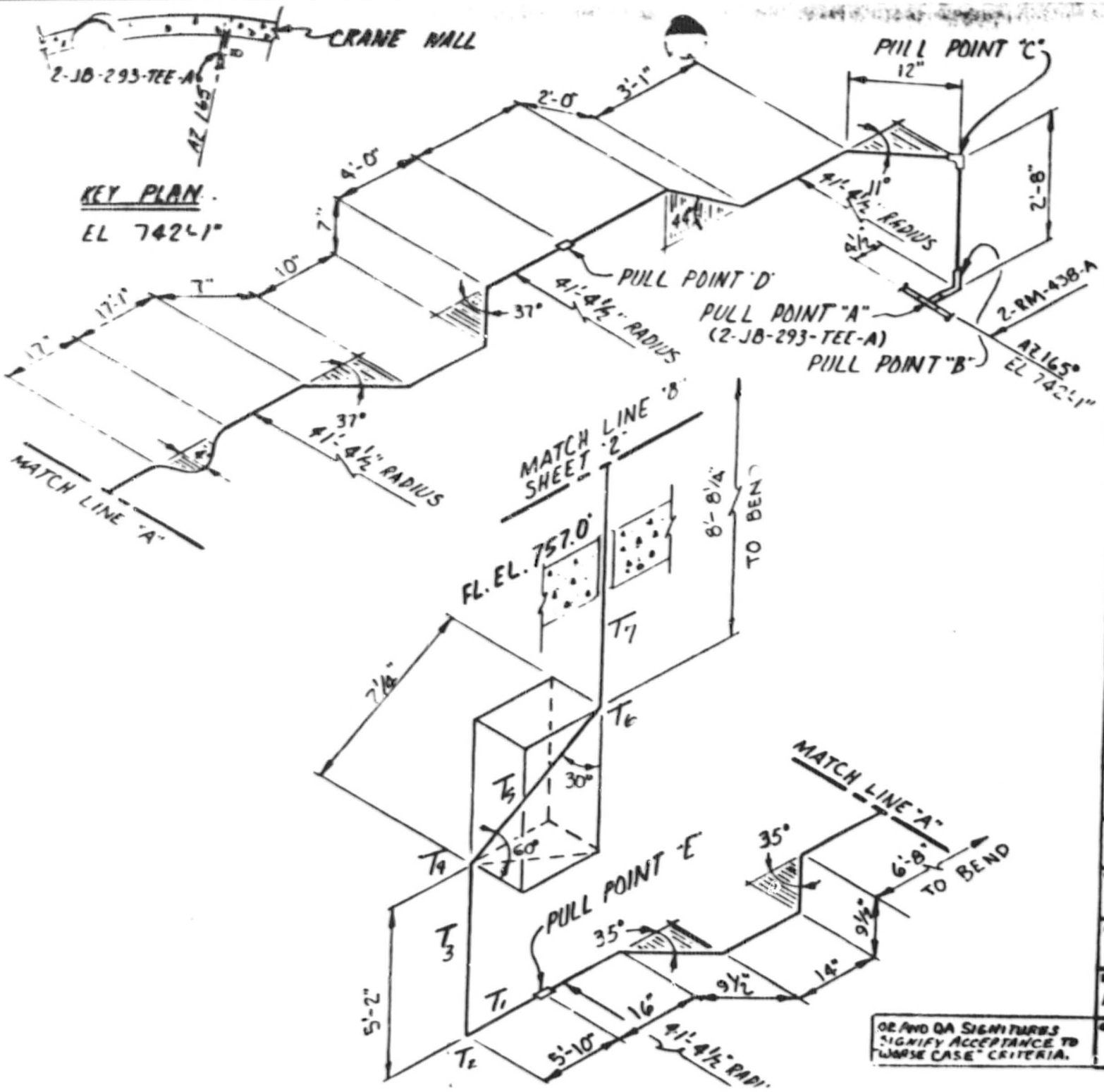

SHEET 1 OF 2

NOTES:

1. ALL BENDS HAVE A RADIUS OF 8¼" UNLESS OTHERWISE NOTED. (1½" I CONDUIT)
2. TOLERANCES AS SPECIFIED BY EP 22.29.
3. ALL BENDS NOT SPECIFIED ARE 90°
4.

CABLE UNID	MANU-FACTURER
2RM441A	Rates
2RM443A	↓

5. REF. DWGS:
45W876-1,-2,-4
45W874-1,-2
45W872-4
6. ALL DIMENSIONS a to a

REACTOR BLDG UNIT 2

RACEWAY ISOMETRIC CONDUIT # 2RM438A

WATTS BAR NUCLEAR PLANT
TVA/OC

ENGINEER: Roger A. Brown
DATE: 8-27-85

VERIFICATION: J. W. Hane

APPROVED: [signature]

PROCEDURE NO: N/A EEB EP 22.29 SAMPLE PROGRAM

OR AND QA SIGNITURES SIGNIFY ACCEPTANCE TO "WORSE CASE" CRITERIA.

OR: QA:

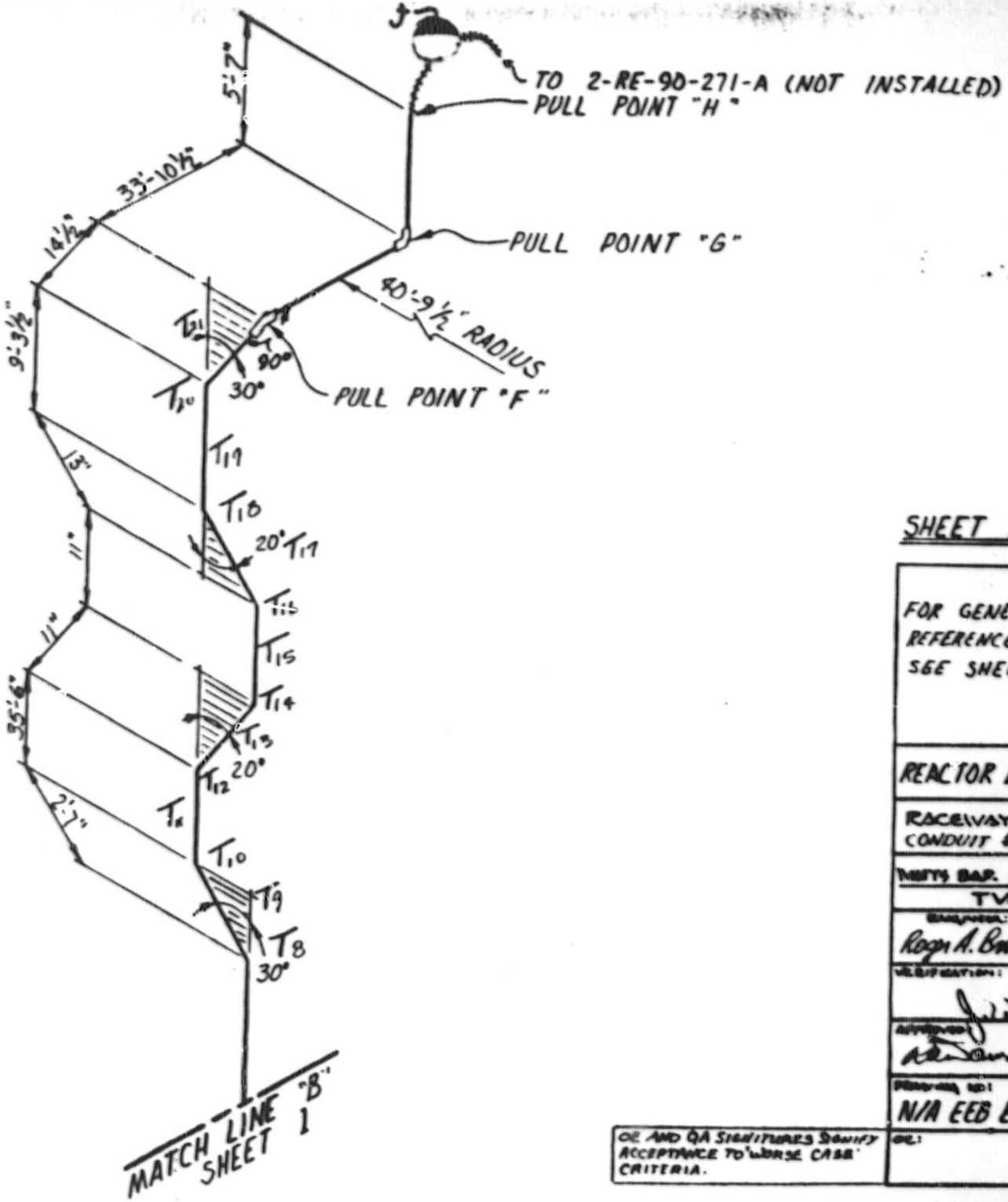

SHEET 2 OF 2

FOR GENERAL NOTES & REFERENCE DRAWINGS SEE SHEET 1.

REACTOR BLDG UNIT 2

RACEWAY ISOMETRIC CONDUIT # 2RM438A

WATTS BAR NUCLEAR PLANT
TVA/OC

ENGINEER:	DATE:
Roger A. Brown	3-27-85

VERIFICATION:

APPROVED:

DRAWING NO: N/A EEB EP 22.29 SAMPLE PROGRAM

OE AND QA SIGNATURES SIGNIFY ACCEPTANCE TO "WORSE CASE" CRITERIA.

OE:	QA:

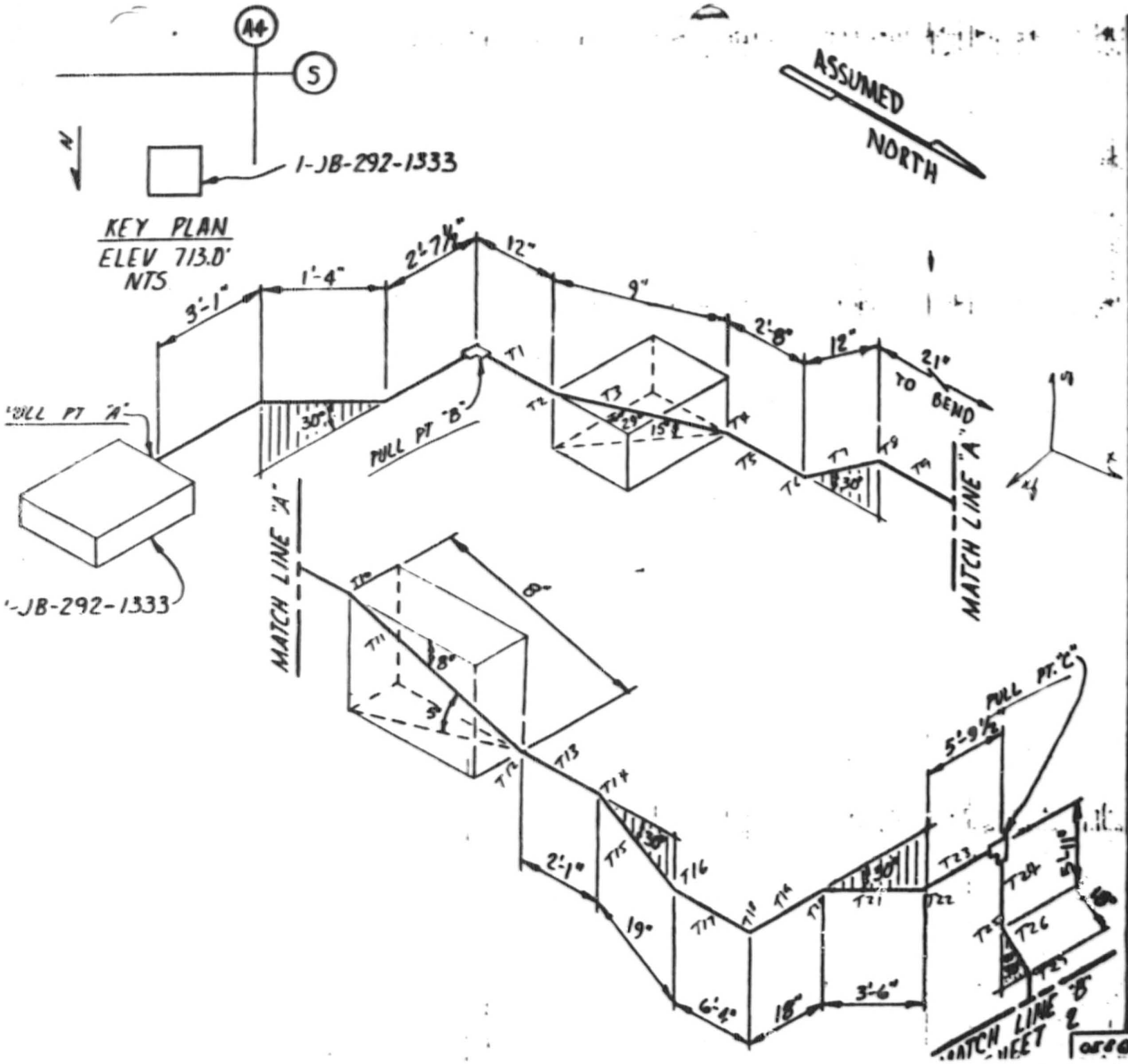

NOTES:

1. ALL BENDS HAVE A RADIUS OF 5¾" UNLESS OTHERWISE NOTED. (1" ØI CONDUIT)
2. TOLERANCES AS SPECIFIED BY EP 22.29
3. ALL BENDS NOT SPECIFIED ARE 90°
4. CABLE UNID | MANUFACTURER
   1PM3877E | Rotor
5. REF. DWG. # 45N824-1, -7, 45N822-6, -11, 15W810-21, -30
6. ALL DIMENSIONS a.b.c.

AUX. BLDG / YARD UNIT 1

RACEWAY ISOMETRIC
DWG. ELE. 713.0 and 1PLC62E

WATTS BAR NUCLEAR PLANT
TVA/OC

Roger A. Brown | 9-3-85

N/A EEB EP 22.29 SAMPLE PROGRAM

T.W. Bryan 2/4/85

OE & QA SIGNATURES INDICATE ACCEPTANCE

1PLC 62E

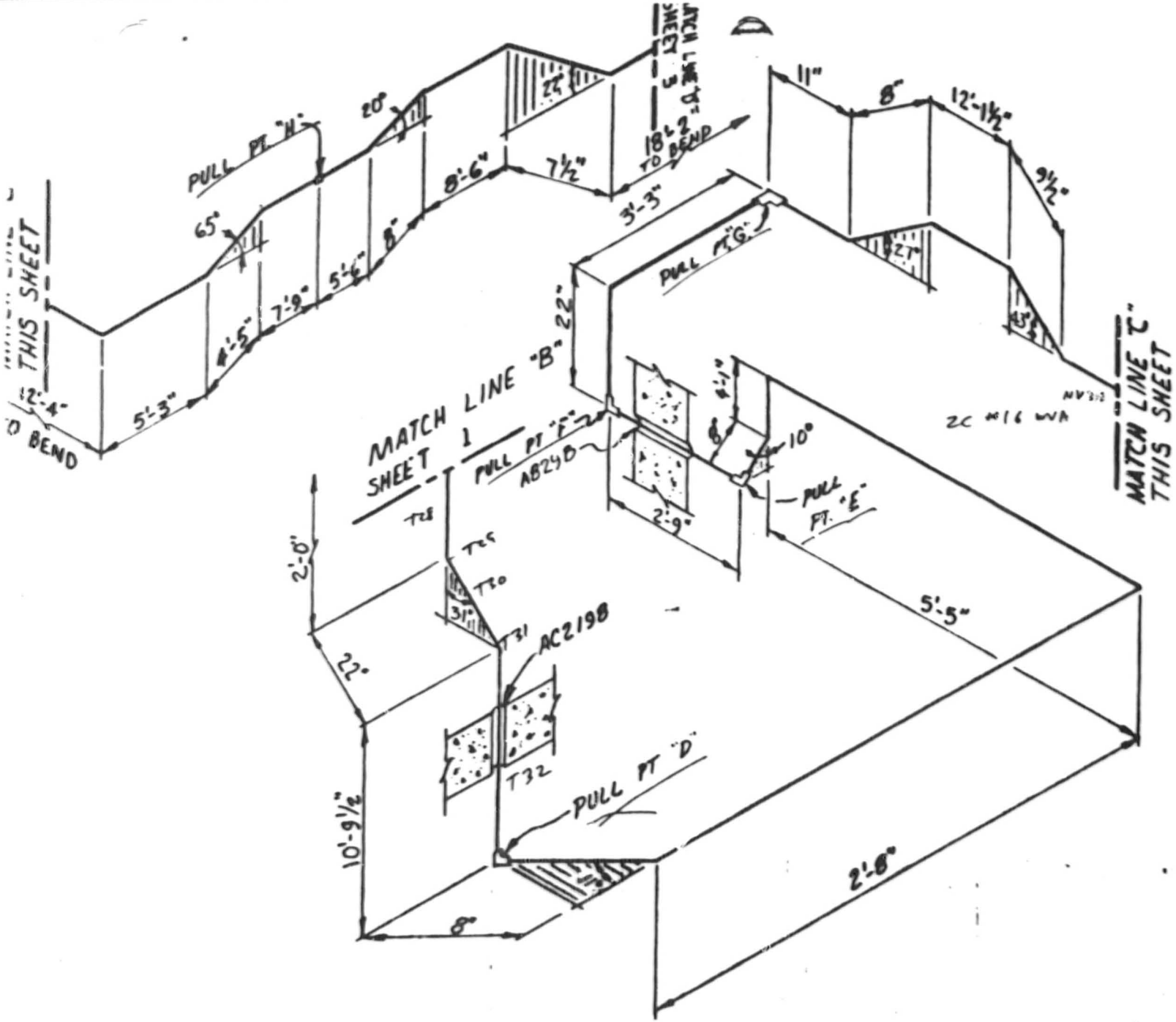

NOTES:

1. ALL BENDS HAVE A RADIUS OF 5¾" UNLESS OTHERWISE NOTED. (1" Ø I CONDUIT)
2. TOLERANCES AS SPECIFIED BY EP 22.29
3. ALL BENDS NOT SPECIFIED ARE 90°
4.

CABLE UNID	MANU-FACTURER
1PM3877E	Rolls

5. REF. DWG. # 4SN824-1, -7, 4SN822-6, -11, 1SW810-2, -30
6. ALL DIMENSIONS a & a

AUX. BLDG. / YARD UNIT 1

RACEWAY ISOMETRIC DWG. ELE. 713.0 COND. # 1PLC62E

WATTS BAR NUCLEAR PLANT TVA/OC

Roger A. Brown 9-8-85

J.W. Nave

N/A EEB EP 22.29 SEISMIC PROGRAM

QE & QA SIGNATURES INDICATE ACCEPTANCE TO "WORST CASE" CRITERIA.

9/9/85 G.W. Rogers

SHEET 2 OF 3

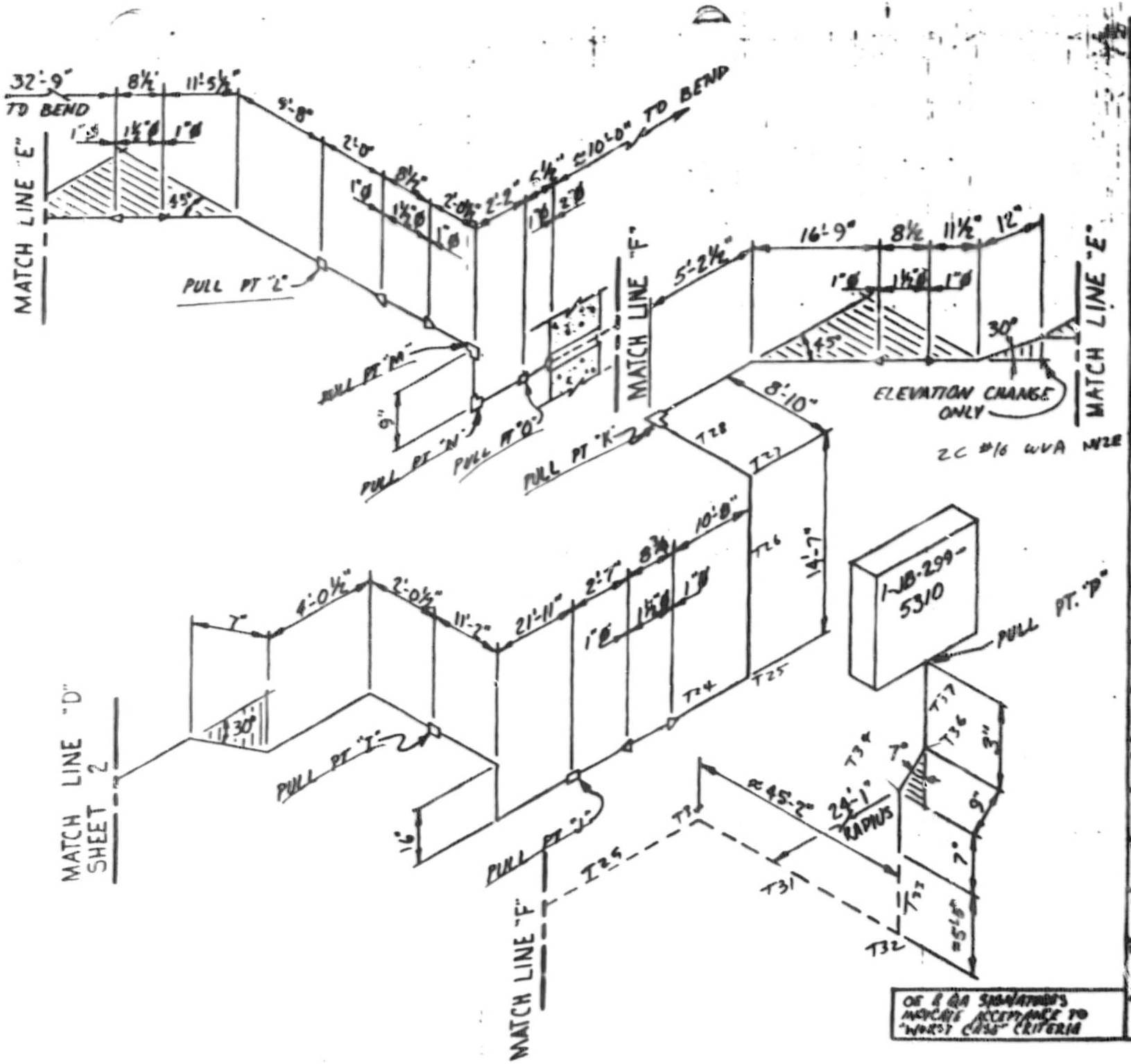

NOTES:

1. ALL BENDS HAVE A RADIUS OF 5¾" UNLESS OTHERWISE NOTED. (1" ø I CONDUIT)
2. TOLERANCES AS SPECIFIED BY EP 22.29
3. ALL BENDS NOT SPECIFIED ARE 90°
4. CABLE UNED | MANUFACTURER

CABLE UNED	MANUFACTURER
1PM3877E	[illegible]

5 --- INDICATES EMBEDDED CONDUIT.
6 REF. DWG. # 45N[illegible]-1, -7, 45N[illegible]-6, -11, 15N[illegible]-21, -30
7 ALL DIMENSIONS [illegible]

AUX. BLDG. / YARD UNIT 1

RACEWAY ISOMETRIC
[illegible]

WATTS BAR NUCLEAR PLANT
TVA/DC

Roger A. [illegible] | 9-3-85

[illegible]

[illegible]

[illegible] EEB EP 22.29 SAMPLE PROGRAM

OE & QA SIGNATURES INDICATE ACCEPTANCE TO "WORST CASE" CRITERIA

[illegible] | 9/4/85 | A. W. [illegible]

SHEET 3 OF 3

TVA 488 (EN DES 3-77)

CONDUIT 1PLC62E NV2E

SHEET 1 OF 4

D/d = 1.05/.387 = 2.71

w_t = .075

K = 0.3

COMPUTED KTS DATE 9-11-85

CHECKED JRB DATE 9-15-85

T_1 Horizontal 12" $T = (1)(.075)(.3) = .02$

T_2 Bend 29° $T = 0.02\, e^{(0.3)(.51)} = .03$

T_3 Straight run 9 slope down 15° $T = (\frac{9}{12})(.075)(.3\cos 15° - \sin 15°) + .03$
$T = .03$

T_4 Bend 29° $T = .03\, e^{(0.3)(.51)} = .03$

T_5 Horizontal 2'-8" $T = (2.67)(.075)(0.3) + .03 = .09$

T_6 Bend 30° $T = .09\, e^{(.3)(.52)} = .11$

T_7 Straight run 12" up 30° $T = .11 + (1)(.075)(.3\cos 30° + \sin 30°)$
$T = .17$

T_8 Bend 30° $T = .17\, e^{(.30)(.52)} = .19$

T_9 Horizontal 21" $T = .19 + (\frac{21}{12})(.075)(.3)$
$T = .23$

T_{10} Bend 8° $T = .23\, e^{(.14)(.30)} = .24$

T_{11} Straight run 8" slope down 5° $T = .24 + (\frac{8}{12})(.075)(.3\cos 5° - \sin 5°)$
$T = .25$

T_{12} Bend 8° $T = .25\, e^{(.14)(.30)} = .26$

T_{13} Horizontal 2'-1" $T = .26 + (2.08)(.075)(.3) =$
$T = .31$

IPLC62E

COMPUTED 2 DATE 9-11-85
CHECKED JRB DATE 9-15-85

T_{10} Bend 30° $T = .31e^{(.20)(.52)} = .36$

T_{10} Straight run 19" slope down 30° $T = .36 + (\frac{19}{12})(.075)(.3\cos 30 - \sin 30)$
$T = .34$

T_{11} Bend 30° $T = .34e^{(.10)(.54)} = .39$

T_{12} Horizontal 6'-4" $T = .39 + (6.33)(.075)(.3)$
$T = .53$

T_{13} Bend 90° $T = .53e^{(.3)(1.57)} = .86$

T_{14} Horizontal 18" $T = .86 + (\frac{18}{12})(.075)(.3)$
$T = .89$

T_{20} Bend 30° $T = .89e^{(.3)(.52)} = 1.04$

T_{21} Straight run 3'-6" slope down 30° $T = 1.04 + (3.5)(.075)(.3\cos 30° - \sin 30°)$
$T = .98$

T_{22} Bend 30° $T = .98e^{(.3)(.52)} = 1.15$

T_{22} Horizontal 5'-9½" $T = 1.15 + (5.79)(.075)(.3)$
$T = 1.28$

$SWP = \frac{1.15}{.435} = 2.64$

TVA 468 (EN DES 3-77)

IPLC62E

COMPUTED KTS DATE 9-11-85
CHECKED JRB DATE 9-15-85

pull D to E

T_{32} Vertical 10'-9½" up $T = (10.79)(.075)$
$T = .81$

T_{31} Bend 31° $T = .81\, e^{(.3)(.52)} = .95$

T_{30} Straight run 22" slope up 59° $T = .95 + (\frac{22}{12})(.075)(.3\cos 59° + \sin 59°)$
$T = 1.09$

T_{29} Bend 31° $T = 1.09\, e^{(.3)(.52)} = 1.28$

T_{28} Vertical 2'-0" up $T = 1.28 + (2)(.075) = 1.43$

T_{27} Bend 30° $T = 1.43\, e^{(.3)(.52)} = 1.67$

T_{26} Straight run 18" up 60° $T = 1.67 + (1.5)(.075)(.3\cos 60° + \sin 60°)$
$T = 1.78$

T_{25} Bend 30° $T = 1.78\, e^{(.3)(.52)}$
$T = 2.08$

T_{24} Vertical 5'-11" up $T = 2.08 + (5.92)(.075)$
$T = 2.52$

$SWP = \frac{2.08}{.435} = 4.78$

TVA 488 (EN DES-3 77)

IPLC 62E

COMPUTED KTS DATE 9-11-85

CHECKED JRB DATE 9-15-85

pull J → K

T_{24} Horizontal 13'-11¾" $T = 13.98 \times .075 \times .3 = .31$

T_{25} Bend 90° $T = .31 e^{(1.57)(.3)} = .50$

T_{26} Vertical 14'-7" up $T = .50 + (14.58)(.075) = 1.59$

T_{27} Bend 90° $T = 1.59 e^{(1.57)(.3)} = 2.55$

T_{28} Horizontal 8'-10" $T = 2.55 + (8.83)(.075)(.3) =$
$T = 2.75$

$SWP = \frac{2.55}{.435} = 5.86$

pull O → P

T_{29} Horizontal 10'-6½" $T = 10.54 \times .075 \times .3$
$T = .24$

T_{30} Bend 90° $T = .24 e^{(.3)(1.57)} = .38$

T_{31} Horizontal 45'-2" $T = .38 + (45.17)(.075)(.3) = 1.40$

T_{32} Bend 90° $T = 1.40 e^{(1.57)(.3)} = 2.24$

T_{33} Vertical 5'-7" $T = 2.24 + (5.58)(.075) = 2.66$

T_{34} Bend 7° $T = 2.66 e^{(.3)(.12)} = 2.75$

T_{35} Straight run 4" up 83° $T = 2.75 + (\frac{4}{12})(.075)(.3 \cos 83° + \sin 83°)$
$T = 2.81$

T_{36} Bend 7° $T = 2.81 e^{(.3)(.12)} = 2.92$

T_{37} Vertical 3" up $T = 2.92 + (.25)(.075) = 2.94$

$SWP = \frac{2.92}{.435} = 6.71$

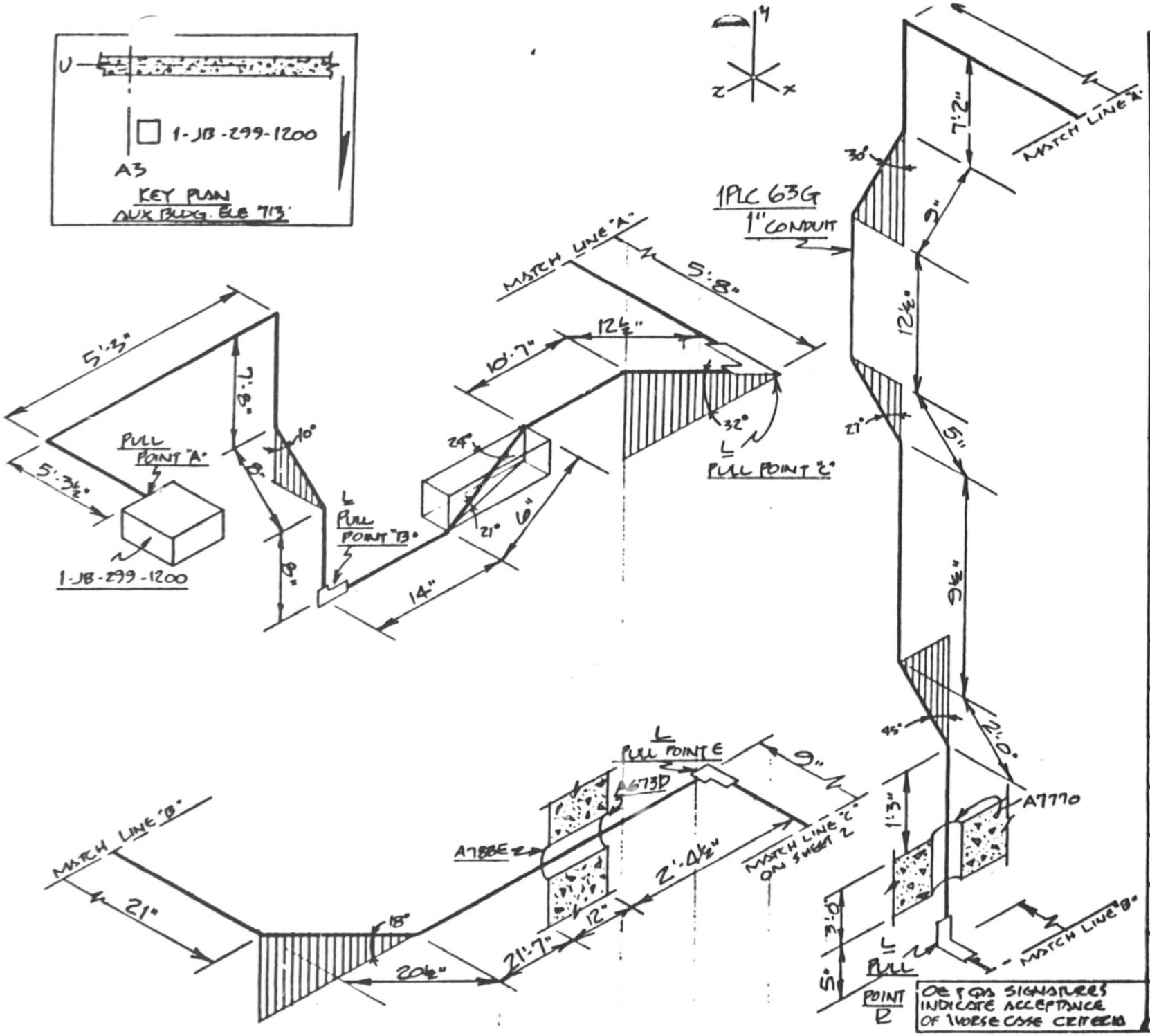

NOTES:

1. ALL BENDS HAVE A RADIUS OF 5¾" UNLESS OTHERWISE NOTED. (1I)" CONDUIT
2. TOLERANCES AS SPECIFIED BY EP-22.29
3. ALL BENDS NOT SPECIFIED ARE 90°
4.

CABLE UNID	MANU-FACTURER
1PM3887G	LATER

5. REF. DWG # 45N824-2,3 45N822-6,8/15W810-30-21 15W824-28
6. ALL DIMENSIONS CL TO CL

AUXILIARY BLDG. U1

RACEWAY ISOMETRIC
DWG. ELE. 713 COND. # 1PLC 63G

WATTS BAR NUCLEAR PLANT
TVA/OC

ENGINEER: Roger A. Brown
DATE: 9-9-85

VERIFICATION: [signature]

APPROVED: [signature]

DRAWING NO: E1PLC63G S.P. R.0

OE & QA SIGNATURES INDICATE ACCEPTANCE OF WORSE CASE CRITERIA

OE: [signature]
QA: [signature] 9/9/85

SHEET 1 OF 2

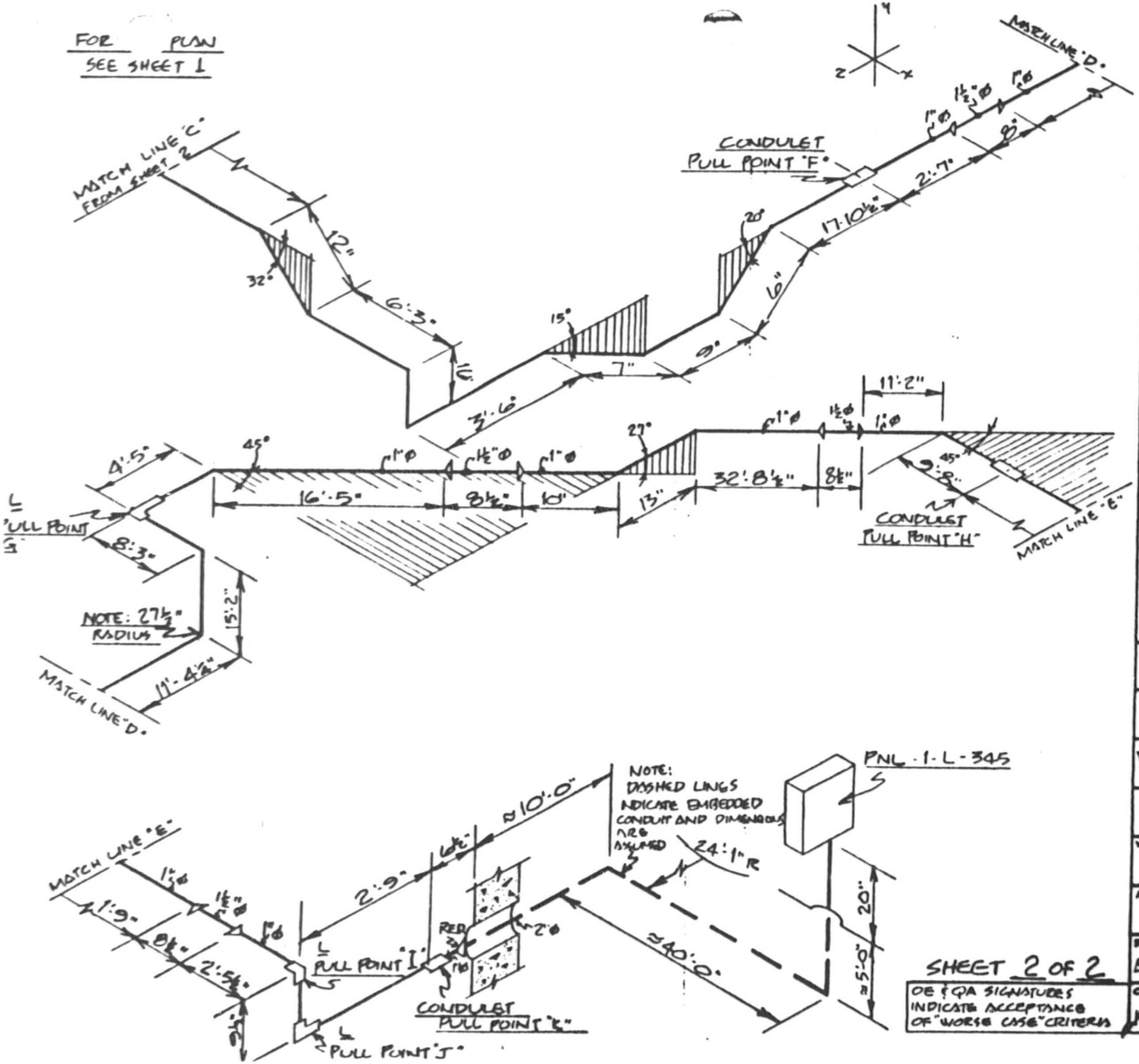

NOTES:

1. ALL BENDS HAVE A RADIUS OF 5¾" UNLESS OTHERWISE NOTED. (1I) CONDUIT
2. TOLERANCES AS SPECIFIED BY EP 22.29
3. ALL BENDS NOT SPECIFIED ARE 90°
4.

CABLE UNID	MANUFACTURER
1PM3887G	LATER

5. REF. DWG # 45N824-2,3 45N822-6,8/ 151V810-30,21 151V824-28
6. ALL DIMENSIONS CL TO CL

AUXILIARY BLDG U1

RACEWAY ISOMETRIC
DWG. ELE. 713 COND. # 1PLC63G

WATTS BAR NUCLEAR PLANT
TVA/OC

ENGINEER: Roger A. Brown DATE: 9-9-85

VERIFICATION: J W [illegible]

APPROVED: [illegible]

DRAWING NO: E1PLC63G S.P. R.0

SHEET 2 OF 2

OE & QA SIGNATURES INDICATE ACCEPTANCE OF "WORSE CASE" CRITERIA

OE: J.A. Bullard QA: G.W. Rogers 9/9/85

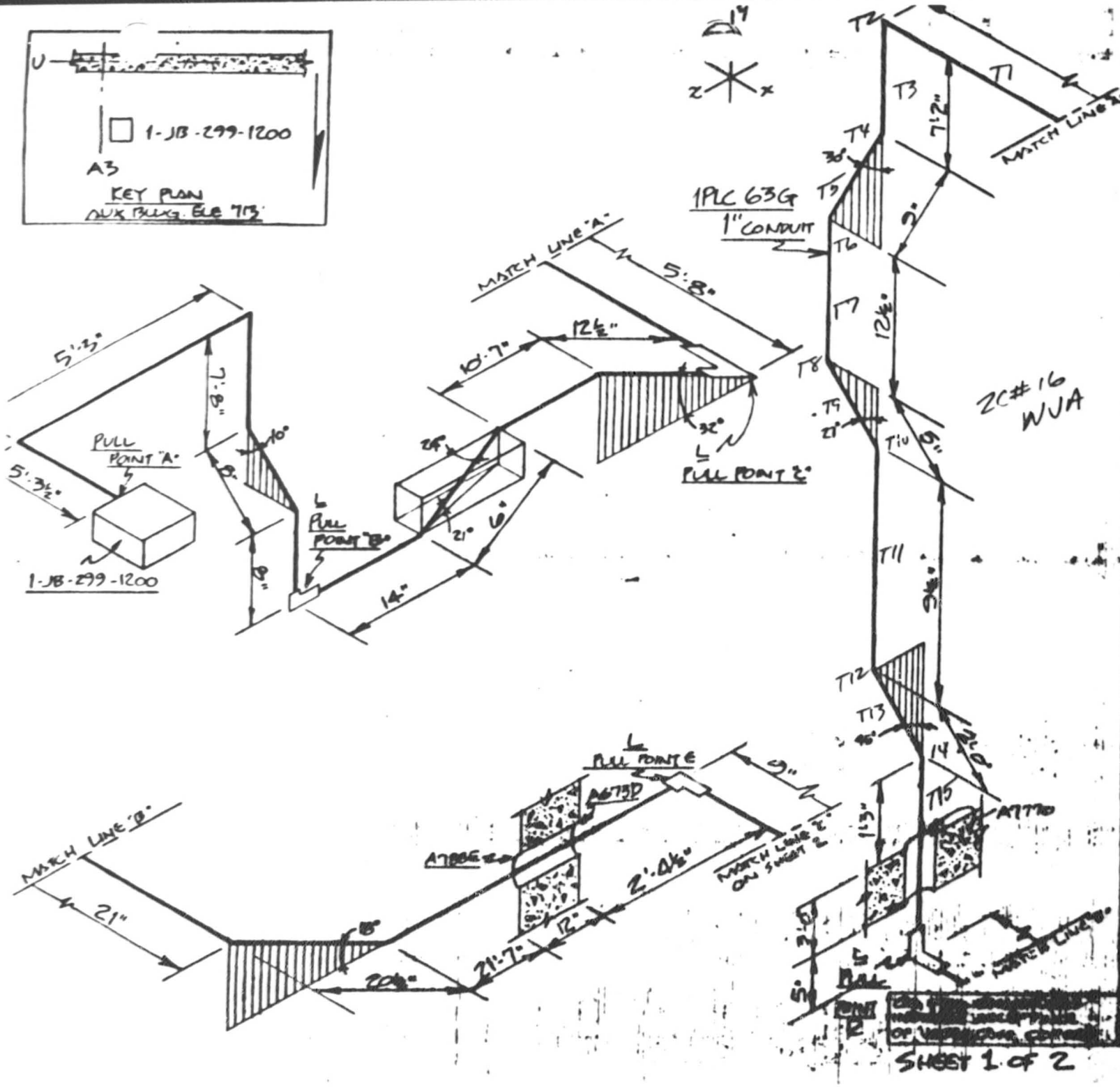

NOTES:

1. ALL BENDS HAVE A RADIUS OF 5¾" UNLESS OTHERWISE NOTED. (1I)" CONDUIT
2. TOLERANCES AS SPECIFIED BY EP 22.29
3. ALL BENDS NOT SPECIFIED ARE 90°
4.

CABLE UNID	MANU-FACTURER
1PM3887G	LATER

5. ALL DIMENSIONS a.s.a.

AUXILIARY BLDG. U1

RACEWAY ISOMETRIC
DWG. ELE. 713 [illegible] 1PLC 63G

[illegible]

[illegible] 8-2-85

[illegible] 22.29

SHEET 1 OF 2

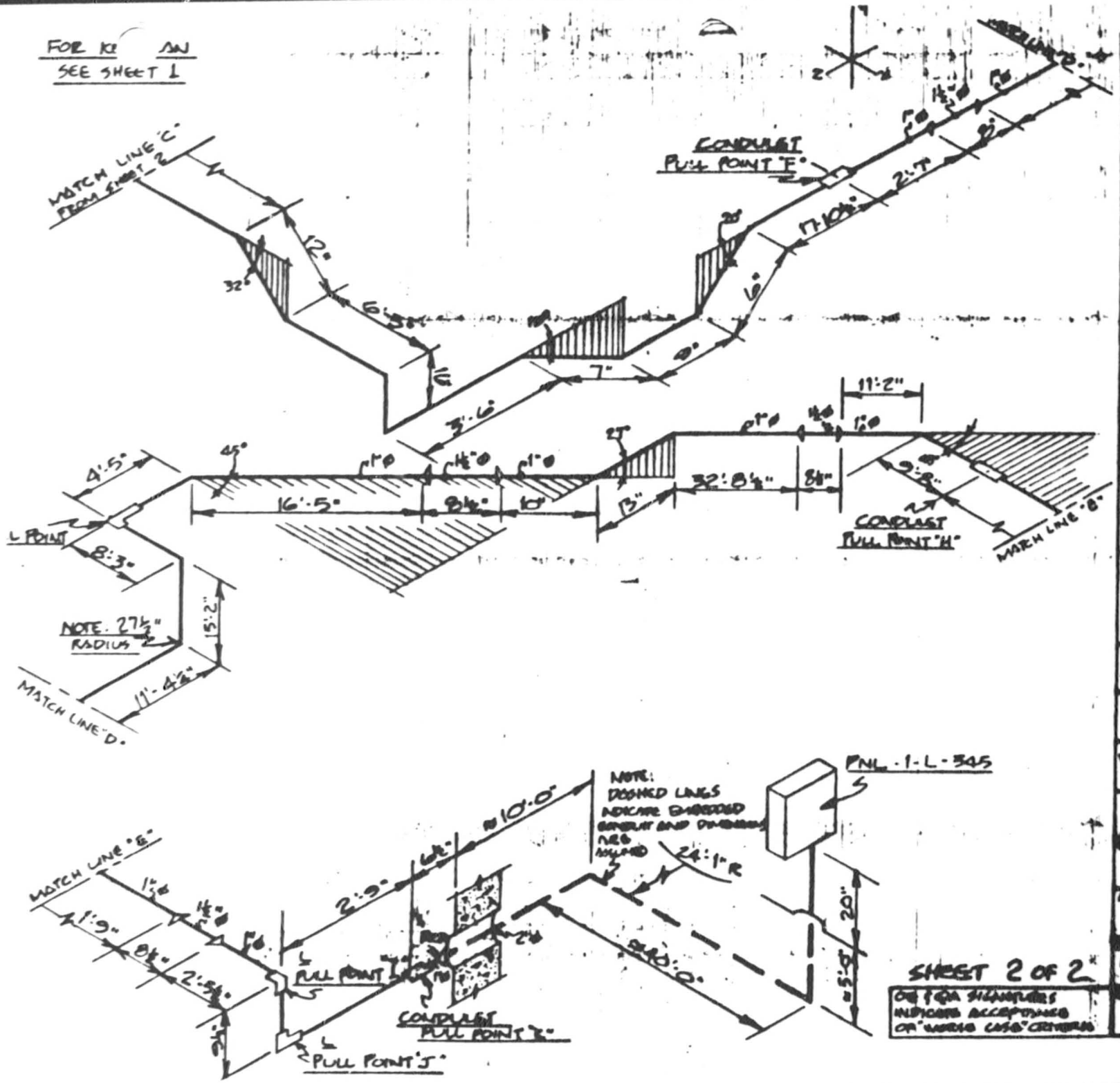

NOTES:

1. ALL BENDS HAVE A RADIUS OF 5¾" UNLESS OTHERWISE NOTED. (1I) "CONDUIT
2. TOLERANCES AS SPECIFIED BY EP 22.29
3. ALL BENDS NOT SPECIFIED ARE 90°
4.

CABLE UNID	MANUFACTURER
1PM3887G	LATER

5. REF. DWG. # 45N822-2,3 45N822-6,8/15W810-30,21 15W824-26
6. ALL DIMENSIONS [illegible]

AUXILIARY BLDG U1

RACEWAY ISOMETRIC
DWG. ELE. 713 [illegible]

[illegible]
TVA/OE

Roger A. [illegible] 9-9-85

[illegible]

NA [illegible] EP 22.29 SAMPLE PROGRAM

SHEET 2 OF 2

OE & QA SIGNATURES INDICATE ACCEPTANCE OF "WORSE CASE" CRITERIA

TVA 488 (EN DES 3-77)

CONDUIT 1PLC63G NV2G

SHEET 1 OF 1

$K = 0.3$ $\mu_t = .075$

COMPUTED KTS DATE 9-12-85

CHECKED JRB DATE 9-15-85

pull D → C

T_{15}	Vertical 4'-8"	$T = (4.67)(.075) = .35$
T_{14}	Bend 45°	$T = .35e^{(.3)(.79)} = .44$
T_{13}	Straight run 2'-0" up 45°	$T = .44 + (2)(.075)(.3\cos 45° + \sin 45°)$ $T = .58$
T_{12}	Bend 45°	$T = .58e^{(.3)(.79)} = .74$
T_{11}	Vertical 5½"	$T = .74 + (.79)(.075) = .79$
T_{10}	Bend 27°	$T = .79e^{(.47)(.3)} = .92$
T_9	Straight run 5" up 63°	$T = .92 + (\frac{5}{12})(.075)(.3\cos 63° + \sin 63°)$ $T = .95$
T_8	Bend 27°	$T = .95e^{(.47)(.3)} = 1.09$
T_7	Vertical 12½"	$T = 1.09 + (1.04)(.075) = 1.17$
T_6	Bend 30°	$T = 1.17e^{(.3)(.52)} = 1.37$
T_5	Straight run 9" slope up 60°	$T = 1.37 + (\frac{9}{12})(.075)(.3\cos 60 + \sin 60)$ $T = 1.43$
T_4	Bend 30°	$T = 1.37e^{(.3)(.52)} = 1.67$
T_3	Vertical 7'-2"	$T = 1.67 + (7.17)(.075) = 2.21$
T_2	Bend 90°	$T = 2.21e^{(1.57)(.3)} = 3.53$
T_1	Horizontal 5'-8"	$T = 3.53 + (5.67)(.075)(.3)$ $T = 3.66$

$$SWP = \frac{3.53}{.435} = 8.11$$

SHEET 1 OF 2

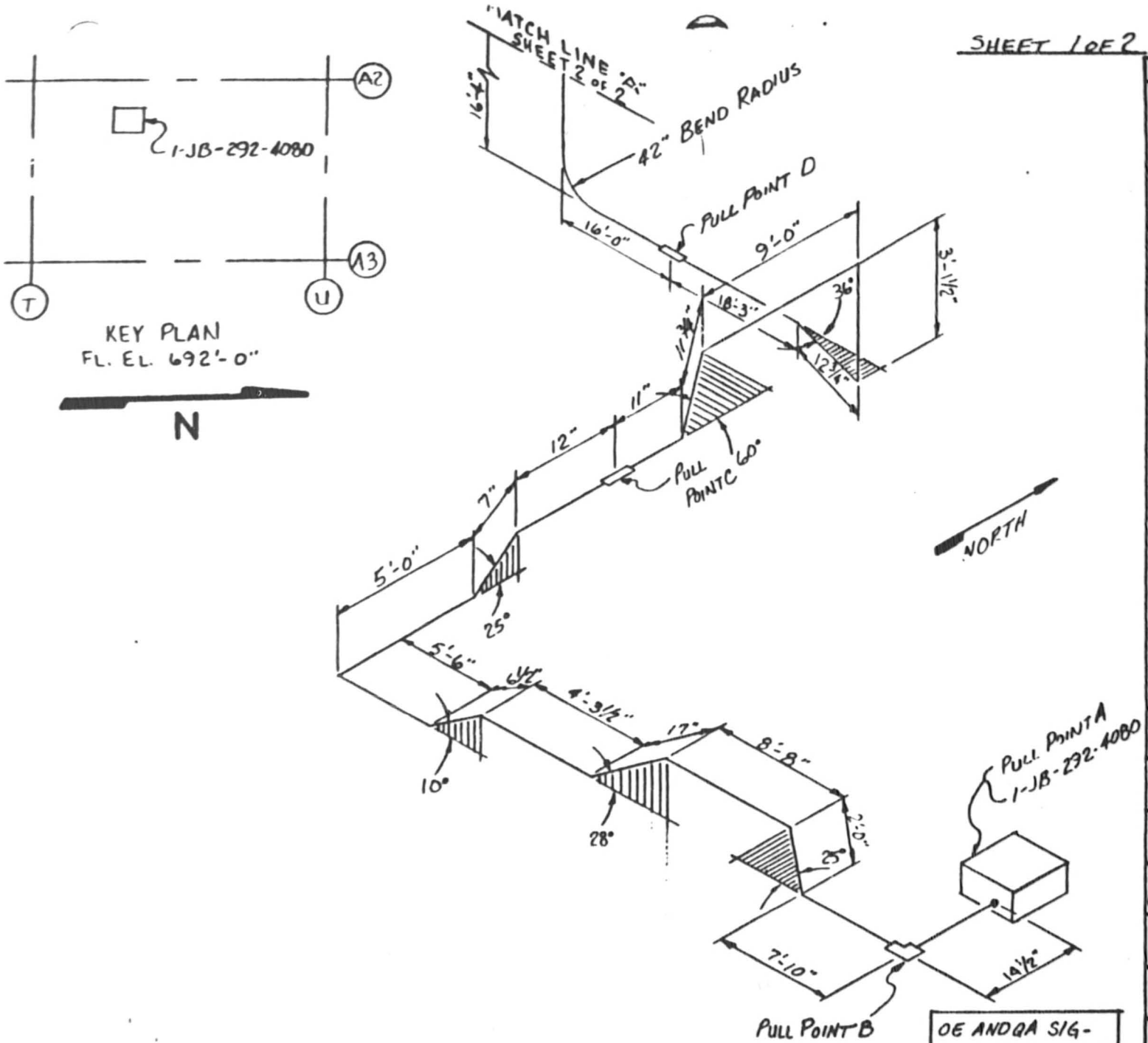

OE AND QA SIGNATURES INDICATE ACCEPTANCE OF "WORSE CASE" CRITERIA

NOTES:

1. ALL BENDS HAVE A RADIUS OF 5.75" UNLESS OTHERWISE NOTED. (1")
2. TOLERANCES AS SPECIFIED BY EP 22.29
3. ALL BENDS NOT SPECIFIED ARE 90°
4.

CABLE UNID	MANUFACTURER
1PM2445B	LATER

5. REF. DWG # 45N822-6
6. ALL DIMENSIONS CL TO CL

AUX. BLDG. - UNIT 1

RACEWAY ISOMETRIC DWG. ELE. 692 COND. #1PLC82B

WATTS BAR NUCLEAR PLANT

TVA/OC

ENGINEER: Charles L. Colvin — DATE: 9-6-85

VERIFICATION: W. D. Perkins 9-6-85

APPROVED: [signature]

DRAWING NO: E-1PLC82/B S.P. — R.0

OE: J.A. Bullard — QA: G.W. Bogan 9/4/85

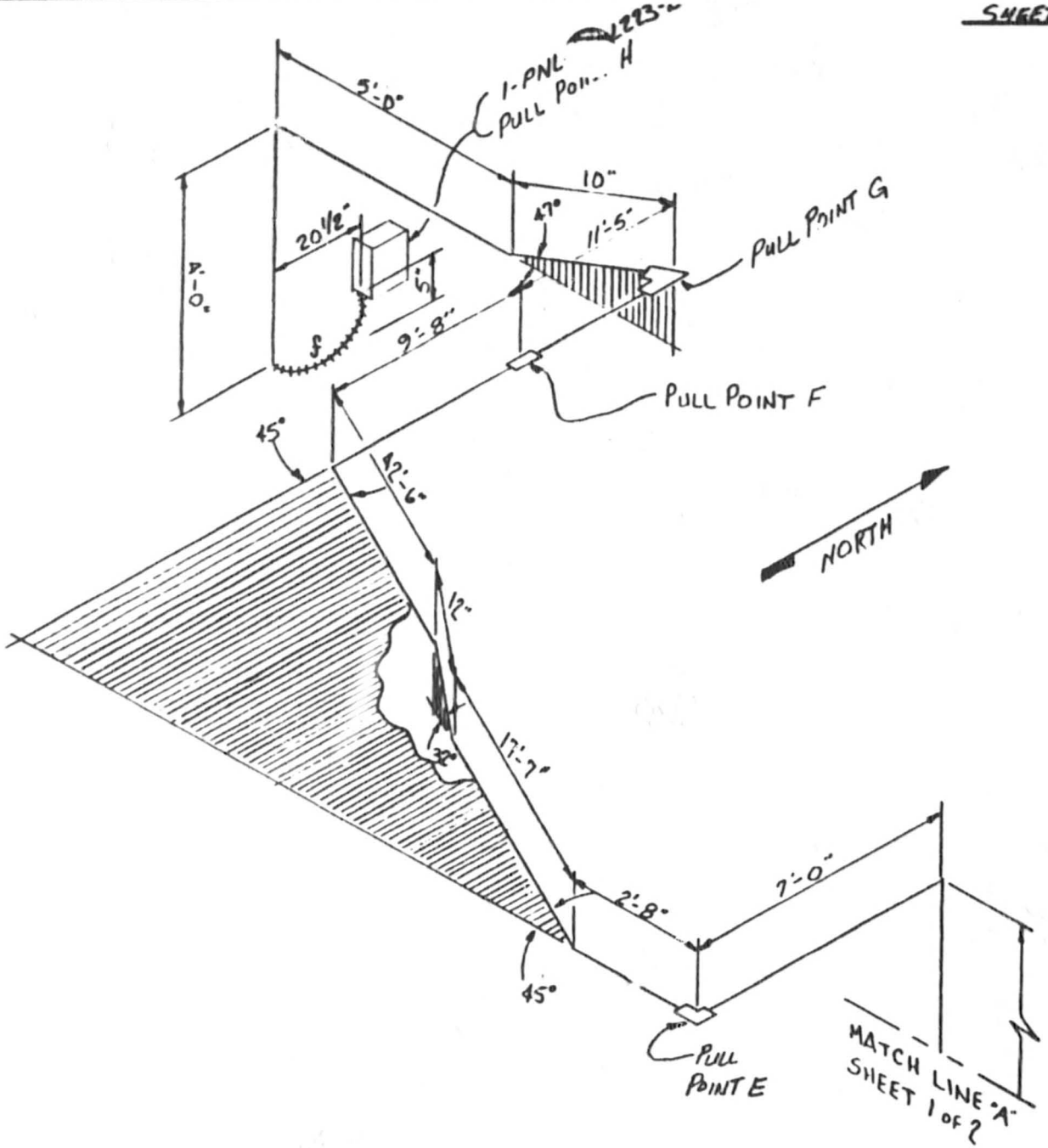

NOTES:

1. ALL BENDS HAVE A RADIUS OF 5.75" UNLESS OTHERWISE NOTED. (1")

2. TOLERANCES AS SPECIFIED BY EP 22.29

3. ALL BENDS NOT SPECIFIED ARE 90°

4.

CABLE UNID	MANU-FACTURER
SEE SHT 1 OF 2	

5. REF. DWG #

6. ALL DIMENSIONS CL TO CL

AUX BLDG.-UNIT 1

RACEWAY ISOMETRIC
DWG. ELE. 692 COND. #1PLC82B

WATTS BAR NUCLEAR PLANT
TVA/OC

ENGINEER:	DATE:
Charles L. Colvin	9-6-85

VERIFICATION: W. D. Perkins 9-6-85

APPROVED: [signature]

DRAWING NO: E1PLC82B S.P. R.0

OE: [signature] QA: 9/9/85 [signature]

OE AND QA SIGNATURES INDICATE ACCEPTANCE TO "WORSE CASE" CRITERIA.

SHEET 1 OF 2

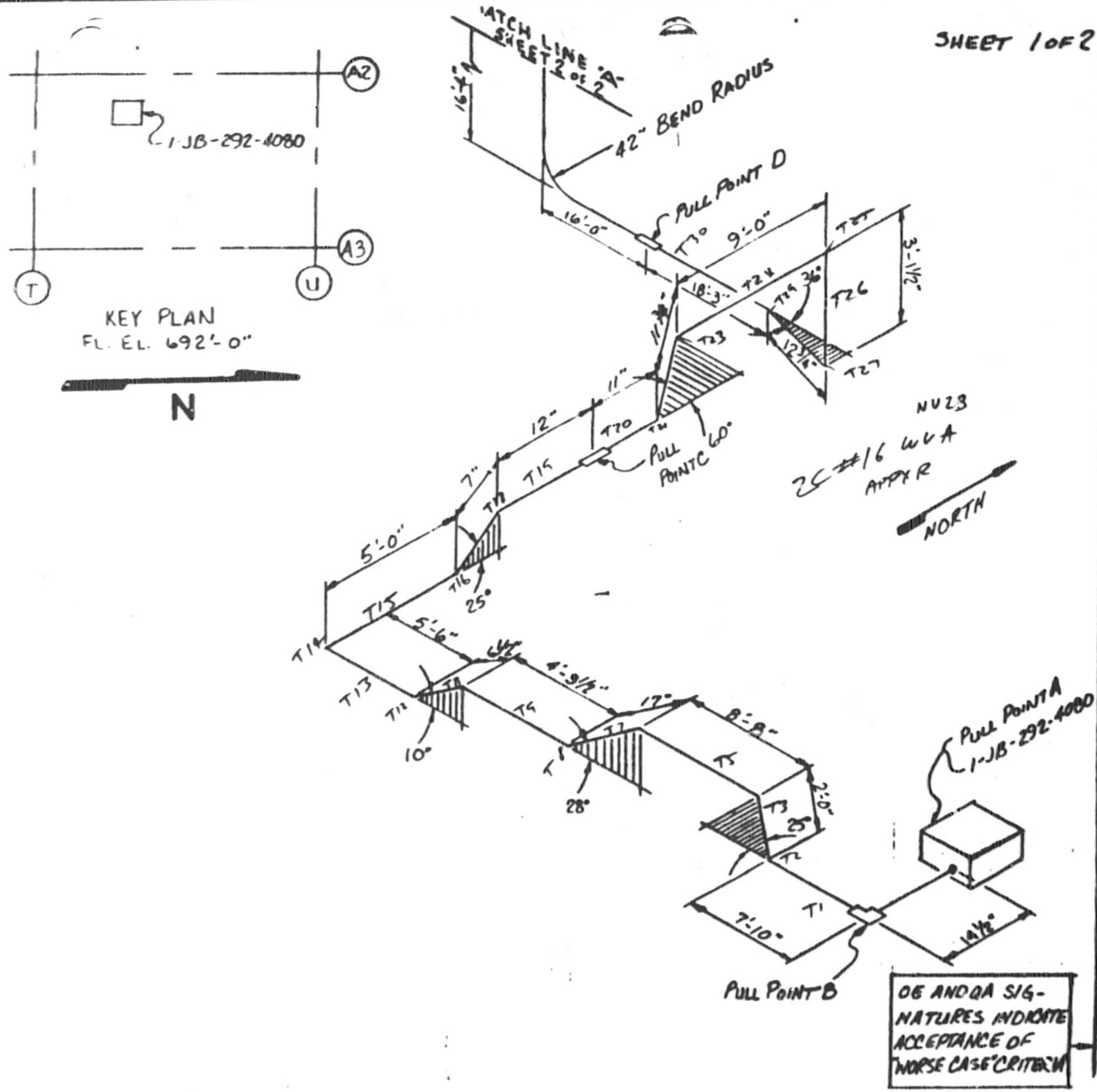

OE AND QA SIGNATURES INDICATE ACCEPTANCE OF "WORSE CASE" CRITERIA

NOTES:

1. ALL BENDS HAVE A RADIUS OF 5.75" UNLESS OTHERWISE NOTED. (1")
2. TOLERANCES AS SPECIFIED BY EP 22.29
3. ALL BENDS NOT SPECIFIED ARE 90°
4.

CABLE UNID	MANUFACTURER
1PM2445B	LATER

5. REF. DWG # 45N822-6
6. ALL DIMENSIONS Q TO Q

AUX. BLDG. - UNIT 1

RACEWAY ISOMETRIC DWG. ELE. 692 COND. 01PLC82B

WATTS BAR NUCLEAR PLANT TVA/DC

[illegible]	9-6-85
W. D. Parkins 9-6-85	
[illegible]	
NA EEB-EP22.29 SHT 1 OF 2	SAMPLE PROGRAM
	9/4/85

1PLC82B

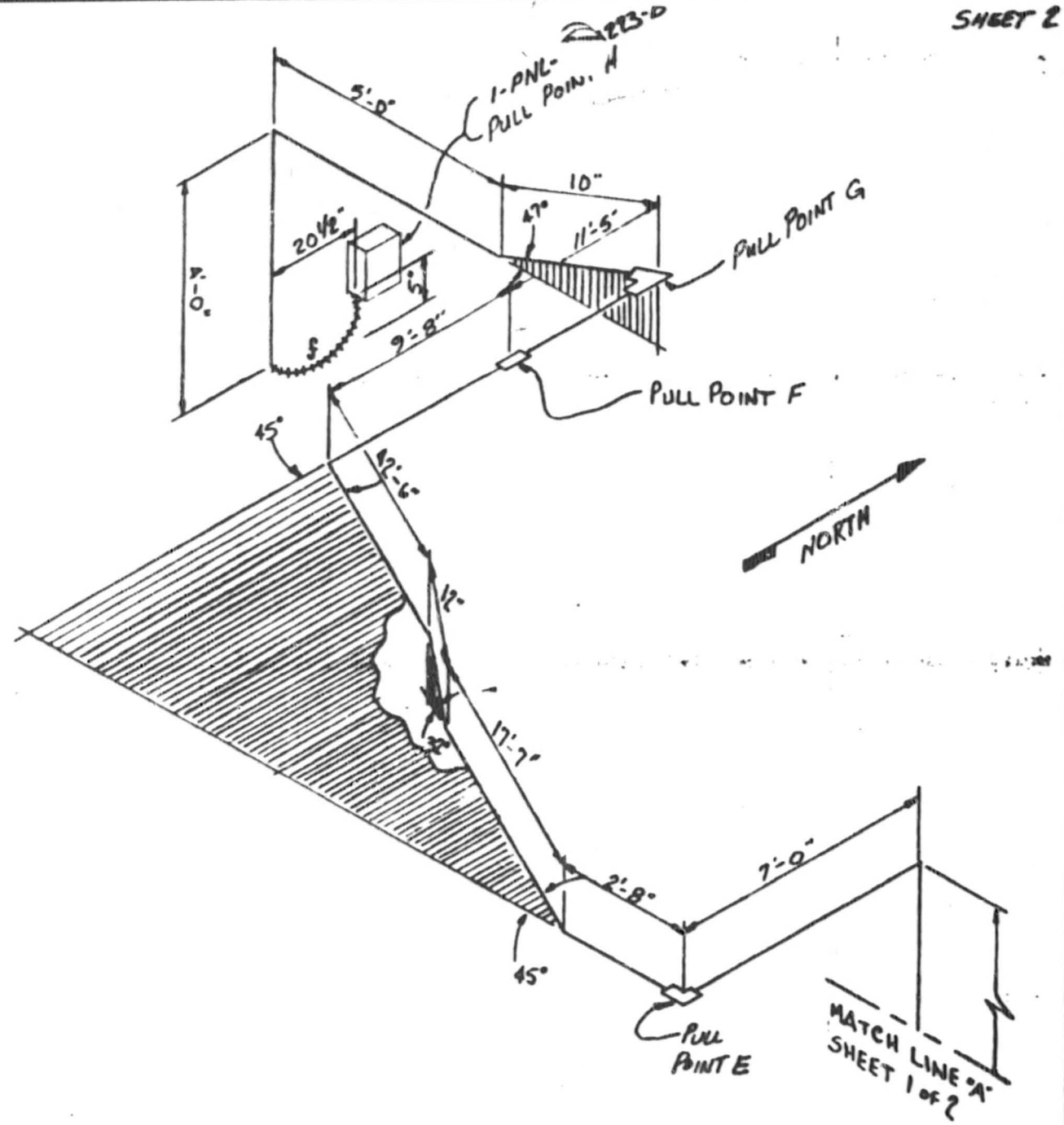

NOTES:

1. ALL BENDS HAVE A RADIUS OF 5.75" UNLESS OTHERWISE NOTED. (1")

2. TOLERANCES AS SPECIFIED BY EP 22.29

3. ALL BENDS NOT SPECIFIED ARE 90°

4.

CABLE UNID	MANU-FACTURER
SEE SHT 1 of 2	

5. REF. DWG #

6. ALL DIMENSIONS C. to C.

AUX BLDG.-UNIT 1

RACEWAY ISOMETRIC
DWG. ELE. 692 [illegible] 01PLC828

WATTS BAR NUCLEAR PLANT
TVA/OC

[illegible]	9-6-85
[illegible] 9-6-85	
[illegible]	
DRAWING NO: NA EEB-EP 22.29 SHEET 2 of 2	SAMPLE PROGRAM
QA:	9/9/85 G.W. [illegible]

OE AND QA SIGNATURES INDICATE ACCEPTANCE TO "WORSE CASE" CRITERIA.