Computed WEC Date 9/4/85
Checked [illegible] Date 9/4/85

ATTACHMENT ~~7.2 (R1)~~ 7.1 [illegible]

1VC2581A	1VC2945A	1VC3557B	1VC4420A
1VC2760B	1VC3020D	1VC3599B	1VC4421A
1VC2762A	1VC3021E	1VC3651A	1VC4431B
1VC2763A	1VC3022F	1VC3653B	1VC4439B
1VC2780A	1VC3023G	1VC3659A	1VC4442A
1VC2783B	1VC3040B	1VC3678A	1VC4449A
1VC2788A	1VC3045B	1VC3680B	1VC4455A
1VC2789A	1VC3061B	1VC3681A	1VC4456B
1VC2791A	1VC3062A	1VC3682B	1VC4479B
1VC2797B	1VC3063A	1VC3705A	1VC4595A
1VC2799B	1VC3068A	1VC3710B	1VC4596B
1VC2807B	1VC3117A	1VC3715B	1VC4664B
1VC2808A	1VC3118A	1VC3731A	1VC4665B
1VC2834B	1VC3119A	1VC3758A	1VC4674B
1VC2840A	1VC3324A	1VC4220A	1VC4820B
1VC2847B	1VC3325A	1VC4400B	1VC4840A
1VC2873B	1VC3331B	1VC4402B	1VC4895A
1VC2900A	1VC3340B	1VC4403B	1VC4896A
1VC2922B	1VC3342A	1VC4405B	1VC4897A
1VC2925B	1VC3360A	1VC4407A	1VC4898A
1VC2926B	1VC3380B	1VC4409A	1VC4899A
1VC2933A	1VC3414B	1VC4410A	1VC4900B
1VC2940A	1VC3447B	1VC4412A	1VC4901B

045215.03

Computed WEC Date 9/4/85
Checked [illegible] Date 9/4/85

ATTACHMENT ~~7.2 (R1)~~ 7.1 ~~F.1~~ 0857

1VC4904B

1VC4914A

1VC4918B

1VC4920B

045215.03

ATTACHMENT ~~7.2 (R1)~~ 21 083

A4095A	B1083E	MC408A	MC657B
A4096B	B1084E	MC409A	MC660B
B1042D	B1085E	MC417A	MC661B
B1043E	B1086F	MC424B	MC846A
B1044F	B1087F	MC427B	MC847B
B1045G	B1088F	MC429A	MC849B
B1046S	B1089G	MC432A	MC850B
B1047D	B1090G	MC433A	MC869B
B1048E	B1091G	MC629A	MC870B
B1049F	B1249E	MC630A	MC871B
B1050G	B1250E	MC633A	MC875A
B1051S	B1258B	MC637B	MC876A
B1052D	B1259A	MC640A	MC879A
B1053D	B1260A	MC641A	MC880B
B1054E	L1188B	MC642A	MC882A
B1055E	MC309A	MC645A	MC893A
B1056F	MC338A	MC646A	MC894A
B1057F	MC339A	MC647A	MC895A
B1058G	MC340A	MC650B	MC896A
B1059G	MC341A	MC651B	MC897A
B1080D	MC400B	MC652B	MC898A
B1081D	MC406B	MC655B	MC899A
B1082D	MC407B	MC656B	MC900A

045215.03

Computed WEC Date 9/4/85
Checked OSF Date 9/4/85

ATTACHMENT ~~7.2 (R1)~~ ~~6.1~~ 7.1 OSF

MC901A	MC2452B	PLC481A	PLC1621A
MC906B	MC2453B	PLC487A	PLC1623A
MC908B	MC2454B	PLC488A	PLC1624A
MC913B	MC2455B	PLC500B	PLC1626B
MC914B	MC2472A	PLC501B	PLC1627B
MC923A	MC2478B	PLC507B	PLC1629B
MC924B	MC3314A	PLC508B	PLC1630B
MC925A	MC3315A	PLC520B	PP2419B
MC926B	MC3316B	PLC521B	PP2420A
MC932A	PLC42B	PLC527B	PP2421A
MC937B	PLC50A	PLC528B	PP2422A
MC938B	PLC58B	PLC601B	PP2423A
MC944A	PLC59B	PLC604B	PP2424B
MC945B	PLC65A	PLC871B	PP2425B
MC946A	PLC66A	PLC1281A	PP2426B
MC947B	PLC114A	PLC1282A	PP2427B
MC991B	PLC141A	PLC1286A	PP2480A
MC1007B	PLC147B	PLC1287A	PP2481A
MC1008B	PLC460A	PLC1288B	PP2482A
MC2448A	PLC461A	PLC1289B	PP2483A
MC2449A	PLC467A	PLC1294B	PP2484A
MC2450A	PLC468A	PLC1295B	PP2485A
MC2451A	PLC480A	PLC1620A	PP2486A

045215.03

Computed WEC Date 9/4/85
Checked [illegible] Date 9/4/85

ATTACHMENT ~~7.1 (R1)~~ 7.1 ~~6.1~~ 025

PP2487A	PP2640S	VC596A
PP2488B	PP2641S	VC617B
PP2489B	PP2642S	VC705A
PP2490B	PP2643S	VC709B
PP2491B	PP2651S	VC728A
PP2492B	PP2652S	VC746A
PP2493B	PP2656S	VC748B
PP2494B	RM350A	VC751B
PP2495B	RM353B	VC758A
PP2502A	RM474A	VC759A
PP2504B	RM475B	
PP2540B	RM607A	
PP2541B	RM609B	
PP2542B	SG337B	
PP2543B	VC43B	
PP2544B	VC45B	
PP2545B	VC500B	
PP2546A	VC501A	
PP2547A	VC502B	
PP2548A	VC503A	
PP2549A	VC522B	
PP2550A	VC523A	
PP2551A	VC594B	

045215.03

SECTION ~~5.2~~ 7.2 OBZ

SHEET 1 OF 1

CONDUIT/CABLE SIDEWALL PRESSURE SUMMARY INSTRUMENTATION (V2); MAXIMUM ALLOWABLE SIDEWALL PRESSURE (100 POUNDS/FOOT OR VENDOR SUPPLIED LIMIT)

COMPUTED KTS DATE 11-21-85

CHECKED OBZ DATE 11-21-85

CONDUIT	SIDEWALL PRESSURE	CONDUIT	SIDEWALL PRESSURE
* RM609B	262.68	* 2NM3256E	134.17
1PLC61D	30.44	2PM6426D	3.12
1PLC62E	6.71	2PM6444E	72.87
1PLC63G	8.11	2PM7400B	70.80
1PLC82B	8.30	* 2PM7401A	120.53
1PM5664E	14.49	2PM7869D	8.07
1PM5677D	12.26	2PM7872F	9.06
1PM5678D	5.47	2PS704E	1.76
** 1PM7274A	128.02	2RM438A	6.87
1PS704E	1.68	2VC4571	45.71

* SWP EXCEEDS 100 POUNDS/FOOT

** SWP EXCEEDS 100 POUNDS/FOOT BUT NOT VENDOR SUPPLIED LIMIT

TVA 11030 (WM 7-75)

SECTION ~~5.2~~ 7.2 0D3

SHEET 1 OF 2

CONDUIT / CABLE SIDEWALL PRESSURE SUMMARY
POWER AND CONTROL (V5, V4, V3); MAXIMUM ALLOWABLE
SIDEWALL PRESSURE (300 POUNDS / FOOT OR
VENDOR SUPPLIED LIMIT

COMPUTED KTS DATE 10-19-85

CHECKED _____ DATE _____

CONDUIT	SIDEWALL PRESSURE	CONDUIT	SIDEWALL PRESSURE
B1090G	110.19	1PP2183A	29.40
MC409A	81.14	1PP2188A	103.65
* MC629A	649.12	1PP2189B	90.88
PP2481A	106.02	1PP2190B	77.22
PP2483A	69.46	1PP2280A	43.81
PP2488B	151.19	1PP2656A	12.31
1B1044D	200.29	1PV961D	27.88
* 1B1054G	1871.82	1VC580A	190.52
* 1G1524A	499.98	** 1VC582A	330.85
1G1525B	143.36	* 1VC077A	597.59
1M3380A	49.59	* 1VC1082B	303.08
** 1PLC279B	321.17	* 2M2987B	345.10
1PLC282B	45.19	2M3360A	207.25
** 1PLC2801A	318.83	2M4338B	9.18
* 1PLC2810B	816.08	* 2PLC215B	409.22
* 1PLC2814B	514.15	2PLC631B	32.02
** 1PLC2940A	467.76	2PLC852A	239.29
1PP2182B	137.15	2PLC853B	113.03

TVA 11030 (WM / P5)

SECTION ~~5.2~~ 7.2 0D3 SHEET 2 OF 2

CONDUIT / CABLE SIDEWALL PRESSURE SUMMARY
POWER AND CONTROL (V5, V4, V3); MAXIMUM ALLOWABLE
SIDEWALL PRESSURE (300 POUNDS / FOOT OR VENDOR
SUPPLIED LIMIT)

COMPUTED KTS DATE 11-21-85
CHECKED DATE

CONDUIT	SIDEWALL PRESSURE	CONDUIT	SIDEWALL PRESSURE
2PLC 860A	9.45	2PP2183A	104.95
2PLC 1136A	173.16	2PP2190B	59.90
2PLC 1184A	97.25	2PP2191A	45.79
2PLC 1185B	103.86	2PP2291A	7.70
2PLC 1280B	138.48	2PP2292A	24.18
2PLC 1928B	29.54	2PP2296B	22.78
2PLC 2300A	68.23	2PP2297B	25.02
2PLC 2303A	24.56	2PP2656A	24.75
** 2PLC 2519A	356.50	2PV0825E	111.55
2PLC 2763A	291.88	2VC1259B	13.56
2PLC 2844B	129.50	2VC2035B	127.24
2PLC 2882A	225.02	2VC2069B	208.22
2PLC 2922B	198.53	2VC2577A	17.93

* SWP EXCEEDS 300 POUNDS / FOOT

** SWP EXCEEDS 300 POUNDS / FOOT BUT NOT VENDOR SUPPLIED LIMIT

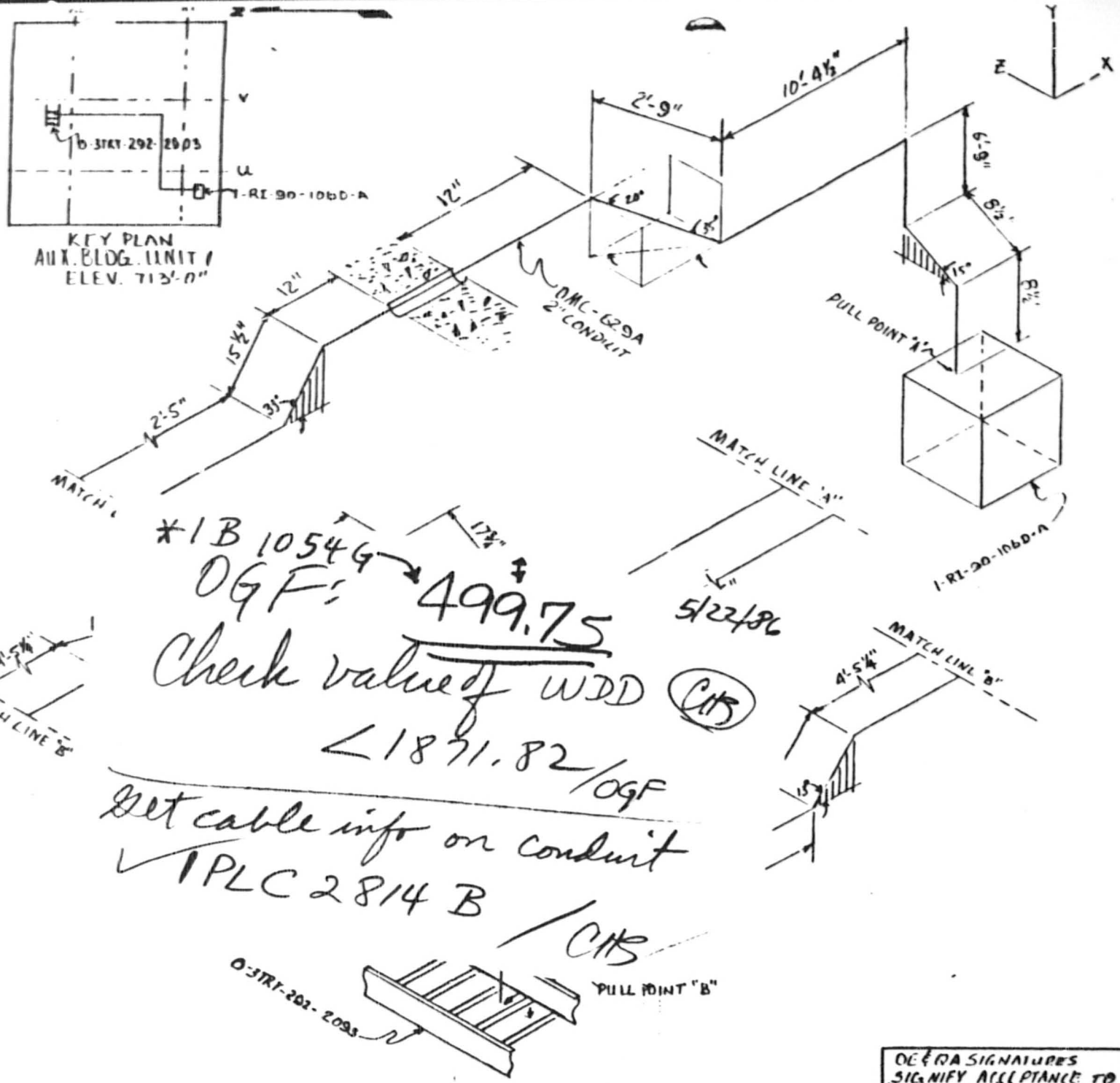

*1B 1054G → 499.75

OGF:

Check value of WDD (CHS)

<1871.82/OGF

Get cable info on conduit

✓1PLC 2814 B / CHS

5/22/86

NOTES:

1. ALL BENDS HAVE A RADIUS OF 9½" UNLESS OTHERWISE NOTED. (2"I) CONDUIT
2. TOLERANCES AS SPECIFIED BY EP-22.29
3. ALL BENDS NOT SPECIFIED ARE 90°
4.

CABLE UNID	MANU-FACTURER
1PV24A 1RM52A 1RM53A	LATER ↓

5. REF. DWG #45N824-9, 28.
6. ALL DIMENSIONS CL TO CL

AUXILIARY BUILDING UNIT-1

RACEWAY ISOMETRIC
DWG. ELE. 713' COND. #OMC629A

WATTS BAR NUCLEAR PLANT
TVA/OC

ENGINEER: Lawrence Jackson
DATE: 9-3-85

VERIFICATION: J W Rane

APPROVED: [signature]

DRAWING NO: EOMC629A S.P. R.0

OE & QA SIGNATURES SIGNIFY ACCEPTANCE TO "WORSE CASE" CRITERIA

OE: [signature]
QA: [signature]

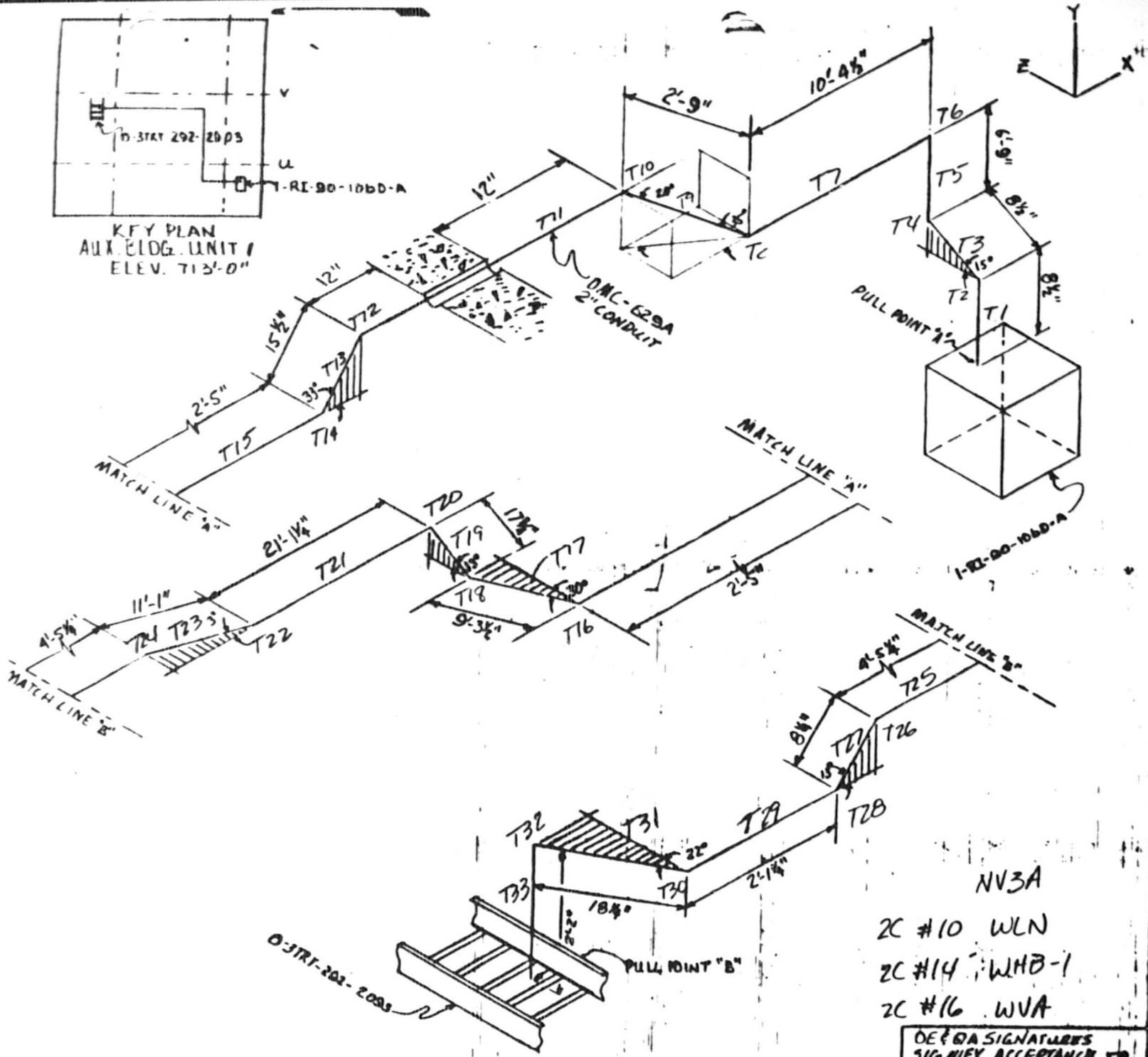

NV3A

2C #10 WLN

2C #14 WHB-1

2C #16 WVA

OE & QA SIGNATURES SIGNIFY ACCEPTANCE TO "WORSE CASE" CRITERIA

NOTES:

1. ALL BENDS HAVE A RADIUS OF 9½" UNLESS OTHERWISE NOTED. (2" I) CONDUIT
2. TOLERANCES AS SPECIFIED BY EP-22.28
3. ALL BENDS NOT SPECIFIED ARE 90°
4.

CABLE UNID	MANU-FACTURER
1PV24A 1RM52A 1RM53A	LATER ↓

5. REF. DWG #45N824-9, 28.
6. ALL DIMENSIONS a.b.c.

AUXILIARY BUILDING UNIT-1

RACEWAY ISOMETRIC
DWG. ELE. 713' [illegible]

WATTS BAR NUCLEAR PLANT
TVA/OC

[illegible]	9-3-85

[illegible]

[illegible]

[illegible] EP-22.28

SAMPLE PROGRAM

[illegible]	[illegible]

TVA 488 (EN DES 3 77)

CONDUIT OMC 629A NV3A

$D/d = 2.07/.492 = 4.21$ $w_2 = 1.4$ $K = .42$

$w_3 = .200 + 2(.075) = .35$

COMPUTED KTS DATE 9-14-85

CHECKED JRB DATE 9-17-85

pull A → B

T_1 Vertical 8½" $T = .71 \times .35 = .24$

T_2 Bend 75° $T = .24 e^{(.42)(1.31)} = .42$

T_3 Straight run 8½" slope up 15° $T = .42 + (.71)(.35)(.42 \cos 15° + \sin 15°)$ $T = .59$

T_4 Bend 75° $T = .59 e^{(.42)(1.31)} = 1.02$

T_5 Vertical 6'-9" $T = 1.02 + (6.75)(.35) = 3.38$

T_6 Bend 90° $T = 3.38 e^{(1.57)(.42)} = 6.54$

T_7 Horizontal 10'-4½" $T = 6.54 + (10.38)(.42)(.35) = 8.07$

T_8 Bend 35° $T = 8.07 e^{(.42)(.61)} = 10.43$

T_9 Straight run 2'-6" slope up 20° $T = 10.43 + (2.75)(.35)(.42 \cos 20° + \sin 20°)$ $T = 11.14$

T_{10} Bend 35° $T = 11.14 e^{(.42)(.61)} = 14.40$

T_{11} Horizontal 3'-0" $T = 14.40 + (3)(.35)(.42) = 14.84$

T_{12} Bend 33° $T = 14.84 e^{(.42)(.58)} = 18.90$

T_{13} Straight run 15½" slope down 33° $T = 18.90 + (1.29)(.35)(.42 \cos 33 - \sin 33)$ $T = 18.82$

T_{14} Bend 33° $T = 18.82 e^{(.42)(.58)} = 23.97$

T_{15} Horizontal 2'-5" $T = 23.97 + (2.42)(.42)(.35) = 24.33$

T_{16} Bend 60° $T = 24.33 e^{(.42)(1.05)} = 37.78$

T_{17} Horizontal 9'-3½" $T = 37.78 + (9.29)(.42)(.35) = 39.15$

OMC629A

COMPUTED KTS DATE 9-14-85
CHECKED JRB DATE 9-17-85

T_{18} Bend 32.5° $T = 39.15\, e^{(.57)(.42)} = 49.69$

T_{19} Straight run $17\frac{3}{4}''$ slope up 13° $T = 49.69 + (1.48)(.35)(.42 \cos 13 + \sin 13)$
$T = 50.02$

T_{20} Bend 90° $T = 50.02\, e^{(1.57)(.42)} = 96.78$

T_{21} Horizontal $21'-1\frac{1}{8}''$ $T = 96.78 + (21.10)(.42)(.35) = 99.88$

T_{22} Bend 3° $T = 99.88\, e^{(.42)(.05)} = 102.10$

T_{23} Horizontal $11'-1''$ $T = 102.10 + (11.08)(.42)(.35) = 103.73$

T_{24} Bend 3° $T = 103.73\, e^{(.42)(.05)} = 106.04$

T_{25} Horizontal $4'-5\frac{1}{4}''$ $T = 106.04 + (4.44)(.42)(.35) = 106.69$

T_{26} Bend 13° $T = 106.69\, e^{(.23)(.42)} = 117.36$

T_{27} Straight run $8\frac{1}{4}''$ slope down 13° $T = 117.36 + (.66)(.35)(.42 \cos 13° - \sin 13)$
$T = 117.41$

T_{28} Bend 13° $T = 117.41\, e^{(.23)(.42)} = 129.15$

T_{29} Horizontal $2'-1\frac{1}{4}''$ $T = 129.15 + (2.10)(.42)(.35) = 129.46$

T_{30} Bend 68° $T = 129.46\, e^{(.42)(1.19)} = 213.16$

T_{31} Horizontal $18\frac{1}{4}''$ $T = 213.16 + (1.52)(.42)(.35) = 213.38$

T_{32} Bend 90° $T = 213.38\, e^{(.42)(1.57)} = 412.86$

T_{33} Vertical $2'-2''$ $T = 412.86 - (2.17)(.35) = 412.10$

$SWP = \frac{1}{3}(1.4 \times 3 - 2)\frac{412.86}{.705} = 429.45$

OMC 629A

COMPUTED KTS DATE 9-14-85
CHECKED JRB DATE 9-17-85

pull B-A

T_{33}	Vertical 2'-2"	$T = 2.17 \times .35 = .75$
T_{32}	Bend 90°	$T = .75\, e^{(.42)(1.57)} = 1.45$
T_{31}	Horizontal 18¼"	$T = 1.45 + (1.52)(.42)(.35) = 1.67$
T_{30}	Bend 68°	$T = 1.67\, e^{(.42)(1.19)} = 2.75$
T_{26}	Horizontal 2'-1¼"	$T = 2.75 + (2.10)(.42)(.35) = 3.06$
T_{25}	Bend 13°	$T = 3.06\, e^{(.23)(.42)} = 3.37$
T_{27}	Straight run 8¼" slope up 13°	$T = 3.37 + (.69)(.35)(.42\cos 13 + \sin 13)$ $T = 3.52$
T_{26}	Bend 13°	$T = 3.52\, e^{(.23)(.42)} = 3.87$
T_{25}	Horizontal 4'-5¼"	$T = 3.87 + (4.44)(.42)(.35) = 4.52$
T_{24}	Bend 3°	$T = 4.52\, e^{(.42)(.05)} = 4.62$
T_{22}	Horizontal 11'-1"	$T = 4.62 + (11.08)(.42)(.35) = 6.25$
T_{22}	Bend 3°	$T = 6.25\, e^{(.42)(.05)} = 6.39$
T_{21}	Horizontal 21'-1¼"	$T = 6.39 + (21.10)(.42)(.35) = 9.49$
T_{20}	Bend 90°	$T = 9.49\, e^{(1.57)(.42)} = 18.36$
T_{16}	Straight run 17¾" slope down 13°	$T = 18.36 + (1.48)(.35)(.42\cos 13 - \sin 13)$ $T = 18.46$
T_{18}	Bend 32.5°	$T = 18.46\, e^{(.57)(.42)} = 23.43$
T_{17}	Horizontal 9'-3½"	$T = 23.43 + (9.29)(.42)(.35) = 24.80$
T_{16}	Bend 60°	$T = 24.80\, e^{(.42)(1.05)} = 38.51$

TVA 488 (EN DES 3 77)

OMC 629A

COMPUTED KTS DATE 9-14-85
CHECKED JRB DATE 9-17-85

T_{15} Horizontal 2'-5" $T = 38.51 + (2.42)(.42)(.35) = 38.87$

T_{14} Bend 33° $T = 38.87\, e^{(.42)(.58)} = 49.51$

T_{13} Straight run $15\frac{1}{2}$" slope up 33° $T = 49.51 + (1.29)(.35)(.42\cos 33 + \sin 33)$ $T = 49.91$

T_{12} Bend 33° $T = 49.91 e^{(.42)(.58)} = 63.58$

T_{11} Horizontal 3'-0" $T = 63.58 + (3)(.35)(.42) = 64.02$

T_{10} Bend 35° $T = 64.02\, e^{(.42)(.61)} = 82.75$

T_9 Straight run 2'-9" slope down 20° $T = 82.75 + (2.75)(.35)(.42\cos 20 - \sin 20)$ $T = 82.80$

T_8 Bend 35° $T = 82.80\, e^{(.42)(.61)} = 107.03$

T_7 Horizontal 10'-4½" $T = 107.03 + (10.38)(.42)(.35) = 108.56$

T_6 Bend 90° $T = 108.56\, e^{(.42)(1.57)} = 210.05$

T_5 Vertical 2'-5" $T = 210.05 - (6.75)(.35) = 207.69$

T_4 Bend 75° $T = 207.69\, e^{(.42)(1.31)} = 359.99$

T_3 Straight run 8½" slope down 15° $T = 359.99 + (.71)(.35)(.42\cos 15 - \sin 15)$ $T = 360.03$

T_2 Bend 75° $T = 360.03\, e^{(.42)(1.31)} = 624.04$

T_1 Vertical 8½" $T = 624.04 - (.71)(.35) = 623.79$

$SWP = \frac{1}{2}(3 \times 1.4 - 2)\,\frac{624.04}{.705} = 649.12$

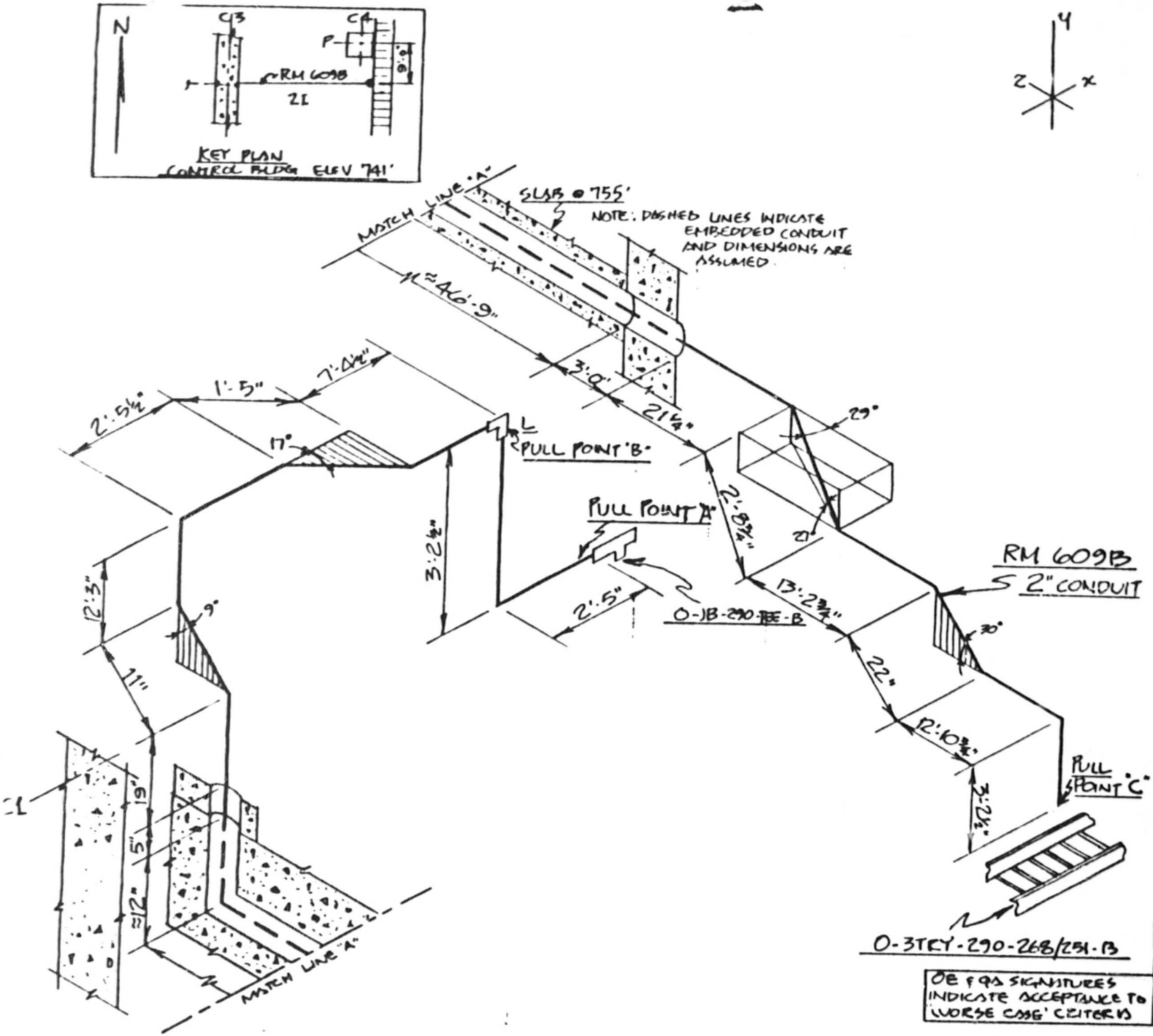

NOTES:

1. ALL BENDS HAVE A RADIUS OF 9½" UNLESS OTHERWISE NOTED. (2I)" CONDUIT
2. TOLERANCES AS SPECIFIED BY EP-22.29
3. ALL BENDS NOT SPECIFIED ARE 90°
4.

CABLE UNID	MANUFACTURER
RM114B RM118B RM119B RM120B RM121B RM122B V1235B V1236B V1237B V1245B	LATER

5. REF. DWG # 45W 814-10, 45W 816-1, 5
6. ALL DIMENSIONS CL TO CL

CONTROL BLDG (COMMON)

RACEWAY ISOMETRIC DWG. ELE. 741 COND. # RM 609B

WATTS BAR NUCLEAR PLANT TVA/OC

ENGINEER:	DATE:
Marc Cook	9/7/86

VERIFICATION: Lawrence W Jackson

APPROVED: R A Devonger

DRAWING NO:	
E RM609B S.P.	R.0

OE & QA SIGNATURES INDICATE ACCEPTANCE TO 'WORSE CASE' CRITERIA

OE:	QA:
Ron E Cox / JAP	9/9/85 T. W. Rogers

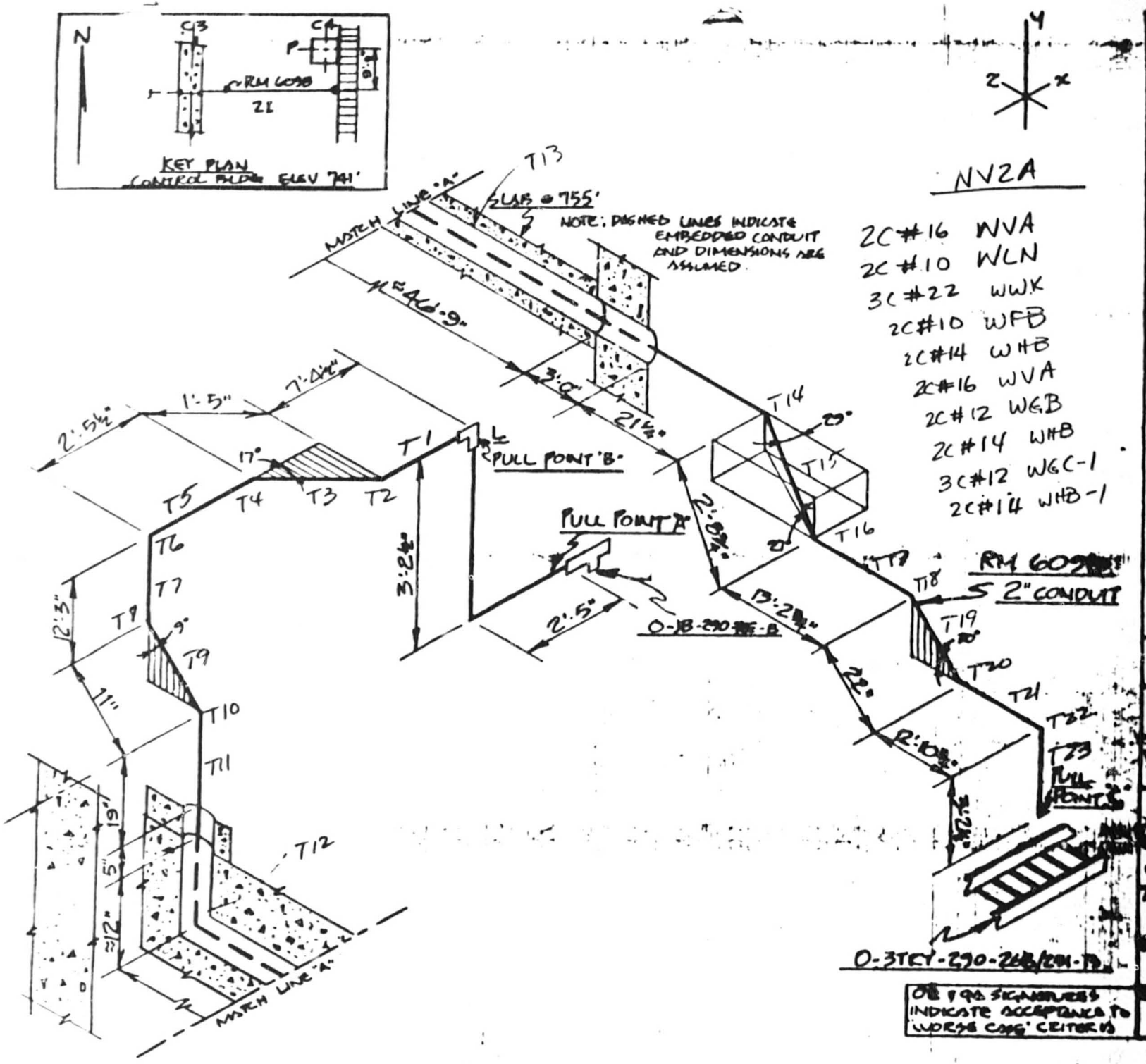

OE & QA SIGNATURES INDICATE ACCEPTANCE TO "WORSE CASE" CRITERIA

NOTES:

1. ALL BENDS HAVE A RADIUS OF 9½" UNLESS OTHERWISE NOTED. (2I)" CONDUIT
2. TOLERANCES AS SPECIFIED BY EP 22.29
3. ALL BENDS NOT SPECIFIED ARE 90°
4. CABLE UNID | MANUFACTURER

CABLE UNID	MANUFACTURER
RM114B	LATER
RM118B	
RM119B	
RM120B	
RM121B	
RM122B	
V1234B	
V1236B	
V1237B	
V1245B	

5. REF. DWG. # 45W 814-10, 45W 816-1, 5
6. ALL DIMENSIONS [illegible]

CONTROL BLDG (COMMON)

RACEWAY ISOMETRIC DWG. [illegible] 741 [illegible]

[illegible] TVA/OE

[illegible] 9/7/86

[illegible]

[illegible]

[illegible] EP-22.29 [illegible]

9/9/85

[illegible]

CONDUIT RM 609B NV2 SHEET 1 OF 2

$D/d = 2.07 / .492 = 4.21$ $W_c = 1.4$ $K = .42$

COMPUTED KTS DATE 9-14-85
CHECKED JRB DATE 9-17-85

Cable mark	quantity	lb/ft	total
WEB	1	.156	.156
WGB	1	.100	.100
WGC-1	1	.140	.140
WHB	2	.070	.140
WHB-1	1	.070	.070
WLN	1	.200	.200
WVA	2	.075	.150
WWK	1	.170	.170
		W_t =	1.126

pull C → B

T_{23} Vertical 3'-2½" $T = 3.21 \times 1.13 = 3.61$

T_{22} Bend 90° $T = 3.61\, e^{(1.57)(.42)} = 6.99$

T_{21} Horizontal 12'-10¾" $T = 6.99 + (12.90)(1.126)(.42) = 13.09$

T_{20} Bend 30° $T = 13.09\, e^{(.42)(.52)} = 16.31$

T_{19} Straight run 22" slope up 30° $T = 16.31 + (\frac{22}{12})(1.13)(.42\cos 30 + \sin 30)$
$T = 18.09$

T_{18} Bend 30° $T = 18.09\, e^{(.42)(.52)}$
$T = 22.54$

T_{17} Horizontal 13'-2¾" $T = 22.54 + (13.23)(.42)(1.13)$
$T = 28.79$

T_{16} Bend 29° $T = 28.79\, e^{(.42)(.51)} = 35.61$

T_{15} Straight run 2'-8¾" slope up 27° $T = 35.61 + (2.73)(1.13)(.42\cos 27° + \sin 27°)$
$T = 38.16$

T_{14} Bend 29° $T = 38.16\, e^{(.42)(.51)}$
$T = 47.20$

RM 609B

COMPUTED KTS DATE 9-14-85
CHECKED JRB DATE 9-17-85

T_{13} Horizontal 51'-6½" $T = 47.20 + (51.52)(1.13)(.42)$
$T = 71.56$

T_{12} Bend 90° $T = 71.56\, e^{(.42)(1.57)}$
$T = 130.42$

T_{11} Vertical 3'-0" $T = 138.42 + (3)(1.13) = 141.80$

T_{10} Bend 9° $T = 141.80\, e^{(.42)(.16)} = 151.47$

T_9 Straight run 11" slope up 81° $T = 151.47 + (\frac{11}{12})(1.13)(.42\cos 81° + \sin 81°)$
$T = 152.56$

T_8 Bend 9° $T = 152.56\, e^{(.42)(.16)} = 162.96$

T_7 Vertical 12'-3" $T = 162.96 + (12.25)(1.13)$
$T = 176.76$

T_6 Bend 90° $T = 176.76\, e^{(1.57)(.42)} = 344.90$

T_5 Horizontal 2'-5½" $T = 344.90 + (2.46)(1.13)(.42)$
$T = 343.06$

T_4 Bend 17° $T = 343.06\, e^{(.42)(.29)} = 388.59$

T_3 Horizontal 1'-5" $T = 388.59 + (1.42)(1.13)(.42)$
$T = 389.26$

T_2 Bend 17° $T = 389.26\, e^{(.42)(.29)} = 440.92$

T_1 Horizontal 7'-4½" $T = 440.92 + (7.38)(1.13)(.42) = 444.41$

$SWP = \frac{XT}{R} = \frac{(.42)(440.92)}{.705} = 262.68$

Total θ_s = 440°

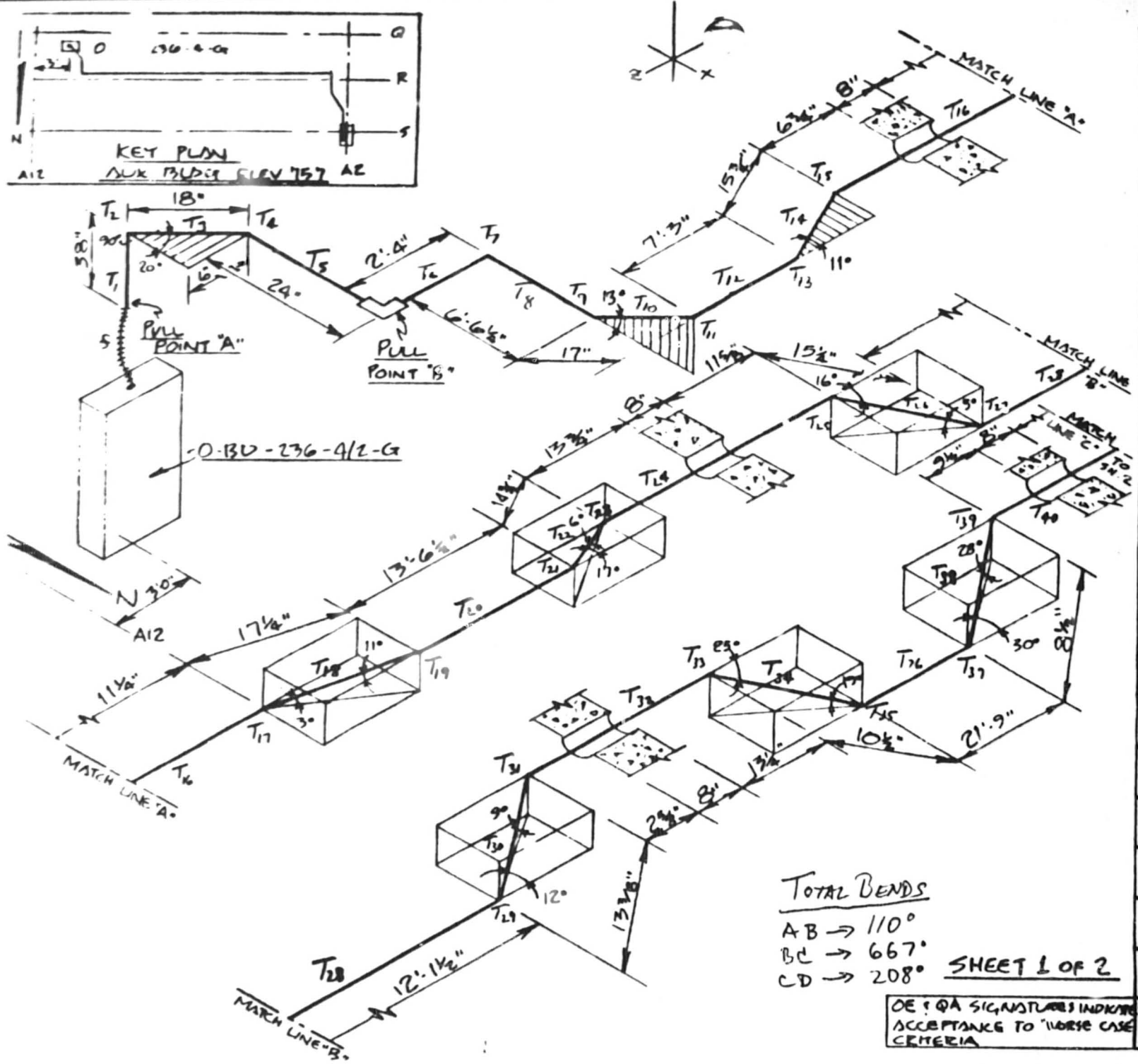

TOTAL BENDS

AB → 110°
BC → 667°
CD → 208°

SHEET 1 OF 2

OE & QA SIGNATURES INDICATE ACCEPTANCE TO "WORSE CASE" CRITERIA

NOTES:

1. ALL BENDS HAVE A RADIUS OF 9½" UNLESS OTHERWISE NOTED. (2I)
2. TOLERANCES AS SPECIFIED BY EP 22.29
3. ALL BENDS NOT SPECIFIED ARE 90°
4.

CABLE UNID	MANU-FACTURER
1B26G	LATER
27G	LATER
31G	LATER
32G	LATER

Each is NV4G, 2-1/C #8, WDD, DC, Blue Feeder

.323 ØD
.082 CSA
.083 #/ft

19.52% fill

5. REF. DWG # 45W828-7, 8, 11
6. ALL DIMENSIONS CL TO CL

AUXILIARY BLDG. U-1

RACEWAY ISOMETRIC DWG. ELE. 757 COND. # 1B 1054

WATTS BAR NUCLEAR PLANT
TVA/OC

ENGINEER: [signature] DATE: 8/27/85

VERIFICATION: [signature]

APPROVED: [signature]

DRAWING NO: N/A EEB-EP-22.29 SAMPLE PROGRAM

OE: QA:

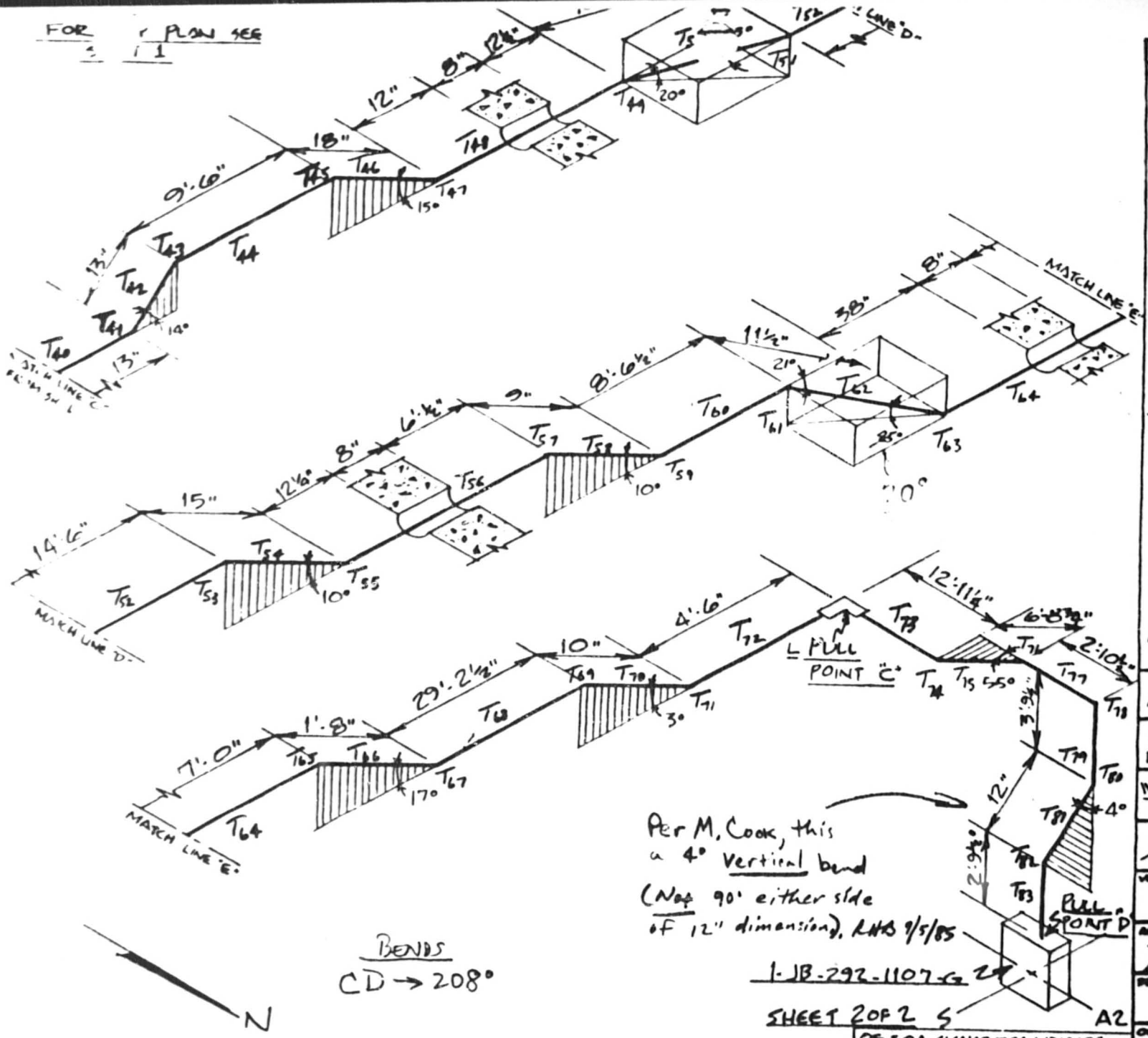

NOTES:

1. ALL BENDS HAVE A RADIUS OF 9½" UNLESS OTHERWISE NOTED. (2I)
2. TOLERANCES AS SPECIFIED BY EP 22.29
3. ALL BENDS NOT SPECIFIED ARE 90°
4.

CABLE UNID	MANU-FACTURER
1B26G	LATER
27G	
31G	
32G	

Each is NV4G 1/C#8 WDD

5. REF. DWG # 45W828-7,8,11
6. ALL DIMENSIONS CL TO CL

AUXILIARY BLDG. U1

RACEWAY ISOMETRIC DWG. ELE.757 COND. # 1B 1034G

WATTS BAR NUCLEAR PLANT TVA/OC

ENGINEER: [signature] DATE: 8/27/85

VERIFICATION: [signature]

APPROVED: [signature]

PROJECT NO: N/A EEB-EP-22.29 SAMPLE PROGRAM

OE & QA SIGNATURES INDICATE ACCEPTANCE TO "WORSE CASE" CRITERIA

OE: QA:

CONDUIT 1B-1054G (8 cables) NV4G SHEET 1 OF 7

$K = .3$, $D/d = 2.07/.323 = 6.41$

$W_t = 8 \times .083 = .664$, $W_c = 1.4$

$\underline{K} = W_c \times K = 1.4 \times .3 = .42$,

COMPUTED RHB DATE 9-5-85

CHECKED JRB DATE 9-6-85

PULL C to B

T_{72} Horiz. Straight $T = \underline{K} L W_t = .42 \times 4.5 \times .664$
$= 1.25\#$

T_{71} Vert. Bend (3°) $T = T_{72} e^{\underline{K}b} = 1.25\, e^{.42 \times .05} = 1.25 \times 1.02$
$= 1.28\#$

T_{70} Up Ramp (3°) $T = L W_t (\sin\alpha + \underline{K} \cos\alpha) + T_{71}$
$= \frac{10}{12} \times .664 (\sin 3° + .42 \cos 3°) + 1.28$
$= 1.54\#$

T_{69} Vert. Bend (3°) $T = T_{70} e^{\underline{K}b} = 1.54\, e^{.42 \times .05} = 1.54 \times 1.02$
$= 1.58\#$

T_{68} Horiz. Straight $T = \underline{K} L W_t + T_{69} = .42 \times \left(29 + \frac{2.5}{12}\right) \times .664 + 1.58$
$= 9.72\#$

T_{67} Vert. Bend (17°) $T = T_{68} e^{\underline{K}b} = 9.72\, e^{.42 \times .30} = 9.72 \times 1.13$
$= 11.01\#$

T_{66} Up Ramp (17°) $T = L W_t (\sin\alpha + \underline{K} \cos\alpha) + T_{67}$
$= \left(1 + \frac{8}{12}\right) \times .664 (\sin 17° + .42 \cos 17°) + 11.01$
$= 11.78\#$

T_{65} Vert. Bend (17°) $T = T_{66} e^{\underline{K}b} = 11.78\, e^{.42 \times .30} = 11.78 \times 1.13$
$= 13.35\#$

T_{64} Horiz. Straight $T = \underline{K} L W_t + T_{65} = .42 \times \left(10 + \frac{10}{12}\right) \times .664 + 13.35$
$= 16.37\#$

T_{63} Vert. Bend (21°) $T = T_{64} e^{\underline{K}b} = 16.37\, e^{.42 \times .37} = 16.37 \times 1.17$
$= 19.09\#$

TVA 11030 (WM 7-75)

COMPUTED RHB DATE 9-5-85
CHECKED JRB DATE 9-6-85

T_{62} Up Ramp (25°)

$T = LW_t(\sin\alpha + \underline{K}\cos\alpha) + T_{63}$
$= \frac{11.5}{12} \times .664(\sin 25° + .42\cos 25°) + 19.09$
$= 19.60\#$

T_{61} Vert. Bend (21°)

$T = T_{62}e^{\underline{K}b} = 19.6\,e^{.42\times.37} = 19.6 \times 1.17$
$= 22.86\#$

T_{60} Horiz. Straight

$T = \underline{K}\,LW_t + T_{61} = .42 \times \left(8 + \frac{6.5}{12}\right) \times .664 + 22.86$
$= 25.25\#$

T_{59} Vert. Bend (10°)

$T = T_{60}e^{\underline{K}b} = 25.25\,e^{.42\times.17} = 25.25 \times 1.08$
$= 27.17\#$

T_{58} Up Ramp (10°)

$T = LW_t(\sin\alpha + \underline{K}\cos\alpha) + T_{59}$
$= .75 \times .664(\sin 10° + .42\cos 10°) + 27.17$
$= 27.46\#$

T_{57} Vert. Bend (10°)

$T = T_{58}e^{\underline{K}b} = 27.46\,e^{.42\times.17} = 27.46 \times 1.08$
$= 29.55\#$

T_{56} Horiz. Straight

$T = \underline{K}\,LW_t + T_{57} = .42 \times \left(6 + \frac{20.75}{12}\right) \times .664 + 29.55$
$= 31.70\#$

T_{55} Vert. Bend (10°)

$T = T_{56}e^{\underline{K}b} = 31.70\,e^{.42\times.17} = 31.7 \times 1.08$
$= 34.11\#$

T_{54} Up Ramp (10°)

$T = LW_t(\sin\alpha + \underline{K}\cos\alpha) + T_{55}$
$= \frac{15}{12} \times .664(\sin 10° + .42\cos 10°) + 34.11$
$= 34.60\#$

T_{53} Vert. Bend (10°)

$T = T_{54}e^{\underline{K}b} = 34.6\,e^{.42\times.17} = 34.6 \times 1.08$
$= 37.23\#$

T_{52} Horiz. Straight

$T = \underline{K}\,LW_t + T_{53} = .42 \times 14.5 \times .664 + 37.23$
$= 41.28\#$

TVA 11080 (WM 7-75)

COMPUTED RHB DATE 9-5-85
CHECKED JRB DATE 9-6-85

T_{51} Vert Bend (25°) $T = T_{52} e^{\underline{K}b} = 41.28\, e^{.42 \times .44} = 41.28 \times 1.20$
$= 49.58\#$

T_{50} Down Ramp (20°) $T = LW_t (\underline{K} \cos\alpha - \sin\alpha) + T_{51}$
$= \frac{10.5}{12} \times .664 (.42 \cos 20° - \sin 20°) + 49.58$
$= 49.61\#$

T_{49} Vert. Bend (25°) $T = T_{50} e^{\underline{K}b} = 49.61\, e^{.42 \times .44} = 49.61 \times 1.20$
$= 59.59\#$

T_{48} Horiz. Straight $T = \underline{K} L W_t + T_{49} = .42 \times \frac{32.5}{12} \times .664 + 59.59$
$= 60.34\#$

T_{41} Vert. Bend (15°) $T = T_{48} e^{\underline{K}b} = 60.34 e^{.42 \times .26} = 60.34 \times 1.12$
$= 67.36\#$

T_{46} Up Ramp (15°) $T = LW_t (\sin\alpha + \underline{K} \cos\alpha) + T_{47}$
$= 1.5 \times .664 (\sin 15° + .42 \cos 15°) + 67.36$
$= 68.02\#$

T_{45} Vert. Bend (15°) $T = T_{46} e^{\underline{K}b} = 68.02 e^{.42 \times .26} = 68.02 \times 1.12$
$= 75.93\#$

T_{44} Horiz. Straight $T = \underline{K} L W_t + T_{45} = .42 \times 9.5 \times .664 + 75.93$
$= 78.58\#$

T_{43} Vert. Bend (14°) $T = T_{44} e^{\underline{K}b} = 78.58 e^{.42 \times .24} = 78.58 \times 1.11$
$= 87.07\#$

T_{42} Down Ramp (14°) $T = LW_t (\underline{K} \cos\alpha - \sin\alpha) + T_{43}$
$= \frac{13}{12} \times .664 (.42 \cos 14° - \sin 14°) + 87.07$
$= 87.19\#$

T_{41} Vert. Bend (14°) $T = T_{42} e^{\underline{K}b} = 87.19\, e^{.42 \times .24} = 87.19 \times 1.11$
$= 96.61\#$

COMPUTED RHB DATE 9-5-85
CHECKED JRB DATE 9-6-85

T_{40} Horiz. Straight $T = \underline{K} L W_t + T_{41} = .42 \times \frac{30.5}{12} \times .664 + 96.61$
$= 97.32\#$

T_{39} Vert. Bend (30°) $T = T_{40} e^{\underline{K}b} = 97.32 e^{.42\pi/6} = 97.32 \times 1.25$
$= 121.26\#$

T_{38} Down Ramp (28°) $T = L W_t (\underline{K} \cos\alpha - \sin\alpha) + T_{39}$
$= \frac{8.5}{12} \times .664 (.42 \cos 28° - \sin 28°) + 121.26$
$= 121.21\#$

T_{37} Vert. Bend (30°) $T = T_{38} e^{\underline{K}b} = 121.21 e^{.42\pi/6} = 121.21 \times 1.25$
$= 151.02\#$

T_{36} Horiz. Straight $T = \underline{K} L W_t + T_{37} = .42 \times 21.75 \times .664 + 151.02$
$= 157.09\#$

T_{35} Vert. Bend (25°) $T = T_{36} e^{\underline{K}b} = 157.09 e^{.42 \times .44} = 157.09 \times 1.20$
$= 188.68\#$

T_{34} Up Ramp (19°) $T = L W_t (\sin\alpha + \underline{K} \cos\alpha) + T_{35}$
$= \frac{10.5}{12} \times .664 (\sin 19° + .42 \cos 19°) + 188.68$
$= 189.10\#$

T_{33} Vert Bend (25°) $T = T_{34} e^{\underline{K}b} = 189.10 e^{.42 \times .44} = 189.1 \times 1.20$
$= 227.14\#$

T_{32} Horiz. Straight $T = \underline{K} L W_t + T_{33} = .42 \times \frac{23.875}{12} \times .664 + 227.14$
$= 227.69\#$

T_{31} Vert. Bend (12°) $T = T_{32} e^{\underline{K}b} = 227.69 e^{.42 \times .21} = 227.69 \times 1.09$
$= 248.63\#$

T_{30} Down Ramp (9°) $T = L W_t (\underline{K} \cos\alpha - \sin\alpha) + T_{31}$
$= \frac{13.375}{12} \times .664 (.42 \cos 9° - \sin 9°) \cdot 248.63$
$= 248.82\#$

TVA 11030 (WM-7-75)

COMPUTED RHL DATE 9-5-85
CHECKED JRB DATE 9-6-85

T_{29} Vert. Bend (12°) $T = T_{30} e^{\underline{K}b} = 248.82 e^{.42 \times .21} = 248.82 \times 1.09$
$= 271.70\#$

T_{28} Horiz. Straight $T = \underline{K} L W_t + T_{29} = .42 \times (12 + \frac{1.5}{12}) \times .664 + 271.7$
$= 275.08\#$

T_{27} Vert. Bend (16°) $T = T_{28} e^{\underline{K}b} = 275.08 e^{.42 \times .28} = 275.08 \times 1.12$
$= 309.31\#$

T_{26} Up Ramp (5°) $T = L W_t (\sin\alpha + \underline{K}\cos\alpha) + T_{27}$
$= \frac{15.25}{12} \times .664 (\sin 5° + .42 \cos 5°) + 309.31$
$= 309.74\#$

T_{25} Vert. Bend (16°) $T = T_{26} e^{\underline{K}b} = 309.74 e^{.42 \times .28} = 309.74 \times 1.12$
$= 348.28\#$

T_{24} Horiz. Straight $T = \underline{K} L W_t + T_{25} = .42 \times \frac{33.375}{12} \times .664 + 348.28$
$= 349.06\#$

T_{23} Vert. Bend (17°) $T = T_{24} e^{\underline{K}b} = 349.06 e^{.42 \times .30} = 349.06 \times 1.13$
$= 395.38\#$

T_{22} Up Ramp (6°) $T = L W_t (\sin\alpha + \underline{K}\cos\alpha) + T_{23}$
$= \frac{14.75}{12} \times .664 (\sin 6° + .42 \cos 6°) + 395.38$
$= 395.81\#$

T_{21} Vert. Bend (17°) $T = T_{22} e^{\underline{K}b} = 395.81 e^{.42 \times .30} = 395.81 \times 1.13$
$= 448.34\#$

T_{20} Horiz. Straight $T = \underline{K} L W_t + T_{21} = .42 \times (13 + \frac{6.5}{12}) \times .664 + 448.34$
$= 452.12\#$

T_{19} Vert. Bend (11°) $T = T_{20} e^{\underline{K}b} = 452.12 e^{.42 \times .19} = 452.12 \times 1.08$
$= 490.08\#$

TVA 11030 (WM 7-75)

COMPUTED RHB DATE 9-5-85
CHECKED JRB DATE 9-6-85

T_{18} Down Ramp (3°) $T = LW_t(\underline{K}\cos\alpha - \sin\alpha) + T_{19}$
$= \frac{17.25}{12} \times .664\,(.42\cos 3° - \sin 3°) + 490.08$
$= 490.43\#$

T_{17} Vert. Bend (11°) $T = T_{18}e^{\underline{K}b} = 490.43\,e^{.42\times.19} = 490.43 \times 1.08$
$= 531.62\#$

T_{16} Horiz. Straight $T = \underline{K}LW_t + T_{17} = .42 \times \frac{26}{12} \times .664 + 531.62$
$= 532.22\#$

T_{15} Horiz. Bend (11°) $T = T_{16}e^{\underline{K}b} = 532.22\,e^{.42\times.19} = 532.22 \times 1.08$
$= 576.91\#$

T_{14} Horiz. Straight $T = \underline{K}LW_t + T_{15} = .42 \times \frac{15.75}{12} \times .664 + 576.91$
$= 577.28\#$

T_{13} Horiz. Bend (11°) $T = T_{14}e^{\underline{K}b} = 577.28\,e^{.42\times.19} = 577.28 \times 1.08$
$= 625.76\#$

T_{12} Horiz. Straight $T = \underline{K}LW_t + T_{13} = .42 \times 7.25 \times .664 + 625.76$
$= 627.78\#$

T_{11} Horiz. Bend (90°) $T = T_{12}e^{\underline{K}b} = 627.78\,e^{.42\pi/2} = 627.78 \times 1.93$
$= 1214.30\#$

T_{10} Down Ramp (13°) $T = LW_t(\underline{K}\cos\alpha - \sin\alpha) + T_{11}$
$= \frac{17}{12} \times .664\,(.42\cos 13° - \sin 13°) + 1214.30$
$= 1214.47\#$

T_9 Vert. Bend (13°) $T = T_{10}e^{\underline{K}b} = 1214.47\,e^{.42\times.23} = 1214.47 \times 1.10$
$= 1335.90\#$

T_8 Horiz. Straight $T = \underline{K}LW_t + T_9 = .42 \times \left(6 + \frac{6.25}{12}\right) \times .664 + 1335.9$
$= 1337.72\#$

T_7 Horiz. Bend (90°) $T = T_8e^{\underline{K}b} = 1337.72\,e^{.42\pi/2} = 1337.72 \times 1.93$
$= 2587.52\#$

EVA 11010 (WM / 75)

COMPUTED RHB DATE 9-5-85
CHECKED JRB DATE 9-6-85

T_6 Horiz. Straight $T = \underline{K} L W_t + T_7 = .42 \times (2 + \frac{4}{12}) \times .664 + 2587.52$
$= \underline{\underline{2588.17\ \#}}$

$SWP_{CB} = X T_7 / R$, where $X = .51$, from interpolation of table in section 3.2.1.6.4 of G-38.

$= \dfrac{.51 \times 2587.52}{.705}$

$\boxed{SWP_{CB} = 1871.82\ \#/ft}$ Worst Case!

<u>PULL A to B, B to C, C to D, D to C, and B to A</u> are less severe due to shorter lengths, more downward lengths, and/or fewer bends.
∴ Neglect.

CONDUIT 1B-1054G

COMPUTED KEA DATE 3-5-86
CHECKED RJN DATE 3/6/86

PULL B-C

$D/d = \frac{2.07}{.323} = 6.41$

$W_T = 8(.083) = .664$
$K = 1.4 \times .3 = .42$

T6 : 2'4" (Horiz) — $T6 = (.42)(2.333)(.664) + 0 = .650^{\#}$

T7 : 90° (Horiz) — $T7 = .650e^{(.42)(1.57)} = 1.256^{\#}$

T8 : 6'6¼ (Horiz) — $T8 = (.42)(6.520)(.664) + 1.256 = 3.074^{\#}$

T9 : 13° Bend (Vert) — $T9 = 3.074e^{(.42)(.226)} = 3.380^{\#}$

T10 : 13° Slope up (17") — $T10 = (.664)(1.416)(\sin 13° + .42 \cos 13°) + 3.380 = .940(.224 + .409) + 3.380 = 3.975^{\#}$

T11 : 90° Horiz Bend — $= 3.975e^{(.42)(1.57)} = 7.686^{\#}$

T12 : 7'3" Horiz — $= (.42)(7.25)(.664) + 7.686 = 9.707^{\#}$

T13 : 11° Bend (Horiz) — $= 9.707e^{(.42)(.191)} = 10.517^{\#}$

T14 : 15.75" Straight (Horiz) — $= (.42)(1.312)(.664) + 10.517^{\#} = 10.882^{\#}$

T15 : 11° Bend — $= 10.882e^{(.42)(.191)} = 11.79^{\#}$

T16 : 26" Straight — $= (.42)(2.167)(.664) + 11.79^{\#} = 12.394^{\#}$

T17 : 11° Bend (Horiz) — $= 12.39e^{(.42)(.191)}$ $13.42^{\#}$

TVA 11030 (WM-7-75)

CONDUIT 1B-1054G

COMPUTED KEA DATE 3-5-86
CHECKED RJR DATE 3/6/86

T18	3° slope-up 17 1/4"	$T18 = (.664)(1.437)(\sin 3 + (.42)\cos 3) + 13.42$ $= .954(.052 + .419) + 13.42$ $= 13.869^{\#}$
T19	11° BEND	$T19 = 13.869e^{(.42)(.191)} = 15.027^{\#}$
T20	13'-6 1/2" STRAIGHT	$T20 = (.42)(13.5416)(.664) + 15.027 =$ $= 18.80^{\#}$
T21	17° BEND	$T21 = 18.80e^{(.42)(.296)} = 21.29^{\#}$
T22	6° SLOPE-DOWN	$T22 = (.664)(1.229)(.42\cos 6 - \sin 6) + 21.29$ $= .816(.417 - .104) + 21.29$ $= 21.545^{\#}$
T23	17° BEND	$T23 = 21.545e^{(.42)(.296)} = 24.397^{\#}$
T24	2.78' STRAIGHT	$T24 = (.42)(2.78)(.664) + 24.397 = 25.172^{\#}$
T25	16° BEND	$T25 = 25.172^{(.42)(.279)} = 28.301^{\#}$
T26	5° SLOPE-DOWN 15 1/4"	$T26 = (.664)(1.27)(.42\cos 5 - \sin 5) + 28.301^{\#} =$ $= .843(.418 - .087) + 28.301^{\#} =$ $= 28.58^{\#}$
T27	16° (BEND)	$T27 = 28.58e^{(.42)(.279)} = 32.133^{\#}$
T28	12'-1 1/2" STRAIGHT	$T28 = (.42)(12.125)(.664) + 32.133 = 35.5^{\#}$
T29	12° BEND	$T29 = 35.5e^{(.42)(.209)} = 38.8^{\#}$
T30	9° slope-up	$T30 = (.664)(13.375)(\sin 9 + (.42)\cos 9) + 38.8^{\#}$ $= 8.881(.156 + .41) + 38.8$ $= 43.83^{\#}$
T31	12° (BEND)	$T31 = 43.83e^{(.42)(.209)} = 47.85^{\#}$

TVA 11030 (WM-7-75)

CONDUIT : 1B-1054 G

COMPUTED KGA DATE 3-5-84
CHECKED RJN DATE 3/6/86

T32 : 1.989' STRAIGHT $T_{32} = (.42)(1.989)(.664) + 47.85 =$
$= 48.40$ #

T33 : 25° HOR. BEND $T_{33}: 48.40e^{(.42)(.436)} = 58.12$ #

T34 : 19° SLOPE DOWN $T_{34} : (.664)(.875)(.42 \cos 19 - \sin 19) + 58.12$ #
$.581 \quad (.397 - .325) + 58.12$ #
$= 58.16$ #

T35 25° BEND $T_{35} : 58.16\, e^{(.42)(.436)} = 69.84$ #

T36 21'-9" STRAIGHT $T_{36} : (.42)(21.75)(.664) + 69.84 =$
$= 75.90$ #

T37 30° BEND $T_{37} : 75.90\, e^{(.42)(.523)} = 94.54$ #

T38 28° SLOPE-UP $T_{38} = (.664)(.708)(\sin 28 + (.42) \cos 28) + 94.54$ #
$= .470 \quad (.469 + .370) + 94.54$
$= 94.93$ #

T39 30° BEND $T_{39} = 94.93\, e^{(.42)(.523)} = 118.25$ #

T40 30.5' STRAIGHT $T_{40} : (.42)(2.54)(.664) + 118.25$ # $= 118.95$ #

T41 14° BEND $T_{41} : 118.95\, e^{(.42)(.244)} = 131.78$ #

T42 14° (SLOPE-UP) $T_{42} : (.664)(1.08)(\sin 14 + (.42) \cos 14) + 131.78 =$
$= .717 \quad (.241 + .4075) + 131.78$
$= 132.24$ #

T43 14° BEND $T_{43} : 132.24\, e^{(.42)(.244)} = 146.51$ #

T44 9'-6' STRAIGHT $T_{44} = (.42)(9.5)(.664) + 146.51$ # $= 149.159$ #

FVA 11030 (WM-7-75)

CONDUIT 1B-1054G

SHEET 4 OF 6

COMPUTED KCA DATE 3-5-86

CHECKED [illegible] DATE 8/6/86

T45	15° BEND	T45: $149.159 e^{(.42)(.261)} = 166.44$ #
T46	18" SLOPE DOWN @ 15°	T46: $(.664)(1.5)(.42 \cos 15 - \sin 15) + 166.44$ $.996 (.405 - .258) + 166.44$ $= 166.58$ #
T47	15° BEND	T47: $166.58 e^{(.42)(.261)} = 185.87$ #
T48	2.70' 1/2" [illegible]	T48: $(.42)(2.70)(.664) + 185.87 = 186.62$ #
T49	25° BEND	T49: $186.62 e^{(.42)(.436)} = 224.12$ #
T50	20° SLOPE UP	T50: $(.664)(.875)(\sin 20 + .42 \cos 20) + 224.12$ # $.581 (.342 + .394) + 224.12$ # $= 224.54$
T51	25° BEND	T51: $224.54 e^{(.42)(.436)} = 269.66$ #
T52	14.5' STRAIGHT	T52: $(.42)(14.5)(.664) + 269.66 = 273.70$ #
T53	10° BEND	T53: $273.70 e^{(.42)(.174)} = 294.45$ #
T54	10° SLOPE DOWN 15"	T54: $(.664)(1.25)(.42 \cos 10 - \sin 10) + 294.45$ $.83 (.413 - .173) + 294.45$ $= 294.64$ #
T55	10° BEND	T55: $294.64 e^{(.42)(.174)} = 316.97$ #
T56	7.729' STRAIGHT	T56: $(.42)(7.729)(.664) + 316.97 = 319.12$ #
T57	10° BEND	T57: $319.12 e^{(.42)(.174)} = 343.31$ #
T58	10° SLOPE DOWN	T58: $(.664)(.75)(.42 \cos 10 - \sin 10) + 343.31 =$ $.498 (.413 - .173) + 343.31 =$ $= 343.43$ #

TVA 11030 (WM-7-75)

CONDUIT : 1B-1054G

COMPUTED KEA DATE 3-5-86
CHECKED RJN DATE 3/6/86

T59 10° BEND $T59 : 343.43 e^{(.42)(.174)} = 369.46$ #

T60 8'-6½" STRAIGHT $T60 : (.42)(8.54)(.664) + 369.46$ # $=$
$= 371.84$ #

T61 21° BEND $T61 : 371.84\, e^{(.42)(.366)} = 433.62$ #

T62 20° SLOPE DOWN $T62 : (.664)(.958)(.42 \cos 20 - \sin 20) + 433.62$ # $=$
$= .636\ (.395 - .342) + 433.62 =$
$= 433.65$

T63 21° BEND $T63 : 433.65\, e^{(.42)(.366)} = 505.70$ #

T64 10.83' (STRAIGHT) $T64 : (.42)(10.83)(.664) + 505.70 = 508.72$ #

T65 17° BEND $T65 : 508.72\, e^{(.42)(.297)} = 576.30$ #

T66 1'8" SLOPE DOWN 17° $T66 : (.664)(1.66)(.42 \cos 17 - \sin 17) + 576.30$ #
$.90 (.402 - .292) + 576.30$
576.4#

T67 17° BEND $= 576.4\, e^{(.42)(.297)} = 652.98$ #

T68 29'-2½" STRAIGHT $= (.42)(29.208)(.664) + 652.98$ #
$= 661.126$ #

T69 3° BEND $= 661.126\, e^{(.42)(.052)} = 675.72$ #

T70 3° SLOPE DOWN $= (.664)(.833)((.42) \cos 3 - \sin 3) + 675.72$ #
$= .553\ (.419 - .052) + 675.72$
$= 675.92$ #

T71 3° BEND $= 675.92\, e^{(.42)(.052)} = 690.84$ #

T72 4'-6" STRAIGHT $= (.42)(4.5)(.664) + 690.84$ # $= 692.09$ #

VA 11G30 (WM-7-75)

CONDUIT 13-1054G

COMPUTED KKA DATE 3-5-86

CHECKED RJN DATE 3/6/86

SWP @ T71 where X ≈ .51

$$SWP = X \frac{I}{R} \quad .51 \left(\frac{690.84}{.705} \right) = 499.75 \text{ lbs/FT}$$

$$R = \frac{9.5 - 1.035}{12} = \frac{8.465}{12} = .705$$

VA 11030 (WM-7-75)

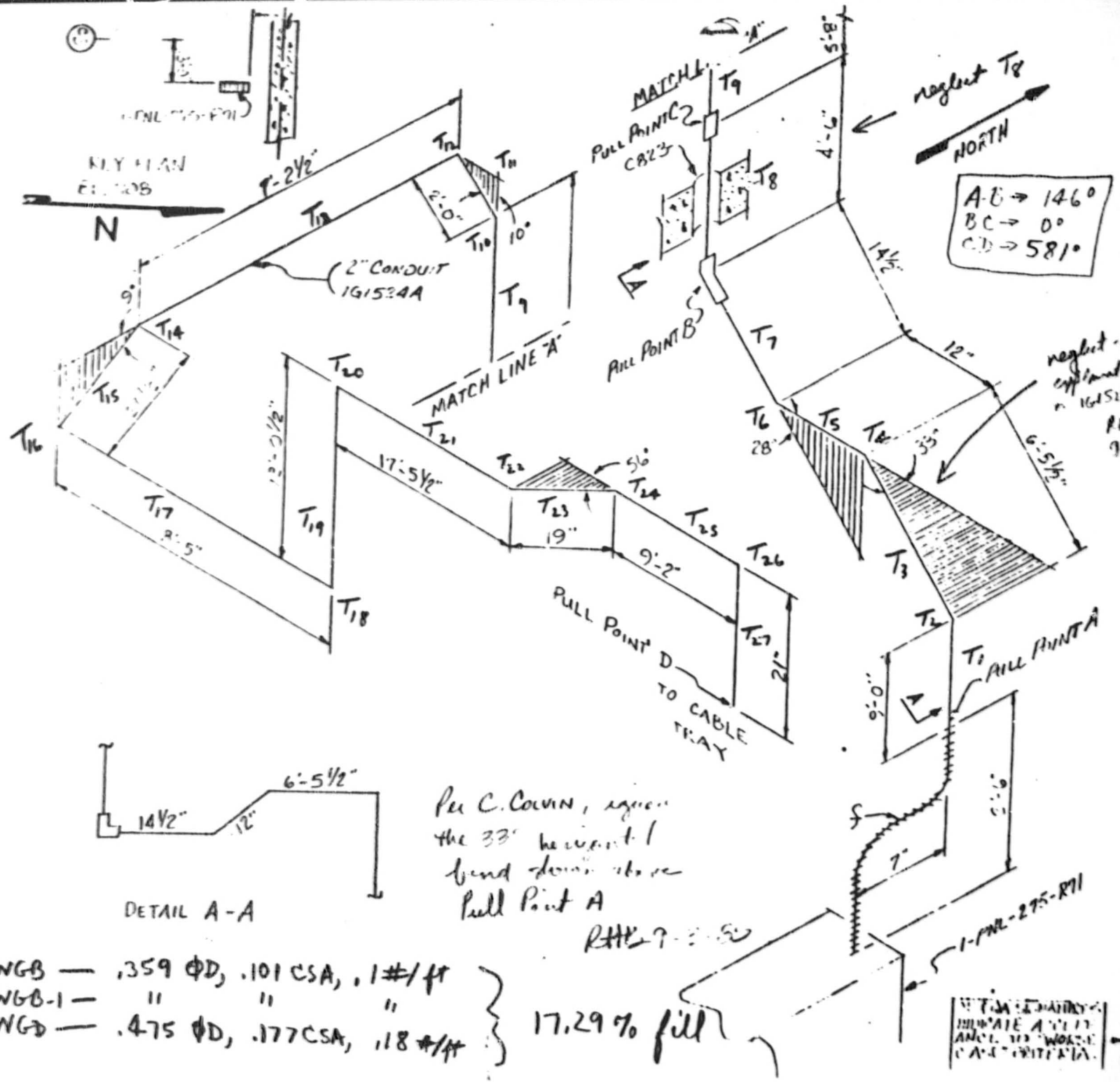

Per C. Colvin, ignore the 33" horizontal bend down above Pull Point A

RHB 9-3-85

WGB — .359 ΦD, .101 CSA, .1#/ft
WGB-1 — " " "
WGD — .475 ΦD, .177 CSA, .18 #/ft
} 17.29% fill

NOTES:

1. ALL BENDS HAVE A RADIUS OF 9.50" UNLESS OTHERWISE NOTED. (2I)
2. TOLERANCES AS SPECIFIED BY EP 22.29
3. ALL BENDS NOT SPECIFIED ARE 90°
4.

CABLE UNID	MANU-FACTURER	Trip Bus NV3A
IG221A	WGB LATER	1-4/C #12
IG222A	WGB-1	"
IG223A	WGD	1-4/C #12
IG227	WGB	1-4/C #12
IG235	"	"

5. REF. DWG # 45W812-4
6. ALL DIMENSIONS C to C

CONTROL BLDG—UNIT 1

RACEWAY ISOMETRIC DWG. ELE. 708 COND. #1G1524A

WATTS BAR NUCLEAR PLANT TVA/OC

ENGINEER: Charles G. Colvin Jr. DATE: 8-28-85

VERIFICATION:

APPROVED:

PROGRAM NO. NA FEB-EP 22.29 SAMPLE PROGRAM

OR: C.S. Hall

[illegible] INDICATE ACCEPT ANCE TO WORSE CASE CRITERIA.

CONDUIT 1G-1524A (5 cables)

$K = .3$, $D/d = 2.07/.475 = 4.358$

$W_t = (4 \times .1) + .18 = .58$ $\quad W_c = 1.4$

$\underline{K} = W_c \times K = 1.4 \times .3 = .42$

SHEET 1 OF 2

COMPUTED RHG DATE 9-4-85

CHECKED JRB DATE 9-5-85

PULL C to D (581')

T_9 Vert. Straight (Up) $\quad T = LW_t = \left(5 + \frac{8}{12}\right) \times .58$
$= 3.29$ #

T_{10} Vert. Bend (10°) $\quad T = T_9 e^{\underline{K}b} = 3.29\, e^{.42 \times .17} = 3.29 \times 1.08$
$= 3.54$ #

T_{11} Up Ramp (80°) $\quad T = LW_t(\sin\alpha + \underline{K}\cos\alpha) + T_{10}$
$= 2 \times .58\,(\sin 80° + .42 \cos 80°) + 3.54$
$= 4.76$ #

T_{12} Vert. Bend (90°) $\quad T = T_{11} e^{\underline{K}b} = 4.76\, e^{.42\pi/2} = 4.76 \times 1.93$
$= 9.21$ #

T_{13} Horiz. Straight $\quad T = \underline{K} LW_t + T_{12} = .42 \times \left(7 + \frac{2.5}{12}\right) \times .58 + 9.21$
$= 10.97$ #

T_{14} Vert. Bend (9°) $\quad T = T_{13} e^{\underline{K}b} = 10.97\, e^{.42 \times .16} = 10.97 \times 1.07$
$= 11.72$ #

T_{15} Down Ramp (9°) $\quad T = LW_t(\underline{K}\cos\alpha - \sin\alpha) + T_{14}$
$= (21.5/12) \times .58\,(.42 \cos 9° - \sin 9°) + 11.72$
$= 11.99$ #

T_{16} Horiz. Bend (90°) $\quad T = T_{15} e^{\underline{K}b} = 11.99\, e^{.42 \times \pi/2} = 11.99 \times 1.93$
$= 23.19$ #

T_{17} Horiz. Straight $\quad T = \underline{K} LW_t + T_{16} = .42 \times \left(8 + \frac{5}{12}\right) \times .58 + 23.19$
$= 25.24$ #

T_{18} Vert. Bend (90°) $\quad T = T_{17} e^{\underline{K}b} = 25.24\, e^{.42\pi/2} = 25.24 \times 1.93$
$= 48.81$ #

T_{19} Vert. Straight (Up) $\quad T = LW_t + T_{18} = \left(13 + \frac{.5}{12}\right) \times .58 + 48.81$
$= 56.38$ #

COMPUTED RHB DATE 9-4-85
CHECKED JRB DATE 9-5-85

T_{20} Vert. Bend (90°) $T = T_{19} e^{\mu\theta} = 56.38 e^{.42\pi/2} = 56.38 \times 1.93$
$= 109.05\#$

T_{21} Horiz. Straight $T = \mu L W_t + T_{20} = .42 \times \left(17 + \frac{5.5}{12}\right) \times .58 + 109.05$
$= 113.30\#$

T_{22} Horiz. Bend (56°) $T = T_{21} e^{\mu\theta} = 113.3\, e^{.42 \times .98} = 113.3 \times 1.51$
$= 170.81\#$

T_{23} Horiz. Straight $T = \mu L W_t + T_{22} = .42 \times \left(\frac{19}{12}\right) \times .58 + 170.81$
$= 171.20\#$

T_{24} Horiz. Bend (56°) $T = T_{23} e^{\mu\theta} = 171.2\, e^{.42 \times .98} = 171.2 \times 1.51$
$= 258.09\#$

T_{25} Horiz. Straight $T = \mu L W_t + T_{24} = .42 \times \left(9 + \frac{2}{12}\right) \times .58 + 258.09$
$= 260.33\#$

T_{26} Vert. Bend (90°) $T = T_{25} e^{\mu\theta} = 260.33\, e^{.42\pi/2} = 260.33 \times 1.93$
$= 503.55\#$

T_{27} Vert. Straight (Down) $T = T_{26} - L W_t = 503.55 - \left(\frac{21}{12} \times .58\right)$
$= 502.53\#$

$SWP_{CL} = X\, T_{26}/R = \frac{.7 \times 503.55}{.705}$, where $X = .70$ based on chart in sect. 3.2.1.6A of 6-3

$\boxed{SWP_{CL} = 499.98\ \#/ft}$ Worst Case!

PULL A to B, B to C, D to C, C to B, and B to A are less severe due to more downward length +/or shorter runs + fewer bends. ∴ Negligible.

TVA 11030 (WM 7-73)

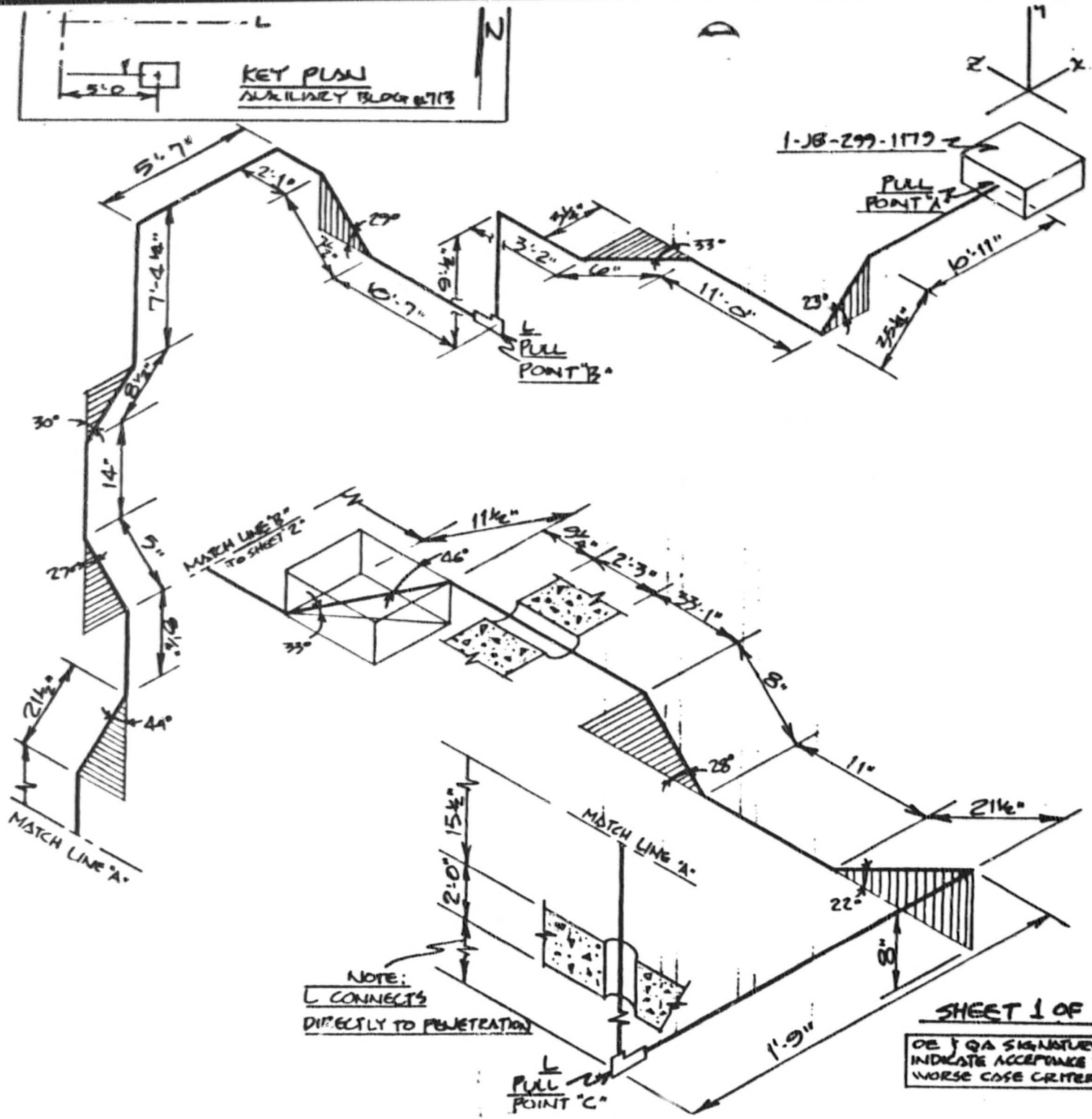

NOTES:

1. ALL BENDS HAVE A RADIUS OF 5 3/4" UNLESS OTHERWISE NOTED. (1I)
2. TOLERANCES AS SPECIFIED BY EP 22.29
3. ALL BENDS NOT SPECIFIED ARE 90°
4.

CABLE UNID	MANU-FACTURER
1PM3870D	LATER

5. REF. DWG # 15W810-21,44 45N824-2,3,9,28/45N822-6,8
6. ALL DIMENSIONS CL TO CL

AUXILIARY BLDG U1

RACEWAY ISOMETRIC
DWG. ELE. 713' COND. #1PLC61D

WATTS BAR NUCLEAR PLANT
TVA/OC

ENGINEER: [signature] DATE: 8/28/85

VERIFICATION: [signature]

APPROVED: [signature]

DRAWING NO: E1PLC61D S.P. R.0

OE & QA SIGNATURES INDICATE ACCEPTANCE TO WORSE CASE CRITERIA

OE: [signature] QA: C.S. Hsieh

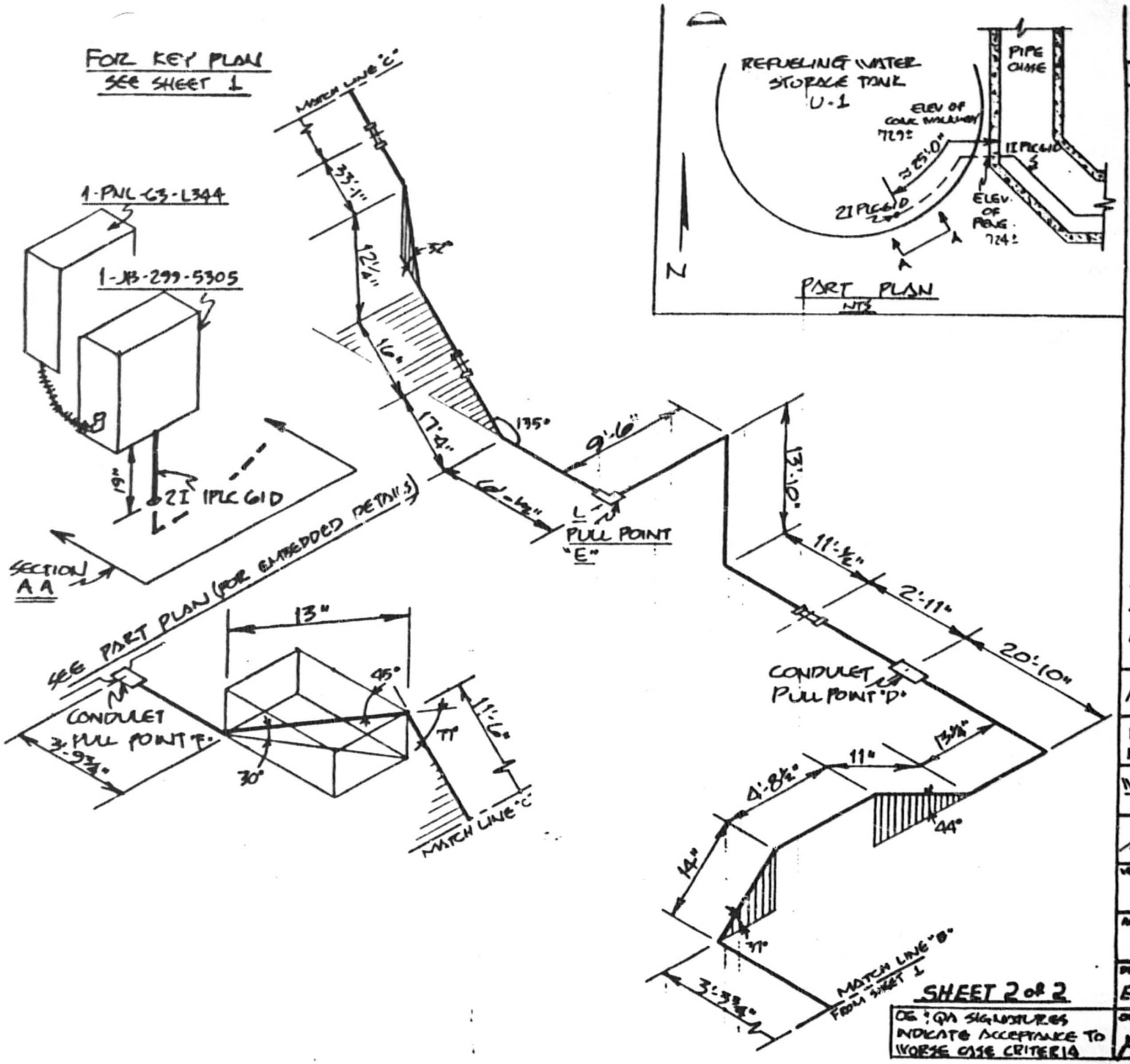

NOTES:

1. ALL BENDS HAVE A RADIUS OF 5¾" UNLESS OTHERWISE NOTED. (1I)
2. TOLERANCES AS SPECIFIED BY EP 22.29
3. ALL BENDS NOT SPECIFIED ARE 90°
4.

CABLE UNID	MANU-FACTURER
1PM3870D	LATER

5. REF. DWG # 15N810-21,44 45N824-2,3,9,28/45N822-6,8
6. ALL DIMENSIONS CL TO CL

AUXILIARY BLDG U-1

RACEWAY ISOMETRIC
DWG. ELE. 713 COND. # 1PLC61D

WATTS BAR NUCLEAR PLANT
TVA/OC

ENGINEER: Marc Cook
DATE: 8/28/85

VERIFICATION: J.W. Lane

APPROVED: [signature]

DRAWING NO: E1PLC61D S.P. R.0

SHEET 2 of 2

OE & QA SIGNATURES INDICATE ACCEPTANCE TO WORSE CASE CRITERIA

OE: [signature]
QA: C.S. Hsieh

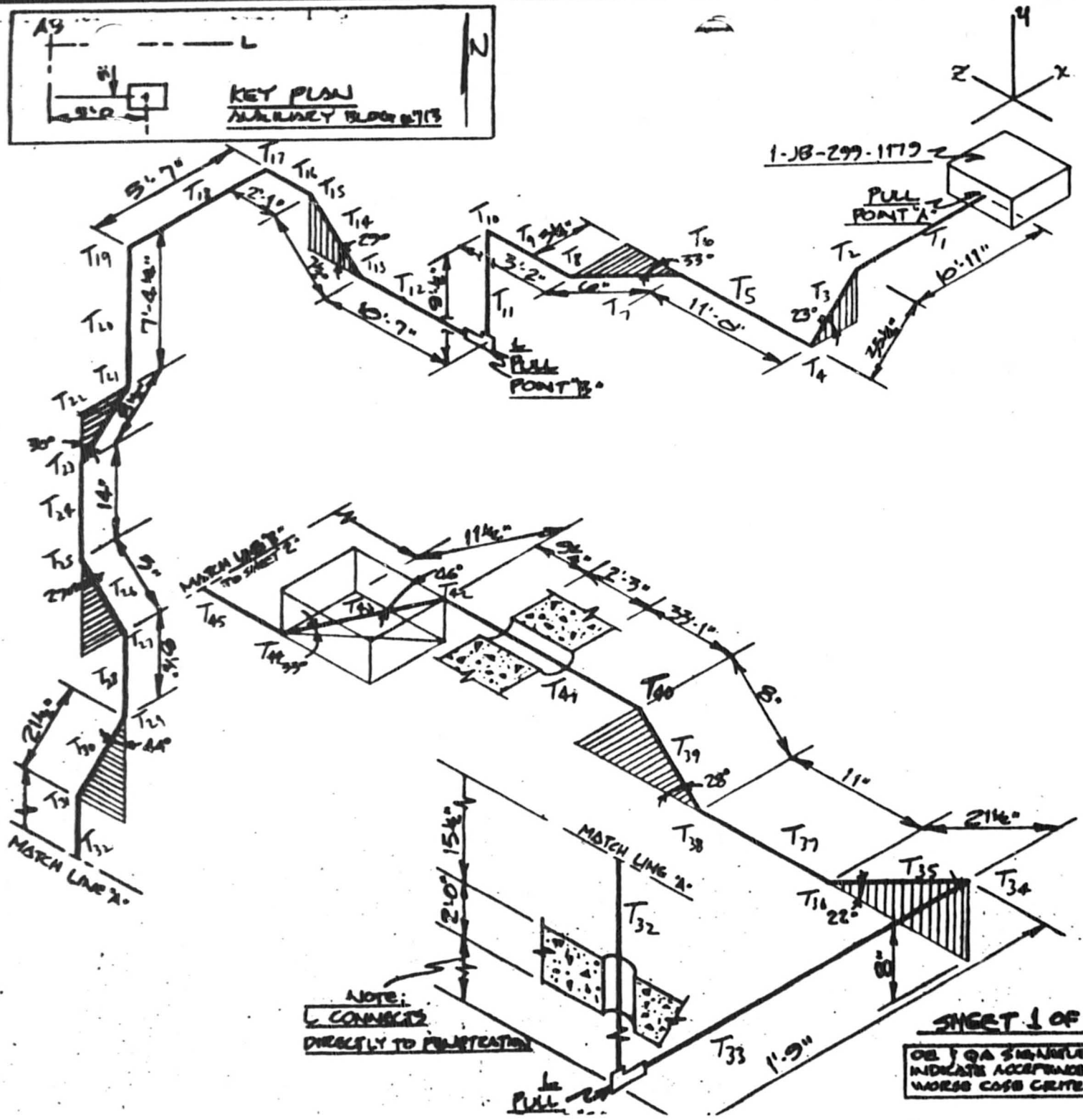

NOTES:

1. ALL BENDS HAVE A RADIUS OF 5¾" UNLESS OTHERWISE NOTED. (11)

2. TOLERANCES AS SPECIFIED BY EP 22.29

3. ALL BENDS NOT SPECIFIED ARE 90°

4.

CABLE UNID	MANU-FACTURER
1PM3870D	LATER
WVA (	1-2/C #16)
for instrument loop	913

NV2D

.387"ΦD .098 CSA .075#/

5. REF. DWG # 15W810-21,44 45N824-2,3,9,28/45N822-6,8

6. ALL DIMENSIONS ℄ TO ℄ 11, 4 7, fill

AUXILIARY BLDG U1

RACEWAY ISOMETRIC DWG. ELE. 713' COND. #1PLC 61D

WATTS BAR NUCLEAR PLANT TVA/OC

ENGINEER: [signature] DATE: 8/28/85

VERIFICATION: [signature]

APPROVED: [signature]

DRAWING NO: NA EEB-EP-22.29 SAMPLE PROGRAM

OE: QA: CS

OE & QA SIGNATURES INDICATE ACCEPTANCE TO WORSE CASE CRITERIA

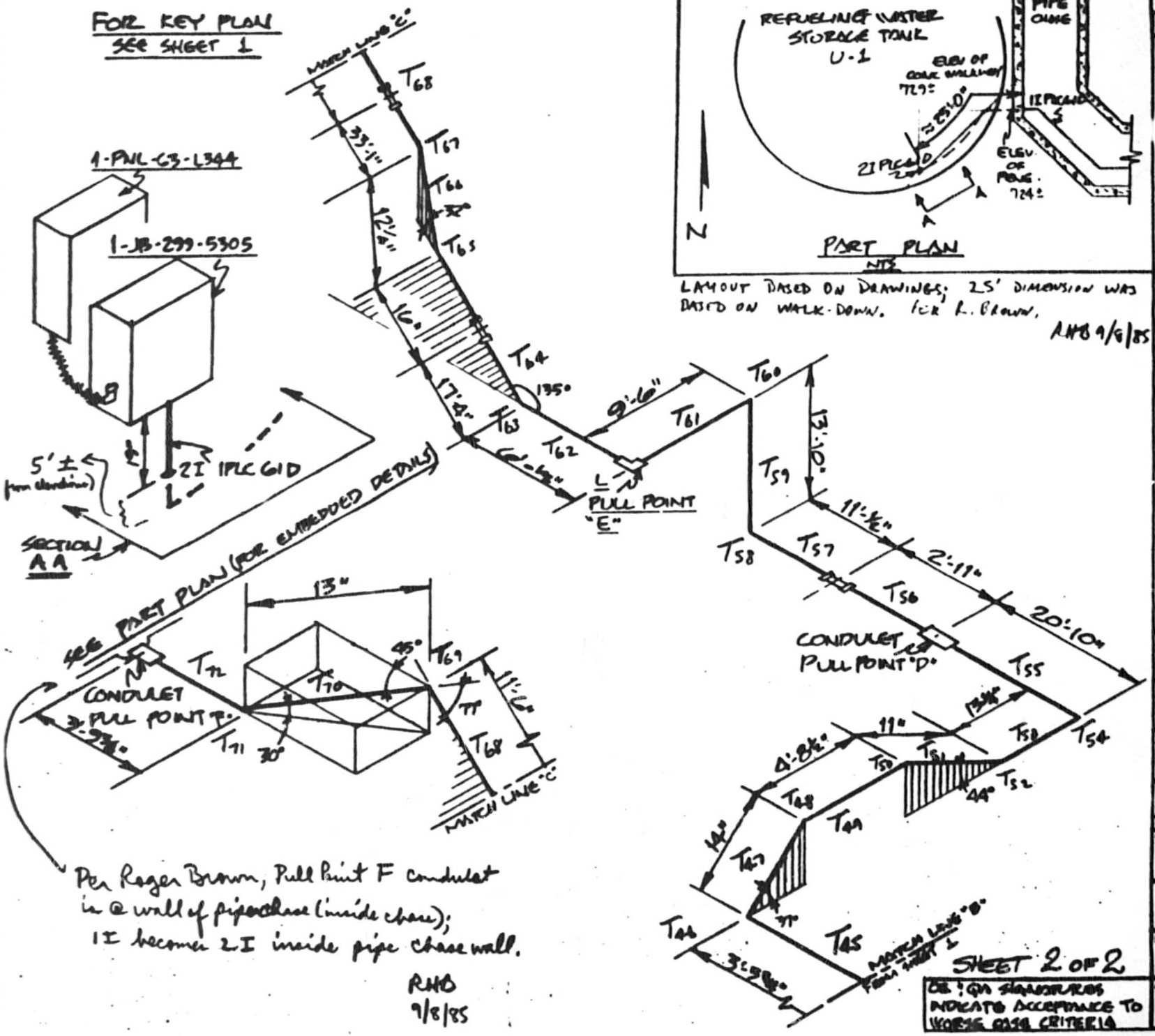

LAYOUT BASED ON DRAWINGS; 25' DIMENSION WAS BASED ON WALK-DOWN. FOR R. BROWN.

RHB 9/8/85

Per Roger Brown, Pull Point F condulet is @ wall of pipe chase (inside chase); 1I becomes 2I inside pipe chase wall.

RHB
9/8/85

SHEET 2 OF 2

OE & QA SIGNATURES INDICATE ACCEPTANCE TO WORSE CASE CRITERIA

NOTES:

1. ALL BENDS HAVE A RADIUS OF 5¾" UNLESS OTHERWISE NOTED. (1I) R_{2I} = 9.5"
2. TOLERANCES AS SPECIFIED BY EP 22.29
3. ALL BENDS NOT SPECIFIED ARE 90°
4.

CABLE UNID	MANU-FACTURER
1PM3870D	LATER

5. REF. DWG @ 15N810-21,44 45N824-2,3,9,28/45N822-6,8
6. ALL DIMENSIONS CL TO CL

AUXILIARY BLDG U-1

RACEWAY ISOMETRIC
DWG. ELE. 713 COND. @ 1PLC 61D

WATTS BAR NUCLEAR PLANT
TVA/OC

DRAWN BY: Marc Cook
DATE: 8/28/85

VERIFICATION: J.W. Rowe

APPROVED: [signature]

DRAWING NO: N/A GEB-EP-22.29 SAMPLE PROGRAM

OE: QA:

CONDUIT 1PLC-61D (one cable - instrumentation) SHEET 1 OF 4

$K = .3$

$W = .075$, $W_c = 1.0$

COMPUTED RHB DATE 9-8-85

CHECKED JRB DATE 9-17-85

PULL C to B

T_{32} Vert. Straight (Up) $T = LW = \left(2 + \frac{15.5}{12}\right) \times .075 = .25\#$

T_{31} Vert Bend (44°) $T = T_{32} e^{Kb} = .25\, e^{.3 \times .77} = .25 \times 1.26 = .31\#$

T_{30} Up Ramp (46°) $T = LW(\sin\alpha + K\cos\alpha) + T_{31}$
$= \frac{21.5}{12} \times .075(\sin 46° + .3\cos 46°) + .31 = .44\#$

T_{29} Vert. Bend (44°) $T = T_{30} e^{Kb} = .44\, e^{.3 \times .77} = .44 \times 1.26 = .55\#$

T_{28} Vert. Straight (Up) $T = LW + T_{29} = \frac{8.25}{12} \times .075 + .55 = 0.60\#$

T_{27} Vert. Bend (27°) $T = T_{28} e^{Kb} = .6\, e^{.3 \times .47} = .6 \times 1.15 = .69\#$

T_{26} Up Ramp (63°) $T = LW(\sin\alpha + K\cos\alpha) + T_{27}$
$= \frac{5}{12} \times .075(\sin 63° + .3\cos 63°) + .69 = .72\#$

T_{25} Vert. Bend (27°) $T = T_{26} e^{Kb} = .72\, e^{.3 \times .47} = .72 \times 1.15 = .83\#$

T_{24} Vert. Straight (Up) $T = LW + T_{25} = \frac{14}{12} \times .075 + .83 = .92\#$

T_{23} Vert. Bend (30°) $T = T_{24} e^{Kb} = .92\, e^{.3\pi/6} = .92 \times 1.17 = 1.08\#$

T_{22} Up Ramp (60°) $T = LW(\sin\alpha + K\cos\alpha) + T_{23}$
$= \frac{8.5}{12} \times .075(\sin 60° + .3\cos 60°) + 1.08 = 1.13\#$

T_{21} Vert Bend (30°) $T = T_{22} e^{Kb} = 1.13\, e^{.3\pi/6} = 1.13 \times 1.17 = 1.32\#$

T_{20} Vert. Straight (Up) $T = LW + T_{21} = \left(7 + \frac{4.25}{12}\right) \times .075 + 1.32 = 1.87\#$

T_{19} Vert. Bend (90°) $T = T_{20} e^{Kb} = 1.87\, e^{.3\pi/2} = 1.87 \times 1.60 = 3.00\#$

T_{18} Horiz. Straight $T = LWK + T_{19} = \left(5 + \frac{7}{12}\right) \times .075 \times .3 + 3.00 = 3.13\#$

T_{17} Horiz. Bend (90°) $T = T_{18} e^{Kb} = 3.13\, e^{.3\pi/2} = 3.13 \times 1.60 = 5.01\#$

TVA 11030 (WM 7-75)

COMPUTED RHG DATE 9-8-85
CHECKED JRB DATE 9-17-85

T_{16} Horiz. Straight $T = LWK + T_{17} = (2+\frac{1}{12}) \times .075 \times .3 + 5.01 = 5.06\#$

T_{15} Vert. Bend (29°) $T = T_{16} e^{Kb} = 5.06\, e^{.3 \times .51} = 5.06 \times 1.16 = 5.89\#$

T_{14} Down Ramp (29°) $T = LW(K\cos\alpha - \sin\alpha) + T_{15}$
$= \frac{7.5}{12} \times .075(.3\cos 29° - \sin 29°) + 5.89 = 5.88\#$

T_{13} Vert. Bend (29°) $T = T_{14} e^{Kb} = 5.88\, e^{.3 \times .51} = 5.88 \times 1.16 = 6.84\#$

T_{12} Horiz. Straight $T = LWK + T_{13} = (10+\frac{7}{12}) \times .075 \times .3 + 6.84 = 7.08\#$

$SWP_{CB} = T_{13}/R = 6.84/.435 = \boxed{15.72\ \#/ft}$

PULL D to C

T_{55} Horiz. Straight $T = LWK = (20+\frac{10}{12}) \times .075 \times .3 = .47\#$

T_{54} Horiz. Bend (90°) $T = T_{55} e^{Kb} = .47\, e^{.3\pi/2} = .47 \times 1.60 = .75\#$

T_{53} Horiz. Straight $T = LWK + T_{54} = \frac{13.25}{12} \times .075 \times .3 + .75 = .78\#$

T_{52} Vert. Bend (44°) $T = T_{53} e^{Kb} = .78\, e^{.3 \times .77} = .78 \times 1.26 = .98\#$

T_{51} Up Ramp (44°) $T = LW(\sin\alpha + K\cos\alpha) + T_{52}$
$= \frac{11}{12} \times .075(\sin 44° + .3\cos 44°) + .98 = 1.04\#$

T_{50} Vert Bend (44°) $T = T_{51} e^{Kb} = 1.04\, e^{.3 \times .77} = 1.04 \times 1.26 = 1.31\#$

T_{49} Horiz. Straight $T = LWK + T_{50} = (4+\frac{8.5}{12}) \times .075 \times .3 + 1.31 = 1.41\#$

T_{48} Vert. Bend (37°) $T = T_{49} e^{Kb} = 1.41\, e^{.3 \times .65} = 1.41 \times 1.21 = 1.72\#$

T_{47} Down Ramp (37°) $T = LW(K\cos\alpha - \sin\alpha) + T_{48}$
$= \frac{14}{12} \times .075(-\sin 37° + .3\cos 37°) + 1.72 = 1.69\#$

TVA 11080 (WM 7-75)

COMPUTED RHB DATE 9-8-85
CHECKED JRB DATE 9-17-85

T_{46} Horiz. Bend (90°) $T = T_{47} e^{Kb} = 1.69 e^{.3\frac{\pi}{2}} = 1.69 \times 1.60 = 2.71$

T_{45} Horiz. Straight $T = LWK + T_{46} = \left(3 + \frac{3\frac{3}{4}}{12}\right) \times .075 \times .3 + 2.71 = 2.78$

T_{44} Vert. Bend (46°) $T = T_{45} e^{Kb} = 2.78 e^{.3 \times .80} = 2.78 \times 1.27 = 3.54$

T_{43} Up Ramp (33°) $T = LW(\sin\alpha + K\cos\alpha) + T_{44}$
$= \frac{11.5}{12} \times .075(\sin 33° + .3\cos 33°) + 3.54 = 3.60$

T_{42} Vert Bend (46°) $T = T_{43} e^{Kb} = 3.6\, e^{.3 \times .80} = 3.6 \times 1.27 = 4.58$

T_{41} Horiz. Straight $T = LWK + T_{42} = \left(35 + \frac{13.25}{12}\right) \times .075 \times .3 + 4.58 = 5.39$

T_{40} Horiz. Bend (28°) $T = T_{41} e^{Kb} = 5.39\, e^{.3 \times .49} = 5.39 \times 1.16 = 6.24$

T_{39} Horiz. Straight $T = LWK + T_{40} = \frac{8}{12} \times .075 \times .3 + 6.24 = 6.26$

T_{38} Horiz. Bend (28°) $T = T_{39} e^{Kb} = 6.26\, e^{.3 \times .49} = 6.26 \times 1.16 = 7.26$

T_{37} Horiz. Straight $T = LWK + T_{38} = \frac{11}{12} \times .075 \times .3 + 7.26 = 7.28$

T_{36} Vert. Bend (22°) $T = T_{37} e^{Kb} = 7.28\, e^{.3 \times .38} = 7.28 \times 1.12 = 8.17$

T_{35} Up Ramp (22°) $T = LW(\sin\alpha + K\cos\alpha) + T_{36}$
$= \frac{21.5}{12} \times .075(\sin 22° + .3\cos 22°) + 8.17 = 8.26$

T_{34} Horiz. Bend (90°) $T = T_{35} e^{Kb} = 8.26\, e^{.3\pi/2} = 8.26 \times 1.60 = 13.24$

T_{33} Horiz. Straight $T = LWK + T_{34} = 1.75 \times .075 \times .3 + 13.24 = 13.28$

$SWP_{DC} = T_{34}/R - 13.24/.435$ $\boxed{30.44\ \#/ft}$ Worst Case

TVA 11030 (WM 7-75)

COMPUTED RHB DATE 9-8-85
CHECKED JRB DATE 9-17-85

PULL · E to F

T_{62} Horiz. Straight $T = LWK = \left(6+\frac{.5}{12}\right) \times .075 \times .3 = .14\#$

T_{63} Horiz. Bend (45°) $T = T_{62} e^{Kb} = .14\ e^{.3\pi/4} = .14 \times 1.27 = .17\#$

T_{64} Horiz. Straight $T = LWK + T_{63} = \left(17+\frac{20}{12}\right) \times .075 \times .3 + .17 = .59\#$

T_{65} Vert. Bend (32°) $T = T_{64} e^{Kb} = .59\ e^{.3 \times .56} = .59 \times 1.18 = .70\#$

T_{66} Up Ramp (32°) $T = LW(\sin\alpha + K\cos\alpha) + T_{65}$
$= \frac{12.25}{12} \times .075(\sin 32° + .3\cos 32°) + .70 = .76\#$

T_{67} Vert. Bend (32°) $T = T_{66} e^{Kb} = .76\ e^{.3 \times .56} = .76 \times 1.18 = .90\#$

T_{68} Horiz. Straight $T = LWK + T_{67} = \left(44+\frac{7}{12}\right) \times .075 \times .3 + .9 = 1.90\#$

T_{69} Vert. Bend (77°) $T = T_{68} e^{Kb} = 1.9\ e^{.3 \times 1.34} = 1.9 \times 1.50 = 2.85\#$

T_{70} Down Ramp (30°) $T = LW(K\cos\alpha - \sin\alpha) + T_{69}$
$= \frac{13}{12} \times .075(.3\cos 30° - \sin 30°) + 2.85 = 2.83\#$

T_{71} Vert. Bend (45°) $T = T_{70} e^{Kb} = 2.83\ e^{.3\pi/4} = 2.83 \times 1.27 = 3.58\#$

T_{72} Horiz. Straight $T = LWK + T_{71} = \left(3+\frac{9.75}{12}\right) \times .075 \times .3 + 3.58 = 3.66\#$

$SWP_{EF} = T_{71}/R = 3.58 / .435 = \boxed{8.23\ \#/ft}$

PULL: A to B, B to C, C to D, D to E, E to D, F to E, B to A, & Embedded Pull are all insignificant due to short runs, few bends +/or downward lengths. ∴ neglect.

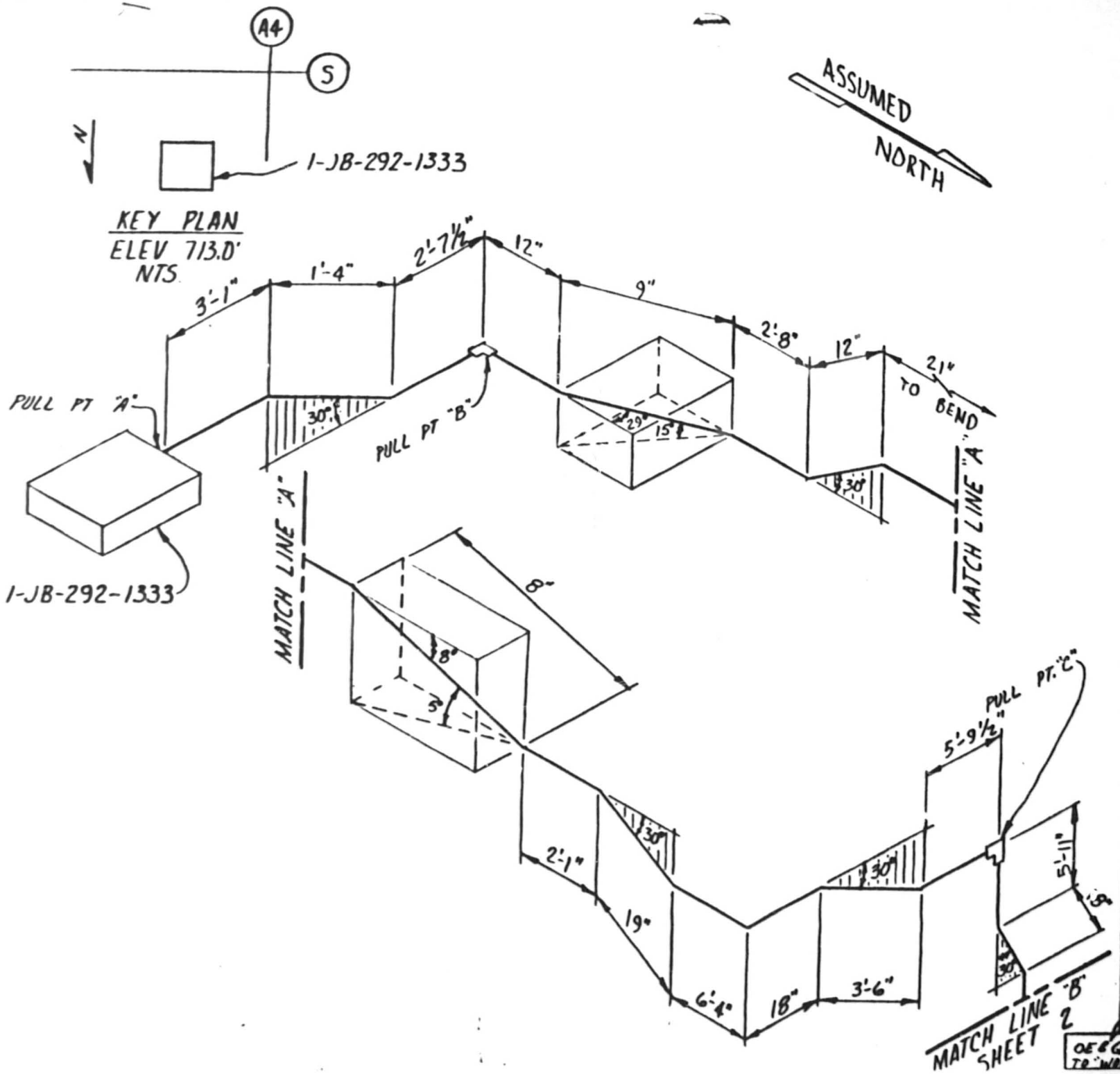

NOTES:

1. ALL BENDS HAVE A RADIUS OF 5¾" UNLESS OTHERWISE NOTED. (1"ØI CONDUIT)
2. TOLERANCES AS SPECIFIED BY EP-22.29
3. ALL BENDS NOT SPECIFIED ARE 90°
4.

CABLE UNID	MANU-FACTURER
1PM3877E	Later

5. REF. DWG # 45N824-1,-7, 45N822-6,-11 15W810-21,-30
6. ALL DIMENSIONS a to cl

AUX. BLDG / YARD UNIT 1

RACEWAY ISOMETRIC DWG. ELE. 713.0 COND. # 1PLC62E

WATTS BAR NUCLEAR PLANT
TVA/OC

ENGINEER: Roger A. Brown
DATE: 9-8-85

VERIFICATION: J.W. Nave

APPROVED:

DRAWING NO: E1PLC62E S.P. R.0

OE: J.A.B. Ward
QA: T.W. Rogers 9/9/85

OE & QA SIGNATURES INDICATE ACCEPTANCE TO "WORST CASE" CRITERIA.

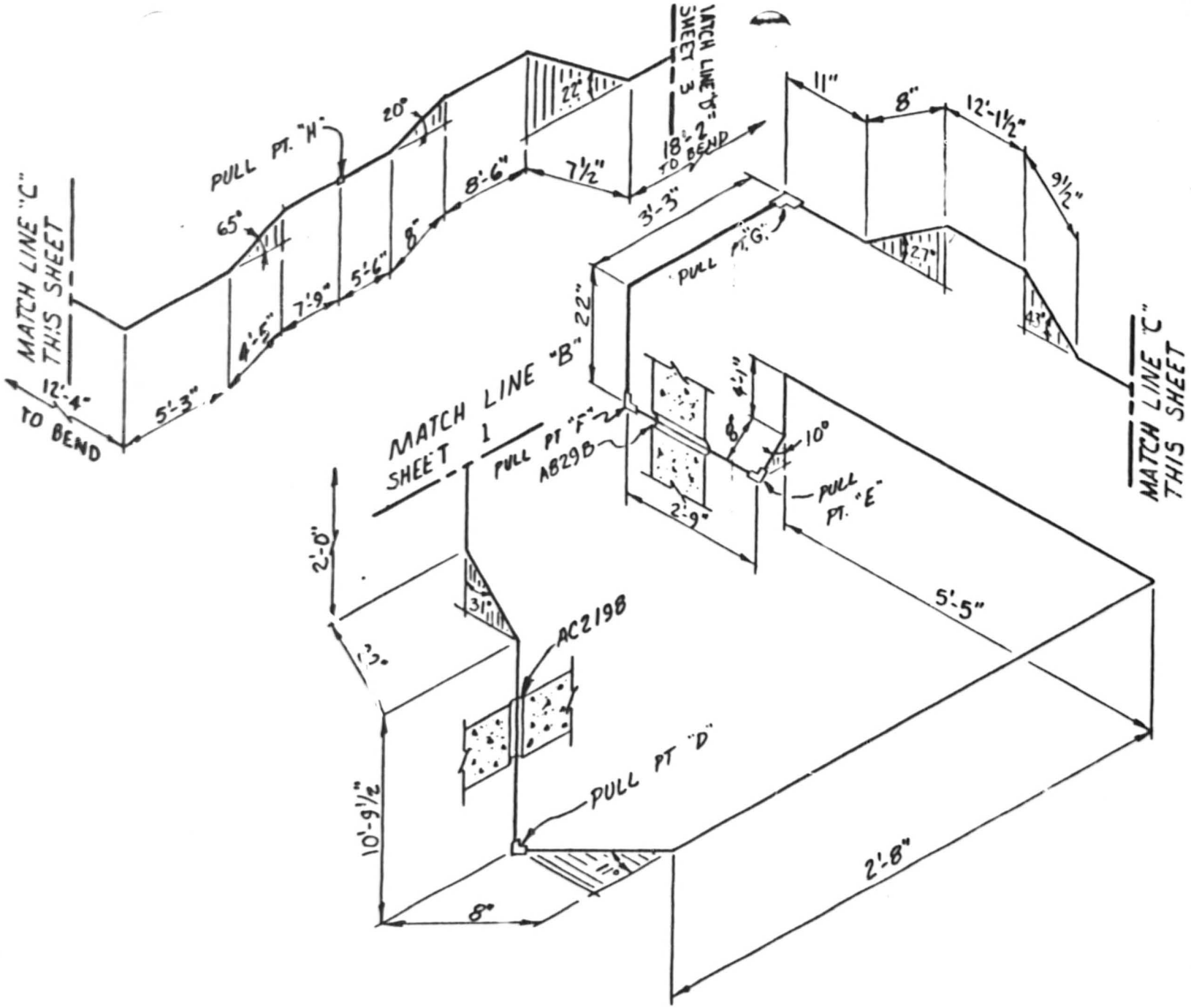

NOTES:

1. ALL BENDS HAVE A RADIUS OF 5¾" UNLESS OTHERWISE NOTED. (1"Ø I CONDUIT)
2. TOLERANCES AS SPECIFIED BY EP 22.29
3. ALL BENDS NOT SPECIFIED ARE 90°
4.

CABLE UNID	MANUFACTURER
1PM3877E	Rockbestos

5. REF. DWG # 45N824-1,-7, 45N822-6,-11, 15W810-21,-30
6. ALL DIMENSIONS ℄ TO ℄

AUX. BLDG. / YARD
UNIT 2

RACEWAY ISOMETRIC
DWG. ELE. 713.0 COND. @ 1PLCG2E

WATTS BAR NUCLEAR PLANT
TVA/OC

ENGINEER:	DATE:
Roger A. Brown	9-8-85

VERIFICATION: J.W. Rice

APPROVED: [signature]

DRAWING NO: E1PLCG2E S.P. R.O.

OE & QA SIGNATURES INDICATE ACCEPTANCE TO "WORST CASE" CRITERIA.

OE: [signature] QA: 9/9/85 G.W. Rogers

SHEET 2 OF 3

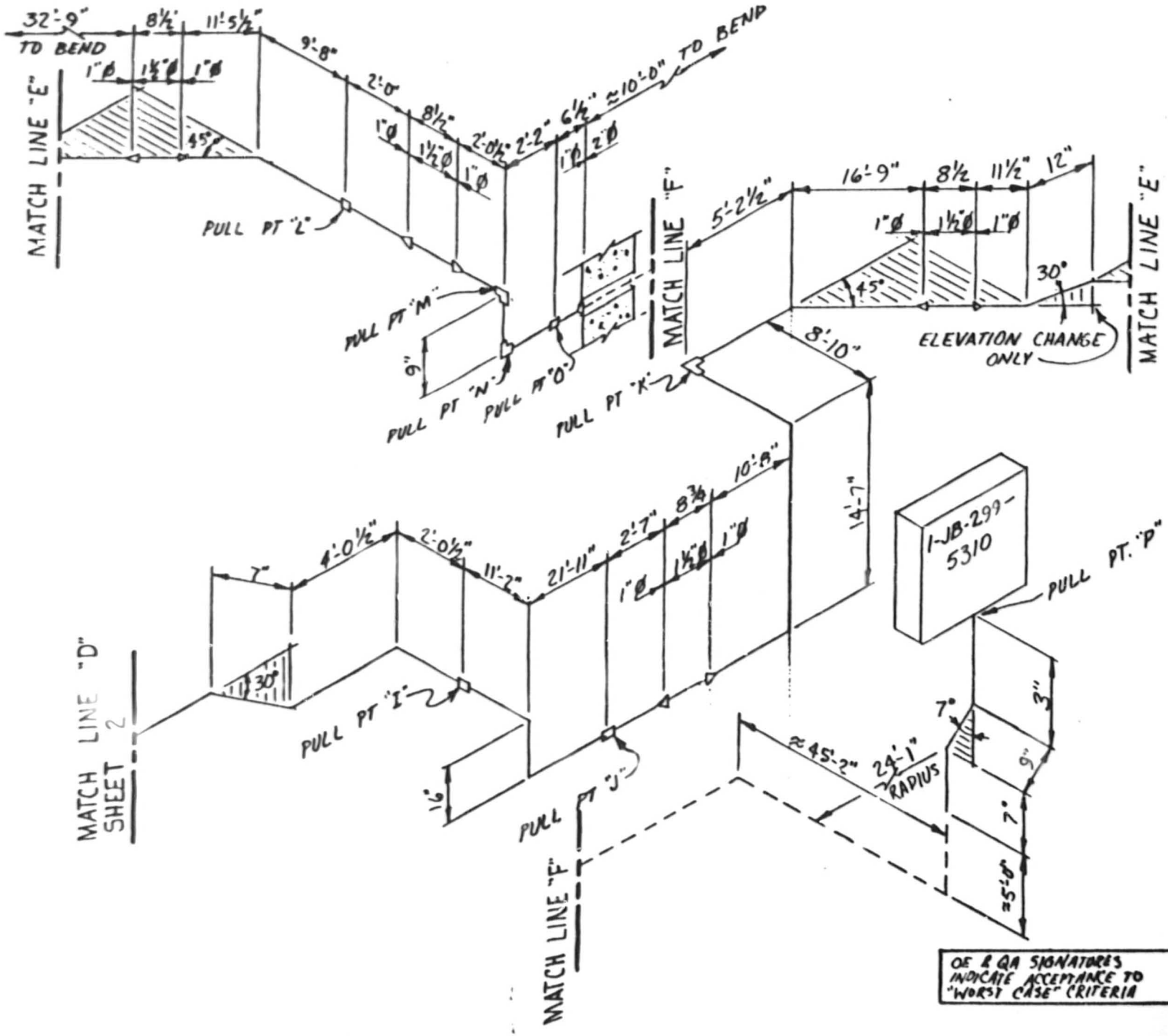

NOTES:

1. ALL BENDS HAVE A RADIUS OF 5¾" UNLESS OTHERWISE NOTED. (1"Ø I CONDUIT)
2. TOLERANCES AS SPECIFIED BY EP 22.29
3. ALL BENDS NOT SPECIFIED ARE 90°
4.

CABLE UNID	MANU-FACTURER
1PM3877E	Later

5 --- INDICATES EMBEDDED CONDUIT.
6 REF. DWG # 4SN824-1,-7, 4SN822-6,-11 1SN810-21,-30
7 ALL DIMENSIONS ℄ TO ℄

AUX. BLDG. / YARD UNIT 1

RACEWAY ISOMETRIC
DWG. ELE. 713.0' COND. # 1PLC62E

WATTS BAR NUCLEAR PLANT
TVA/OC

ENGINEER: Roger A. Brown
DATE: 9-8-85

VERIFICATION:

APPROVED:

DRAWING NO: E1PLC62E S.P.
R.0

OE & QA SIGNATURES INDICATE ACCEPTANCE TO "WORST CASE" CRITERIA

OE: L.A. Bulldoch
QA: A.W. Rogers 9/9/85

SHEET 3 OF 3

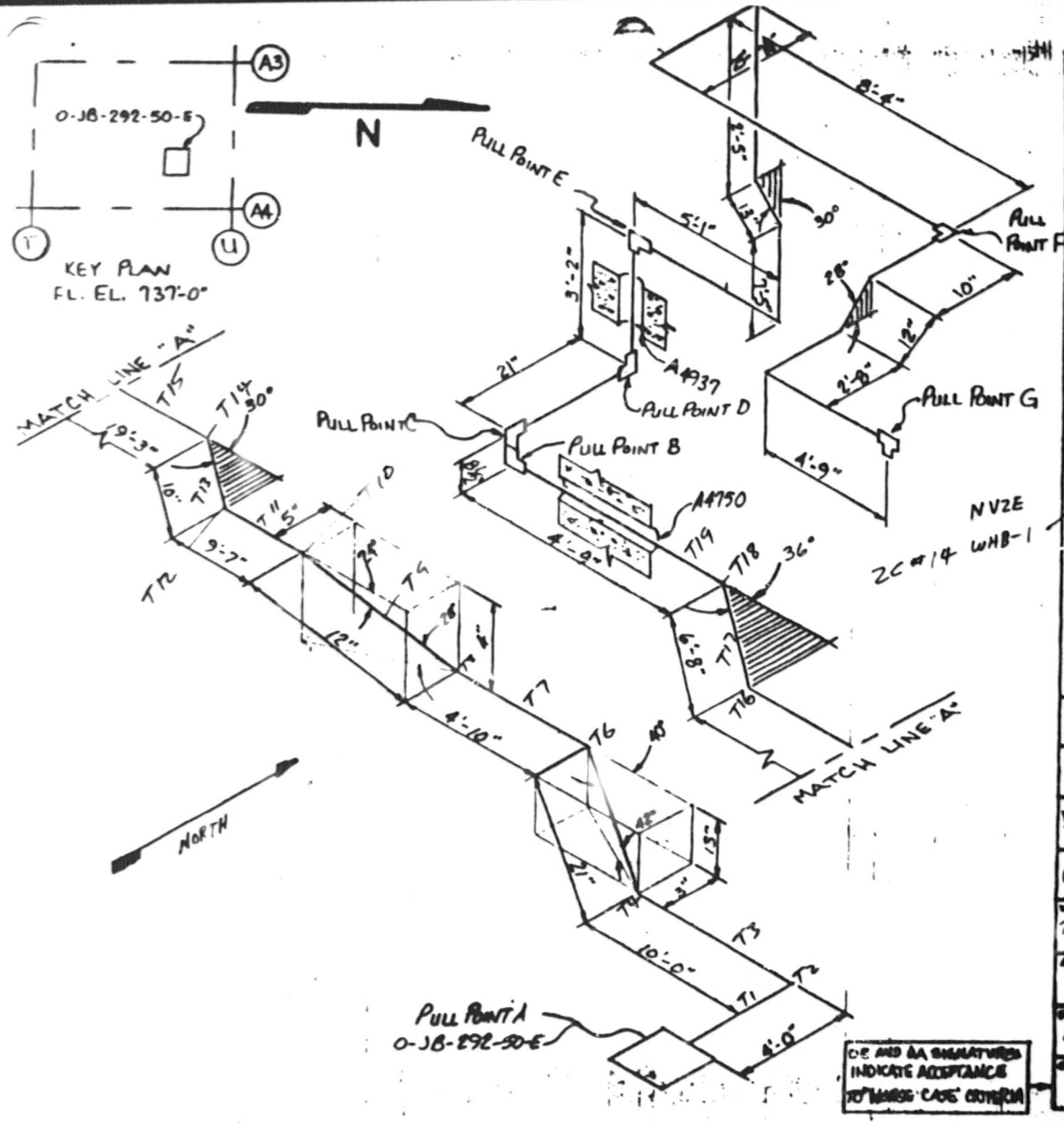

NOTES:

1. ALL BENDS HAVE A RADIUS OF 8.25" UNLESS OTHERWISE NOTED. (1½")
2. TOLERANCES AS SPECIFIED BY EP 22.29
3. ALL BENDS NOT SPECIFIED ARE 90°
4.

CABLE UNID	MANU-FACTURER
IPS 302E IPS 303E IPS 304E IPS 305E	LATER

5. REF. DWG #
45W828-17,1
45W826-8,6
6. ALL DIMENSIONS CL TO CL

AUX. BLDG.—UNIT 1

RACEWAY ISOMETRIC
DWG. ELE. 737 COND. @ IPS704E

WATTS BAR NUCLEAR PLANT
TVA/OC

Charles L. Cohen Jr. 9-6-85

U.D. [illegible] 9-6-85

APPROVED:

REFERENCE NO: NA
EEB-EP 22.29
SAMPLE PROGRAM

DE AND AA SIGNATURES INDICATE ACCEPTANCE TO "WORSE CASE" CRITERIA

9/9/85

IPS704E

TVA 468 (EN DES 3-77)

CONDUIT IPS 704E NV2E SHEET 1 OF 2

$D/d = 1.61/.304 = 5.21$ $w_c = 1.07$ $K = .32$

$w_c = 4 \times .070 = .28$

COMPUTED KTS DATE 9-13-85

CHECKED JRB DATE 9-16-85

pull A → B

T_1	Horizontal 4'-0"	$T = 4 \times .28 \times .32 = .36$
T_2	Bend 90°	$T = .36 e^{(1.57)(.32)} = .60$
T_3	Horizontal 10'-0"	$T = .60 + 10 \times .28 \times .32 = 1.49$
T_4	Bend 40°	$T = 1.49 e^{(.32)(.70)} = 1.87$
T_5	Straight run 21" slope up 42°	$T = (1.75)(.28)(.32 \cos 42° + \sin 42°)$ $T = 2.31$
T_6	Bend 40°	$T = 2.31 e^{(.32)(.70)} = 2.90$
T_7	Horizontal 4'-10"	$T = 2.90 + (4.83)(.28)(.32) = 3.33$
T_8	Bend 24°	$T = 3.33 e^{(.32)(.42)} = 3.81$
T_9	Straight run 12" slope up 28°	$T = 3.81 + (1)(.28)(.32 \cos 28° + \sin 28°)$ $T = 4.02$
T_{10}	Bend 24°	$T = 4.02 e^{(.32)(.42)} = 4.60$
T_{11}	Horizontal 9'-7"	$T = 4.60 + 9.58 \times .32 \times .28 = 5.46$
T_{12}	Bend 30°	$T = 5.46 e^{(.32)(.52)} = 6.46$
T_{13}	Horizontal 10"	$T = 6.46 + (\frac{10}{12})(.32)(.28) = 6.53$
T_{14}	Bend 30°	$T = 5.46 e^{(.32)(.52)} = 7.73$
T_{15}	Horizontal 19'-3"	$T = 7.73 + 19.25 \times .28 \times .32 = 9.45$
T_{16}	Bend 36°	$T = 9.45 e^{(.63)(.32)} = 11.56$
T_{17}	Horizontal 6'-8"	$T = 11.56 + (6.67)(.28)(.32)$ $T = 12.16$