http://www.ans.org/pubs/magazines/nn/docs/2006-1-3.pdf accessed 10-16-2008

Next-generation nuclear energy: The ESBWR

By David Hinds
and Chris Maslak

The latest article in Nuclear News's *long-running series on advanced reactor designs is a look at General Electric's Economic Simplified Boiling Water Reactor, which builds on innovations developed for the company's earlier ABWR and SBWR.*

General Electric's latest evolution of the boiling water reactor, the Economic Simplified Boiling Water Reactor (ESBWR), was officially docketed by the Nuclear Regulatory Commission on December 1, 2005, for design certification review. The new design combines improvements in safety with design simplification and component standardization to produce a safer, more productive, and more reliable nuclear power plant, with lower projected construction costs than plants in operation today.

The design certification application for the ESBWR was submitted to the NRC in August 2005 and was formally accepted for docketing in three months. Initial scheduling between the NRC and GE estimates completion of the preliminary safety evaluation report (SER) by 2007, which fits with current U.S. utility plans to submit combined construction/operating license (COL) applications in 2007 and 2008, based on GE's ESBWR technology. The new-plant review and licensing process has been improved, providing allowance for parallel reviews of the design certification and the COL, with a focus on standardization, and reducing and eliminating rereviews of the same open items. Based on recent licensing experience, final design approval can be expected about 15 months after the preliminary SER (or around December 2008), and formal design certification is typically 12 months after that time frame (or around December 2009).

The ESBWR program actually started in the early 1990s, when GE was developing the Simplified Boiling Water Reactor (SBWR). GE stopped this program because the power output of the SBWR was too small to generate the right economics for a new-build project. The program was still a success, however, because the design developed many of the passive safety technology developments that are being utilized in the ESBWR. By harnessing these design concepts and testing results from the original SBWR and construction and operating experience from the Advanced Boiling Water Reactor (ABWR), the ESBWR design team has produced a simplified reactor with a standardized design and first-rate economics (see Table I).

David Hinds is ESBWR Engineering Manager, and Chris Maslak is Nuclear Power Plants Marketing Leader, at General Electric Company.

Table I. Key Attributes of the ESBWR Program

Key Attribute	Elements of Attribute	Example Design Features
Simplification	• Reduced systems and structures • Simpler operation	• Passive safety systems • Natural circulation and elimination of recirculation pumps • Passive isolation condensers
Standardized design	• Standardized construction design	• Seismic design envelops all site conditions • Standardized components
Operational flexibility	• Increased operating margins	• Large vessel with large masses of water and steam • No regions of thermal hydraulic instability
Improved economics	• Low plant cost • Low development cost • Reduced licensing and first-of-a-kind plant cost • Reduced operation and maintenance costs	• Reduced materials and buildings • ABWR/SBWR features used • Tested new components and systems • Reduced and simpler systems • Reduced construction time

Significant simplification of plant systems is achieved in the ESBWR. As a result, operating and maintenance staff requirements are reduced, low-level waste generation is reduced, dose rates are reduced, operational reliability is improved, and plant safety and security are improved.

Each of these improvements provides distinct and unique advantages to the ESBWR design. First, fewer active components (in particular, active safety systems) reduce the maintenance and online surveillance requirements, thereby reducing operational exposure and dose rates. Second, fewer demands on plant operators and safety systems reduce plant operating staff requirements while still providing direct improvements in accident and transient response. Finally, reductions in building volumes and required manufactured components shorten the length of time needed for ESBWR construction, resulting in improved financial returns for plant owners.

Standardized construction design is another primary feature of the ESBWR. The effect is simplification in design and construction, reduced component sourcing requirements, and improvements in manufacturing time and component costs. Ultimately, the standardized design provides the basis for an improved licensing review process and the application of lessons learned in the construction and operation of follow-on units.

Even though the design is standardized, the ESBWR still allows for maximum operational flexibility, and many of the design features actually improve upon the margins already present in the operating fleet. For example, the standardized design meets a variety of grid requirements in a variety of locations. Other features, such as the large mass of water and steam in the reactor pressure vessel, help to limit the operational impact from transients. Margins are further improved by a reduction or elimination of transient initiators through features such as standby reactor feed pumps and full steam bypass capability.

The ESBWR's life-cycle economics are also improved through tangible reductions in permitting, licensing, construction, and operating costs. The design reduces the number of systems and components, while simultaneously utilizing processes and technologies from the already developed and operationally proven ABWR. In addition to reducing the technology risk, this approach keeps first-of-a-kind and follow-on development costs low, while still optimizing the use of the latest technology.

The use of the ABWR design and its applicability to the ESBWR has been a key

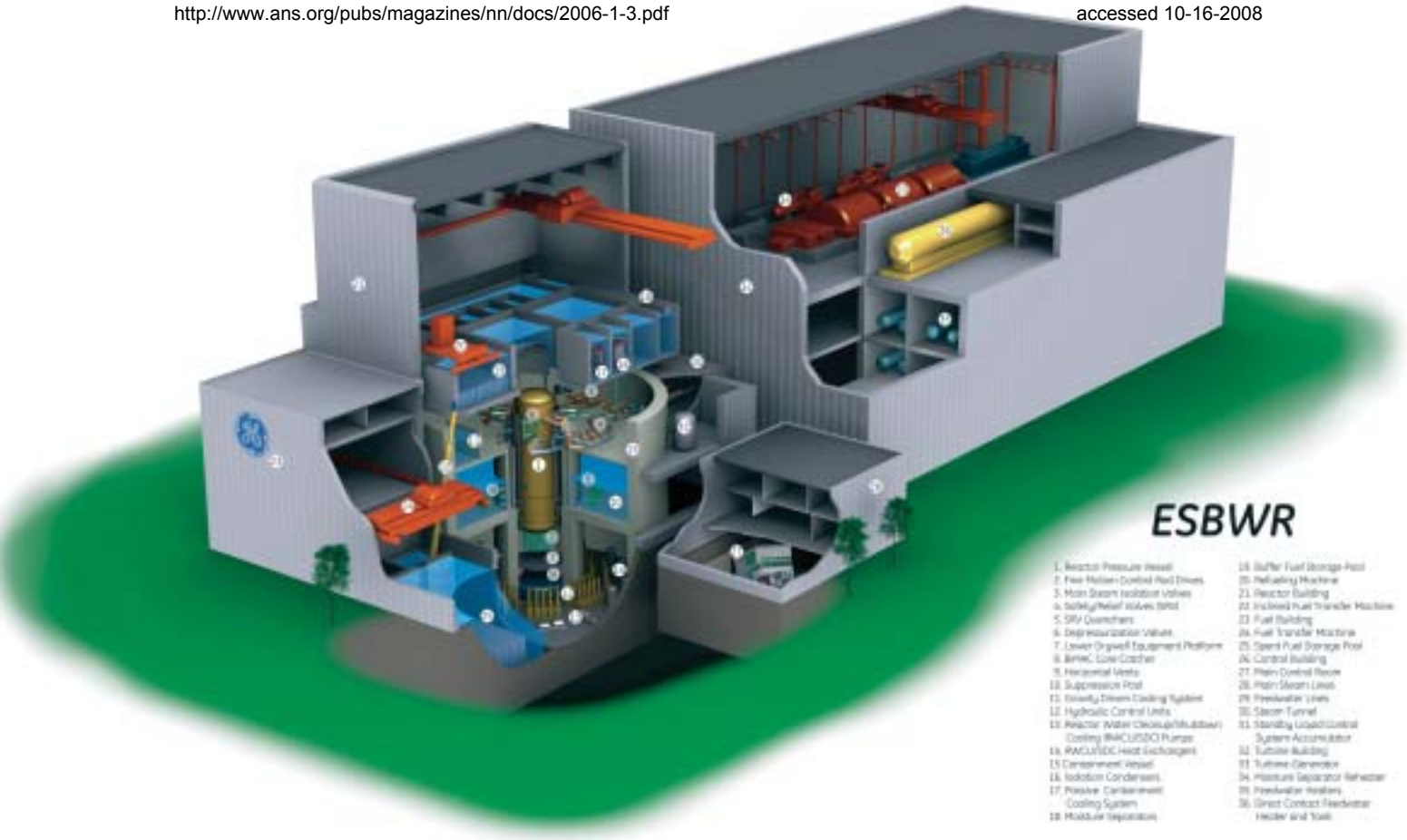

Fig. 1. Cutaway view of the ESBWR reactor and fuel, control, and turbine buildings

benefit for the design team. The fact that the ABWR design contains many technology advances and is proven in terms of construction schedule, cost, and operation has allowed the design team to benefit from this knowledge, applying design concepts with the confidence that proof from operation brings. The team hopes that this same level of confidence will help with the NRC review and with positive consumer opinion.

Design features

Overview

When comparing the key features of the ESBWR with those of previous BWR designs (Table II), there are many notable improvements. Natural circulation is achieved through an increase in vessel height and a decrease in active fuel height (relative to current plants). Passive safety features eliminate the need for safety-grade pumps and AC power. Design simplification also results in a reduction in building volume compared with the ABWR, even though generator output is increased by nearly 15 percent.

Normal plant operation

The ESBWR plant design relies on natural circulation and passive safety features, enhancing plant performance and simplifying the design. Natural circulation allows for the elimination of several systems (Table II), including recirculation pumps (and associated piping, valves, motors, and controllers), safety system pumps, and safety diesel generators.

Over the past 10 years, the 1550-MWe ESBWR has evolved from the original 670-MWe SBWR. The new design benefits from economy of scale while enhancing natural circulation core flow and retaining the original SBWR passive safety features, resulting in safety enhancements and economic improvements. The ESBWR's commercial attractiveness is delivered through a multipronged approach:

- Enhanced overall plant performance.
- Modular design of passive safety systems.
- The use of natural circulation.
- Increased output and reduction in overall material quantities.

Other key design features include:

- Opening the flow path between the downcomer and lower plenum.
- Shorter fuel, resulting in a reduced core pressure drop.
- Improved steam separator to reduce

TABLE II. COMPARISON OF KEY FEATURES

Parameter	BWR/4	BWR/6	ABWR	ESBWR
Power (MWt/MWe)	3293/1098	3900/1360	3926/1350	4500/1550
Vessel height/dia (m)	21.9/6.4	21.8/6.4	21.1/7.1	27.7/7.1
Fuel bundles, number	764	800	872	1132
Active fuel height (m)	3.7	3.7	3.7	3.0
Power density (kW/L)	50	54.2	51	54
Recirculation pumps	2 (external)	2 (external)	10 (internal)	0
Number/type of CRDs	185/LP	193/LP	205/FM	269/FM
Safety system pumps	9	9	18	0
Safety diesel generators	2	3	3	0
Alternate shutdown	2 SLC pumps	2 SLC pumps	2 SLC pumps	2 SLC accumulators
Control and instrumentation	Analog single channel	Analog single channel	Digital multiple channel	Digital multiple channel
Core damage (freq./yr)	10^{-5}	10^{-6}	2×10^{-7}	3×10^{-8}
Safety bldg vol (m^3/MWe)	120	170	180	130

http://www.ans.org/pubs/magazines/nn/docs/2006-1-3.pdf accessed 10-16-2008

TABLE III. COMPARISON OF SAFETY SYSTEMS

Function	Current BWR Reactors	ESBWR	
	Safety Systems	Safety Systems	Nonsafety
High-pressure inventory control	Motor and/or steam driven pumps with some vessel inventory loss and containment heat up	Isolation condensers conserve coolant inventory and avoid containment heat up	Multiple motor-driven pumps
Depressurization and low-pressure inventory control	Automatic depressurization system with complex cooling water systems	Diverse/redundant automatic depressurization system using pool with gravity flow for inventory control	Diesel generator–driven pumps
Containment decay Heat removal	Diesel generator–driven pumped systems with complex cooling water systems and ultimate heat sink	Completely passive condensers with simple transfer of heat to pools that can boil off to the atmosphere	DG-driven pumps and cooling water
Fission product control and off-site doses	Double containment barriers and motor-driven filter and purge systems	Numerous in-containment natural removal mechanisms	HVAC systems
Severe accident features	Inerting or igniters for hydrogen control and other features to limit corium impact. Containment vent added as backup in ABWR. Lower drywell flooder. External reactor building connection to RPV.	Inert containment	Core catcher and passive lower drywell flooder to limit corium impact and the ability to easily connect portable systems

pressure drops.

■ A tall chimney to enhance the thermal driving head for natural circulation flow (as opposed to tall upper plenum areas on previous designs).

The ESBWR draws upon proven ABWR technology and design. For example, it uses the same diameter reactor pressure vessel as the ABWR and some of the same internals. The original SBWR vessel internals were increased to the ABWR vessel diameter. As a result, the annulus size was verified for adequate water volume and flow, margins to thermal hydraulic instability were maintained, and other design limitations were evaluated. The ESBWR core was also increased in size by adding fuel assemblies to increase power level. Fuel height was decreased to 3.0 meters in order to achieve the appropriate pressure drop, while the power density was set to 54 kW/L. The core was increased from the 732 fuel assemblies in the SBWR to 1132 fuel assemblies in the ESBWR, resulting in a thermal power rating of 4500 MWt.

Plant safety systems

The ESBWR safety system design is extended to a higher power level by taking advantage of the modular design approach of the safety systems. The isolation condenser systems and the passive containment cooling system utilize simple heat exchangers, and therefore, any increase in power level requires only additional heat exchangers or tubes. The gravity-driven cooling system (GDCS) is not sensitive to power level, but rather volumes, and its capacity is primarily determined by containment geometrical considerations. Figure 2 illustrates the simplified schematic of the passive safety systems for the ESBWR. The ESBWR design demonstrates the change in philosophical safety approaches from those in use in current plants (Table III).

High- and low-pressure inventory control

The ESBWR uses isolation condensers for high-pressure inventory control and decay heat removal under isolated conditions. The isolation condenser system has four passive, independent high-pressure loops, each containing a heat exchanger that condenses steam on the tube side. The steam line connected to the vessel is normally open, and the condensate return line is normally closed. The four units are the same height as those previously tested for the SBWR. Responses to transients and accidents are first handled by nonsafety makeup systems, together with the isolation condensers. At high pressure, the nonsafety control rod drive pumps of the control rod drive system can add water directly to the reactor pressure vessel via a feedwater line.

Postulated loss-of-coolant accidents (LOCA) are mitigated in the ESBWR because the vessel can be depressurized rapidly to allow injection of low-pressure makeup water from multiple sources of safety and nonsafety systems. The passive safety-grade makeup water flows into the vessel by gravity from the GDCS, instead of the previous system of relying on pumps and their associated support systems. Depressurization valves depressurize the vessel in the event of a LOCA. The GDCS pool capacity is primarily determined by containment geometrical considerations and is sufficient to ensure a minimum water level of 1 meter above the core for at least 72 hours without operator action. This ensures that the core will not become uncovered during a LOCA.

Containment heat removal

The passive containment cooling system (PCCS), which includes six safety-related passive low-pressure loops, provides containment heat removal. Each loop consists of a heat exchanger open to the containment, a condensate drain line, and a vent discharge line submerged in the suppression pool. The six heat exchangers, similar in design to the isolation condensers, are located in cooling pools external to the containment. The PCCS and isolation condensers share the same water pools so that 72 hours of boil off is available for either long-term transients or accidents.

Buildings and structures

The simplifications in the ESBWR plant include a reduction in volume, due to the use of passive systems.

The primary safety-grade inventory control system—the isolation condenser—is a simple passive heat exchanger. The backup low-pressure inventory control system—the GDCS—has four separate, divisionally separated passive trains connected to three pools that provide sufficient cooling to keep the core covered. The passive containment decay heat removal system consists of modular heat exchangers, requiring no moving parts or valves. Most of the safety systems are either in the containment or directly above it.

Other systems in the plant are either nonsafety grade or fairly small. This allows a significant reduction in overall building volumes, especially for the expensive safety category buildings. A reduction in the reactor building volume and footprint has the added benefit of reducing the size of the building, which is on the critical path for construction. The safety building volume is about 15 percent less than that of the ABWR.

There are several security benefits resulting from the building design simplification. There are fewer buildings to patrol, reducing the overall security risk (including staff and equipment requirements). In addition, many of the critical systems are below grade, including the control room, spent fuel pool, radwaste collection and sample tanks, and the nuclear island personnel access tunnels between buildings.

The plant design has additional features that allow flexibility at different site locations. The ESBWR seismic design provides for multiple site soil conditions ranging from soft soil to hard rock, along with several specific site seismic conditions and require-

http://www.ans.org/pubs/magazines/nn/docs/2006-1-3.pdf accessed 10-16-2008

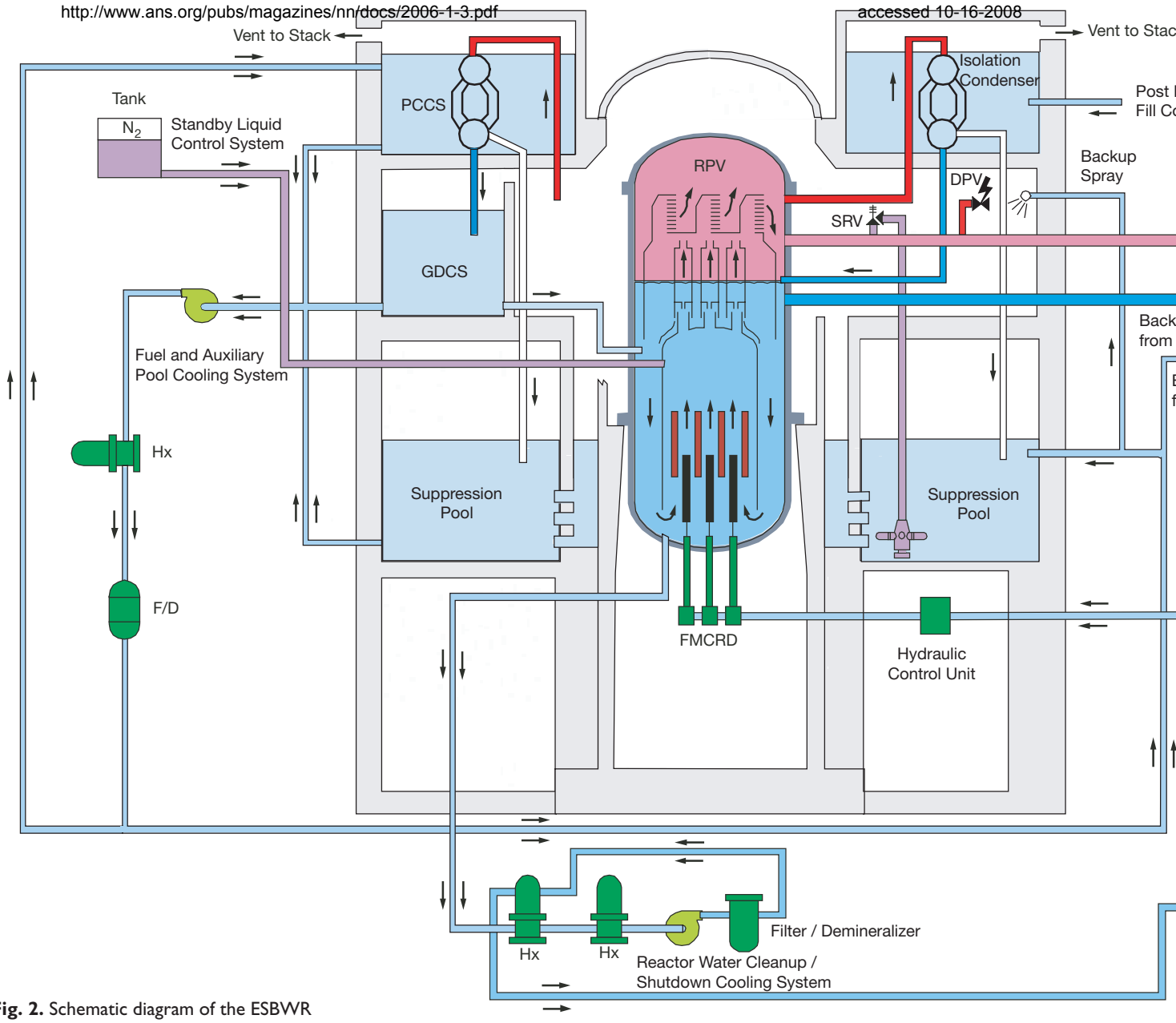

Fig. 2. Schematic diagram of the ESBWR

ments. The design accounts for all anticipated external events involving severe accident requirements by various safety authorities.

Plant performance

Substantial enhancement of overall plant performance is achieved through the key design features previously described, along with the use of the latest fuel designs. Natural circulation significantly improves key performance parameters, while keeping others within the same range as those on forced circulation plants. In addition, certain design changes in the ESBWR allow an increase in power level from the SBWR, without a decrease in margins. An explanation of these items is as follows:

1. Significant bundle natural circulation flow in the ESBWR is due to the unrestricted downcomer area and shorter core, tall chimney above the core, and improved low-pressure drop separator configuration. The ESBWR's natural circulation flow is nearly comparable to that of forced circulation BWRs.

2. A reactor is generally more stable with a lower power/flow ratio. The ESBWR power/flow ratio is comparable to that of operating BWRs, which have extended operating domains. This is because the power per bundle is lower for the ESBWR and the natural circulation flow is increased, as previously described.

3. A slower pressurization rate in the ESBWR is a result of the large steam volume in the chimney and the use of isolation condensers. Because of the slower pressurization rate and the use of isolation condensers, there is adequate margin to prevent any safety relief valves from opening during anticipated operational occurrences. This is a significant improvement from currently operating BWRs.

4. Lower personnel dose levels are a result of improved system design, reduced maintenance requirements, and reduced surveillance testing requirements due to the passive systems, especially those within containment. The elimination of the reactor recirculation pumps and associated heat exchangers removes all associated maintenance on potentially contaminated motors, valves, and heat exchangers. The use of fine motion control rod drives also reduces personnel dose significantly, since only two or three need to be inspected and maintained during each outage. New system designs and pipe routings eliminate the need for most crud traps. The selection of materials to eliminate or minimize cobalt content, the increased use of stainless steel, and state-of-the-art water chemistry practices have reduced piping and equipment radiation sources. Systems with the potential for radioactive contamination are designed for

http://www.ans.org/pubs/magazines/nn/docs/2006-1-3.pdf accessed 10-16-2008

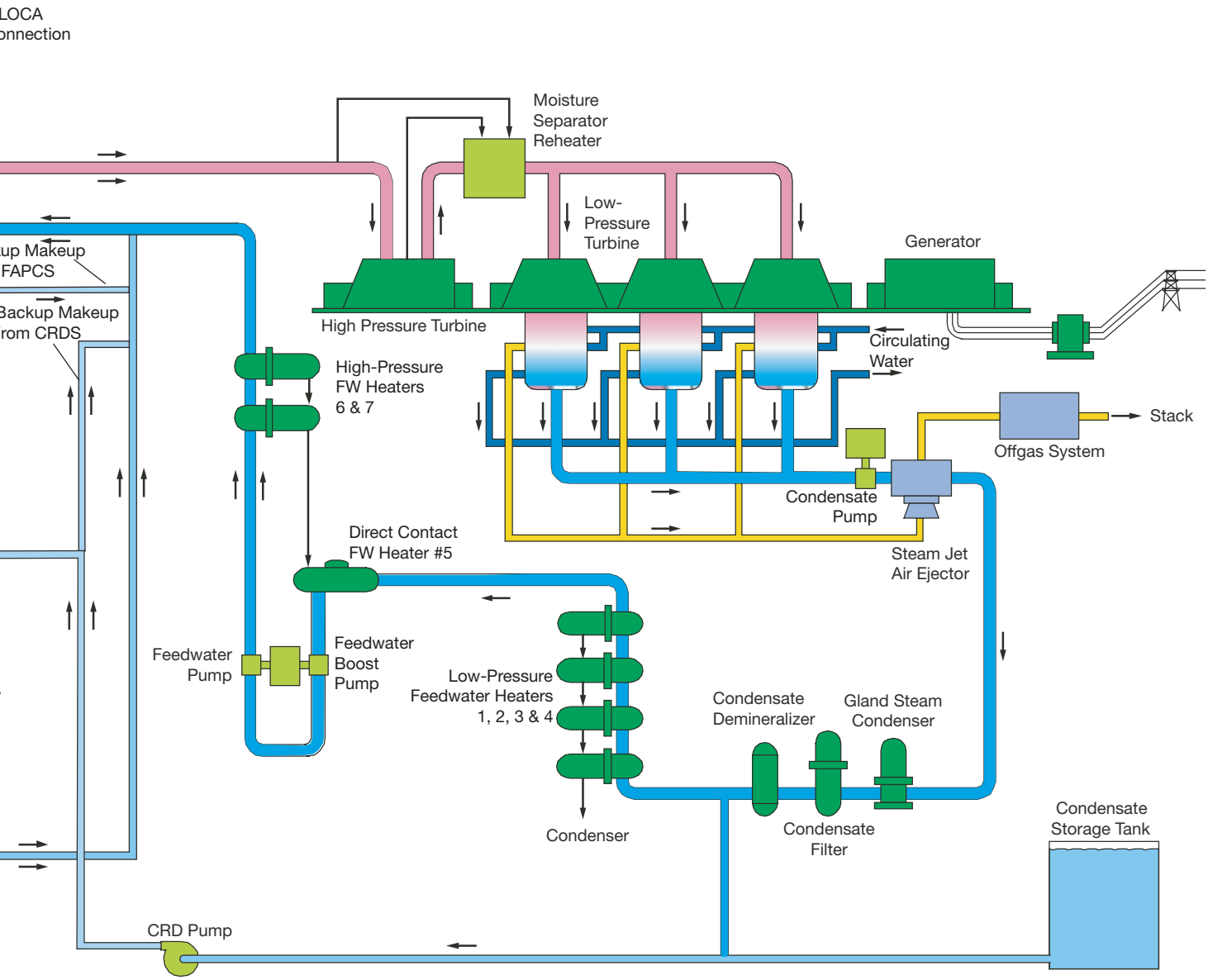

draining, flushing, and decontaminating to reduce dose levels. The ESBWR also uses epoxy-type wall and floor coverings, providing smooth surfaces that make decontamination easier and ensure that radiation levels are as low as reasonably achievable (ALARA) throughout the plant.

5. Reduced low-level waste production is a result of fewer ESBWR maintenance activities. Simplification and the elimination of numerous active systems result in less outage work, lower total worker dose, and decreased low-level solid waste generation. The ESBWR solid waste management system segregates and packages the reduced levels of wet and dry radioactive solid waste for off-site shipment and burial. This segregation allows for efficient processing and minimizes the overall amount of solid waste requiring disposal.

6. The water level always covers the core owing to larger in-vessel water inventory and large-capacity GDCS pools for makeup inventory, which provide improved safety margins.

7. The containment heat removal, via the PCCS heat exchangers, is completely passive and cannot be inhibited. The water available on the secondary side is sufficient for 72 hours with no operator actions following any accident, and there are simple, hard-piped connections to permit refill from on-site or off-site resources.

8. Even if very low probability, common-mode failures result in core damage (estimated to be 3×10^{-8}/yr), the presence of a designed core catcher (BiMAC) and a diverse flooding system for the lower drywell will terminate any containment degradation. This, along with the PCCS, results in a containment that will not fail in the event of a severe accident.

9. The inclusion of the 110 percent steam bypass, along with the capability for island mode operation, results in increased plant operating flexibility, faster return to service, and improved forced outage rate in the event of a turbine trip, load rejection, or grid failure. The ESBWR can handle a full load rejection and turbine trip without a reactor scram. This ensures that once the failure is corrected, the plant is quickly returned to full power. In addition, if a complete grid collapse occurs, the ESBWR is designed to isolate from the grid, reduce core thermal power in a controlled fashion, and reduce turbine generator output to provide only house loads.

The major advantage of the increased margins is the added flexibility the ESBWR plant design gives the plant operator. The operator can use these margins in a number of different ways. For example, an operator may choose to optimize fuel management and provide more stable plant operations.

Continued

http://www.ans.org/pubs/magazines/nn/docs/2006-1-3.pdf accessed 10-16-2008

ESBWR technology basis

The ESBWR plant design has been simplified through the innovative adaptations of proven operating plant systems, such as combining the shutdown cooling and reactor water cleanup systems. In some cases, the range of applicability of concepts has been extended (for example, through natural circulation and isolation condensers). Some of the earliest BWRs were natural circulators—for example, Dodewaard, Humboldt Bay, and the Japan Power Demonstration Reactor. In fact, Dodewaard, a 60-MWe natural circulation reactor in Holland, operated successfully for more than 25 years before shutting down. Isolation condensers continue to be used in some BWR plants (Oyster Creek and Nine Mile Point).

The only major new system in the design is the PCCS. There is, therefore, high confidence that the design will prove to be successful for the following reasons:

- Features that have been successfully used before in operating BWRs are included in the ESBWR (natural circulation, isolation condensers).
- Standard systems are utilized in the ESBWR where practical. Features in common with the ABWR are vessel size, fine motion control rod drives, main control room digital designs, pressure suppression containment, fuel designs, materials, and chemistry (Table IV).
- Components are specified for use within the range of previous test data (e.g., fuel and separators).
- Extensive separate effects, component, and integral tests have been performed for the ESBWR at different scales.
- New ESBWR components have been tested and proven (squib-actuated depressurization valves, IC heat exchangers, wetwell/drywell vacuum breakers, PCCS).

The basic technology for the safety systems included in the ESBWR was developed over many years for the SBWR design. The SBWR program involved scaling studies, separate effects tests, and component and integral tests in many countries and at different scales. These tests were reviewed and approved by regulators. It is highly likely that these tests are the most extensive and comprehensive ever run for the qualification of safety systems for a nuclear power plant design.

As a result, the ESBWR program inherited a technologically rich legacy of design, development, and analysis work passed along from the SBWR and ABWR programs. No new systems were designed for the ESBWR, although some systems required duty or rating increases to adjust to a higher power level, and many other systems simply needed another duplicate equipment train.

Instrumentation and control design for the ESBWR has been developed from the ABWR. Plant electrical (although significantly simplified), cooling water, and heat cycle systems all benefited from the ongoing systems work under way on all of GE's ABWR design activities, including the work used on the dual-unit ABWR currently under construction at Lungmen, in Taiwan.

Looking forward

GE is participating with NuStart and Dominion Resources, both of which selected ESBWR technology, in the Department of Energy's Nuclear Power 2010 program, which was established by the DOE to act as a catalyst for new-build nuclear energy in the United States, thereby helping the United States meet long-term demand for electrical power generation. A number of utilities will be preparing ESBWR COLs for submittal in 2007 and 2008. Once approved, a COL allows a utility to commence construction, followed by plant startup and commercial operation. Based on current schedules, this could mean operational ESBWR plants in the United States as early as 2014 and 2015.

The ESBWR is rich in operating experience and history from the BWRs and ABWRs in operation around the world today, and it benefits from the design and testing of the SBWR program developed in the 1990s. The ESBWR is designed to meet the needs of nuclear power plant owners today and into the future, with a 60-year design life. Through design simplification and standardization, the ESBWR offers improved safety, increased reliability, and ease of operation. And, compared to current nuclear power plants, the ESBWR requires only a fraction of traditional plant operating and maintenance staff and offers faster and lower-cost construction, while also reducing operational costs.

It is not surprising, therefore, that GE's ESBWR design team is already proud of the reactor design and excited about the opportunities that lie ahead. NN

TABLE IV. FEATURES AND TECHNOLOGY COMMON TO ABWR AND ESBWR

- Materials and water chemistry
- RPV design and fabrication
- Fine motion control rod drives
- Digital instrumentation and control
- Multiplexing and fiber-optic data transmission
- Control room design
- Plant layout for ease of maintenance
- Reinforced concrete containment technology
- Pressure suppression horizontal vents
- Computer codes and analytical methods
- Information management technology