9.5 Other Auxiliary Systems

9.5.1 Fire Protection System

The primary objectives of the AP1000 fire protection program are to prevent fires and to minimize the consequences should a fire occur. The program provides protection so that the plant can be shut down safely following a fire. The fire protection system (FPS) detects and suppresses fires, and is an integral part of the AP1000 fire protection program. The AP600 fire protection system was licensed as part of 10CFR52, Appendix C, AP600 Design Certification. Since AP1000 is very similar to AP600, the basis for the AP1000 fire protection system is that of AP600. The AP1000 compliance with BTP CMEB 9.5-1 is the same as for AP600.

9.5.1.1 Design Basis

9.5.1.1.1 Safety Design Basis

To achieve the required high degree of fire safety, and to satisfy fire protection objectives, the AP1000 is designed to:

- Prevent fire initiation by controlling, separating, and limiting the quantities of combustibles and sources of ignition
- Isolate combustible materials and limit the spread of fire by subdividing plant buildings into fire areas separated by fire barriers
- Separate redundant safe shutdown components and associated electrical divisions to preserve the capability to safely shut down the plant following a fire
- Provide the capability to safely shut down the plant using controls external to the main control room, should a fire require evacuation of the control room or damage the control room circuitry for safe shutdown systems
- Separate redundant trains of safety-related equipment used to mitigate the consequences of a design basis accident (but not required for safe shutdown following a fire) so that a fire within one train will not damage the redundant train
- Prevent smoke, hot gases, or fire suppressants from migrating from one fire area to another to the extent that they could adversely affect safe shutdown capabilities, including operator actions
- Provide confidence that failure or inadvertent operation of the fire protection system cannot prevent plant safety functions from being performed
- Preclude the loss of structural support, due to warping or distortion of building structural members caused by the heat from a fire, to the extent that such a failure could adversely affect safe shutdown capabilities

- Provide floor drains sized to remove expected firefighting water flow without flooding safety-related equipment
- Provide firefighting personnel access and life safety escape routes for each fire area
- Provide emergency lighting and communications to facilitate safe shutdown following a fire
- Minimize exposure to personnel and releases to the environment of radioactivity or hazardous chemicals as a result of a fire

The fire protection system is classified as a nonsafety-related, nonseismic system. Special seismic design requirements are applied to portions of the standpipe system located in areas containing equipment required for safe shutdown following a safe shutdown earthquake, as described in subsection 9.5.1.2.1.5. In addition, the containment isolation valves and associated piping for the fire protection system are safety-related (Safety Class 2) and seismic Category I. The fire protection system is not required to remain functional following a plant accident or the most severe natural phenomena, except as indicated below for a safe shutdown earthquake.

The fire protection system is designed to perform the following functions:

- Detect and locate fires and provide operator indication of the location
- Provide the capability to extinguish fires in any plant area, to protect site personnel, limit fire damage, and enhance safe shutdown capabilities
- Supply fire suppression water at a flow rate and pressure sufficient to satisfy the demand of any automatic sprinkler system plus 500 gpm for fire hoses, for a minimum of 2 hours
- Maintain 100 percent of fire pump design capacity, assuming failure of the largest fire pump or the loss of offsite power
- Following a safe shutdown earthquake, provide water to hose stations for manual firefighting in areas containing safe shutdown equipment
- Satisfy the requirements of the passive containment cooling system as an alternate source of water to wet the containment dome or to refill the passive containment cooling water storage tank after a loss-of-coolant accident, if the fire protection system is available
- Provide an alternate supply of cooling water to the normal residual heat removal system heat exchanger after a loss of normal component cooling water system function.
- Provide nonsafety-related containment spray capability for severe accident management.

9.5.1.1.2 Power Generation Design Basis

AP1000 fire prevention, control, detection, and suppression features provide plant and personnel safety. The fire protection analysis (see Appendix 9A) evaluates the adequacy of fire protection for systems and plant areas important to the generation of electricity.

9.5.1.1.3 Nonsafety-Related Containment Spray Function

The fire protection system provides a nonsafety-related containment spray function. This function is discussed in subsection 6.5.2.

9.5.1.2 System Description

9.5.1.2.1 General Description

The fire protection program and the design of the fire protection system conform to the applicable codes and standards listed in Section 3.2, and the following:

- 10 CFR 50.48, Fire Protection (Reference 15)
- General Design Criterion 3, Fire Protection (Reference 16)
- SECY-93-087, Section I.E., Fire Protection (Reference 17)

Table 9.5.1-1 is a point-by-point description of the conformance of the fire protection program with the guidelines of Branch Technical Position (BTP) CMEB 9.5-1 (Reference 1). AP1000 meets the enhanced fire protection provisions of SECY-93-087 as demonstrated in the fire protection analysis (Appendix 9A).

The plant includes features to minimize the likelihood that a fire will occur and to limit the spread of fire.

The fire protection system detects fires and provides the capability to extinguish them using fixed automatic and manual suppression systems, manual hose streams, and/or portable firefighting equipment. The fire protection system consists of a number of fire detection and suppression subsystems, referred to as systems, including:

- Detection systems for early detection and notification of a fire
- A water supply system including the fire pumps, yard main, and interior distribution piping
- Fixed automatic fire suppression systems
- Manual fire suppression systems and equipment, including hydrants, standpipes, hose stations and portable fire extinguishers

The fire detection and suppression systems are described later in this subsection.

9.5.1.2.1.1 Plant Fire Prevention and Control Features

Architectural and Structural Features

Plant buildings use noncombustible structural materials, primarily reinforced concrete, gypsum, masonry block, structural steel, steel siding, and concrete/steel composite material. Fireproofing of structural steel is not normally required, but the effects of heat generated by a fire are considered in the design. Localized structural steel fireproofing is provided as required, based on a realistic analysis of the time-temperature fire effects on the structural members. Heat transfer analyses based on the postulated fire are used to determine whether the fire will heat the structural members to a specified critical temperature. Where structural failures could adversely affect safe shutdown capabilities, this analysis of the fire resistance of structural steel members establishes the need for fireproofing.

Firefighting personnel access routes and life safety escape routes are provided for each fire area. Fire exit routes are clearly marked.

Buildings outside primary containment generally have two enclosed stairways for emergency access. Stairwells serving as escape routes, access routes for firefighting, or access routes to areas containing equipment necessary for safe shutdown of the plant are equipped with emergency lighting. Such stairwells, and elevator shafts, which penetrate fire barrier floors, are enclosed in towers. The majority of the stairwell towers in the auxiliary building contain both concrete structural walls and nonstructural walls, consisting of a concrete/steel composite material having a fire resistance rating of at least 2 hours. The fire-resistance rating is based on material testing conducted in accordance with ASTM E-119 and NFPA 251. These auxiliary building stairwells are protected from potential missiles by other structures or by the selection of the location of the stairwell remote from potential missile sources. Openings are protected with approved automatic or self-closing doors having a rating of 1.5 hours.

Some of the walls of the turbine building and annex building stairwell enclosures, which are exposed to the interior of the buildings, are also constructed with a concrete/steel composite material. However, the turbine building and annex building stairwell enclosure walls that face the yard area are constructed with an exterior siding common to the overall siding used for the turbine and annex buildings.

The main control room is designed to permit rapid detection and location of fires in the underfloor and ceiling spaces and allow ready access for manual firefighting. Due to the need to provide passive cooling capability into the main control room ceiling, it will not be protected against fires from within the main control room. The ceiling will be a fire barrier from fires in the room above the main control room.

Plant Arrangement

The plant is subdivided into fire areas to isolate potential fires and minimize the risk of the spread of fire and the resultant consequential damage from corrosive gases, fire suppression agents, smoke, and radioactive contamination.

Some fire areas are subdivided into fire zones to permit more precise identification of the type and locations of combustible materials, fire detection, and suppression systems. The subdivision into fire zones is based on the configuration of interior walls and floor slabs, and the location of major equipment within each fire area.

Fire barriers are provided in accordance with BTP CMEB 9.5-1. Three-hour fire barriers are non-combustible and surround fire areas containing safety-related components. The resistance of fire barriers in nonsafety-related areas of the plant may be less than 3 hours, where justified by the fire protection analysis (Appendix 9A).

Three-hour fire barriers provide complete separation of redundant safe shutdown components, including equipment, electrical cables, instrumentation and controls, except where the need for physical separation conflicts with other important requirements, specifically:

- Fire barrier separation is not provided within the main control room fire area because functional requirements make such separation impractical. The risk of fires in the control room is minimized by the reduction in the quantity of electrical cables. Continuous occupancy provides confidence that fires would be quickly detected and suppressed. Should a fire require evacuation of the main control room, the plant can be safely shut down using independent controls at the remote shutdown workstation, located in a separate fire area.

- Fire barrier separation is not provided between the main control room and the room above it from fires in the main control room. There are no safe shutdown components in the room above. There is fire barrier separation between the main control room and the room above it for fires in the room above.

- Fire barrier separation is not provided within the remote shutdown room fire area because the remote shutdown workstation is not required for safe shutdown unless a fire requires evacuation of the main control room.

- Complete fire barrier separation necessary to define a fire area is not provided throughout the primary containment fire area (including the middle and upper annulus zones of the shield building) because of the need to satisfy other design requirements, such as allowing for pressure equalization within the containment following a high-energy line break. Fire protection features and equipment arrangement which define fire zones within the containment fire area provide confidence that at least one train of safe shutdown equipment will remain undamaged following a fire in any fire zone. The quantity of combustible materials is minimized. The use of sealless reactor coolant pump motors has eliminated the need for an oil lubrication system. Redundant trains of safe shutdown components are separated whenever possible by existing structural walls, or by distance. Selected cables of a safety-related division which pass through a fire zone of an unrelated division are protected by fire barriers. The fire protection system provides appropriate fire detection and suppression capabilities.

Outside of the primary containment and the main control room, the arrangement of plant equipment and routing of cable are such that safe shutdown can be achieved with all components (except those protected by 3-hour fire barriers) in any one fire area rendered inoperable by fire.

Openings and penetrations through fire barriers are protected in accordance with the guidelines of BTP CMEB 9.5-1.

The fire protection analysis contains a description of plant fire areas, fire zones, fire barriers, and the protection of fire barrier openings, as well as a description of the separation between redundant safe shutdown components.

Electrical Cable Design, Routing, and Separation

Electrical cable (including fiber optic cable) and methods of raceway construction are selected in accordance with BTP CMEB 9.5-1. Metal cable trays are used. Rigid metal conduit or metal raceways are used for cable runs not embedded in concrete or buried underground. Flexible metallic tubing is used in short lengths for equipment connections.

The insulating and jacketing material for electrical cables are selected to meet the fire and flame test requirements of IEEE Standard 1202 (Reference 18) or IEEE Standard 383 (Reference 3) excluding the option to use flame source, oil, or burlap.

The design, routing, and separation of cable and raceways are further described in Section 8.3.

Control of Combustible Materials

The plant is constructed of noncombustible materials to the extent practicable. The selection of construction materials and the control of combustible materials are in accordance with BTP CMEB 9.5-1 and Section 3.3 of NFPA 804 (Reference 2) as specified in WCAP-15871 (Reference 20).

The storage and use of hydrogen are according to NFPA 50A and NFPA 50B (Reference 2). Hydrogen lines in safety-related areas are designed to seismic Category I requirements.

Ventilation systems are designed to maintain the hydrogen concentration in the battery rooms well below 2 percent by volume, as described in subsections 9.4.1 and 9.4.2.

The turbine lubrication oil system, located in the turbine building, is separated from areas containing safety-related equipment by 3-hour rated fire barriers.

Outdoor oil-filled transformers are separated from plant buildings according to NFPA 804 (Reference 2).

The diesel fuel oil storage tanks and the diesel fuel oil transfer pump enclosure are located in the yard area more than 50 feet from any safety-related structure. Potential oil spills from the storage tanks are confined by a diked enclosure. A diesel generator fuel day tank is located within each diesel generator room and is enclosed in a 3-hour fire rated barrier.

The diesel fuel supply for the ancillary diesel generators is in the same room as the diesel generators. The ancillary diesel generator room is separated from the rest of the annex building by a 3-hour rated fire barrier.

The diesel fuel supply for the diesel-driven fire pump is in the diesel-driven fire pump enclosure. The diesel pump enclosure is located in the yard more than 50 feet from safety-related structures. The enclosure includes a fire detector which produces an audible alarm locally with both visual and audible alarms in the main control room and security central alarm station. The fire is extinguished by operation of an automatic sprinkler system or manually, using hose streams or portable extinguishers.

Quantities and locations of other combustible materials are identified in the fire protection analysis (see Appendix 9A).

Control of Radioactive Materials

As described in the fire protection analysis, materials that collect or contain radioactivity, such as spent ion exchange resins and filters, are protected and stored in accordance with BTP CMEB 9.5-1.

9.5.1.2.1.2 Fire Detection and Alarm Systems

Fire detection and alarm systems are provided where required by the fire protection analysis, in accordance with BTP CMEB 9.5-1 and NFPA 72 (Reference 2). Fire detection and alarm systems are generally in accordance with NFPA 804 (Reference 2). See WCAP-15871 (Reference 20) for details.

Fire detectors respond to smoke, flame, heat, or the products of combustion. The installation of fire detectors is in accordance with NFPA 72 (Reference 2) and the manufacturer's recommendations. The selection and installation of fire detectors is also based on consideration of the type of hazard, combustible loading, the type of combustion products, and detector response characteristics. The types of detectors used in each fire area are identified in the fire protection analysis.

The fire detection system provides audible and visual alarms and system trouble annunciation in the main control room and the security central alarm station. Annunciation circuits connecting zone, main, and remote annunciation panels are electrically supervised.

Each fire detection, indicating, and alarm unit is provided with reliable ac electrical power from the non-Class 1E uninterruptible power supply system. This system is described in subsection 8.3.2.1.2.

9.5.1.2.1.3 Fire Water Supply System

The fire water supply system is designed in accordance with BTP CMEB 9.5-1 and the applicable NFPA standards.

Fire water is supplied from two separate fresh water storage tanks. The primary fire water tank is dedicated to the fire protection system. The secondary fire water tank contains water for use by the fire protection system and the containment spray system. The water above the tank standpipe can be used as a gravity-fed alternate makeup source for the SWS cooling tower basin.

There are two 100-percent capacity fire pumps. The lead pump is electric motor-driven and the secondary pump is diesel engine-driven. A motor-driven jockey pump is used to keep the fire water system full of water and pressurized, as required. For additional information regarding the fire water tanks and pumps, see subsection 9.5.1.2.3.

The fire water tanks are permanently connected to the fire pumps suction piping and are arranged so that the pumps can take suction from either or both tanks. Piping between the fire water sources and the fire pumps is in accordance with NFPA 20 (Reference 2). A failure in one tank or its piping cannot cause both tanks to drain.

Fire protection water is distributed by an underground yard main loop, designed in accordance with NFPA 24 (Reference 2). The yard main includes a building interior header that distributes water to suppression systems within the main plant buildings. Indicator valves provide sectionalized control and permit isolation of portions of the yard main for maintenance or repair. An indicator valve also separates the individual fire pump connections to the main.

Sprinkler and standpipe systems are supplied by connections from the yard main. Where plant areas, other than the containment and outlying buildings, are protected by both sprinkler systems and standpipe systems, the connections from the yard main are arranged so that a single active failure or a crack in a moderate energy line cannot impair both systems.

Manual valves for sectionalized control of the yard main or for shutoff of the water supply to suppression systems are electrically supervised if located above ground and administratively controlled if located underground.

Hydrants are provided on the yard main in accordance with NFPA 24 (Reference 2), at intervals of up to about 250 feet. They provide hose stream protection for every part of each building and two hose streams for every part of the interior of each building not covered by standpipe protection, excluding certain remote areas of the shield building. The lateral to each hydrant is controlled by an isolation valve.

Hose houses are in accordance with NFPA 24 (Reference 2). They are located at intervals of not more than 1000 feet along the yard main.

Outdoor fire water piping and water suppression systems located in unheated areas of the plant are protected from freezing.

A permanent connection between the fire protection system and the component cooling water system in the annex building is normally isolated by two valves in series.

A permanent connection between the fire protection system and the containment spray system in the containment is normally isolated by two valves in series.

9.5.1.2.1.4 Automatic Fire Suppression Systems

Automatic fire suppression systems are in accordance with BTP CMEB 9.5-1 and the applicable NFPA standards, with consideration of the unique aspects of each application, including building

characteristics, materials of construction, environmental conditions, fire area contents, and adjacent structures.

Fixed automatic fire suppression systems are provided based on the results of the fire protection analysis.

The selection of automatic suppression systems for each plant area is based on the guidance of NFPA 804 (Reference 2) as stated in WCAP-15871 (Reference 20). Water systems are preferred, but the use of automatic water suppression systems for firefighting in radiation areas is minimized because of the possible spread of contamination. Halon and carbon dioxide fixed flooding systems are not used.

The fire protection analysis describes the fire suppression systems provided for each fire area.

Automatic Water Suppression Systems

Automatic sprinkler and water spray systems are provided in accordance with the applicable requirements of NFPA 13 and NFPA 15 (Reference 2). Each system consists of overhead piping and components from a water supply valve to the point where water discharges from the system. Some systems have a control valve that is actuated automatically by the fire detection system. Each system has a status monitoring device for actuating an alarm when the system is in operation.

Preaction sprinkler systems are used where the leakage or inadvertent actuation of water-filled sprinkler systems could produce undesirable consequences, such as water discharge on equipment important to continued plant operation.

Each type of automatic sprinkler and automatic water spray system used on AP1000 is briefly described below:

- **Wet Pipe -** A sprinkler system employing closed (fusible link operated) sprinklers attached to a water-filled piping network. Water discharges immediately from those sprinklers where the heat from a fire is sufficient to melt the fusible link. System operation is terminated manually by shutting the water-supply valve.

- **Dry Pipe -** A sprinkler system employing closed sprinklers attached to a piping network containing pressurized air. Heat from a fire opens one or more sprinklers, releasing the air and permitting water supply pressure to open the dry pipe valve. Water flows into the piping network and discharges from the open sprinklers. System operation is terminated manually by shutting the water-supply valve.

- **Preaction -** A sprinkler system employing closed sprinklers attached to a dry piping network, with fire detector(s) installed in the same areas as the sprinklers. Operation of the fire detection system opens a preaction valve, which permits water to flow into the sprinkler piping network and to be discharged from any sprinklers that may have been opened by the fire. System operation is terminated manually by shutting the water-supply valve.

- **Deluge Sprinkler or Water Spray System -** A system employing open sprinklers or spray nozzles attached to a dry piping network, with fire detector(s) installed in the same areas as

the sprinklers. Operation of the fire detection system opens a deluge valve, which permits water to flow into the sprinkler piping network and to be discharged from all the sprinklers or spray nozzles. System operation is terminated manually by shutting the water-supply valve.

9.5.1.2.1.5 Manual Fire Suppression Systems

Manual fire suppression capability is provided in areas that do not require an automatic suppression system. Plant areas that have an automatic suppression system also have manual backup fire suppression capability.

Manual fire suppression capabilities include the yard main fire hydrants and hose stations described in subsection 9.5.1.2.1.3.

Standpipe and Hose Systems

Standpipe systems are provided for each building in accordance with NFPA 14 (Reference 2) requirements for Class III service. Wet standpipe systems are used except inside containment. Individual standpipes are at least 4 inches in diameter for multiple hose connections and 2.5 inches in diameter for single hose connections.

Hose stations are located to facilitate access for firefighting, as described in the fire protection analysis. Areas that contain, or could present a fire exposure event to, safety-related equipment are within reach of at least one effective hose stream. Alternative hose stations are provided for an area where the fire could block access to a single hose station serving that area. To the maximum extent practical, hose stations are located outside of high-radiation areas.

Each hose station has not more than 100 feet of 1.5-inch woven-jacket lined fire hose. Nozzles are provided at each station.

Seismic Standpipe System

The standpipe system serving areas containing equipment required for safe shutdown following a safe shutdown earthquake is designed and supported so that it can withstand the effects of a safe shutdown earthquake and remain functional. The seismically analyzed standpipe system is illustrated on Figure 9.5.1-1. This system also supplies water to automatic suppression systems inside containment and in the nonradiologically controlled portion of the auxiliary building (see Appendix 9A).

The seismic standpipe system is operated in the same manner during normal plant operation or following a safe shutdown earthquake. It is supplied with water from the safety related passive containment cooling system storage tank and normally operates independently of the rest of the fire protection system. The supply line draws water from a portion of the storage tank, using water allocated for fire protection. This volume of water is sufficient to supply two hose streams, each with a flow of 75 gallons per minute, for 2 hours.

The portion of the system outside containment is a wet standpipe system that is pressurized by the static head of water in the passive containment cooling system tank. The portion of the system inside containment is a dry standpipe system. The supply valve is normally closed for containment

isolation. During shutdown periods when the containment is occupied, when operation of containment automatic suppression systems is required, or when containment access is required to fight a fire, the valve is opened to pressurize the system.

In the unlikely event that the water supply from the passive containment cooling system is unavailable or additional water is needed, the seismic standpipe system can be supplied from the fire main by opening the normally closed cross-connect valve with the plant fire main.

A passive containment cooling ancillary water storage tank is provided to supply the seismic standpipe system following a safe shutdown earthquake and after actuation of the passive containment cooling system. The tank is designed and supported so that it can withstand the effects of a safe shutdown earthquake and remain functional. A dedicated portion of the storage capacity of the tank is sufficient to supply two hose streams, each with a flow of 75 gallons per minute, for 2 hours. Normally much more water is available. (Refer to subsection 6.2.2 for additional information.)

A failure of the seismic standpipe system does not prevent successful operation of the passive containment cooling system. A leak in the standpipe system could result in the loss of only a limited amount of water from the passive containment cooling system storage tank, even if no action were taken to isolate the leak. The volume of water allocated for fire protection is not required for passive containment cooling.

Portable Fire Extinguishers

Portable fire extinguishers are provided throughout the plant. Portable extinguishers are readily accessible for use in high radiation areas but are not located within those areas unless the fire protection analysis indicates that a specific requirement exists.

9.5.1.2.2 System Operation

The fire protection system normally operates in an active standby mode. The fire water supply piping is kept full and pressurized by operation of the jockey pump. Shutoff valves controlling fire suppression systems are normally aligned in the open position. Fire detection and alarm circuits are normally energized and monitored for trouble or loss of power as described in subsection 9.5.1.2.1.2.

When a fire is detected, the fire detection system produces an audible alarm locally, and both visual and audible alarms in the main control room and security central alarm station.

Where the fire area is protected by an automatic suppression system, operation of the suppression system begins as described in subsection 9.5.1.2.1.4. Where the fire area is protected by manual suppression methods, the fire brigade reacts to control and extinguish the fire.

Ventilation system fire dampers close automatically against full airflow on high temperature to control the spread of fire and combustion products. Fire dampers serving certain safety-related, smoke-sensitive areas are also closed in response to an initiation signal from the fire detection system. Smoke is removed from the fire area as described in the fire protection analysis.

When water pressure in the yard main begins to fall, due to a demand for water from automatic or manual suppression systems, the motor-driven pump starts automatically on a low-pressure signal. If the motor-driven pump fails to start, the diesel-driven pump starts upon a lower pressure signal. The pump continues to run until it is stopped manually.

Firefighting activities continue until the fire is extinguished. Suppression systems are stopped manually. Operator actions are taken to repair and restore affected detection, alarm, and suppression systems to standby status.

9.5.1.2.3 Component Description

Selected fire protection system components are described below. Table 9.5.1-2 contains additional component data for fire protection equipment.

Fire Water Storage Tanks

Two separate fresh water storage tanks are provided for fire protection in accordance with NFPA 22 (Reference 2). The storage capacity of each tank is sufficient to maintain the design fire pump flow rate for at least 2 hours. Either tank can be automatically refilled from the raw water system within 8 hours. Freeze protection is provided as needed using electric immersion heaters.

Passive Containment Cooling Ancillary Water Storage Tank

See subsection 6.2.2.2.3 for a description of this component.

Fire Pumps

Two 100-percent capacity fire pumps are provided in accordance with NFPA 20 (Reference 2). Each pump is rated for 2000 gpm. The lead pump is electric motor-driven and the second pump is diesel engine-driven. The pumps and their controllers are UL-listed. Fire pump status alarms are provided in the main control room.

The motor-driven fire pump is supplied with power from the turbine building 480 Vac non-Class 1E switchgear. The fuel tank for the diesel-driven pump holds enough fuel to operate the pump for at least 8 hours.

Valves

Valves used in the fire protection system are of an approved type for fire protection service. See the Fire Protection Handbook (Reference 4) for typical descriptions of these valves.

Fire Detectors

The types of fire detectors used in specific applications are identified in the fire protection analysis. See Reference 4 for descriptions of these fire detectors and their principles of operation.

9.5.1.3 Safety Evaluation (Fire Protection Analysis)

The fire protection analysis evaluates the potential for occurrence of fires within the plant and describes how fires are detected and suppressed. It also confirms that the plant can be safely shut down following a postulated fire. The fire protection analysis is in Appendix 9A.

The fire protection analysis includes a set of fire area drawings and a discussion of the analysis methodology. It also provides the following information for each fire area in the plant:

- A description of the fire area and its fire barriers, its associated fire zones, as well as fire detection and suppression capabilities
- Identification of the type, quantity, and location of in-situ and anticipated transient combustible materials, and combustible loading
- A listing of safety-related mechanical and electrical equipment
- Fire severity category and equivalent duration
- An evaluation of fire protection system adequacy and the consequences of a fire, including a discussion of the control and removal of smoke and hot gases, and drainage system adequacy.

For fire areas containing safety-related structures, systems, and components the following information is also provided:

- An evaluation of fire protection system integrity. This includes a determination of whether the credible failure of a fire protection system component could cause inadvertent operation of an automatic fire suppression system in the fire area, and the resulting consequences. Also included is verification that no potential single impairment of the fire protection system could incapacitate both the automatic suppression system and the backup manual suppression system (generally a hose station), for fire areas where both types of suppression systems are provided.
- A safe shutdown evaluation confirming the capability to safely shut down the reactor and maintain it in a safe shutdown condition following a fire

The safe shutdown evaluation is based upon all components in a single fire area outside containment or any fire zone inside containment being disabled by the fire. Success is based upon the plant being able to achieve safe shutdown as discussed in Section 7.4. Safe shutdown is a safe, stable condition that can be maintained indefinitely with the reactor subcritical and reactor coolant pressure at a small fraction of its design pressure. As described in Section 7.4.1.1, safety-related systems achieve this condition automatically using reliable, passive processes. The passive residual heat removal heat exchanger transfers heat to the in-containment refueling water storage tank. Steam from this tank enters the containment which is cooled by the passive containment cooling system. These systems reduce the reactor temperature and pressure to less than 420°F and 600 psia in 36 hours. See Appendix 19E for additional details about the shutdown evaluation. This is a safe and acceptable end state which is used to show compliance with BTP 9.5-1. The

safe shutdown fire evaluation in Appendix 9A shows that there is sufficient safety-related equipment available after a fire which destroys a single fire area outside containment or any fire zone inside containment, to bring the plant to this safe shutdown condition.

It should be noted that following most fires, that nonsafety-related systems are expected to be available to bring the plant to a cold shutdown for repairs. These systems are defense in depth systems with redundant active components. These systems are expected to be available because of the use of redundant equipment and fire protection features, including separation or automatic fire suppression.

Table 9.5.1-4 lists the system capabilities that are expected to be available following a fire to bring the plant to a cold shutdown. This list does not contain the nonsafety-related support systems that are not necessary to operate following a fire. For example, chilled water cooling and non-1E instrumentation are not required following a fire. Heating and ventilation are not required except for the annex/auxiliary non-radioactive ventilation system AHUs used to ventilate the non-1E switchgear rooms. The following safety-related capabilities are used together with these nonsafety-related capabilities to achieve cold shutdown:

- Insertion of control rods to provide reactor shutdown,
- Instrumentation to monitor reactor coolant system conditions,
- Operation of one core makeup tank in a natural circulation mode to provide reactor coolant makeup and boration in case the chemical and volume control system makeup is unavailable due to a fire,
- Manual partial opening (and closing) of one first stage automatic depressurization valve to provide a controlled, limited depressurization of the reactor coolant system to allow initiation of the normal residual heat removal system in case the chemical and volume control system auxiliary spray is unavailable due to a fire.

The use of these safety-related capabilities does not result in significant plant transients. The reactor coolant system pressure boundary is maintained and containment pressure and temperature conditions are not affected by the use of these safety-related capabilities.

If a less likely, more severe fire occurs, these systems are expected to be recovered after reasonable actions are taken to utilize temporary connections or to perform repairs (see subsections 9.2.2.4.5.5 and 9.5.1.1.1). Recovery of these systems allows the plant to be brought to a cold shutdown for plant repairs. No credit is taken in the Appendix 9A fire evaluation for nonsafety-related systems. As a result, fire separation is not required for these systems.

9.5.1.4 Testing and Inspection

The fire pumps are initially tested by the manufacturer in accordance with NFPA 20 (Reference 2) to verify pressure integrity and performance.

Preoperational testing is in accordance with the Initial Test Program (Chapter 14).

9.5.1.5 Instrumentation Applications

Pressure sensors start the fire pumps on decreasing fire main water pressure. Pressure indicators confirm adequate pressures for automatic and manual suppression systems. Valve position sensors are used to monitor the positions of water supply valves.

Temperature instrumentation is used to monitor fire water storage tank temperature. Level instrumentation is used to monitor levels in the fire water storage tanks and the diesel-driven fire pump fuel storage tank.

9.5.1.6 Personnel Qualification and Training

Preparation and review of the fire protection analysis, and design and selection of fire protection equipment, is performed by fire protection and nuclear safety systems engineers.

The qualification requirements for individuals responsible for development of the fire protection program, training of firefighting personnel, as well as associated administrative procedures are discussed in subsection 9.5.1.8.1.

9.5.1.7 Quality Assurance

Quality assurance controls are applied to the activities involved in the design, procurement, installation, testing, and maintenance of fire protection systems for safety-related areas, in accordance with the programs outlined in Chapter 17.

9.5.1.8 Combined License Information

9.5.1.8.1 The Combined License applicant will address qualification requirements for individuals responsible for development of the fire protection program, training of firefighting personnel, administrative procedures and controls governing the fire protection program during plant operation, and fire protection system maintenance.

9.5.1.8.2 The Combined License applicant will provide site-specific fire protection analysis information for the yard area, the administration building, and for other outlying buildings consistent with Appendix 9A.

9.5.1.8.3 The Combined License applicant will address BTP CMEB 9.5-1 issues identified in Table 9.5.1-1 by the acronym "WA."

9.5.1.8.4 The Combined License applicant will address updating the list of NFPA exceptions in the plant-specific DCD, if necessary.

9.5.1.8.5 The Combined License information requested in this subsection has been completely addressed in APP-GW-GLR-027 (Reference 22), and the applicable changes are incorporated into the DCD. No additional work is required by the Combined License applicant.

The following words represent the original Combined License Information Item commitment, which has been addressed as discussed above:

> The Combined License applicant will provide an analysis that demonstrates that operator actions which minimize the probability of the potential for spurious ADS actuation as a result of a fire can be accomplished within 30 minutes following detection of the fire and the procedure for the manual actuation of the valve to allow fire water to reach the automatic fire system in the containment maintenance floor.

9.5.1.8.6 The Combined License holder will address the process for identifying deviations between the as-built installation of fire barriers and their tested configurations.

9.5.1.8.7 The Combined License applicant will establish procedures to minimize risk when fire areas are breached during maintenance. These procedures will address a fire watch for fire areas breached during maintenance.

9.5.1.8.8 The Combined License information requested in this subsection has been completely addressed in APP-GW-GLR-019 (Reference 23), and the applicable changes are incorporated into the DCD. No additional work is required by the Combined License applicant.

The following words represent the original Combined License Information Item commitment, which has been addressed as discussed above:

> The Combined License applicant will provide 2-hour fire resistance test data in accordance with ASTM E-119 and NFPA 251 for the composite material selected for stairwell fire barriers.

9.5.2 Communication System

The communication system (EFS) provides effective intraplant communications and effective plant-to-offsite communications during normal, maintenance, transient, fire, and accident conditions, including loss of offsite power. The communication system consists of the following subsystems:

- Wireless telephone system
- Telephone/page system
- Private automatic branch exchange (PABX) system
- Sound-powered system
- Emergency offsite communications
- Security communication system.

The communication system allows each guard, watchman, or armed response individual on duty to maintain continuous communication with an individual in each manned alarm station and with other agencies both onsite and offsite, as required by 10 CFR 73, Sections 55 (e) and (f) (Reference 13). This is accomplished by both the PABX system and the wireless communication system. Each system can provide these communication functions.

Communication equipment used with respiratory protection devices will be designed and selected in accordance with EPRI NP-6559 (Reference 8).

9.5.2.1 Design Basis

The communication system serves no safety-related function and therefore has no nuclear safety design basis.

The communication subsystems are independent of one another; therefore, a failure in one subsystem does not degrade performance of the other subsystems.

The communication system is in accordance with applicable codes and standards minimizing electromagnetic interference and its potential effects to equipment. "Low-powered" type equipment is used, where possible, which has been demonstrated to have a limited potential for causing interference with electronic equipment (Reference 8) (EPRI NP-6559, Section 5). Communication equipment is shielded, as necessary, from the detrimental effects of electromagnetic interference.

9.5.2.2 System Description

9.5.2.2.1 Wireless Telephone System

The wireless telephone system consists of wireless belt-clip portable handsets, hands-free type portable headsets, a comprehensive antenna system, and a wireless telephone switch. The wireless telephone system is the primary means of communication for plant operations and maintenance personnel. The telephone-page, PABX telephone, and sound-powered communication systems are for general plant communications and serve as a backup to the wireless system.

The wireless telephone system has the ability to dial fixed PABX telephone stations and vice versa. The wireless system has the capability to access the page circuit of the telephone-page system and the capability to access offsite emergency communication links.

Normal 120-V ac power supplies the wireless telephone switch. Upon loss of the normal power, the switch is powered from the non-Class 1E dc and uninterruptible power supply system and supplies power for system operation for 120 minutes.

9.5.2.2.2 Telephone/Page System

The telephone/page system consists of handsets, amplifiers, loudspeakers, siren tone generators, a centralized test and distribution cabinet, and associated equipment. The system consists of one paging line and five party lines. The lines are independent of one another without crosstalk or interference. One party line is designed for communication between zones. Communication is established by selecting the same clear party line at each desired station using the party line selector switch provided with each unit and then talking into the handset. Intrazone announcements are made by pushing the paging button and speaking into the handset microphone at the handset station. Interzone announcements are made by first merging the required zones and then pushing the paging button and speaking into the handset microphone at the handset station.

Remote zone merging control units are provided at the main control room, the security central alarm station, and the security secondary alarm station.

A five-tone siren generator annunciates alarms using the telephone page system amplifiers and speakers. Alarm initiation and tone selection capability are provided in the main control room.

Since volume control adjustment knobs are provided with each amplifier, a volume control bypass relay is provided. These relays bypass the volume controls upon initiation of an alarm by the siren tone generator, thereby providing full volume for alarms. Zones are automatically merged during an alarm condition.

Within the plant and outside area zones, subcircuits are provided which break the zone into several sections. Each subcircuit can be disconnected from the rest of the system at a central location should a disabling failure occur.

Power to the telephone/page system is provided from the non-Class 1E dc and uninterruptible power supply system sized to supply power for 120 minutes after a loss of ac power.

9.5.2.2.3 Private Automatic Branch Exchange System

The private automatic branch exchange (PABX) system provides communication between the system stations, with capability for transferring calls and providing conference calls at up to five stations.

A portion of the PABX, specifically in the main control room and technical support center area, has additional capability. The telephones in these areas are programmable. Buttons on the phone can be dedicated and color coded to specific telephone numbers.

The PABX system also interfaces with the following communication systems:

- The wireless telephone system
- Hotlines to specified locations; for example, dedicated communication lines with load dispatcher to support and coordinate the system grid is as described in subsection 9.5.2.5
- Local area telephone system lines
- Access to the page circuit in the telephone page system
- Direct extensions from the PABX locations exterior to the plant as dictated in subsection 9.5.2.5

The hotline circuits are dedicated channels that provide direct communication between the main control room and the headquarters or other facilities as required in subsection 9.5.2.5.

Commercial telephone lines are provided by the local area telephone company. Telephone lines may not terminate at the PABX. There are private lines that bypass the switch and ring directly at a telephone set. These numbers are located in the main control room, the alarm stations and at

specific management offices located throughout the site. The local telephone company lines that terminate at the switch are programmed to reserve part of the lines for outgoing calls only. Others are programmed for incoming only so that some lines are available for calling onto and off of the site. The number of lines will be defined as required in subsection 9.5.2.5.

Power to the PABX is provided from the non-Class 1E dc and uninterruptible power supply system sized to supply power for 120 minutes after a loss of ac power.

9.5.2.2.4 Sound-Powered System

Two unitized systems are provided as follows:

- A loop sound-powered system for refueling
- A multiloop system throughout the plant for startup and maintenance testing

The sound-powered system does not require external power supply for operation.

9.5.2.3 System Operation Communication Stations

Table 9.5.2-1 lists the communication stations provided for operator use during transients.

The main control room and remote shutdown room are designed and instrumented to bring the plant to a safe shutdown condition without relying on communications equipment. Various communication stations are provided throughout the plant.

9.5.2.4 Inspection and Testing Requirements

Communication systems of the types described above are conventional and have a history of reliable operation. Most of these systems are in routine use, and this routine use will demonstrate their availability. Those systems not frequently used, but required during emergency situations, are tested at periodic intervals to demonstrate operability when required.

9.5.2.5 Combined License Information

9.5.2.5.1 Offsite Interfaces

Combined License applicants referencing the AP1000 certified design will address interfaces to required offsite locations; this will include addressing the recommendations of BL-80-15 (Reference 21) regarding loss of the emergency notification system due to a loss of offsite power.

9.5.2.5.2 Emergency Offsite Communications

The emergency offsite communication system, including the crisis management radio system, will be addressed by the Combined License applicant.

9.5.2.5.3 Security Communications

Specific details for the security communication system are as discussed in separate security documents referred to in Section 13.6.

9.5.3 Plant Lighting System

The plant lighting system includes normal, emergency, panel, and security lighting. The normal lighting provides normal illumination during plant operating, maintenance, and test conditions. The emergency lighting provides illumination in areas where emergency operations are performed upon loss of normal lighting. The panel lighting in the control room is designed to provide the minimum illumination required at the safety panels. The security lighting system is described in separate security documents referred to in Section 13.6.

9.5.3.1 Design Basis

9.5.3.1.1 Safety Design Basis

- The normal and emergency lighting in the main control room and in the remote shutdown room is non-Class 1E. The emergency lighting in these plant areas is fed from a Class 1E uninterruptible power supply through two series fuses that are coordinated for isolation. The emergency lighting provides illumination for 72 hours upon loss of normal lighting. In other plant areas, the emergency lighting provides illumination for 8 hours.

- Lighting for the safety panels in the control room is provided by the panel lighting system. The power for the panel lighting is from the Divisions B and C Class 1E inverters through Class 1E distribution panels. The panel lighting circuits up to the lighting fixture are classified as associated and are routed in Seismic Category I raceways. The bulbs are not seismically qualified.

- During the 72 hour period following a loss of all ac power sources, lighting in the main control room can be provided as described in subsection 9.5.3.2.2.

9.5.3.1.2 Power Generation Design Basis

- The plant lighting system is non-Class 1E.

- The plant lighting system provides illumination levels for normal and emergency lighting as recommended in Illuminating Engineering Society Lighting Handbook (Reference 5).

- Mercury vapor lamps and mercury switches are not used in fuel handling areas.

- High-intensity discharge (HID) and fluorescent lamps are not used in the containment and fuel handling areas due to their mercury content. Incandescent lighting or other lighting not containing restricted materials is used in these areas.

9.5.3.2 System Description

9.5.3.2.1 Normal Lighting

Power to the normal lighting system is supplied from the non-Class 1E ac power distribution system at the following voltage levels:

- 480/277 V, three-phase, four-wire, grounded neutral system lighting panels are fed from the 480 V motor control centers; this source is for the lighting fixtures rated at 480/277 V and for the welding receptacles.

- 208/120 V, three-phase, four-wire, grounded neutral system distribution panels are fed from the 480 V motor control centers through dry-type 480-208/120 V transformers; this source is for lighting and utility receptacles.

- 208/120 V, three-phase, four-wire, grounded neutral regulated power fed from the 480 V motor control centers through the Class 1E 480 - 208/120 V voltage regulating transformers (divisions B and C); this source is for the normal and emergency lighting in the main control room and remote shutdown room and is isolated through two series fuses for isolation. The normal lighting in these plant areas is non-Class 1E.

The normal lighting system has the following features:

- The normal lighting system is powered from the diesel-backed buses and the lighting load is distributed between the two onsite standby diesel generator buses.

- The motor control centers powering the normal lighting system are energized from the 480 V load centers connected in a tie-breaker configuration.

- Lighting distribution panel branch circuit breakers are controlled by a lighting control system. Approximately 75 percent of the normal lighting is tripped off automatically upon loss of normal ac power (except in the main control room and in the remote shutdown room) to limit the load on the onsite standby diesel generators. The lighting control system allows the operator to energize or de-energize lighting in selected areas based on the actual need and available power from the onsite standby diesel generators.

- The lighting circuits are staggered as much as practical. The staggered circuits receive power from separate buses to prevent complete loss of light in the event of a bus or a circuit failure.

- The lighting fixtures located in the vicinity of safety-related equipment are supported so that they do not adversely impact this equipment when subjected to the seismic loading of a safe shutdown earthquake.

- The control room and remote shutdown room lighting uses semi-indirect, low-glare lighting fixtures and programmable dimming features. The normal control room lighting provides at least 50 foot candles of illumination at the safety panel and at the workstations when the dimming features are adjusted for maximum illumination. The normal remote shutdown

room lighting provides at least 50 foot candles of illumination at the remote shutdown workstation when the dimming features are adjusted for maximum illumination.

9.5.3.2.2 Emergency Lighting

Emergency lighting is designed to provide the required illumination levels in the areas as described below:

- The main control room and remote shutdown room each has emergency lighting consisting of 120 V ac fluorescent lighting fixtures which are continuously energized. The fixtures are powered from the Class 1E 250 V dc switchboards through the Class 1E 208Y/120 V ac inverters and are isolated through two series fuses. Three hour fire barrier separation is provided between redundant emergency lighting power supplies and cables outside the main control room and the remote shutdown area. The control room lighting complies with the human factor requirements by utilizing semi-indirect, low-glare lighting fixtures and programmable dimming features. The control room emergency lighting is integrated with normal lighting that consists of identical lighting fixtures and dimming features. The emergency lighting system is designed so that, to the extent practical, alternate emergency lighting fixtures are fed from separate divisions of the Class 1E dc and uninterruptible power supply system. Both normal and emergency lighting fixtures, controllers, dimmers, and associated cables used in the main control room and remote shutdown room are non-Class 1E. The ceiling grid network, raceways and fixtures utilize seismic supports. A single fault cannot interrupt all of the lighting in the main control room and at the remote shutdown workstation simultaneously. The emergency lighting provides at least 10 foot candles of illumination at the safety panel, at the workstations in the control room, and at the remote shutdown workstation when the dimming features are adjusted for maximum illumination.

- Following the 72 hour period after a loss of all ac power sources, the lighting in the main control room is powered from two ancillary ac generators as described in subsection 8.3.1.1.1.

- Emergency lighting in areas outside the main control room and remote shutdown room is accomplished by 8-hour, self-contained, battery pack lighting units. These units are non-Class 1E and provide illumination for safe ingress and egress of personnel following a loss of normal lighting and for those areas which could be involved in power recovery (for example, onsite standby diesel-generators and their controls). In addition, these units are provided in areas where manual actions are required for operation of equipment needed during a fire. These units are normally powered from the non-Class 1E 480/277 V ac motor control centers and they automatically switch to their internal dc source once normal ac power is lost.

9.5.3.2.3 Panel Lighting

Panel lighting is designed to provide lighting in the control room at the safety panels as described below:

- Panel lighting consists of lighting fixtures located on or near safety panels in the control room. The panel lights are continuously energized. The fixtures are powered from the Divisions B and C Class 1E inverters through Class 1E distribution panels.

- The circuits are treated as Class 1E. The panel lighting circuits up to the lighting fixture are classified as associated and are routed in Seismic Category I raceways.

- The bulbs are not seismically qualified.

9.5.3.3 Safety Evaluation

The areas that require lighting for safe shutdown are the main control room and the remote shutdown room when the main control room is not accessible.

- Lighting fixtures in the main control room and remote shutdown room are seismic Category II.

- Emergency and panel lighting circuits up to the lighting fixture are routed in seismic Category I raceways.

- Panel Lighting circuits up to the lighting fixture are treated as Class 1E and Classified as associated. This is acceptable to the Class 1E power supply because of the over current protective device coordination.

- Bulbs are not seismically qualified. However, the bulbs can only fail open and therefore do not represent a hazard to the Class 1E power sources.

- Power to normal and emergency lighting in the main control room and in the remote shutdown room is supplied from the redundant divisions of Class 1E dc and UPS system through two series fuses for isolation. The fuses protect the batteries from failures of the non-1E lighting circuits. The Class 1E batteries provided in the Class 1E dc and UPS system are capable of powering the emergency lighting in these rooms for 72 hours when the normal ac sources are not available. Operation beyond 72 hours is described in subsection 8.3.1.1.1.

9.5.3.4 Test and Inspections

The ac lighting circuits are normally energized and require no periodic testing. The 8-hour battery pack lighting is inspected and tested periodically.

9.5.3.5 Combined License Information for Plant Lighting

This section has no requirements to be provided in support of Combined License application.

9.5.4 Standby Diesel Fuel Oil System

This subsection describes the features of the standby diesel fuel oil system. The standby diesel generators are supplied by a combined storage system of fuel oil storage tanks. Two above-ground fuel oil storage tanks for the combined system service are provided. These tanks store diesel grade fuel. The standby diesel generators are described in subsection 8.3.1.1.2.

9.5.4.1 Design Basis

9.5.4.1.1 Safety Design Basis

The standby diesel fuel oil system serves no safety-related function and therefore has no nuclear safety design basis.

9.5.4.1.2 Power Generation Design Basis

The standby diesel fuel oil system serves no power generation function. Its function is to store and transfer fuel oil for the onsite standby diesel generators. The system is designed to meet the following requirements:

- Provide a supply of fuel sufficient to operate each diesel generator at continuous rating for 7 days
- Provide a 4-day fuel supply for the two ancillary diesel generators

9.5.4.1.3 Codes and Standards

The codes and standards that are applicable to the components of the Standby Diesel Fuel Oil System that support the standby diesel generators are listed in Section 3.2. The portions of the Standby Diesel Fuel Oil System that support the standby diesel generators follow the guidance for distillate fuel oil supply contained in Chapter 13 of the DEMA Standard Practices (Reference 19).

9.5.4.2 System Description Storage and Transfer

9.5.4.2.1 General Description

The standby diesel fuel oil system is shown in Figure 9.5.4-1. The system consists of two fuel oil storage tanks, a diesel generator fuel oil transfer system, and an ancillary diesel generator fuel oil supply system.

Two fuel oil storage tanks are provided, one for each of the standby diesel generators.

The plant finished grade elevation will be higher than the probable maximum flood level (refer to subsection 3.4.1.1, Protection From External Flooding). Therefore the system will be safe from flooding.

The diesel generator fuel oil transfer system consists of two independent fuel storage, transfer and recirculation flow paths; that is, one path per diesel generator. Each path consists of a fuel oil

storage tank, one fuel transfer pump, diesel fuel oil supply and fuel return piping, a day tank, and the associated specialties valves, fittings, and instrumentation. The supply lines from the transfer pumps to the daytanks include fuel oil heaters, filters and moisture separators. The system is protected from the effects of low temperatures by the inline electric oil heater in the transfer line.

The ancillary diesel generator fuel oil supply portion of the system consists of a single 100 percent capacity tank serving both ancillary diesel generators. The tank is located inside the annex building and is served by the annex building heating and ventilation system. The tank is insulated and provided with heaters to maintain the fuel oil above the oil cloud point. Fuel oil lines from the tank to the diesels are insulated.

Two separate prefabricated insulated, heated and ventilated weather enclosures are provided for the transfer systems. Each enclosure houses one diesel fuel oil transfer pump assembly. The enclosures are sufficiently separated to prevent a fire in either enclosure from causing an interruption in the other flow path.

Characteristics of the system components are provided in Table 9.5.4-1.

9.5.4.2.2 Component Description

9.5.4.2.2.1 Fuel Storage Tanks

The two fuel oil storage tanks are located on grade. The tanks are designed and fabricated to API-650 Standards. Fittings are provided for each tank for level instrumentation, ventilation, sampling, water removal and sounding. Flanged openings are provided as manholes for access to the tank interior and each tank is equipped with an internal sump and a drain connection. Each tank is erected on a continuous concrete slab totally contained within a concrete dike to contain spills and prevent damage to the environment and seepage into the ground water.

The design of the standby diesel fuel oil system allows replenishment of fuel without interrupting operation of the diesel generator. The tank fill connection includes an internal pipe and diffuser to limit inlet filling velocities to prevent turbulence of sediment on the bottom of the tank. In addition, the diesel fuel oil transfer connections at the fuel oil storage tanks are 6 inches above the tank bottom to reduce the potential of sediment entry into the pipe line. A moisture separator and duplex filters are provided in the diesel fuel oil piping and a duplex fuel oil filter is provided on each engine to prevent detrimental effects on diesel performance from sediment.

9.5.4.2.2.2 Diesel Generator Fuel Oil Transfer

The diesel generator fuel oil transfer system consists of two modularized skid mounted assemblies, each consisting of suction strainers, a transfer pump, a fuel oil heater, a moisture separator, and a fuel filter with the interconnecting piping, valves and instrumentation.

The fuel oil transfer pumps are of the motor driven gear positive displacement type. Each pump capacity is approximately four times the full-load consumption rate of the associated diesel generator. The pump and pump motor are mounted on a common baseplate. A prefabricated weather enclosure protects the strainer, transfer pumps, heater, moisture separator, and duplex

filters and associated piping. There is no fixed fire protection water system inside the enclosure; therefore, spurious actuation of a fire protection system cannot occur.

9.5.4.2.2.3 Standby Diesel Generator Fuel Oil Day Tanks

The diesel generator fuel oil day tanks each provide four hours of operation for its associated diesel engine at continuous rating without resupply from a fuel oil storage tank. The day tanks are located within the diesel generator building and are separated from the remainder of the diesel generator building by 3-hour rated fire barriers. The day tanks are separate from sources of ignition or high-temperature surfaces. The day tank elevation is selected to provide the necessary suction head for the diesel engine fuel oil pump. The fuel oil piping is run in a piping trench from the tank to the engine. The fuel oil piping on the engine is located away from hot surfaces. Tank fittings provide for external tank fill, water removal, recirculation, and instrumentation. The fuel oil day tank is vented to atmosphere with a line which has a ball float check valve, and flame arrestor at the end. Since venting is to the outside atmosphere, there is not a buildup of combustible fumes within the diesel generator building.

9.5.4.2.2.4 Ancillary Diesel Generator Fuel Oil Storage Tank

The ancillary diesel generator fuel oil storage tank provides four days of operation of the ancillary diesel generators. The tank is analyzed to show that it will withstand an SSE and is located in the same room as the ancillary diesel generators in the annex building. This room is separated from the rest of the annex building by a 3-hour rated fire barrier. The tank elevation is selected to provide the necessary head for the diesels. The ancillary diesel generator fuel oil storage tank is vented to the atmosphere with a line which has a ball float check valve, and flame arrestor at the end. Since venting is to the outside atmosphere, there is not a buildup of combustible fumes within the annex.

9.5.4.2.2.5 Piping and Tank Surfaces

The exterior and interior surfaces of the fuel oil storage tanks are painted with a primer and finish coat system for corrosion protection of the tank surface. Exterior surfaces of the diesel fuel oil transfer piping are painted for corrosion protection. Buried sections are enclosed in guard pipes to prevent leakage to the environment.

The guard pipe containment system is corrosion resistant plastic, designed and fabricated for the site overburden wheel loads which result from equipment removal and replacement.

9.5.4.2.3 System Operation

The fuel oil storage tanks for the diesel generators are replenished from trucks (or other mobile suppliers) as required to maintain a seven day supply for each standby diesel generator. Each storage tank is equipped with a vent line to atmosphere at the top of the tank that ends with a flame arrester. A tank fill line runs to each tank and is extended to the truck unloading station. The fill line incorporates a normally closed valve and a filler cap at the end to preclude the entrance of water. The fill line is above grade. The fill line has a strainer located downstream of the isolation valve to prevent entrance of deleterious solid material into the tank. A water removal port is located at the tank sump.

Each diesel oil transfer pump takes suction from a fuel oil storage tank and discharges fuel oil to the diesel generator fuel oil day tank. Each pump is capable of supplying its diesel generator and, simultaneously, increasing the inventory in the fuel oil day tank. The fuel oil transfer pump is automatically started and stopped on day tank level control. Part of the pump discharge flow is returned to the storage tank via the recirculation line. The filter in the discharge line to the day tank is monitored by measuring differential pressures across the filter and by providing a high differential pressure alarm.

In the event the diesel fuel oil degrades during storage, biocides and other fuel additives are introduced to the tanked fuel oil to prevent deterioration of the oil, accumulation of sludge in the storage tanks, and the growth of algae and fungi.

Site-specific conditions determine the requirements for oil supply and emergency fuel delivery.

Provisions are included in the fuel oil storage tanks and day tanks to check and remove accumulated water.

The fuel oil storage tank for the ancillary diesel generators is replenished from trucks (or other mobile supplier) as required to maintain a 4-day supply for both ancillary diesel generators.

9.5.4.3 Safety Evaluation

The standby diesel fuel oil system serves a defense in depth function and requires no nuclear safety evaluation.

9.5.4.4 System Evaluation

The standby diesel generator fuel oil transfer system supplies fuel oil to the diesel generators which provide defense in depth electric power for investment protection.

The fuel oil storage tanks are sized to provide sufficient capacity for seven days of operation for each standby diesel generator. Within this period, the operator can arrange for additional fuel to be delivered to the plant site. An independent fuel supply path consisting of a fuel storage tank, a day tank, strainer, transfer pump, piping, oil heater, oil filter, moisture separator and valves is provided for each diesel generator. Each pump is powered from the electrical bus on which the diesel generator it serves is connected. Failure of a pump or a diesel generator would not affect the operability of components in the other train.

Maintenance of the fuel oil temperature above the cloud point is achieved automatically on low temperatures by an electric fuel oil heater at the discharge of the transfer fuel oil pump and by burial of the transfer piping below the frostline. The fuel oil system can be maintained above the cloud point temperature with the system electric heater in service and operation in the recirculation mode (by passing the day tank) back to the fuel oil storage tank. Above grade piping and inline equipment outdoors are insulated.

Electrical power supply for the diesel fuel oil transfer pumps and electric heater is from the associated diesel generator backed 480 V bus.

The fuel oil storage tank for the ancillary diesel generators is sized to provide sufficient capacity for four days of operation for both ancillary diesel generators. The ancillary diesel generators are not needed for the first 72 hours following a loss of all ac. Therefore, the operator has seven days to arrange for additional fuel to be delivered to the plant site. Maintenance of the fuel oil temperature above the cloud point when a normal ac source is available is achieved by the normal annex building heating and ventilation system maintaining room temperature within its normal range. Maintenance of the fuel oil temperature above the cloud point during operation of the ancillary diesel generators is achieved by electric tank heaters and tank insulation.

9.5.4.5 Tests and Inspections

9.5.4.5.1 Diesel Generator Fuel Oil Supply

The standby diesel generator fuel oil storage and transfer system operability may be demonstrated during tests of the diesel generator, or testing may be performed by operation of the system in recirculation mode (bypassing the day tank) and pumping fuel through the recirculation line back to the fuel oil storage tank. Fuel reserve for testing is supplied by sizing the storage tanks to contain fuel in excess of the volume required for seven days of operation at full load. Provisions are made to sample and analyze diesel fuel periodically to verify the fuel quality requirements.

9.5.4.6 Instrumentation Applications

9.5.4.6.1 Standby Diesel Generator Fuel Oil Supply

The transfer pumps can be operated from the control room. Alarms and indications of tank levels and transfer pump status are displayed in the control room. A secondary means of tank level determination is provided by dipsticks or sounding ports. Day tank fuel oil transfer pumps start and stop on low and high level, respectively, and the tank level transmitter activates a day tank high or low level alarm. The diesel oil transfer pumps start automatically when the level in the day tank decreases to set capacity. The day tank low level alarm annunciates when the level decreases to a point where 2 hours of fuel remain. The diesel oil transfer pumps are automatically stopped when the day tank level has increased to a higher set level.

Low fuel oil level in the standby diesel fuel oil storage tanks is also alarmed.

9.5.4.6.2 Ancillary Diesel Generator Fuel Oil Supply

There is no control room monitoring or control associated with the ancillary diesel generator fuel oil supply system. All controls and instruments are local/manual only. Provision is made to locally monitor fuel level in the tank.

9.5.4.7 Combined License Information

9.5.4.7.1 The Combined License information requested in this subsection has been completely addressed in APP-GW-GLR-120 (Reference 24), and the applicable changes are incorporated into the DCD. No additional work is required.

The following words represent the original Combined License Information Item commitment, which has been addressed as discussed above:

> Combined License applicants referencing the AP1000 certified design will address the site-specific need for cathodic protection in accordance with NACE Standard RP-01-69 for external metal surfaces of metal tanks in contact with the ground.

9.5.4.7.2 The Combined License information requested in this subsection has been partially addressed in APP-GW-GLR-120 (Reference 24), and the applicable changes are incorporated into the DCD. No additional work is required to address the information as delineated in the following paragraph:

> The epoxy-urethane paint color selected for the exterior of the standby diesel fuel oil storage tanks shall be white to minimize radiant sunlight heat transmission to the tank oil stored fuel volume.

The following activities are to be addressed by the Combined License applicant:

> Address the diesel fuel specifications grade and the fuel properties consistent with manufacturers' recommendations and the measures to protect against fuel degradation by a program of fuel sampling and testing.

The following words represent the original Combined License Information Item commitment, which has been addressed as discussed above:

> Combined License applicants referencing the AP1000 certified design will address site-specific factors in the fuel oil storage tank installation specification to reduce the effects of sun heat input into the stored fuel, the diesel fuel specifications grade and the fuel properties consistent with manufacturers' recommendations, and will address measures to protect against fuel degradation by a program of fuel sampling and testing.

9.5.5 References

1. NUREG-0800, U. S. Nuclear Regulatory Commission Standard Review Plan, Section 9.5.1, "Fire Protection Program," Revision 3, July 1981, including Branch Technical Position (BTP) CMEB 9.5-1, "Guidelines for Fire Protection for Nuclear Power Plants," Revision 2, July 1981.

2. National Fire Protection Association Codes and Standards:

   NFPA 10, 1998: Standard for Portable Fire Extinguishers; NFPA 13, 1999: Standard for the Installation of Sprinkler Systems; NFPA 14, 2000: Standard for the Installation of Standpipe, Private Hydrants, and Hose Systems; NFPA 15, 2001: Standard for Water Spray Fixed Systems for Fire Protection; NFPA 20, 1999: Standard for the Installation of Stationary Pumps for Fire Protection; NFPA 22, 1998: Standard for Water Tanks for Private Fire Protection; NFPA 24, 1995: Standard for Installation of Private Fire Service Mains and Their Appurtenances; NFPA 30, 2000: Flammable and Combustible Liquids Code; NFPA 50A, 1999: Standard for Gaseous Hydrogen Systems at Consumer Sites; NFPA 50B,

1999: Standard for Liquefied Hydrogen Systems at Consumer Sites; NFPA 72, 1999: National Fire Alarm Code; NFPA 780, 2000: Standard for the Installation of Lightning Protection Systems; NFPA 804, 2001: Standard for Fire Protection for Advanced Light Water Reactor Electric Generating Plants.

3. "IEEE Standard for Type Test of Class 1E Electric Cables, Field Splices, and Connections for Nuclear Power Generating Stations," IEEE Std 383-1974.

4. Fire Protection Handbook, Edited by A. E. Cote, National Fire Protection Association, 16th edition.

5. IES - 1987 Lighting Handbook.

6. IEEE Standard 281, "IEEE Standard Service Conditions for Power System Communication Equipment," 1984.

7. Beranek, Lee L., Noise Reduction, McGraw Hill Book Co., 1960.

8. EPRI Report NP 6559, "Voice Communication Systems Compatible with Respiratory Protection."

9. NRC IE Circulator No. 80-89, "Problems with Plant Internal Communications Systems," April 18, 1990.

10. 10 CFR 50, Appendix E, IV.E.9, "ERF Communications."

11. NRC IEN 87-58, "Continuous Communication Following Emergency Notifications."

12. NRC IEN 86-097, "Emergency Communication Systems."

13. 10 CFR 73, Sections 55 (e) and (f), "Physical Protection of Plants and Materials."

14. NUREG-0654, "Criteria for Preparation and Evaluation of Radiological Emergency Response Plan."

15. 10 CFR 50, Section 50.48 "Fire Protection."

16. 10 CFR 50, Appendix A, Criterion 3 "Fire Protection."

17. NRC Policy Issue SECY-97-087, "Policy, Technical and Licensing Issues Pertaining to Evolutionary and Advanced Light Water Reactor (ALWR) Designs," Section I.E, "Fire Protection."

18. IEEE Standard for Flame Testing of Cables for Use in Cable Tray in Industrial and Commercial Occupancies, IEEE Std. 1202 - 1991.

19. Standard Practices for Medium Speed Stationary Diesel and Gas Engines, Sixth Edition, Diesel Engine Manufacturers Association, 1972. (Note: Although this standard is obsolete, the guidance for distillate fuel systems in Chapter 13 is applicable for AP1000.)

20. WCAP-15871, Revision 1, "AP1000 Assessment Against NFPA 804," December 2002.

21. NRC Bulletin 80-15, "Possible Loss of Emergency Notification System (ENS) with Loss of Offsite Power," June 18, 1980.

22. APP-GW-GLR-027, "Operator Actions Minimizing Spurious ADS Actuations," Westinghouse Electric Company LLC.

23. APP-GW-GLR-019, "Fire Resistance Test Data," Westinghouse Electric Company LLC.

24. APP-GW-GLR-120, “Cathodic Protection for Metal Tanks in Contact with the Ground,” Westinghouse Electric Company LLC.

Table 9.5.1-1 (Sheet 1 of 33)

AP1000 FIRE PROTECTION PROGRAM COMPLIANCE WITH BTP CMEB 9.5-1

BTP CMEB 9.5-1 Guideline	Paragraph	Comp[1]	Remarks
Fire Protection Program			
1. Direction of fire protection program; availability of personnel.	C.1.a(1)	WA	See Note 2
2. Defense-in-depth concept; objective of fire protection program.	C.1.a(2)	WA	See Note 2
3. Management responsibility for overall fire protection program; delegation of responsibility to staff.	C.1.a(3)	WA	See Note 2
4. The staff should be responsible for: (a) Fire protection program requirements. (b) Post-fire shutdown capability. (c) Design, maintenance, surveillance, and quality assurance of fire protection features. (d) Fire prevention activities. (e) Fire brigade organization and training. (f) Prefire planning.	C.1.a(3)	WA	See Note 2
5. The organizational responsibilities and lines of communication pertaining to fire protection should be defined through the use of organizational charts and functional descriptions.	C.1.a(4)	WA	See Note 2
6. Personnel qualification requirements for fire protection engineer, reporting to the position responsible for formulation and implementation of the fire protection program.	C.1.a(5)(a)	WA	See Note 2
7. The fire brigade members' qualifications should include a physical examination for performing strenuous activity, and the training described in Position C.3.d.	C.1.a(5)(b)	WA	See Note 2
8. The personnel responsible for the maintenance and testing of the fire protection systems should be qualified by training and experience for such work.	C.1.a(5)(c)	WA	See Note 2
9. The personnel responsible for the training of the fire brigade should be qualified by training and experience for such work.	C.1.a(5)(d)	WA	See Note 2

Table 9.5.1-1 (Sheet 2 of 33)

AP1000 FIRE PROTECTION PROGRAM COMPLIANCE WITH BTP CMEB 9.5-1

BTP CMEB 9.5-1 Guideline	Paragraph	Comp[1]	Remarks
10. The following NFPA publications should be used for guidance to develop the fire protection program: No. 4, No. 4A, No. 6, No. 7, No. 8, and No. 27.	C.1.a(6)	WA	See Note 2
11. On sites where there is an operating reactor, and construction or modification of other units is underway, the superintendent of the operating plant should have a lead responsibility for site fire protection.	C.1.a(7)	WA	See Note 2
Fire Protection Analysis			
12. The fire protection analysis should demonstrate that the plant will maintain the capability to perform safe shutdown functions and minimize radioactive releases to the environment in the event of a fire.	C.1.b	C	
13. The fire protection analysis should be performed by fire protection and reactor systems engineers to (1) consider potential in situ and transient fire hazards; (2) determine the consequences of a fire in any location in the plant; and (3) specify measures for fire prevention, detection, suppression, and containment.	C.1.b	C	
14. Fires involving facilities shared between units should be considered.	C.1.b	WA	
15. Fires due to man-made site-related events that have a reasonable probability of occurring and affecting more than one reactor unit should be considered.	C.1.b	WA	To be evaluated on a site-specific basis. Plant siting decisions are expected to preclude the need to consider such events.
16. Establishing three levels of fire damage limits according to safety function (hot shutdown, cold shutdown and design basis accidents).	C.1.b	C	AP1000 uses two levels of damage limits: safe shutdown and design basis accidents. Safe shutdown capability is protected from damage caused by a single fire.
17. The fire protection analysis should separately identify hazards and provide appropriate protection in locations where safety-related losses can occur.	C.1.b	C	

Table 9.5.1-1 (Sheet 3 of 33)

AP1000 FIRE PROTECTION PROGRAM COMPLIANCE WITH BTP CMEB 9.5-1

BTP CMEB 9.5-1 Guideline	Paragraph	Comp[1]	Remarks
Fire Suppression System Design Basis			
18. Total reliance should not be placed on a single fire suppression system. Backup fire suppression capability should be provided.	C.1.c(1)	C	Automatic fire suppression systems are backed up by manual suppression systems (standpipe) and portable extinguishers.
19. A single active failure or a crack in a fire suppression system moderate energy line should not impair both the primary and backup fire suppression capabilities.	C.1.c(2)	AC	Criteria followed except for containment and outlying buildings. The fire suppression systems located inside the containment are qualified to seismic Category I criteria, which reduces the potential for a failure of the system. The buildings outside the auxiliary building do not contain safety-related equipment, or present an exposure hazard to structures containing safety-related equipment. Manual fire suppression capability using hose lines connected to the outside hydrants of the yard main can be provided in the event of a failure of the interior fire suppression systems.
20. The fire suppression system should be capable of delivering water to manual hose stations located within hose reach of areas containing equipment required for safe shutdown following a safe shutdown earthquake (SSE).	C.1.c(3)	AC	Criteria followed except for the PCS valve room, Room 12701 (Fire Zone 1270 AF 12701). The quantity of combustible material in this fire zone is extremely low, consisting primarily of cable insulation related to the six PCS valves and related PCS instrumentation. Portable fire extinguishers are provided on both the lower level (El. 264′-6″) and the upper level (El. 286′-6″) of the PCS valve room for manual fire fighting.

Table 9.5.1-1 (Sheet 4 of 33)

AP1000 FIRE PROTECTION PROGRAM COMPLIANCE WITH BTP CMEB 9.5-1

BTP CMEB 9.5-1 Guideline	Paragraph	Comp[1]	Remarks
Fire Suppression System Design Basis			
21. Fire protection systems should retain their design capability for natural phenomena of less severity and greater frequency than the most severe natural phenomena.	C.1.c(4)	C	Structures housing the fire protection system meet the applicable requirements of Chapter 3 to provide protection from natural phenomena.
22. Fire protection systems should retain their original design capability for potential man-made, site-related events that have a reasonable probability of occurring at a specific plant site.	C.1.c(4)	WA	To be evaluated on a site-specific basis. Plant siting decisions are expected to preclude the need to consider such events.
23. The effects of lightning strikes should be included in the overall plant fire protection program.	C.1.c(4)	C	Lightning protection will be provided per NFPA 780.
24. The consequences of inadvertent operation or of a crack in a moderate energy line in the fire suppression system should meet the guidelines specified for moderate energy systems outside containment in SRP Section 3.6.1.	C.1.c(5)	C	
Alternate or Dedicated Shutdown			
25. Alternative or dedicated shutdown capability should be provided where the protection of systems whose functions are required for safe shutdown is not provided by established fire suppression methods or by Position C.5.b.	C.1.d	AC	In Generic Letter (GL) 86-10, the staff stated its position that, for the purpose of analysis to Section III.G.2 of Appendix R to 10 CFR Part 50 criteria, the safe shutdown capability is defined as one of the two normal safe shutdown trains. The safety-related PXS and PCS are used to achieve and maintain safe shutdown following a fire and are acceptable as an alternative/ dedicated shutdown method for fire areas where the normal shutdown systems have not been protected in accordance with the guidance prescribed in the BTP.

Table 9.5.1-1 (Sheet 5 of 33)

AP1000 FIRE PROTECTION PROGRAM COMPLIANCE WITH BTP CMEB 9.5-1

BTP CMEB 9.5-1 Guideline	Paragraph	Comp[1]	Remarks
Fire Protection Program Implementation			
26. The fire protection program for buildings storing new reactor fuel and for adjacent fire areas that could affect the fuel storage area should be fully operational before fuel is received at the site.	C.1.e(1)	WA	See Note 2
27. The fire protection program for an entire reactor unit should be fully operational prior to initial fuel loading in that unit.	C.1.e(2)	WA	See Note 2
28. Special considerations for the fire protection program on reactor sites where there is an operating reactor and construction or modification of other units is under way.	C.1.e(3)	WA	See Note 2
29. Establishing administrative controls to maintain the performance of the fire protection system and personnel.	C.2	WA	See Note 2
Fire Brigade			
30. The guidance in Regulatory Guide 1.101 should be followed as applicable.	C.3.a	WA	See Note 2
31. Establishing site brigade: minimum number of fire brigade members on each shift; qualification of fire brigade members; competence of brigade leader.	C.3.b	WA	See Note 2
32. The minimum equipment provided for the brigade should consist of turnout coats, boots, gloves, hard hats, emergency communications equipment, portable ventilation equipment, and portable extinguishers.	C.3.c	WA	See Note 2
33. Recommendations for breathing apparatus for fire brigade, damage control, and control room personnel.	C.3.c	WA	See Note 2. A breathing air compressor and receiver is provided in the compressed and instrument air system (CAS) to replenish the exhausted air supply bottles used by the fire brigade. Additionally, an equivalent 6-hour supply of reserve air (e.g., the 12 additional SCBA bottles) will be maintained in an area located outside of the turbine building. See subsection 9.3.1 for further information.

Table 9.5.1-1 (Sheet 6 of 33)

AP1000 FIRE PROTECTION PROGRAM COMPLIANCE WITH BTP CMEB 9.5-1

BTP CMEB 9.5-1 Guideline	Paragraph	Comp[1]	Remarks
34. Recommendations for the fire brigade training program.	C.3.d	WA	See Note 2
Quality Assurance Program			
35. Establishing quality assurance (QA) programs by applicants and contractors for the fire protection systems for safety-related areas; identification of specific criteria for quality assurance programs.	C.4	WA	Fire protection quality assurance programs are incorporated in procurement documents. Deviations are evaluated and controlled. See Items 1. through 11. of this table for on-site implementation. See Note 2.
Building Design			
36. Fire barriers with a minimum fire resistance rating of 3 hours should be provided to separate safety-related systems from any potential fires in nonsafety-related areas.	C.5.a(1)(a)	C	Structures housing safety-related systems are separated from nonsafety-related structures by 3-hour rated fire walls.
37. Fire barriers with a minimum fire resistance rating of 3 hours should be provided to separate redundant divisions of safety-related systems from each other.	C.5.a(1)(b)	C	See subsection 9.5.1.2.1.1 for discussion of exceptions for the containment, main control room, and remote shutdown room.
38. Fire barriers with a minimum fire resistance rating of 3 hours should be provided to separate individual units on a multiple-unit site.	C.5.a(1)(c)	NA	See discussion of GDC 5 in subsection 3.1.1. The AP1000 is a single-unit plant.
39. Fire barriers should be provided within a single safety division to separate components or cabling that present a fire hazard to other safety-related components.	C.5.a (2)	C	
40. Openings through fire barriers for pipe, conduit, and cable trays that separate fire areas should be sealed or closed to provide a fire resistance rating equal to that required of the barrier.	C.5.a (3)	C	
41. Recommendations for internal sealing of conduits penetrating fire barriers.	C.5.a (3)	C	

Table 9.5.1-1 (Sheet 7 of 33)

AP1000 FIRE PROTECTION PROGRAM COMPLIANCE WITH BTP CMEB 9.5-1

BTP CMEB 9.5-1 Guideline	Paragraph	Comp[1]	Remarks
42. Fire barrier penetrations that must maintain environmental isolation or pressure differentials should be qualified by test.	C.5.a (3)	C	Fire penetration seals that also perform other barrier functions are qualified by test for intended functions. The fire barrier penetration seal does not perform other barrier functions simultaneously.
43. Penetration designs should use only noncombustible materials.	C.5.a (3)	C	
44. The penetration qualification tests should use the time-temperature exposure curve specified by ASTM E-119.	C.5.a (3)	C	
45. Criteria for penetration qualification tests.	C.5.a (3)	C	
46. Penetration openings for ventilation systems should be protected by fire dampers having a rating equivalent to that required of the barrier.	C.5.a (4)	C	Penetration openings are protected in accordance with NFPA 90A. Fire dampers generally not provided for roof or exterior wall penetrations.
47. Flexible air duct couplings in ventilation and filter systems should be noncombustible.	C.5.a (4)	C	
48. Door openings in fire barriers should be protected with equivalently rated doors, frames, and hardware that have been tested and approved by a nationally recognized lab.	C.5.a (5)	C	
49. Fire doors should be self-closing or provided with closing mechanisms.	C.5.a (5)	C	
50. Fire doors should be inspected semiannually to verify that automatic hold-open, release, and closing mechanisms and latches are operable.	C.5.a (5)	WA	See Note 2
51. Alternative means for verifying that fire doors protect the door opening as required in case of fire.	C.5.a (5)	WA	See Note 2
52. The fire brigade leader should have ready access to keys for any locked fire doors.	C.5.a (5)	WA	See Note 2

Table 9.5.1-1 (Sheet 8 of 33)

AP1000 FIRE PROTECTION PROGRAM COMPLIANCE WITH BTP CMEB 9.5-1

BTP CMEB 9.5-1 Guideline	Paragraph	Comp[1]	Remarks
53. Areas protected by automatic total flooding gas suppression systems should have electrically supervised self-closing fire doors or should satisfy guideline (49) above.	C.5.a (5)	NA	No automatic gas suppression systems are used on AP1000.
54. Personnel access routes and escape routes should be provided for each fire area.	C.5.a (6)	C	
55. Stairwells serving as escape routes, access routes for firefighting, or access routes to areas containing equipment necessary for safe shutdown should be enclosed in masonry or concrete towers with a minimum fire resistance rating of 2 hours and self-closing Class B fire doors.	C.5.a(6)	AC WA	AP1000 deviates from this guideline with a design that meets applicable building codes and fire protection requirements. Auxiliary building stairwells are enclosed in towers constructed using both concrete structural walls and nonstructural walls, consisting of a concrete/steel composite material, having a fire resistance rating of at least 2 hours, and self-closing doors, having a rating of 1.5 hours. The two-hour fire-resistance test data for the concrete/steel composite material is in accordance with ASTM E-119 and NFPA 251 acceptance criteria to ensure that the stairwell fire-related enclosure will be maintained in accordance with Regulatory Position C.5.a.6 of BTP CMEB 9.5-1. There are no missile hazards in the vicinity of such stairwells. This alternative protection provides an equivalent level of safety as that prescribed in the BTP.

Table 9.5.1-1 (Sheet 9 of 33)

AP1000 FIRE PROTECTION PROGRAM COMPLIANCE WITH BTP CMEB 9.5-1

BTP CMEB 9.5-1 Guideline	Paragraph	Comp[1]	Remarks
56. Fire exit routes should be clearly marked.	C.5.a (7)	WA	See Note 2
57. Each cable spreading room should contain only one redundant safety division.	C.5.a (8)	NA	There are no cable spreading rooms in AP1000.
58. Cable spreading rooms should be separated from each other and from other areas of the plant by barriers having a minimum fire resistance of 3 hours.	C.5.a (8)	NA	There are no cable spreading rooms in AP1000.
59. Interior wall and structural components, thermal insulation materials, radiation shielding materials, and soundproofing materials should be noncombustible.	C.5.a (9)	C	
60. Interior finishes should be noncombustible.	C.5.a (9)	C	
61. Metal deck roof construction should be noncombustible and listed as "acceptable for fire" in the UL Building Materials Directory, or listed as Class I in the Factory Mutual Approval Guide.	C.5.a (10)	C	
62. Suspended ceilings and their supports should be of noncombustible construction.	C.5.a (11)	C	
63. Concealed spaces should be devoid of combustibles except as noted in Position C.6.b.	C.5.a(11)	AC	Underfloor or ceiling spaces, contain combustible cable insulation in the main control room, control support area and remote shutdown room. Fire detectors are provided in these areas. The cables used in the plant are qualified in accordance with the criteria specified in IEEE 1202. This alternative protection provides an equivalent level of safety as that specified in the BTP.
64. Transformers installed inside fire areas containing safety-related systems should be of the dry type or insulated and cooled with noncombustible liquid.	C.5.a(12)	C	

Table 9.5.1-1 (Sheet 10 of 33)

AP1000 FIRE PROTECTION PROGRAM COMPLIANCE WITH BTP CMEB 9.5-1

BTP CMEB 9.5-1 Guideline	Paragraph	Comp[1]	Remarks
65. Outdoor oil-filled transformers should have oil containment features or drainage away from the buildings.	C.5.a(13)	C	
66. Outdoor oil-filled transformers should be located at least 50 feet distant from the building, or building walls within 50 feet of oil-filled transformers should be without openings and have a 3-hour fire resistance rating.	C.5.a (13)	C	
67. Floor drains sized to remove expected firefighting water flow without flooding safety-related equipment should be provided in areas where fixed water fire suppression systems are installed.	C.5.a (14)	C	
68. Floor drains should be provided in areas where hand hose lines may be used if such firefighting water could cause unacceptable damage to safety-related equipment.	C.5.a (14)	C	
69. Where gas suppression systems are installed, the drains should be provided with adequate seals, or the gas suppression system should be sized to compensate for the loss of the suppression agent through the drains.	C.5.a (14)	NA	No fixed gas suppression systems are used on AP1000.
70. Drains in areas containing combustible liquids should have provisions for preventing the back flow of combustible liquids to safety-related areas through the interconnected drain systems.	C.5.a (14)	C	
71. Water drainage from areas that may contain radioactivity should be collected, sampled, and analyzed before discharge to the environment.	C.5.a(14)	WA	See Note 2. Capability is provided.
Safe Shutdown Capability			
72. Fire damage should be limited so that one train of systems necessary to achieve and maintain hot shutdown conditions from either the main control room or emergency control station is free of fire damage.	C.5.b(1)	C	

Table 9.5.1-1 (Sheet 11 of 33)

AP1000 FIRE PROTECTION PROGRAM COMPLIANCE WITH BTP CMEB 9.5-1

BTP CMEB 9.5-1 Guideline	Paragraph	Comp[1]	Remarks
73. Fire damage should be limited so that systems necessary to achieve and maintain cold shutdown from either the control room or emergency control station can be repaired within 72 hours.	C.5.b (1)	AC	Safe shutdown following a fire is defined for the AP1000 as the ability to achieve and maintain the reactor coolant system (RCS) temperature below 215.6°C (420°F) without uncontrolled venting of the primary coolant from the RCS. This is a departure from the criteria applied to the evolutionary plant designs, and the existing plants where safe shutdown for fires applies to both hot and cold shutdown capability. AP1000 can maintain safe shutdown conditions indefinitely. Therefore, repairs to systems necessary to reach cold shutdown need not be completed within 72 hours.
74. Separation requirements for verifying that one train of systems necessary to achieve and maintain hot shutdown is free of fire damage.	C.5.b (2)	C	

Table 9.5.1-1 (Sheet 12 of 33)

AP1000 FIRE PROTECTION PROGRAM COMPLIANCE WITH BTP CMEB 9.5-1

BTP CMEB 9.5-1 Guideline	Paragraph	Comp[1]	Remarks
75. Provision of alternative or dedicated shutdown capability in certain fire areas.	C.5.b (3)	AC	In Generic Letter (GL) 86-10, the staff stated its position that, for the purpose of analysis to Section III.G.2 of Appendix R to 10 CFR Part 50 criteria, the safe shutdown capability is defined as one of the two normal safe shutdown trains. The safety-related PXS and PCS are used to achieve and maintain safe shutdown following a fire and are acceptable as an alternative/dedicated shutdown method for fire areas where the normal shutdown systems have not been protected in accordance with the guidance prescribed in the BTP.
76. Alternative or dedicated shutdown capability.	C.5.c	NC	In Generic Letter (GL) 86-10, the staff stated its position that, for the purpose of analysis to Section III.G.2 of Appendix R to 10 CFR Part 50 criteria, the safe shutdown capability is defined as one of the two normal safe shutdown trains. The safety-related PXS and PCS are used to achieve and maintain safe shutdown following a fire and are acceptable as an alternative/dedicated shutdown method for fire areas where the normal shutdown systems have not been protected in accordance with the guidance prescribed in the BTP.

Table 9.5.1-1 (Sheet 13 of 33)

AP1000 FIRE PROTECTION PROGRAM COMPLIANCE WITH BTP CMEB 9.5-1

BTP CMEB 9.5-1 Guideline	Paragraph	Comp[1]	Remarks
			The criteria concerning cold shutdown capability deviates from the criteria applied to the evolutionary reactor designs, but is consistent with the criteria applicable to existing plants. To enhance the survivability of the normal safe shutdown and cold shutdown capability in the event of a fire, and to reduce the reliance on the infrequently utilized safety-related passive systems, automatic suppression or physical separation is provided in those fire areas outside containment where a fire could damage the normal shutdown capability. This criterion does not ensure that the normal shutdown capability will be free of fire damage, or that the equipment necessary to achieve and maintain cold shutdown can be repaired within 72 hours.
Control of Combustibles			
77. Safety-related systems should be separated from combustible materials where possible; where not possible, special protection should be provided to help prevent a fire from defeating the safety system function.	C.5.d (1)	C	Concentrations of combustible materials are located outside structures containing safety-related components. Where this is not possible, appropriate fire protection is provided (see Appendix 9A).

Table 9.5.1-1 (Sheet 14 of 33)

AP1000 FIRE PROTECTION PROGRAM COMPLIANCE WITH BTP CMEB 9.5-1

BTP CMEB 9.5-1 Guideline	Paragraph	Comp[1]	Remarks
78. Bulk gas storage (compressed or cryogenic) should not be permitted inside structures housing safety-related equipment. Flammable gases should be stored outdoors or in separate detached buildings.	C.5.d (2)	AC	Breathing air storage tanks for the main control room habitability system are safety-related and are provided with overpressure protection. There is no other bulk gas storage in structures housing safety-related equipment.
79. High pressure gas storage containers should be located with the long axis parallel to building walls.	C.5.d (2)	C	
80. Use of compressed gases inside buildings should be controlled.	C.5.d (2)	WA	See Note 2
81. The use of plastic materials should be minimized. Halogenated plastics such as polyvinyl chloride (PVC) and neoprene should be used only when substitute noncombustible materials are not available.	C.5.d (3)	C	
82. Storage of flammable liquids should comply with NFPA 30.	C.5.d (4)	C	See Note 3
83. Hydrogen lines in safety-related areas should be either designed to seismic Category I requirements, or sleeved, or equipped with excess flow valves.	C.5.d (5)	C	Hydrogen lines in safety-related areas are designed to seismic Category I requirements.
Electrical Cable Construction, Cable Trays, and Cable Penetrations			
84. Only metal should be used for cable trays.	C.5.e (1)	C	Cable trays are of all-metal construction.
85. Only metallic tubing should be used for conduit. Thin-wall metallic tubing should not be used.	C.5.e (1)	C	Conduit that is not buried or embedded in concrete is metallic.
86. Flexible metallic tubing should only be used in short lengths to connect components to equipment.	C.5.e (1)	C	
87. Other raceways should be made of noncombustible materials.	C.5.e (1)	C	

Table 9.5.1-1 (Sheet 15 of 33)

AP1000 FIRE PROTECTION PROGRAM COMPLIANCE WITH BTP CMEB 9.5-1

BTP CMEB 9.5-1 Guideline	Paragraph	Comp[1]	Remarks
88. Redundant safety-related cable systems outside the cable spreading room should be separated from each other and from potential fire exposure hazards in nonsafety-related areas by 3-hour rated fire barriers.	C.5.e (2)	C	
89. These cable trays should be provided with continuous line-type heat detectors.	C.5.e (2)	C	
90. Cables should be designed to allow wetting down with fire suppression water without electrical faulting.	C.5.e (2)	C	
91. Redundant safety-related cable trays outside the cable spreading room should be accessible for manual firefighting. Manual hose stations and portable hand extinguishers should be provided.	C.5.e (2)	C	
92. Safety-related cable trays of a single division, which are separated from redundant divisions by a 3-hour rated fire barrier and are accessible for manual firefighting, should be protected from the effects of a potential exposure fire by providing automatic water suppression, unless specific conditions are met.	C.5.e (2)	C	Automatic water suppression is not provided because there is no significant exposure fire hazards and the specified conditions are met.
93. Safety-related cable trays that are not accessible for manual firefighting should be protected by an automatic water system.	C.5.e (2)	AC	Safety-related cable trays outside containment are accessible for manual firefighting. Protection of safe shutdown components inside containment is discussed in Appendix 9A.
94. Safety-related cable trays that are not separated from redundant divisions by 3-hour rated fire barriers should be protected by automatic water suppression systems.	C.5.e (2)	AC	Protection of safe shutdown components inside containment and the main control room is discussed in Appendix 9A.

Table 9.5.1-1 (Sheet 16 of 33)

AP1000 FIRE PROTECTION PROGRAM COMPLIANCE WITH BTP CMEB 9.5-1

BTP CMEB 9.5-1 Guideline	Paragraph	Comp[1]	Remarks
95. In areas where 3-hour fire barrier separation of redundant cable systems is precluded by overriding design considerations, the capability to achieve safe shutdown considering the effects of a fire involving fixed and transient combustibles should be evaluated with and without actuation of the automatic suppression system.	C.5.e (2)	C	
96. Electric cable construction should pass the flame test in IEEE Std 383.	C.5.e (3)	C	Use IEEE Standard 1202 or IEEE 383 excluding the option to use the alternate flame source, oil, or burlap.
97. Cable raceways should be used only for cables.	C.5.e (4)	C	
98. Miscellaneous storage and piping for combustible liquids or gases should not create a potential exposure hazard to safety-related systems.	C.5.e (5)	C	
Ventilation			
99. Smoke and corrosive gases should be discharged directly outside to an area that will not affect safety-related plant areas.	C.5.f (1)	C	
100. To facilitate manual firefighting, separate smoke and heat vents should be provided in certain areas.	C.5.f (1)	C	Smoke and heat venting capability is provided as described in Appendix 9A.
101. Release of smoke and gases containing radioactive materials to the environment should be monitored.	C.5.f (2)	C	
102. Any ventilation system designed to exhaust potentially radioactive smoke or gases should be evaluated to verify that inadvertent operation or single failures will not violate the radiologically controlled areas of the plant.	C.5.f (2)	C	
103. The power supply and control for mechanical ventilation systems should be run outside the fire area served by the system.	C.5.f (3)	C	

Table 9.5.1-1 (Sheet 17 of 33)

AP1000 FIRE PROTECTION PROGRAM COMPLIANCE WITH BTP CMEB 9.5-1

BTP CMEB 9.5-1 Guideline	Paragraph	Comp[1]	Remarks
104. Engineered safety feature filters should be protected in accordance with the guidelines of Regulatory Guide 1.52.	C.5.f (4)	NA	There are no engineered safety feature filters on AP1000.
105. Air intakes for ventilation systems serving areas containing safety-related equipment should be located remote from the exhaust air outlets and smoke vents of other fire areas.	C.5.f (5)	C	
106. Stairwells should be designed to minimize smoke infiltration during a fire.	C.5.f (6)	C	Stair towers are provided with self-closing doors. Additional measures to minimize smoke infiltration to stair-wells are described in Appendix 9A.
107. Where total flooding gas extinguishing systems are used, ventilation dampers should be controlled in accordance with NFPA 12 and NFPA 12A.	C.5.f (7)	NA	Fixed flooding gas suppression systems are not used on AP1000.
Lighting and Communication			
108. Fixed self-contained lighting units with individual 8-hour battery power supplies should be provided in areas that must be manned for safe shutdown and for access and egress routes to and from all fire areas.	C.5.g (1)	AC	Alternate emergency lighting is provided for the main control room and the remote shutdown workstation as described in subsection 9.5.3. Emergency lighting in other plant areas is provided by 8-hour battery-powered, fixed, self-contained units to provide safe ingress and egress of personnel and the operation of equipment following a fire, in the event of a loss of the normal lighting. Portable battery-powered lighting is provided for emergency use by plant personnel.
109. Sealed beam battery-powered portable hand lights should be provided for emergency use.	C.5.g (2)	C	

Table 9.5.1-1 (Sheet 18 of 33)

AP1000 FIRE PROTECTION PROGRAM COMPLIANCE WITH BTP CMEB 9.5-1

BTP CMEB 9.5-1 Guideline	Paragraph	Comp[1]	Remarks
110. Fixed emergency communications, independent of the normal plant communication system, should be installed at preselected stations.	C.5.g (3)	C	
111. A portable radio communications system should be provided for use by the fire brigade and other operations personnel required to achieve safe plant shutdown.	C.5.g (4)	WA	
Fire Detection			
112. Fire detection systems should be provided for areas that contain or present a fire exposure to safety-related equipment.	C.6.a (1)	C	
113. Fire detection systems should comply with the requirements of Class A systems as defined in NFPA 72D and Class I circuits as defined in NFPA 70.	C.6.a (2)	C	See Note 3
114. Fire detectors should be selected and installed in accordance with NFPA 72E.	C.6.a (3)	C	See Note 3
115. Testing of pulsed line-type heat detectors should demonstrate that the frequencies used will not affect the actuation of protective relays in other plant systems.	C.6.a (3)	C	
116. Fire detection systems should give audible and visual alarm and annunciation in the main control room.	C.6.a (4)	C	
117. Where zoned detection systems are used in a given fire area, local means should be provided to identify which zone has actuated.	C.6.a (4)	C	
118. Local audible alarms should sound in the fire area.	C.6.a(4)	C	
119. Fire alarms should be distinctive and unique so they will not be confused with any other plant system alarms.	C.6.a (5)	C	
120. Primary and secondary power supplies, which satisfy the provisions of Section 2220 of NFPA 72D, should be provided for the fire detection system and for electrically operated control valves for automatic suppression systems.	C.6.a (6)	C	See Note 3

Table 9.5.1-1 (Sheet 19 of 33)

AP1000 FIRE PROTECTION PROGRAM COMPLIANCE WITH BTP CMEB 9.5-1

BTP CMEB 9.5-1 Guideline	Paragraph	Comp[1]	Remarks
Fire Protection Water Supply Systems			
121. An underground yard fire main loop should be installed to furnish anticipated water requirements.	C.6.b (1)	C	An underground yard fire main loop is provided in accordance with NFPA 24.
122. Type of pipe and water treatment should be design considerations with tuberculation as one of the parameters.	C.6.b (1)	C	
123. Means of inspecting and flushing the systems should be provided.	C.6.b (1)	C	Flushing of the loop can be accomplished through the use of sectional control valves to direct the flow and yard hydrants to serve as discharge points.
124. Approved visually indicating sectional control valves should be provided to isolate portions of the yard fire main loop for maintenance or repair.	C.6.b (2)	C	Indicator valves are provided for sectionalized control and isolation of portions of the yard fire main loop.
125. Valves should be installed to permit isolation of outside hydrants from the fire main for maintenance or repair without interrupting the water supply to automatic or manual fire suppression systems.	C.6.b (3)	C	A visually indicating or key-operated valve is provided in each lateral from the yard fire main loop to a fire hydrant.
126. The fire main system piping should be separate from service or sanitary water system piping.	C.6.b (4)	C	
127. A common yard fire main loop may serve multi-unit nuclear power plant sites if cross-connected between units. Sectional control valves should permit maintaining independence of the loop around each unit.	C.6.b (5)	NA	See discussion of GDC 5 in subsection 3.1.1. The AP1000 is a single-unit plant.
128. A sufficient number of pumps should be provided so that 100 percent capacity will be available assuming failure of the largest pump or loss of offsite power.	C.6.b (6)	C	Two 100 percent capacity fire pumps (one diesel-driven and one electric motor-driven) are provided.
129. Individual fire pump connections to the yard fire main loop should be separated with sectionalizing valves between connections.	C.6.b (6)	C	

Table 9.5.1-1 (Sheet 20 of 33)

AP1000 FIRE PROTECTION PROGRAM COMPLIANCE WITH BTP CMEB 9.5-1

BTP CMEB 9.5-1 Guideline	Paragraph	Comp[1]	Remarks
130. Each pump and its driver and controls should be separated from the remaining fire pumps by a 3-hour rated fire wall.	C.6.b (6)	C	
131. The fuel for the diesel fire pump should be separated so that it does not provide a fire source exposing safety-related equipment.	C.6.b (6)	C	
132. Alarms indicating pump running, driver availability, failure to start, and low fire main pressure should be provided in the main control room.	C.6.b (6)	C	
133. The fire pump installation should conform to NFPA 20.	C.6.b (6)	C	See Note 3
134. Outside manual hose installation should be sufficient to provide an effective hose stream to any onsite location where fixed or transient combustibles could jeopardize safety-related equipment. Hydrants should be installed approximately every 250 feet on the yard main system.	C.6.b (7)	C	
135. Recommendations for hose houses and hose carts.	C.6.b (7)	C	
136. Threads compatible with those used by local fire departments should be provided on all hydrants, hose couplings, and standpipe risers.	C.6.b (8)	C	
137. Two separate, reliable freshwater supplies should be provided.	C.6.b (9)	C	Two water storage tanks are provided.
138. Recommendations for tanks used to supply fire protection water.	C.6.b (9)	C	See Note 3

Table 9.5.1-1 (Sheet 21 of 33)

AP1000 FIRE PROTECTION PROGRAM COMPLIANCE WITH BTP CMEB 9.5-1

BTP CMEB 9.5-1 Guideline	Paragraph	Comp[1]	Remarks
139. Recommendations for common tank used to supply fire protection water and other system.	C.6.b (10)	C	The configuration of the water supply for the seismic standpipe system is described in subsection 9.5.1.2.1. Both fire water supply tanks have a water volume that is dedicated for fire protection purposes. The fire pumps can be aligned through normally closed valves or through temporary connections to supply water for post-accident services. These include refilling of the passive containment cooling water supply tank or supplying the containment spray following a severe accident. This provides adequate defense in depth and will not adversely affect the performance of the fire protection water supply.
140. The fire water supply should be based on the largest expected flow rate for a period of 2 hours, but not less than 300,000 gallons.	C.6.b (11)	C	
141. The fire water supply should be capable of delivering the design demand over the longest route of the water supply systems.	C.6.b (11)	C	
142. Recommendations for freshwater lakes or ponds used to supply fire protection water.	C.6.b (12)	NA	Lakes or ponds are not utilized for fire protection water supply.
143. Recommendations concerning use of a common water supply for fire protection and the ultimate heat sink.	C.6.b (13)	C	
144. Recommendations concerning use of other water systems as the source of fire protection water.	C.6.b (14)	NA	The fire protection system does not rely on the operation of another water system as a second water source.

Table 9.5.1-1 (Sheet 22 of 33)

AP1000 FIRE PROTECTION PROGRAM COMPLIANCE WITH BTP CMEB 9.5-1

BTP CMEB 9.5-1 Guideline	Paragraph	Comp[1]	Remarks
Water Sprinkler and Hose Standpipe Systems			
145. Recommendations concerning connection of sprinkler systems and manual hose station standpipes to the yard fire main loop.	C.6.c (1)	AC	See remarks for Guideline 19.
146. Each sprinkler and standpipe system should be equipped with OS&Y gate valve or other approved shutoff valve and waterflow alarm.	C.6.c (1)	C	Waterflow alarms are provided for sprinkler and seismic standpipe systems only.
147. Safety-related equipment should be protected from sprinkler discharge if such discharge could result in unacceptable damage to the equipment.	C.6.c (1)	C	
148. Control and sectionalizing valves in the fire water systems should be electrically supervised (with indication in the main control room) or administratively controlled.	C.6.c (2)	C	
149. All valves in the fire protection system should be periodically checked to verify position.	C.6.c (2)	WA	See Note 2
150. Fixed water extinguishing systems should conform to requirements of NFPA 13 and NFPA 15.	C.6.c (3)	AC	Automatic sprinkler systems are designed and installed in accordance with the criteria specified in NFPA 13, with the exception of providing individual fire department connections to each sprinkler system. Because the sprinkler systems are supplied by the plant's fire protection water supply, individual connections are not necessary. See Note 3.
151. Recommendations for interior manual hose installations.	C.6.c (4)	C	
152. Individual standpipes should be at least 4 inches in diameter for multiple hose connections and 2-1/2 inches in diameter for single hose connections.	C.6.c (4)	C	

Table 9.5.1-1 (Sheet 23 of 33)

AP1000 FIRE PROTECTION PROGRAM COMPLIANCE WITH BTP CMEB 9.5-1

BTP CMEB 9.5-1 Guideline	Paragraph	Comp[1]	Remarks
153. Standpipe and hose station installations should follow the requirements of NFPA 14.	C.6.c (4)	AC	Standpipes for each building are designed and installed in accordance with the criteria specified in NFPA 14 for Class III service except: (1) the water supply to the standpipe inside containment is manually operated, and (2) the containment isolation valves controlling the water supply to standpipes inside containment are not listed by independent testing laboratories for fire protection service. These exceptions will not adversely affect the performance of the hose station and standpipe system. See Note 3.
154. Hose stations should be located as dictated by the fire hazard analysis to facilitate access and use for firefighting operations.	C.6.c (4)	C	
155. Recommendations concerning seismic design of standpipes and hose connections.	C.6.c (4)	C	
156. Recommendations concerning hose nozzle selection.	C.6.c (5)	C	
157. The fire hose should be hydrostatically tested in accordance with NFPA 1962. Hoses stored in outside hose houses should be tested annually. The interior standpipe hose should be tested every 3 years.	C.6.c (6)	WA	See Note 2
158. Consideration of foam suppression systems for flammable liquid fires.	C.6.c (7)	NA	Foam suppression systems are not used on AP1000.
Halon Suppression Systems			
159. Design and testing considerations for Halon fire suppression systems.	C.6.d	NA	Fixed Halon fire suppression systems are not used on AP1000.

Table 9.5.1-1 (Sheet 24 of 33)

AP1000 FIRE PROTECTION PROGRAM COMPLIANCE WITH BTP CMEB 9.5-1

BTP CMEB 9.5-1 Guideline	Paragraph	Comp[1]	Remarks
Carbon Dioxide Suppression Systems			
160. Carbon dioxide suppression systems should comply with the requirements of NFPA 12.	C.6.e	NA	Fixed carbon dioxide suppression systems are not used on AP1000.
161. Automatic carbon dioxide systems should be equipped with a predischarge alarm system and a discharge delay to permit personnel egress.	C.6.e	NA	Fixed carbon dioxide suppression systems are not used on AP1000.
162. Provisions for locally disarming automatic carbon dioxide systems should be key locked and under administrative control. Disarming of systems should be controlled as described in Position C.2.	C.6.e	NA	Fixed carbon dioxide suppression systems are not used on AP1000.
163. Considerations for design of carbon dioxide suppression systems.	C.6.e	NA	Fixed carbon dioxide suppression systems are not used on AP1000.
Portable Extinguishers			
164. Fire extinguishers should be provided in areas that contain, or could present a fire exposure hazard to, safety-related equipment in accordance with NFPA 10.	C.6.f	C	See Note 3
165. Dry chemical extinguishers should be installed with due consideration given to possible adverse effects on safety-related equipment.	C.6.f	C	
Primary and Secondary Containment			
166. Fire protection for the primary and secondary containment areas should be provided for hazards identified by the fire protection analysis.	C.7.a (1)	C	Fires are identified and fire suppression systems are provided accordingly.
167. Because of the general inaccessibility of primary containment during normal plant operation, protection should be provided by automatic fixed systems.	C.7.a (1)	AC	No automatic suppression systems are needed due to the sealless motor reactor coolant pumps (RCPs) having no external lube oil system. Automatic suppression is provided in one fire zone as described in Appendix 9A.

Table 9.5.1-1 (Sheet 25 of 33)

AP1000 FIRE PROTECTION PROGRAM COMPLIANCE WITH BTP CMEB 9.5-1

BTP CMEB 9.5-1 Guideline	Paragraph	Comp[1]	Remarks
168. Operation of the fire protection systems should not compromise the integrity of the containment or other safety-related systems.	C.7.a(1)(a)	C	
169. Recommendations for protection of safety-related cables and equipment inside non-inerted containments.	C.7.a(1)(b)	AC	See Appendix 9A for a description of protection inside containment.
170. Recommendations concerning fire detection inside the primary containment.	C.7.a(1)©	C	
171. Standpipe and hose stations inside containment may be connected to a high quality water supply of sufficient quantity and pressure other than the fire main loop if plant-specific features prevent extending the fire main supply inside containment.	C.7.a(1)(d)	C	
172. Recommendations for reactor coolant pump oil collection systems in non-inerted containments.	C.7.a(1)(e)	NA	The reactor coolant pumps are sealless motor pumps and do not require an oil collection system.
173. For secondary containment areas, cable fire hazards that could affect safety should be protected as described in Position C.5.e.(2).	C.7.a (1)(f)	NA	
174. Self-contained breathing apparatus should be provided near the containment entrances for firefighting and damage control personnel. These units should be independent of any breathing apparatus provided for general plant activities.	C.7.a (2)	WA	See Note 2
Main Control Room Complex			
175. The main control room complex should be separated from other areas of the plant by 3-hour rated fire barriers.	C.7.b	C	
176. Recommendations concerning peripheral rooms in the main control room complex.	C.7.b	NC	The MCR/tagging room wall is not fire-rated based on other design criteria. Manual fire suppression is provided for peripheral rooms. See Appendix 9A.

Table 9.5.1-1 (Sheet 26 of 33)

AP1000 FIRE PROTECTION PROGRAM COMPLIANCE WITH BTP CMEB 9.5-1

BTP CMEB 9.5-1 Guideline	Paragraph	Comp[1]	Remarks
177. Recommendations concerning the use of Halon and carbon dioxide flooding systems.	C.7.b	NA	No Halon or carbon dioxide flooding systems are used on AP1000.
178. Recommendations concerning manual firefighting capability in the main control room.	C.7.b	C	
179. Recommendations concerning fire detection in the main control room.	C.7.b	NC	Smoke detectors are not provided in cabinets and consoles. The control room is continuously occupied so that a fire is promptly detected and extinguished.
180. Breathing apparatus for main control room operators should be readily available.	C.7.b	WA	See Note 2
181. Recommendations concerning main control room ventilation.	C.7.b	C	
182. Cables that enter the main control room should terminate in the main control room.	C.7.b	C	
183. Cables in underfloor and ceiling spaces should meet the separation criteria necessary for fire protection.	C.7.b	C	
184. Air-handling functions should be ducted separately from cable runs in such spaces.	C.7.b	NC	The underfloor space is used as a distribution plenum for ventilation of the main control room. Smoke detectors in the underfloor space cause prompt closure of combination fire/smoke dampers to shut off air flow.
185. Fully enclosed electrical raceways located in underfloor and ceiling spaces, if over 1 ft^2 in cross-sectional area, should have automatic fire suppression inside.	C.7.b	NA	AP1000 does not have enclosed raceways in the control complex with a cross-sectional area greater than 1 ft^2.

Table 9.5.1-1 (Sheet 27 of 33)

AP1000 FIRE PROTECTION PROGRAM COMPLIANCE WITH BTP CMEB 9.5-1

BTP CMEB 9.5-1 Guideline	Paragraph	Comp[1]	Remarks
186. Recommendations concerning automatic fire suppression in underfloor and ceiling spaces.	C.7.b	NC	Manual fire suppression is to be used for underfloor and ceiling spaces. The control room is continuously occupied so that a fire is promptly detected and extinguished.
187. There should be no carpeting in the control room. Where carpeting has been installed (e.g., for sound abatement or other human factors), the carpeting should be tested to standards such as ASTM D2859, "Standard Test Method for Flammability of Finished Textile Floor Covering Materials," to establish the flammability characteristics of the material. These characteristics should be addressed in the fire hazards analysis.	C.7.b	C	The MCR carpeting has been addressed in the fire protection analysis. The carpet has a flammability rating of less that 0.45 CRF when tested to ASTM E-648 or NFPA 253 and a smoke development rating of less than 450 when tested to ASTM E-664.
Cable Spreading Room			
188. Design guidelines for the cable spreading room.	C.7.c	NA	There is no cable spreading room in AP1000.
189. Recommendations concerning fire protection for computers performing safety-related functions.	C.7.d	C	The data display and processing system does not perform safety-related functions.
190. Nonsafety-related computers outside the control room should be separated from safety-related areas by 3-hour rated fire barriers and should be protected as needed to prevent damage to safety-related equipment.	C.7.d	C	
Switchgear Rooms			
191. Switchgear rooms containing safety-related equipment should be separated from the remainder of the plant by 3-hour rated fire barriers. Redundant switchgear safety divisions should be separated from each other by 3-hour rated fire barriers.	C.7.e	C	The electrical equipment and penetration rooms associated with each safety-related division are separated from the rooms associated with other divisions and from the remaining areas of the plant by 3-hour rated fire barriers.

Table 9.5.1-1 (Sheet 28 of 33)

AP1000 FIRE PROTECTION PROGRAM COMPLIANCE WITH BTP CMEB 9.5-1

BTP CMEB 9.5-1 Guideline	Paragraph	Comp[1]	Remarks
192. Automatic fire detectors should alarm locally and alarm and annunciate in the main control room.	C.7.e	C	
193. Fire hose stations and portable fire extinguishers should be readily available outside the switchgear rooms.	C.7.e	C	
194. Drains should be provided to prevent water accumulation from damaging safety-related equipment.	C.7.e	C	
195. Remote manually actuated ventilation should be provided for venting smoke when manual fire suppression effort is needed.	C.7.e	C	See subsection 9.4.1 for a description of smoke removal capability for Class 1E equipment rooms.
Remote Safety-Related Panels			
196. Recommendations concerning separation and electrical isolation of remote safety-related panels.	C.7.f	C	
197. The general area housing remote safety-related panels should be provided with automatic fire detectors that alarm locally and alarm and annunciate in the main control room. Combustible materials should be controlled and limited to those required for operation. Portable extinguishers and manual hose stations should be readily available in the general area.	C.7.f	C	
Safety-Related Battery Rooms			
198. Safety-related battery rooms should be separated from each other and other areas of the plant by 3-hour rated fire barriers.	C.7.g	C	Safety-related battery rooms are separated from associated electrical rooms of the same division by 1-hour rated fire barriers.
199. Dc switchgear and inverters should not be located in safety-related battery rooms.	C.7.g	C	
200. Automatic fire detection should be provided to alarm locally and annunciate in the main control room.	C.7.g	C	

Table 9.5.1-1 (Sheet 29 of 33)

AP1000 FIRE PROTECTION PROGRAM COMPLIANCE WITH BTP CMEB 9.5-1

BTP CMEB 9.5-1 Guideline	Paragraph	Comp[1]	Remarks
201. Ventilation systems in the battery rooms should be capable of maintaining the hydrogen concentration below 2 percent.	C.7.g	C	
202. Main loss of ventilation should be alarmed in the main control room.	C.7.g	C	
203. Portable extinguishers and manual hose stations should be readily available outside the battery rooms.	C.7.g	C	
Turbine Building			
204. The turbine building should be separated from adjacent structures containing safety-related equipment by 3-hour rated fire barriers.	C.7.h	C	
205. The fire barriers should be designed to maintain structural integrity in the event of collapse of the turbine structure.	C.7.h	C	
206. Openings and penetrations in the fire barrier should be minimized and should not be located where the turbine oil system or generator hydrogen cooling system creates a fire exposure hazard to the barrier.	C.7.h	C	
Diesel Generator Areas			
207. Diesel generators should be separated from each other and from other areas of the plant by 3-hour rated fire barriers.	C.7.i	AC	The standby diesel generators are separated from each other by a 3-hour rated fire barrier and are housed in a separate structure, remote from safety-related areas. The ancillary diesel generators are separated from other areas of the plant by 3-hour rated fire barriers. The ancillary diesel generators are not separated from each other, but can be easily replaced with transportable diesel generators.

Table 9.5.1-1 (Sheet 30 of 33)

AP1000 FIRE PROTECTION PROGRAM COMPLIANCE WITH BTP CMEB 9.5-1

BTP CMEB 9.5-1 Guideline	Paragraph	Comp[1]	Remarks
208. Automatic fire suppression should be installed to combat diesel generator or lubricating oil fires. Such systems should be designed for operation when the diesel is running without affecting the diesel.	C.7.i	C	
209. Automatic fire detection should be provided to alarm locally and annunciate in the main control room.	C.7.i	NC	Automatic detection is provided for the diesel generator service modules only. The dry pipe sprinklers provide detection in the diesel generator and fuel storage rooms. This does not adversely affect safety.
210. Portable extinguishers and manual hose stations should be readily available outside the area.	C.7.i	C	
211. Drainage for firefighting water and means for local manual venting of smoke should be provided.	C.7.i	C	
212. Day tanks with total capacity up to 1100 gallons are permitted in the diesel generator area under specified conditions.	C.7.i	NC	Each DG day tank has a total capacity of up to 1500 gallons. Separate 3-hour enclosures and automatic suppression are provided. Tanks are located more than 50 feet from buildings containing safety-related equipment.
213. The day tank should be located in a separate enclosure with a 3-hour fire rating.	C.7.i	AC	The fuel supply for the ancillary diesel generators is not separated from the diesels by a barrier. The ancillary diesels and the tank are separated from the rest of the plant by an enclosure with a 3-hour fire rating.
214. The day tank enclosure should be capable of containing the entire contents of the tank.	C.7.i	C	
215. The day tank enclosure should be protected by an automatic fire suppression system.	C.7.i	C	

Table 9.5.1-1 (Sheet 31 of 33)

AP1000 FIRE PROTECTION PROGRAM COMPLIANCE WITH BTP CMEB 9.5-1

BTP CMEB 9.5-1 Guideline	Paragraph	Comp[1]	Remarks
Diesel Fuel Oil Storage Areas			
216. Recommendations concerning diesel fuel oil tanks.	C.7.j	C	
217. Above-ground tanks should be protected by an automatic fire suppression system.	C.7.j	AC	The diesel fuel oil storage tanks are well-separated from each other and from safety-related structures. Automatic fire suppression systems are not provided.
Safety Related Pumps			
218. Design guidelines for safety-related pump rooms.	C.7.k	NA	There are no safety-related pumps on AP1000.
New Fuel Area			
219. Recommendations for fire protection of the new fuel area.	C.7.l	C	
Spent Fuel Pool Areas			
220. Protection should be provided by hose stations and portable extinguishers.	C.7.m	C	
221. Automatic fire detection should be provided to alarm locally and annunciate in the main control room.	C.7.m	C	
Radwaste and Decontamination Areas			
222. Fire barriers, automatic fire suppression and detection, and ventilation controls should be provided.	C.7.n	C	Automatic fire suppression is provided for specific areas in accordance with the fire protection analysis.
Safety-Related Water Tanks			
223. Fire protection provisions for safety-related water tanks.	C.7.o	C	
Records Storage Areas			
224. Records storage areas should be so located and protected that a fire in these areas does not expose safety-related systems or equipment.	C.7.p	C	

Table 9.5.1-1 (Sheet 32 of 33)

AP1000 FIRE PROTECTION PROGRAM COMPLIANCE WITH BTP CMEB 9.5-1

BTP CMEB 9.5-1 Guideline	Paragraph	Comp[1]	Remarks
Cooling Towers			
225. Cooling towers should be of noncombustible construction or so located and protected that a fire will not adversely affect any safety-related systems or equipment.	C.7.q	WA	The cooling tower configuration is site-specific. See Note 2
226. Cooling towers should be of noncombustible construction when the basins are used for the ultimate heat sink or for the fire protection water supply.	C.7.q	NA	The cooling tower basin is not used for an ultimate heat sink or as a source of fire water.
Miscellaneous Areas			
227. Location and protection of miscellaneous areas.	C.7.r	C	
Storage of Acetylene-Oxygen Fuel Gases			
228. Gas cylinder storage locations should not be in areas that contain or expose safety-related equipment or the fire protection systems that serve those safety-related areas.	C.8.a	WA	See Note 2
229. A permit system should be required to use this equipment in safety-related areas of the plant.	C.8.a	WA	See Note 2
Storage Areas for Ion Exchange Resins			
230. Unused ion exchange resins should not be stored in areas that contain or expose safety-related equipment.	C.8.b	WA	See Note 2
Hazardous Chemicals			
231. Hazardous chemicals should not be stored in areas that contain or expose safety-related equipment.	C.8.c	WA	See Note 2
Materials Containing Radioactivity			
232. Materials that collect and contain radioactivity should be stored in closed metal tanks or containers that are located in areas free from ignition sources or combustibles.	C.8.d	C	
233. These materials should be protected from exposure to fires in adjacent areas.	C.8.d	C	

Table 9.5.1-1 (Sheet 33 of 33)

AP1000 FIRE PROTECTION PROGRAM COMPLIANCE WITH BTP CMEB 9.5-1

BTP CMEB 9.5-1 Guideline	Paragraph	Comp[1]	Remarks
234. Consideration should be given to requirements for removal of decay heat from entrained radioactive materials.	C.8.d	C	

Notes:

1. Compliance with NUREG-0800 Section 9.5.1, Branch Technical Position CMEB 9.5-1 is indicated by the following codes:
   - WA - Will Address: Per subsection 9.5.1.8.3.
   - C - Compliance: AP1000 is committed to compliance with the guideline.
   - AC - Alternate Compliance: compliance with the guideline by alternate means or intent. Alternative means or design are provided in the remarks column.
   - N/A - Not Applicable: The guideline is not applicable to AP1000.
   - NC - Not in Compliance: AP1000 is not in compliance (explanations in the remarks column.)
2. Procedures and administrative controls governing the fire protection program during plant operation, as well as responsibilities and organizational details for personnel involved in fire protection activities, are discussed in subsection 9.5.1.8.
3. It is intended to fully comply with NFPA standards referenced in subsection 9.5.5, as they apply to AP1000. However, due to conflicting design considerations, there may be a need to take exception to specific guidance. Known exceptions to NFPA requirements are identified in Table 9.5.1-3. Subsection 9.5.1.8 addresses updating the list of NFPA exceptions after design certification, if necessary.

Table 9.5.1-2

COMPONENT DATA - FIRE PROTECTION SYSTEM (NOMINAL VALUES)

Fire Water Storage Tanks	
Primary Fire Water Tank	
Nominal capacity (gal)	325,000
Volume dedicated to fire protection (gal)	300,000
Design Pressure	Atmospheric
Material	Carbon steel
Secondary Fire Water Tank	
Nominal capacity (gal)	490,000
Volume dedicated to fire protection (gal)	300,000
Design Pressure	Atmospheric
Material	Carbon steel
Fire Pumps	
Motor-Driven	
Pump type	Horizontal centrifugal
Rated flow (gpm)	2000
Required head, approximate (ft)	300
Structural material	Cast iron
Diesel-Driven	
Pump type	Horizontal centrifugal
Rated flow (gpm)	2000
Required head, approximate (ft)	300
Structural material	Cast iron
Fuel tank capacity (min. gal)	240
Motor-Driven Jockey Pump	
Pump type	Centrifugal
Rated flow (gpm)	30
Required head, approximate (ft)	210
Structural material	Cast iron
Containment Spray Nozzles	
Type	Lechler (SPRACO) 1713A
Number	68
Rated flow (gpm)	15.2
Rated pressure design (psi)	40
Structural material	Stainless steel

Table 9.5.1-3 (Sheet 1 of 2)

EXCEPTIONS TO NFPA STANDARD REQUIREMENTS

Requirement	AP1000 Exception or Clarification
NFPA 13 Sections 5-14.1.1.2 and 5-15.2 require fire department connections to individual sprinkler system headers, with no intervening shutoff valves.	Individual connections are not provided. Sprinkler systems are supplied from the proprietary fire water supply system, which can be accessed by the fire department at any hydrant along the yard main. Valves between these connection points and the sprinkler systems are electrically supervised or locked open.
NFPA 14 Section 2-5 requires that listed valves be used to control connections to standpipes.	Containment isolation valves controlling the water supply to standpipes inside containment are nuclear safety-related and meet or exceed the requirements for listed valves.
NFPA 14 Section 3-5 prohibits use of dry standpipes for Class II or Class III systems, and in areas not subject to freezing.	The standpipe system inside containment is classified as a dry standpipe system because it is normally isolated by the outboard containment isolation valve as described in subsection 9.5.1.2.1.5.
NFPA 14 Section 3-6.1 requires listed dial spring pressure gauges at specific locations.	Pressure instruments with remote readout at fire protection system panels are provided. These instruments meet or exceed the requirements for listed gauges.
NFPA 14 Section 4-2.2 requires an isolation valve for each standpipe.	One valve is used to isolate two or more short standpipes that supply a small number of hose stations.
NFPA 14 Sections 4-3 and 5-12 require fire department connections for each standpipe system, with no intervening shutoff valves.	Individual connections are not provided. Standpipe systems are supplied from the proprietary fire water supply system, which can be accessed by the fire department at any hydrant along the yard main. Valves between these connection points and the standpipe systems are electrically supervised or locked open, except as described in subsection 9.5.1.2.1.5.
NFPA 14 Section 5-3.2 requires Class I hose connections at each intermediate landing of exit stairways, on each side of horizontal exit openings, in each exit passageway, and on the roof or at the highest landing of stairways.	Class I hose connections are provided in exit stairways at one intermediate landing between most floors, and at other protected exit locations accessible to firefighters entering the buildings from outside. Flow testing of Class I hose connections is accomplished without providing additional connections on the roofs of buildings or at the highest stairway landings.
NFPA 14 Section 5-5 requires standpipes to be interconnected at the bottom, and when supplied by elevated tanks, also at the top.	Standpipes interconnections are constrained by layout considerations and do not always meet these requirements. Each standpipe receives an adequate water supply at an adequate pressure.
NFPA 14 Section 5-11.2 requires a separate drain connection for each standpipe.	For standpipes located outside radiologically controlled areas and supplied at an elevation above the lowest hose connection, the hose connection is used to provide a means of draining the standpipe.

Table 9.5.1-3 (Sheet 2 of 2)

EXCEPTIONS TO NFPA STANDARD REQUIREMENTS

Requirement	AP1000 Exception or Clarification
NFPA 22 contains requirements for water tanks and supply lines for private fire protection.	The seismic standpipe system is normally supplied from the passive containment cooling system (PCS) water storage tank as described in subsection 9.5.1.2.1.5. The passive containment cooling system tank and supply line are not designed to NFPA 22 but meet or exceed the applicable requirements of that standard.
NFPA 804 contains requirements specific to light water reactors.	Compliance with portions of this standard is as identified within Section 9.5.1 and WCAP-15871.

Table 9.5.1-4

CAPABILITIES USED TO ACHIEVE COLD SHUTDOWN FOLLOWING A FIRE

Function	System Capability	Fire Protection
RCS Reactivity Control - Short Term - Long Term	 - Control Rods - (1)	 - separation (6) - (1)
RCS Makeup	- (1)	- (1)
RCS Pressure Control - Increase - Decrease	 - Pressurizer heaters - (2)	 - fire suppression - (2)
Decay Heat Removal (high temperature)	- SFW pumps feeding CST water to SG - SG PORV discharge to atm.	- fire suppression - separation
Decay Heat Removal (cold temperature)	- RNS pumps circulating RCS - CCS cooling RNS - SWS cooling CCS	- separation - fire suppression - fire suppression
Decay Heat Removal (cold temperature alternate)	- RNS pump circulating RCS - FPS cooling RNS (7)	- separation - fire suppression
Process Monitoring	- RCS monitoring instruments (PMS) - Non-1E Instrumentation and Control (3)	- separation - fire suppression or separation
Support Systems	- Instrument Air - Standby Diesel Generators - Non-1E AC Power and Control (3)	- fire suppression - fire suppression and separation - fire suppression or separation

Notes:

(1) CVS makeup from the BAT provides RCS makeup and boration. Automatic suppression is provided in the CVS makeup pump room and in the Non-Class 1E equipment/penetration room. If the CVS is damaged by a fire, one CMT can provide this capability.

(2) CVS auxiliary spray provides pressurizer pressure reduction. Automatic suppression is provided in the CVS makeup pump room and in the Non-Class 1E equipment/penetration room. If the CVS is damaged by a fire, one ADS stage 1 valve used in a low capacity throttled vent mode of operation can slowly depressurize the RCS without loss of RCS pressure boundary.

(3) The portions of the non-1E AC power and the non-1E instrumentation and control system required are those needed to operate cold shutdown components; local control is sufficient (switchgear/control cabinet).

(4) Portions of the non-1E heating and ventilating systems are required to ventilate the main control room, non-1E switchgear rooms, and the required portions of the non-1E instrumentation and control system (see note 3).

(5) The term "separation" means that fire barriers provide separation of redundant components, including equipment, electrical cables, instrumentation and controls, except in the main control room, remote shutdown room, and containment. See section 9A.3.1.1 for discussion on containment and section 9A.3.1.2.5 for discussions on the main control room and remote shutdown room.

(6) Separation is provided for the reactor trip function. The reactor trip breakers are separated.

(7) Connection is provided to allow the fire protection system to furnish water to cool a normal residual heat removal (RNS) pump and heat exchanger following a fire that disables the normal CCS cooling function.

Table 9.5.2-1

COMMUNICATION EQUIPMENT[1] AND LOCATIONS

Provided for Operator Transient Response[2]
in Addition to Main Control Room and Remote Shutdown Room

Area Locator	Elevation	Primary Area/Location Served
1212	66′-6″	Divisions A, B, C, D Battery Rooms
1222	82′-6″	Divisions A, B, C, D dc Equipment Rooms
1121	96′-0″	Passive Core Cooling System Valve/Accumulator Rooms and Steam Generator
1123		Compartments
1124		
1231	100′-0″	Divisions A and C, I&C Rooms; Divisions B and D, I&C/Penetration Rooms; Valve/Piping Penetration Room
1234	107′-2″	Maintenance Floor Staging Area
1134	107′-2″	Maintenance Floor
1132		
1243	117′-6″	Non-1E Equipment/Penetration Room
1254	135′-3″	Access Corridor Serving Personnel Access Area
1151	135′-3″	Operating Deck
1152		
1251	135′-3″	MSIV Compartments
1162	159′-7″	Steam Generator Feedwater Nozzle Area
4014	100′-0″	Communications Room

Notes:
(1) Stations have Telephone/Page, PABX, and maintenance sound-power capability.
(2) See Standard Review Plan 9.5.2.

Table 9.5.4-1 (Sheet 1 of 2)

NOMINAL COMPONENT DATA
STANDBY DIESEL FUEL OIL SYSTEM

Above Ground Storage Tanks	
Service	Diesel engine supply
Quantity	2
Type	Vertical, cylindrical
Total available fuel capacity (gal) per tank	60,000
Available fuel reserved for diesel generator (gal) per tank	55,000
Excess fuel available for testing (gal) per tank	5,000
Operating pressure	Atmospheric
Operating temperature	Ambient
Diesel Oil Transfer System	
Fuel Oil Transfer Pumps	
Quantity	2
Type	Gear, positive displacement
Operating Flow (gpm)	8
Required design capacity (gpm)	30
Fuel Oil Strainer	
Quantity	2
Type	Duplex
Design Capacity (gpm)	30
Fuel Oil Heater	
Quantity	2
Type	Electric
Rating @30 gpm	90 kw
Fuel Oil Water Separator	
Quantity	2
Type	Pressurized/coalesced
Design Capacity (gpm)	30
Duplex Filters	
Quantity	2
Type	Duplex/stacked disc
Design Capacity (gpm)	30
Diesel Fuel Oil Day Tanks	
Quantity	2
Type	Horizontal, cylindrical
Minimum Design Capacity (gal)	1300
Available capacity (gal)	1200
Operating pressure	Atmospheric
Code	Non-Stamped ASME VIII

Table 9.5.4-1 (Sheet 2 of 2)

NOMINAL COMPONENT DATA
STANDBY DIESEL FUEL OIL SYSTEM

Ancillary Diesel Fuel Oil Tank	
Quantity	1
Type	Horizontal, cylindrical
Minimum Design Capacity (gal)	650
Available capacity (gal)	625
Operating pressure	Atmospheric
Code	Non-Stamped ASME VIII

Table 9.5.4-2

INDICATING AND ALARM DEVICES - STANDBY DIESEL FUEL SYSTEM

Parameter	Indication		Alarm	
	Control Room	Local	Control Room	Local
Fuel Oil Storage Tank Level - Diesel Oil (DO) Transfer	Yes	Yes	Yes	Yes
DO Day Tank Level	Yes	Yes	Yes	Yes
DO Transfer Pump Motor-Running Indication	Yes	Yes	No	No
DO Low Fuel Oil Pressure	Yes	Yes	Yes(1)	Yes
DO Water Separator Differential Pressure	Yes	Yes	Yes(1)	Yes
DO Filter Differential Pressure	Yes	Yes	Yes(1)	Yes
DO Pump Suction Strainer Differential Pressure	Yes	Yes	Yes(1)	Yes
DO Fuel Oil Heater in Service	Yes	Yes	Yes(1)	Yes
DO Fuel Oil Heater Temp Out	Yes	Yes	Yes(1)	Yes
Fuel Oil Tank Fill Strainer Differential Pressure	No	Yes	No(1)	Yes

Notes:
(1) Combined trouble alarm in control room

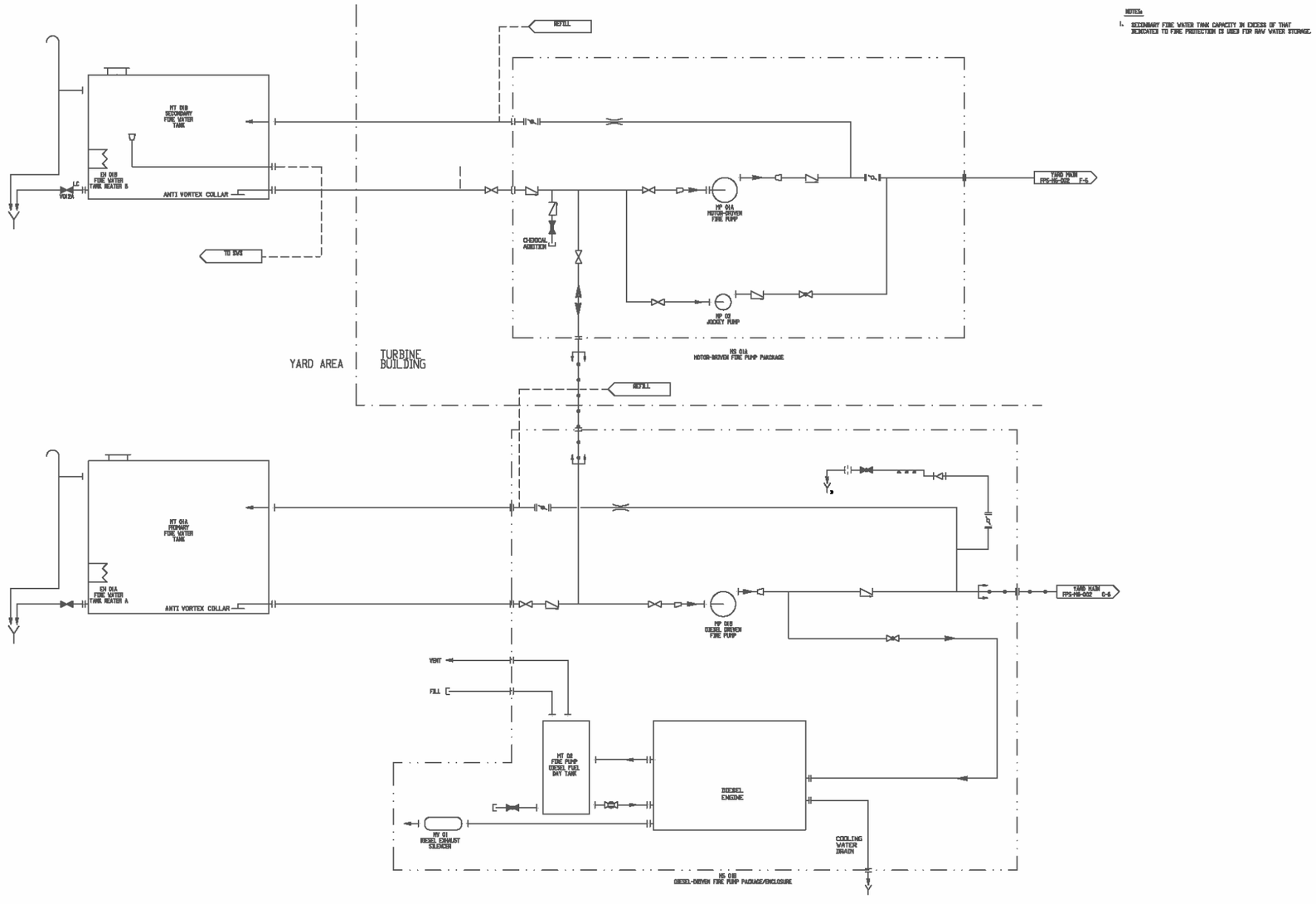

Figure 9.5.1-1 (Sheet 1 of 3)

Fire Protection System
Piping and Instrumentation Diagram
(REF FPS 001)

Figure represents system functional arrangement. Details internal to the system may differ as a result of implementation factors such as vendor-specific component requirements.

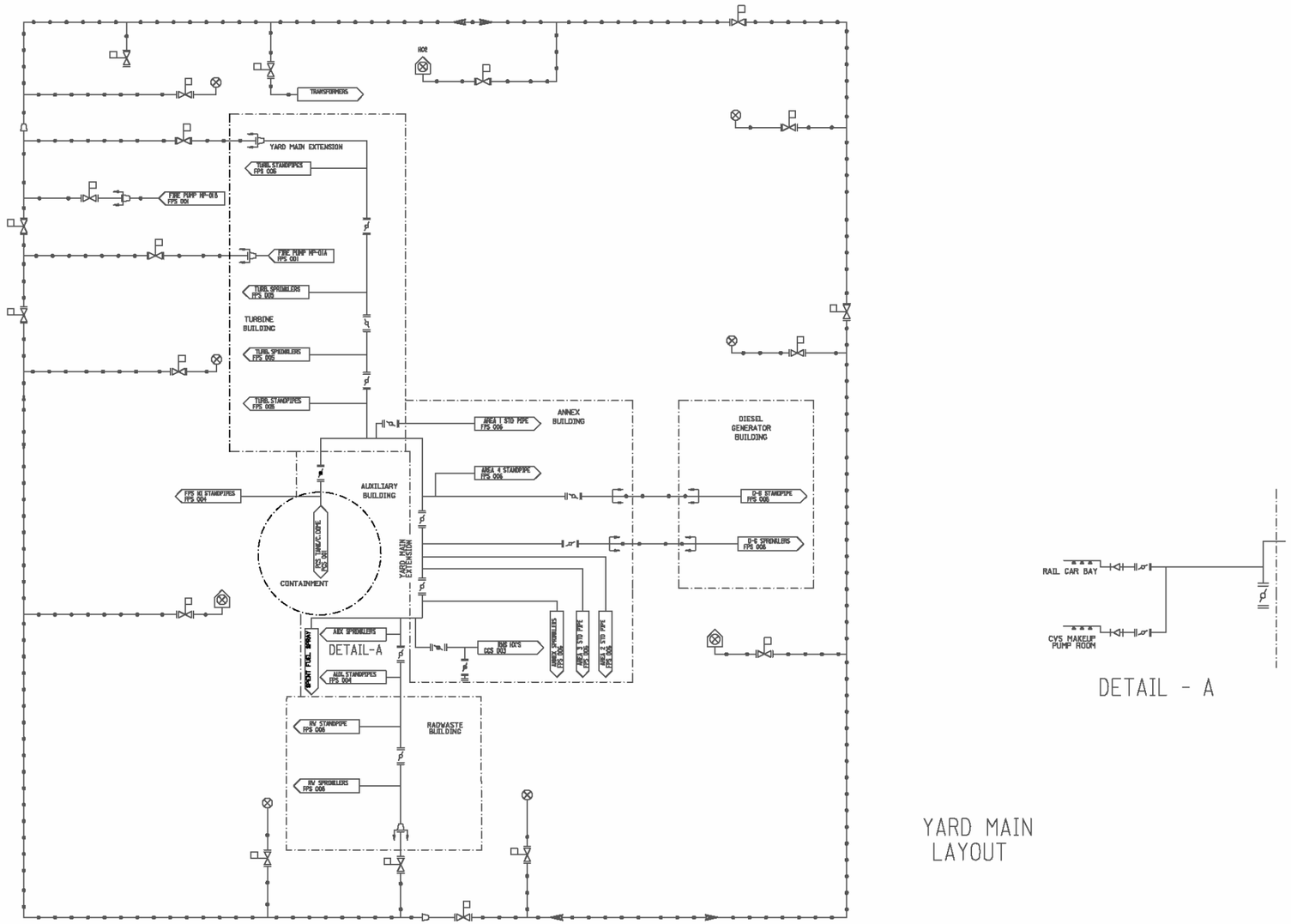

Figure 9.5.1-1 (Sheet 2 of 3)

Fire Protection System
Piping and Instrumentation Diagram
(REF) FPS 002, 004

Figure represents system functional arrangement. Details internal to the system may differ as a result of implementation factors such as vendor-specific component requirements.

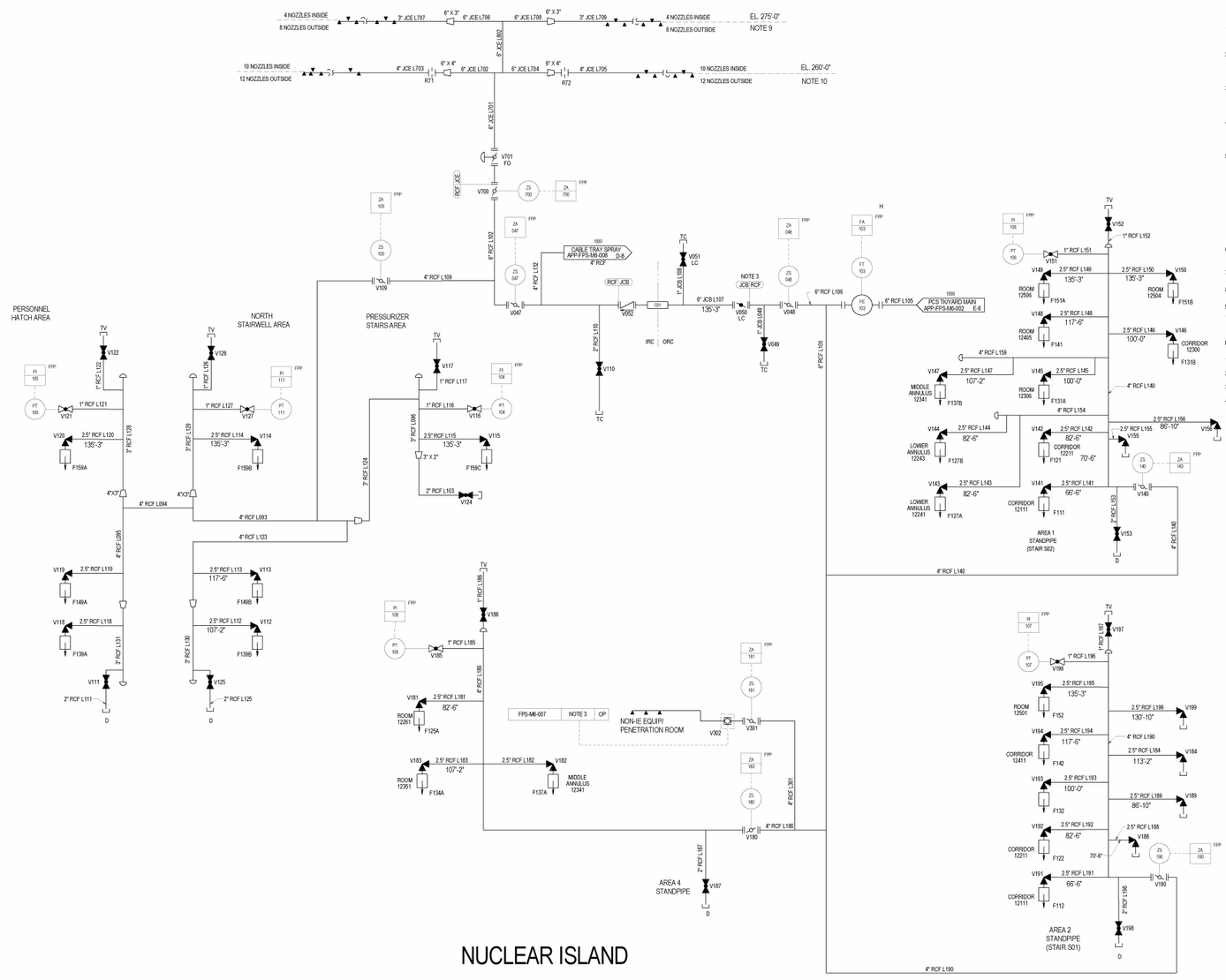

NOTES

1. THE SYSTEM LOCATOR CODE, APP-FPS, HAS BEEN OMITTED FROM ALL COMPONENT NUMBERS. EXCEPT FOR EQUIPMENT, THE COMPONENT TYPE CODE HAS ALSO BEEN OMITTED.
2. REPRESENTATION OF AUTOMATIC SUPPRESSION SYSTEM ACTUATION VALVES AND SPRINKLER PIPING IS SYMBOLIC ONLY. SEE DRAWING APP-FPS-M6-009, APP-FPS-M6-010 AND APP-FPS-M6-011 FOR VALVE DETAILS.
3. CLASS RCF STANDPIPE SYSTEM PIPING IS DESIGNED AND SUPPORTED SUCH THAT IT WILL REMAIN FUNCTIONAL FOLLOWING A SAFE SHUTDOWN EARTHQUAKE. FIRE PROTECTION QA REQUIREMENTS APPLY TO CLASS RCF STANDPIPE SYSTEMS (REFERENCE 4).
4. THE CONTAINMENT ISOLATION VALVE IS NORMALLY OPEN WHEN THE CONTAINMENT IS OCCUPIED DURING SHUTDOWN PERIODS. THE DRY STANDPIPE SYSTEM INSIDE CONTAINMENT NEED NOT BE DRAINED FOLLOWING CLOSURE OF THIS VALVE.
5. STANDPIPE SYSTEMS ARE NFPA CLASS III, WITH CLASS I HOSE CONNECTIONS AND CLASS II HOSE STATIONS. UP TO 100 FEET OF LINED 1-1/2 INCH FIRE HOSE IS NORMALLY CONNECTED AT EACH CLASS II HOSE STATION, WITH FITTINGS AVAILABLE TO PERMIT CONNECTION OF 2-1/2 INCH HOSES SUPPLIED BY FIREFIGHTERS. HOSE CONNECTION THREADS ARE PER NFPA 1963, UNLESS OTHERWISE APPROVED BY THE AUTHORITY HAVING JURISDICTION. FLOOR ELEVATIONS AND ROOM NUMBERS ARE SHOWN NEAR THE HOSE RACKS. THE FIRST DIGIT OF THE HOSE RACK NUMBER CORRESPONDS TO THE FIRST DIGIT OF THE NUMBER OF THE BUILDING IN WHICH IT IS LOCATED. THE SECOND AND THIRD DIGITS INDICATE BUILDING LEVEL AND AREA RESPECTIVELY (SEE REFERENCE 3).
6. VENTS AND DRAINS ARE SHOWN FOR STANDPIPE AND SUPPRESSION SYSTEMS. ADDITIONAL VENTS AND DRAINS ARE TO BE ADDED BASED ON FINAL PIPING LAYOUT.
7. SEE REFERENCE 4 FOR ADDITIONAL SYSTEM DESIGN AND LAYOUT REQUIREMENTS.
8. POSITION SWITCHES ON ELECTRICALLY SUPERVISED VALVES SHALL INITIATE AN ALARM WHEN THE VALVE IS NOT FULLY OPEN.
9. UPPER RING HEADER 54 DIA WITH 24 PY-N TYPE SPRAY NOZZLES.
10. UPPER RING HEADER 108' DIA WITH 44 PY-N TYPE SPRAY NOZZLES.

REFERENCES:

1. PIPING AND INSTRUMENTATION DIAGRAM LEGEND, APP-GW-M6-001.
2. AP1000 COMPONENT NUMBERING PROCEDURE, APP-GW-GMP-006.
3. AP1000 DOCUMENT NUMBERING PROCEDURE, APP-GW-GMP-005.
4. FPS SYSTEM SPECIFICATION DOCUMENT, APP-FPS-M3-001.

DEFINITION:

FPP - FIRE PROTECTION SYSTEM PANEL AS APPLICABLE BY BUILDING SEE APP-FPS-M6-007.

Figure 9.5.1-1 (Sheet 3 of 3)

Fire Protection System
Piping and Instrumentation Diagram
(REF FPS 004)

Figure represents system functional arrangement. Details internal to the system may differ as a result of implementation factors such as vendor-specific component requirements.

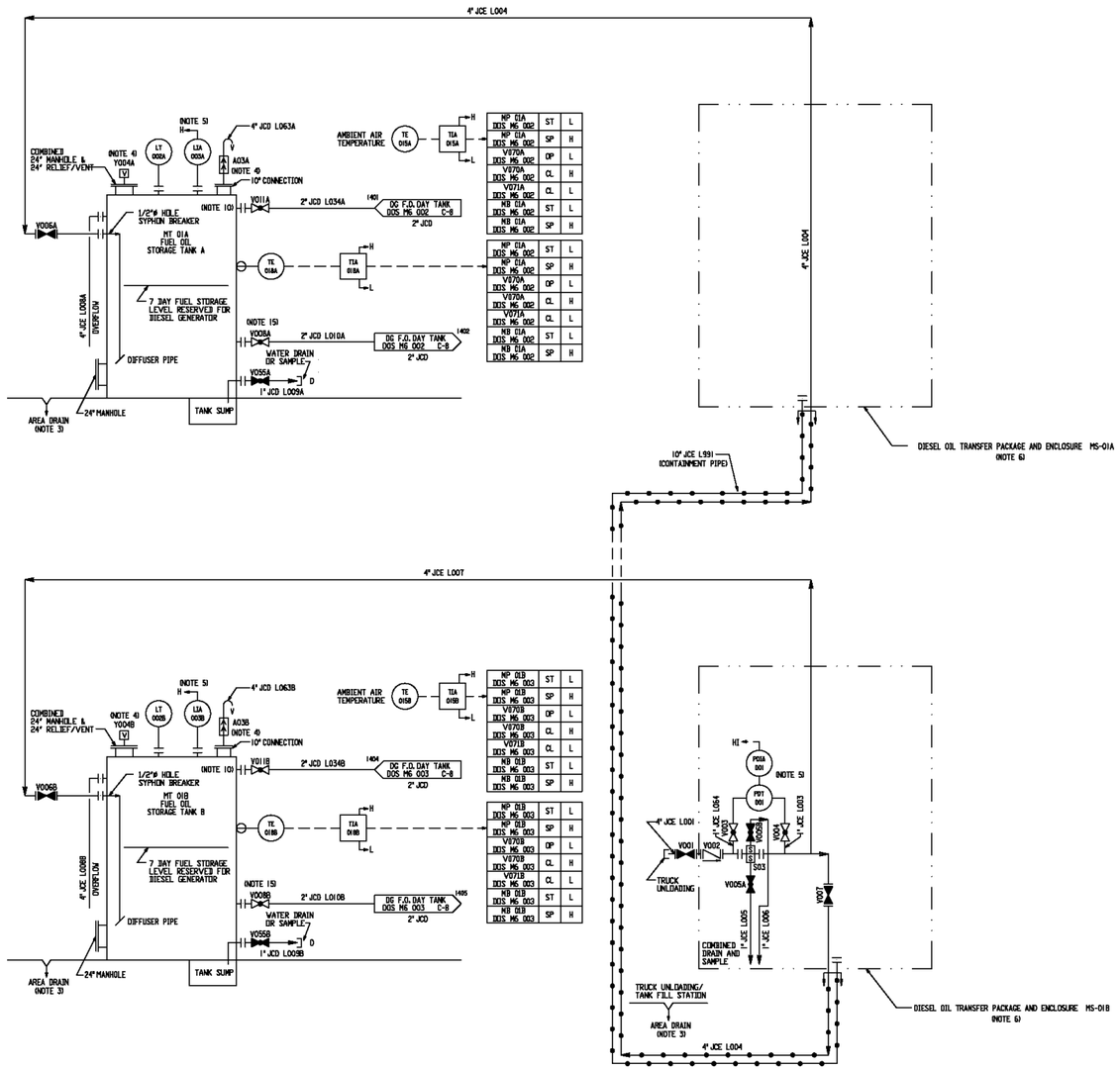

NOTES

1. THE SYSTEM LOCATER CODE "APP-DOS" HAS BEEN OMITTED FROM ALL COMPONENT NUMBERS. EXCEPT FOR EQUIPMENT, THE COMPONENT TYPE CODE HAS ALSO BEEN OMITTED.
2. YARD BURIED PIPE CONTAINING FUEL OIL SHALL HAVE A CONTAINMENT PIPE PER EPA REQUIREMENTS, DESIGNED FOR THE HEAVIEST WHEEL LOAD RESULTING FROM THE STEAM GENERATOR REMOVAL/REPLACEMENT. MULTIPLE FUEL OIL PIPELINES ARE PERMITTED WITHIN ANY CONTAINMENT PIPE WHERE ROUTING PERMITS. CONTAINMENT PIPING SHALL BE CATHODIC PROTECTED, COATED AND WRAPPED STEEL OR A PROPRIETARY VENDOR DESIGNED PLASTIC SYSTEM ROUTED AS SHOWN FOR THE STEEL CONTAINMENT.
3. SEE P&ID DWG NO. APP WWS M6 001 FOR RUNNOFF DRAIN OR FLOOR DRAIN TO WWS SYSTEM.
4. FLAME ARRESTOR/ATMOSPHERIC VENT AND EMERGENCY PRESSURE RELIEF COVER VENT MANHOLE ARRANGEMENT TO MEET NFPA 30 CODE.
5. LOCAL AUDIBLE ALARM AT TRUCK FILL STATION.
6. DIESEL OIL TRANSFER PACKAGE AND ENCLOSURE PROVIDED WITH ELECTRIC HEATER TO MAINTAIN MINIMUM 50°F TEMPERATURE DURING DESIGN WINTER CONDITIONS.
7. FLAME ARRESTOR 10 FEET ABOVE FUEL OIL STORAGE TANK MAXIMUM LEVEL.
8. ELECTRIC 3KW EXTERIOR PAD HEATER AND INSULATION ON TANK BOTTOM ONLY. ELECTRIC HEATING SYSTEM OPERATES ONLY WHEN AMBIENT IS 20°F OR LESS.
9. FOR DIESEL ENGINE FUEL OIL SUPPLY AND RETURN SEE DWG APP ZGS M6 001 AND APP ZGS M6 002 RESPECTIVELY.
10. LOCATE CONNECTION ABOVE MAXIMUM LIQUID STORAGE LEVEL.
11. ALL NONUNDERGROUND PIPING, VALVES, SPECIALITIES, INSTRUMENTS AND EQUIPMENT (EXCLUDING OPEN ENDED ATMOSPHERIC VENT OR DRAIN PIPE) TO BE INSULATED FOR HEAT RETENTION AND/OR FREEZE PROTECTION.
12. BACKUP TO LT 016A.
13. LOW TANK LEVEL OVERRIDES LOW TEMPERATURE.
14. REMAINS CLOSED IN RECIRCULATION MODE UNLESS DAY TANK LEVEL IS LOW.
15. PIPE CONNECTION AT TANK 6" ABOVE TANK BOTTOM.
16. DELETED
17. FOR DIESEL ENGINE FUEL OIL SUPPLY AND RETURN LINES SEE DWG APP ECS M6 001. SUPPLY AND RETURN LINES ARE INSULATED.
18. TWO 1.25 KW EXTERIOR ELECTRIC PAD HEATERS AND TANK INSULATION ARE PROVIDED ON TANK. ELECTRIC HEATING SYSTEM OPERATES ONLY WHEN AMBIENT IS 20°F OR LESS.
19. TANK LEVEL MEASURED BY MEANS OF DIP STICK.
20. COUPLING ADAPTERS PROVIDED WITH DIESEL ENGINES FOR CONNECTION TO FIELD PIPING.

REFERENCES

A. AP1000 COMPONENT NUMBERING PROCEDURE APP GW GMP 006

B. PIPING AND INSTRUMENTATION DIAGRAM LEGEND DRAWING APP GW M6 001, 002 AND 003.

Figure 9.5.4-1 (Sheet 1 of 3)

Figure represents system functional arrangement. Details internal to the system may differ as a result of implementation factors such as vendor-specific component requirements.

Standby Diesel Fuel Oil System
Piping and Instrumentation Diagram
(REF) DOS 001

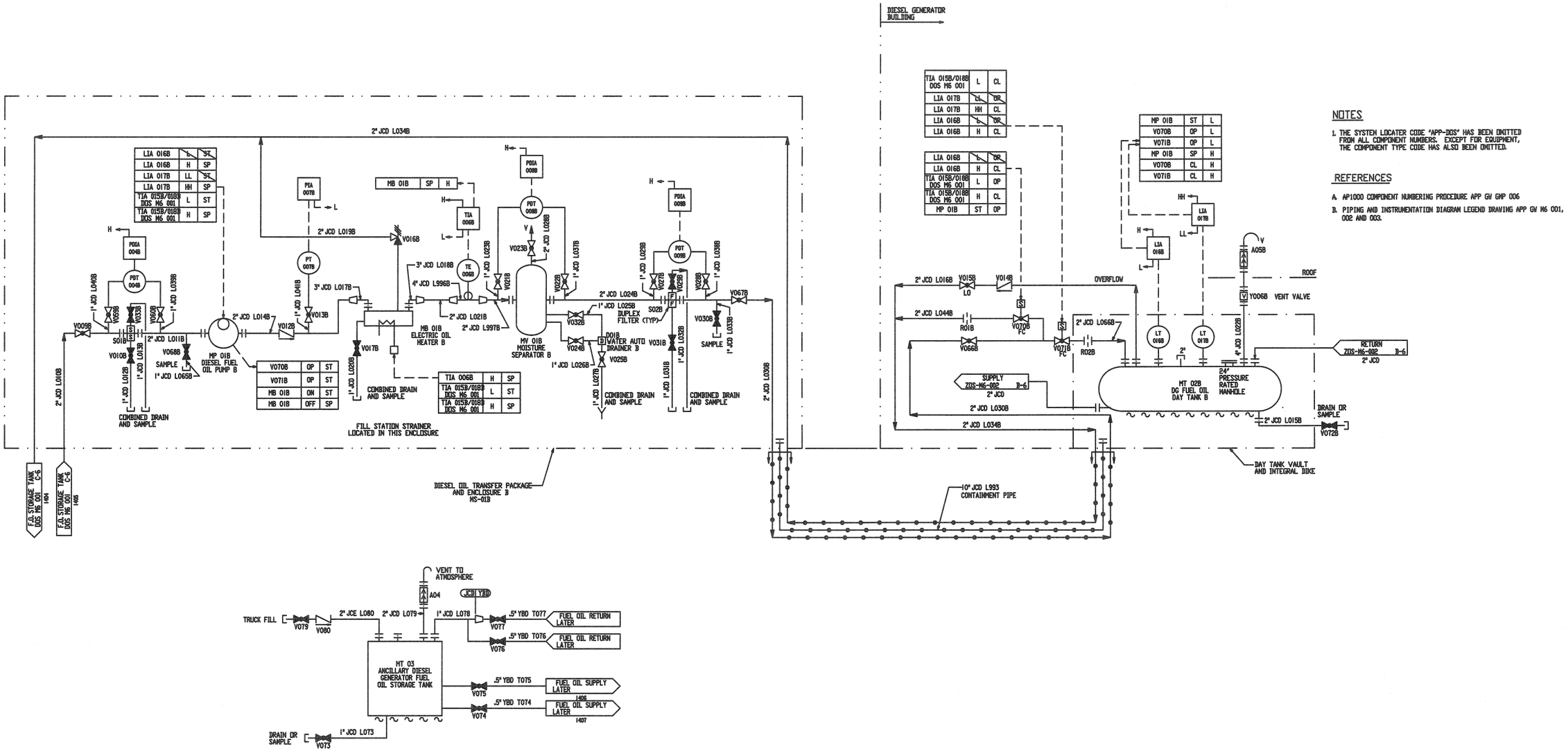

Figure 9.5.4-1 (Sheet 2 of 3)

Standby Diesel Fuel Oil System
Piping and Instrumentation Diagram
(REF) DOS-002

Figure represents system functional arrangement. Details internal to the system may differ as a result of implementation factors such as vendor-specific component requirements.

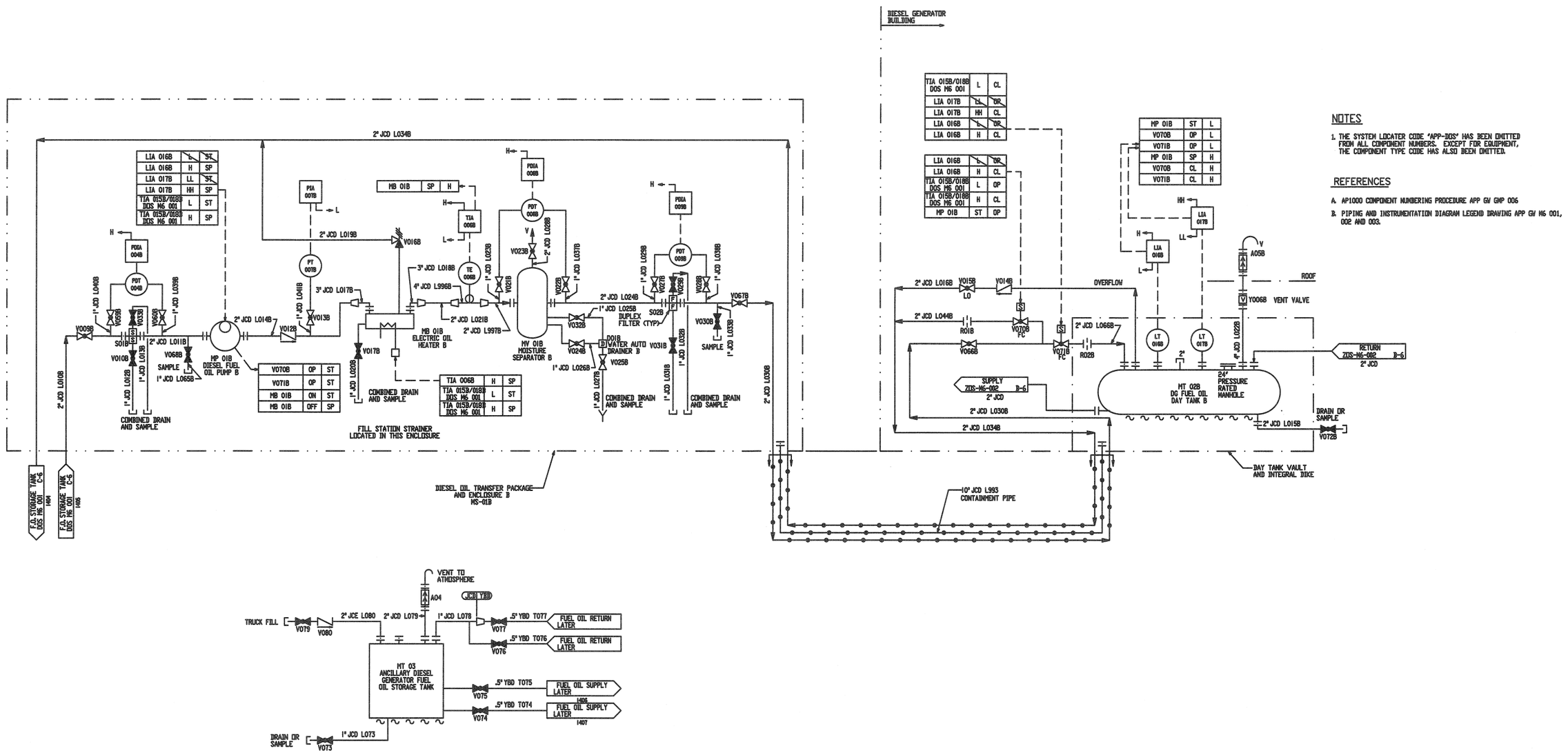

Figure 9.5.4-1 (Sheet 3 of 3)

Standby Diesel Fuel Oil System
Piping and Instrumentation Diagram
(REF) DOS-003

Figure represents system functional arrangement. Details internal to the system may differ as a result of implementation factors such as vendor-specific component requirements.