CHAPTER 9

AUXILIARY SYSTEMS

9.1 Fuel Storage and Handling

9.1.1 New Fuel Storage

9.1.1.1 Design Bases

New fuel is stored in a high density rack which includes integral neutron absorbing material to maintain the required degree of subcriticality. The rack is designed to store fuel of the maximum design basis enrichment. The rack in the new fuel pit consists of an array of cells interconnected to each other at several elevations and to a thick base plate at the bottom elevation. This rack module is not anchored to the pit floor.

The new fuel rack includes storage locations for 72 fuel assemblies. The rack layout and array center-to-center spacing is shown in Figure 9.1-1. This spacing provides a minimum separation between adjacent fuel assemblies which is sufficient to maintain a subcritical array even in the event the building is flooded with unborated water or fire extinguishant aerosols or during any design basis event. The design of the rack is such that a fuel assembly cannot be inserted into a location other than a location designed to receive an assembly. An assembly cannot be inserted into a full location. Surfaces that come into contact with the fuel assemblies are made of annealed austenitic stainless steel.

The requirements of ANS 57.1 are addressed in subsection 9.1.4. The rack is designed to withstand nominal operating loads and safe shutdown earthquake seismic loads defined in Table 9.1-1. The new fuel storage rack is designed to meet seismic Category I requirements of Regulatory Guide 1.29. Refer to subsection 1.9.1 for compliance with Regulatory Guides. The rack is also designed to withstand the maximum uplift force of the fuel handling machine.

AP1000 equipment, seismic and ASME Code classifications are discussed in Section 3.2. The requirements of ASME Code Section III, Division I, Article NF3000 are used as the criteria for evaluation of stress analysis. The materials are procured in accordance with ASME Code Section III, Division I, Article NF2000. Criticality analyses are performed in accordance with the requirements of ANSI N16.1-75, Nuclear Criticality Safety in Operations with Fissionable Materials Outside Reactors (Reference 1); and analysis codes are validated against the requirements of ANSI N16.9-75, Validation of Calculational Methods for Nuclear Criticality Safety (Reference 2).

The stress analysis of the new fuel rack satisfies all of the applicable provisions in NRC Regulatory Guide 1.124, Revision 1 for components design by the linear elastic method (Reference 22).

9.1.1.2 Facilities Description

The new fuel storage facility is located within the seismic Category I auxiliary building fuel handling area. The facility is protected from the effects of natural phenomena such as earthquakes,

wind, tornados, floods, and external missiles by the external walls of the auxiliary building. See Section 3.5 for additional discussion on protection from missiles. The facility is designed to maintain its structural integrity following a safe shutdown earthquake and to perform its intended function following a postulated event such as fire, internal missiles, or pipe break. The walls surrounding the fuel handling area and new fuel storage pit protect the fuel from missiles generated inside the auxiliary building. The fuel handling area does not contain a credible source of missiles. Refer to subsection 1.2.4.3 for a discussion of the auxiliary building. Refer to Section 3.8 for a discussion of the structural design of the new fuel storage area. Refer to subsection 3.5.1 for a discussion of missile sources and protection.

The dry, unlined, approximately 17-feet deep reinforced concrete pit is designed to provide support for the new fuel storage rack. The rack is supported by the pit floor. The walls of the new fuel pit are seismic Category I. The new fuel pit is normally covered to prevent foreign objects from entering the new fuel storage rack. Since the only crane that can access the new fuel pit does not have the capacity to lift heavy objects, as defined in subsection 9.1.5, the new fuel pit cover is not designed to protect the fuel assemblies from the effects of dropped heavy objects. Figures 1.2-7 through 1.2-10 show the relationship between the new fuel storage facility and other features of the fuel handling area.

The new fuel storage pit is drained by gravity drains that are part of the radioactive waste drain system (subsection 9.3.5), draining to the waste holdup tanks which are part of the liquid radwaste system (Section 11.2). These drains preclude flooding of the pit by an accidental release of water.

Nonseismic equipment in the vicinity of the new fuel storage rack is evaluated to confirm that its failure could not result in an increase of K_{eff} beyond the maximum allowable K_{eff}. Refer to subsection 3.7.3.13 for a discussion of the nonseismic equipment evaluation.

The fuel handling machine is used to handle new fuel assemblies in the rail car bay, new fuel rack, and new fuel elevator. The capacity of the fuel handling machine, while over the new fuel storage rack, is limited to lifting a fuel assembly, control rod assembly, and handling tool. The new fuel storage rack is not accessed by the cask handling crane. This precludes the movement of loads greater than fuel components over stored new fuel assemblies.

During fuel handling operations, a ventilation system removes gaseous radioactivity from the atmosphere above the new fuel pit. Refer to subsection 9.4.3 for a discussion of the fuel handling area HVAC system and Section 11.5 for process radiation monitoring. Security for the new fuel assemblies is described in separate security documents referred to in Section 13.6.

9.1.1.2.1 New Fuel Rack Design

A. Design and Analysis of the New Fuel Rack

The new fuel storage rack array center-to-center spacing of nominally 10.9 inches provides a minimum separation between adjacent fuel assemblies sufficient with neutron absorbing material to maintain a subcritical array. The seismic and stress analyses of the new fuel rack consider the condition of full fuel assembly loadings. The rack is evaluated for the safe shutdown earthquake condition against the seismic Category I requirements. A stress analysis

is performed to verify the acceptability of the critical load components and paths under normal and faulted conditions. The rack rests on the pit floor.

The dynamic response of the fuel rack assembly during a seismic event is the condition which produces the governing loads and stresses on the structure. The new fuel storage rack is designed to meet the seismic Category I requirements of Regulatory Guide 1.29.

Loads and Load Combinations

The applied loads to the new fuel rack are:

- Dead loads
- Live loads - effect of lifting the empty rack during installation
- Seismic forces of the safe shutdown earthquake
- Fuel assembly drop accident
- Fuel handling machine uplift while over the new fuel rack - postulated stuck fuel assembly

Table 9.1-1 shows loads and load combinations considered in the analyses of the new fuel rack.

The margins of safety for the rack in the multi-direction seismic event are produced using loads obtained from the seismic analysis based on the simultaneous application of three statistically independent, orthogonal accelerations.

B. Fuel Handling Machine Uplift Analysis

An analysis is performed to demonstrate that the rack can withstand a maximum uplift load of 4000 pounds. This load is applied to a postulated stuck fuel assembly. Resultant rack stresses are evaluated against the stress limits and are demonstrated to be acceptable. It is demonstrated that there is no change in rack geometry of a magnitude which causes the criticality criteria to be violated.

C. Fuel Assembly Drop Accident Analysis

In the unlikely event of dropping a fuel assembly, accidental deformation of the rack is determined and evaluated in the criticality analysis to demonstrate that it does not cause the criticality criterion to be violated. The analysis considers only the case of a dropped new fuel assembly.

For the analysis of a dropped fuel assembly, two accident conditions are postulated. The first accident condition conservatively assumes that the weight of a fuel assembly, control rod assembly, and handling tool (2027 pounds total) impacts the top of the fuel rack from a drop height of 3 feet above the top of the rack. Both a straight drop and an inclined drop are included in the assessment. Calculations are performed to demonstrate that the impact energy is absorbed by the dropped fuel assembly, the rack cells, and the rack base plate assembly.

The second accident condition assumes that the dropped assembly, control rod assembly, and handling tool (2027 pounds) falls straight through an empty cell and impacts the rack base plate from a drop height of 3 feet above the top of the rack. An analysis is performed that demonstrates the impact energy is absorbed by the fuel assembly and the rack base plate. The resulting rack deformations are evaluated in the criticality analysis to demonstrate that the criticality criteria are not violated.

D. Failure of the Fuel Handling Machine

The fuel handling machine is a seismic Category II component. The fuel handling machine is evaluated to show that the machine does not fall into the new fuel pit during a seismic event.

E. Internally Generated Missiles

The fuel handling area does not contain any credible sources of internally generated missiles.

Stress analyses are performed by the vendor using loads developed by the dynamic analysis. Stresses are calculated at critical sections of the rack and compared to acceptance criteria referenced in ASME Section III, Division I, Article NF3000.

9.1.1.3 Safety Evaluation

The rack, being a seismic Category I structure, is designed to withstand normal and postulated dead loads, live loads, loads resulting from thermal effects, and loads caused by the safe shutdown earthquake event.

The design of the rack is such that K_{eff} remains less than or equal to 0.95 with new fuel of the maximum design basis enrichment. For a postulated accident condition of flooding of the new fuel storage area with unborated water, K_{eff} does not exceed 0.98.

The criticality evaluation considers the inherent neutron absorbing effect of the materials of construction, including fixed neutron absorbing "poison" material.

The new fuel rack is located in the new fuel storage pit, which has a cover to protect the new fuel from debris. No loads are required to be carried over the new fuel storage pit while the cover is in place. The cover is designed such that it will not fall and damage the fuel or fuel rack during a seismic event. Administrative controls are utilized when the cover is removed for new fuel transfer operations to limit the potential for dropped object damage.

The rack is also designed with adequate energy absorption capabilities to withstand the impact of a dropped fuel assembly from the maximum lift height of the fuel handling machine. Handling equipment (cask handling crane) capable of carrying loads heavier than fuel components is prevented from traveling over the fuel storage area. The fuel storage rack can withstand an uplift force of 4000 pounds.

Materials used in rack construction are compatible with the storage pit environment, and surfaces that come into contact with the fuel assemblies are made of annealed austenitic stainless steel. Structural materials are corrosion resistant and will not contaminate the fuel assemblies or storage

pit environment. Neutron absorbing "poison" material used in the rack design has been qualified for the storage environment. Venting of the neutron absorbing material is considered in the detailed design of the storage rack.

The new fuel assemblies are stored dry. The rack structure is designed to maintain a safe geometric array for normal and postulated accident conditions. The fixed neutron absorbing "poison" material maintains the required degree of subcriticality for normal and postulated accident conditions such as flooding with pure water and low density optimum moderator "misting."

A discussion of the methodology used in the criticality analysis is provided in subsection 4.3.2.6.

9.1.2 Spent Fuel Storage

9.1.2.1 Design Bases

Spent fuel is stored in high density racks which include integral neutron absorbing material to maintain the required degree of subcriticality. The racks are designed to store fuel of the maximum design basis enrichment. Each rack in the spent fuel pool consists of an array of cells interconnected to each other at several elevations and to a thick base plate at the bottom elevation. These rack modules are free-standing, neither anchored to the pool floor nor braced to the pool wall. The spent fuel storage racks include storage locations for 884 fuel assemblies and five defective fuel assemblies. The Region 1 spent fuel rack layout is shown in Figure 9.1-2. The Region 2 spent fuel rack layout is shown in Figure 9.1-3. The overall spent fuel pool rack layout is presented in Figure 9.1-4. All spent fuel racks will be in place whenever fuel is stored in the spent fuel racks. See DCD subsection 3.7.5.2, for discussion of site-specific procedures for activities following an earthquake. An activity will be to address measurement of the post-seismic event gaps between spent fuel racks and to take appropriate corrective actions.

The design of the racks is such that a fuel assembly cannot be inserted into a location other than a location designed to receive an assembly. An assembly cannot be inserted into a full location.

AP1000 equipment, seismic and ASME Code classifications are discussed in Section 3.2. The requirements of ASME Section III, Division I, Article NF3000 are used as the criteria for evaluation of stress analyses. The materials are procured in accordance with ASME Section III, Division I, Article NF2000. Criticality analyses are performed in accordance with the requirements of ANSI N16.1-75, Nuclear Criticality Safety in Operations with Fissionable Materials Outside Reactors (Reference 1); analysis codes are validated against the requirements of ANSI N16.9-75, Validation of Calculational Methods for Nuclear Criticality Safety (Reference 2); and overall requirements for fuel storage are in accordance with ANSI N210-76, Design Objectives for Light Water Reactor Spent Fuel Storage Facilities at Nuclear Power Stations (Reference 3).

The stress analysis of the spent fuel racks satisfies all of the applicable provisions in NRC Regulatory Guide 1.124, Revision 1 for components designed by the linear elastic analysis method (Reference 22).

The spent fuel pool is designed to preclude inadvertent draining of the water from the pool.

9.1.2.2 Facilities Description

The spent fuel storage facility is designed to the guidelines of ANS 57.2 (Reference 4). The spent fuel storage facility is located within the seismic Category I auxiliary building fuel handling area. The walls of the spent fuel pool are an integral part of the seismic Category I auxiliary building structure. The facility is protected from the effects of natural phenomena such as earthquakes (subsection 3.7.2), wind and tornados (Section 3.3), floods (Section 3.4), and external missiles (Section 3.5).

The facility is designed to maintain its structural integrity following a safe shutdown earthquake and to perform its intended function following a postulated event such as a fire. Refer to subsection 1.2.4.3 for further discussions of the auxiliary building fuel handling area.

Nonseismic equipment in the vicinity of the spent fuel storage racks is evaluated to confirm that its failure could not result in an increase of K_{eff} beyond the maximum allowable K_{eff}. Refer to subsection 3.7.3.13 for a discussion of the nonseismic equipment evaluation.

The spent fuel pool provides storage space for spent fuel. The pool is approximately 42.5 feet deep and constructed of reinforced concrete and concrete filled structural modules as described in subsection 3.8.4. The portion of the structural modules in contact with the water in the pool is stainless steel and the reinforced concrete portions are lined with a stainless steel plate. The minimum water volume of the pool is about 190,500 gallons of borated water (including racks without fuel at a water level 15 inches below the operating deck) with a nominal boron concentration of 2700 ppm. Figures 1.2-7 through 1.2-10 show the spent fuel pool and other features of the fuel handling area.

The connections for the drain and makeup lines are located to preclude the draining of the spent fuel pool due to a break in a line or failure of a pump to stop. The connection for the spent fuel cooling pumps' suction is located below normal water level and above the level needed to provide sufficient water for shielding and for cooling of the fuel if the spent fuel pool cooling system is unavailable. Skimmers that normally follow the water level surface do not travel below the level of the spent fuel cooling suction. Connections for suction to the chemical volume and control system are located between the normal water level and the spent fuel cooling system pumps' suction connection level. Pipes which discharge into the spent fuel pool include a siphon break between the normal water level and the level of the spent fuel cooling system pumps' suction connection.

The piping which returns the water to the spent fuel pool from the spent fuel pool cooling system enters the pool at the opposite end from the spent fuel pool cooling system pumps' suction connection. The piping arrangement and location ensure thorough mixing of the cooled water into the pool to prevent stagnant or hot regions.

A gated opening connects the spent fuel pool and fuel transfer canal. The fuel transfer canal is connected to the in-containment refueling cavity by a fuel transfer tube. The spent fuel transfer operation is completed underwater, and the waterways are of sufficient depth to maintain a minimum of 8.75 feet of shielding water above the active fuel height of spent fuel assemblies. A metal gate with gasket assembly separates the spent fuel pool and fuel transfer canal. This allows

the fuel transfer canal to be drained without reducing the water level in the spent fuel pool. During normal operation, this gate remains open and is only closed to drain the canal. The bottom of the fuel transfer canal has a drain connected to safety-related piping and isolation valves which prevents inadvertent draining after a seismic event. Subsection 9.1.3 further addresses the minimum water level in the spent fuel pool.

Next to the spent fuel pool and accessible by another gated, gasketed opening is a cask loading pit. The cask pit is a lined reinforced concrete structure of the auxiliary building fuel handling area. It is provided for underwater loading of fuel into a shipping cask and cask draining/decontamination prior to cask transshipment from the AP1000 site. The bottom of the cask loading pit has a drain connected to safety-related piping and isolation valve which prevents inadvertent draining after a seismic event. The gate between the spent fuel pool and the cask loading pit is normally closed and opened only for cask loading options. The cask loading pit can be used as a source of water for low pressure injection to the reactor coolant system via the normal residual heat removal pumps during an event in which the reactor coolant system pressure and inventory decrease.

The fuel handling machine traverses the spent fuel pool, the fuel transfer canal, the cask loading pit, the new fuel storage pit, and the rail car bay. It is used in the movement of both new and spent fuel assemblies. The fuel handling machine is used to transfer new fuel assemblies from the new fuel storage rack into the spent fuel pool. A new fuel elevator in the spent fuel pool lowers the new fuel to an elevation accessible by the fuel handling machine.

The cask handling crane is used for operations involving the spent fuel shipping cask. The cask handling crane traverses the auxiliary building and a portion of the fuel handling area. The cask handling crane's path is designed such that the cask cannot pass over the spent fuel pool, new fuel pit, or fuel transfer canal. This precludes the movement of loads greater than fuel components over stored fuel in accordance with Regulatory Guide 1.13.

During fuel handling operations, a ventilation system removes gaseous radioactivity from the atmosphere above the spent fuel pool. Refer to subsection 9.4.3 for a discussion of the radiologically controlled area ventilation system, Section 11.5 for process radiation monitoring, subsection 9.1.3 for the spent fuel pool cooling system, and subsection 12.2.2 for airborne activity levels in the fuel handling area.

9.1.2.2.1 Spent Fuel Rack Design

A. Design and Analysis of Spent Fuel Racks

The spent fuel pool rack layout contains both Region 1 rack modules with a center-to-center spacing of nominally 10.9 inches and Region 2 rack modules with a center-to-center spacing of nominally 9.03 inches. Both of these rack module configurations provide adequate separation between adjacent fuel assemblies with neutron absorbing material to maintain a subcritical array.

The material used in the AP1000 fuel storage racks is Metamic®, a metal matrix composite material consisting of a Type 6061 aluminum alloy matrix reinforced with boron carbide (B_4C). The Metamic is in the form of sheets having a nominal thickness of 0.106 inches and a minimum ^{10}B areal density of 0.0304 gm/cm^2 (minimum 30.5 wt% B_4C). The panels are

not anodized, but will be cleaned via glass bead blasting and washing with demineralized water to ensure removal of surface contamination prior to installation.

No credit is taken for Metamic in the rack structural analysis, and the Metamic panels are completely encased in (and supported by) stainless steel panels (which are vented) so the mechanical properties of the Metamic do not affect the performance of the panels. Nevertheless, mechanical properties (obtained from Reference 24) are summarized below:

Property	Value
Density	2.646 gm/cm^3
Yield Strength	33,000 psi
Ultimate Strength	40,000 psi
Elongation	1.8%

With the exception of density, which is given at 30 wt% B_4C, the properties in this table are all specified for 31 wt% B_4C. Metamic has been evaluated by the NRC for use in spent fuel pool applications (Reference 25).

The Metamic panels are suitable for long-term use in the spent fuel pool environment. The Metamic panels are potentially affected by the pool's temperature, aqueous environment, and radiation field. The effects of each of these parameters are discussed separately in the following paragraphs.

The pool's temperature will exceed the ambient temperature as a result of the stored fuel heat, but will be maintained at or below 120°F. Elevated temperature testing of 31 wt% B_4C Metamic was performed at 750°F in air for nearly a year (Reference 24), with no reduction in thickness, no change in weight, no reduction on ^{10}B content, and no change in density. The complete lack of dimensional or chemical changes in these elevated rate tests is sufficient to show that temperatures up to 120°F, even for 60 years or more, will not detrimentally affect the condition of the Metamic panels.

The aqueous environment of the pool with a nominal dissolved Boron concentration of 2,700 ppm will be slightly acidic. Elevation temperature (200°F) corrosion rate testing of 32 wt% B_4C Metamic (Reference 24) for 90 days indicated that "no corrosion was observed" and there was "no significant change in ^{10}B areal density." The complete lack of any chemical changes in the tests, combined with the knowledge of the effects of temperature and pH on corrosion rate, is sufficient to show that the aqueous spent fuel pool environment, even for 60 years, will not detrimentally affect the condition of the Metamic panels.

Samples of 31 wt% B_4C Metamic were subjected to a radiation field with both gamma (1.5×10^{11} rads) and fast neutron (1.7×10^{18} nvt to 5.8×10^{19} nvt) components. Conclusions of post-irradiation testing were: Metamic exhibits excellent dimensional stability after irradiation and there was no change in Boron-10 areal density (Reference 24). The complete lack of dimensional or chemical changes as a result of these high radiation exposures is sufficient to show that the expected radiation field in the pool, even for 60 years, will not

detrimentally affect the condition of the Metamic panels. A coupon tree with 14 coupons is provided with the spent fuel racks. Coupons are nominally 6 inches wide by 8 inches long by 0.106 inches thick. Each coupon is representative of the panel from which it is cut, including the presence of any scratches or other surface irregularities. The initial B_4C content of Metamic is determined from the amounts of B_4C and aluminum powder mixed together in the manufacturing process. If for example, 1000 pounds of aluminum and 250 pounds of B_4C are used to manufacture one lot of material, it would be 20 percent B_4C. This approach has been validated by Metamic LLC, the supplier of the Metamic poison material, and Holtec International, the rack designer.

The recommended Metamic monitoring schedule is as follows:

- End of Cycle 1 – Remove First Coupon
- End of Cycle 2 – Remove Second Coupon
- End of Cycle 3 – Remove Third Coupon
- End of Cycle 5 – Remove Fourth Coupon
- End of Cycle 10 – Remove Fifth Coupon
- End of Cycle 20 – Remove Sixth Coupon
- End of Cycle 30 – Remove Seventh Coupon
- End of Cycle 40 – Remove Eighth Coupon

If the plant is operated on an 18-month cycle, eight coupons provide 60 years of Metamic surveillance. There are six additional coupons provided.

This coupon tree will be used to monitor the condition of the Metamic over the 60-year life of the spent fuel racks.

The seismic and stress analyses of the spent fuel racks consider the various conditions of full, partially filled, and empty fuel assembly loadings. The racks are evaluated for the safe shutdown earthquake condition and seismic Category I requirements. A detailed stress analysis is performed to verify the acceptability of the critical load components and paths under normal and faulted conditions. The racks rest on the pool floor and are evaluated to determine that under loading conditions they do not impact each other nor do they impact the pool walls.

The dynamic response of the fuel rack assembly during a seismic event is the condition which produces the governing loads and stresses on the structure.

Loads and Load Combinations

The applied loads to the spent fuel racks are:

- Dead loads
- Live loads - effect of lifting the empty rack during installation
- Seismic forces of the safe shutdown earthquake
- Fuel assembly drop analysis

- Fuel handling machine uplift - postulated stuck fuel assembly
- Thermal loads

Table 9.1-1 shows loads and load combinations that are considered in the analyses of the spent fuel racks including those given in Reference 5.

The margins of safety for the racks in the multi-direction seismic event are produced using loads obtained from the seismic analysis based on the simultaneous application of three statistically independent, orthogonal accelerations.

B. Fuel Handling Machine Uplift Analysis

An analysis is performed to demonstrate that the racks can withstand a maximum uplift load of 5000 pounds. This load is applied to a postulated stuck fuel assembly. Resultant rack stresses are evaluated against the stress limits and are demonstrated to be acceptable. It is also demonstrated that there is no change in rack geometry of a magnitude which causes the criticality criteria to be violated.

C. Fuel Assembly Drop Accident Analysis

In the unlikely event of dropping a fuel assembly, accidental deformation of the rack is determined and evaluated in the criticality analysis to demonstrate that it does not cause the criticality criterion to be violated. The analysis considers only the case of a dropped spent, irradiated fuel assembly in a flooded pool and takes credit for dissolved boron in the water.

For the analysis of a dropped fuel assembly, two accident conditions are postulated. The first accident condition conservatively assumes that the weight of a fuel assembly, control rod assembly, and handling tool (3100 pounds total) impacts the top of the fuel rack from a drop height of 3 feet above the top of the rack. Both a straight drop and an inclined drop are included in the assessment. Calculations are performed to demonstrate that the impact energy is absorbed by the dropped fuel assembly, the rack cells, and the rack base plate assembly. Under these faulted conditions, credit is taken for dissolved boron in the pool water.

The second accident condition assumes that the dropped fuel assembly, control rod assembly, and handling tool (3100 pounds) fall straight through an empty cell and impact the rack base plate from a drop height of 3 feet above the top of the rack. The analysis is performed and demonstrates that the impact energy is absorbed by the fuel assembly and the rack base plate. At an interior rack location, base plate deformation is limited so that the pool liner is not impacted. At a support pad location, the stresses developed in the pool liner are evaluated to be within allowable limits such that the liner integrity is maintained. Under these faulted conditions, credit is taken for dissolved boron in the pool water.

D. Fuel Rack Sliding and Overturning Analysis

Consistent with the criteria of Reference 5, the racks are evaluated for overturning and sliding displacement due to earthquake conditions under the various conditions of full, partially filled, and empty fuel assembly loadings.

E. Failure of the Fuel Handling Machine

The fuel handling machine is a seismic Category II component. The fuel handling machine is evaluated to show that it does not collapse into the spent fuel pool as a result of a seismic event.

F. Internally Generated Missiles

The spent fuel handling area does not contain any credible sources of internally generated missiles.

Stress analyses are performed by the vendor using loads developed by the dynamic analysis. Stresses are calculated at critical sections of the rack and compared to acceptance criteria referenced in ASME Section III, Division I, Article NF3000.

9.1.2.3 Safety Evaluation

The design and safety evaluation of the spent fuel racks is in accordance with Reference 5. The racks, being Equipment Class D and seismic Category I structures, are designed to withstand normal and postulated dead loads, live loads, loads resulting from thermal effects, and loads caused by the safe shutdown earthquake event.

The design of the racks is such that K_{eff} remains less than or equal to 0.95 under design basis conditions, including fuel handling accidents. Inadvertent insertion of a fuel assembly between the rack periphery and the pool wall or placement of a fuel assembly across the top of a fuel rack is considered a postulated accident, and as such, realistic initial conditions such as boron in the pool water are assumed. These accident conditions have an acceptable K_{eff} of less than 0.95. The criticality evaluation, which meets the requirements of 10 CFR 50.68, Paragraph b (Reference 21), considers the inherent neutron absorbing effect of the materials of construction, including fixed neutron absorbing "poison" material. Soluble boron in the spent fuel pool, plutonium decay time, integral fuel burnable absorber, and assembly burnup are used as reactivity credits.

The racks are also designed with adequate energy absorption capabilities to withstand the impact of a dropped fuel assembly from the maximum lift height of the fuel handling machine. Handling equipment (cask handling crane) capable of carrying loads heavier than fuel components is prevented by design from carrying loads over the fuel storage area. The fuel storage racks can withstand an uplift force greater than or equal to the uplift capability of the fuel handling machine (5000 pounds).

Materials used in rack construction are compatible with the storage pool environment, and surfaces that come into contact with the fuel assemblies are made of annealed austenitic stainless steel. Structural materials are corrosion resistant and will not contaminate the fuel assemblies or pool environment. Neutron absorbing "poison" material used in the rack design has been qualified for the storage environment. Venting of the neutron absorbing material is considered in the detailed design of the storage racks.

Design of the spent fuel storage facility is in accordance with Regulatory Guide 1.13. A discussion of the methodology used in the criticality analysis is provided in subsection 4.3.2.6.

9.1.3 Spent Fuel Pool Cooling System

The spent fuel pool cooling system (SFS) is designed to remove decay heat which is generated by stored fuel assemblies from the water in the spent fuel pool. This is done by pumping the high temperature water from within the fuel pool through a heat exchanger, and then returning the water to the pool. A secondary function of the spent fuel pool cooling system is clarification and purification of the water in the spent fuel pool, the transfer canal, and the refueling water. A listing of the major functions of the spent fuel pool cooling system and the corresponding modes of operation is provided below:

- **Spent fuel pool cooling** - Remove heat from the water in the spent fuel pool during operation to maintain the pool water temperature within acceptable limits.
- **Spent fuel pool purification** - Provide purification and clarification of the spent fuel pool water during operation.
- **Refueling cavity purification** - Provide purification of the refueling cavity during refueling operations.
- **Water transfers** - Transfer water between the in-containment refueling water storage tank (IRWST) and the refueling cavity during refueling operations.
- **In-containment refueling water storage tank purification** - Provide purification and cooling of the in-containment refueling water storage tank during normal operation.

9.1.3.1 Design Basis

9.1.3.1.1 Safety Design Basis

The spent fuel pool cooling system has the safety-related function of containment isolation. See subsection 6.2.3 for the containment isolation system. Safety-related makeup to the spent fuel pool is discussed in subsection 9.1.3.4.3.

9.1.3.1.2 Power Generation Basis

The principal functions of the spent fuel pool cooling system are outlined above. The spent fuel pool cooling system is designed to perform its function in a reliable and failure tolerant manner. This reliability is achieved with the use of rugged and redundant equipment. The spent fuel pool cooling system is not a safety-related system and is not required to operate following events such as earthquake, fire, passive failures or multiple active failures.

9.1.3.1.3 Spent Fuel Pool Cooling

9.1.3.1.3.1 Partial Core

The spent fuel pool cooling system is designed to remove heat from the spent fuel pool such that the spent fuel pool water temperature will be ≤ 120°F following a partial core fuel shuffle refueling. The system is designed to perform this function based on the following:

- The assumed heat load is based on the decay heat generated by the accumulated maximum number of fuel assemblies stored in the fuel pool, which includes 44% of a core (69 assemblies) being placed into the pool beginning at 120 hours after shutdown.

- Both trains of the spent fuel pool cooling system are assumed to be operating.

- The component cooling water system (CCS) supply temperature to the spent fuel pool cooling system heat exchangers is based on a service water system heat sink with a maximum normal ambient design wet bulb temperature as defined in Chapter 2, Table 2-1.

9.1.3.1.3.2 Full Core Off-Load

The AP1000 normal refueling basis heat load is from a full core off-load. The spent fuel pool cooling system is designed to remove heat from the spent fuel pool such that the spent fuel pool water temperature will be ≤ 120°F following a full core off-load based upon a service water heat sink at a maximum normal ambient wet bulb temperature as defined by Chapter 2, Table 2-1. The system is designed to perform this function based on the following:

- The assumed heat load is based on the decay heat generated by the accumulated maximum number of fuel assemblies stored in the fuel pool, plus one full core placed in the pool at 120 hours after shutdown. The time during the plant operating cycle at which the full core off-load occurs is chosen to maximize the required spent fuel pool cooling system heat load.

- The spent fuel pool cooling system is assumed to function with its full set of equipment available. One train of the normal residual heat removal system is also connected to the spent fuel pool and provides cooling as described in subsection 5.4.7.4.5.

- The component cooling water system supply temperature to the spent fuel pool cooling system heat exchangers is based on a service water system heat sink with a maximum normal ambient design wet bulb temperature as defined in Chapter 2, Table 2-1.

9.1.3.1.4 Spent Fuel Pool Purification

The spent fuel pool cooling system removes radioactive corrosion products, fission product ions and dust to maintain low spent fuel pool (SFP) activity levels and to maintain water clarity during all modes of plant operation. The spent fuel pool cooling system purification capability is such that the occupational radiation exposure (ORE) is minimized to support as-low-as-reasonably-achievable (ALARA) goals. The spent fuel pool cooling system clarification capability is sufficient to permit necessary operations that must be conducted in the spent fuel pool area. The spent fuel pool cooling system is designed to perform its purification function in accordance with the following additional criteria:

- The spent fuel pool cooling system is designed to limit exposure rates to personnel on the spent fuel pool fuel handling machine to less than 2.5 millirem per hour. This corresponds to an activity level in the water of approximately 0.005 microcurie per gram for the dominant gamma-emitting isotopes at the time of refueling.

- The spent fuel pool cooling system flow rate for one train shall be more than that necessary to provide two water volume changes in 24 hours for the spent fuel pool water.

9.1.3.1.5 Refueling Cavity Purification

The spent fuel pool cooling system removes radioactive corrosion products, fission product ions and dust to maintain low refueling cavity activity levels and to maintain water clarity during refueling operations. The spent fuel pool cooling system purification capability is such that the occupational radiation exposure is minimized to support ALARA goals. Furthermore, the spent fuel pool cooling system clarification capability is sufficient to permit necessary refueling operations that must be conducted in the refueling cavity. The spent fuel pool cooling system is designed to perform its purification function in accordance with the following additional criterion:

- The spent fuel pool cooling system is designed to limit exposure rates to personnel on the refueling machine to less than 2.5 millirem per hour. This corresponds to an activity level in the water of approximately 0.005 microcurie per gram for the dominant gamma-emitting isotopes at the time of refueling.

9.1.3.1.6 Water Transfers

The spent fuel pool cooling system is designed to transfer water from the in-containment refueling water storage tank to the refueling cavity prior to a refueling and then back to the in-containment refueling water storage tank upon completion of the refueling operations. The spent fuel pool cooling system is designed to perform this function in accordance with the AP1000 refueling schedule.

9.1.3.1.7 In-Containment Refueling Water Storage Tank Purification

The spent fuel pool cooling system removes radioactive corrosion products and fission ions to maintain low in-containment refueling water storage tank activity levels during normal plant operation prior to a scheduled refueling. The spent fuel pool cooling system is designed to maintain the water in the in-containment refueling water storage tank consistent with activity requirements of the water in the refueling cavity during a refueling.

9.1.3.1.8 Spent Fuel Pool Water Tritium Concentration Control

The concentration of tritium in the spent fuel pool water is maintained at less than 0.5 μCi/g to provide confidence that the airborne concentration of tritium in the fuel handling area is within 10 CFR 20, Appendix B limits (see subsection 12.2.2). The tritium concentration in the spent fuel pool is reduced, if necessary, by transferring a portion of the spent fuel pool water to the liquid radwaste system for discharge and replacing it with non-tritiated water.

9.1.3.2 System Description

The spent fuel pool cooling system is a non-safety-related system. The safety-related function of cooling and shielding the fuel in the spent fuel pool is performed by the water in the pool. A simplified sketch of the spent fuel pool cooling system is included as Figure 9.1-5. The piping and instrumentation diagram for the spent fuel pool cooling system is Figure 9.1-6.

The spent fuel pool cooling system consists of two mechanical trains of equipment. Each train includes one spent fuel pool pump, one spent fuel pool heat exchanger, one spent fuel pool demineralizer and one spent fuel pool filter. The two trains of equipment share common suction and discharge headers. In addition, the spent fuel pool cooling system includes the piping, valves, and instrumentation necessary for system operation.

The spent fuel pool cooling system is designed such that either train of equipment can be operated to perform any of the functions required of the spent fuel pool cooling system independently of the other train. One train is continuously cooling and purifying the spent fuel pool while the other train is available for water transfers, in-containment refueling water storage tank purification, or aligned as a backup to the operating train of equipment.

Each train is designed to process spent fuel pool water. Each pump takes suction from the common suction header and discharges directly to its respective heat exchanger. The outlet piping branches into parallel lines. The purification branch is designed to process approximately 20% of the cooling flow while the bypass branch passes the remaining.

Each purification branch is routed directly to a spent fuel pool demineralizer. The outlet of the demineralizer is to a spent fuel pool filter. The outlet of the filter is then connected to the bypass branch which forms a common line that connects to the discharge header.

The spent fuel pool cooling system suction header is connected to the spent fuel pool at two locations. The main suction line connects to the spent fuel pool at an elevation 6 feet below the operating deck. Two skimmer connections take suction from the water surface of the spent fuel pool. This suction arrangement prevents the spent fuel pool from inadvertently being drained below a level that would prevent the water in the spent fuel pool from performing its safety-related function. This arrangement also eliminates the need for a separate skimmer circuit arrangement.

The spent fuel pool pump suction header is connected to the in-containment refueling water storage tank and the refueling cavity. This enables purification of the in-containment refueling water storage tank or the refueling cavity and allows for the transfer of water between the in-containment refueling water storage tank and the refueling cavity.

The spent fuel pool pump suction header is also connected to the fuel transfer canal and the cask loading pit. These connections are provided primarily for the transfer of water from the fuel transfer canal to the cask loading pit. Water that is normally stored in the fuel transfer canal can be sent to the cask loading pit and vice versa.

The spent fuel pool is initially filled for use with water having a nominal boron concentration of 2700 ppm. Demineralized water can be added for makeup purposes, including replacement of evaporative losses, from the demineralized water transfer and storage system. Boron may be added to the spent fuel pool from the chemical and volume control system.

The spent fuel pool water may be separated from the water in the transfer canal by a gate. The gate enables the transfer canal to be drained to permit maintenance of the fuel transfer equipment.

9.1.3.3 Component Description

The general descriptions and summaries of the design requirements for the spent fuel pool cooling system components are provided below. See Table 9.1-2. The key equipment parameters for the spent fuel pool cooling system components are contained in Table 9.1-3. Additional information regarding the applicable codes and classifications is also available in Section 3.2.

9.1.3.3.1 Spent Fuel Pool Pumps

Two spent fuel pool pumps are provided. These pumps are single stage, horizontal, centrifugal pumps having a coupled pump motor shaft driven by an ac powered induction motor. A mechanical seal is used to prevent leakage to the atmosphere. The pumps have flanged suction and discharge nozzles.

Each pump is sized to provide the flow required by its respective heat exchanger for removal of its design basis heat load. The pumps are redundant for normal refueling heat loads.

9.1.3.3.2 Spent Fuel Pool Heat Exchangers

Two spent fuel pool heat exchangers are installed to provide redundant spent fuel heat removal capability for normal refueling heat loads. These heat exchangers are plate type heat exchangers constructed of austenitic stainless steel. Spent fuel pool water circulates through one side of the heat exchanger while component cooling water (CCW) circulates through the other side.

9.1.3.3.3 Spent Fuel Pool Demineralizers

Two mixed bed type demineralizers are provided to maintain spent fuel pool purity. The demineralizers are initially charged with a hydrogen type cation resin and hydroxyl type anion resin to remove fission and corrosion products. The demineralizers will be borated during initial operation with boric acid. Each demineralizer is sized to accept the maximum purification flow from its respective cooling train. The vessels are constructed of austenitic stainless steel.

9.1.3.3.4 Spent Fuel Pool Filters

Two spent fuel pool filters are provided, one downstream of each demineralizer in the purification branch line of each mechanical train. The filters are sized to collect small particulates and resin fines passed by the demineralizer. They are also sized to pass the maximum design purification flow. The filter assembly is constructed of austenitic stainless steel with disposable filter cartridges.

9.1.3.3.5 Spent Fuel Pool Cooling System Valves

Spent fuel pool cooling system valves operate in low temperature and pressure service. Commercially available valves are used in accordance with the codes and standard of Section 3.2. The basic material of construction is stainless steel.

9.1.3.3.5.1 Locked-In-Position Valves

Refueling Cavity Drain Isolation Valve

There is one locked-open valve in the line from the refueling cavity to the steam generator 2 compartment. This valve is provided so that water in the refueling cavity cannot be trapped and be unavailable for passive recirculation cooling by the passive core cooling system (PXS) following an accident. This valve is locked-closed during refueling operations when the refueling cavity is flooded.

Refueling Cavity Connection for Containment Flooding Isolation Valve

There is one locked-open valve in the line that goes through the wall of the refueling canal to provide a water flow path between the refueling canal and the containment floodup water volume following an accident. This valve is locked open so that as the containment floods, the refueling canal will flood before the compartments that contain passive core cooling system components, which are used for safe shutdown. This valve is locked-closed during refueling operations when the refueling cavity is flooded.

Fuel Transfer Canal Drain Valve

There is one locked-closed valve in the bottom connection to the fuel transfer canal. This valve is provided to prevent inadvertent lowering of the spent fuel pool water level in the event that the gate between the fuel transfer canal and spent fuel pool is open during a seismic event that causes a break in the downstream piping.

9.1.3.3.5.2 Remotely-Operated Valves

Containment Isolation Valves

The spent fuel pool cooling system contains two lines which penetrate containment. They are the lines from the refueling cavity/in-containment refueling water storage tank to the spent fuel pool cooling system suction header and the return line to the refueling cavity/in-containment refueling water storage tank. Two remotely operated valves, one located inside and one outside containment, are provided in the line to the suction header. One remotely operated valve located outside containment and one check valve located inside containment are provided in the return line. These valves are normally closed and are opened only for purification or water transfers between the in-containment refueling water storage tank and the refueling cavity. They are controlled from the main control room. See subsection 6.2.3.

9.1.3.3.6 Piping Requirements

Spent fuel pool cooling system piping is made of austenitic stainless steel. Piping joints and connections are welded, except where flanged connections are required as indicated on the spent fuel pool cooling system piping and instrumentation diagram (Figure 9.1-6).

9.1.3.3.7 Reactor Cavity Seal Ring

The AP1000 reactor cavity seal ring is part of the fuel handling system and is a permanent welded seal ring used to provide the seal between the vessel flange and the refueling cavity floor. The reactor cavity seal ring does not use pneumatic seals and is not subject to a gross failure due to loss of a seal.

Leakage is not expected with this design. Leakage past or through the seal would not significantly affect the water level in the refueling canal and would be detected as an increase in water level in the containment sump. Water level in the sump is a key parameter in reactor coolant leak detection.

9.1.3.3.8 Reactor Cavity Connections

The spent fuel pool cooling system contains connections to the refueling cavity to prevent excessive holdup of water in the reactor cavity following an accident. The piping connection facilitates draining of the reactor cavity to the steam generator compartment following a postulated accident. The line connects at the bottom of the reactor cavity and discharges to a steam generator compartment, and contains a manual locked-open isolation valve and two check valves in series. The isolation valve is closed during refueling operations to facilitate flooding of the reactor cavity for refueling operations.

The spent fuel pool cooling system also contains a connection between the refueling cavity and Room 11300 to provide a water flow path following an accident. This connection is a single pipe through the wall of the refueling cavity and contains a manual locked-open isolation valve. This connection is provided so that as the containment floods, the refueling canal will flood before the compartments that contain passive core cooling system components, which are used for safe shutdown. Subsection 3.4.1.2.2.1 provides a discussion of post-accident containment flooding. The isolation valve is locked-closed during refueling operations to enable flooding of the reactor cavity for refueling operations.

Other connections are provided to the refueling cavity to facilitate proper draining, filling, and purification of the reactor cavity to support refueling operations.

9.1.3.4 System Operation and Performance

The operation of the spent fuel pool cooling system for the pertinent phases of plant operation are described in the following paragraphs.

9.1.3.4.1 Normal Operation

During normal plant operation, one spent fuel pool cooling system mechanical train of equipment is operating. The operating train is aligned to provide spent fuel pool cooling and purification. The other train is available to perform the other functions of the spent fuel pool cooling system such as water transfers or in-containment refueling water storage tank purification.

9.1.3.4.1.1 Ion Exchange Media Replacement

The initial and subsequent fill of ion exchange media is made through a resin fill nozzle on the top of the ion exchange vessel. When the media is ready to be transferred to the solid radwaste system, the vessel is isolated from the process flow. The flush water line is opened to the sluice piping and demineralized water is pumped into the vessel through the normal process outlet connection upward through the media retention screen. The media fluidizes in the upward, reverse flow. When the bed has been fluidized, the sluice connection is opened and the bed is sluiced to the spent resin tanks in the solid radwaste system (WSS). Demineralized water flow continues until the bed has been removed and the sluice lines are flushed clean of spent resin.

9.1.3.4.1.2 Filter Cartridge Replacement

Replacement of spent filter cartridges is performed as described in subsection 11.4.2.3.2.

9.1.3.4.2 Refueling

Both spent fuel pool mechanical trains are in operation during refueling. One train is aligned for spent fuel pool cooling and purification throughout the refueling. The other train performs various support functions during the refueling.

Initially the standby mechanical train is used to purify the water in the in-containment refueling water storage tank to prepare for the refueling. When the refueling cavity is ready to be flooded, the pump aligned for in-containment refueling water storage tank purification is stopped and valves are aligned to gravity drain the in-containment refueling water storage tank to the refueling cavity. Eventually the drain rate slows down and the in-containment refueling water storage tank and the refueling cavity have the same water level. At this time, the standby spent fuel pool pump is aligned to transfer the additional in-containment refueling water storage tank water into the refueling cavity.

This water transfer method improves water clarity in the refueling cavity during refueling operations as compared to conventional pressurized water reactors that have performed this function with their residual heat removal system by flooding up through the reactor vessel into the refueling cavity.

Once the refueling cavity is flooded, the standby mechanical train is re-aligned to cool and purify the refueling cavity. This mode of operation continues as needed. If the heat load is such that both pumps and heat exchangers are needed to cool the spent fuel pool, then the spent fuel pool cooling system can be aligned for that operation.

At the completion of the refueling, the standby spent fuel pool pump is used to transfer the water in the refueling cavity back to the in-containment refueling water storage tank. Once this is complete, the standby train can be aligned to cool the spent fuel pool or may be placed in standby.

9.1.3.4.3 Abnormal Conditions

The AP1000 spent fuel pool cooling system is not required to operate to mitigate design basis events. In the event the spent fuel pool cooling system is unavailable, spent fuel cooling is

provided by the heat capacity of the water in the pool. Connections to the spent fuel pool are made at an elevation to preclude the possibility of inadvertently draining the water in the pool to an unacceptable level.

In the unlikely event of an extended loss of normal spent fuel pool cooling, the water level will drop. Low spent fuel pool level alarms in the control room will indicate to the operator the need to initiate makeup water to the pool. These alarms are provided from safety-related level instrumentation in the spent fuel pool. With the use of makeup water, the pool level is maintained above the spent fuel assemblies for at least 7 days. Initial spent fuel pool water level is controlled by technical specifications. During the first 72 hours any required makeup water is supplied from safety related sources. If makeup water beyond the safety related sources is required between 72 hours and 7 days, water from the passive containment cooling system ancillary water storage tank is provided to the spent fuel pool. The amount of makeup required to provide the 7 day capability depends on the decay heat level of the fuel in the spent fuel pool and is provided as follows:

- When the calculated decay heat level in the spent fuel pool is less than 4.6 MWt, no makeup is needed to achieve spent fuel pool cooling for at least 72 hours.

- When the calculated decay heat level in the spent fuel pool is greater than or equal to 4.6 MWt and less than or equal to 5.4 MWt, safety related makeup from the cask washdown pit is sufficient to achieve spent fuel pool cooling for at least 72 hours. A minimum level of 13.75 feet in the cask washdown pit is provided for this purpose. Availability of the makeup source is controlled by technical specifications.

- When calculated decay heat level in the spent fuel pool is greater than 5.4 MWt makeup from the passive containment cooling water storage tank or passive containment cooling ancillary water storage tank, or combination of the two tanks, is sufficient to achieve spent fuel pool cooling for at least 7 days.

- When the decay heat level in the reactor is less than 9 MW, the passive containment cooling water storage tank is not needed for containment cooling and this water can be used for makeup to the spent fuel pool. This tank provides safety related makeup for at least 72 hours. Between 72 hours and 7 days the tank continues to provide makeup water as required until it is empty. If the passive containment cooling water storage tank empties in less than 7 days, non-safety makeup water can be provided from the passive containment cooling ancillary water storage tank.

- When the decay heat level in the reactor is greater than 9 MW, the water in the passive containment cooling water storage tank is reserved for containment cooling. Safety related spent fuel pool cooling is provided for at least 72 hours from the pool itself and makeup water from the cask washdown pit. After 72 hours, non-safety related makeup can be provided from the passive containment cooling ancillary water storage tank.

- Minimum volume in the passive containment cooling water storage tank for spent fuel pool makeup is 756,700 gallons. Availability of this makeup source for the first 72 hours is

controlled by technical specifications. Minimum volume in the passive containment ancillary water storage tank for spent fuel pool makeup is 175,000 gallons.

Table 9.1-4 provides the calculated timing and spent fuel pool water levels for several limiting event scenarios which would require makeup to the spent fuel pool.

Alignment of the cask washdown pit is accomplished by positioning manual valves located in the waste monitor tank room B (12365) in the auxiliary building. Alignment of the passive containment cooling water storage tank is accomplished by positioning manual valves located in the mid annulus access room (12345) and in the passive containment cooling valve room in the upper shield building. Because these alignments are made by positioning manual valves, they are not susceptible to active failures.

Gravity driven flow from the cask washdown pit to the spent fuel pool is provided as the cask washdown pit water level will follow the spent fuel pool level. Figures 9.1-5 and 9.1-6 show the connection of the cask washdown pit to the spent fuel pool.

Gravity driven flow from the passive containment cooling water storage tank is controlled by a manual throttle valve with local flow indication which is set to achieve the desired flow when the makeup is initiated. Figure 6.2.2-1 shows the flow path from the passive containment cooling water storage tank leading to the spent fuel pool and the tie-in to the spent fuel pool is also shown in Figure 9.1-6.

The flow from the passive containment cooling water storage tank (PCCWST) to the spent fuel pool, required to provide sufficient makeup to the spent fuel pool to keep the fuel covered as the pool water boils off, is 118 gpm. This is the maximum flow required at the initiation of makeup flow from the PCCWST during the worst case conditions in the pool, which is a full core offload. The makeup flow rate required decreases with time as the decay heat decreases.

After 72 hours, makeup water from the passive containment cooling ancillary water storage tank can either be pumped (with the passive containment cooling recirculation pumps) to the passive containment cooling water storage tank and then gravity fed to the spent fuel pool as discussed above, or the water can be pumped directly to the spent fuel pool. When the makeup water is pumped directly to the pool, the flow rate is controlled by the same manual throttle valve which is used to set the flow rate when providing gravity driven flow from the passive containment cooling water storage tank.

The flow provided from the passive containment cooling auxiliary water storage tank (PCCAWST) to the spent fuel pool by the recirculation pumps, required to provide sufficient makeup to the spent fuel pool to keep the fuel covered as the pool water boils off, is 35 gpm. The plant condition associated with this flow is a loss of power combined with a seismic event when the plant is operating at full power, shortly after startup from a refueling outage. This condition results in the maximum flow required from the PCCAWST because cooling water must be supplied to both the PCCWST and the spent fuel pool to provide both containment and spent fuel cooling for a period of four days following the initial three days of passive systems operation.

Spent fuel pool level instrumentation is discussed in Subsection 9.1.3.7.

9.1.3.4.3.1 Failure of a Spent Fuel Pool Cooling System Pump

If a spent fuel pool cooling system pump fails when only one pump is operating, an alarm is actuated. Due to the heat capacity of the water in the spent fuel pool, sufficient time exists for the operators to manually align the standby spent fuel pool cooling system train of equipment (pump/heat exchanger) to cool the spent fuel pool.

9.1.3.4.3.2 Leakage from the Spent Fuel Pool Cooling System

The connections from the spent fuel pool cooling system to the pool are such that leakage in the spent fuel pool cooling system will not result in the pool water level falling to unacceptable levels. The heat capacity of the water in the pool is sufficient to allow the operators enough time to locate the leak and repair it. In the most probable scenario, cooling will be maintained by operation of the standby train of equipment. However, if spent fuel pool cooling must be terminated, sufficient time exists to allow for repairs of a leak in the system.

9.1.3.4.3.3 Loss of Offsite Power

The spent fuel pool cooling system pumps can be manually loaded on the respective onsite standby diesel generator in the event of a loss of offsite power. The spent fuel pool cooling system is capable of providing spent fuel pool cooling following this event.

9.1.3.4.3.4 Station Blackout

Following a loss of ac power (off-site power and both standby diesel generators), the heat capacity of the water in the pool is such that cooling of the fuel is maintained. Table 9.1-4 provides the times before boiling would occur in the pool following station blackout for various scenarios as well as the minimum levels of water that would be reached. Water vapor that evaporates from the surface of the spent fuel pool is vented to the outside environment through an engineered relief panel. This vent path maintains the fuel handling area at near atmospheric pressure conditions. The doses resulting from spent fuel pool boiling have been calculated and are included in Chapter 15. The release concentrations at the site boundary are small fractions of the limits specified in 10 CFR 20, Appendix B with no credit for removal of activity by building ventilation systems (which are not available during loss of ac power situations). The equipment in the fuel handling area, rail car bay\filter storage area, and spent resin equipment and piping areas exposed to elevated temperature and humidity conditions as a result of pool boiling does not provide safety-related mitigation of the effects of spent fuel pool boiling or station blackout. The fuel handling area, rail car bay, and spent resin area do not have connecting ductwork with other areas of the radioactively controlled area of the auxiliary building and connecting floor drains have a water seal which prevents steam migration. The environment in these other areas during spent fuel pool steaming is mild with respect to safety-related equipment qualification and affords access for post-accident actions.

Spent fuel pool makeup for long term station blackout can be provided through seismically qualified safety-related makeup connections from the passive containment cooling system. These connections are located in an area of the auxiliary building that can be accessed without exposing operating personnel to excessive levels of radiation or adverse environmental conditions during

boiling of the pool. Operating personnel are not required to enter the fuel handling area when normal cooling is not available, and are not required to enter the area to recover normal cooling.

9.1.3.4.3.5 Reactor Coolant System Makeup

During an event in which the reactor coolant system pressure and inventory decrease the normal residual heat removal system pumps are started to provide makeup water to the reactor coolant system when the primary system pressure is sufficiently reduced for injection to start. The AP1000 procedure for post-accident operation of the normal residual heat removal pumps is that the operators align the pumps to the cask loading pit. This is accomplished by the operator opening a motor operated isolation valve (see subsection 5.4.7.3.3.5) between the cask loading pit and the normal residual heat removal pump suction line. When the water in this pit nears empty, the pump suction is re-aligned to the IRWST/containment recirculation connection so that the pumps can continue to provide injection to the reactor coolant system. The refueling water from the cask loading pit provides additional water into containment (and thus additional driving head) for the post accident containment recirculation. The AP1000 emergency operating procedures will include a restriction on use of this injection method if the gate between the spent fuel pool and the cask loading pit is open at the initiation of the event. In this case the operators will be instructed to close the gate, if possible, before initiating the makeup flow with the normal residual heat removal pumps. Injection from the cask loading pit will only be initiated if the gate can be closed. The gate is normally in the closed position unless cask loading operations are in progress.

9.1.3.5 Safety Evaluation

The only spent fuel pool cooling system safety-related functions are containment isolation and emergency makeup connections to the spent fuel pool. Containment isolation evaluation is described in subsection 6.2.3. The following provides the evaluation of the design of the spent fuel pool as well as the spent fuel pool cooling system:

- The spent fuel pool is designed such that a water level is maintained above the spent fuel assemblies for at least 7 days following a loss of the spent fuel pool cooling system, using only onsite makeup water (see Table 9.1-4). The minimum water level to achieve sufficient cooling is the subcooled, collapsed level (without vapor voids) required to cover the top of the fuel assemblies.

- The maximum heat load is assumed to be the heat load for a full core off load immediately following a refueling in which 44 percent of the fuel assemblies were replaced.

- Safety-related makeup water can be supplied to the fuel pool from the fuel transfer canal, cask washdown pit, and passive containment cooling water storage tank.

- The spent fuel pool cooling system includes safety-related connections from the passive containment cooling system water storage tank in the passive containment cooling system to establish safety-related makeup to the spent fuel pool following a design basis event including a seismic event.

- In addition to the safety-related water sources, makeup water is also obtained from the passive containment cooling system ancillary water storage tank. Water from this tank can be pumped by the passive containment cooling system recirculation pumps either to the passive containment cooling water storage tank (and then gravity fed to the spent fuel pool), or directly to the spent fuel pool.

Radiation shielding normally provided by the water above the fuel is not required when normal spent fuel pool cooling is not available. Personnel are not permitted in the area when the level in the pool is below the minimum level.

The acceptability of the design of the spent fuel pool cooling system is based on specific General Design Criteria (GDCs) and Regulatory Guides as described in Sections 3.1 and 1.9.

9.1.3.6 Inspection and Testing Requirements

9.1.3.6.1 Preoperational Testing, Analysis, and Inspection

9.1.3.6.1.1 Pump Flow Capability Testing

Each spent fuel pool cooling system pump will be tested. The flow paths will be aligned for normal spent fuel pool cooling by one train of spent fuel pool cooling system components. The flow delivered to each spent fuel pool cooling system heat exchanger will be measured by a flow instrument at the spent fuel pool cooling system pump discharge. The testing confirms that the pumped flow is equal to or greater than the minimum value shown in Table 9.1-3. This is the minimum value for the spent fuel pool cooling system to meet its functional requirement of normal spent fuel pool cooling. The flow delivered to each spent fuel pool cooling system heat exchanger will be measured by a flow instrument at the spent fuel pool cooling system pump discharge. The testing confirms that the pumped flow is equal to or greater than the minimum value shown in Table 9.1-3. This is the minimum value for the spent fuel pool cooling system to meet its functional requirement of normal spent fuel pool cooling.

9.1.3.6.1.2 Heat Transfer Capability Analysis

An analysis will be performed on the spent fuel pool cooling system heat exchangers during heat exchanger design. The analysis is to confirm that the product of the overall heat transfer coefficient and effective heat transfer area, UA, of each heat exchanger is equal to or greater than the minimum value shown in Table 9.1-3. This is the minimum value for the spent fuel pool cooling system to meet its functional requirement of normal spent fuel pool cooling.

9.1.3.6.1.3 Dimensional Inspections

The contained volumes of water in the spent fuel pool, fuel transfer canal and the cask washdown pit are used for cooling the spent fuel by boiling after a prolonged loss of normal spent fuel pool cooling. The inspections are to confirm that the contained volumes are equal to or greater than the minimum values shown in Table 9.1-2. These are the minimum values for the spent fuel pool cooling system to meet its safety-related requirement of spent fuel pool cooling for 3 days after loss of normal cooling.

9.1.3.6.2 Routine Testing

Active components of the spent fuel pool cooling system are either in continuous or intermittent use during normal system operation. Periodic visual inspection and preventive maintenance are conducted.

No specific equipment tests are required since system components are normally in operation when spent fuel is stored in the fuel pool. Sampling of the fuel pool water for gross activity, tritium and particulate matter is conducted periodically.

9.1.3.7 Instrumentation Requirements

The instrumentation provided for the spent fuel pool cooling system is discussed in the following paragraphs. Alarms and indications are provided as noted.

A. Temperature

Instrumentation is provided to measure the temperature of the water in the spent fuel pool and to give indication as well as annunciation in the main control room when normal temperatures are exceeded.

Instrumentation is also provided to give indication of the temperature of the spent fuel pool water as it leaves either heat exchanger.

B. Pressure

Instrumentation is provided to measure and give indication of the pressures in the spent fuel pool pump suction and discharge lines. Instrumentation is also provided at locations upstream and downstream from the spent fuel pool filter and demineralizer so that pressure differential across this equipment can be determined. High differential pressure across the spent fuel pool filter and demineralizer is annunciated in the main control room.

C. Flow

Instrumentation is provided to measure and give remote indication of the spent fuel pool cooling loop flow downstream of the spent fuel pool pumps. Purification flow is also continuously measured.

D. Level

Safety-related instrumentation is provided to give an alarm in the main control room when the water level in the spent fuel pool reaches the low-low-level setpoint. This instrumentation is used for post-accident monitoring on the spent fuel pool level. (See Table 7.5-1)

Non-safety-related instrumentation is provided to give an alarm in the main control room when the water level in the cask loading pit reaches either the high-level or low-level setpoint. This instrumentation is used to alert the operator to a low level in the cask loading

pit when injecting water from the pit into the reactor coolant system with the normal residual heat removal pumps.

9.1.4 Light Load Handling System (Related to Refueling)

The fuel handling and refueling system consists of equipment and structures used for conducting the refueling operation. This system conforms to General Design Criteria as defined in Section 3.1. The light load handling system meets the guidelines of American Nuclear Society (ANS) 57.1 (Reference 6). Figures 1.2-9 and 1.2-14 indicate the relationship between the light load handling system and the fuel handling areas.

9.1.4.1 Design Basis

9.1.4.1.1 Safety Design Basis

The following safety design basis apply to the light load handling system:

A. Fuel handling devices have provisions to avoid dropping or jamming of fuel assemblies during transfer operation.

B. Handling equipment has provisions to avoid dropping of fuel handling devices during the fuel transfer operation.

C. Handling equipment used to raise and lower spent fuel has a limited maximum lift height so that the minimum required depth of water shielding is maintained.

D. The fuel transfer system, where it penetrates the containment, has provisions to preserve the integrity of the containment pressure boundary.

E. Criticality during fuel handling operations is prevented by the geometrically safe configuration of the fuel handling equipment.

F. In the event of a safe shutdown earthquake (SSE), handling equipment cannot fail in such a manner as to prevent required function of seismic Category 1 equipment.

G. The inertial loads imparted to the fuel assemblies or core components during handling operations are less than potential damage causing loads.

H. Physical safety features are provided for personnel who operate handling equipment.

9.1.4.1.2 Power Generation Design Basis

Design criteria for the light load handling system are as follows:

A. The primary design requirement of the equipment is reliability. A conservative design approach is used for load bearing parts.

B. The refueling machine and fuel handling machine are designed and constructed in accordance with applicable portions of the Crane Manufacturers Association of America, Inc. (CMAA), Specification 70 for Class A-1 service (Reference 7).

C. The static design loads for the crane structures and lifting components are normal dead and live loads plus the fuel assembly weight.

D. The allowable stresses for the refueling machine and fuel handling machine structures supporting the weight of a fuel assembly are as specified in the American Institute of Steel Construction (AISC) Manual.

E. The design load on the wire rope hoisting cables does not exceed 0.20 times the average breaking strength. Two independent cables are used, and each is assumed to carry one half the load.

F. Components critical to the operation of the equipment are assembled with the fasteners restrained from loosening under vibration.

9.1.4.2 System Description

The light load handling system consists of the equipment and structures needed for the refueling operation. This equipment is comprised of fuel assemblies, core component and reactor component hoisting equipment, handling equipment, and a fuel transfer system. The structures associated with the fuel handling equipment are the refueling cavity, the transfer canal, the fuel transfer tube, the spent fuel pool, the cask loading area, the new fuel storage area, and the new fuel receiving and inspection area.

9.1.4.2.1 Fuel Handling Description

The fuel handling equipment is designed to handle the spent fuel assemblies underwater from the time they leave the reactor vessel until they are placed in a container for shipment from the site. Underwater transfer of spent fuel assemblies provides an effective and transparent radiation shield, as well as a reliable cooling medium for removal of decay heat. The boric acid concentration in the water is sufficient to preclude criticality.

The associated fuel handling structures may be generally divided into two areas: the refueling cavity which is flooded only during plant shutdown for refueling, and the spent fuel pool and transfer canal, which is kept full of water. See subsection 9.1.1.3 for new fuel assembly storage. The new and spent fuel storage areas are accessible to operating personnel. The refueling cavity and the fuel storage area are connected by the fuel transfer tube which is fitted with a quick opening hatch on the canal end and a valve on the fuel storage area end. The hatch is in place except during refueling to provide containment integrity. Fuel is carried through the tube on an underwater transfer car.

Fuel is moved between the reactor vessel and the fuel transfer system by the refueling machine. The fuel transfer system is used to move a fuel assembly and its associated core component between the containment building and the auxiliary building fuel handling area. After a fuel assembly is placed in the fuel container, the lifting arm pivots the fuel assembly to the horizontal

position for passage through the fuel transfer tube. After the transfer car transports the fuel assembly through the transfer tube, the lifting arm at that end of the tube pivots the assembly to a vertical position so that the assembly can be lifted out of the fuel container.

In the fuel handling area, fuel assemblies are moved about by the fuel handling machine. Initially, a short tool is used to handle new fuel assemblies, but the new fuel elevator must be used to lower the assembly to a depth at which the fuel handling machine can place the new fuel assemblies into or out of the spent fuel storage racks.

Decay heat, generated by the spent fuel assemblies in the fuel pool is removed by the spent fuel pool cooling and cleanup system. After a sufficient decay period, the spent fuel assemblies are removed from the fuel racks and loaded into a spent fuel shipping cask for removal from the site.

9.1.4.2.2 Refueling Procedure

New fuel assemblies received for refueling are removed one at a time from the shipping container and moved into the new fuel assembly inspection area. After inspection, the accepted new fuel assemblies are stored in the new fuel storage rack. For the initial core load, some new fuel assemblies may be stored in the spent fuel pool.

Prior to initiating the refueling operation, the reactor coolant system (RCS) is borated and cooled down to refueling shutdown conditions as specified in the Technical Specifications. Criticality protection for refueling operations is specified in the Technical Specifications. The following significant points are addressed by the refueling procedure:

- The refueling water and the reactor coolant contain a nominal boron concentration of 2700 ppm boron. This concentration is sufficient to keep the core five percent $\Delta k/k$ subcritical during the refueling operations.

- The water level in the refueling cavity is high enough to keep the radiation levels within acceptable limits when the fuel assemblies are removed from the core. Radiation monitoring is described in Section 11.5.

- Continuous communications are established and maintained between the main control room and the personnel engaged in fuel handling operations. One or more of the systems described in subsection 9.5.2 are used for this communication.

The refueling operation is divided into four major phases: preparation, reactor disassembly, fuel handling, and reactor assembly. A general description of a typical refueling operation through these phases is provided below.

9.1.4.2.2.1 Phase I - Preparation

The reactor is shut down, borated, and cooled to refueling conditions ($\leq$ 140°F) with a final k_{eff} less than 0.95 (all rods in). Following a radiation survey, the containment building is entered. At this time, the coolant level in the reactor vessel is lowered to a point slightly below the vessel flange. The refueling machine console is removed from storage and placed on the refueling

machine and cables are connected. Then, the fuel transfer equipment and refueling machine are checked for operation (subsection 9.1.4.4).

9.1.4.2.2.2 Phase II - Reactor Disassembly

Head cables are disconnected at the integrated head package (IHP) connector plate to allow removal of the vessel head. See subsection 3.9.7 for a discussion of the integrated head package. The refueling cavity is prepared for flooding by checking the underwater lights, tools, and fuel transfer system; closing the refueling cavity drain lines; and removing the hatch from the fuel transfer tube. With the refueling cavity prepared for flooding, the vessel head is unseated and raised above the vessel flange using the containment polar crane. See subsection 9.1.5 for requirements for the polar crane. Water from the in-containment refueling water storage tank (IRWST) is transferred into the refueling cavity by gravity and the spent fuel pool cooling system (See subsection 9.1.3). The vessel head and the water level in the refueling cavity are raised, keeping the water level just below the vessel head. When the water reaches a safe shielding depth (subsection 9.1.4.3.7), the vessel head is taken to its storage pedestal. The control rod drive shafts are disconnected. The internals lift rig is installed and the upper internals are removed from the vessel. See subsection 9.1.5 for discussion of lifting rig requirements and design. The fuel assemblies are now free from obstructions, and the core is ready for refueling.

9.1.4.2.2.3 Phase III - Fuel Handling

The refueling sequence is started with the refueling machine.

The general fuel handling sequence is as follows:

1. The refueling machine is positioned over a fuel assembly in the core.
2. The refueling machine mast is lowered over a fuel assembly and engages it.
3. The refueling machine withdraws a spent fuel assembly from the core and raises it to a pre-determined height sufficient to clear the vessel flange and still leave sufficient water covering the fuel assembly.
4. The fuel transfer system car is moved into the refueling cavity from the fuel storage area, and the fuel basket is pivoted to the vertical position by the lifting arm.
5. The refueling machine is moved to line up the fuel assembly with the empty fuel basket.
6. The refueling machine loads the spent fuel assembly into the empty fuel basket of the transfer car.
7. The refueling machine then moves back over the core area, and it is aligned over the next fuel assembly to be removed in the core offload sequence..
8. In parallel with item 7 above, the fuel basket is pivoted to the horizontal position and the fuel transfer system container is moved through the fuel transfer tube to the fuel handling area by the transfer car and pivoted to the vertical position.

9. The spent fuel assembly is then unloaded from the fuel basket by the fuel handling machine.

10. The spent fuel assembly is placed in the spent fuel storage rack.

11. The fuel basket is pivoted to the horizontal position, moved back into the containment building and pivoted to the vertical position.

12. This procedure is repeated until the core is offloaded.

13. Core reload is essentially the reverse of the offload sequence described above.

9.1.4.2.2.4 Phase IV - Reactor Reassembly

Reactor reassembly, following refueling, is achieved by reversing the operations given in Phase II - Reactor Disassembly.

During a reassembly of the reactor, the vessel head and the water are lowered simultaneously until the vessel head engages the guide studs. At this point of the reassembly, the water is lowered to the top of the reactor vessel flange.

9.1.4.2.3 Spent Fuel Cask Loading

The spent fuel assemblies are normally stored in the spent fuel pool, until fission product activity is low enough to permit shipment. The spent fuel assemblies are then transferred to a shipping cask which is designed to shield radiation. Provisions for handling the spent fuel cask are discussed in subsection 9.1.5.

The following procedure briefly outlines the typical steps of this operation, assuming that the cask loading pit has been previously filled with water and the gate between the cask loading pit and the spent fuel pool has been removed or opened:

1. The transfer cask containing a clean, empty spent fuel canister is brought into the cask washdown. The spent fuel canister is removed as necessary and prepared for cask loading.

2. The transfer cask/spent fuel canister are placed into the cask loading pit.

3. The fuel handling machine is positioned over the specific fuel assembly to be shipped out of the spent fuel storage rack. The fuel assembly is picked up and transported into the cask loading pit. During the transfer process the fuel assembly is always maintained with the top of the active fuel at least 8.75 feet below the water surface. This provides confidence that the direct radiation from the fuel at the surface of the water is minimal.

4. Once the fuel transfer process is complete, the lid is placed on top of the cask to provide the required shielding.

5. The cask is then moved to the washdown pit and cleaned with demineralized water. Decontamination procedures can be started at this time.

6. When the spent fuel canister closure and drying processes are complete, the transfer cask is prepared for transfer into a storage or shipping container as applicable.

During the operations, sufficient water is maintained between plant personnel and fuel assemblies that are being moved to limit dose levels to those acceptable for continuous occupational exposure.

9.1.4.2.4 Component Description

A. Fuel Transfer Tube

The fuel transfer tube penetrates the containment and spent fuel area and provides a passageway for the conveyor car during refueling. During reactor operation, the fuel transfer tube is sealed at the containment end and acts as part of the containment pressure boundary. See subsection 3.8.2.1.5 for discussion of the fuel transfer penetration.

B. Fuel Handling Machine

The fuel handling machine performs fuel handling operations in the new and spent fuel handling area. It also provides a means of tool support and operator access for long tools used in various services and handling functions. The fuel handling machine is equipped with two 2-ton hoists, one of which is single failure proof.

C. New Fuel Assembly Handling Tool

The new fuel assembly handling tool is used to lift and transfer new fuel assemblies from the new fuel shipping containers to the new fuel storage rack. The tool is also used to transfer new fuel assemblies from the new fuel storage rack to the new fuel elevator.

D. Spent Fuel Assembly Handling Tool

The spent fuel assembly handling tool is used to lift and transfer spent fuel assemblies from the fuel transfer system to the spent fuel racks and new fuel from the elevator to the spent fuel racks.

E. New Fuel Elevator Hoist

The new fuel elevator lowers new fuel assemblies from the fuel handling area operating floor into the spent fuel pool where they can be picked up by the fuel handling machine.

F. New Rod Cluster Control Handling Tool

The new rod cluster control handling tool is used to lift and transfer new control rods from their shipping containers to the new fuel assemblies, and between new assemblies in the new fuel storage racks.

G. Refueling Machine

The refueling machine performs fuel handling operations in the containment building. It also provides a means of tool support and operator access for long tools used for service, control rod latching and unlatching, and for various handling functions.

H. Burnable Poison Rod Assembly Handling Tool

The burnable poison rod assembly handling tool is used to lift and transfer burnable poison rod assemblies between assemblies and/or storage fixtures.

I. Burnable Poison Rod Assembly Rack Insert

The burnable poison rod assembly rack insert is used to store burnable poison rod assemblies or control rods in the spent fuel storage racks.

J. Fuel Transfer System

The fuel transfer system conveys fuel assemblies between the containment building and the auxiliary building fuel handling area.

K. Not used.

L. Control Rod Drive Shaft Unlatching Tool

The control rod drive shaft unlatching tool is used to latch and unlatch the control rod drive shafts from the rod cluster control assemblies. It is operated from the refueling machine walkway.

M. Control Rod Drive Shaft Handling Tool

The control rod drive shaft handling tool is used to latch and unlatch the control rod drive shafts (CRDS) from the rod cluster control assemblies.

N. Irradiation Sample Handling Tool

The irradiation sample handling tool is used to remove irradiated reactor vessel surveillance capsules in the holders located in the reactor internals. It is also used for removing and installing the irradiation sample access plugs in the reactor internals.

O. Irradiation Tube End Plug Seating Jack

The irradiation tube end plug seating jack is used to push the irradiation samples into the specimen guides for the last few inches.

P. Control Rod Drive Shaft Storage Racks

The control rod drive shaft storage racks are located on the refueling cavity wall and are used to store spare control rod drive shafts and any ones that might be removed from the upper internals during refueling.

9.1.4.3 Safety Evaluation

9.1.4.3.1 Refueling Machine

The refueling machine design includes the following provisions to provide for safe handling of fuel assemblies:

A. Safety Interlocks

Operations which could endanger the operator or damage the fuel, designated below by an asterisk (*), are prevented by mechanical or failure tolerant electrical interlocks or by redundant electrical interlocks. Other interlocks are intended to provide equipment protection and may be implemented either mechanically or by electrical interlock and are not required to be fail safe.

Fail safe electrical design of a control system interlock is applied according to the following rules:

1. Fail safe operation of an electrically operated brake is such that the brake engages on loss of power.

2. Fail safe operation of a relay is such that the de-energized state of the relay inhibits unsafe operation.

3. Fail safe operation of a switch, termination, or wire is such that breakage or high resistance of the circuit inhibits unsafe operation. The dominant failure mode of the mechanical operation of a cam-operated limit switch is sticking of the plunger in its depressed position. Therefore, use of the plunger-extended position (on the lower part of the operating cam) to energize a relay is consistent with fail safe operation.

Those parts of a control system interlock which are not or cannot be operated in a fail safe mode as defined in the preceding rules are supplemented by a redundant component or components to provide the requisite protection. Required fail safe operations are:

*1. The refueling machine can only place a fuel assembly in the core, in the in-containment storage rack, or in the fuel transfer system.

*2. When the refueling machine gripper is engaged, the machine cannot traverse unless the fuel assembly bottom nozzle is clear of the lower core plate alignment pins..

*3. When the refueling machine gripper is disengaged, the machine cannot traverse unless the gripper is withdrawn into the mast.

*4. Simultaneous traversing and hoisting operations are prevented.

*5. The refueling machine hoist up travel stops at a predetermined height to prevent a spent fuel assembly from being raised above the minimum water depth for shielding.

*6. When a fuel assembly is raised or lowered, interlocks provide confidence that the refueling machine can only apply loads which are within safe operating limits.

*7. The fuel gripper is monitored by devices to confirm operation to the fully engaged or fully disengaged position. Alarms are actuated if both engage and disengage switches are actuated at the same time or if neither is actuated.

8. Lowering of the gripper is not permitted if slack cable exists in the hoist.

9. The gripper tube is prevented from lowering completely out of the mast.

10. Before the fuel gripper can release a fuel assembly, the fuel gripper must be in its down position in the core, in the in-containment storage rack, or in the fuel transfer system.

*11. The weight of the fuel assembly must be off the gripper before the fuel gripper can release a fuel assembly.

12. The refueling machine hoist is prevented from moving in the transfer machine zone unless the upender is vertical. An interlock is provided from the fuel transfer system to the refueling machine to accomplish this.

B. Bridge and Trolley Hold-Down Devices

Both refueling machine bridge and trolley are horizontally restrained on the rails by guide rollers on either side of the rail. Hold down devices are used to prevent the bridge or trolley from leaving the rails in the event of a seismic event.

C. Main Hoist Braking System

The main hoist is equipped with two independent braking systems. The winch has a mechanically-operated load brake to prevent overhauling, and a solenoid activated motor brake. Both brakes are rated at 125 percent of the hoist design load.

D. Fuel Assembly Support System.

The main hoist system is supplied with redundant paths of load support such that failure of any one component will not result in free fall of the fuel assembly. Two wire ropes are anchored to the winch drum and carried to a load equalizing mechanism on the top of the gripper tube.

The fuel assembly gripper has four fingers gripping the fuel, any two of which will support the fuel assembly weight.

During each refueling outage and prior to removing fuel, the gripper and hoist system are routinely load tested to 125 percent of the maximum setting on the hoist load limit switch.

9.1.4.3.2 Fuel Transfer System

The following personnel safety features are provided for in the fuel transfer system:

A. Transfer Car Permissive Switch

The transfer car controls are located in the fuel handling area, and conditions in the containment are therefore not visible to the operator. The transfer car permissive switch allows the fuel transfer system containment operator to exercise some control over car movement if conditions visible to him warrant such control.

B. Lifting Arm - Transfer Car Position

An interlock on the fuel transfer system prevents the upender from being moved from the horizontal to the vertical position if the transfer car has not reached the end of its travel.

C. Transfer Car - Valve Open

An interlock on the transfer tube valve permits transfer car operation only when the transfer tube valve position switch indicates the valve is fully open.

D. Fuel Container - Refueling Machine

The fuel transfer system is interlocked with the refueling machine. Whenever the transfer car is located in the refueling cavity, the fuel transfer system cannot be operated unless the refueling machine mast is in the fully retracted position or the refueling machine is over the core.

E. Lifting Arm - Fuel Handling Machine

On the spent fuel pool side, the fuel transfer system is interlocked with the fuel handling machine. The fuel transfer system cannot be operated until the loaded fuel handling machine hoist is at the up limit, the empty tool is clear of the upender, or the fuel handling machine is moved away from the fuel transfer system area. An interlock is provided from the fuel handling machine to the fuel transfer system to accomplish this.

9.1.4.3.3 Fuel Handling Machine

The fuel handling machine design includes the following provisions to provide for safe handling of fuel assemblies and other components within the auxiliary building fuel handling area:

A. Safety Interlocks

Operations that could endanger the operator or damage the fuel, designated below by an asterisk (*), are prevented by mechanical or failure tolerant electrical interlocks, or by

redundant electrical interlocks. Other interlocks are intended to provide equipment protection and may be implemented either mechanically or by electrical interlock and are not required to be fail safe.

Fail safe electrical design of a control system interlock is applied according to the following rules:

1. Fail safe operation of an electrically operated brake is such that the brake engages on loss of power.

2. Fail safe operation of a relay is such that the de-energized state of the relay inhibits unsafe operation.

3. Fail safe operation of a switch, termination, or wire is such that breakage or high resistance of the circuit inhibits unsafe operation.

Those parts of a control system interlock that are not or cannot be operated in a fail safe mode, as defined in the preceding rules, are supplemented by a redundant component or components to provide the requisite protection. Required fail safe operations are as follows:

*1. The fuel handling machine, and its associated fuel handling tool, can only place a fuel assembly in the new fuel rack, spent fuel racks, fuel transfer system, new fuel elevator, spent fuel cask, fuel inspection/repair station, or rail car bay traveler.

*2. When the hoist load weighing system detects a load greater than the spent fuel assembly handling tool, the machine cannot traverse unless the hoist is at the up limit. For new fuel handling, the load is greater than a new fuel handling tool.

*3. Simultaneous traversing and hoisting operations are prevented.

*4. The fuel handling machine hoist up travel stops at a predetermined height to prevent a spent fuel assembly from being raised above the minimum water depth for shielding.

*5. When a fuel assembly is raised or lowered, interlocks provide confidence that the fuel handling machine can apply only loads that are within safe operating limits.

*6. Lowering of the hoist is not permitted if slack cable exists.

*7. The fuel handling machine hoist is prevented from moving in the transfer machine zone unless the fuel transfer machine upender is vertical. An interlock is provided from the fuel transfer system to the fuel handling machine to accomplish this.

B. Bridge Hold-Down Devices

The fuel handling machine bridge is horizontally restrained on the rails by guide rollers on either side of the rail. Hold-down devices are used to prevent the bridge from leaving the rails in a seismic event.

C. Hoist Braking System

The hoists are equipped with a solenoid-activated motor brake. The brake is rated at 125 percent of the hoist design load.

D. Fuel Assembly Support System

The hoists are supplied with redundant paths of load support so that failure of any one component will not result in a free fall of the fuel assembly. When redundant paths are not practical, conservative safety factors shall be applied.

9.1.4.3.4 Fuel Handling Tools and Equipment

Fuel handling tools and equipment handled over an open reactor vessel or spent fuel handling area are designed to prevent inadvertent decoupling from machine hooks; i.e., lifting rigs are pinned to the machine hook, and safety latches are provided on hook supporting tools.

Tools required for handling internal reactor components are designed with fail safe features that prevent disengagement of the component in the event of operating mechanism malfunction.

These safety features apply to the following tools:

A. Control Rod Drive Shaft Unlatching Tool

The air cylinders actuating the gripper mechanism are equipped with backup springs which close the gripper in the event of loss of air to the cylinder. Air-operated valves are equipped with safety locking rings to prevent inadvertent actuation.

B. New Fuel Assembly Handling Tool

When the fingers are latched, the actuating handle is positively locked, preventing inadvertent actuations. The tool is preoperationally tested at 125 percent of the weight of one fuel assembly and the heaviest core component.

C. Spent Fuel Assembly Handling Tool

When the fingers are latched, the actuating handle is positively locked to prevent inadvertent actuations. The tool is preoperationally tested at 125 percent of the weight of one fuel assembly and the heaviest core component.

9.1.4.3.5 Seismic Considerations

The equipment classifications for fuel handling and storage equipment are listed in Section 3.2, which provides criteria for the seismic design of the various components.

For safety and non-safety equipment, design for the safe shutdown earthquake (SSE) is considered if failure might adversely affect safety-related equipment.

9.1.4.3.6 Containment Pressure Boundary Integrity

The fuel transfer tube which connects the refueling cavity (inside the containment) and the fuel storage area (outside the containment) is closed on the refueling cavity side by a hatch except during refueling operations. Two seals are located around the periphery of the hatch with leak-check provisions between them.

9.1.4.3.7 Radiation Shielding

During spent fuel transfer, the exposure rate to the operator is 2.5 millirem per hour or less. This is accomplished by maintaining a minimum of 8.75 feet of water above the top of the active fuel height during handling operations.

The fuel handling devices used to lift spent fuel assemblies are the refueling machine and the fuel handling machine. The fuel handling machine hoists require the use of the spent fuel handling tool to lift spent fuel. Both the refueling machine and fuel handling machine contain positive stops which prevent the fuel assembly from being raised above a safe shielding height.

9.1.4.4 Inspection and Testing Requirements

The test and inspection requirements for the equipment in the light load handling system are as follows:

A. Fuel Handling Machine, Refueling Machine, and New Fuel Elevator

The minimum acceptable tests include the following:

- Hoist and cable are load tested at 125 percent of the rated load.
- The equipment is assembled and checked for function and operation.

The following maintenance and checkout tests are recommended to be performed prior to refueling:

- Visual inspection for loose or foreign parts; maintenance to keep free of dirt and grease.
- Lubrication of exposed gears with proper lubricant.
- Visual inspection of hoist cables for worn or broken strands.
- Visual inspection of limit switches and limit switch actuators for any sign of damaged or broken parts.
- Inspection of the equipment for function and operation.

B. Fuel Assembly Handling Tools

The minimum acceptable tests are as follows:

- The tool shall be load tested to 125 percent of the rated load.
- The tool is assembled and checked for operation.

The following maintenance and checkout tests are recommended to be performed prior to use of the tools:

- Visual inspection of the tool for dirt and loose hardware and for any signs of damage such as nicks and burrs.
- Check of the tool for operation.

C. Fuel Transfer System

The minimum acceptable test is that the system is assembled and checked for function and operation.

The following maintenance and checkout tests are recommended to be performed prior to refueling:

- Visual inspection for loose or foreign parts; maintenance to keep free of dirt and grease.
- Lubrication of exposed gears.
- Visual inspection of limit switches and limit switch actuators for any sign of damaged or broken parts.
- Check of system for function and operation.

9.1.5 Overhead Heavy Load Handling Systems

Heavy load handling systems consist of equipment which lift loads whose weight is greater than the combined weight of a single spent fuel assembly and its handling device. This equipment is part of the mechanical handling system (MHS) and is located throughout the plant. The principal equipment is the containment polar crane and the cask handling crane. Other such equipment includes the reactor coolant pump handling machine, bridge cranes, miscellaneous monorail hoists and fixed hoists. Table 9.1-5 lists the heavy load handling systems located in the safety-related areas of the plant, specifically the nuclear island.

For AP1000, a heavy load is a load whose weight is greater than the combined weight of a fuel assembly with rod cluster control, and the associated handling device. This combined weight is about 3100 pounds. Thus, a heavy load is defined as a load weighing more than 3100 pounds.

9.1.5.1 Design Basis

9.1.5.1.1 Safety Design Basis

Section 3.2 identifies safety and seismic classifications for mechanical handling system equipment. Heavy load handling systems are generally classified as nonsafety-related, nonseismic systems. The components of single-failure-proof systems necessary to prevent uncontrolled lowering of a critical load are classified as safety-related.

The polar crane, cask handling crane, containment equipment hatch hoist, and containment maintenance hatch hoist are single-failure-proof systems and are classified as seismic Category I. They are designed to support a critical load during and after a safe shutdown earthquake. The equipment and maintenance hatches are required to be operational after a safe shutdown earthquake.

A critical load is a heavy load that, if dropped, could cause unacceptable damage to reactor fuel elements, or loss of safe shutdown or decay heat removal capability. The consequences of a postulated load drop are considered to be acceptable when the four evaluation criteria of NUREG-0612 (Reference 8), Paragraph 5.1, are satisfied.

Heavy loads handled in safety-related areas of the plant are classified as critical loads unless the consequences of a load drop have been evaluated and found to be within acceptable limits. (See subsection 9.1.5.3.)

Plant arrangement and the design of heavy load handling systems are based on the following criteria:

- To the extent practicable, heavy loads are not carried over or near safety-related components, including irradiated fuel and safe shutdown components. Safe load paths are designated for heavy load handling in safety-related areas.
- The likelihood of a load drop is extremely small (that is, the handling system is single failure proof), or the consequences of a postulated load drop are within acceptable limits.
- Single-failure-proof systems can stop and hold a critical load following the credible failure of a single component.
- Single-failure-proof systems can support a critical load during and after a safe shutdown earthquake.

9.1.5.1.2 Codes and Standards

The mechanical handling system conforms to the applicable codes and standards listed in Section 3.2. The polar crane and cask handling cranes are designed according to NUREG-0554 (Reference 11) supplemented by ASME NOG-1 (Reference 12) for a Type I single failure proof crane. Other overhead cranes and hoists handling heavy loads are designed according to ASME NOG-1 and to the applicable ANSI standard.

NUREG-0612 references ANSI B30.2 (Reference 9) and CMAA-70 (Reference 7) for the design of cranes in safety-related areas, and references NUREG-0554 (Reference 11) for the design of single-failure-proof cranes. ASME NOG-1 also provides design guidance consistent with that provided by NUREG-0554 for the design of single-failure-proof cranes. The design of AP1000 cranes complies with the requirements of NUREG-0612.

9.1.5.2 System Description

Table 9.1-5 lists heavy load handling systems in the nuclear island. The polar crane and cask handling crane are designed according to the requirements of NUREG-0554 supplemented by ASME NOG-1 for a Type I, single-failure-proof crane. A description of these cranes is provided in this subsection. The containment equipment hatch hoist and maintenance hatch hoist incorporate single-failure-proof features based on NUREG-0612 guidelines. Based on the conservative design of these heavy load handling systems and associated special lifting devices, slings, and load lift points (see subsection 9.1.5.3), a load drop of the critical loads handled by the polar crane, cask handling crane, containment equipment hatch hoist, and maintenance hatch hoist is unlikely. Except for the containment polar crane, cask handling crane, containment equipment hatch hoist, and containment maintenance hatch hoist, the heavy load handling systems are not single-failure-proof.

9.1.5.2.1 Polar Crane General Description

The containment polar crane is a bridge crane mounted on a circular runway rail supported by the containment structure. The bridge consists of two welded steel box girders held together with structural end beams. The two end beams are supported by wheeled trucks that travel on top of the runway rail.

The trolley is mounted on wheeled trucks which move by tractive power over rails secured to the crane girders. The trolley provides structural support for the crane hoisting machinery. Devices are installed to preclude derailment of the bridge or trolley under seismic loading.

Two electric-powered hoists are provided, a main hoist and an auxiliary hoist. Each hoist raises and lowers loads by reeving wire rope through upper and lower sheaves. The lower sheaves are an integral part of the load block. A hook is attached to each load block.

9.1.5.2.1.1 System Operation

The polar crane lifts a variety of loads for refueling and maintenance, such as the reactor vessel integrated head package, reactor internals, and the reactor coolant pump components. The crane is designed to withstand the containment environmental conditions during all modes of plant operation, including pressurization and depressurization of the containment. The crane is designed to operate only during shutdown periods.

Movements of the bridge, trolley, main, and auxiliary hoists can be controlled from the operator's cab or from a remote control. Both the cab and remote controls include a main power control switch. The remote control is equipped with a keylock switch that inhibits control from the cab. Motion control push buttons in the cab and on the remote return to the OFF position when released.

Bridge, trolley, and hoist speeds, and speed controls are in accordance with ASME NOG-1. All speeds are variable. Speed controls permit precise positioning of the load.

The crane can be used for steam generator replacement. The structural design of the bridge is sufficient to support the steam generator, which is a noncritical load. A special hoist on a temporary trolley may be used for the steam generator replacement. Steam generator replacement is not intended to be accomplished with single-failure-proof equipment.

9.1.5.2.1.2 Component Descriptions

The polar crane is designed according to NUREG-0554 supplemented by ASME NOG-1. Table 9.1.5-3 lists the design characteristics of this crane. This subsection describes how the code requirements are implemented in the design of key safety-related components. Associated lifting devices and load lift points are also described.

Main Hoist Systems

The hoisting rope is wound around the drum in a single layer. If the rope becomes dislodged from its proper groove, the crane drives are automatically shut down and the brakes are set. Features are also provided to contain the drum and prevent disengagement of the gearing in the event of drum shaft or bearing failure. A control brake and two redundant holding brakes are provided.

Two separate, redundant reeving systems are used, so that a single rope failure will not result in the dropping of the load. Two wire ropes are reeved side-by-side through the upper and lower sheaves. Each cable passes through an equalizer that adjusts for unequal cable length. The equalizer is also a load transfer safety system, eliminating sudden load displacement and shock to the crane in the unlikely event of a cable break. In the event of hook overtravel to the point where the load block contacts the crane structure, the ropes cannot be cut or crushed.

The load block provides two separate load attachment points; the main hook is a two-pronged, sister hook with safety latches.

Auxiliary Hoist System

The auxiliary hoist system is similar to that of the main hoist.

Special Lifting Devices

Special lifting devices for critical and non-critical loads are designed to meet the applicable requirements of ANSI N14.6 (Reference 14). The stress design safety factors are based on the combined maximum static and dynamic loads that could be imparted to the handling device, based on the characteristics of the crane. Special lifting devices used for the handling of critical loads are listed in Table 9.1.5-2.

Lifting Devices Not Specially Designed

Slings or other lifting devices not specially designed are selected in accordance with ANSI B30.9 (Reference 15), except that the load rating is based on the combined maximum static and dynamic loads that could be imparted to the sling.

For the handling of critical loads, dual or redundant slings are used, or a sling having a load rating twice that required for a non-critical load is used and shall be constructed of metallic material (chain or wire rope) per NRC Regulatory Issue Summary 2005-25, Supplement 1 (Reference 23).

Load Lift Points

The design stress safety factors for heavy load lift points, such as lifting lugs or cask trunnions, are consistent with the safety factors used for special lifting devices. The design of lift points for critical loads is in accordance with NUREG-0612, Paragraph 5.1.6.(3).

9.1.5.2.1.3 Instrumentation Applications

Limit switches are used to initiate protective responses to:

- Hoist overtravel
- Hoist overspeed
- Hoist overload or unbalanced load
- Improper winding of hoist rope on the drum
- Bridge or trolley overtravel

Redundant limit switches are used with the main hoist and the auxiliary hoists to limit the extent of travel in both the hoisting and lowering directions. The primary protection for each hoist in each direction is a limit switch which interrupts power to the hoist motor via the control circuitry. Interruption of power to the hoist motor causes the hoist brakes to set. The hoist may be operated in the safe direction to back out of the overtravel condition.

The secondary protection for each hoist in the raising direction is a block-actuated limit switch which directly interrupts power to the hoist motor and causes the brake(s) to set. The secondary protection for each hoist in the lowering direction is a limit switch which is mechanically and electrically independent of the primary switch but also interrupts power to the hoist motor via the control circuitry. Actuation of the secondary limit switches prevents further hoisting or lowering until specific corrective action is taken.

A centrifugal-type limit switch, located on the drum shaft, provides overspeed protection for each hoist. Hoist speeds in excess of 115 percent of the rated lowering speed for a critical load cause the hoist motor to stop and the holding brakes to set.

A load-sensing system is used to detect overloading of the hoists. Hoisting motion is stopped when the overload setpoint is exceeded. Similarly, an unbalanced load is detected by a system that stops the hoist motion when there is excessive movement of the equalizer mechanism.

A level wind limit switch is provided to detect improper threading of the hoist rope in the drum grooves. This switch stops crane drive motors and sets the brakes. Further hoisting or lowering is prevented until specific corrective action is taken.

End-of-travel limit switches are provided for the trolley. These switches are set to trip just before the trolley comes into contact with the bumper, thus providing confidence that the kinetic energy of the trolley is within the energy-absorbing capacity of the bumpers.

9.1.5.2.2 Cask Handling Crane General Description

The cask handling crane is a bridge crane mounted on two runway rails supported by the auxiliary building fuel handling area east and west wall structures. The bridge consists of two welded steel box girders held together with structural end beams. The two end beams are supported by wheeled trucks that travel on top of the runway rail.

The trolley is mounted on wheeled trucks which move by tractive power over rails secured to the crane girders. The trolley provides structural support for the crane hoisting machinery. Devices are installed to preclude derailment of the bridge or trolley under seismic loading.

The hoist is electrically powered and raises and lowers loads by reeving wire rope through sheaves that are an integral part of the load block. A hook is attached to the load block.

9.1.5.2.2.1 System Operation

The cask handling crane lifts the spent fuel shipping cask from the cask transporter in the loading bay, into the fuel handling area of the auxiliary building, places the cask in the cask washdown and cask loading pits, is used to remove and replace the cask lid, and lowers the loaded cask onto the cask transporter. The crane is designed to operate in the fuel handling area environmental conditions, and is typically used only when fuel movement activities associated with refueling the reactor are not in progress.

Movements of the bridge, trolley, main, and auxiliary hoists can be controlled from a radio remote control or from a pendant suspended from the crane. Both the pendant and radio remote controls include a main power control switch. The pendant is equipped with a keylock switch that inhibits control from the radio remote control. Motion control push buttons on the radio remote control and on the pendant return to the OFF position when released.

Bridge, trolley, and hoist speeds, and speed control are in accordance with ASME NOG-1. All speeds are variable. Speed controls permit precise positioning of the load.

9.1.5.2.2.2 Component Descriptions

The cask handling crane is designed according to NUREG-0554 supplemented by ASME NOG-1. Table 9.1.5-1 lists the design characteristics of this crane. This subsection describes how the code requirements are implemented in the design of key safety-related components. Associated lifting devices and load lift points are also described.

Hoist System

The hoisting rope is wound around the drum in a single layer. If the rope becomes dislodged from its proper groove, the crane drives are automatically shut down and the brakes are set. Features are also provided to contain the drum and prevent disengagement of the gearing in the event of drum shaft or bearing failure. A control brake and two redundant holding brakes are provided.

Two separate, redundant reeving systems are used, so that a single rope failure will not result in the dropping of the load. Two wire ropes are reeved side-by-side through the sheave. Each cable passes through an equalizer that adjusts for unequal cable length. The equalizer is also a load transfer safety system, eliminating sudden load displacement and shock to the crane in the unlikely event of a cable break. Overtravel protection is provided (see subsection 9.1.5.2.2.3); however, even in the event of hook overtravel in the raising direction to the point the load block contacts the crane structure, the ropes cannot be cut or crushed.

The load block provides two separate load attachment points; the main hook is a two-pronged sister hook with safety latches.

Auxiliary Hoist System

The auxiliary hoist system is similar to that of the main hoist.

Special Lifting Devices

Special lifting devices for critical and non-critical loads are designed to meet the applicable requirements of ANSI N14.6 (Reference 14). The stress design safety factors are based on the combined maximum static and dynamic loads that could be imparted to the handling device, based on the characteristics of the crane. Special lifting devices used for the handling of critical loads are listed in Table 9.1.5-2.

Lifting Devices Not Specially Designed

Slings or other lifting devices not specially designed are selected in accordance with ANSI B30.9 (Reference 15), except that the load rating is based on the combined maximum static and dynamic loads that could be imparted to the sling.

For the handling of critical loads, dual or redundant slings are used, or a sling having a load rating twice that required for a non-critical load is used and shall be constructed of metallic material (chain or wire rope) per NRC Regulatory Issue Summary 2005-25, Supplement 1 (Reference 23).

Load Lift Points

The design stress safety factors for heavy load lift points, such as lifting lugs or cask trunnions, are consistent with the safety factors used for special lifting devices. The design of lift points for critical loads is in accordance with NUREG-0612, Paragraph 5.1.6.(3).

9.1.5.2.2.3 Instrumentation Applications

Limit switches are used to initiate protective responses to:

- Hoist overtravel.
- Hoist overspeed.
- Hoist overload or unbalance load.
- Improper winding of hoist rope on the drum.
- Bridge or trolley overspeed.
- Bridge or trolley overtravel.

Redundant limit switches are used with the main hoist and the auxiliary hoists to limit the extent of travel in both the hoisting and lowering directions. The primary protection for each hoist in each direction is a limit switch which interrupts power to the hoist motor via the control circuitry. Interruption of power to the hoist motor causes the hoist brakes to set. The hoist may be operated in the safe direction to back out of the overtravel condition.

The secondary protection for each hoist in the raising direction is a block-actuated limit switch, which is mechanically and electrically independent of the primary limit switch and interrupts power to the hoist motor and causes the brake(s) to set. The secondary protection for each hoist in the lowering direction is a limit switch, which is mechanically and electrically independent of the primary switch, but also interrupts power to the hoist motor via the control circuitry. Actuation of the secondary limit switches prevents further hoisting or lowering until specific corrective action is taken.

A centrifugal-type limit switch, located on the drum shaft, provides overspeed protection for each hoist. Hoist speeds in excess of 115 percent of the rated lowering speed for a critical load causes the hoist motor to stop and the holding brakes to set.

A load-sensing system is used to detect overloading of the hoists. Hoisting motion is stopped when the overload setpoint is exceeded. Similarly, an unbalanced load is detected by a system that stops the hoist motion when there is excessive movement of the equalizer mechanism.

A level wind limit switch is provided to detect improper threading of the hoist rope in the drum grooves. This switch stops crane drive motors and sets the brakes. Further hoisting or lowering is prevented until specific corrective action is taken.

End-of-travel limit switches are provided for the trolley. These switches are set to trip just before the trolley comes into contact with the bumper. This provides confidence that the kinetic energy of the trolley is within the energy-absorbing capacity of the bumpers.

9.1.5.3 Safety Evaluation

The design and arrangement of heavy load handling systems promotes the safe handling of heavy loads by one of the following means:

- A single-failure-proof system is provided so that a load drop is unlikely.

- The arrangement of the system in relationship to safety-related plant components is such that the consequences of a load drop are acceptable per NUREG 0612. Postulated load drops are evaluated in the heavy loads analysis.

The polar crane, the cask handling crane, the containment equipment hatch, and the maintenance hatch hoists are single failure proof. These systems stop and hold a critical load following the credible failure of a single component. Either redundancy or double design factor is provided for load bearing components such as the hoisting ropes, sheaves, equalizer assembly, hooks, and holding brakes. These systems are designed to support a critical load during and after a safe shutdown earthquake. The seismic Category I equipment and maintenance hatch hoist systems are designed to remain operational following a safe shutdown earthquake. The polar crane is designed to withstand rapid pressurization of the containment during a design basis loss of coolant accident or main steam line break, without collapsing.

The cask loading pit is separated from the spent fuel pool. The cask handling crane cannot move over the spent fuel pool because the crane rails do not extend over the pool. Mechanical stops prevent the cask handling crane from going beyond the ends of the rails.

A heavy loads analysis is performed to evaluate postulated load drops from heavy load handling systems located in safety-related areas of the plant, specifically the nuclear island. No evaluations are required for critical loads handled by the containment polar crane, the cask handling crane, the containment equipment hatch hoist, and the containment maintenance hatch hoist since a load drop is unlikely.

The heavy loads analysis is to confirm that a postulated load drop does not cause unacceptable damage to reactor fuel elements, or loss of safe shutdown or decay heat removal capability.

9.1.5.4 Inservice Inspection/Inservice Testing

Preoperational inspection and testing of overhead cranes is governed by ASME NOG-1. Tests include operational testing with 100 percent load to demonstrate function and speed controls for bridge, trolley, and hoist drives and proper functioning of limit switches, locking, and safety devices. A rated load test is performed with a 125 percent load.

Following plant startup, inservice inspection of overhead cranes is governed by site-specific procedures in accordance with ANSI B30.2. Testing of crane modifications is governed by ASME NOG-1. Inservice inspection and testing of other cranes and hoists is in accordance with manufacturer's recommendations and applicable industry standards.

In-service inspection and testing of special lifting devices and slings used in safety-related areas of the plant are in accordance with ANSI N14.6 and ANSI B30.9.

9.1.6 Combined License Information for Fuel Storage and Handling

9.1.6.1 Structural Dynamic and Stress Analysis for New Fuel Rack

The Combined License information requested in this subsection has been completely addressed in APP-GW-GLR-026 (Reference 16), and the applicable changes are incorporated into the DCD. No additional work is required by the Combined License applicant.

The following words represent the original Combined License Information Item commitment, which has been addressed as discussed above:

> The Combined License applicant is responsible for a confirmatory structural dynamic and stress analysis for the new fuel rack, as described in subsection 9.1.1.2.1.

9.1.6.2 Criticality Analysis for New Fuel Rack

The Combined License information requested in this subsection has been completely addressed in APP-GW-GLR-030 (Reference 17), and the applicable changes are incorporated into the DCD. No additional work is required by the Combined License applicant.

The following words represent the original Combined License Information Item commitment, which has been addressed as discussed above:

> The Combined License applicant is responsible for a confirmatory criticality analysis for the new fuel rack, as described in subsection 9.1.1.3. This report (Reference 17) addresses the degradation of integral neutron absorbing material in the new fuel pool storage racks as identified in GL-96-04, and assesses the integral neutron absorbing material capability to maintain a 5-percent subcriticality margin.

9.1.6.3 Structural Dynamic and Stress Analysis for Spent Fuel Racks

The Combined License information requested in this subsection has been completely addressed in APP-GW-GLR-033 (Reference 18), and APP-GW-GLR-045 (Reference 19). The applicable changes are incorporated into the DCD. No additional work is required by the Combined License applicant.

The following words represent the original Combined License Information Item commitment, which has been addressed as discussed above:

> The Combined License applicant is responsible for a confirmatory structural dynamic and stress analysis for the spent fuel racks, as described in subsection 9.1.2.2.1. This includes reconciliation of loads imposed by the spent fuel racks on the spent fuel pool structure described in subsection 3.8.4.

9.1.6.4 Criticality Analysis for Spent Fuel Racks

The Combined License information requested in this subsection has been completely addressed in APP-GW-GLR-029 (Reference 20), and the applicable changes are incorporated into the DCD. No additional work is required by the Combined License applicant.

The following words represent the original Combined License Information Item commitment, which has been addressed as discussed above:

> The Combined License applicant is responsible for a confirmatory criticality analysis for the spent fuel racks, as described in subsection 9.1.2.3. This analysis should address the degradation of integral neutron absorbing material in the spent fuel pool storage racks as identified in GL-96-04, and assess the integral neutron absorbing material capability to maintain a 5-percent subcriticality margin.

9.1.6.5 Inservice Inspection Load Handling Systems

The Combined License applicant is responsible for a program for inservice inspection of the light load handling system as specified in subsection 9.1.4.4 and the overhead heavy load handling system in accordance with ANSI B30.2, ANSI B30.9, ANSI N14.6, and ASME NOG-1 as specified in subsection 9.1.5.4.

9.1.6.6 Operating Radiation Monitor

The Combined License applicant is responsible to ensure an operating radiation monitor is mounted on any crane or fuel handling machine when it is handling fuel.

9.1.6.7 Coupon Monitoring Program

The Combined License holder will implement a spent fuel rack Metamic coupon monitoring program when the plant is placed into commercial operation. This program will include tests to monitor bubbling, blistering, cracking, or flaking; and a test to monitor for corrosion, such as weight loss measurements and or visual examination.

9.1.7 References

1. ANSI N16.1-75, Nuclear Criticality Safety in Operations with Fissionable Materials Outside Reactors.

2. ANSI N16.9-75, Validation of Calculational Methods for Nuclear Criticality Safety.

3. ANSI N210-76, Design Objectives for Light Water Reactor Spent Fuel Storage Facilities at Nuclear Power Stations.

4. ANS 57.2-1983, Design Requirements for Light Water Reactor Spent Fuel Storage Facilities at Nuclear Power Plants.

5. USNRC NUREG-0800, SRP 3.8.4, Revision 1, Appendix D, “Technical Position on Spent Fuel Pool Racks,” July 1981.

6. ANS 57.1-1992, Design Requirements for Light Water Reactor Fuel Handling Systems.

7. Specifications for Electric Overhead Travelling Cranes CMAA, Specification 70 - 2000.

8. USNRC, "Control of Heavy Loads at Nuclear Power Plants," NUREG-0612, July 1980.

9. "Overhead and Gantry Cranes," ANSI/ASME B30.2-1990.

10. Not used.

11. USNRC, "Single-Failure-Proof Cranes for Nuclear Power Plants," NUREG-0554, May 1979.

12. "Rules for Construction of Overhead and Gantry Cranes (Top Running Bridge, Multiple Girder)," ASME NOG-1-1998.

13. Not used.

14. "Special Lifting Devices for Shipping Containers Weighing 10,000 Pounds or More," ANSI N14.6-1993.

15. "Slings," ASME/ANSI B30.9-1996.

16. APP-GW-GLR-026, “New Fuel Storage Rack Structural/Seismic Analysis,” Westinghouse Electric Company LLC.

17. APP-GW-GLR-030, “New Fuel Storage Rack Criticality Analysis,” Westinghouse Electric Company LLC.

18. APP-GW-GLR-033, “Spent Fuel Storage Rack Structural/Seismic Analysis,” Westinghouse Electric Company LLC.

19. APP-GW-GLR-045, “Evaluation of Critical Structures,” Westinghouse Electric Company LLC.

20. APP-GW-GLR-029, “Spent Fuel Storage Racks Criticality Analysis,” Westinghouse Electric Company LLC.

21. USNRC, 10 CFR 50.68, “Criticality Accident Requirements,” January 2003.

22. USNRC, Regulatory Guide 1.124, Revision 1, “Service Limits and Loading Combinations for Class 1 Linear-Type Component Supports,” January 1978.

23. USNRC, Regulatory Issue Summary 2005-25, Supplement 1, “Clarification of NRC Guidelines for Control of Heavy Loads,” May 2007.

24. "Source Book for Metamic Performance Assessment," Holtec Report HI-2043215, Revision 2, Holtec International, September 2006.

25. Safety Evaluation by the Office of Nuclear Reactor Regulation Related to Holtec International Report HI-2022871 Regarding the Use of Metamic® in Fuel Pool Applications Facility Operating License NOS DPR-51 and NPF-6 Entergy Operations, Inc Arkansas Nuclear One, Unit Nos. 1 and 2 Docket Nos. 50-313.

Table 9.1-1

LOADS AND LOAD COMBINATIONS FOR FUEL RACKS

Load Combination	Service Level
$D + L$ $D + L + T_o$	Level A
$D + L + T_a$ $D + L + T_o + P_f$	Level B
$D + L + T_a + E'$	Level D
$D + L + F_d$	The functional capability of the fuel racks should be demonstrated.

Notes:

1. There is no operating basis earthquake (OBE) for the AP1000 plant.
2. The fuel racks are freestanding; thus, there is minimal or no restraint against free thermal expansion at the base of the rack. As a result, thermal loads applied to the rack (T_o and T_a) produce only local (secondary) stresses.

Abbreviations are those used in NUREG-0800, Section 3.8.4 (including Appendix D) of the Standard Review Plan (SRP):

D = Dead weight induced loads (including fuel assembly weight)
L = Live load (not applicable to fuel racks since there are no moving objects in the rack load path)
F_d Force caused by the accidental drop of the heaviest load from the maximum possible height
P_f = Upward force on the racks caused by postulated stuck fuel assembly
E' = Safe shutdown earthquake (SSE)
T_o = Differential temperature induced loads based on the most critical transient or steady-state condition under normal operation or shutdown conditions
T_a = Differential temperature induced loads based on the postulated abnormal design conditions

Table 9.1-2

SPENT FUEL POOL COOLING AND PURIFICATION SYSTEM DESIGN PARAMETERS

Spent fuel pool storage capacity	889 total fuel assemblies
Spent fuel pool water volume (including racks without fuel at water level of 15 inches below the operating deck) (gallons)	190,500
Fuel transfer canal, including gate, water volume (gallons)	63,500
Minimum combined volume of spent fuel pool and fuel transfer canal above fuel to elevation 6 feet below the operating deck) (gallons)	129,500
Minimum volume of the cask washdown pit (gallons)	30,900
Nominal boron concentration of water (ppm)	2,700
Maximum normal refueling case (full core offload) Water temperature with one spent fuel cooling system cooling train and one normal residual heat removal system cooling train in operation (°F)	<140
Maximum emergency core unload case Water temperature with both spent fuel cooling system cooling trains and one normal residual heat removal system cooling train in operation (°F)	<140

Table 9.1-3 (Sheet 1 of 2)

COMPONENT DATA –
SPENT FUEL POOL COOLING AND PURIFICATION SYSTEM

Spent Fuel Pool Pump		
Number		2
Design pressure (psig)		150
Design temperature (°F)		250
Nominal flow (gallons/minute)		1200
Minimum flow to support normal cooling (gpm)		900
Material		Stainless Steel
Spent Fuel Pool Heat Exchangers		
Number		2
Type		Plate
Design heat transfer (Btu/hour)		14.75×10^6
Design capacity (Btu/hour-°F)		24.0×10^5
Minimum capacity to support normal cooling (Btu/hour-°F)		22.0×10^5
	Side 1	**Side 2**
Design pressure (psig)	150	150
Design temperature (°F)	250	250
Nominal flow (pounds/hour)	6.23×10^5	5.94×10^5
Inlet temperature (°F), typ.	89.5	120
Outlet temperature (°F), typ.	113.3	95.1
Fluid circulated	Component cooling water	Spent fuel pool water
Material	Stainless steel	Stainless steel
Spent Fuel Pool Demineralizers		
Number		2
Design pressure (psig)		150
Design temperature (°F)		200
Nominal flow (gallons/minute)		250
Nominal resin volume (cubic feet)		75
Material		Stainless steel

Table 9.1-3 (Sheet 2 of 2)

COMPONENT DATA –
SPENT FUEL POOL COOLING AND PURIFICATION SYSTEM

Spent Fuel Pool Filter	
Number	2
Design pressure (psig)	150
Design temperature (°F)	250
Nominal flow (gallons/minute)	250
Filtration requirement	98% retention of particles above 5 µm
Material, vessel	Stainless steel

Table 9.1-4

STATION BLACKOUT/SEISMIC EVENT TIMES[1]

Event	Time to Saturation[1] (hours)	Height of Water Above Fuel at 72 Hours[4] (feet)	Height of Water Above Fuel at 7 Days[4] (feet)
Seismic Event[2] – Power Operation Immediately Following a Refueling[7]	6.50	1.6[6]	1.6[6]
Seismic Event[8] – Refueling, Immediately Following Spent Fuel Region Offload[3][7]	4.68	8.3[5]	8.3[5]
Seismic Event[8] – Refueling, Emergency Full Core Off-Load[3] Immediately Following Refueling[7]	1.37	8.3[5]	8.3[6]

Notes:

1. Times calculated neglect heat losses to the passive heat sinks in the fuel area of the auxiliary building.
2. Seismic event assumes water in the pool is initially drained to the level of the spent fuel pool cooling system connection simultaneous with a station blackout. Fuel cooling water sources are spent fuel pool, fuel transfer canal (including gate), and cask washdown pit for 72 hours. Between 72 hours and 7 days fuel cooling water provided from passive containment cooling system ancillary water storage tank.
3. Fuel movement complete, 150 hours after shutdown.
4. See subsection 9.1.3.5 for minimum water level.
5. Alignment of PCS water storage for supply of makeup water permits maintaining pool level at this elevation. Decay heat in reactor vessel is less that 9 MW, thus no PCS water is required for containment cooling.
6. Alignment of the PCS ancillary water storage tank and initiation of PCS recirculation pumps provide a makeup water supply to maintain this pool level or higher above the top of the fuel.
7. The number of fuel assemblies refueled has been conservatively established to include the worst case between an 18-month fuel cycle plus 5 defective fuel assemblies (69 total assemblies or 44% of the core) and a 24-month fuel cycle plus 5 defective fuel assemblies (77 total assemblies or 49% of the core).
8. Seismic event assumes water in the pool is initially drained to the level of the spent fuel pool cooling system connection simultaneous with a station blackout. Fuel cooling water sources are spent fuel pool, fuel transfer canal (including gate), cask washdown pit, and passive containment cooling system water storage tank for 7 days.

Table 9.1-5

NUCLEAR ISLAND HEAVY LOAD HANDLING SYSTEMS[1]

Name	Crane/Hoist Type	Location (Building)	Maximum Load Rating (tons)
Containment Polar Crane	Overhead bridge	Containment	300[2]
Equipment Hatch Hoist	Fixed hoist	Containment	10
Maintenance Hatch Hoist	Fixed hoist	Containment	10
Cask Handling Crane	Overhead bridge	Auxiliary	150
MSIV Monorails Hoist A	Monorail hoists	Auxiliary	2
MSIV Monorails Hoist B	Monorail hoists	Auxiliary	2

Notes:
1. Nuclear island elevators are discussed in the heavy loads analysis.
2. Trolley maximum load rating for a critical load.

Table 9.1.5-1

CASK HANDLING CRANE COMPONENT DATA

Bridge	
Bridge span	61.75 ft
Travel speed	See Note 1.
Service/parking/emergency braking system (type and number)	Friction (one) for all three functions
Trolley	
Travel speed	See Note 1.
Service/parking/emergency braking system (type and number)	Friction (one) for all three functions
Main Hoist	
Approximate capacity	See Table 9.1-5.
Hook speed	See Note 1.
Approximate hook travel (elevation)	To cask transport in loading bay (at grade elevation)
Main hoist braking system (diverse systems)	
Control brakes (type and number)	Electric (one)
Holding brakes (type and number)	Friction (one)
Emergency drum brake (type and number)	Friction (one)
Auxiliary Hoist	
Approximate capacity	10 tons
Hook speed	See Note 1
Approximate hook travel (elevation)	To cask transport in loading bay (at grade elevation)
Auxiliary hoist braking system (diverse systems)	
Control brakes (type and number)	Electric (one)
Holding brakes (type and number)	Friction (one)
Emergency drum brake (type and number)	Friction (one)

Note:

1. Bridge, trolley, and hoist speeds are within the recommended ranges of ASME NOG-1.

Table 9.1.5-2

SPECIAL LIFTING DEVICES USED FOR THE HANDLING OF CRITICAL LOADS

Polar Crane Special Lifting Devices	Description
Integrated head package (IHP)	The IHP combines several separate components into an integral unit. It incorporates the lifting device that provides the interface between the polar crane and the reactor vessel head.
Reactor internals lifting rig	The reactor internals lifting rig is a three-legged carbon steel and stainless steel structure that is attached to the main hook for handling of the upper and lower reactor internals packages.
Reactor coolant pump (RCP)	The RCP handling machine is used for removal of the RCP motor and hydraulic elements from the pump casing. The pump/motor shell includes lifting lugs which are attached to a lifting device to allow the RCP motor and hydraulic elements to be handled by the polar crane main hook.
Cask Handling Crane Special Lifting Devices	**Description**
Cask lift yoke, cask lift yoke extension, and loaded canister handling equipment	These devices are used for the handling of the casks and loaded canisters, which provide the interface between the cask handling crane and the shipping cask or loaded canister.

Table 9.1.5-3

POLAR CRANE COMPONENT DATA

Bridge	
Bridge span	See Figure 1.2-12
Travel speed	See Note 1
Service/parking/emergency braking system (type and number)	Friction (one) for all three functions
Trolley	
Travel speed	See Note 1
Service/parking/emergency braking system (type and number)	Friction (one) for all three functions
Main Hoist	
Approximate capacity	See Table 9.1-5
Hook speed	See Note 1
Approximate hook travel (elevation)	To reactor vessel internals
Main hoist braking system (diverse systems)	
Control brakes (type and number)	Electric (one)
Holding brakes (type and number)	Friction (one)
Emergency drum brake (type and number)	Friction (one)
Auxiliary Hoist	
Approximate capacity	25 tons
Hook speed	See Note 1
Approximate hook travel (elevation)	To reactor coolant pump
Auxiliary hoist braking system (diverse systems)	
Control brakes (type and number)	Electric (one)
Holding brakes (type and number)	Friction (one)
Emergency drum brake (type and number)	Friction (one)

Note:

1. Bridge, trolley and hoist speeds are within the recommended ranges of ASME NOG-1.

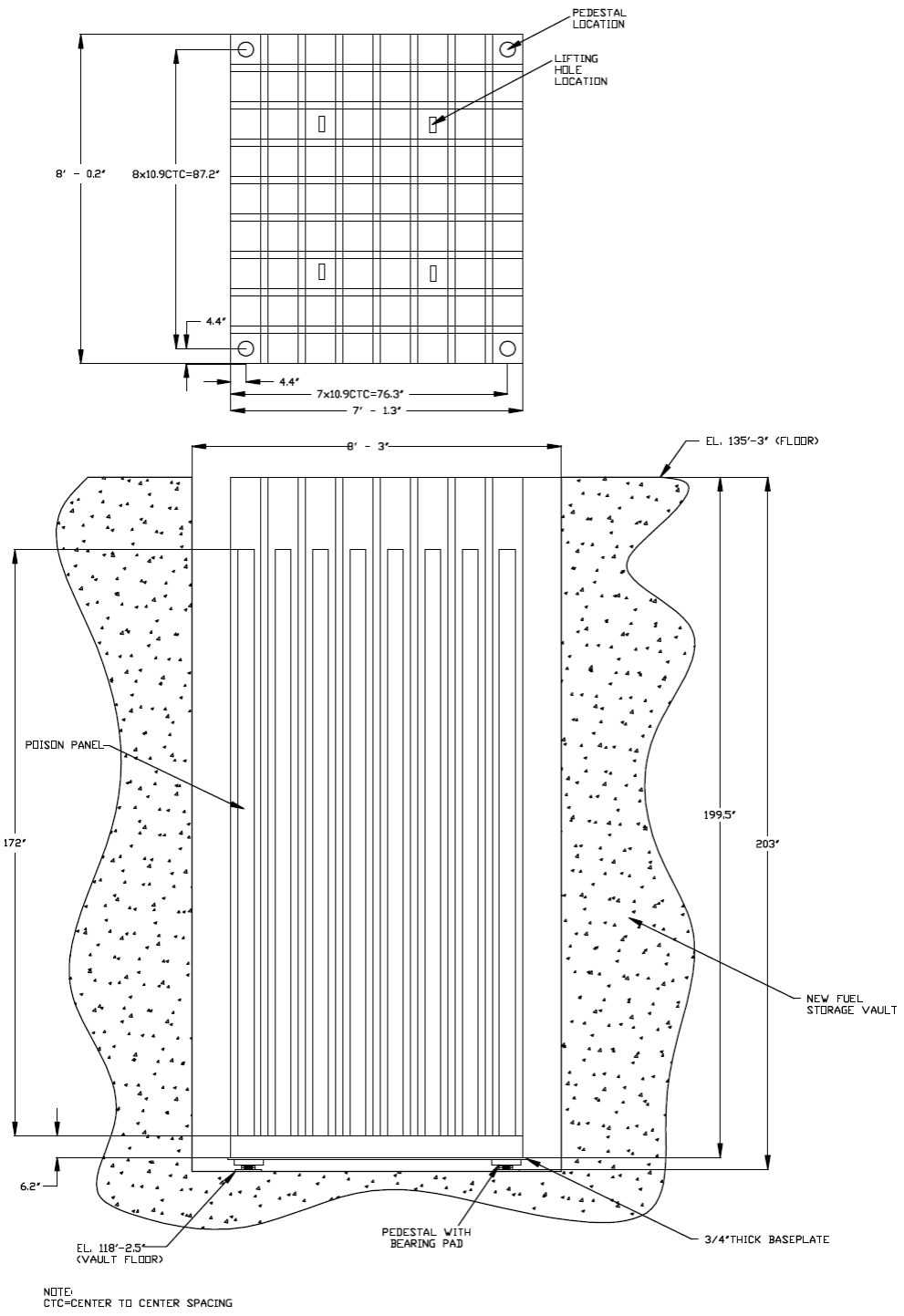

Figure 9.1-1 (Sheet 1 of 2)

New Fuel Storage Rack Layout (72 Storage Location)

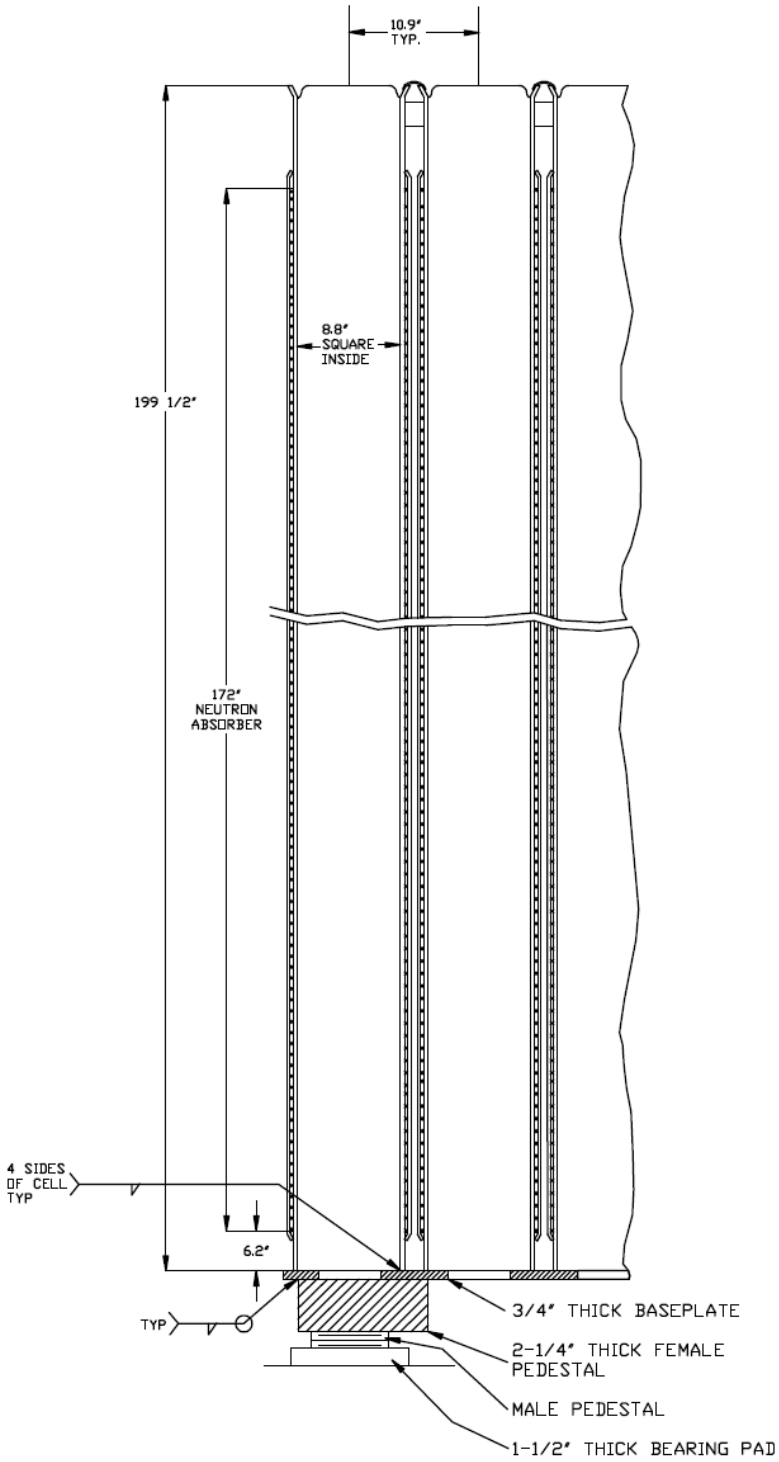

Figure 9.1-1 (Sheet 2 of 2)

New Fuel Storage Rack Cross Section

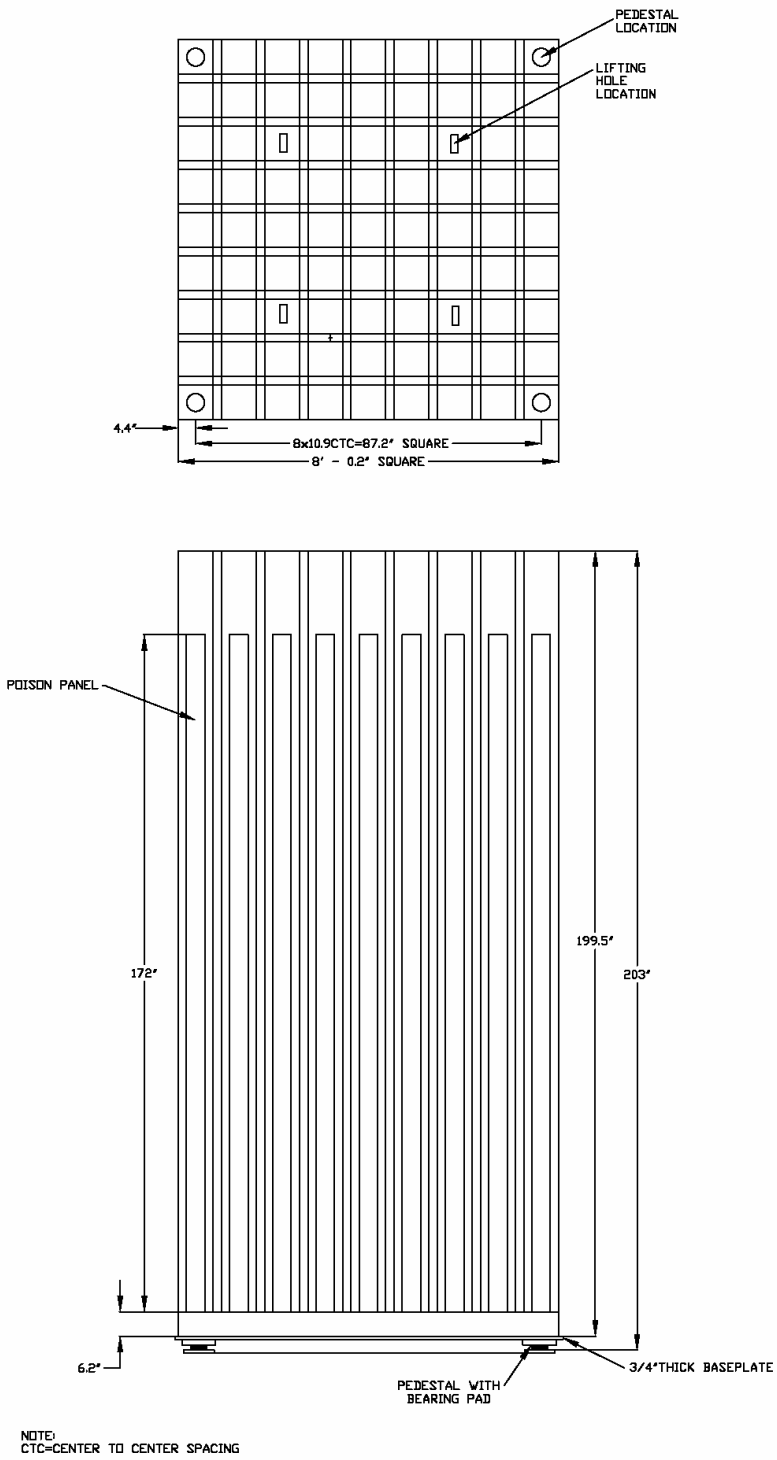

Figure 9.1-2 (Sheet 1 of 2)

Region 1 Spent Fuel Storage Rack Layout

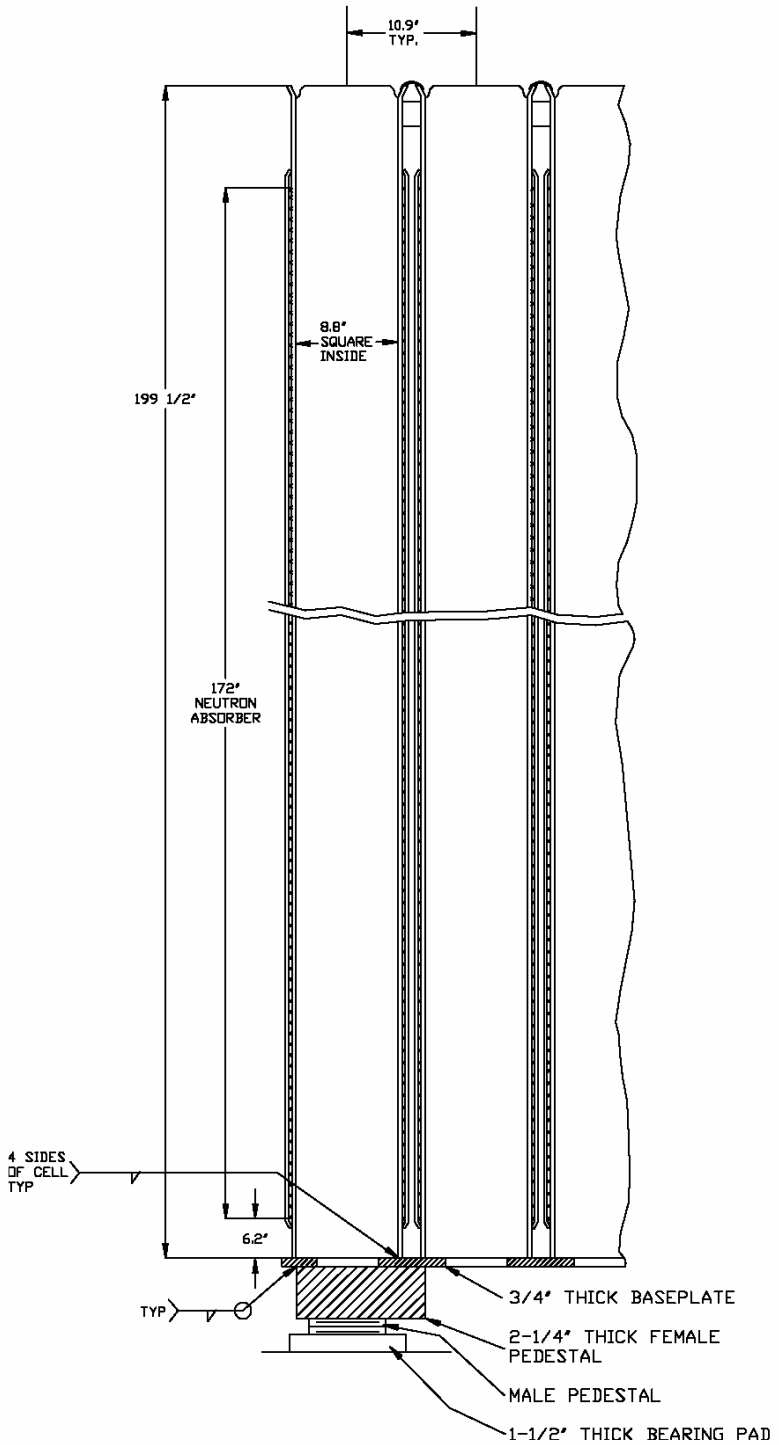

Figure 9.1-2 (Sheet 2 of 2)

Region 1 Spent Fuel Storage Rack Cross Section

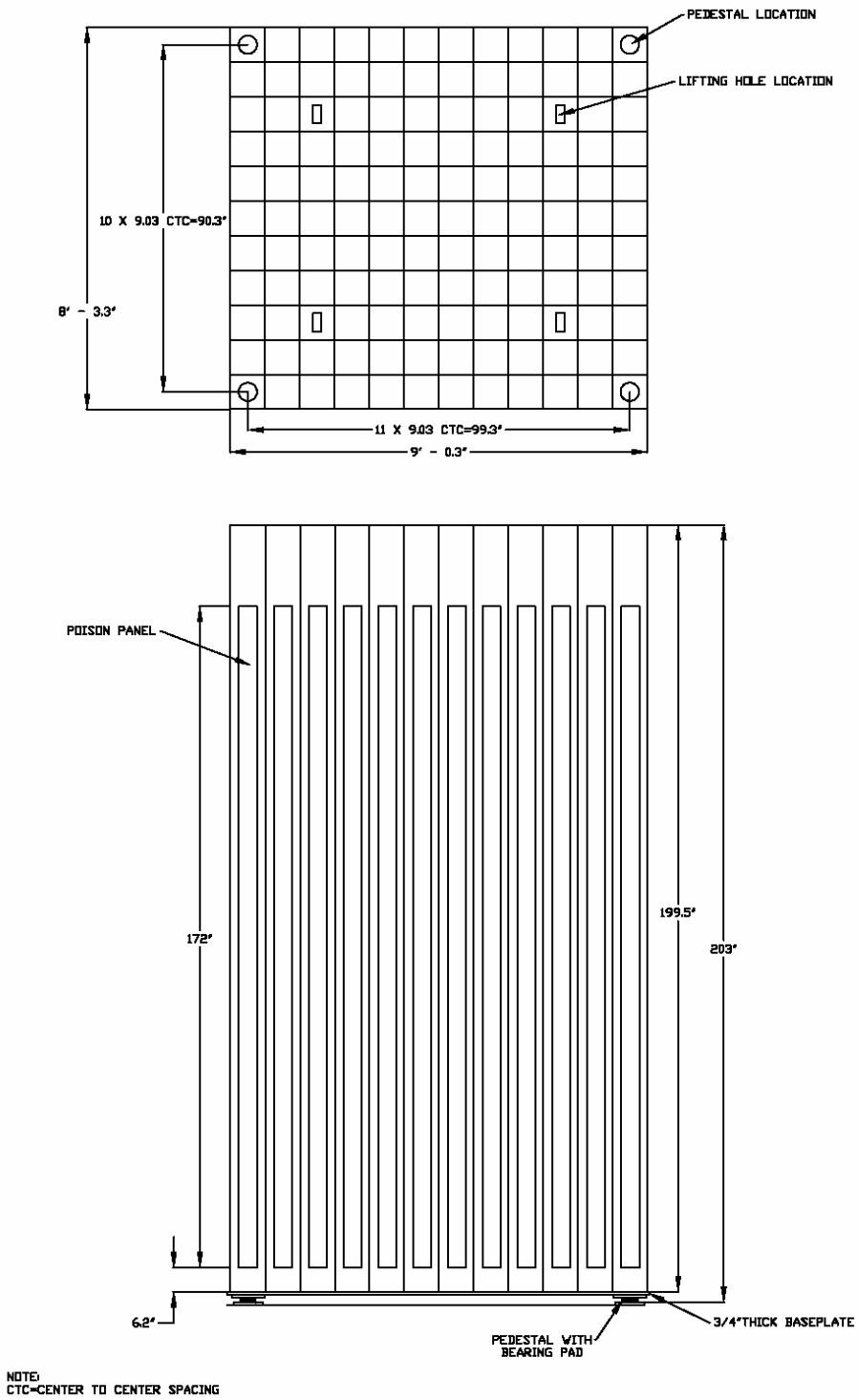

Figure 9.1-3 (Sheet 1 of 2)

Region 2 Spent Fuel Storage Rack Layout

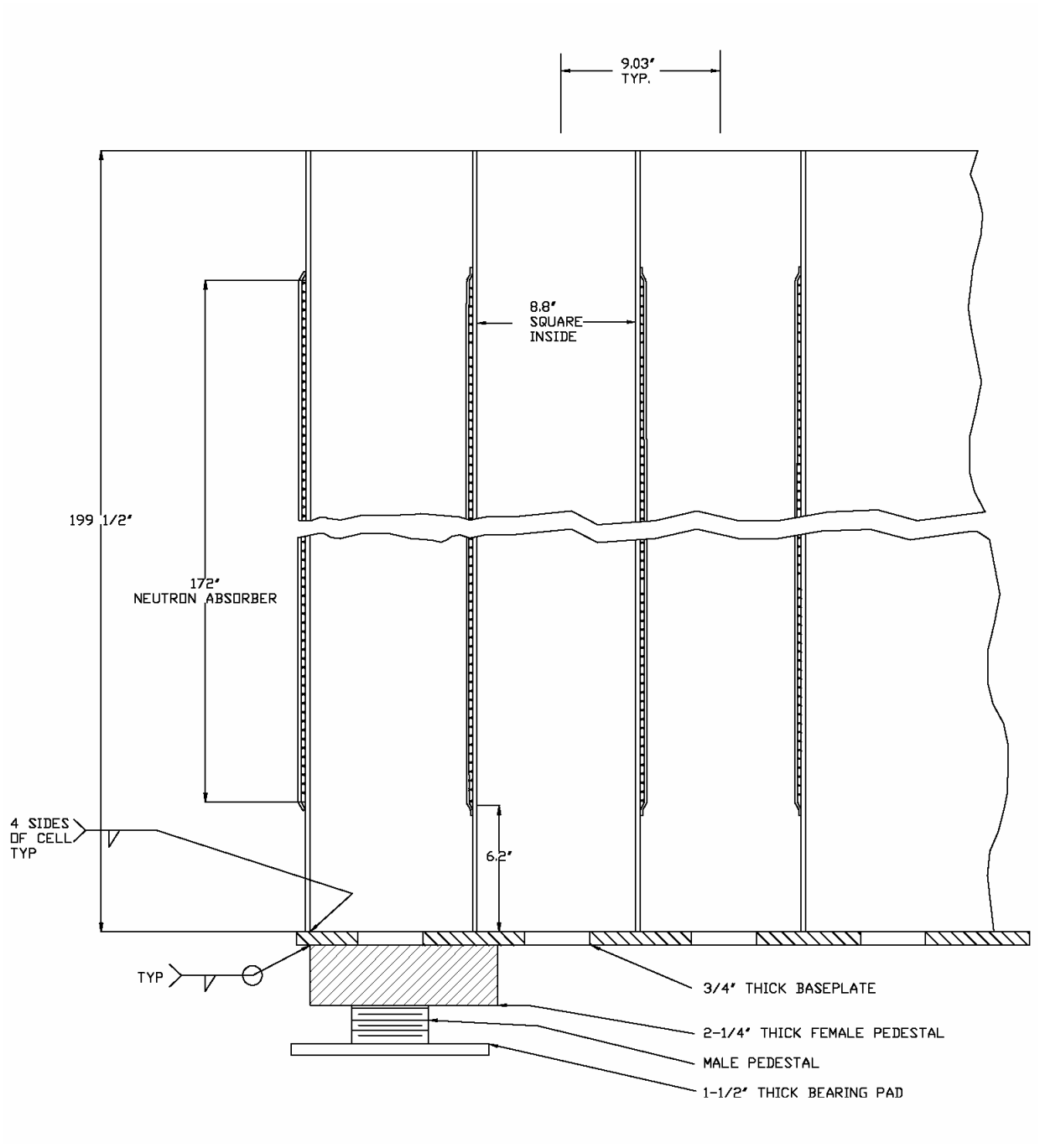

Figure 9.1-3 (Sheet 2 of 2)

Region 2 Spent Fuel Storage Rack Cross Section

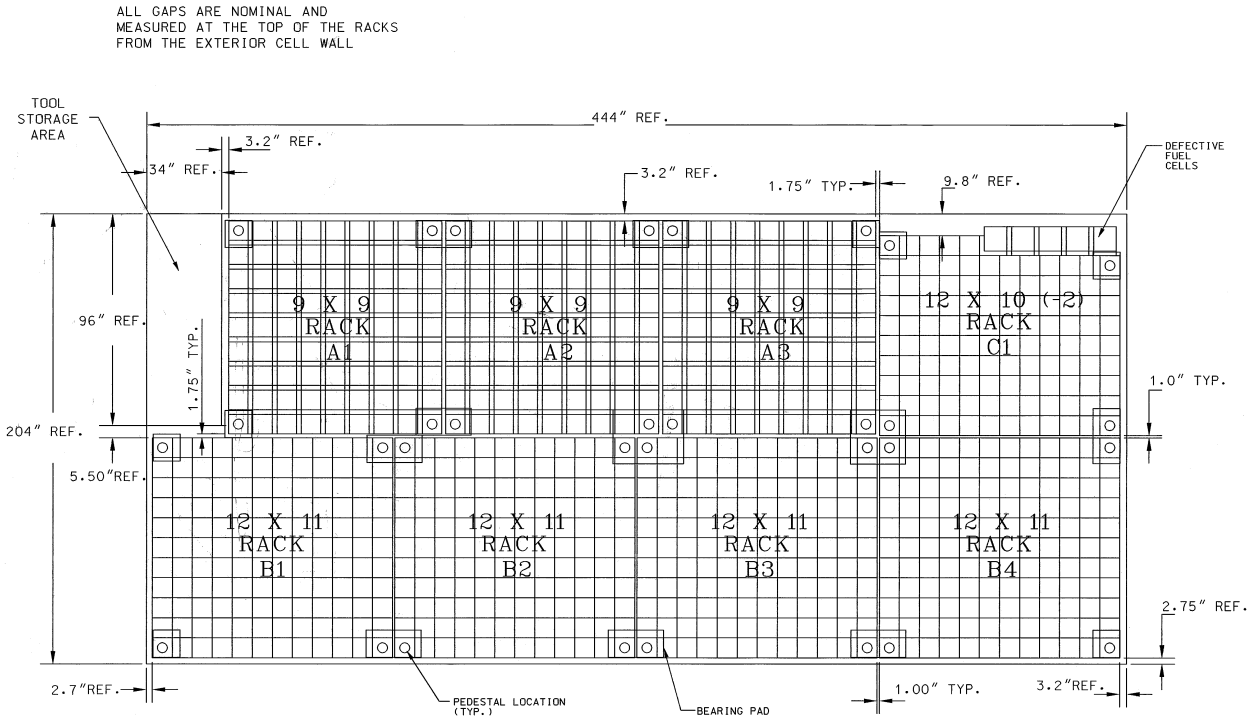

Figure 9.1-4

Spent Fuel Storage Pool Layout (889 Storage Locations)

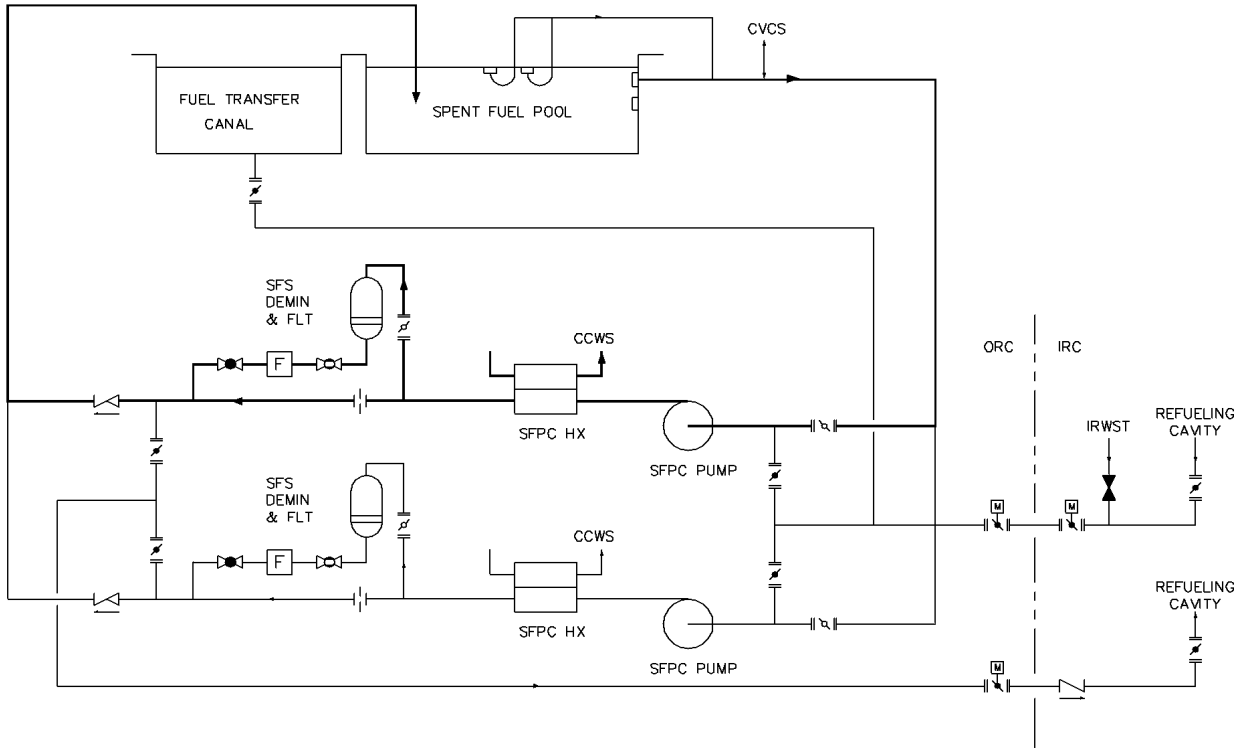

Figure 9.1-5

Spent Fuel Pool Cooling System (Normal Operation)

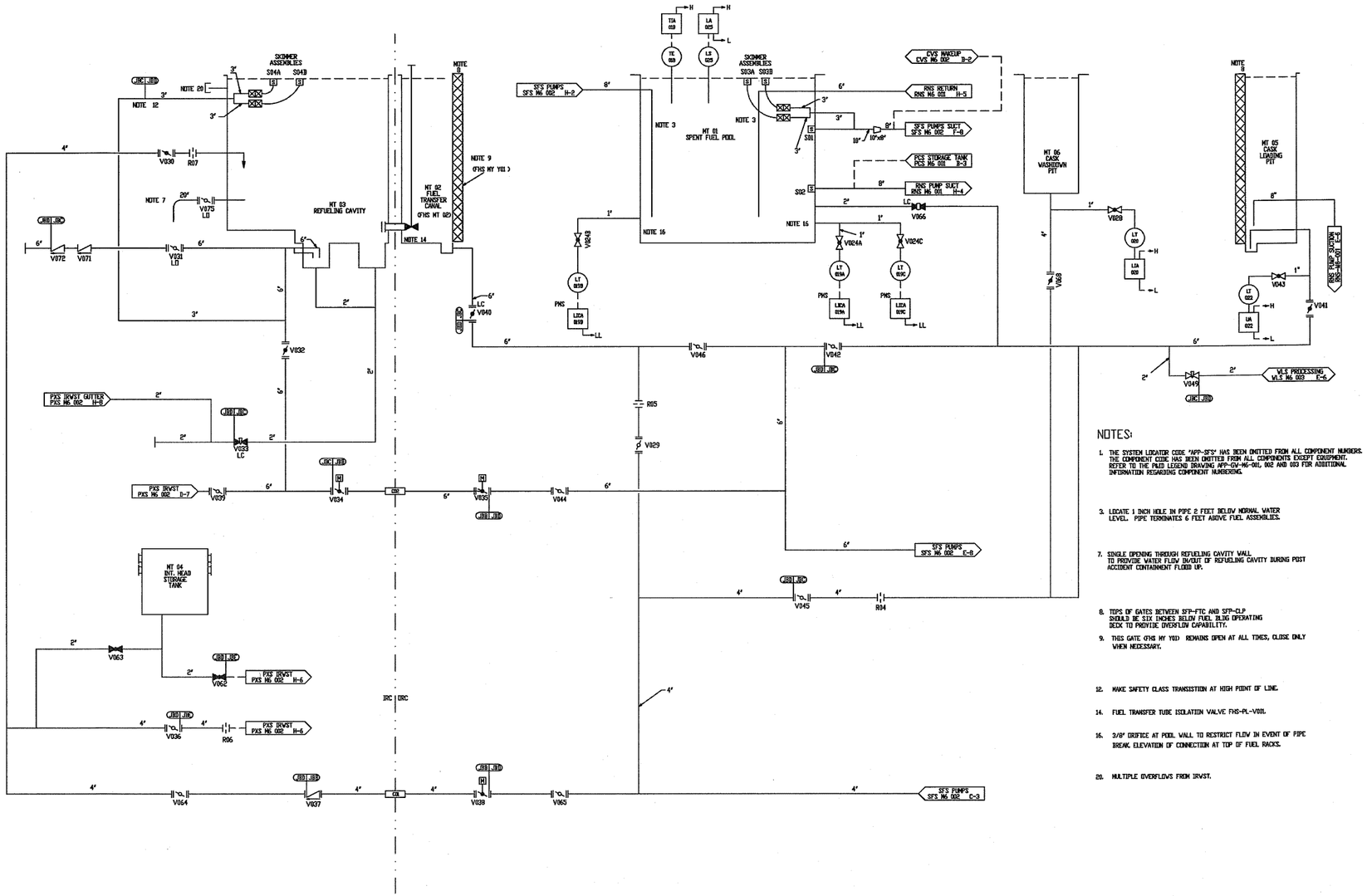

NOTES:

1. THE SYSTEM LOCATOR CODE 'APP-SFS' HAS BEEN OMITTED FROM ALL COMPONENT NUMBERS. THE COMPONENT CODE HAS BEEN OMITTED FROM ALL COMPONENTS EXCEPT EQUIPMENT. REFER TO THE PAID LEGEND DRAWING APP-GW-M6-001, 002 AND 003 FOR ADDITIONAL INFORMATION REGARDING COMPONENT NUMBERING.

3. LOCATE 1 INCH HOLE IN PIPE 2 FEET BELOW NORMAL WATER LEVEL. PIPE TERMINATES 6 FEET ABOVE FUEL ASSEMBLIES.

7. SINGLE OPENING THROUGH REFUELING CAVITY WALL TO PROVIDE WATER FLOW IN/OUT OF REFUELING CAVITY DURING POST ACCIDENT CONTAINMENT FLOOD UP.

8. TOPS OF GATES BETWEEN SFP-FTC AND SFP-CLP SHOULD BE SIX INCHES BELOW FUEL PLUG OPERATING DECK TO PROVIDE OVERFLOW CAPABILITY.

9. THIS GATE (FHS MY 901) REMAINS OPEN AT ALL TIMES, CLOSE ONLY WHEN NECESSARY.

12. MAKE SAFETY CLASS TRANSISTION AT HIGH POINT OF LINE.

14. FUEL TRANSFER TUBE ISOLATION VALVE FHS-PL-V001.

16. 3/8" ORIFICE AT POOL WALL TO RESTRICT FLOW IN EVENT OF PIPE BREAK. ELEVATION OF CONNECTION AT TOP OF FUEL RACKS.

20. MULTIPLE OVERFLOWS FROM IRVST.

Figure 9.1-6 (Sheet 1 of 2)

Spent Fuel Pool Cooling System
Piping and Instrumentation Diagram

(REF) SFS 001

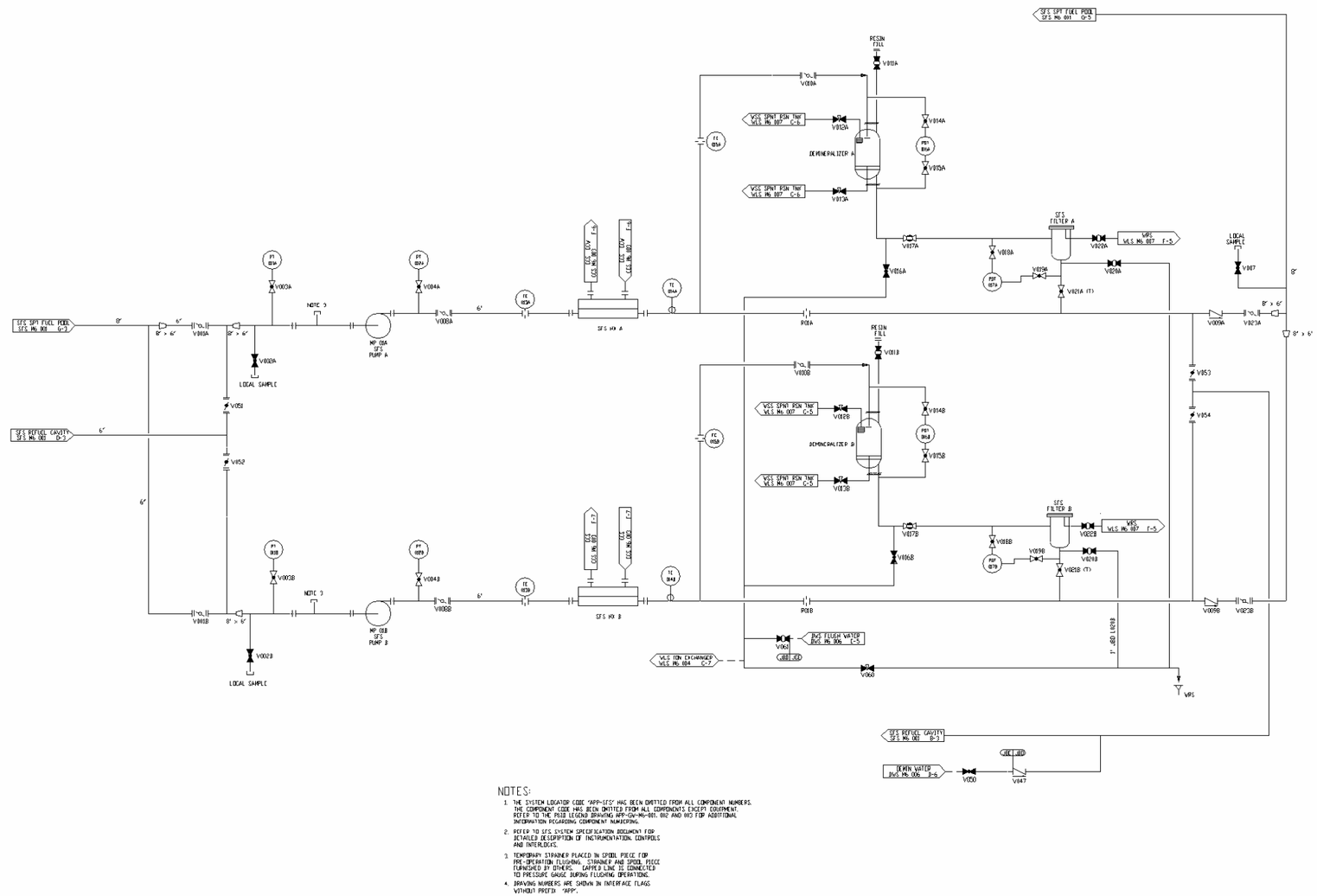

Figure 9.1-6 (Sheet 2 of 2)

Spent Fuel Pool Cooling System
Piping and Instrumentation Diagram

(REF) SFS 002