APPENDIX 3H AUXILIARY AND SHIELD BUILDING CRITICAL SECTIONS

3H.1 Introduction

[*This appendix summarizes the structural design and analysis of structures identified as "Critical Sections" in the auxiliary and shield buildings. The design summaries include the following information:*

- *Description of buildings*
- *Governing codes and regulations*
- *Structural loads and load combinations*
- *Global analyses*
- *Structural design of critical structural elements*

Subsections 3H.2 through 3H.4 include a general description of the auxiliary building, a summary of the design criteria and the global analyses. Examples of the structural design are shown for twelve critical sections which are identified in subsection 3H.5 and shown in Figures 3H.5-1 (3 sheets). Representative design details are provided for these structures in subsection 3H.5.]*

3H.2 Description of Auxiliary Building

[*The auxiliary and shield buildings are reinforced concrete structures. The auxiliary building is one of the three buildings that make up the nuclear island and shares a common basemat with the containment building and the shield building. The auxiliary building general layout is shown in Figure 3H.2-1. It is a C-shaped section of the nuclear island that wraps around approximately half of the circumference of the shield building. The building dimensions are shown on key structural dimension drawings, Figure 3.7.2-12.*

The auxiliary building is divided into six areas, which are identified in Figure 3H.2-1. It is a 5-story building; three stories are located above grade and two are located below grade. Areas 1 and 2 (Figure 3H.2-1) have five floors, including two floors below grade level. The lowest floor at elevation 66'-6" is used exclusively for housing battery racks. The next higher floor, at elevation 82'-6", also has battery racks and some electrical equipment. The floor at the grade level, elevation 100'-0", has electrical penetration areas, a remote shutdown workstation room, and some Division A and Division C equipment. The main control room is situated on the floor at elevation 117'-6", which also has rooms for the main steam and feedwater lines. The floor at elevation 135'-3" carries air filtration and air handling units, chiller pumps, and other mechanical and electrical equipment. The roof for areas 1 and 2 is at elevation 153'-0".

Areas 3 and 4 of the auxiliary building are the areas east of the containment shield building. Valve and piping areas, and some mechanical equipment, are located in the basement floor at elevation 66'-6". The floor at elevation 82'-6" has a piping penetration area, a radiation chemistry laboratory, makeup pumps, and other mechanical equipment. The floor at grade level elevation 100'-0" has an electrical penetration room, a staging area for the equipment hatch, and the access opening to the annex building. The electrical penetration area, trip switchgears, and motor control centers occupy most of the floor at elevation 117'-6". The floor at elevation 135'-3"

*NRC Staff approval is required prior to implementing a change in this information; see DCD Introduction Section 3.5.

is used for the storage of main control room air cylinders and provides access to the annex building. The roof for these areas is at elevation 160'-6".

Areas 5 and 6 include facilities for storage and handling of new and spent fuel. The spent fuel pool, fuel transfer canal, and cask loading and cask washdown pits have concrete walls and floors. They are lined on the inside surface with stainless steel plate for leak prevention. The walls and major floors are constructed using concrete filled steel plate modules. The new fuel storage area is a separate reinforced concrete pit providing temporary dry storage for the new fuel assemblies. A 150-ton cask handling crane travels in the east-west direction. The location and travel of this crane prevents the crane from carrying loads over the spent fuel pool to preclude them from falling into the spent fuel pool. Mechanical equipment is also located in this area for spent fuel cooling, residual heat removal, and liquid waste processing. This equipment is generally nonsafety-related.

The shield building forms area 7 of the auxiliary building. This appendix describes critical sections in the shield building roof and its connection to the cylindrical wall.]*

3H.3 Design Criteria

[*The auxiliary and shield building structures are reinforced concrete structures, structural modules, and horizontal concrete slabs supported by composite structural steel framing.*

- *Seismic forces are obtained from the equivalent static analysis of the three-dimensional finite element analysis models as described in subsection 3H.4. The shear wall and floor slab design also considers out-of-plane bending and shear forces due to loading, such as live load, dead load, seismic, lateral earth pressure, hydrostatic, hydrodynamic, and wind pressure.*

- *The shield building roof and the passive containment cooling water storage tank are analyzed using three-dimensional finite element models with the ANSYS and GTSTRUDL computer codes]** as described in subsection 3.8.4.4.1. *[Loads and load combinations include construction, dead, live, thermal, wind, and seismic. Seismic loads are applied as equivalent static accelerations. The seismic response of the water in the tank is analyzed in a separate finite element response spectrum analysis with seismic input defined by the floor response spectrum.*

- *The structural steel framing is used primarily to support the concrete slabs and roofs. Metal decking, supported by the steel framing, is used as form work for the concrete slabs and roofs.*

- *The finned floors for the main control room and the instrumentation and control room ceilings are designed as reinforced concrete slabs in accordance with American Concrete Institute standard ACI 349. The steel panels are designed and constructed in accordance with American Institute of Steel Construction Standard AISC N690. For positive bending, the steel plate is in tension and the steel plate with fin stiffeners serves as the bottom reinforcement. For negative bending, compression is resisted by the stiffened plate and tension by top reinforcement in the concrete.*]*

*NRC Staff approval is required prior to implementing a change in this information; see DCD Introduction Section 3.5.

3H.3.1 Governing Codes and Standards

[*The primary codes and standards used in the design of the auxiliary and shield buildings are listed below:*

- *ACI 349-01, "Code Requirement for Nuclear Safety-Related Structure Steel" (refer to subsection 3.8.4.5 for supplementary requirements)*
- *ANSI/AISC N690-1994, "Specification for the Design, Fabrication and Erection of Safety-Related Steel Structures for Nuclear Facilities" (refer to subsection 3.8.4.5 for supplemental requirements).*]*

3H.3.2 Seismic Input

The SSE design response spectra are given in Figures 3.7.1-1 and 3.7.1-2. [*They are based on the Regulatory Guide 1.60 response spectra anchored to 0.30g, but are amplified at 25 Hertz to reflect larger high-frequency seismic energy content observed for eastern United States sites.*]* The nuclear island seismic analyses are summarized in section 3.7.2.

3H.3.3 Loads

[*The auxiliary and shield buildings are seismic Category I structures. The loads listed in the following subsections are used for the design of the building structures. All the listed loads are not necessarily applicable to all structures and their elements. Loads for which each structural element is designed are based on the conditions to which that particular structural element is potentially subjected.*]*

Dead Load (D):

[*The weight of all permanent construction and installations, including fixed equipment, is included as the dead load during its normal operating condition.*

The weight of minor equipment (not specifically included in the dead load), piping, cables and cable trays, ducts, and their supports was included as equivalent dead load (EDL). A minimum of 50 pounds per square foot (psf) was used as EDL. For floors with a significant number of small pieces of equipment, the total weight of miscellaneous small pieces of equipment, divided by the floor area of the room plus an additional 50 psf was used as the equivalent dead load.]*

Earth Pressure (H):

[*The static earth pressure acting on the structures during normal operation is considered in the design of exterior walls. The dynamic soil pressure, induced during a safe shutdown earthquake (SSE), is included as a seismic load.*]*

*NRC Staff approval is required prior to implementing a change in this information; see DCD Introduction Section 3.5.

Live Loads (L):

[*The load imposed by the use and occupancy of the building is included as the live load. Live loads include floor area loads, laydown loads, fuel transfer casks, equipment handling loads, trucks, railroad vehicles, and similar items. The floor area live load is not applied on areas occupied by equipment whose weight is specifically included in the dead load. Live load is applicable on areas under equipment where access is provided, for instance, the floor under an elevated tank supported on legs.*

Floor loading diagrams are prepared for areas for component laydown. The diagrams show the location of major pieces of equipment and their foot-print loads or equivalent uniformly distributed loads.

The following live load items are considered in design:

A. Building floor loads

The following minimum values for live loads are used.

– *Structural platforms and gratings*	*100 psf*
– *Ground floors*	*250 psf*
– *All other elevated floors*	*200 psf (This load is reduced if the equivalent dead load for the floor is more than 50 psf. The sum of the live load and the equivalent dead load is 250 psf.)*

B. Roof loads

The roof is designed for a uniform snow load of 63 psf calculated in accordance with ASCE 7-98. This corresponds to ground snow load of 75 psf, exposure factor of 1.0, thermal factor of 1.0, and an importance factor of 1.2.

C. Concentrated loads for the design of local members

– *Concentrated load on beams and girders (in load combinations that do not include seismic load)*	*5,000 pounds so applied as to maximize moment or shear. This load is not carried to columns or walls. It is not applied in areas where no heavy equipment will be located or transported, such as the access control areas.*
– *Concentrated load on slabs (considered with dead load only)*	*5,000 pounds so applied as to maximize moment or shear. This load is not carried to columns or walls. It is not applied in access control areas.*

In design reconciliation analysis, if actual loads are established to be lower than the above loads, the actual loads are used for reconciliation.

D. Temporary exterior wall surcharge

When applicable, a minimum surcharge outside and adjacent to subsurface wall of 250 psf is applied.

E. Construction loads

The additional construction loads produced by cranes, trucks, and the like, with their pickup loads, are considered. For steel beams supporting concrete floors, the weight of the wet concrete plus 100 psf uniform load and 5,000 pounds concentrated load, distributed near points of maximum shear and moment, is applied. A one-third increase in allowable stress is permitted.

Metal decking and precast concrete panels, used as formwork for concrete floors are designed for the wet weight of the concrete plus a construction live load of 20 psf uniform or 150 pounds concentrated. The deflection during normal operation is limited to span in inches divided by 180, or 0.75 inch, whichever is less.

F. Crane loads

The impact allowance for traveling crane supports and runway horizontal forces is in accordance with AISC N690.

G. Elevator loads

The impact allowance used for the elevator supports is 100 percent, applied to design capacity and weight of car plus appurtenances, unless otherwise specified by the equipment supplier.

H. Equipment laydown and major maintenance

Floors are designed for planned refueling and maintenance activities as defined on equipment laydown drawings.]*

Wind Load

[*The wind loads are as follows:*

- *Design wind (W)*

  For the design of the exterior walls, wind loads are applied in accordance with ASCE 7-98 with a basic wind speed of 145 mph. The importance factor is 1.15, and the exposure category is C. Wind loads are not combined with seismic loads.

*NRC Staff approval is required prior to implementing a change in this information; see DCD Introduction Section 3.5.

- *Tornado load (W_t)*

  The exterior walls of the auxiliary and shield buildings are designed for tornado. A maximum wind speed of 300 mph (maximum rotational speed: 240 mph, maximum translational speed: 60 mph) is used to design the structures.]*

Seismic Loads (E_s)

[*The SSE (E_s) is used for evaluation of the structures of the auxiliary and shield buildings. E_s is defined as the loads generated by the SSE specified for the plant, including the associated hydrodynamic loads and dynamic incremental soil pressure.*]*

Operating Thermal Loads (T_o)

[*Normal thermal loads for the exterior walls and roofs are addressed in the design. These correspond to positive and negative linear temperature gradients with the inside surface at an average 70°F and the outside air temperature at -40°F and +115°F, respectively. These loads are considered for the seismic Category I structures in combination with the SSE also. All exterior walls of the nuclear island above grade are designed for these thermal loads even if the exterior surface is protected by an adjacent building. The thermal gradient is also applied to the portion of the shield building between the upper annulus and the auxiliary building.*

Normal thermal loads for the passive containment cooling system (PCS) tank design are calculated based on the outside air temperature extremes specified for the safety-related design. With the water temperature in the tank assumed at +40°F, the positive and negative temperature gradients are determined for the outside surface at -40°F and +115°F respectively.

Normal thermal loads due to a thermal gradient in the structures below the grade level (exterior walls and basemat) are small and are not considered in the design.]*

Effects of Pipe Rupture (Y)

[*The evaluations consider the following loads:*

- *Accident design pressure load, P_a, within or across a compartment and/or building generated by the postulated pipe rupture, including the dynamic effects due to the pressure time history.*

  Main steam isolation valve (MSIV) and steam generator blowdown valve compartments are designed for a pressurization load of 6 pounds per square inch (psi).

- *Accident thermal loads, T_a, due to thermal conditions generated by the postulated pipe break and including T_o.*

Temperature gradients are based on an exterior air temperature of -40°F.

*NRC Staff approval is required prior to implementing a change in this information; see DCD Introduction Section 3.5.

The structural integrity of the west wall of the main control room is also evaluated for the jet impingement (Y_j)]*

3H.3.4 Load Combinations and Acceptance Criteria

[*Concrete structures are designed in accordance with ACI 349 for the load combinations and load factors given in Table 3.8.4-2. Steel structures are designed in accordance with AISC N690 for the load combinations and stress limit coefficients given in Table 3.8.4-1. The following supplemental requirements are applied for the use of AISC N690:*

- *In Section Q1.0.2, the definition of secondary stress applies to stresses developed by temperature loading only.*
- *In Section Q1.3, where the structural effects of differential settlement are present, they are included with the dead load, D.*
- *In Table Q1.5.7.1, the stress limit coefficients for compression are as follows:*
  - *1.3 instead of 1.5 in load combinations 2, 5, and 6*
  - *1.4 instead of 1.6 in load combinations 7, 8, and 9*
  - *1.6 instead of 1.7 in load combination 11*
- *In Section Q1.5.8, for constrained members (rotation and/or displacement constraint such that a thermal load causes significant stresses) supporting safety-related structures, systems, or components, the stresses under load combinations 9, 10, and 11 are limited to those allowed in Table Q1.5.7.1 as modified above.*]*

3H.4 Seismic Analyses

[*A global seismic analysis of the AP1000 nuclear island structure is performed to obtain building seismic response for the seismic design of nuclear safety-related structures. The seismic loads for the design of the shear walls and the slabs in the auxiliary building are based on an equivalent static analysis of the auxiliary building and the shield building 3D finite element models.*]* This analysis is described in subsection 3.7.2. [*For determining the out-of-plane seismic loads on flexible slabs and wall segments, spectral accelerations are obtained from time history analyses or from the relevant response spectra, using the 7 percent damping curve. Hand calculations are performed to estimate the out-of-plane seismic forces and the corresponding bending moment in each shear wall and floor slab element to supplement the loads obtained from the global seismic analysis.*

3H.4.1 Live Load for Seismic Design

[*Floor live loads, based on requirements during plant construction and maintenance activities, are specified varying from 50 to 250 pounds per square foot.*

For the local design of members, such as the floors and beams, seismic loads include the response due to masses equal to 25 percent of the specified floor live loads or 75 percent of the roof snow load, whichever is applicable. These seismic loads are combined with 100 percent of

*NRC Staff approval is required prior to implementing a change in this information; see DCD Introduction Section 3.5.

the specified live loads, or 75 percent of the roof snow load, whichever is applicable. These live and snow loads are included as mass in calculating the vertical seismic forces on the floors and roof. The mass of equipment and distributed systems is included in both the dead and seismic loads.]*

3H.5 Structural Design of Critical Sections

[*This subsection summarizes the structural design of representative seismic Category I structural elements in the auxiliary building and shield building. These structures are listed below and the corresponding location numbers are shown on Figure 3H.5-1. The basis for their selection to this list is also provided for each structure.*

(1) South wall of auxiliary building (column line 1), elevation 66'-6" to elevation 180'-0". (This exterior wall illustrates typical loads such as soil pressure, surcharge, temperature gradients, seismic, and tornado.) – see subsection 3H.5.1.1 and Figures 3H.5-2 and 3H.5-3

(2) Interior wall of auxiliary building (column line 7.3), elevation 66'-6" to elevation 160'-6" (This is one of the most highly stressed shear walls.) – see subsection 3H.5.1.2 and Figure 3H.5-4

(3) West wall of main control room in auxiliary building (column line L), elevation 117'-6" to elevation 153'-0". (This illustrates design of a wall for subcompartment pressurization.) – see subsection 3H.5.1.3 and Figure 3H.5-12

(4) North wall of MSIV east compartment (column line 11), elevation 117'-6" to elevation 153'-0". (The main steam line is anchored to this wall segment.) – see subsection 3H.5.1.4 and Figure 3H.5-5

(5) Shield building cylinder, elevation 160'-6" to elevation 200'-0". (This includes the connection of the roof slab at elevation 180'-0" in (6) below.) – see subsection 3H.5.1.5 and Figure 3H.5-7

(6) Roof slab at elevation 180'-0" adjacent to shield building cylinder. (This is the connection between the two buildings at the highest elevation.) – see subsection 3H.5.2.1 and Figure 3.H.5-7

(7) Floor slab on metal decking at elevation 135'-3". (This is a typical slab on metal decking and structural steel framing.) – see subsection 3H.5.2.2 and Figure 3H.5-6

(8) 2'-0" slab in auxiliary building (operations work area (tagging room) ceiling) at elevation 135'-3". (This illustrates the design of a typical 2'-0" thick concrete slab.) – see subsection 3H.5.3.1 and Figure 3H.5-8. (Note: The 'Tagging Room' has been renamed as "Operations Work Area." However, to avoid changing the associated design and analysis documents, this room is referred to as the 'Tagging Room.')

(9) Finned floor in the main control room at elevation 135'-3". (This illustrates the design of the finned floors.) – see subsection 3H.5.4 and Figure 3H.5-9

*NRC Staff approval is required prior to implementing a change in this information; see DCD Introduction Section 3.5.

(10) Shield building roof/PCCS water storage tank. (This is a unique area of the roof and water tank.) – see subsection 3H.5.6.3

(11) Shield building roof to cylinder location at columns. (This is the junction between the shield building roof and the cylindrical wall of the shield building.) – see subsections 3H.5.6.1

(12) Divider wall between the spent fuel pool and the fuel transfer canal. (This wall is subjected to thermal and seismic sloshing loads.) – see subsection 3H.5.5.1 and Figure 3H.5-10]*

3H.5.1 Shear Walls

Structural Description

[*Shear walls in the auxiliary building vary in size, configuration, aspect ratio, and amount of reinforcement. The stress levels in shear walls depend on these parameters and the seismic acceleration level. The range of these parameters and the stress levels in various regions of the most severely stressed shear wall are described in the following paragraphs.*

The height of the major structural shear walls in the auxiliary building ranges between 30 to 120 feet. The length ranges between 40 and 260 feet. The aspect ratio of these walls (full height/full length) is generally less than 1.0 and often less than 0.25. The walls are typically 2 to 5 feet thick, and are monolithically cast with the concrete floor slabs, which are 9 inches to 2 feet thick. Exterior shear walls are several stories high and do not have many large openings. Interior shear walls, however, are discontinuous in both vertical and horizontal directions. The in-plane behavior of these shear walls, including the large openings, is adequately represented in the analytical models for the global seismic response. Where the refinement of these finite element models is insufficient for design of the reinforcement, for example in walls with a large number of openings, detailed finite element models are used.

The shear walls are used as the primary system for resisting the lateral loads, such as earthquakes. The auxiliary building shear walls are also evaluated for flexure and shear due to the out-of-plane loads.]*

Design Approach

[*The auxiliary building shear walls are designed to withstand the loads specified in subsection 3H.3.3. Beside dead, live, and other normal operating condition loads, the following loads are considered in the shear wall design:*

- *Seismic loads*
  - *The SSE loads for the wall are obtained from the seismic analyses of auxiliary/shield buildings that are described in subsection 3H.4.*
  - *Calculations are performed by considering shear wall segments bounded by the floors below and above the segment and the adjacent walls perpendicular to, on both sides of, the segment under consideration. Appropriate boundary conditions are assumed for the four edges of the segment. Natural frequency of wall segments are determined using*

*NRC Staff approval is required prior to implementing a change in this information; see DCD Introduction Section 3.5.

finite element models or text book formulas for the frequency of plate structures. Corresponding spectral acceleration is determined from the applicable response spectrum.

– *Exterior walls, below grade level, are also evaluated for dynamic earth pressure exerted during an SSE for two cases:*

- *Dynamic earth pressure calculated in accordance with ASCE 4-98*
- *Passive earth pressure*

- *Accident pressure load*

  – *Shear walls of the main steam isolation valves (MSIV) rooms are designed for 6 pounds per square inch (psi) differential pressure acting in conjunction with the seismic loads. Member forces due to accident pressure and SSE are combined by absolute sum.*

  – *The main control room wall of the east MSIV compartment is evaluated for the pressure and the jet load due to a postulated main steamline break.*

- *Tornado load*

  For exterior walls above grade level, tornado loads are considered.

The design temperatures for thermal gradient are included in Table 3H.5-1.

The shear walls are designed for the load combinations, as applicable, contained in Table 3.8.4-2. The wall sections are designed in accordance with the requirements of ACI 349-01.]*

3H.5.1.1 Exterior Wall at Column Line 1

[*The wall at column line 1 is the exterior wall at the south end of the nuclear island. The reinforced concrete wall extends from the top of the basemat at elevation 66'-6" to the roof at elevation 180'-0". It is 3'-0" thick below the grade and 2'-3" thick above the grade.*

*The wall is designed for the applicable loads including dead load, live load, hydrostatic load, static and dynamic lateral soil pressure loads, seismic loads, and thermal loads. For various segments of this wall, Table 3H.5-3 presents the details of the wall reinforcement. The sections where the required reinforcement is calculated are shown in Figure 3H.5-2 (Sheet 1). Typical wall reinforcement is shown on Figure 3H.5-3.]**

3H.5.1.2 Wall at Column Line 7.3

[*The wall at column line 7.3 is a shear wall that connects the shield building and the nuclear island exterior wall at column line I. It extends from the top of the basemat at elevation 66'-6" to the top of the roof. The wall is 3 feet thick below the grade at elevation 100'-0" and 2 feet thick above the grade. Out-of-plane lateral support is provided to the wall by the floor slabs on either side of it and the roof at the top.*

*NRC Staff approval is required prior to implementing a change in this information; see DCD Introduction Section 3.5.

Table 3H.5-5 presents the details of the wall reinforcement. The sections where the required reinforcement is calculated are shown in Figure 3H.5-2 (Sheet 2). Typical wall reinforcement is shown on Figure 3H.5-4]*

3H.5.1.3 Wall at Column Line L

[*The wall at column line L is a shear wall on the west side of the Main Control Room. It extends from the top of the basemat at elevation 66'-6" to the top of the roof. The wall is 2 feet thick. Out-of-plane lateral support is provided to the wall by the floor slabs on either side of it and the roof at the top. The segment of the wall that is a part of the main control room boundary is from elevation 117'-6" to elevation 135'-3".*

The auxiliary building design loads are described in subsection 3H.3.3, and the wall is designed for the applicable loads. In addition to the dead, live and seismic loads, the wall is designed to withstand a 6 pounds per square inch pressure load due to a pipe break in the MSIV room even though it is a break exclusion area. This wall segment is also designed to withstand a jet load due to the pipe break.

Table 3H.5-7 and Figure 3H.5-12 present the details of the wall reinforcement. The sections where the required reinforcement is calculated are shown in Figure 3H.5-2 (Sheet 3).]*

3H.5.1.4 Wall at Column Line 11

[*The north wall of the MSIV east compartment, at column line 11 between elevation 117'-6" and elevation 153'-0", has been identified as a critical section.*

The segment of the wall between elevation 117'-6" and elevation 135'-3" is 4 feet thick, and several pipes such as the main steam line, main feed water line, and the start-up feed water line are anchored to this wall at the interface with the turbine building.

The wall segment from elevation 135'-3" to elevation 153'-0" does not provide support to any high energy lines, and is 2 feet thick. This portion does not have to withstand reactions from high energy line breaks.

The wall is designed to withstand loads such as the dead load, live load, seismic load and the thermal load. The MSIV room is a break exclusion area, but the design also considered the loads associated with one square foot pipe rupture in the MSIV room, such as compartment pressurization, jet load, and the reactions at the pipe anchors. The loads on the pipe anchor include pipe rupture loads for breaks in the turbine building.

The wall structure is analyzed using three dimensional finite element analyses supplemented by hand calculations. Analyses are performed for individual loads, and design loads are determined for applicable load combinations from Table 3.8.4-2.

Typical wall reinforcement is shown in Figure 3H.5-5.]*

*NRC Staff approval is required prior to implementing a change in this information; see DCD Introduction Section 3.5.

3H.5.1.5 Shield Building Cylinder at Elevation 180′-0″

[*The thickness of the cylindrical portion of the shield building wall is 3 feet. Below the air inlets region, the wall consists of high strength concrete contained within ½-inch think steel liner plates on both faces. The liner plates, tied to concrete with shear connectors, behave as reinforcement bars. Vertical angle stiffeners are provided to support the wet concrete load.*

The wall is designed for the applicable loads described in subsection 3H.3-3. A finite element analysis is performed to determine the design forces.

The design of the shield building roof is described in 3H.5.6.]*

3H.5.2 Composite Structures (Floors and Roof)

[*The floors consist of a concrete slab on metal deck, which rests on structural steel floor beams. Several floors in the auxiliary building are designed as one-way reinforced concrete slabs supported continuously on steel beams. Typically, the beams span between two reinforced concrete walls. The beams are designed as composite with formed metal deck spanning perpendicular to the members. Unshored construction is used. For the floors, beams are typically spaced at about 6-feet intervals and spans are between 16 feet and 25 feet.*]*

Structural Description

[*A typical layout of these floors is shown in Figure 3H.5-6. The metal deck rests on the top flange of the structural steel floor beam, with the longitudinal axes of the metal deck ribs and floor beams placed perpendicular to each other. The depth of the ribs for 9-inch concrete floor slabs and 15-inch deep concrete roof slabs are 3 inches and 4.5 inches respectively. The concrete slab is tied to the structural steel floor beam by shear connectors, which are welded to the top flange of the floor beam. The concrete slab and the floor beams form a composite floor system. For the design loads after hardening of concrete, the transformed section is used to check the stresses.*

The construction sequence is as follows:

- *The structural steel floor (floor beam, metal deck, and shear connectors) is fabricated in the shop, brought to the floor location, and placed in position. In some cases, the beams and deck are preassembled and placed as a module.*
- *The metal deck is used as the formwork, and concrete is poured on the metal deck. Until concrete hardens, the load is carried by the metal deck and the steel floor beam.*
- *During concreting, no shoring is provided.*]*

Design Approach

[*The floor design considers the dead, live, construction, extreme environmental, and other applicable loads identified in Section 3H.3.3. The design floor loading includes the equipment attached to the floor. The end condition for the steel beams is simply supported, or continuous.*

*NRC Staff approval is required prior to implementing a change in this information; see DCD Introduction Section 3.5.

The seismic load is obtained using the applicable floor acceleration response spectrum (7 percent damping for the SSE loads).

The load combinations applicable to the design of these floors are shown in Tables 3.8.4-1 and 3.8.4-2. The design of the floor system is performed in two parts:

- *Design of structural steel beams*
  - *The structural steel floor beams are evaluated to withstand the weight of wet concrete during the placement of concrete. The composite section is designed for the design loads during normal and extreme environment conditions. Shear connectors are also designed.*
- *Design of concrete slab*
  - *The concrete slab and the steel reinforcement of the composite section are evaluated for normal and extreme environmental conditions. The slab concrete and the reinforcement is designed to meet the requirements of American Concrete Institute standard ACI 349-01 "Code Requirements for Nuclear Safety-Related Structures."*
  - *The slab design considers the in-plane and out-of-plane seismic forces. The global in-plane and out-of-plane forces are obtained from the equivalent static analysis of the 3D finite element model of the auxiliary and shield buildings. The out-of plane seismic forces due to floor self-excitation are determined by hand calculations using the applicable vertical seismic response spectrum and slab frequency.*]*

3H.5.2.1 Roof at Elevation 180′-0″, Area 6 (Critical Section is between Col. Lines N & K-2 and 3 & 4)

[*The layout of this segment of the roof is shown in Figure 3H.5-7 as Region "B." The concrete slab is 15 inches thick, plus 4.5-inch deep metal deck ribs. It is composite with 5 feet deep plate girders, spaced 14'-2" center to center, by using shear connectors. The girder flanges are 20" x 2" and the web is 56" x 7/16". The girders span approximately 64 feet in the north-south direction and are designed as simply supported. The concrete slab between the girders behaves as a one-way slab and is designed to span between the girders.*

The roof girders are designed for dead and live loads, including construction loads (with wet concrete) with simple support end conditions. A one-third increase in allowable stress is permitted for the construction load combination.

The girders are also evaluated as part of the composite beam after drying of concrete. The composite roof structure is designed to withstand dead and live load / snow load, as well as the wind, tornado and seismic loads.

A typical connection of the roof slab to the shield building is shown in Figure 3H.5-7. The figure shows the arrangement of reinforcement at the connection in the fuel building roof, the shield building cylindrical wall, and the walls of the auxiliary building just below the roof. The design summary is shown in Table 3.H.5-10.]*

*NRC Staff approval is required prior to implementing a change in this information; see DCD Introduction Section 3.5.

3H.5.2.2 Floor at Elevation 135′-3″, Area 1 (Between Column Lines M and P)

[*The design of a typical composite floor is shown in Figure 3H.5-6. The design summary is shown in Table 3.H.5-11. The concrete slab is 9 inches thick, plus 3-inch deep metal deck ribs. The floor beams are typically W14x26.*

- *The floor beams are designed for construction load (with wet concrete) with simple support end conditions. The design loads include the dead load and a construction live load of 100 pounds per square foot (psf) distributed load plus 5000 pounds concentrated load near the point of maximum shear and moment. A one-third increase in allowable stress is permitted.*

- *The floor beams are also designed as part of the composite beam after drying of the concrete. Because of continuity of rebars into the wall and the connection of the bottom flange to the support embedment, the end support condition is considered as fixed.*]*

3H.5.3 Reinforced Concrete Slabs

[*Reinforced concrete floors in auxiliary building are 24 inch or 36 inch thick. These floors are constructed with 16″ or 28″ of reinforced concrete placed on the top of 8 inch thick precast concrete panels. The 8″ thick precast concrete panels are installed at the bottom to serve as the formwork and withstand the load of wet concrete slab. The main reinforcement is provided in the precast panels which are connected to the concrete placed above it by shear reinforcement. The precast panels and the cast-in-place concrete act together as a composite reinforced concrete slab. Examples of such floors are the Operations Work Area (Tagging Room) ceiling slab at elevation 135 ft 3 inches in Area 2, and the Area 5/6 elevation 100′-0″ slab between column lines 1 & 2.*]*

3H.5.3.1 Operations Work Area (Tagging Room) Ceiling

The tagging room (room number 12401) location is shown on Figure 1.2-8. [*Figure 3H.5-8 shows the typical cross section and reinforcement. The design summary is shown in Table 3.H.5-12. Design dimensions of the Operations Work Area (Tagging Room) Ceiling are as follows:*

Room Size:	*16′-0″ x 11′-10″*
Boundary Conditions:	*Fixed at Walls J and K*
Clear Span:	*16′-0″*
Slab Thickness:	*Total = 24 inches* *Precast Panel = 8 inches* *Cast-in-Place = 16 inches*

*The two precast concrete panels, each 5′-11″ wide and spanning over 16′-0″ clear span, are installed to serve as the formwork.]**

*NRC Staff approval is required prior to implementing a change in this information; see DCD Introduction Section 3.5.

3H.5.4 Concrete Finned Floors

[*The ceilings of the main control room, and the instrumentation and control rooms in the auxiliary building are designed as finned-floor modules. A typical floor design is shown in Figure 3H.5-9. A finned floor consists of a 24-inch-thick concrete slab poured over a stiffened steel plate ceiling. The fins, welded to stiffen the steel plate, are half inch by 9 inch rectangular sections perpendicular to the plate. Shear studs are welded on the other side of the steel plate, and the steel and concrete act as a composite section. The fins are exposed to the environment of the room and enhance the heat-absorbing capacity of the ceiling. Several shop-fabricated steel panels, cut to room width and placed side by side perpendicular to the room length, are used to construct the stiffened plate ceiling in a modularized fashion. The stiffened plate with fins is designed to withstand construction loads prior to concrete hardening.*

The main control room ceiling fin floor is designed for the dead, live, and the seismic loads. The design summary is shown in Table 3.H.5-13.

The finned floor structure is evaluated for the load combinations listed in Tables 3.8.4-1 and 3.8.4-2.]*

Design Methodology

[*The finned floors are designed as reinforced concrete slabs in accordance with ACI Standard 349. For positive bending, the steel plate is in tension. The steel plate with fin stiffeners serves the function of bottom rebars. For negative bending, the potential for buckling due to compression in this element is checked by using the criteria of American National Standards Institute/American Institute of Steel Construction standards ANSI/AISC N690-94. Twisting, and therefore lateral buckling of the stiffener, is restrained by the concrete.*

The finned floors resist vertical and in-plane forces for both normal and extreme loading conditions. For positive bending, the concrete above the neutral axis carries compressive stresses and the stiffened steel plate resists tension. Negative bending compression is resisted by the stiffened plate and tension by top rebars in the concrete. The neutral axis for negative bending is located in the stiffened plate section, and the concrete in tension is assumed inactive. Horizontal in-plane forces are resisted by the stiffened plate and longitudinal rebars.

Minimum top reinforcement is provided in the slab in each direction for shrinkage and temperature crack control. In addition, top reinforcement located parallel to the stiffeners is used as tension reinforcement in negative bending. The stiffened plate provides crack control capability for the bottom of the slab in the transverse direction.

Composite section properties, based on an all steel-transformed section, as detailed in Section Q1.11 of ANSI/AISC N690-94, are used to design the following:

- *Weld strength between stiffener and the steel plate*
- *Spacing of the shear studs for the composite action*

*NRC Staff approval is required prior to implementing a change in this information; see DCD Introduction Section 3.5.

The stiffened plate alone is designed to resist all construction loads prior to the concrete hardening. The plate is designed against the criteria for bending and shear, specified in ANSI/AISC N690-94, Sections Q1.5.1.4 and Q1.5.1.2. In addition, the weld between the stiffener and the steel plate is designed to satisfy the code requirements.]*

3H.5.5 Structural Modules

[*Structural modules are used for some of the structural elements on the south side of the auxiliary building. These structural modules are structural elements built up with welded steel structural shapes and plates. The modules consist of steel faceplates connected by steel trusses as shown in Figure 3.8.3-2. The primary purpose of the trusses is to stiffen and hold together the faceplates during handling, erection, and concrete placement. The thickness of the steel faceplates is 0.5 inch except in a few local areas. The nominal spacing of the trusses is 30 inches. Shear studs are welded to the inside faces of the steel faceplates. Faceplates are welded to adjacent faceplates with full penetration welds so that the weld is at least as strong as the plate. The structural wall modules are anchored to the concrete base by reinforcing steel dowels or other types of connections embedded in the reinforced concrete below. After erection, concrete is placed between the faceplates.*

These modules include the spent fuel pool, fuel transfer canal, and cask loading and cask washdown pits. The structural modules are similar to the structural modules for the containment internal structures (see description in subsection 3.8.3 and Figures 3.8.3-8, 3.8.3-14, 3.8.3-15 and 3.8.3-17). Figure 3.8.4-5 shows the location of the structural modules in the auxiliary building. The structural modules extend from elevation 66'-6" to elevation 135'-3".

The loads and load combinations applicable to the structural modules in the auxiliary building are the same as for the containment internal structures]* (subsection 3.8.3.5.3) [*except that there are no ADS nor pressure loads due to pipe breaks.*

The design methodology of these modules in the auxiliary building is similar to the design of the structural modules in the containment internal structures]* described in subsection 3.8.3.5.3.

3H.5.5.1 West Wall of Spent Fuel Pool

[*Figure 3H.5-10 shows an elevation of the west wall of the spent fuel pool (column line L-2), and element numbers in the finite element model. The wall is a 4 feet thick concrete filled structural wall module.*

A finite element analysis is performed for seismic, thermal, and hydrostatic loads with the following assumptions:

- *The seismic input consists of the equivalent static accelerations derived from the maximum acceleration results by the FE model time history analyses.*
- *The thermal loads are applied as linearly varying temperatures between the inner and outer faces of the walls and floors.*

*NRC Staff approval is required prior to implementing a change in this information; see DCD Introduction Section 3.5.

- *The hydrostatic loads are applied to the spent fuel pool walls and floors, which is considered full with water. This provides the loads for the design of the divider wall.*

- *The seismic sloshing is modeled in the spent fuel pool.*

The concrete filled structural wall modules are designed as reinforced concrete structures in accordance with the requirements of ACI-349. The face plates are treated as reinforcing steel.

Methods of analysis are based on accepted principles of structural mechanics and are consistent with the geometry and boundary conditions of the structures. Both computer codes and hand calculations are used.

Table 3H.5-8 shows the required plate thickness for certain critical locations. The steel plates are generally half inch thick. The plate thickness is increased close to the bottom of the gate through the wall where the opening results in high local member forces.]*

3H.5.6 Shield Building Roof

[*The shield building roof is a reinforced concrete shell (supporting the passive containment cooling system tank and air diffuser), which is supported on a structural steel module. The structural configuration is shown on sheets 7, 8, and 9 of DCD (Reference 1) Figure 3.7.2-12. Air intakes are located at the top of the cylindrical portion of the shield building. The conical roof supports the passive containment cooling system tank. The conical roof is constructed as a structural steel module and lifted into place during construction. Steel beams provide permanent structural support for steel liner and concrete. The concrete is cast in place. Connection between concrete and steel liner are made using shear studs.*

The design of the shield building is shown in Figure 3H.5-11 (Sheets 1-7). These figures show the typical details of the "Tension Ring," "Columns between Air Inlets," and the "Exterior Wall of the Passive Containment Cooling System Tank." Figure 3H.5-11, Sheets 6 and 7, also shows the typical dimensions of the surface plates on the shield building cylindrical segment.

A detailed ANSYS model was used to represent these components of the enhanced design. Analyses were performed to determine the response of the structures for the dead weight, hydrostatic load due to PCS water, snow load, wind load, tornado load, seismic load (including seismic-induced pressure on PCS wall), and thermal loads. The design was evaluated to comply with the requirements of ANSI/AISC N690-94 and of ACI 349-01.

*The design summaries of the components are included in this report in Table 3H.5-9.]**

3H.5.6.1 Tension Ring

*[The wall segment between the conical roof and the air inlet region is designated as the tension ring. The governing load for the tension ring is axial tension. The reinforcement design for this region is shown in Figure 3H.5-11. The reinforcement required and the reinforcement provided is summarized in Table 3H.5-9.]**

*NRC Staff approval is required prior to implementing a change in this information; see DCD Introduction Section 3.5.

3H.5.6.2 Columns between Air Inlets

*[The columns between the air inlet tubes have typical plan dimensions of 54" x 17.1" (average). Its primary loading is vertical load due to dead and seismic loads and horizontal seismic shear. The reinforcement is shown in Figure 3H.5-11. The reinforcement required and the reinforcement provided is summarized in Table 3H.5-9.]**

3H.5.6.3 Exterior Wall of the Passive Containment Cooling System Tank

[*The exterior wall of the passive containment cooling system tank is two feet thick. The wall starts at the tank floor elevation of 293' 9". There is a stainless steel liner on the inside surface of the tank. The wall liner consists of a plate with stiffeners and welded studs on the concrete side of the plate. Leak chase channels are provided over the liner welds. The reinforcement in the concrete wall is designed without taking credit for the strength provided by the liner. The governing loads for design of the exterior wall are the hydrostatic pressure of the water, the in-plane and out-of-plane seismic response, and the temperature gradient across the wall. The reinforcement is shown in Figure 3H.5-11. The reinforcement required and the reinforcement provided is summarized in Table 3H.5-9.*]*

*NRC Staff approval is required prior to implementing a change in this information; see DCD Introduction Section 3.5.

Table 3H.5-1

[*NUCLEAR ISLAND: DESIGN TEMPERATURES FOR THERMAL GRADIENT*]*

Structure	*Load*	*Temperature (°F)*		*Remark*
PCS Tank Walls	*Normal Thermal, T_o*	*(Outside)* *-40* *+115*	*(Inside)* *+40* *+40*	–
Roofs and Exterior Walls Above Grade Air Temperatures	*Normal Thermal, T_o*	*(Outside)* *-40* *+115*	*(Inside)* *+70* *+70*	–
	Accident Thermal, T_a	*-40* *-40*	*+132* *+212*	*MSIV room* *Fuel handling area*
Roofs and Exterior Walls Above Grade Concrete Temperatures	*Normal Thermal, T_o*	*(Outside)* *-21.6* *-22.8* *-25.4* *+3.2*	*(Inside)* *+47* *+48.4* *+51.5* *+46.6*	*24" thickness* *27" thickness* *36" thickness* *15" insulated roof*
		+109.1 *+108.0* *+107.5* *+98.6*	*+79.2* *+80.7* *+81.3* *+81.3*	*24" thickness* *27" thickness* *36" thickness* *15" insulated roof*
	Accident Thermal, T_a	*-40* *-40* *+63*	*+132* *+212* *+212*	*MSIV room* *Fuel handling area* *Insulated roof*
Interior Walls/Slabs Concrete Temperatures	*Normal Thermal, T_o*	*(Side 1)* *N/R*	*(Side 2)* *N/R*	–
	Accident Thermal, T_a	*+70* *+70*	*+132* *+212*	*MSIV room* *Fuel handling area*
Exterior Walls Below Grade	*Normal Thermal, T_o*	*N/R*	*N/R*	–
	Accident Thermal, T_a	*N/R*	*N/R*	–
Basemat	*Normal Thermal, T_o*	*N/R*	*N/R*	–
	Accident Thermal, T_a	*N/R*	*N/R*	–
Shield Building (Between Upper Annulus and Auxiliary Building)	*Normal Thermal, T_o*	*(Outside)* *-40* *+115*	*(Inside)* *+70* *+70*	–
	Accident Thermal, T_a	*-40* *N/R*	*+132* *N/R*	*MSIV room wall* *Rest of wall*

Notes:

1. *N/R means loads due to a thermal gradient are not required to be considered.*
2. *Based on ACI 349-01 (Appendix A), the base temperature for the construction is assumed to be 70°F.*

*NRC Staff approval is required prior to implementing a change in this information; see DCD Introduction Section 3.5.

Table 3H.5-2 not used.

Table 3H.5-3

**[*EXTERIOR WALL ON COLUMN LINE 1*
DETAILS OF WALL REINFORCEMENT (in^2/ft)]***

(See Figure 3H.5-2 for Locations of Wall Sections.)

Wall Segment	***Location***	***Provided***		
		Vertical	***Horizontal***	***Shear***
Elevation 180'-0" to 135'-3"				*None*
WALL SECTION 1,6	*Outside Face*	*3.91*	*3.12*	
	Inside Face	*3.12*	*3.12*	
Elevation 135'-3" to 100'-0"				*None*
WALL SECTION 2,3,7	*Outside Face*	*3.12*	*3.12*	
	Inside Face	*3.12*	*3.12*	
Elevation 100'-0" to 82'-6"				*0.44*
WALL SECTION 4,8	*Outside Face*	*3.12*	*1.56*	
	Inside Face	*3.12*	*1.27*	
Elevation 82'-6" to 66'-6"				*1.00*
WALL SECTION 5,9	*Outside Face*	*4.39*	*1.27*	
	Inside Face	*3.12*	*1.27*	

*NRC Staff approval is required prior to implementing a change in this information; see DCD Introduction Section 3.5.

Table 3H.5-4 not used.

Table 3H.5-5

[*INTERIOR WALL ON COLUMN LINE 7.3 DETAILS OF WALL REINFORCEMENT*]*

(SEE FIGURE 3H.5-2 FOR LOCATIONS OF WALL SECTIONS.)

Wall Segment	***Location***	***Wall Section***	***Reinforcement on Each Face (in^2/ft)***
			Provided
From Roof to Elevation 155'-6"	*Horizontal*	*1*	*4.12*
	Vertical	*7*	*3.72*
Elevation 155'-6" to 135'-3"	*Horizontal*	*2*	*3.12*
	Vertical	*8*	*3.72*
Elevation 135'-3" to 117'-6"	*Horizontal*	*3*	*2.54*
	Vertical	*9*	*3.12*
Elevation 117'-6" to 100'-0"	*Horizontal*	*4*	*2.54*
	Vertical	*10*	*3.12*
Elevation 100'-0" to 82'-6"	*Horizontal*	*5*	*2.54*
	Vertical	*11*	*3.12*
Elevation 82'-6" to 66'-6"	*Horizontal*	*6*	*1.27*
	Vertical	*12*	*1.56*
Shear Reinforcement:			
From Roof to Elevation 155'-6"	*Standard hook or T headed bar*	*7*	*0.44*

*NRC Staff approval is required prior to implementing a change in this information; see DCD Introduction Section 3.5.

Table 3H.5-6 not used.

Table 3H.5-7

[*INTERIOR WALL ON COLUMN LINE L DETAILS OF WALL REINFORCEMENT*]*

(SEE FIGURE 3H.5-2, SHEET 3, FOR LOCATIONS OF WALL SECTIONS.)

Wall Segment	***Location***	***Wall Section***	***Reinforcement (in^2/ft^2)***
			Provided
Elevation 154'-2" to 135'-3"	*Horizontal*	*1*	*2.27*
	Vertical	*3*	*3.12*
Elevation 135'-3" to 117'-6"	*Horizontal*	*2*	*4.39*
	Vertical	*4*	*5.66*
Shear Reinforcement:			
Elevation 154'-2" to 135'-3"	*Standard hook or T headed bar*	*5*	*0.11*
Elevation 135'-3" to 117'-6"	*Standard hook or T headed bar*	*5*	*2.00*

*NRC Staff approval is required prior to implementing a change in this information; see DCD Introduction Section 3.5.

Table 3H.5-8 (Sheet 1 of 3)
[*DESIGN SUMMARY OF SPENT FUEL POOL WALL: ELEMENT NO. 20477*]*
Notes: *See Figure 3H.5-10 for element location.* *Plate thickness provided is 0.50 inches, which is much greater than the plate thickness required.*

*NRC Staff approval is required prior to implementing a change in this information; see DCD Introduction Section 3.5.

Table 3H.5-8 (Sheet 2 of 3)
[*DESIGN SUMMARY OF SPENT FUEL POOL WALL: ELEMENT NO. 10529*]*
Notes: *See Figure 3H.5-10 for element location.* *Plate thickness provided is 0.50 inches, which is much greater than the plate thickness required.*

*NRC Staff approval is required prior to implementing a change in this information; see DCD Introduction Section 3.5.

Table 3H.5-8 (Sheet 3 of 3)

[*DESIGN SUMMARY OF SPENT FUEL POOL WALL: ELEMENT NO. 10544*]*

Notes:

See Figure 3H.5-10 for element location.

Plate thickness provided is 0.50 inches, which is much greater than the plate thickness required.

*NRC Staff approval is required prior to implementing a change in this information; see DCD Introduction Section 3.5.

Security-Related Information, Withhold Under 10 CFR 2.390d

Table 3H.5-9 (Sheet 1 of 3)

SHIELD BUILDING ROOF REINFORCEMENT SUMMARY

(TENSION RING)

Security-Related Information, Withhold Under 10 CFR 2.390d

Table 3H.5-9 (Sheet 2a of 3)

SHIELD BUILDING ROOF REINFORCEMENT SUMMARY

(COLUMNS BETWEEN AIR INLETS)

Security-Related Information, Withhold Under 10 CFR 2.390d

Table 3H.5-9 (Sheet 2b of 3)

SHIELD BUILDING ROOF REINFORCEMENT SUMMARY

(COLUMNS BETWEEN AIR INLETS)

Security-Related Information, Withhold Under 10 CFR 2.390d

Table 3H.5-9 (Sheet 3 of 3)

SHIELD BUILDING ROOF REINFORCEMENT SUMMARY

(EXTERIOR WALL OF PASSIVE CONTAINMENT COOLING SYSTEM TANK)

Table 3H.5-10

[*DESIGN SUMMARY OF ROOF AT ELEVATION 180'-0", AREA 6*]*

(Near Shield Building Interface)

Governing Load Combination (Roof Girder)	
Combination Number	*3 – Extreme Environmental Condition Downward Seismic Acceleration*
Bending Moment:	
Allowable Stress	*= 33.3 ksi > Actual Stress*
Shear Force:	
Allowable Stress	*= 20.1 ksi > Actual Stress*
Governing Load Combination (Concrete Slab)	
Parallel to the Girders	
Combination Numbers	*3 – Extreme Environmental Condition*
Reinforcement (Each Face)	
Provided	*= 2.54 in^2/ft > Required*
Perpendicular to the Girders	
Combination Numbers	*3 – Extreme Environmental Condition*
Reinforcement (Each Face)	
Provided	*= 3.12 in^2/ft > Required*

*NRC Staff approval is required prior to implementing a change in this information; see DCD Introduction Section 3.5.

Table 3H.5-11 ***[DESIGN SUMMARY OF FLOOR AT ELEVATION 135'-3" AREA 1 (BETWEEN COLUMN LINES M AND P)]******	
Governing Load Combination (Steel Beam)	
Load Combination	*3 – Extreme Environmental Condition Downward Seismic*
Bending Moment	
Allowable Stress	*=33.26 ksi > Actual stress*
Shear Force	
Allowable Stress	*= 20.1 ksi > Actual stress*
Governing Load Combination (Concrete Slab)	
Parallel to the Beams	
Load Combination	*3 – Extreme Environmental Condition Downward Seismic*
Reinforcement (Each Face)	
Provided	*= 0.44 in^2/ft > Required*
Perpendicular to the Beams	
Load Combination	*Normal Condition*
Reinforcement (Each Face)	
Provided	*= 0.60 in^2/ft > Required*

*NRC Staff approval is required prior to implementing a change in this information; see DCD Introduction Section 3.5.

Table 3H.5-12

[*DESIGN SUMMARY OF FLOOR AT ELEVATION 135'-3" (OPERATIONS WORK AREA (TAGGING ROOM) CEILING)*]*

Design of Precast Concrete Panels	
Governing Load Combination	*Construction*
Bottom Reinforcement (E/W Direction)	
Provided	*= 0.79 in^2/ft*
Top Reinforcement (E/W Direction)	
Required	*= (Minimum required by Code)*
Provided	*= 0.20 in^2/ft*
Top and Bottom Reinforcement (N/S Direction)	
Required	*= (Minimum required by Code)*
Provided	*= 0.20 in^2/ft*
Design of 24-inch-Thick Slab	
Governing Load Combination	*Extreme Environmental Condition (SSE)*
Bottom Reinforcement (E/W Direction)	
Provided	*= 1.00 in^2/ft > Required*
Top Reinforcement (E/W Direction)	
Provided	*= 1.00 in^2/ft > Required*
Top and Bottom Reinforcement (N/S Direction)	
Provided	*= 0.79 in^2/ft > Required*

*NRC Staff approval is required prior to implementing a change in this information; see DCD Introduction Section 3.5.

Table 3H.5-13 **[*DESIGN SUMMARY OF FLOOR AT ELEVATION 135'-3" AREA 1 (MAIN CONTROL ROOM CEILING)*]***
The design of the bottom plate with fins is governed by the construction load.
The design evaluation results are summarized below: • *The actual area of the tension steel is 9.0 in^2, which provides a design strength of 518.5 kips-ft bending moment capacity. This is larger than the required capacity.* • *The design shear strength is 23.22 kips. This is larger than the required capacity.* • *The shear studs are spaced 9 inches c/c, in both directions. The calculated required spacing is 9.06 inches.*

*NRC Staff approval is required prior to implementing a change in this information; see DCD Introduction Section 3.5.

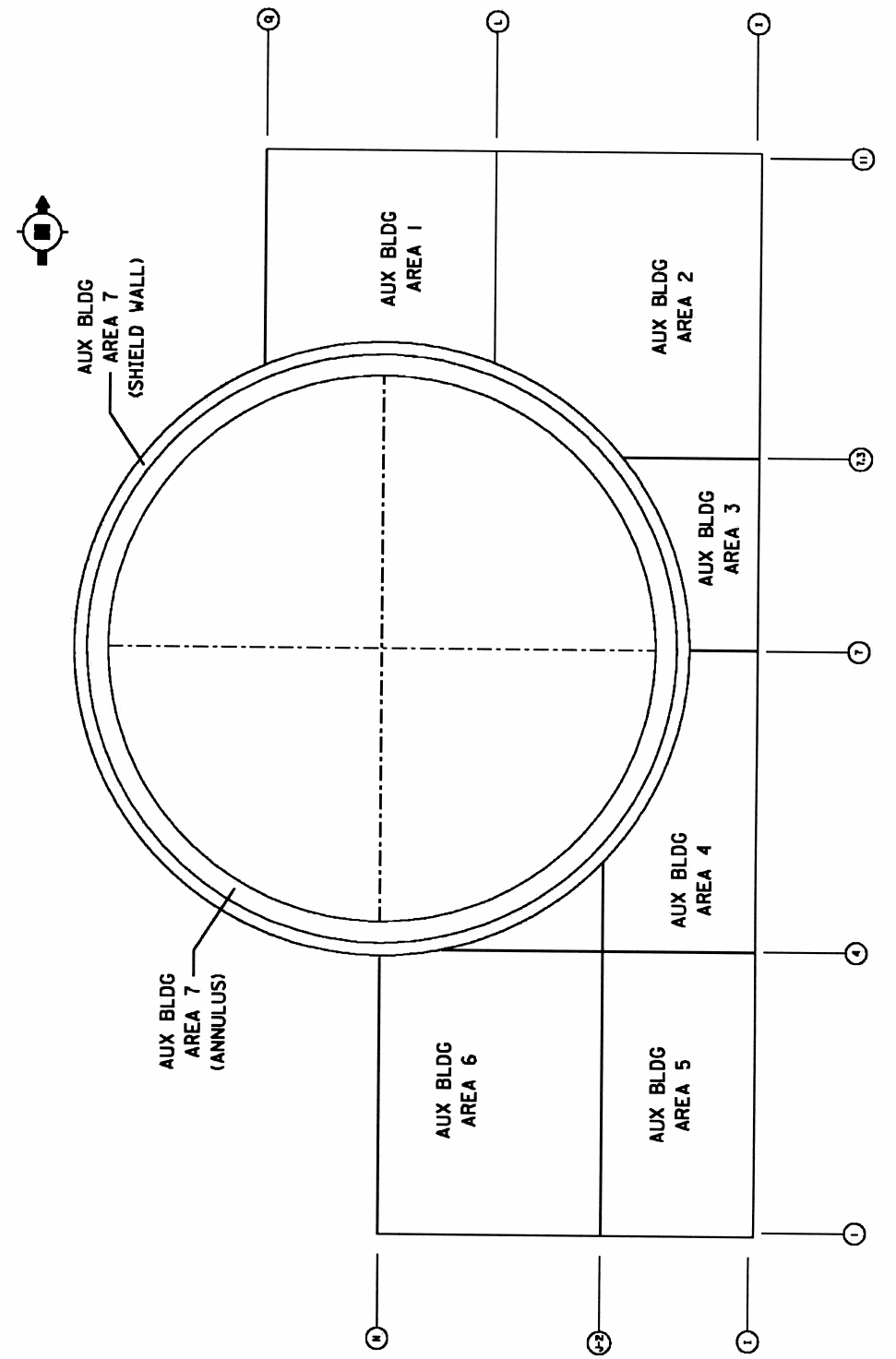

Figure 3H.2-1

[*General Layout of Auxiliary Building*]*

*NRC Staff approval is required prior to implementing a change in this information; see DCD Introduction Section 3.5.

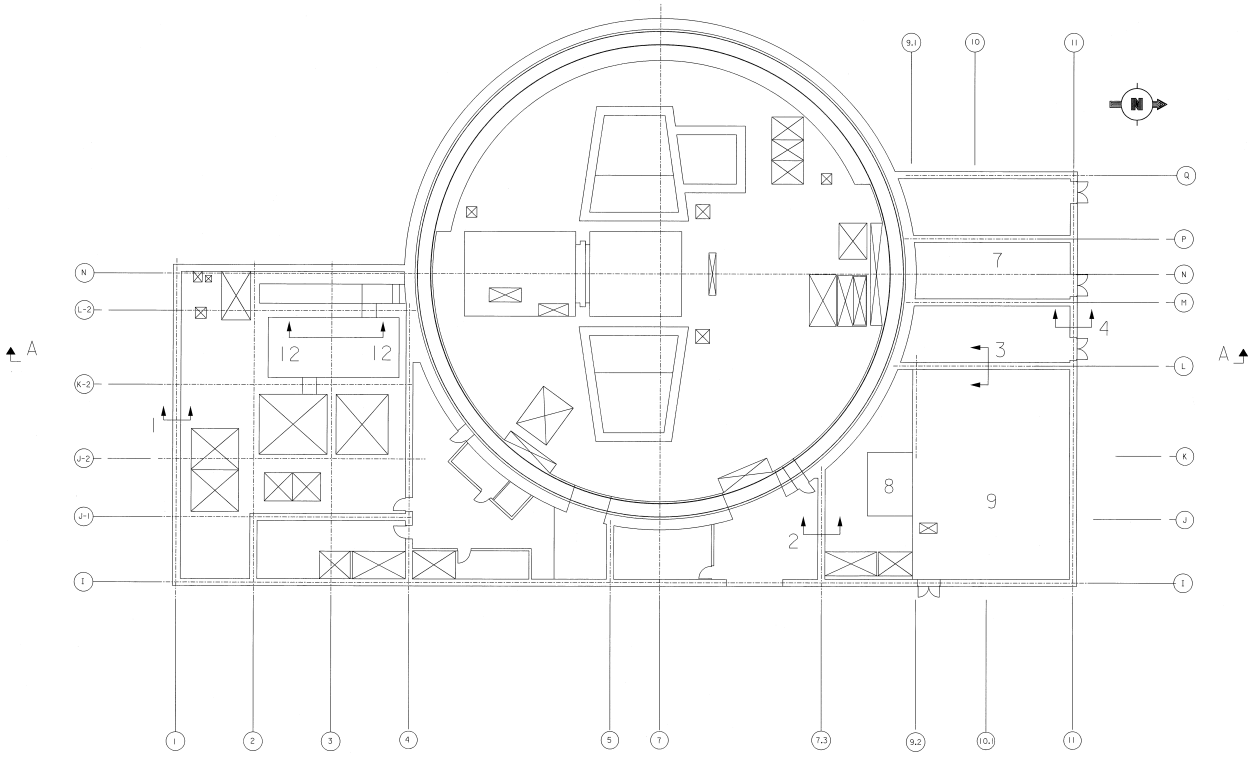

Figure 3H.5-1 (Sheet 1 of 3)

[Nuclear Island Critical Sections Plan at El. 135'-3"]*

*NRC Staff approval is required prior to implementing a change in this information; see DCD Introduction Section 3.5.

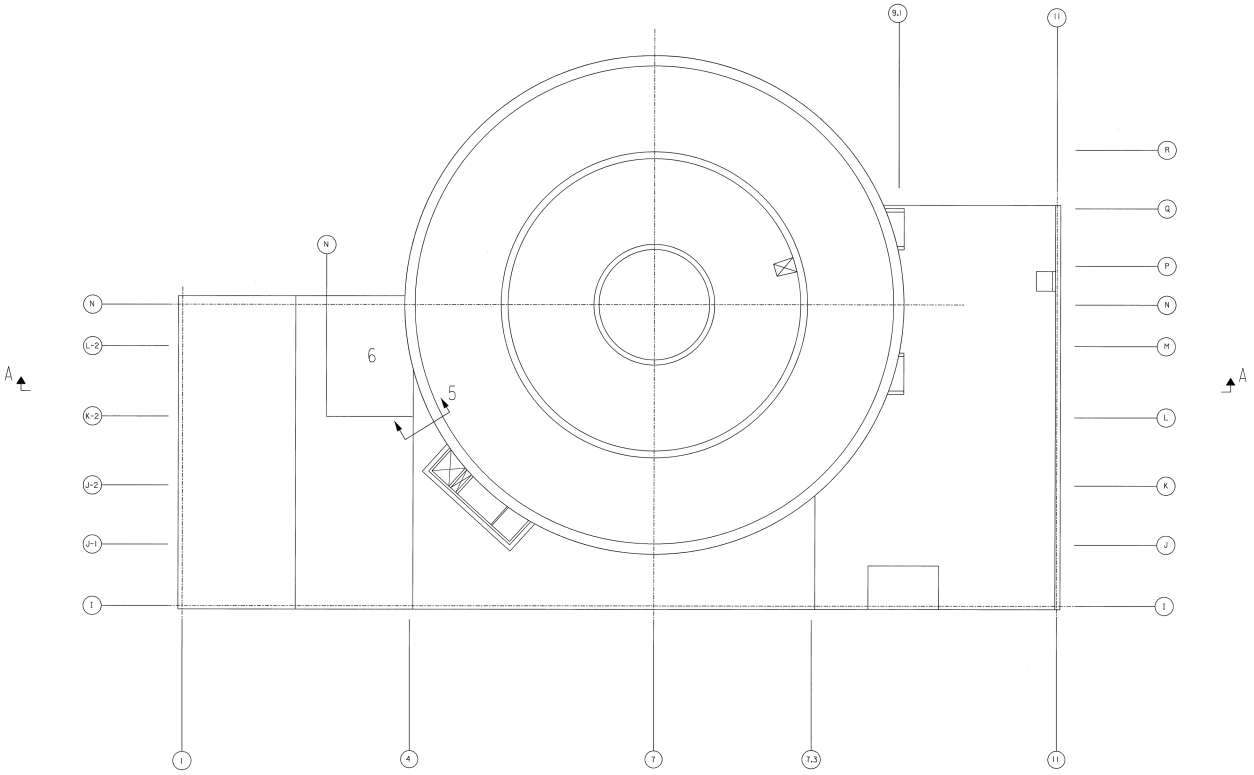

Figure 3H.5-1 (Sheet 2 of 3)

[*Nuclear Island Critical Sections Plan at El. 180'-0"*]*

*NRC Staff approval is required prior to implementing a change in this information; see DCD Introduction Section 3.5.

[This page intentionally blank]

Security-Related Information, Withhold Under 10 CFR 2.390d

Figure 3H.5-1 (Sheet 3 of 3)

[Nuclear Island Critical Sections Section A-A]*

*NRC Staff approval is required prior to implementing a change in this information; see DCD Introduction Section 3.5.

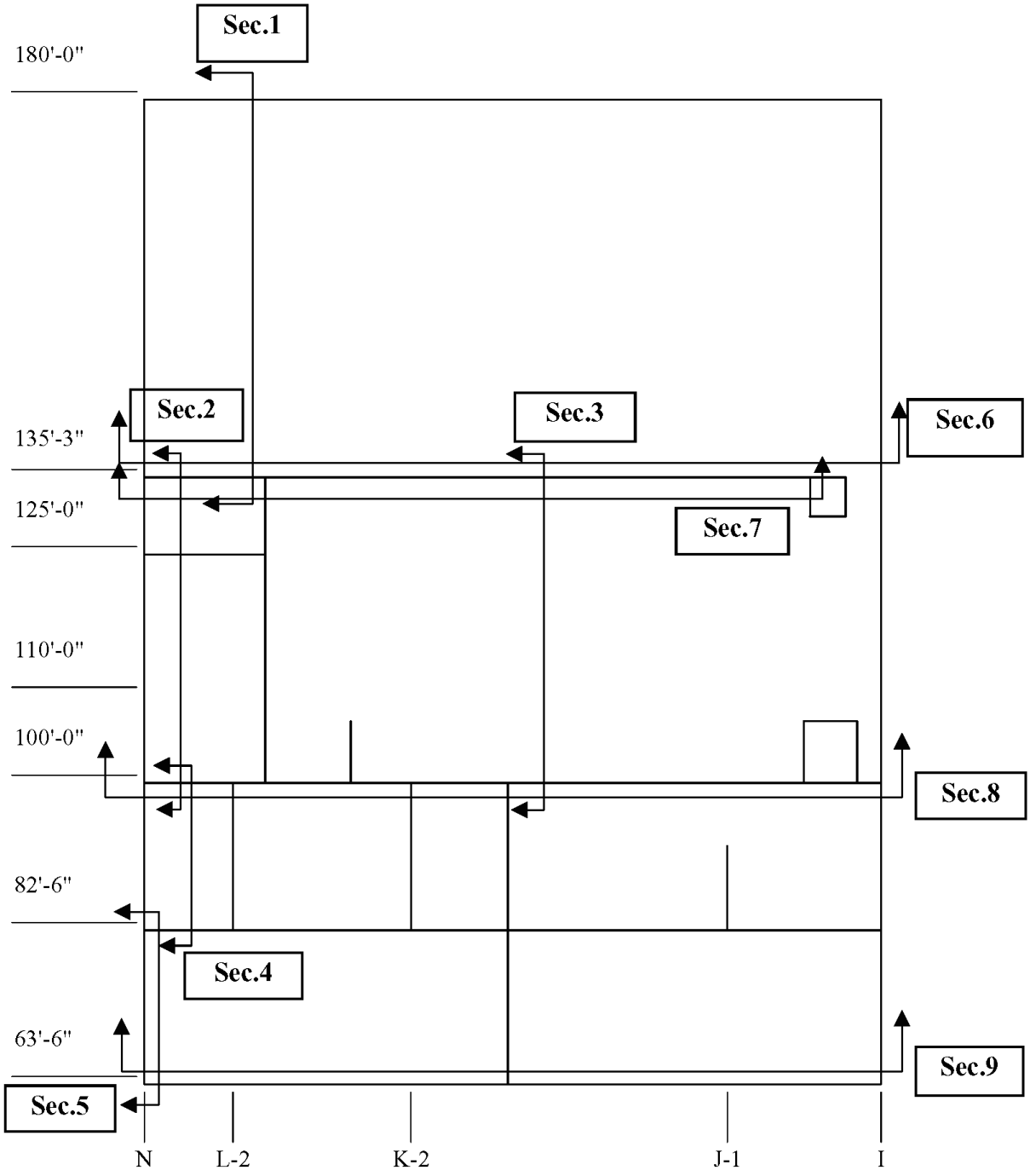

Figure 3H.5-2 (Sheet 1 of 3)

[*Wall on Column Line 1*]*

*NRC Staff approval is required prior to implementing a change in this information; see DCD Introduction Section 3.5.

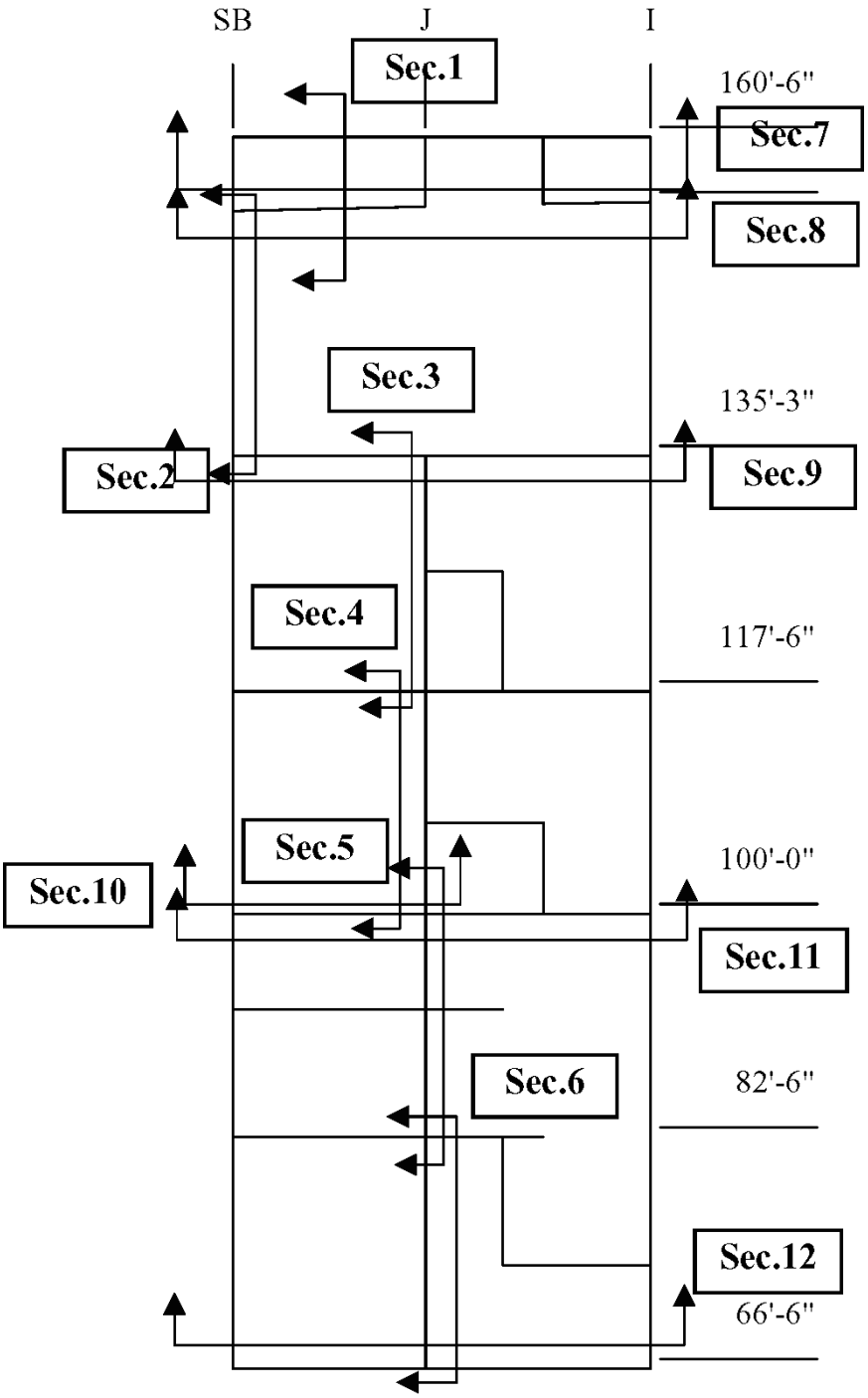

Figure 3H.5-2 (Sheet 2 of 3)

[*Wall on Column Line 7.3*]*

*NRC Staff approval is required prior to implementing a change in this information; see DCD Introduction Section 3.5.

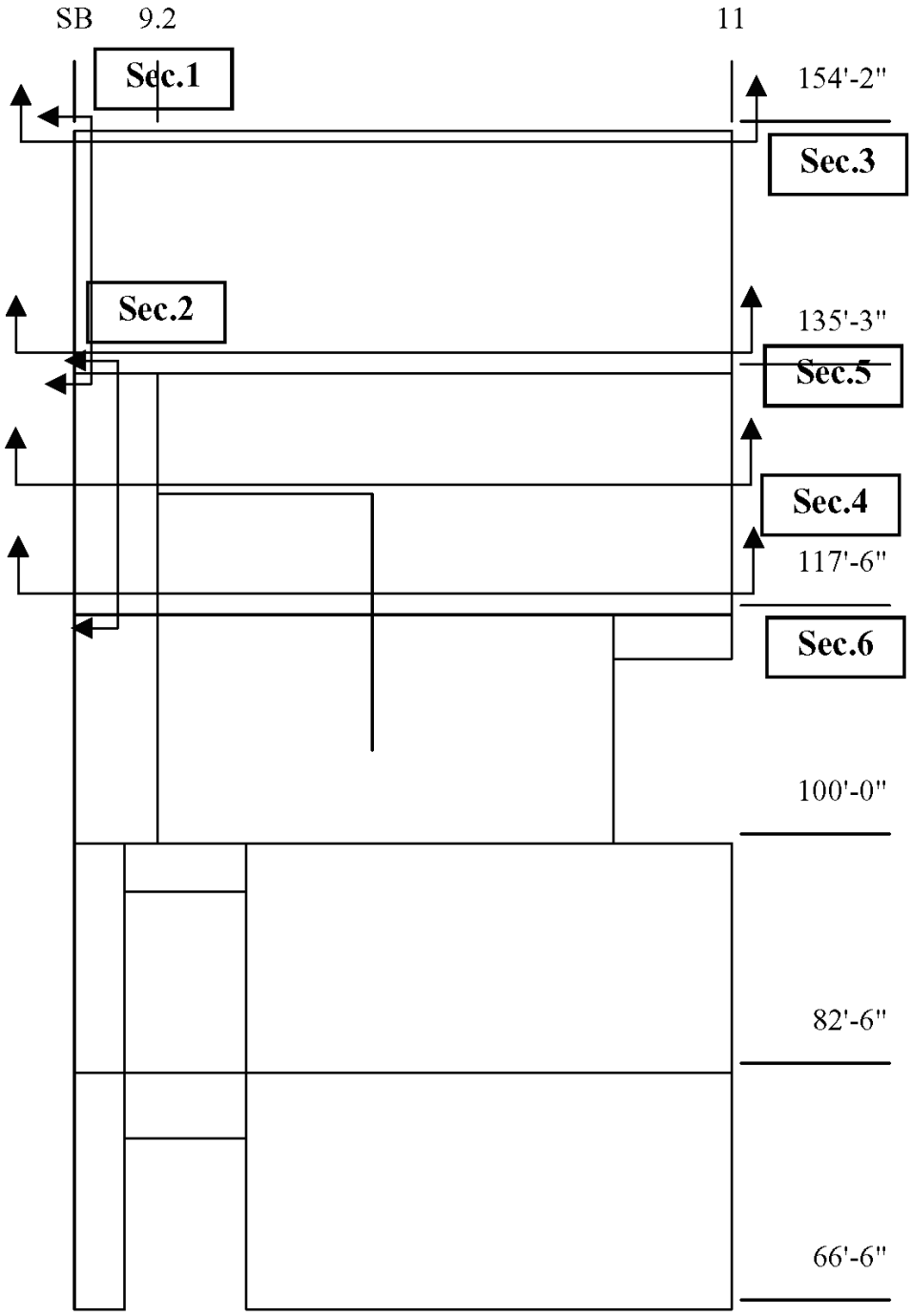

Figure 3H.5-2 (Sheet 3 of 3)

[*Wall on Column Line L*]*

*NRC Staff approval is required prior to implementing a change in this information; see DCD Introduction Section 3.5.

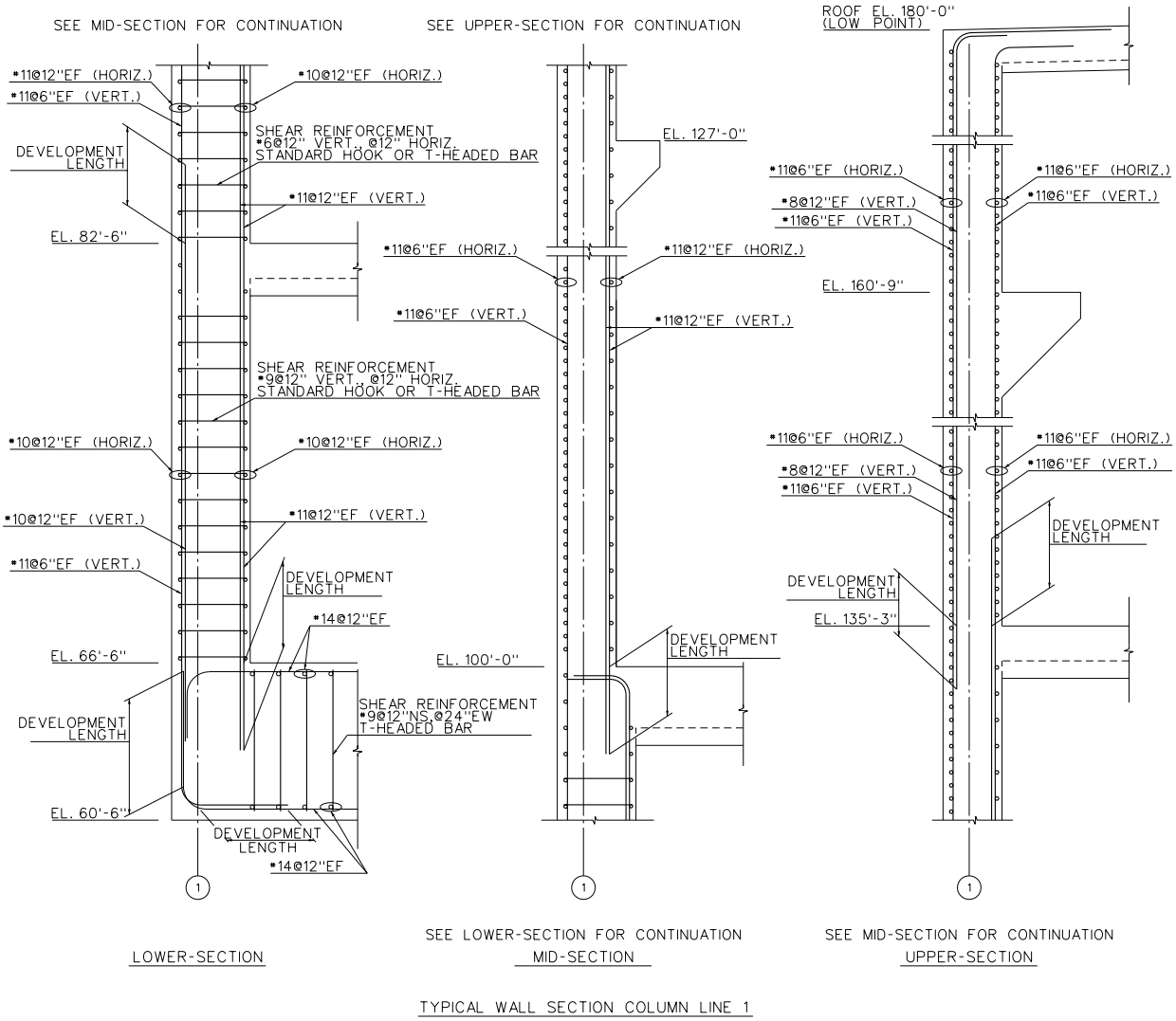

Figure 3H.5-3

[*Typical Reinforcement in Wall on Column Line 1*]*

*NRC Staff approval is required prior to implementing a change in this information; see DCD Introduction Section 3.5.

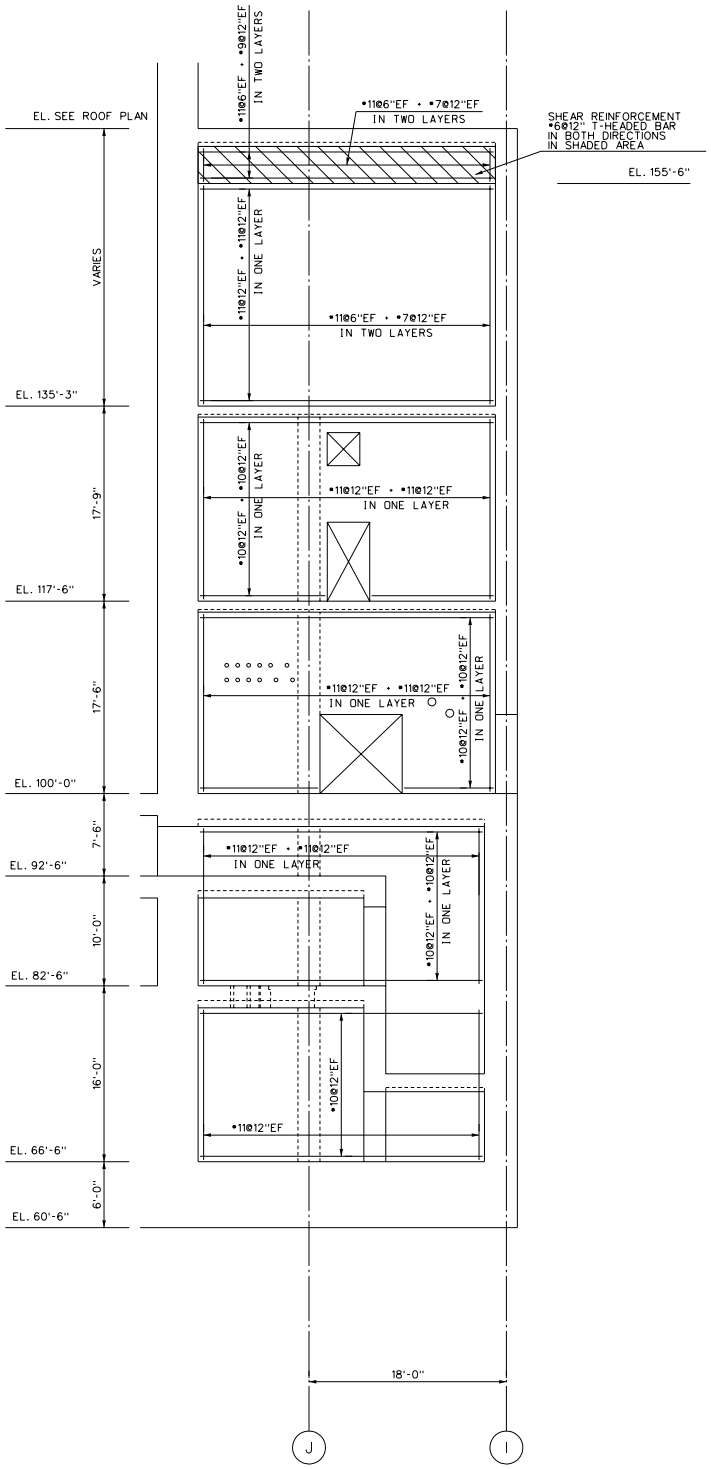

Figure 3H.5-4

[*Typical Reinforcement in Wall 7.3*]*

*NRC Staff approval is required prior to implementing a change in this information; see DCD Introduction Section 3.5.

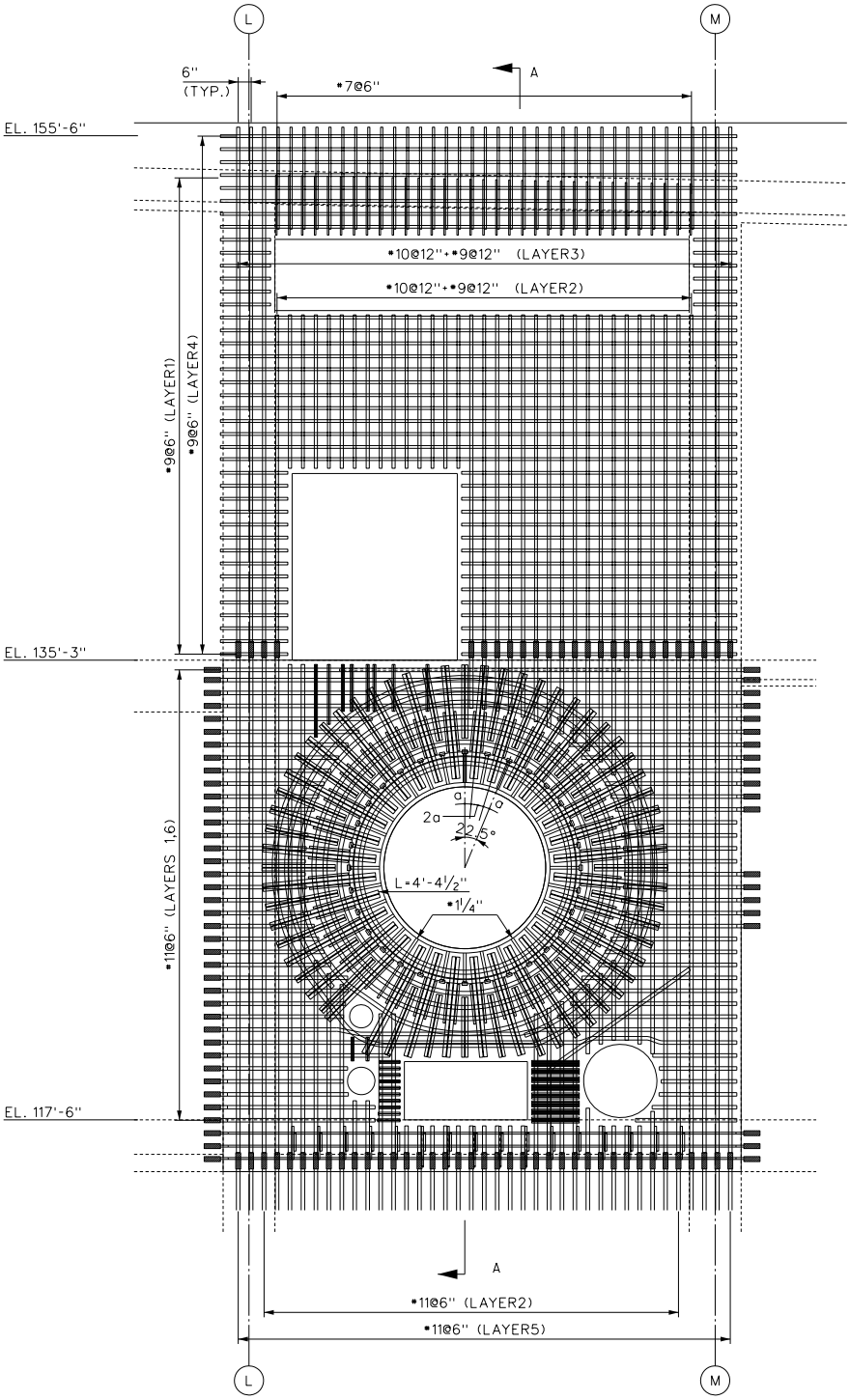

Figure 3H.5-5 (Sheet 1 of 3)

[*Concrete Reinforcement in Wall 11*]*

*NRC Staff approval is required prior to implementing a change in this information; see DCD Introduction Section 3.5.

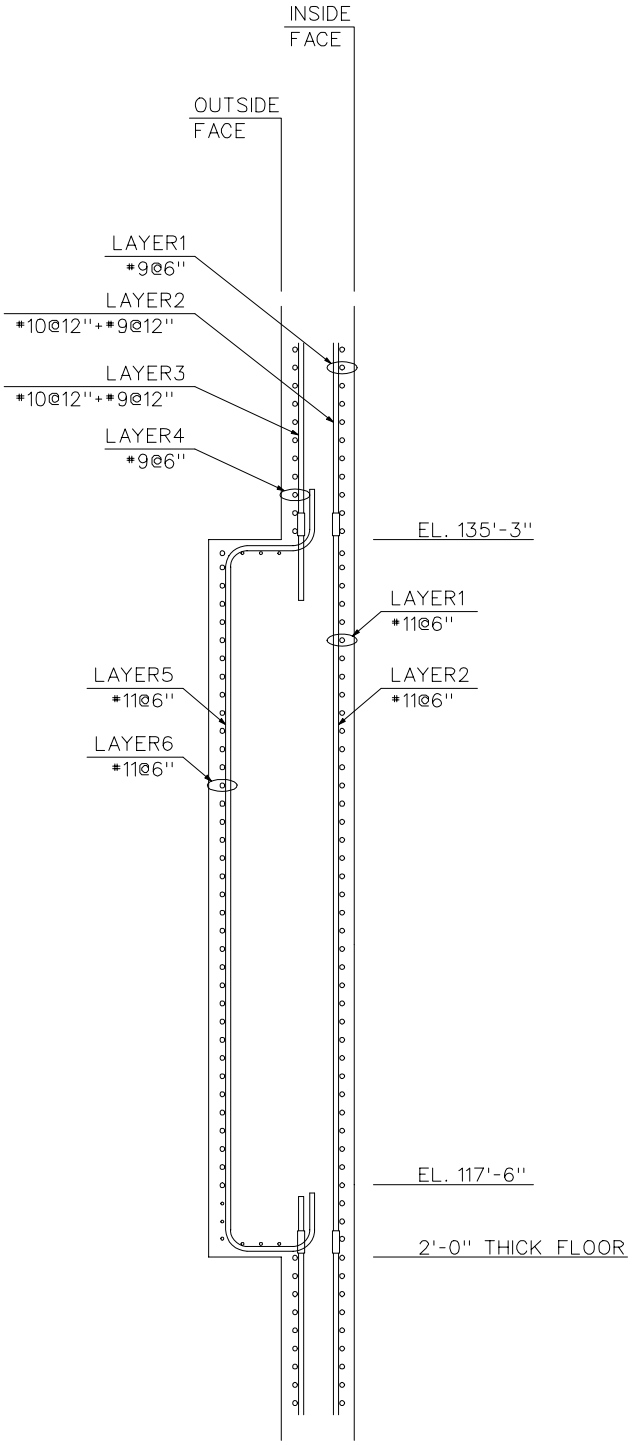

Figure 3H.5-5 (Sheet 2 of 3)

[*Concrete Reinforcement Layers in Wall 11 (Looking East)*]*

*NRC Staff approval is required prior to implementing a change in this information; see DCD Introduction Section 3.5.

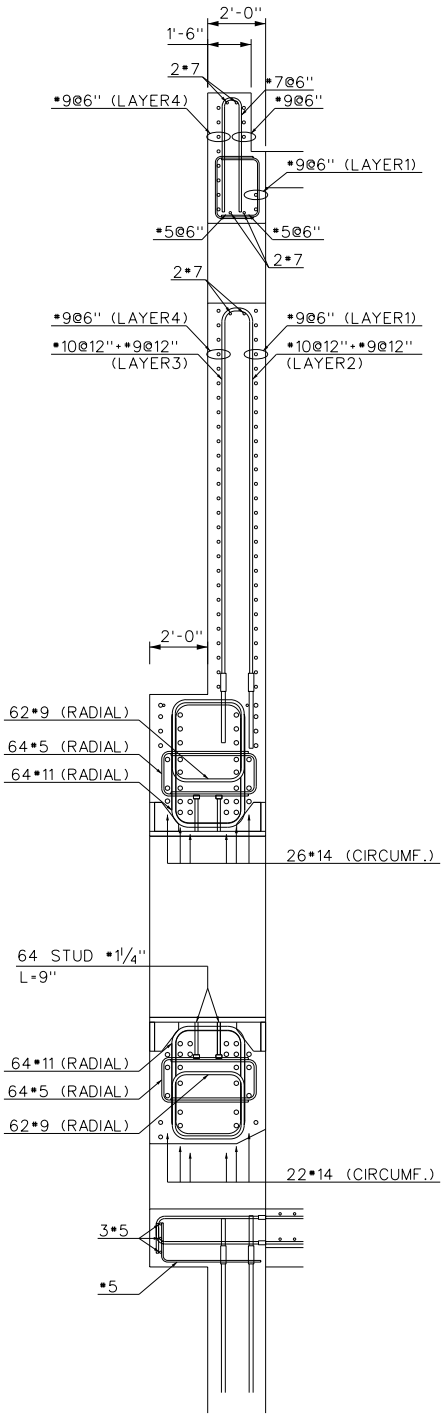

Figure 3H.5-5 (Sheet 3 of 3)

[Wall 11 at Main Steamline Anchor Section A-A]*

*NRC Staff approval is required prior to implementing a change in this information; see DCD Introduction Section 3.5.

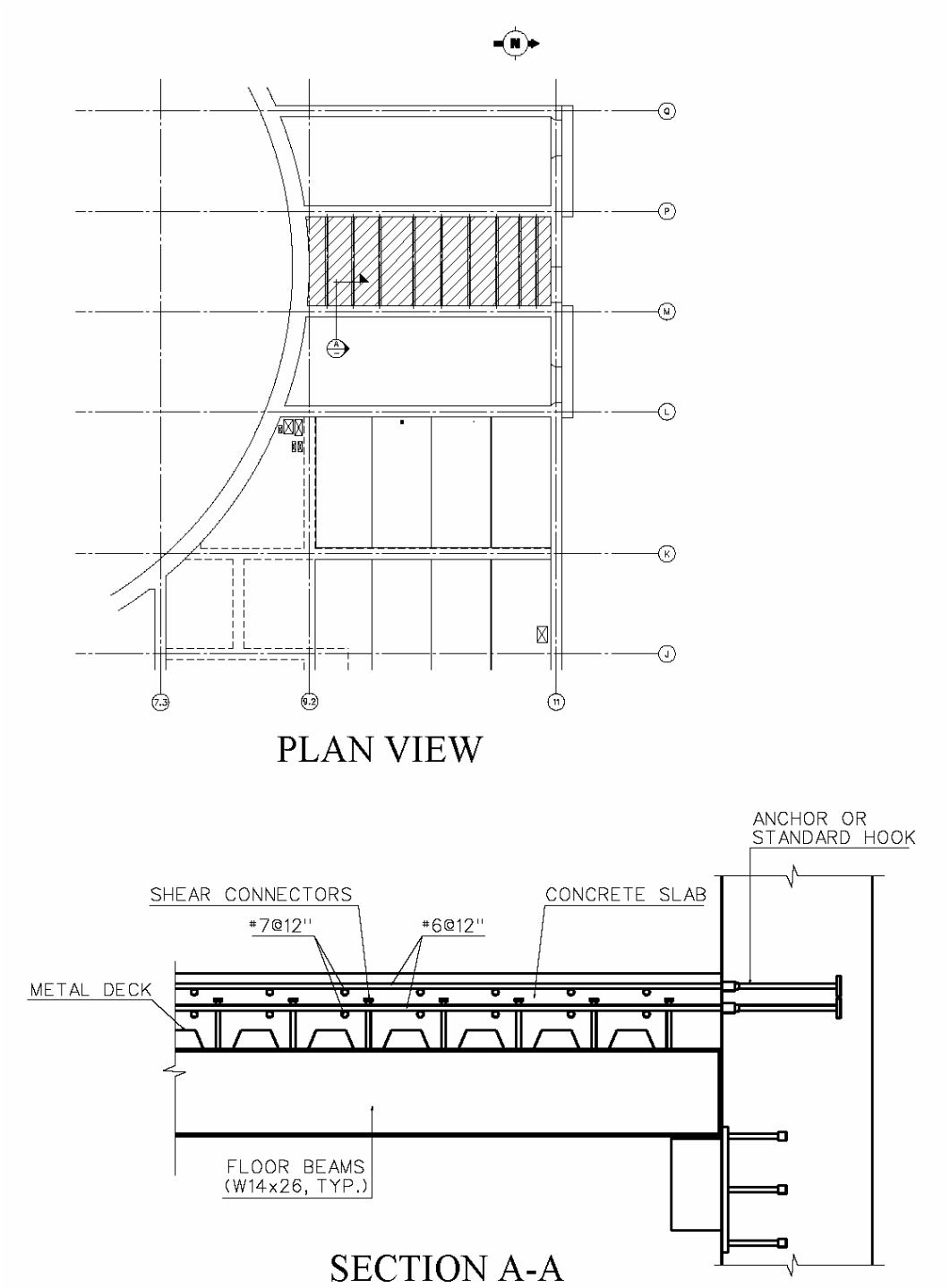

Figure 3H.5-6

[Auxiliary Building Typical Composite Floor]*

*NRC Staff approval is required prior to implementing a change in this information; see DCD Introduction Section 3.5.

[Page Intentionally Left Blank]

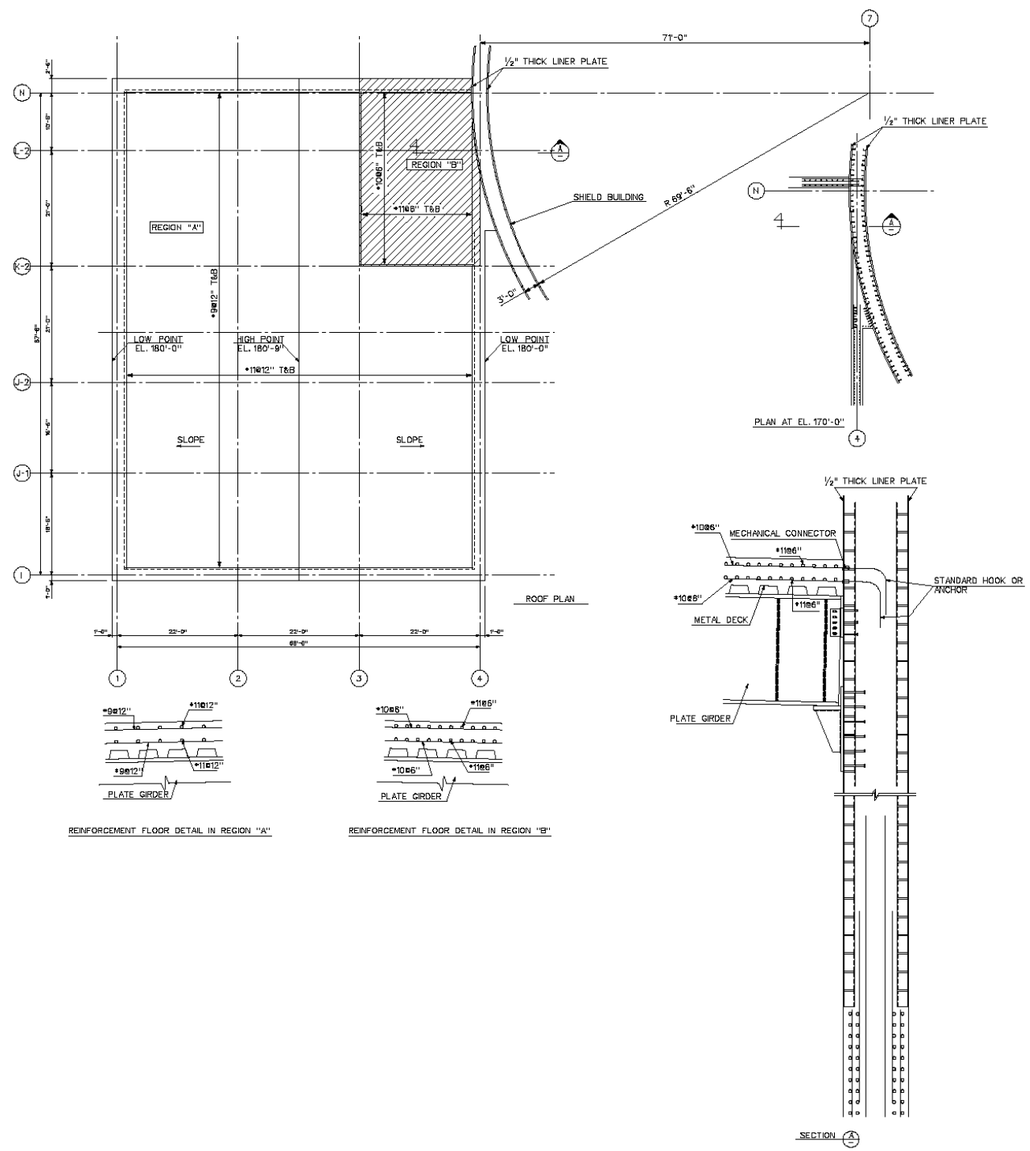

Figure 3H.5-7

[*Typical Reinforcement and Connection to Shield Building*]*

*NRC Staff approval is required prior to implementing a change in this information; see DCD Introduction Section 3.5.

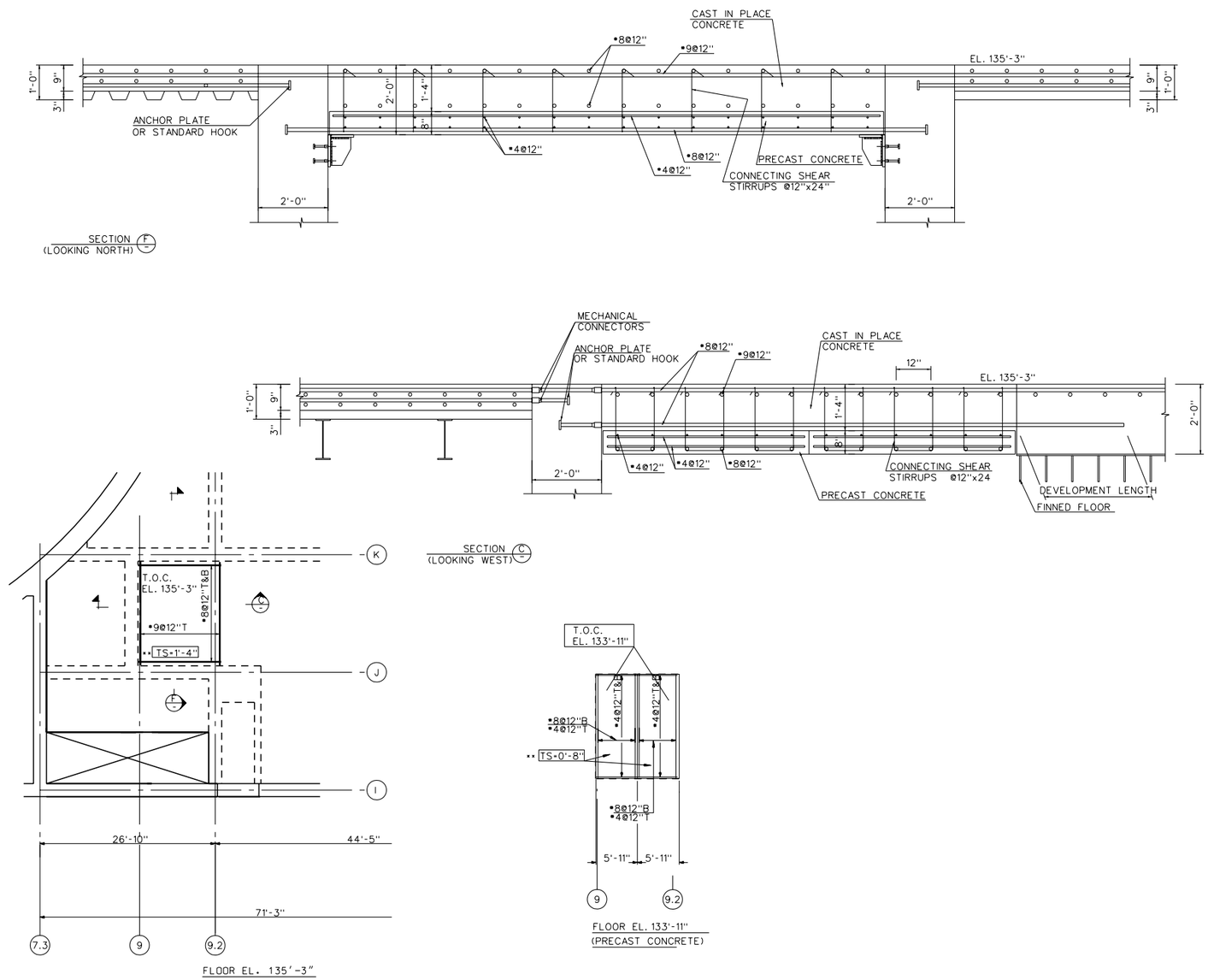

Figure 3H.5-8

[Auxiliary Building Operations Work Area (Tagging Room) Ceiling]*

*NRC Staff approval is required prior to implementing a change in this information; see DCD Introduction Section 3.5.

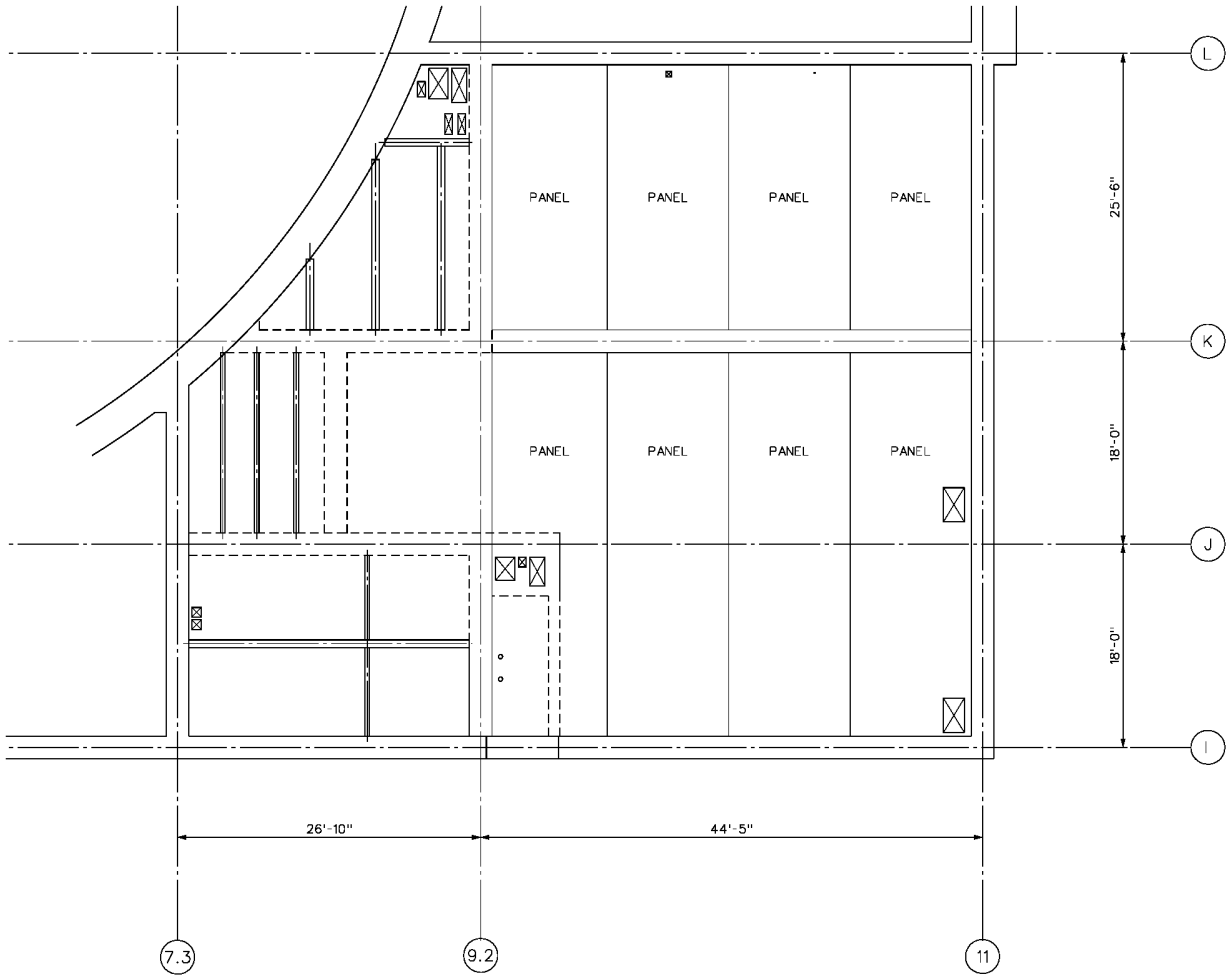

Figure 3H.5-9 (Sheet 1 of 3)

[*Auxiliary Building Finned Floor*]*

*NRC Staff approval is required prior to implementing a change in this information; see DCD Introduction Section 3.5.

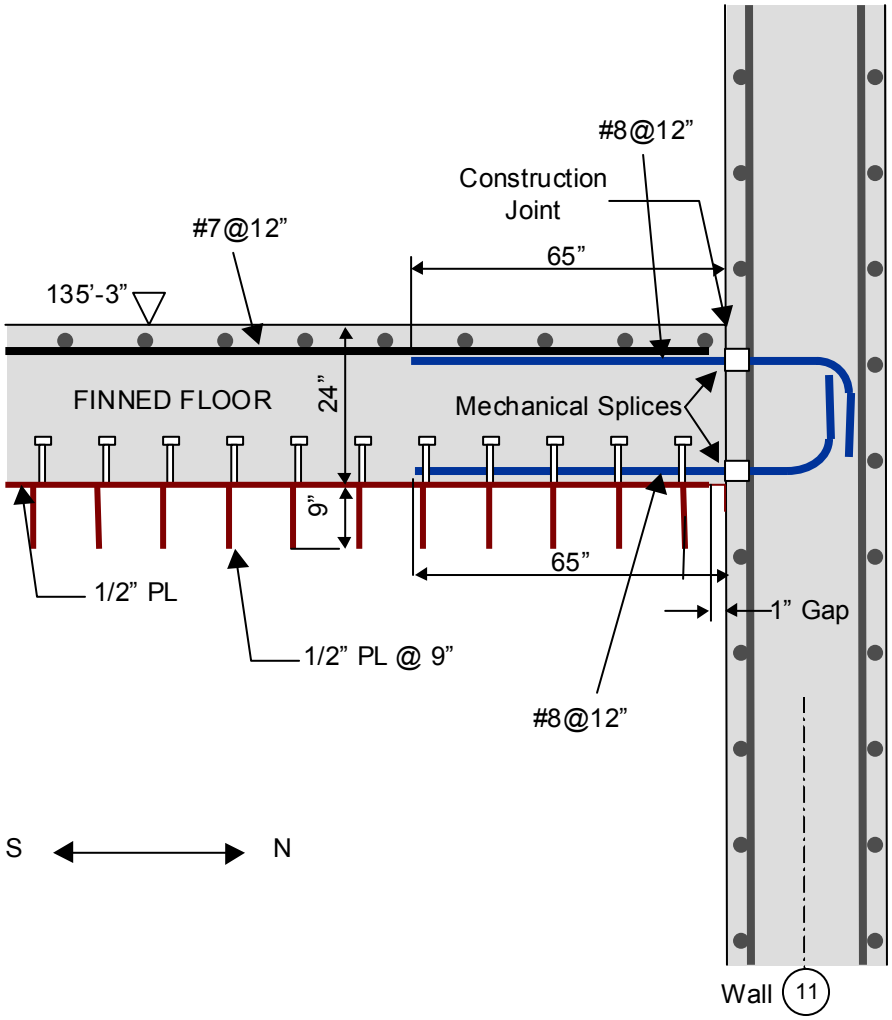

Figure 3H.5-9 (Sheet 2 of 3)

[*Auxiliary Building Finned Floor*]*

*NRC Staff approval is required prior to implementing a change in this information; see DCD Introduction Section 3.5.

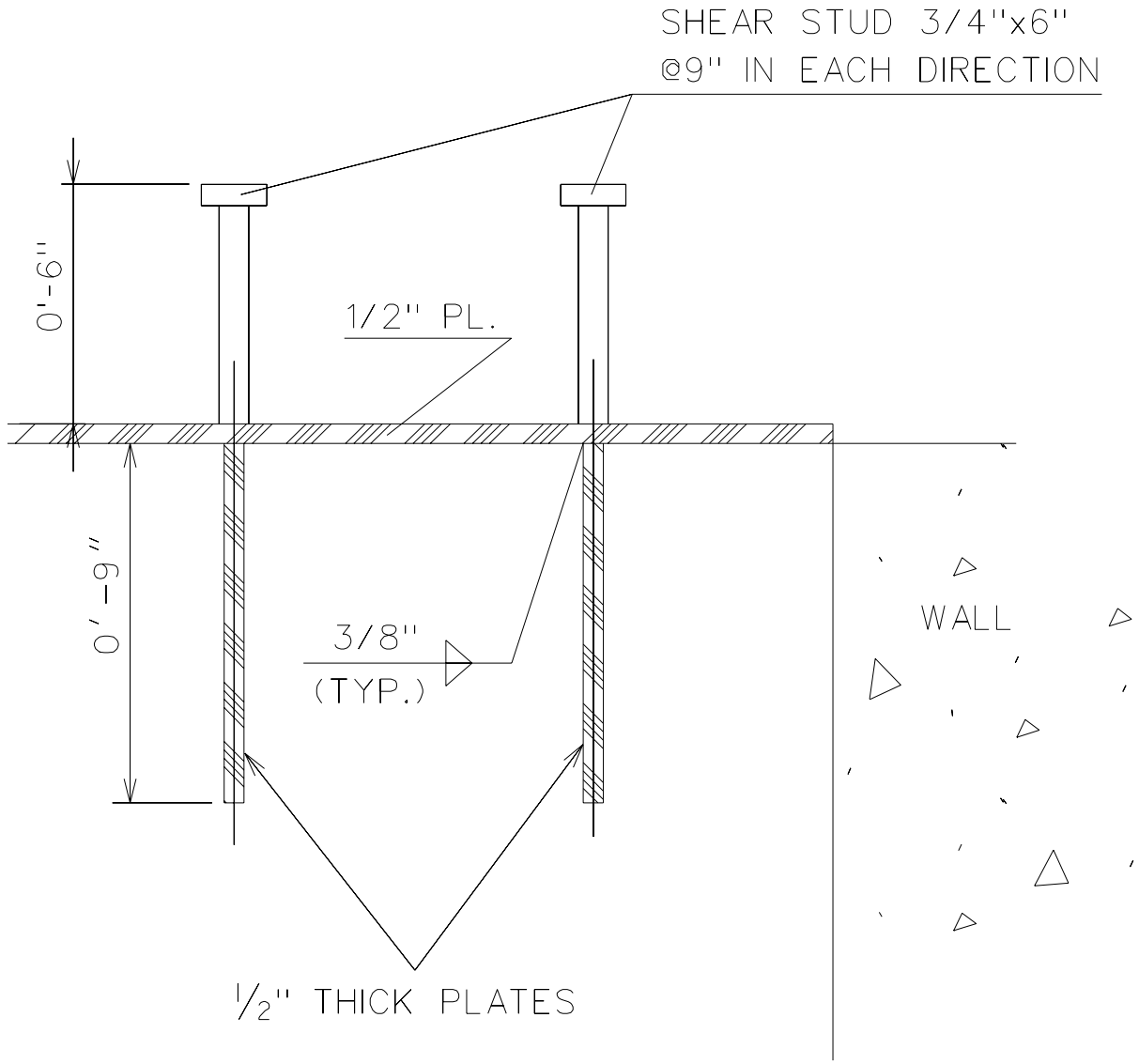

Figure 3H.5-9 (Sheet 3 of 3)

[*Auxiliary Building Finned Floor*]*

*NRC Staff approval is required prior to implementing a change in this information; see DCD Introduction Section 3.5.

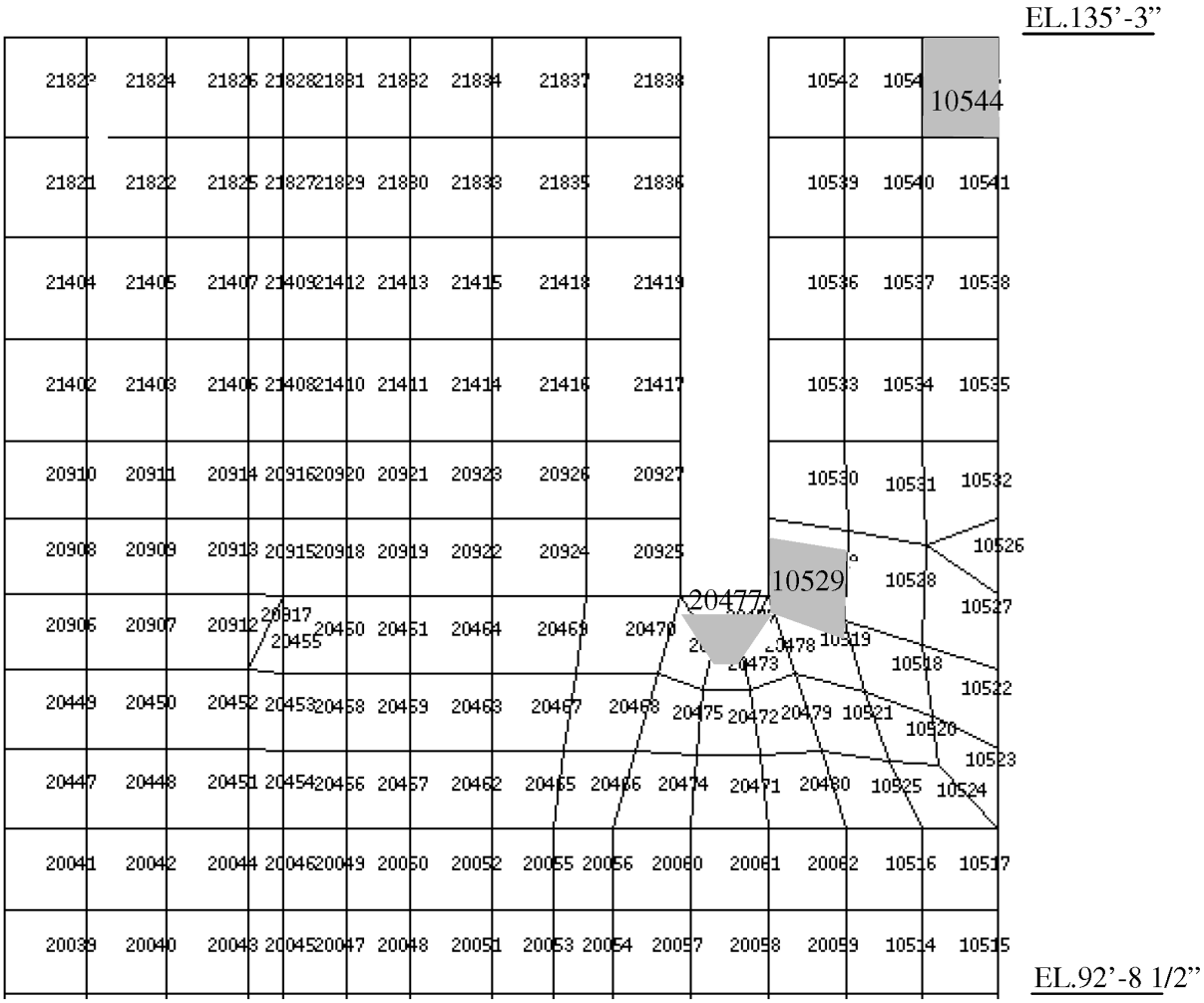

Figure 3H.5-10

[*Spent Fuel Pool Wall Divider Wall Element Locations*]*

*NRC Staff approval is required prior to implementing a change in this information; see DCD Introduction Section 3.5.

Security-Related Information, Withhold Under 10 CFR 2.390d

Figure 3H.5-11 (Sheet 1 of 7)

[Typical Design of Shield Building: Roof and Air Inlets]*

*NRC Staff approval is required prior to implementing a change in this information; see DCD Introduction Section 3.5.

Security-Related Information, Withhold Under 10 CFR 2.390d

Figure 3H.5-11 (Sheet 2 of 7)

[Typical Design of Shield Building: Concrete Detail Section A-A]*

*NRC Staff approval is required prior to implementing a change in this information; see DCD Introduction Section 3.5.

Security-Related Information, Withhold Under 10 CFR 2.390d

Figure 3H.5-11 (Sheet 3 of 7)

[Typical Design of Shield Building: Roof/Air Inlet Interface]*

*NRC Staff approval is required prior to implementing a change in this information; see DCD Introduction Section 3.5.

Security-Related Information, Withhold Under 10 CFR 2.390d

Figure 3H.5-11 (Sheet 4 of 7)

[Typical Design of Shield Building: Air Inlets Top Layer Spacing]*

*NRC Staff approval is required prior to implementing a change in this information; see DCD Introduction Section 3.5.

Security-Related Information, Withhold Under 10 CFR 2.390d

Figure 3H.5-11 (Sheet 5 of 7)

[Typical Design of Shield Building: Tank/Roof Interface Reinforcement]*

*NRC Staff approval is required prior to implementing a change in this information; see DCD Introduction Section 3.5.

Security-Related Information, Withhold Under 10 CFR 2.390d

Figure 3H.5-11 (Sheet 6 of 7)

[Typical Design of Shield Building: Surface Plates on Cylindrical Section – Developed View 90-270 Degrees]*

*NRC Staff approval is required prior to implementing a change in this information; see DCD Introduction Section 3.5.

Security-Related Information, Withhold Under 10 CFR 2.390d

Figure 3H.5-11 (Sheet 7 of 7)

[Typical Design of Shield Building: Surface Plates on Cylindrical Section – Developed View 90-270 Degrees]*

*NRC Staff approval is required prior to implementing a change in this information; see DCD Introduction Section 3.5.

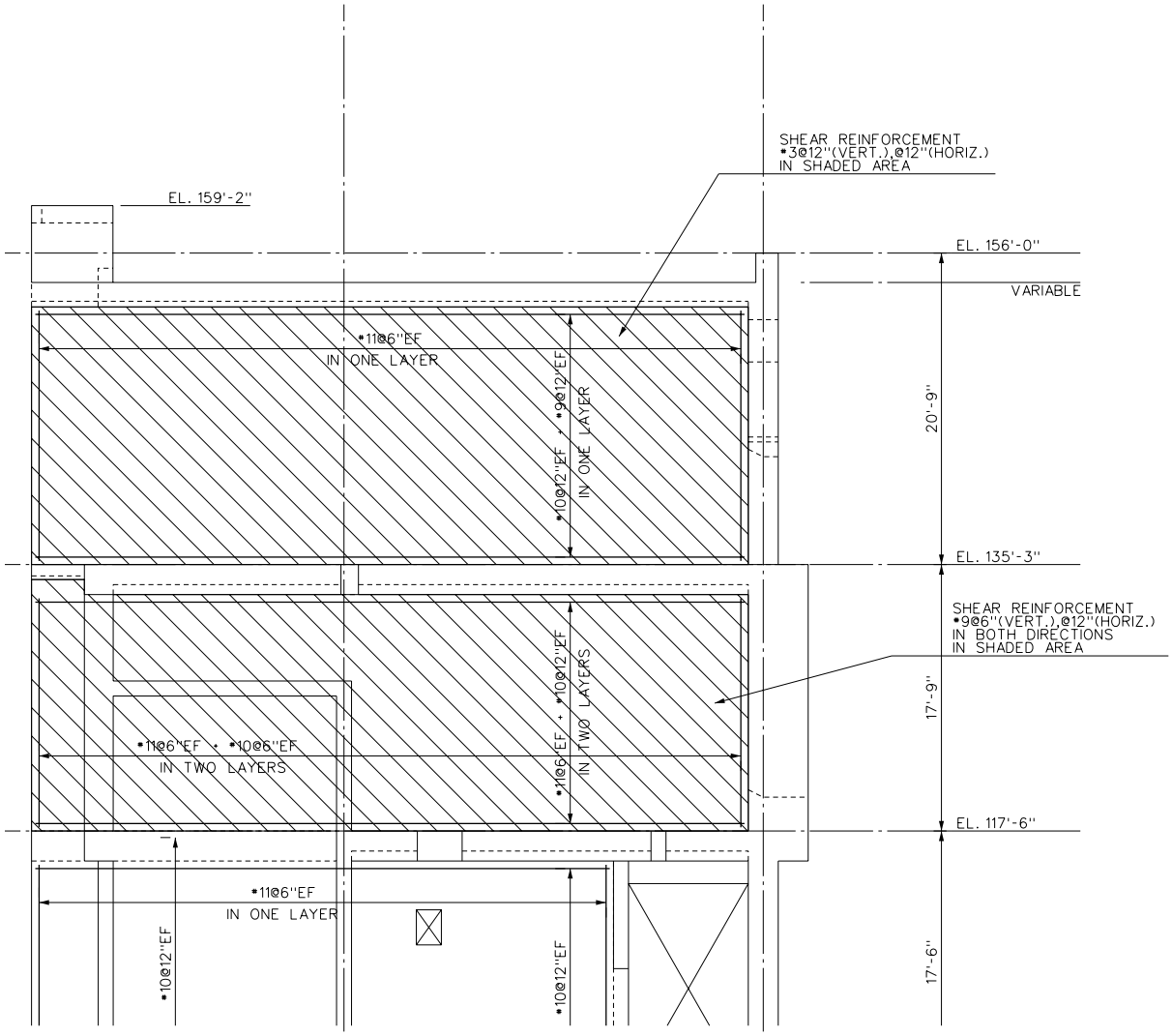

Figure 3H.5-12

[*Typical Reinforcement in Wall L*]*

*NRC Staff approval is required prior to implementing a change in this information; see DCD Introduction Section 3.5.