3.8 Design of Category I Structures

3.8.1 Concrete Containment

This subsection is not applicable to the AP1000.

3.8.2 Steel Containment

3.8.2.1 Description of the Containment

3.8.2.1.1 General

This subsection describes the structural design of the steel containment vessel and its parts and appurtenances. The steel containment vessel is an integral part of the containment system whose function is described in Section 6.2. It serves both to limit releases in the event of an accident and to provide the safety-related ultimate heat sink.

The containment vessel is an ASME metal containment. The information contained in this subsection is based on the design specification and preliminary design and analyses of the vessel. Final detailed analyses will be documented in the ASME Design Report.

The containment arrangement is indicated in the general arrangement figures in Section 1.2. The portion of the vessel above elevation 132′-3″ is surrounded by the shield building but is exposed to ambient conditions as part of the passive cooling flow path. A flexible watertight and airtight seal is provided at elevation 132′-3″ between the containment vessel and the shield building. The portion of the vessel below elevation 132′-3″ is fully enclosed within the shield building.

Figure 3.8.2-1 shows the containment vessel outline, including the plate configuration and crane girder. It is a free-standing, cylindrical steel vessel with ellipsoidal upper and lower heads. [*The containment vessel has the following design characteristics:*

Diameter: 130 feet
Height: 215 feet 4 inches
Design Code: ASME III, Div. 1
Material: SA738, Grade B
Design Pressure: 59 psig
Design Temperature: 300°F
Design External Pressure: 2.9 psid

The wall thickness in most of the cylinder is 1.75 inches. The wall thickness of the lowest course of the cylindrical shell is increased to 1.875 inches to provide margin in the event of corrosion in the embedment transition region. The thickness of the heads is 1.625 inches.]* The heads are ellipsoidal with a major diameter of 130 feet and a height of 37 feet, 7.5 inches.

The containment vessel includes the shell, hoop stiffeners and crane girder, equipment hatches, personnel airlocks, penetration assemblies, and miscellaneous appurtenances and attachments. The design for external pressure is dependent on the spacing of the hoop stiffeners and crane girder, which are shown on Figure 3.8.2-1. [*The spacing between each pair of ring supports (the bottom*

*NRC Staff approval is required prior to implementing a change in this information; see DCD Introduction Section 3.5.

flange of the crane girder, the hoop stiffeners, and the concrete floor at elevation 100′-0″) is less than 50 feet, 6 inches.]*

The polar crane is designed for handling the reactor vessel head during normal refueling. The crane girder and wheel assemblies are designed to support a special trolley to be installed in the event of steam generator replacement.

The containment vessel supports most of the containment air baffle as described in subsection 3.8.4. The air baffle is arranged to permit inspection of the exterior surface of the containment vessel. Steel plates are welded to the dome as part of the water distribution system, described in subsection 6.2.2. The polar crane system is described in subsection 9.1.5.

3.8.2.1.2 Containment Vessel Support

The bottom head is embedded in concrete, with concrete up to elevation 100′ on the outside and to the maintenance floor at elevation 107′-2″ on the inside. The containment vessel is assumed as an independent, free-standing structure above elevation 100′. The thickness of the lower head is the same as that of the upper head. There is no reduction in shell thickness even though credit could be taken for the concrete encasement of the lower head.

Vertical and lateral loads on the containment vessel and internal structures are transferred to the basemat below the vessel by shear studs, friction, and bearing. The shear studs are not required for design basis loads. They provide additional margin for earthquakes beyond the safe shutdown earthquake.

Seals are provided at the top of the concrete on the inside and outside of the vessel to prevent moisture between the vessel and concrete. A typical cross section design of the seal is presented in Figure 3.8.2-8, sheets 1 and 2.

3.8.2.1.3 Equipment Hatches

Two equipment hatches are provided. One is at the operating floor (elevation 135′-3″) with an inside diameter of 16 feet. The other is at floor elevation 107′-2″ to permit grade-level access into the containment, with an inside diameter of 16 feet. The hatches, shown in Figure 3.8.2-2, consist of a cylindrical sleeve with a pressure seated dished head bolted on the inside of the vessel. The containment internal pressure acts on the convex face of the dished head and the head is in compression. The flanged joint has double O-ring or gum-drop seals with an annular space that may be pressurized for leak testing the seals. Each of the two equipment hatches is provided with an electrically powered hoist and with a set of hardware, tools, equipment and a self-contained power source for moving the hatch from its storage location and installing it in the opening.

3.8.2.1.4 Personnel Airlocks

Two personnel airlocks are provided, one located adjacent to each of the equipment hatches. Figure 3.8.2-3 shows the typical arrangement. Each personnel airlock has about a 10-foot external diameter to accommodate a door opening of width 3 feet 6 inches and height 6 feet 8 inches. The airlocks are long enough to provide a clear distance of 8 feet, which is not impaired by the swing

*NRC Staff approval is required prior to implementing a change in this information; see DCD Introduction Section 3.5.

of the doors within the lock. The airlocks extend radially out from the containment vessel through the shield building. They are supported by the containment vessel.

Each airlock has two double-gasketed, pressure-seated doors in series. The doors are mechanically interlocked to prevent simultaneous opening of both doors and to allow one door to be completely closed before the second door can be opened. The interlock can be bypassed by using special tools and procedures.

3.8.2.1.5 Mechanical Penetrations

The mechanical penetrations consist of the fuel transfer penetration and mechanical piping penetrations and are listed in Table 6.2.3-1.

Figure 3.8.2-4, sheet 1, shows typical details for the main steam penetration. This includes bellows to minimize piping loads applied to the containment vessel and a guardpipe to protect the bellows and to prevent overpressurization of the containment annulus in a postulated pipe rupture event. Similar details are used for the feedwater penetration.

Figure 3.8.2-4, sheet 2, shows typical details for the startup feedwater penetration. This includes a guardpipe to prevent overpressurization of the containment annulus in a postulated pipe rupture event. Similar details are used for the steam generator blowdown penetration.

Figure 3.8.2-4, sheet 3, shows typical details for the normal residual heat removal penetration. Similar details are used for other penetrations below elevation 107′-2″ where there is concrete inside the containment vessel. The flued head is integral with the process piping and is welded to the containment sleeve. The welds are accessible for in-service inspection. The containment sleeve is separated from the concrete by compressible material.

Figure 3.8.2-4, sheet 4 shows typical details for the other mechanical penetrations. These consist of a sleeve welded to containment with either a flued head welded to the sleeve (detail A), or with the process piping welded directly to the sleeve (detail B). Flued heads are used for stainless piping greater than 2 inches in nominal diameter and for piping with high operating temperatures.

Design requirements for the mechanical penetrations are as follows:

- Design and construction of the process piping follow ASME, Section III, Subsection NC. Design and construction of the remaining portions follow ASME Code, Section III, Subsection NE. The boundary of jurisdiction is according to ASME Code, Section III, Subsection NE.

- Penetrations are designed to maintain containment integrity under design basis accident conditions, including pressure, temperature, and radiation.

- Guard pipes are designed for pipe ruptures as described in subsection 3.6.2.1.1.4.

- Bellows are stainless steel or nickel alloy and are designed to accommodate axial and lateral displacements between the piping and the containment vessel. These displacements include

thermal growth of the main steam and feedwater piping during plant operation, relative seismic movements, and containment accident and testing conditions. Cover plates are provided to protect the bellows from foreign objects during construction and operation. These cover plates are removable to permit in-service inspection.

The fuel transfer penetration, shown in Figure 3.8.2-4, sheet 5, is provided to transfer fuel between the containment and the fuel handling area of the auxiliary building. The fuel transfer tube is welded to the penetration sleeve. The containment boundary is a double-gasketed blind flange at the refueling canal end. The expansion bellows are not a part of the containment boundary. Rather, they are water seals during refueling operations and accommodate differential movement between the containment vessel, containment internal structures, and the auxiliary building.

3.8.2.1.6 Electrical Penetrations

Figure 3.8.2-4, sheet 6, shows a typical 18-inch-diameter electrical penetration. The penetration assemblies consist of conductor modules (or medium voltage cable modules in a similar 18-inch-diameter penetration) passing through a bulkhead attached to the containment nozzle. Electrical design of these penetrations is described in subsection 8.3.1.1.6.

Electrical penetrations are designed to maintain containment integrity under design basis accident conditions, including pressure, temperature, and radiation. Double barriers permit testing of each assembly to verify that containment integrity is maintained. Design and testing is according to IEEE Standard 317-83 and IEEE Standard 323-74.

3.8.2.2 Applicable Codes, Standards, and Specifications

[*The containment vessel is designed and constructed according to the 2001 edition of the ASME Code, Section III, Subsection NE, Metal Containment, including the 2002 Addenda. Stability of the containment vessel and appurtenances is evaluated using ASME Code, Case N-284-1, Metal Containment Shell Buckling Design Methods, Class MC, Section III, Division 1, as published in the 2001 Code Cases, 2001 Edition, July 1, 2001.*]*

Structural steel nonpressure parts, such as ladders, walkways, and handrails are designed to the requirements for steel structures defined in subsection 3.8.4.

Section 1.9 discusses compliance with the Regulatory Guides and the Standard Review Plans.

3.8.2.3 Loads and Load Combinations

Table 3.8.2-1 summarizes the design loads, load combinations and ASME Service Levels. They meet the requirements of the ASME Code, Section III, Subsection NE. The containment vessel is designed for the following loads specified during construction, test, normal plant operation and shutdown, and during accident conditions:

D Dead loads or their related internal moments and forces, including any permanent piping and equipment loads

*NRC Staff approval is required prior to implementing a change in this information; see DCD Introduction Section 3.5.

L Live loads or their related internal moments and forces, including crane loads

P_o Operating pressure loads during normal operating conditions resulting from pressure variations either inside or outside containment

T_o Thermal effects and loads during normal operating conditions, based on the most critical transient or steady-state condition

R_o Piping and equipment reactions during normal operating conditions, based on the most critical transient or steady-state condition

W Loads generated by the design wind on the portion of the containment vessel above elevation 132′, as described in subsection 3.3.1.1

E_s Loads generated by the safe shutdown earthquake (SSE) as described in Section 3.7

W_t Loads generated by the design tornado on the portion of the containment vessel above elevation 132′, as described in subsection 3.3.2

P_t Test pressure

P_d Containment vessel design pressure that exceeds the pressure load generated by the postulated pipebreak accidents and passive cooling function

P_e Containment vessel external pressure

T_a Thermal loads under thermal conditions generated by the postulated break or passive cooling function and including T_o. This includes variations around the shell due to the surrounding buildings and maldistribution of the passive containment cooling system water.

R_a Piping and equipment reactions under thermal conditions generated by the postulated break, as described in Section 3.6, and including R_o

Y_r Loads generated by the reaction on the broken high-energy pipe during the postulated break, as described in Section 3.6

Y_j Jet impingement load on a structure generated by the postulated break, as described in Section 3.6

Y_m Missile impact load on a structure generated by or during the postulated break, as from pipe whipping, as described in Section 3.6

Note that loads associated with flooding of the containment below elevation 107′ are resisted by the concrete structures and not by the containment vessel.

3.8.2.4 Design and Analysis Procedures

The design and analysis procedures for the containment vessel are according to the requirements of the ASME Code, Section III, Subsection NE.

The analyses are summarized in Table 3.8.2-4. The detailed analyses will use a series of general-purpose finite element, axisymmetric shell and special purpose computer codes to conduct such analyses. Code development, verification, validation, configuration control, and error reporting and resolution are according to the Quality Assurance requirements of Chapter 17.

3.8.2.4.1 Analyses for Design Conditions

3.8.2.4.1.1 Axisymmetric Shell Analyses

The containment vessel is modelled as an axisymmetric shell and analyzed using the ANSYS computer program. A model used for static analyses is shown in Figure 3.8.2-6.

Dynamic analyses of the axisymmetric model, which is similar to that shown in Figure 3.8.2-6, are performed to obtain frequencies and mode shapes. These are used to confirm the adequacy of the containment vessel stick model as described in subsection 3.7.2.3.2. Stress analyses are performed for each of the following loads:

- Dead load
- Internal pressure
- Seismic
- Polar crane wheel loads
- Wind loads
- Thermal loads

The seismic analysis performed envelope all soil conditions. The seismic analysis is discussed in Section 3.7. The torsional moments, which include the effects of the eccentric masses, are increased to account for accidental torsion and are evaluated in a separate calculation.

The results of these load cases are factored and combined in accordance with the load combinations identified in Table 3.8.2-1. These results are used to evaluate the general shell away from local penetrations and attachments, that is, for areas of the shell represented by the axisymmetric geometry. The results for the polar crane wheel loads are also used to establish local shell stiffnesses for inclusion in the containment vessel stick model described in subsection 3.7.2.3. The results of the analyses and evaluations are included in the containment vessel design report.

Design of the containment shell is primarily controlled by the internal pressure of 59 psig. The meridional and circumferential stresses for the internal pressure case are shown in Figure 3.8.2-5. The most highly stressed regions for this load case are the portions of the shell away from the hoop stiffeners and the knuckle region of the top head. In these regions the stress intensity is close to the allowable for the design condition.

Major loads that induce compressive stresses in the containment vessel are internal and external pressure and crane and seismic loads. Each of these loads and the evaluation of the compressive stresses are discussed below.

- Internal pressure causes compressive stresses in the knuckle region of the top head and in the equipment hatch covers. The evaluation methods are similar to those discussed in subsection 3.8.2.4.2 for the ultimate capacity.

- Evaluation of external pressure loads is performed in accordance with ASME Code, Section III, Subsection NE, Paragraph NE-3133.

- Crane wheel loads due to crane dead load, live load, and seismic loads result in local compressive stresses in the vicinity of the crane girder. These are evaluated in accordance with ASME Code, Case N-284.

- Overall seismic loads result in axial compression and tangential shear stresses at the base of the cylindrical portion. These are evaluated in accordance with ASME Code, Case N-284.

The bottom head is embedded in the concrete base at elevation 100 feet. This leads to circumferential compressive stresses at the discontinuity under thermal loading associated with the design basis accident. The containment vessel design includes a Service Level A combination in which the vessel above elevation 107′-2″ is specified at the design temperature of 300°F and the portion of the embedded vessel (and concrete) below elevation 100 feet is specified at a temperature of 70°F. The temperature profile for the vessel is linear between these elevations. Containment shell buckling close to the base is evaluated against the criteria of ASME Code, Case N-284.

Revision 1 of Code Case N-284 is used for the evaluation of the containment shell and equipment hatches.

3.8.2.4.1.2 Local Analyses

The penetrations and penetration reinforcements are designed in accordance with the rules of ASME III, Subsection NE. The design of the large penetrations for the two equipment hatches and the two airlocks use the results of finite element analyses which consider the effect of the penetration and its dynamic response.

The personnel airlocks and equipment hatches are modeled in a 3-D shell finite element model of the containment. The bottom of the model is fixed at elevation 100′ where the containment vessel is embedded in concrete.

Static analyses are performed using the finite element model shown in Figure 3.7.2-7 for internal pressure, dead load (including the polar crane in the parked position), thermal loads and seismic loads. The global seismic loads are applied as equivalent static accelerations using the maximum accelerations from the nuclear island stick model given in DCD Table 3.7.2-6. The amplified local responses are included separately for each of the four penetrations. Local seismic axial and rotational accelerations about both horizontal and vertical axes are applied based on the maximum

amplified response determined from a time history analysis on a less refined dynamic model with seismic time histories at elevation 100′.

Stresses are evaluated against the stress intensity criteria of ASME Section III, Subsection NE for the load combinations described in Table 3.8.2-1. Stability is evaluated against ASME Code Case N-284. Local stresses in the regions adjacent to the major penetrations are evaluated in accordance with paragraph 1711 of the code case. Stability is not evaluated in the reinforced penetration neck and insert plate which are substantially stiffer than the adjacent shell.

3.8.2.4.2 Evaluation of Ultimate Capacity

The capacity of the containment vessel has been calculated for internal pressure loads for use in the probabilistic risk assessment analyses and severe accident evaluations. Each element of the containment vessel boundary was evaluated to estimate the maximum pressure at an ambient temperature of 100°F corresponding to the following stress and buckling criteria:

- Deterministic severe accident pressure capacity corresponding to ASME Service Level C limits on stress intensity, ASME paragraph NE-3222, and ASME Code Case N-284 for buckling of the equipment hatch covers, and 60 percent of critical buckling for the top head. The deterministic severe accident pressure capacity corresponds to the approach in SECY 93-087, to maintain a reliable leak-tight barrier approximately 24 hours following the onset of core damage under the more likely severe accident challenges. This approach was approved by the Nuclear Regulatory Commission as outline in the Staff Requirements Memorandum on SECY-93-087 - Policy, Technical, and Licensing Issues Pertaining to Evolutionary and Advanced Light Water Reactor (ALWR) Designs, Dated July 21, 1993.

- Best estimate capacity corresponding to gross membrane yield at the ASME-specified minimum yield stress (SA738, Grade B, yield stress = 60 ksi, ultimate stress = 85 ksi), and critical buckling for the equipment hatch covers and top head.

The results are shown in Table 3.8.2-2. The analyses at a temperature of 100°F are described in the following paragraphs for each element. The critical regions identified in this table are then examined further for their response at higher temperatures. This results in the best-estimate capacity based on the ASME-specified minimum yield properties. The evaluation considered the containment boundary elements including:

- Cylindrical shell
- Top and bottom heads
- Equipment hatches and covers
- Personnel airlocks
- Mechanical and electrical penetrations

The evaluation identified the most likely failure mode to be that associated with gross yield of the cylindrical shell. Loss of containment function would be expected to occur because the large post-yield deflections would lead to local failures at penetrations, bellows, or other local discontinuities.

3.8.2.4.2.1 Tensile Stress Evaluation of Shell

Results of the axisymmetric analyses of the cylinder and top head described in subsection 3.8.2.4.1 for dead load and internal pressure were evaluated to determine the pressure at which stresses reach yield at an ambient temperature of 100°F. The analyses assume the shell is fixed at elevation 100′, where the bottom head is embedded in concrete. The steel bottom head is identical to the top head and has a pressure capability greater than the top head due to the additional strength of the embedment concrete.

The allowable stress intensity under Service Level C loads is equal to yield. This corresponds to an internal pressure of 135 psig. The critical section is the cylinder, where the general primary membrane stress intensity is greatest.

The best-estimate yield analysis uses the von Mises criterion to establish yield rather than the more conservative ASME stress intensity approach. This increases the yield stress by about 15 percent for the cylinder, where the longitudinal stress is equal to one-half of the hoop stress resulting in first yield at an internal pressure of 155 psig. At this pressure, hoop stresses in the cylinder reach yield. The radial deflection is about 1.6 inches. As pressure increases further, large deflections occur. For a material such as SA738, where the yield plateau extends from a strain of 0.2 percent to 0.6 percent, deflections would increase to 4.8 inches at yield without a substantial increase in pressure. Strain hardening would then permit a further increase in pressure with large radial deflections, as described in subsection 3.8.2.4.2.6.

3.8.2.4.2.2 Buckling Evaluation of Top Head

The top head has a radius-to-height ratio of 1.728. This is not as shallow as most ellipsoidal or torispherical heads, which typically have a radius-to-height ratio of 2. The ratio was specifically selected to minimize the local stresses and buckling in the knuckle region due to internal pressure. As the ratio decreases, the magnitude of compressive stresses in the knuckle region decreases; for a radius-to-height ratio of 1.4 or smaller, there are no compressive stresses and therefore there is no potential for buckling.

Theoretical Buckling Capacity

The top head was analyzed using the BOSOR-5 computer code (Reference 1). This code permits consideration of both large displacements and nonlinear material properties. It calculates shell stresses and checks stability at each load step. The analysis included a portion of the cylinder with a thickness of 1.625 inches. In this analysis, yield of the cylinder started at a pressure of 144 psig using elastic – perfectly plastic material properties, a yield stress of 60 ksi, and the von Mises yield criterion. Yield of the top of the crown started at an internal pressure of 146 psig. Yield of the knuckle region started at 152 psig. A theoretical plastic buckling pressure of 174 psig was determined. At this pressure, the maximum effective prebuckling strain was 0.23 percent in the knuckle region where buckling occurred and 2.5 percent at the crown. The maximum deflection at the crown was 15.9 inches. A similar analysis was performed using nonlinear material properties considering the effects of residual stresses; buckling did not occur in this analysis, and failure would occur once strains at the crown reach ultimate. The failure mode was found to be an

axisymmetric plastic collapse resulting from excessive vertical displacements at the crown. The maximum displacement was 43 inches at 195 psig.

Predicted Pressure Capacity

The actual buckling capacity may be lower than the theoretical buckling capacity because of effects not included in the analysis such as imperfections and residual stresses. This is considered by the use of capacity reduction factors that are based upon a correlation of theory and experiment. The capacity reduction factor for the top head was evaluated based on comparisons of BOSOR-5 analyses against test results of ellipsoidal and torispherical heads. This evaluation is described below and concludes that no reduction in capacity need be considered; that is, a capacity reduction factor of 1.0 is appropriate.

The knuckle region of ellipsoidal and torispherical heads is subjected to meridional tension and circumferential compression. The meridional tension tends to stabilize the knuckle region and reduces its sensitivity to imperfection. The radius-to-height ratio of 1.728 of the AP1000 head results in a larger ratio of meridional tension to circumferential compression than on shallower heads, further reducing the sensitivity to imperfection.

Welding Research Council Bulletin 267 (Reference 22) shows a comparison of BOSOR-5 predictions of buckling against the results of 20 tests of small head models. These results are summarized in Table 4 of the reference and show ratios (capacity reduction factors) of actual buckling to the BOSOR-5 prediction with an average of 1.2. Only one of the 20 cases shows a capacity reduction factor less than 1.0.

Table 3.8.2-3 shows the key parameters, test results, and BOSOR-5 predictions for two large, fabricated 2:1 torispherical heads tested and reported in NUREG/CR-4926 (Reference 23). The theoretical plastic buckling pressure predicted by BOSOR-5 represents initial buckling based on actual material properties. The initial buckling did not cause failure for either of the tests, and test pressure continued to increase until rupture occurred in the spherical cap. The collapse pressures were three to four times the initial buckling pressures.

- **Test Head 1** – The test result of 58 psig is 79 percent of the predicted theoretical plastic buckling pressure of 74 psig. Many of the buckles occurred directly on the meridional weld seams of the knuckle. The knuckle welds were noticeably flatter than the corresponding welds of the Test 2 head. The as-built configuration extended inside the theoretical shape at some of the meridional weld seams and was most pronounced at the location of the first observed buckle. Model 1 exceeded the tolerances for formed heads specified for containment vessels in NE-4222.2 of ASME, Section III, Subsection NE.

- **Test Head 2** – The test result of 106 psi is 100 percent of the BOSOR-5 predicted theoretical plastic buckling pressure. For test head 2, the welds had no noticeable flat spots and there was a smooth transition between the sphere and knuckle sections. Test head 2 was well within the Code allowable deviations.

The low-capacity reduction factor of 0.79 for test head 1 is attributed to excessive imperfections associated with the fabrication of relatively thin plate (0.196 inch). These imperfections were

visible and were outside the tolerances permitted by the ASME Code. The results of test head 1 are therefore not considered applicable to the AP1000. The results of test head 2 and of the small-scale models described in the Welding Research Council Bulletin support the application of a capacity reduction factor of 1.0.

The capacity of the AP1000 head was also investigated using an approach similar to that permitted in ASME Code, Case N284. This code case provides alternate rules for certain containment vessel geometries such as cylindrical shells. The theoretical elastic buckling pressure was calculated to be 536 psi using the linear elastic computer code, BOSOR-4 (Reference 24). A reduction factor (defined as the product of the capacity reduction factor and the plastic reduction factor) was established as 0.385 based on the lower bound curve of test results of 20 ellipsoidal and 28 torispherical test specimens, which also include the two large fabricated heads previously discussed. This resulted in a predicted buckling capacity of 206 psig.

The preceding paragraphs addressed incipient buckling. It is concluded that buckling would not occur prior to reaching the pressure of 174 psig predicted in the BOSOR-5 analyses. Tests indicate that pressure can be significantly increased prior to rupture after the formation of the initial buckles. Failure would occur when local strains reach ultimate either close to a local buckle in the knuckle or at the center of the crown. The best estimate capacity of the head is taken as the theoretical plastic buckling pressure of 174 psig predicted in the BOSOR-5 analyses.

The deterministic severe accident pressure capacity is taken as 60 percent of critical buckling. This is consistent with the safety factor for Service Level C in ASME Code, Case N-284 and results in a containment head capacity of 104 psig.

3.8.2.4.2.3 Equipment Hatches

SECY 93-087 permits evaluation of certain severe accident scenarios against ASME Service Level C limits. The equipment hatch covers were evaluated for buckling against ASME paragraph NE-3222 and according to ASME Code, Case N-284. Use of ASME Code, Case N-284 for this application was confirmed to be appropriate by ASME. The containment internal pressure acts on the convex face of the dished head and the hatch covers are in compression under containment internal pressure loads. The critical buckling capacity is based on classical buckling capacities reduced by capacity reduction factors to account for the effects of imperfections and plasticity. These capacity reduction factors are based on test data and are generally lower-bound values for the tolerances specified in the ASME Code.

The critical buckling pressure is 211 psig for the 16-foot-diameter hatch at an ambient temperature of 100°F. For the Service Level C limits in accordance with paragraph NE 3222, a safety factor of 2.50 is specified, resulting in capabilities of 84 psig (16-foot-diameter). For the Service Level C limits in accordance with Code Case N284, a safety factor of 1.67 is specified, resulting in capabilities of 126 psig (16-foot-diameter).

Typical gaskets have been tested for severe accident conditions as described in NUREG/CR-5096 (Reference 25). The gaskets for the AP1000 will be similar to those tested with material such as Presray EPDM E 603. For such gaskets the onset of leakage occurred at a temperature of about 600°F.

3.8.2.4.2.4 Personnel Airlocks

The capacity of the personnel airlocks was determined by comparing the airlock design to that tested and reported in NUREG/CR-5118 (Reference 3). Critical parameters are the same, so the results of the test apply directly. In the tests the inner door and end bulkhead of the airlock withstood a maximum pressure of 300 psig at 400°F. The capacity of the airlock is therefore at least 300 psig at ambient temperature. The maximum pressure corresponding to Service Level C is conservatively estimated by reducing this capacity in the ratio of the minimum specified material yield to ultimate.

3.8.2.4.2.5 Mechanical and Electrical Penetrations

Subsections 3.8.2.1.3 through 3.8.2.1.6 describe the containment penetrations. Penetration reinforcement is designed following the area replacement method of the ASME Code. The insert plates and sleeves permit development of the hoop tensile yield stresses predicted as the limiting capacity in subsection 3.8.2.4.1. Capacities of the equipment hatch covers are discussed in subsection 3.8.2.4.2.3 and of the personnel airlocks in subsection 3.8.2.4.2.4.

Mechanical penetrations welded directly to the containment vessel are generally piping systems with design pressures greater than that of the containment vessel. Thicknesses of the flued head or end plate are established based on piping support loads or stiffness requirements. The capacities of these penetrations are greater than the capacity of the containment vessel cylinder.

Mechanical penetrations for the large-diameter high-energy lines, such as the main steam and feedwater piping, include expansion bellows. The piping and flued head have large pressure capability. The response of expansion bellows to severe pressure and deformations is described in NUREG/CR-5561 (Reference 4). The bellows can withstand large pressure loading but may tear once the containment vessel deflection becomes large. Testing reported in NUREG/CR-6154 (Reference 26) has shown that the bellows remain leaktight even when subjected to large deflections sufficient to fully compress the bellows. Such large deflections do not occur as long as the containment vessel remains elastic. As described in subsection 3.8.2.4.2.6, the radial deflection of the shell increases substantially once the containment cylinder yields. The resulting deflections are assumed to cause loss of containment function. The containment penetration bellows are designed for a pressure of 90 psig at design temperature within Service Level C limits, concurrent with the relative displacements imposed on the bellows when the containment vessel is pressurized to these magnitudes.

Electrical penetrations have a pressure boundary consisting of the sleeve and an end plate containing a series of modules. The electrical pressure boundary is designed and built to the requirements of the ASME Code, Section III, Class MC, Subsection NE. The pressure capacity of these elements is large and is greater than the capacity of the containment vessel cylinder at temperatures up to the containment design temperature. Electrical penetration assemblies are also designed to satisfy ASME Service Level C stress limits under a pressure of 90 psig at design temperature. Tests at pressures and temperatures representative of severe accident conditions are described in NUREG/CR-5334 (Reference 5), where typical nuclear industry penetrations were irradiated, aged, then tested. One design was tested to 135 psia at 700°F. Other electrical penetration assemblies were tested to 75 psia at 400°F and 155 psia at 361°F. These tests showed that the electrical penetration assemblies withstand severe accident conditions. The electrical

penetration assemblies are qualified for the containment design basis event conditions as described in Appendix 3D. The assemblies are similar to one of those tested by Sandia as reported in NUREG/CR-5334 (Reference 5). The ultimate pressure capacity of the electrical penetration assemblies is primarily determined by the temperature. The maximum temperature of the containment vessel below the operating deck during a severe accident is below the temperature at which the assemblies from the three suppliers in the Sandia tests were tested.

3.8.2.4.2.6 Material Properties

The containment vessel is designed using SA738, Grade B material. This has a specified minimum yield of 60 ksi and ultimate of 85 ksi. Test data for materials having similar chemical properties were reviewed. In a sample of 122 tests for thicknesses equaling or exceeding 1.50 inches and less than 1.75 inches, the actual yield had a mean value of 69.1 ksi with a standard deviation of 3.3 ksi. Thus, the actual yield is expected to be about 15 percent higher than the minimum yield. Membrane yield of the cylinder is predicted to occur at an internal pressure of 178 psig.

A stress-strain curve for material with chemistry similar to SA738, Grade B, indicated constant yield stress of 81.3 ksi from a strain of 0.002 to 0.006 followed by strain-hardening up to a maximum stress of 94.5 ksi at a strain of 0.079. The first portion of the strain-hardening is nearly linear, with a stress of 90 ksi at a strain of 4 percent. This strain occurs at a stress 10 percent above yield. Thus, a pressure load 10 percent higher than that corresponding to yield of the shell would result in 4 percent strain and a 31-inch radial deflection of the containment cylinder. Such a deflection is expected to cause major distress for penetrations, the air flow path, and local areas where other structures are close to the containment vessel. Loss of function is therefore assumed for the containment once gross yield of the containment cylinder occurs.

3.8.2.4.2.7 Effect of Temperature

The evaluations described in the preceding subsections are based on an ambient temperature of 100°F. Nonmetallic items, such as gaskets, are qualified to function at the design temperature. The capacity of steel elements is reduced in proportion to the reduction due to temperature in yield stress, ultimate stress, or elastic modulus. The cylinder is governed by yield stress, and elastic buckling of the hatch covers is governed by the elastic modulus. The reduction in capacity is estimated using the tables given for material properties in the ASME Code. At 400°F, the yield stress is reduced by 17 percent and the pressure capacity corresponding to gross yield is reduced from 155 to 129 psig.

3.8.2.4.2.8 Summary of Containment Pressure Capacity

The ultimate pressure capacity for containment function is expected to be associated with leakage caused by excessive radial deflection of the containment cylindrical shell. This radial deflection causes distress to the mechanical penetrations, and leakage would be expected at the expansion bellows for the main steam and feedwater piping. There is high confidence that this failure would not occur before stresses in the shell reach the minimum specified material yield. This is calculated to occur at a pressure of 155 psig at ambient temperature and 129 psig at 400°F. Failure would be more likely to occur at a pressure about 15 percent higher based on expected actual material properties.

The deterministic severe accident pressure that can be accommodated according to the ASME Service Level C stress intensity limits and using a factor of safety of 1.67 for buckling of the top head is determined by the capacity of the 16-foot-diameter equipment hatch cover and the ellipsoidal head. The maximum capacity of the hatch cover, calculated according to ASME paragraph NE-3222, Service Level C, is 84 psig at an ambient temperature of 100°F and 81 psig at 300°F. When calculated in accordance with ASME Code, Case N-284, Service Level C, the maximum capacity is 126 psig at an ambient temperature of 100°F and 121 psig at 300°F. The maximum capacity of the ellipsoidal head is 104 psig at 100°F and 91 psig at 300°F.

The maximum pressure that can be accommodated according to the ASME Service Level C stress intensity limits, excluding evaluation of instability, is determined by yield of the cylinder and is 135 psig at an ambient temperature of 100°F and 117 psig at 300°F. This limit is used in the evaluations required by 10 CFR 50.34(f).

3.8.2.5 Structural Criteria

The containment vessel is designed, fabricated, installed, and tested according to the ASME Code, Section III, Subsection NE, and will receive a code stamp.

Stress intensity limits are according to ASME Code, Section III, Paragraph NE-3221 and Table NE-3221-1. [*Critical buckling stresses are checked according to the provisions of ASME Code, Section III, Paragraph NE-3222, or ASME Code Case N-284.*]*

3.8.2.6 Materials, Quality Control, and Special Construction Techniques

Materials for the containment vessel, including the equipment hatches, personnel locks, penetrations, attachments, and appurtenances meet the requirements of NE-2000 of the ASME Code. The basic containment material is SA738, Grade B, plate. The procurement specification for the SA738, grade B, plate includes supplemental requirements S1, Vacuum Treatment and S20, Maximum Carbon Equivalent for Weldability. This material has been selected to satisfy the lowest service metal temperature requirement of -15°F. This temperature is established by analysis for the portion of the vessel exposed to the environment when the minimum ambient air temperature is -40°F. Impact test requirements are as specified in NE-2000.

The containment vessel is coated with an inorganic zinc coating, except for those portions fully embedded in concrete. The inside of the vessel below the operating floor and up to 8 feet above the operating floor also has a phenolic top coat. Below elevation 100′ the vessel is fully embedded in concrete with the exception of the few penetrations at low elevations (see Figure 3.8.2-4, sheet 3 of 6, for typical details). Embedding the steel vessel in concrete protects the steel from corrosion.

The AP1000 configuration is shown in the general arrangement figures in Section 1.2 and in Figure 3.8.2-1. The exterior of the vessel is embedded at elevation 100′ and concrete is placed against the inside of the vessel up to the maintenance floor at elevation 107′-2″. Above this elevation the inside and outside of the containment vessel are accessible for inspection of the coating. The vessel is coated with an inorganic zinc primer to a level just below the concrete.

*NRC Staff approval is required prior to implementing a change in this information; see DCD Introduction Section 3.5.

Seals are provided at the surface of the concrete inside and outside the vessel so that moisture is not trapped next to the steel vessel just below the top of the concrete. The seal on the inside accommodates radial growth of the vessel due to pressurization and heatup.

The plate thickness for the first course (elevation 104′-1.5″ to 116′-10″) of the cylinder is 1.875 inches, which is 1/8-inch thicker than the rest of the vessel. This provides margin in the event there would be any corrosion in the transition region despite the coatings and seals described previously. Equivalent margin is available for the 1.625-inch-thick bottom head in the transition region (elevation 100′ to 104′-1.5″). The plate thickness for the head is a constant thickness and is established by the stresses in the knuckle. As a result, the pressure stresses in the transition zone are well below the allowable stress, providing margin in the event of corrosion in this region.

The quality control program involving welding procedures, erection tolerances, and nondestructive examination of shop- and field-fabricated welds conforms with Subsections NE-4000 and NE-5000 of the ASME Code. The containment vessel is designed to permit its construction using large subassemblies. These subassemblies consist of the two heads and three ring sections. Each ring section comprises three or four courses of plates and is approximately 38 to 51 feet high. These are assembled in an area near the final location, using plates fabricated in a shop facility.

3.8.2.7 Testing and In-Service Inspection Requirements

Testing of the containment vessel and the pipe assemblies forming the pressure boundary within the containment vessel will be according to the provisions of NE-6000 and NC-6000, respectively.

Subsection 6.2.5 describes leak-rate testing of the containment system including the containment vessel.

In-service inspection of the containment vessel will be performed.

3.8.3 Concrete and Steel Internal Structures of Steel Containment

3.8.3.1 Description of the Containment Internal Structures

The containment internal structures are those concrete and steel structures inside (not part of) the containment pressure boundary that support the reactor coolant system components and related piping systems and equipment. The concrete and steel structures also provide radiation shielding. The containment internal structures are shown on the general arrangement drawings in Section 1.2. The containment internal structures consist of the primary shield wall, reactor cavity, secondary shield walls, in-containment refueling water storage tank (IRWST), refueling cavity walls, operating floor, intermediate floors, and various platforms. The polar crane girders are considered part of the containment vessel. They are described in subsection 3.8.2.

Component supports are those steel members designed to transmit loads from the reactor coolant system to the load-carrying building structures. The component configuration is described in this subsection including the local building structure backing up the component support. The design and construction of the component supports are described in subsection 5.4.10.

The containment internal structures are designed using reinforced concrete and structural steel. At the lower elevations conventional concrete and reinforcing steel are used, except that permanent steel forms are used in some areas in lieu of removable forms based on constructibility considerations. These steel form modules (liners) consist of plate reinforced with angle stiffeners and tee sections, as shown in Figure 3.8.3-16. The angles and the tee sections are on the concrete side of the plate. Welded studs, or similar embedded steel elements, are attached on the concrete face of the permanent steel form where surface attachments transfer loads into the concrete. Where these surface attachments are seismic Category I, the portion of the steel form module transferring the load into the concrete is classified as seismic Category I.

Walls and floors are concrete filled steel plate structural modules. The walls are supported on the mass concrete containment internal structures basemat with the steel surface plate extending down to the concrete floor on each side of the wall. The steel surface plates of the structural modules provide reinforcement in the concrete. The structural modules are anchored to the base concrete by mechanical connections welded to the steel plate or by lap splices where the reinforcement overlaps shear studs on the steel plate as shown in Figure 3.8.3-8. Figure 3.8.3-1 shows the location of the structural modules. Figures 3.8.3-2 and 3.8.3-15 show the typical structural configuration of the wall modules. A typical floor module is shown in Figure 3.8.3-3 and also in Figure 3.8.3-16 combined with the liner module. These structural modules are structural elements built up with welded steel structural shapes and plates. Concrete is used where required for shielding, but reinforcing steel is not normally used.

Walls and floors exposed to water during normal operation or refueling are constructed using stainless steel plates.

3.8.3.1.1 Reactor Coolant Loop Supports

3.8.3.1.1.1 Reactor Vessel Support System

The reactor vessel is supported by four supports located under the cold legs, which are spaced 90 degrees apart in the primary shield wall. The supports are designed to provide for radial thermal growth of the reactor coolant system, including the reactor vessel, but they prevent the vessel from lateral and torsional movement. The loads are carried by the reactor vessel supports to embedded steel plates of the CA-04 structural module which forms the inside face of the primary shield concrete. Figure 3.8.3-4 shows the reactor vessel supports. Sheet 4 of Figure 3.8.3-14 shows the CA-04 structural module.

3.8.3.1.1.2 Steam Generator Support System

The steam generator vertical support consists of a single vertical column extending from the steam generator compartment floor to the bottom of the steam generator channel head. The column is constructed of heavy plate sections and is pinned at both ends to permit unrestricted radial displacement of the steam generator during plant heatup and cooldown. The location of this column is such that it will allow full access to the steam generator for routine maintenance activities. It is located a sufficient distance away from the reactor coolant pump motors to permit pump maintenance and in-service inspection.

The lower steam generator horizontal support is located at the top of the vertical column. It consists of a tension/compression strut oriented approximately perpendicular to the hot leg. The strut is pinned at both the wall bracket and the vertical column to permit movement of the generator during plant heatup and cooldown.

The upper steam generator horizontal support in the direction of the hot leg is located on the upper shell just above the transition cone. It consists of two large hydraulic snubbers oriented parallel with the hot leg centerline. One snubber is mounted on each side of the generator on top of the steam generator compartment wall. The hydraulic snubbers are valved to permit steam generator movement for thermal transition conditions, and to "lock-up" and act as rigid struts under dynamic loads.

The upper steam generator horizontal support in the direction normal to the hot leg is located on the lower shell just below the transition cone. It consists of two rigid tension/compression struts oriented perpendicular to the hot leg. The two rigid struts are mounted on the steam generator compartment wall at the elevation of the operating deck. The steam generator loads are transferred to the struts and snubbers through trunnions on the generator shell. Figure 3.8.3-5 shows the steam generator supports.

The steam generator supports are anchored using anchor bolts or steel weldments embedded in the concrete, designed in accordance with Appendix B of ACI 349. The lower portion of the column pedestal, embedded in the concrete, as shown on sheet 1 of Figure 3.8.3-5, transfers the vertical load into the reinforced concrete basemat. The lower and intermediate horizontal supports are located so that the loads are transferred into the plane of the adjacent floor. The upper supports are located so that the loads are transferred into the plane of the steam generator compartment walls.

3.8.3.1.1.3 Reactor Coolant Pump Support System

Because the reactor coolant pumps are integrated into the steam generator channel head, they do not have individual supports. They are supported by the steam generators.

3.8.3.1.1.4 Pressurizer Support System

The pressurizer is supported by four columns mounted from the pressurizer compartment floor. A lateral support is provided at the top of the columns. This lateral support consists of eight struts connecting it to the pressurizer compartment walls. A lateral support is also provided on the upper portion of the pressurizer. This lateral support consists of a ring girder around the pressurizer and eight struts connecting it to the pressurizer compartment walls. Figure 3.8.3-6 shows the pressurizer supports.

3.8.3.1.2 Containment Internal Structures Basemat

The containment internal structures basemat is the reinforced concrete structure filling the bottom head of the containment vessel. It extends from the bottom of the containment vessel head at elevation 66′-6″ up to the bottom of the structural modules that start between elevations 71′-6″ and 103′-0″. The basemat includes rooms as shown on Figure 1.2-5. The primary shield wall and reactor cavity extend from elevation 71′-6″ to elevation 107′-2″. They provide support for the

reactor vessel and portions of the secondary shield walls and refueling cavity walls. The general arrangement drawings in Section 1.2 show the location and configuration of the primary shield wall and reactor cavity. The walls of the primary shield, the steam generator compartment and the CVS room are structural modules as shown in Figure 3.8.3-1. The rest of the basemat is reinforced concrete.

3.8.3.1.3 Structural Wall Modules

Structural wall modules are used for the primary shield wall around the reactor vessel, the wall between the vertical access and the CVS room, secondary shield walls around the steam generators and pressurizer, for the east side of the in-containment refueling water storage tank, and for the refueling cavity. The general arrangement drawings in Section 1.2 show the location and configuration. Locations of the structural modules are shown in Figure 3.8.3-1. Isometric views of the structural modules are shown in Figure 3.8.3-14. The secondary shield walls are a series of walls that, together with the refueling cavity wall, enclose the steam generators. Each of the two secondary shield wall compartments provides support and houses a steam generator and reactor coolant loop piping. The in-containment refueling water storage tank is approximately 30 feet high. The floor elevation of this tank is 103′-0″. The tank extends up to about elevation 133′-3″, directly below the operating deck. On the west side, along the containment vessel wall, the tank wall consists of a stainless steel plate stiffened with structural steel sections in the vertical direction and angles in the horizontal direction. Structural steel modules, filled with concrete and forming, in part, the refueling cavity, steam generator compartment, and pressurizer compartment walls, compose the east wall. The refueling cavity has two floor elevations. The area around the reactor vessel flange is at elevation 107′-2″. The lower level is at elevation 98′-1″. The upper and lower reactor internals storage is at the lower elevation, as is the fuel transfer tube. The center line of the fuel transfer tube is at elevation 100′-5.75″.

Structural wall modules consist of steel faceplates connected by steel trusses. The primary purpose of the trusses is to stiffen and hold together the faceplates during handling, erection, and concrete placement. The nominal thickness of the steel faceplates is 0.5 inch. The nominal spacing of the trusses is 30 inches. Shear studs are welded to the inside faces of the steel faceplates. Face plates are welded to adjacent plates with full penetration welds so that the weld is at least as strong as the plate. Plates on each face of the wall module extend down to the elevation of the adjacent floor. Since the floors in the rooms each side of the wall module are at different elevations, one of the plates extends further than the other. This portion is designated on Figure 3.8.3-1 as "CA Structure Module with Single Surface Plate." A typical configuration is shown in Figure 3.8.3-8. The module functions as a wall above the upper floor level (elevation 103′-0″ in Figure 3.8.3-8). The single plate below this elevation is designed to transfer the reactions at the base of the wall into the base mat. This plate also acts as face reinforcement for the basemat. Basemat reinforcement dowels are provided at the bottom of the single plate as shown in Figure 3.8.3-8. The structural wall modules are anchored to the concrete base by reinforcing steel dowels or other types of connections embedded in the reinforced concrete below. After erection, concrete is placed between the faceplates. Typical details of the structural modules are shown in Figures 3.8.3-2, 3.8.3-8 and 3.8.3-17.

3.8.3.1.4 Structural Floor Modules

Structural floor modules are used for the operating floor at elevation 135′-3″ over the in-containment refueling water storage tank and for the 107′-2″ floor over the rooms in the containment internal structures basemat. The floors are shown on the general arrangement drawings in Section 1.2. The 107′-2″ floors and the floor above the in-containment refueling water storage tank consist of steel tee and wide flange sections, welded to horizontal steel bottom plates stiffened by transverse stiffeners. After erection, concrete is placed on top of the horizontal plate and around the structural steel section. The remaining region of the operating floor consists of a concrete slab, placed on Q decking supported by structural steel beams. The operating floor is supported by the in-containment refueling water storage tank walls, refueling cavity walls, the secondary shield walls, and steel columns originating at elevation 107′-2″. Structural details of the operating floor structural module are shown in Figure 3.8.3-3.

3.8.3.1.5 Internal Steel Framing

The region of the operating floor away from the in-containment refueling water storage tank consists of a concrete slab, placed on Q decking supported by structural steel beams. The floor at elevation 118′-6″ consists of steel grating supported by structural steel framing. In addition, a number of steel platforms are located above and below the operating floor. These platforms support either grating floors or equipment, such as piping and valves.

3.8.3.2 Applicable Codes, Standards, and Specifications

The following documents are applicable to the design, materials, fabrication, construction, inspection, or testing of the containment internal structures:

[• *American Concrete Institute (ACI), Code Requirements for Nuclear Safety Related Structures, ACI-349-01*]* (refer to subsection 3.8.4.5 for supplemental requirements)

- American Concrete Institute (ACI), ACI Detailing Manual, 1994
- American Concrete Institute (ACI), Standard Specifications for Tolerances for Concrete Construction and Materials, ACI-117-90
- American Concrete Institute (ACI), Guide to Formwork for Concrete, ACI-347-94

[• *American Institute of Steel Construction (AISC), Specification for the Design, Fabrication and Erection of Steel Safety Related Structures for Nuclear Facilities, AISC-N690-1994*]* (refer to subsection 3.8.4.5 for supplemental requirements)

- American Welding Society (AWS), Structural Welding Code, AWS D 1.1-2000
- American Welding Society (AWS), Reinforcing Steel Welding Code, AWS D 1.4-98
- National Construction Issues Group (NCIG), Visual Weld Acceptance Criteria for Structural Welding at Nuclear Power Plants, NCIG-01, Revision 2, May 7, 1985

*NRC Staff approval is required prior to implementing a change in this information; see DCD Introduction Section 3.5.

Nationally recognized industry standards, such as American Society for Testing and Materials, American Concrete Institute, and American Iron and Steel Institute, are used to specify material properties, testing procedures, fabrication, and construction methods. Section 1.9 describes conformance with the Regulatory Guides.

Welding and inspection activities for seismic Category I structural steel, including building structures, structural modules, cable tray supports, and heating, ventilating and air-conditioning (HVAC) duct supports are accomplished in accordance with written procedures and meet the requirements of the American Institute of Steel Construction (AISC N-690). The weld acceptance criteria is as defined in NCIG-01, Revision 2. The welded seams of the plates forming part of the leaktight boundary of the in-containment refueling water storage tank are examined by liquid penetrant and vacuum box after fabrication to confirm that the boundary does not leak.

3.8.3.3 Loads and Load Combinations

The loads and load combinations for the containment internal structures are the same as for other Category I structures described in subsection 3.8.4.3 and the associated tables, except for the following modifications:

Wind loads (W), tornado loads (W_t), and precipitation loads (N) are not applicable to the design of the containment internal structures because of the protection provided by the steel containment. Therefore, these loading terms have been excluded in the load combinations for the containment internal structures.

3.8.3.3.1 Passive Core Cooling System Loads

Structures are evaluated for pressure and thermal transients associated with operation of the passive core cooling system. The effects of temperatures higher than 100°F on the modulus of elasticity and yield strength of steel are considered.

The passive core cooling system and the automatic depressurization system (ADS) are described in Section 6.3. The automatic depressurization system is in part composed of two spargers that are submerged in the in-containment refueling water storage tank. The spargers provide a controlled distribution of steam flow to prevent imposing excessive dynamic loads on the tank structures. Capped vent pipes are installed in the roof of the tank on the side near the containment wall. These caps prevent debris from entering the tank from the containment operating deck, but they open under slight pressurization of the in-containment refueling water storage tank. This provides a path to vent steam released by the spargers. An overflow is provided from the in-containment refueling water storage tank to the refueling cavity to accommodate volume and mass increases during automatic depressurization system operation. Two sets of loads representing bounding operational or inadvertent transients are considered in the design of the in-containment refueling water storage tank.

- ADS_1 – This automatic depressurization system load is associated with blowdown of the primary system through the spargers when the water in the in-containment refueling water storage tank is cold and the tank is at ambient pressure. Dynamic loads on the in-containment refueling water storage tank due to automatic depressurization system operation are determined using the results from the automatic depressurization system hydraulic test as

described in subsection 3.8.3.4.2. The hydrodynamic analyses described in subsection 3.8.3.4.2 show that member forces in the walls of the in-containment refueling water storage tank are bounded by a case with a uniform pressure of 5 psi applied to the walls. The in-containment refueling water storage tank is designed for a uniform pressure of 5 psi applied to the walls. This pressure is taken as both positive and negative due to the oscillatory nature of the hydrodynamic loads. This automatic depressurization system transient is of short duration such that the concrete walls do not heat up significantly. It is combined with ambient thermal conditions. Long-term heating of the tank is bounded by the design for the ADS_2 load.

- ADS_2 – This automatic depressurization system transient considers heatup of the water in the in-containment refueling water storage tank. This may be due to prolonged operation of the passive residual heat removal heat exchanger or due to an automatic depressurization system discharge. For structural design, an extreme transient is defined starting at 50°F since this maximizes the temperature gradient across the concrete-filled structural module walls. Prolonged operation of the passive residual heat removal heat exchanger raises the water temperature from an ambient temperature of 50°F to saturation in about 4 hours, increasing to about 260°F within about 10 hours. Steaming to the containment atmosphere initiates once the water reaches its saturation temperature. The temperature transient is shown in Figure 3.8.3-7. Blowdown of the primary system through the spargers may occur during this transient and occurs prior to 24 hours after the initiation of the event. Since the flow through the sparger cannot fully condense in the saturated conditions, the pressure increases in the in-containment refueling water storage tank and steam is vented through the in-containment refueling water storage tank roof. The in-containment refueling water storage tank is designed for an equivalent static internal pressure of 5 psi in addition to the hydrostatic pressure occurring at any time up to 24 hours after the initiation of the event.

The ADS_1 and ADS_2 loads are considered as live loads. The dynamic ADS_1 load is combined with the safe shutdown earthquake by the square root sum of the squares (SRSS). ADS_2 is an equivalent static pressure which is included algebraically with other normal loads and then combined with plus/minus SSE loads.

3.8.3.3.2 Concrete Placement Loads

The steel faceplates of the structural wall modules, designed for the hydrostatic pressure of the concrete, act as concrete forms. The concrete placement loads are 1050 pounds per square foot determined in accordance with ACI-347. The bending stress in the faceplate due to this hydrostatic pressure of the concrete is approximately 13 ksi, based on the assumption of a continuous faceplate, or 20 ksi based on the assumption of simple spans. The minimum yield strength of material for the faceplates is 36 ksi for A36 steel. The stress is well below the allowable, since the plate is designed to limit the out-of-plane deflection. After the concrete has gained strength, these stresses remain in the steel; however, since the average residual stress is zero and since the concrete no longer requires hydrostatic support, the ultimate strength of the composite section is not affected, and the full steel plate is available to carry other loads as described below.

The steel plates and the concrete act as a composite section after the concrete has reached sufficient strength. The composite section resists bending moment by one face resisting tension and the other face resisting compression. The steel plate resists the tension and behaves as reinforcing steel in reinforced concrete. The composite section is underreinforced so that the steel would yield before the concrete reaches its strain limit of 0.003 in/in. As the steel faceplates are strained beyond yield to allow the composite section to attain its ultimate capacity, the modest residual bending stress from concrete placement is relieved, since the stress across the entire faceplate in tension is at yield. The small residual strain induced by the concrete placement loads is secondary and has negligible effect on the ultimate bending capacity of the composite section. The stresses in the faceplates resulting from concrete placement are therefore not combined with the stresses in the post-construction load combinations.

3.8.3.4 Analysis Procedures

This subsection describes the modelling and overall analyses of the containment internal structures, including the concrete-filled structural modules. Concrete and steel composite structures are used extensively in conventional construction. Applications include concrete slabs on steel beams and concrete-filled steel columns. Testing of concrete-filled structural modules is described in References 27 through 29 for in-plane loading and in References 30 through 33 for out-of-plane loading. The tests indicate that these composite structures behave in a manner similar to reinforced concrete structures. The initial load deflection behavior is well predicted using the gross properties of the steel and concrete. This is similar to the behavior of reinforced concrete elements where the initial stiffness is predicted by the gross properties. As the load is increased on reinforced concrete members, cracking of the concrete occurs and the stiffness decreases. The behavior of concrete and steel composite structures is similar in its trends to reinforced concrete but has a superior performance. The results of the test program by Akiyama et al. (Reference 27) indicate that concrete and steel composites similar to the structural modules have significant advantages over reinforced concrete elements of equivalent thickness and reinforcement ratios:

- Over 50 percent higher ultimate load carrying capacity
- Three times higher ductility
- Less stiffness degradation under peak cyclic loads, 30 percent for concrete and steel composites versus 65 percent for reinforced concrete

Methods of analysis for the structural modules are similar to the methods used for reinforced concrete. Table 3.8.3-2 summarizes the finite element analyses of the containment internal structures and identifies the purpose of each analysis and the stiffness assumptions for the concrete filled steel modules. For static loads the analyses use the monolithic (uncracked) stiffness of each concrete element. For thermal and dynamic loads the analyses consider the extent of concrete cracking as described in later subsections. Stiffnesses are established based on analyses of the behavior and review of the test data related to concrete-filled structural modules. The stiffnesses directly affect the member forces resulting from restraint of thermal growth. The in-plane shear stiffness of the module influences the fundamental horizontal natural frequencies of the containment internal structures in the nuclear island seismic analyses described in subsection 3.7.2. The out-of-plane flexural stiffness of the module influences the local wall

frequencies in the seismic and hydrodynamic analyses of the in-containment refueling water storage tank. Member forces are evaluated against the strength of the section calculated as a reinforced concrete section with zero strength assigned to the concrete in tension.

ACI 349, Section 9.5.2.3 specifies an effective moment of inertia for calculating the deflection of reinforced concrete beams. For loads less than the cracking moment, the moment of inertia is the gross (uncracked) inertia of the section. The cracking moment is specified as the moment corresponding to a maximum flexural tensile stress of $7.5\sqrt{f_c'}$. For large loads, the moment of inertia is that of the cracked section transformed to concrete. The effective moment of inertia provides a transition between these two dependent on the ratio of the cracking moment to the maximum moment in the beam at the stage the deflection is to be computed.

Table 3.8.3-1 summarizes in-plane shear and out-of-plane flexural stiffness properties of the 48-inch and 30-inch walls based on a series of different assumptions. The stiffnesses are expressed for unit length and height of each wall. The ratio of the stiffness to the stiffness of the monolithic case is also shown.

- Case 1 assumes monolithic behavior of the steel plate and uncracked concrete. This stiffness is supported by the test data described in References 27 through 33 for loading that does not cause significant cracking. This stiffness is the basis for the stiffness of the concrete-filled steel module walls in the nuclear island seismic analyses and in the uncracked case for the hydrodynamic analyses.

- Case 2 considers the full thickness of the wall as uncracked concrete. This stiffness value is shown for comparison purposes. It is applicable for loads that do not result in significant cracking of the concrete and is the basis for the stiffness of the reinforced concrete walls in the nuclear island seismic analyses. This stiffness was used in the harmonic analyses of the internal structures described in subsection 3.8.3.4.2.2.

- Case 3 assumes that the concrete in tension has no stiffness. For the flexural stiffness this is the conventional stiffness value used in working stress design of reinforced concrete sections. For in-plane shear stiffness, a 45-degree diagonal concrete compression strut is assumed with tensile loads carried only by the steel plate. The in-plane stiffnesses calculated by these assumptions are lower than the stiffnesses measured in the tests described in References 27 through 29 for loading that causes cracking.

3.8.3.4.1 Seismic Analyses

3.8.3.4.1.1 Finite Element Model

The three-dimensional (3D) lumped-mass stick model of the containment internal structure is developed based on the structural properties obtained from a 3D finite element model. The structural modules are simulated within the finite element model using 3D shell elements. Equivalent shell element thickness and modulus of elasticity of the structural modules are computed as shown below. The shell element properties are computed using the combined gross concrete section and the transformed steel faceplates of the structural modules. This representation models the composite behavior of the steel and concrete.

- Axial and Shear Stiffnesses of module:

$$\sum EA = E_c(Lt + 2(n-1)Lt_s)$$

- Bending Stiffness of module:

$$\sum EI = E_c\left[\frac{L}{12}t^3 + 2\frac{L}{12}(n-1)\ t_s^3 + 2(n-1)Lt_s\left(\frac{t}{2}\right)^2\right]$$

where:

E_c = concrete modulus of elasticity
n = modular ratio of steel to concrete
L = length of wall module
t = thickness of wall module
t_s = thickness of plate on each face of wall module

These equations lead to an equivalent thickness, t_m, and modulus of elasticity of the plate elements, E_m, as shown below:

$$t_m = \left[\frac{1+3\alpha(n-1)}{1+\alpha(n-1)}\right]^{1/2} t$$

$$E_m = [1+\alpha(n-1)]\left[\frac{1+3\alpha(n-1)}{1+\alpha(n-1)}\right]^{-1/2} E_c$$

where $\alpha = 2t_s / t$ and terms of order α^3 are neglected (for a typical 30-inch thick wall with 1/2-inch steel plates, $\alpha = 0.033$).

3.8.3.4.1.2 Stiffness Assumptions for Local Seismic Analyses of In-Containment Refueling Water Storage Tank

The seismic analyses of the in-containment refueling water storage tank address the local response of the walls and water and are performed to verify the structural design of the tank. The local analyses performed uses the cracked section stiffness values based on composite behavior with zero stiffness for the concrete in tension (Case 3 of Table 3.8.3.1). The local analyses use the finite element model described in subsection 3.8.3.4.2.2. Response spectrum analyses are performed using the floor response spectra at the base of the tank.

3.8.3.4.1.3 Damping of Structural Modules

Damping of the structural modules is reported in Reference 27 based on the cyclic load tests of a containment internal structure model. The equivalent viscous damping at the design load level was 5 percent for the concrete-filled steel model. This was almost constant up to the load level at

which the steel plate started yielding. Dynamic analyses are performed using 7 percent damping for the reinforced concrete and 5 percent for the structural modules as shown in subsection 3.7.1.

3.8.3.4.2 Hydrodynamic Analyses

This subsection describes the hydrodynamic analyses performed for the AP600 which demonstrated that design of the walls of the in-containment refueling water storage tank for 5 psi as described in subsection 3.8.3.3.1 would bound the loads from the time history transient analysis. The analyses were performed using the AP600 test results. The peak values from these tests are also applicable to the AP1000 since they occur at the beginning of the transient, and the automatic depressurization system and the initial conditions are the same for the two plant designs (Reference 52). The structural configuration of the tank is identical. The minor differences in the height of the steam generator and pressurizer compartment walls and in the mass of the steam generators and pressurizer will have only a minor effect on the significant structural frequencies. Since the time histories applied in the AP600 analyses cover a broad range of frequencies the response of the AP1000 tank boundary will be similar to that of the AP600. The 5 psi pressure design basis for the tank boundary is therefore also applicable to the AP1000.

Hydrodynamic analyses were performed for the AP600 for automatic depressurization system discharge into the in-containment refueling water storage tank. This discharge is designated as ADS_1 in the load description of subsection 3.8.3.3.1 and results in higher hydrodynamic loading than the ADS discharge into a hot tank in ADS_2. The first three stages of the automatic depressurization system valves discharge into the tank through spargers under water, producing hydrodynamic loads on the tank walls and equipment. Hydrodynamic loads, measured in hydraulic tests of the automatic depressurization system sparger in a test tank, are evaluated using the source load approach (Reference 34). Analyses of the tests define source pressure loads that are then used in analyses of the in-containment refueling water storage tank to give the dynamic responses of the containment internal structures. The basic analysis approach consists of the following steps:

1. A pressure source, an impulsive forcing function at the sparger discharge, is selected from the tests using a coupled fluid structure finite element model of the test tank, taking into account fluid compressibility effects. This source development procedure is based on a comparison between analysis and test results, both near the sparger exit and at the boundaries of the test tank.

2. The pressure source is applied at each sparger location in a coupled fluid structure finite element model of the in-containment refueling water storage tank structure and of the contained water. The mesh characteristics of the model at the sparger locations and the applied forcing functions correspond to those of the test tank analysis.

3.8.3.4.2.1 Sparger Source Term Evaluation

A series of tests was conducted with discharge conditions representative of one sparger for the AP600 (References 35 and 36). Pressure traces measured during the test discharges were investigated, at both sparger exit and tank boundaries to (1) bound the expected discharge from the automatic depressurization system; (2) characterize the pressure wave transmission through the

pool water; (3) determine the maximum pressure amplitudes and the frequency content; and (4) produce reference data for qualification of the analytical procedure. Pressure time histories and power spectrum densities were examined at reference sensors, both for the total duration of the discharge transient (about 50 seconds) and for critical time intervals.

Fluid-structure interaction analyses were performed with the ANSYS computer code (Reference 37). The mathematical model consists of a 3D sector finite element model, 15 degrees wide, as shown in Figure 3.8.3-9. It uses STIF30 fluid and STIF63 structural ANSYS finite elements, which take into account fluid compressibility and fluid-structure interaction. Rayleigh damping of 4 percent is used for the concrete structure, and fluid damping is neglected. Direct step-by-step time integration is used. The measured discharge pressures for single time intervals are imposed as uniform forcing functions on the idealized spherical surface of the steam/water interface, and pressures transmitted through the water to the tank boundary are calculated and compared with test measurements. The analyses of the test tank showed satisfactory agreement for the pressures at the tank boundary.

The examination of test results related to the structural design of the in-containment refueling water storage tank under automatic depressurization system hydrodynamic excitation and the comparison with the analytical procedure previously described, lead to the following conclusions regarding the sparger source term definition:

- The automatic depressurization system discharge into cold water produces the highest hydrodynamic pressures. The tests at higher water temperatures produce significantly lower pressures.

- Two pressure time histories, characterized by different shapes and frequency content, can be selected as representative of the sparger discharge pressures; they are assumed as acting on a spherical bubble centered on the sparger centerline and enveloping the ends of the sparger arms.

- The application of such time histories as forcing functions to an analytical model, simulating the fluid structure interaction effects in the test tank, has been found to predict the measured tank wall pressures, for the two selected reference time intervals.

- The two defined sparger source term pressure time histories can be used as forcing functions for global hydrodynamic analyses of the in-containment refueling water storage tank by developing a comprehensive fluid-structure finite element model and reproducing the test tank mesh pattern in the sparger region.

- The hydrodynamic loads on the vessel head support columns and ADS sparger piping located in the IRWST are developed from the forcing functions using the methodology documented in Reference 51.

3.8.3.4.2.2 In-Containment Refueling Water Storage Tank Analyses

The in-containment refueling water storage tank is constructed as an integral part of the containment internal structures as described in subsection 3.8.3.1.3. It contains two

depressurization spargers that are submerged approximately 9 feet below the normal water level. Transmission of the hydrodynamic pressures from the sparger discharge to the wetted in-containment refueling water storage tank is evaluated using the coupled fluid-structure interaction method similar to that described for the test tank analysis in the previous subsection.

The 3D ANSYS finite element model includes the in-containment refueling water storage tank boundary, the water within the in-containment refueling water storage tank, the adjacent structural walls of the containment internal structures, and the operating floor. The model of the in-containment refueling water storage tank, shown in Figures 3.8.3-10 (sheet 2), 3.8.3-11, and 3.8.3-12, represents the outer steel structures, the inner concrete walls, and the water. The model of the adjacent structural walls and floors is shown in Figure 3.8.3-10 (sheet 1). The flexible steel outer wall is represented using beam and shell elements; isotropic plate elements are used to represent the inner structural module walls. The water is modelled as a compressible fluid to provide an acoustic medium to transmit the source pressure. The model has two bubble boundaries representing the spargers. Pressure loads are applied to the solid element faces adjacent to the air bubbles. The forcing functions at the sparger locations are conservatively assumed to be in phase. Rayleigh damping of 5 percent is used for the concrete-filled structural modules and fluid damping is neglected. All degrees of freedom were retained in the step-by-step direct integration solution procedure for the in-containment refueling water storage tank boundary and the water. Degrees of freedom in the adjacent walls and floor were condensed by Guyon reduction.

Significant structural frequencies of the AP600 containment internal structures were analyzed using the harmonic response option with the ANSYS model of the in-containment refueling water storage tank and containment internal structures. A harmonic unit pressure is applied at the surface of the spherical bubble representing the automatic depressurization system spargers. Material properties for the concrete elements are based on the uncracked gross concrete section (Case 2 of Table 3.8.3-1). The results of these harmonic response analyses show the response deflection as a function of input frequency at nodes in the containment internal structures. The harmonic response analyses show that the largest responses are close to the wetted boundary of the in-containment refueling water storage tank and that the significant frequencies are from 18 to 50 hertz.

Two time histories are identified for the structural hydrodynamic analyses; one has significant frequencies below 40 hertz while the other has significant frequencies in the range of 40 to 60 hertz. Both time history inputs are used in the hydrodynamic analyses with the monolithic uncracked section properties for all walls. The lower frequency input is also applied in lower bound analyses using the cracked section stiffness values (Case 3 of Table 3.8.3-1) for the concrete walls that are boundaries of the in-containment refueling water storage tank. Monolithic properties are used for the other walls. Results from these cases are enveloped, thereby accounting for variabilities in the structural analyses.

The analyses of the AP600 in-containment refueling water storage tank give wall pressures, displacements, accelerations, hydrodynamic floor response spectra, and member forces due to the automatic depressurization system discharge pressure forcing functions. Consideration of pressure wave transmission and fluid-structure interaction shows a significant wall pressure attenuation with distance from the sparger region and with increasing wall flexibilities, relative to the

measured sparger pressure forcing function. The member stresses are evaluated against the allowable stresses specified in subsection 3.8.3.5 for seismic Category I structures, considering the hydrodynamic loads as live loads. The analyses show that the member forces in the walls of the in-containment refueling water storage tank are bounded by a case with a uniform pressure of 5 psi applied to the walls.

3.8.3.4.3 Thermal Analyses

The in-containment refueling water storage tank water and containment atmosphere are subject to temperature transients as described in subsection 3.8.3.3.1. The temperature transients result in a nonlinear temperature distribution within the wall modules. Temperatures within the concrete wall are calculated in a unidimensional heat flow analysis. The average and equivalent linear gradients are applied to a finite element model of the containment internal structures at selected times during the transient. The effect of concrete cracking is considered in the stiffness properties for the concrete elements subjected to the thermal transient. The finite element model is that described in subsection 3.8.3.4.2.2 except that the model of the water in the IRWST is not needed.

The structural modules are subject to a rapid temperature transient in the event of a loss-of-coolant accident (LOCA) or a main steam line break (MSLB). The structural modules were evaluated for these rapid temperature transients. The evaluation considered both carbon and stainless steel faceplates. The steel plate heats up most rapidly in the LOCA event with temperatures up to 270°F in the first few minutes for an ambient initial temperature of 50°F. The faceplate of the structural module will see differential temperatures of 220°F relative to the concrete. The concrete heats up more slowly and does not see a significant temperature increase during the early part of the transient. There is relative thermal growth of the faceplate, causing shear loads in the shear studs, and embedded angles of the structural steel trusses that are welded to the faceplate. The heatup of the surface plates during the initial portion of the LOCA transient results in cracking of the concrete walls except in regions where there is significant external restraint. The structural module maintains its integrity throughout the rapid thermal transient.

Thermal transients for the design basis accidents are described in Section 6.3. The analyses for these transients are similar to those described above.

3.8.3.5 Design Procedures and Acceptance Criteria

The containment internal structures that contain reinforcing steel including most of the areas below elevation 98′, are designed by the strength method, as specified in the ACI Code Requirements for Nuclear Safety Related Structures, ACI-349. This code includes ductility criteria for use in detailing, placing, anchoring, and splicing of the reinforcing steel.

The internal steel framing is designed according to the AISC Specification for the Design, Fabrication and Erection of Steel Safety Related Structures for Nuclear Facilities, AISC-N690, supplemented by the requirements given in subsection 3.8.4.5.

The secondary shield walls, in-containment refueling water storage tank, refueling cavity, and operating floor above the in-containment refueling water storage tank are designed using structural modules. Concrete-filled structural wall modules are designed as reinforced concrete structures in

accordance with the requirements of ACI-349, as supplemented in the following paragraphs. Structural floor modules are designed as composite structures in accordance with AISC-N690.

Methods of analysis used are based on accepted principles of structural mechanics and are consistent with the geometry and boundary conditions of the structures.

The methods described in subsection 3.7.2 are employed to obtain the safe shutdown earthquake loads at various locations in the containment internal structures. The safe shutdown earthquake loads are derived from the equivalent static analysis of a three-dimensional, finite element model representing the entire containment internal structures.

The determination of pressure and temperature loads due to pipe breaks is described in subsections 3.6.1 and 6.2.1.2. Subcompartments inside containment containing high energy piping are designed for a pressurization load of 5 psi. The pipe tunnel in the CVS room (room 11209, Figure 1.2-6) is designed for a pressurization load of 7.5 psi. These subcompartment design pressures bound the pressurization effects due to postulated breaks in high energy pipe. The design for the effects of postulated pipe breaks is performed as described in subsection 3.6.2. Determination of pressure loads resulting from actuation of the automatic depressurization system is described in subsection 3.8.3.3.1.

Determination of reactor coolant loop support loads is described in subsection 3.9.3. Design of the reactor coolant loop supports within the jurisdiction of ASME Code, Section III, Division 1, Subsection NF is described in subsections 3.9.3 and 5.4.10.

Computer codes used are general purpose codes. The code development, verification, validation, configuration control, and error reporting and resolution are according to the Quality Assurance requirements of Chapter 17.

3.8.3.5.1 Reactor Coolant Loop Supports

3.8.3.5.1.1 Reactor Vessel Support System

The embedded portions of the reactor vessel supports, which are outside the ASME jurisdictional boundary, are designed by elastic methods of analysis. They are analyzed and designed to resist the applicable loads and load combinations given in subsection 3.8.4.3. The design is according to AISC-N690 and ACI-349. Figure 3.8.3-4 shows the jurisdictional boundaries.

3.8.3.5.1.2 Steam Generator Support System

The embedded portions of the steam generator supports, which are outside the ASME jurisdictional boundary, are designed by elastic methods of analysis. They are analyzed and designed to resist the applicable loads and load combinations given in subsection 3.8.4.3. The design is according to AISC-N690 and ACI-349. Figure 3.8.3-5 shows the jurisdictional boundaries.

3.8.3.5.1.3 Reactor Coolant Pump Support System

The reactor coolant pumps are integrated into the steam generator channel head and consequently do not have a separate support system.

3.8.3.5.1.4 Pressurizer Support System

The embedded portions of the pressurizer supports, which are outside the ASME jurisdictional boundary, are designed by elastic methods of analysis. They are analyzed and designed to resist the applicable loads and load combinations given in subsection 3.8.4.3. The design is according to AISC-N690 and ACI-349. Figure 3.8.3-6 shows the jurisdictional boundaries.

3.8.3.5.2 Containment Internal Structures Basemat

The containment internal structures basemat including the primary shield wall and reactor cavity are designed for dead, live, thermal, pressure, and safe shutdown earthquake loads. The structural modules are designed as described in subsection 3.8.3.5.3.

The reinforced concrete forming the base of the containment internal structures is designed according to ACI 349.

3.8.3.5.3 Structural Wall Modules

Structural wall modules without concrete fill, such as the west wall of the in-containment refueling water storage tank, are designed as steel structures, according to the requirements of AISC-N690. This code is applicable since the module is constructed entirely out of structural steel plates and shapes. In local areas stresses due to restraint of thermal growth may exceed yield and the allowable stress intensity is 3 S_{m1}. This allowable is based on the allowable stress intensity for Service Level A loads given in ASME Code, Section III, Subsection NE, Paragraph NE-3221.4.

The concrete-filled steel module walls are designed for dead, live, thermal, pressure, safe shutdown earthquake, and loads due to postulated pipe breaks. The in-containment refueling water storage tank walls are also designed for the hydrostatic head due to the water in the tank and the hydrodynamic pressure effects of the water due to the safe shutdown earthquake, and automatic depressurization system pressure loads due to sparger operation. The walls of the refueling cavity are also designed for the hydrostatic head due to the water in the refueling cavity and the hydrodynamic pressure effects of the water due to the safe shutdown earthquake.

Figure 3.8.3-8 shows the typical design details of the structural modules, typical configuration of the wall modules, typical anchorages of the wall modules to the reinforced base concrete, and connections between adjacent modules. Concrete-filled structural wall modules are designed as reinforced concrete structures in accordance with the requirements of ACI-349, as supplemented in the following paragraphs. The faceplates are considered as the reinforcing steel, bonded to the concrete by headed studs. The application of ACI-349 and the supplemental requirements are supported by the behavior studies described in subsection 3.8.3.4.1. The steel plate modules are anchored to the reinforced concrete basemat by mechanical connections welded to the steel plate or by lap splices where the reinforcement overlaps shear studs on the steel plate. The design of critical sections is described in subsection 3.8.3.5.8.

3.8.3.5.3.1 Design for Axial Loads and Bending

Design for axial load (tension and compression), in-plane bending, and out-of-plane bending is in accordance with the requirements of ACI-349, Chapters 10 and 14.

3.8.3.5.3.2 Design for In-Plane Shear

Design for in-plane shear is in accordance with the requirements of ACI-349, Chapters 11 and 14. The steel faceplates are treated as reinforcing steel, contributing as provided in Section 11.10 of ACI-349.

3.8.3.5.3.3 Design for Out-of-Plane Shear

Design for out-of-plane shear is in accordance with the requirements of ACI-349, Chapter 11.

3.8.3.5.3.4 Evaluation for Thermal Loads

The effect of thermal loads on the structural wall modules, with and without concrete fill, is evaluated by using the working stress design method for load combination 3 of Tables 3.8.4-1 and 3.8.4-2. This evaluation is in addition to the evaluation using the working stress design method of AISC N690 or the strength design method of ACI-349 for the load combinations without the thermal load. Acceptance for the load combination with normal thermal loads, which includes the thermal transients described in subsection 3.8.3.3.1, is that the stress in general areas of the steel plate be less than yield. In local areas where the stress may exceed yield the total stress intensity range is less than twice yield. This evaluation of thermal loads is based on the ASME Code philosophy for Service Level A loads given in ASME Code, Section III, Subsection NE, Paragraphs NE-3213.13 and 3221.4.

3.8.3.5.3.5 Design of Trusses

The trusses provide a structural framework for the modules, maintain the separation between the faceplates, support the modules during transportation and erection, and act as "form ties" between the faceplates when concrete is being placed. After the concrete has cured, the trusses are not required to contribute to the strength or stiffness of the completed modules. However, they do provide additional shear capacity between the steel plates and concrete as well as additional strength similar to that provided by stirrups in reinforced concrete. The trusses are designed according to the requirements of AISC-N690.

3.8.3.5.3.6 Design of Shear Studs

The wall structural modules are designed as reinforced concrete elements, with the faceplates serving as reinforcing steel. Since the faceplates do not have deformation patterns typical of reinforcing steel, shear studs are provided to transfer the forces between the concrete and the steel faceplates. The shear studs make the concrete and steel faceplates behave compositely. In addition, the shear studs permit anchorage for piping and other items attached to the walls.

The size and spacing of the shear studs is based on Section Q1.11.4 of AISC-N690 to develop full composite action between the concrete and the steel faceplates.

3.8.3.5.4 Structural Floor Modules

Figure 3.8.3-3 shows the typical design details of the floor modules. The operating floor is designed for dead, live, thermal, safe shutdown earthquake, and pressure due to automatic depressurization system operation or due to postulated pipe break loads. The operating floor region above the in-containment refueling water storage tank is a series of structural modules. The remaining floor is designed as a composite structure of concrete slab and steel beams in accordance with AISC-N690.

For vertical downward loads, the floor modules are designed as a composite section, according to the requirements of Section Q1.11 of AISC-N690. Composite action of the steel section and concrete fill is assumed based on meeting the intent of Section Q1.11.1 for beams totally encased in concrete. Although the bottom flange of the steel section is not encased within concrete, the design configuration of the floor module provides complete concrete confinement to prevent spalling. It also provides a better natural bonding than the code-required configuration.

For vertical upward loads, no credit is taken for composite action. The steel members are relied upon to provide load-carrying capacity. Concrete, together with the embedded angle stiffeners, is assumed to provide stability to the plates.

Floor modules are designed using the following basic assumptions and related requirements:

- Concrete provides restraint against buckling of steel plates. The buckling unbraced length of the steel plate, therefore, is assumed to equal the span length between the fully embedded steel plates and shapes.
- Although the floor modules forming the top (ceiling) of the in-containment refueling water storage tank are not in contact with water, stainless steel plates are used for the tank boundary.
- The floor modules are designed as simply supported beams.

3.8.3.5.4.1 Design for Vertical Downward Loads

The floor modules are designed as a one-way composite concrete slab and steel beam system in supporting the vertical downward loads. The effective width of the concrete slab is determined according to Section Q1.11.1 of AISC-N690. The effective concrete compression area is extended to the neutral axis of the composite section. The concrete compression area is treated as an equivalent steel area based on the modular ratio between steel and concrete material. Figure 3.8.3-13 shows the effective composite sections. The steel section is proportioned to support the dead load and construction loads existing prior to hardening of the concrete. The allowable stresses are provided in Table 3.8.4-1.

3.8.3.5.4.2 Design for Vertical Upward Loads

For vertical upward loads, the floor modules are designed as noncomposite steel structures. The effective width, b_e, of the faceplate in compression is based on post-buckling strength of steel plates and is determined from Equation (4.16) of Reference 44. The faceplates of the structural

floor modules are stiffened and supported by embedded horizontal angles. Hence, the buckling unbraced length of the faceplates is equal to the span length between the horizontal angles. Since concrete provides restraint against buckling of the steel plates, a value of 0.65 is used for k when calculating the effective length of the steel plates and stiffeners whenever the plate or stiffener is continuous. The buckling stress, f_{cr}, of the faceplates is determined from Sections 9.2 and 9.3 of Reference 45. The effective width of the faceplates of the structural floor modules in compression is shown in Figure 3.8.3-13. The allowable stresses are provided in Table 3.8.4-1.

3.8.3.5.4.3 Design for In-Plane Loads

In-plane shear loads acting on the floor modules are assumed to be resisted only by the steel faceplate without reliance on the concrete for strength. The stresses in the faceplate due to the in-plane loads are combined with those due to vertical loads. The critical stress locations of the floor faceplate are evaluated for the combined normal and shear stress, based on the von Mises yield criterion:

For the particular case of a two-dimension stress condition the equation is:

$$(\sigma_1)^2 - \sigma_1\sigma_2 + (\sigma_2)^2 = (f_y)^2$$

where σ_1 and σ_2 are the principal stresses and f_y is the uniaxial yield stress.

For the faceplate where normal, σ, and shear, τ, stresses are calculated, the principal stresses can be expressed as follows:

$$\sigma_1 = \left(\frac{\sigma}{2}\right) + \sqrt{\frac{\sigma^2}{4} + \tau^2}$$

$$\sigma_2 = \left(\frac{\sigma}{2}\right) - \sqrt{\frac{\sigma^2}{4} + \tau^2}$$

Therefore, the condition at yield becomes:

$$\sigma^2 + 3\tau^2 = (f_y)^2$$

For the design of the structural floor module faceplate, the allowable stresses for the various loading conditions are as follows:

Normal condition:

$$\sigma^2 + 3\tau^2 \leq (0.6\ f_y)^2$$

Severe condition:

$$\sigma^2 + 3\tau^2 \leq (0.6\ f_y)^2$$

Extreme/abnormal condition:

$$\sigma^2 + 3\tau^2 \leq (0.96\ f_y)^2$$

Thermal stresses in the faceplates result from restraint of growth during the thermal transients described in subsection 3.8.3.3.1. Evaluation for thermal stresses is the same as discussed in subsection 3.8.3.5.3.4 for the wall modules.

3.8.3.5.5 Internal Steel Framing

Internal steel framing is analyzed and designed according to AISC-N690. Seismic analysis methods are described in subsection 3.7.3.

3.8.3.5.6 Steel Form Modules

The steel form modules consist of plate reinforced with angle stiffeners and tee sections as shown in Figure 3.8.3-16. The steel form modules are designed for concrete placement loads defined in subsection 3.8.3.3.2.

The steel form modules are designed as steel structures according to the requirements of AISC-N690. This code is applicable since the form modules are constructed entirely out of structural steel plates and shapes and the applied loads are resisted by the steel elements.

3.8.3.5.7 Design Summary Report

A design summary report is prepared for containment internal structures documenting that the structures meet the acceptance criteria specified in subsection 3.8.3.5.

Deviations from the design due to as-procured or as-built conditions are acceptable based on an evaluation consistent with the methods and procedures of Section 3.7 and 3.8 provided the following acceptance criteria are met.

- The structural design meets the acceptance criteria specified in Section 3.8
- The seismic floor response spectra meet the acceptance criteria specified in subsection 3.7.5.4

Depending on the extent of the deviations, the evaluation may range from documentation of an engineering judgement to performance of a revised analysis and design. The results of the evaluation will be documented in an as-built summary report.

3.8.3.5.8 Design Summary of Critical Sections

3.8.3.5.8.1 Structural Wall Modules

[*This subsection summarizes the design of the following critical sections:*

- *South west wall of the refueling cavity (4′0″thick)*

- *South wall of west steam generator cavity (2′6″thick)*
- *North east wall of in-containment refueling water storage tank (2′6″thick)*]*

[*The thicknesses and locations of these walls which are part of the boundary of the in-containment refueling water storage tank are shown in Figure 3.8.3-18. They are the portions of the structural wall modules experiencing the largest demand. The structural configuration and typical details are shown in Figures 3.8.3-1, 3.8.3-2, 3.8.3-8, 3.8.3-14, 3.8.3-15, and 3.8.3-17.*]* The structural analyses are described in subsection 3.8.3.4 summarized in Table 3.8.3-2. The design procedures are described in subsection 3.8.3.5.3.

[*The three walls extend from the floor of the in-containment refueling water storage tank at elevation 103′0″ to the operating floor at elevation 135′3″. The south west wall is also a boundary of the refueling cavity and has stainless steel plate on both faces. The other walls have stainless steel on one face and carbon steel on the other.*]* Design summaries are given in Table 3.8.3-4, 3.8.3-5, and 3.8.3-6. See Appendix 3H for more detailed discussion.

3.8.3.5.8.2 In-Containment Refueling Water Storage Tank Steel Wall

[*The in-containment refueling water storage tank steel wall is the circular boundary of the in-containment refueling water storage tank. The structural configuration and typical details are shown in sheet 3 of Figure 3.8.3-8.*]* The structural analyses are described in subsection 3.8.3.4 and summarized in Table 3.8.3-2. The design procedures are described in subsection 3.8.3.5.3. [*The steel wall extends from the floor of the in-containment refueling water storage tank at elevation 103′0″to the operating floor at elevation 135′3″. The wall is a 5/8″thick stainless steel plate. It has internal vertical stainless steel T-section columns spaced 4′-8″apart and external hoop carbon steel (L-section) angles spaced 18″to 24″apart. The wall is fixed to the adjacent modules and floor except for the top of columns which are free to slide radially and to rotate around the hoop direction.*

The wall is evaluated as vertical and horizontal beams. The vertical beams comprise the T-section columns plus the effective width of the plate. The horizontal beams comprise the L-section angles plus the effective width of the plate. Table 3.8.3-7 shows the ratio of the design stresses to the allowable stresses. When thermal effects result in stresses above yield, the evaluation is in accordance with the supplemental criteria]* as described in subsection 3.8.3.5.3.4. See Appendix 3H for more detailed discussions.

3.8.3.5.8.3 Column Supporting Operating Floor

[*This subsection summarizes the design of the most heavily loaded column in the containment internal structures. The column extends from elevation 107′-2″to the underside of the operating floor at elevation 135′-3″. In addition to supporting the operating floor, it also supports a steel grating floor at elevation 118′-0″.*

The load combinations in Table 3.8.4-1 were used to assess the adequacy of the column. See Appendix 3H for more detailed discussion.]*

*NRC Staff approval is required prior to implementing a change in this information; see DCD Introduction Section 3.5.

3.8.3.6 Materials, Quality Control, and Special Construction Techniques

Subsection 3.8.4.6 describes the materials and quality control program used in the construction of the containment internal structures. The structural steel modules are constructed using carbon steel plates and shapes. Duplex 2101 (American Society for Testing and Materials A240, designation S32101) stainless steel plates are used on the surfaces of the modules in contact with water during normal operation or refueling. The structural wall and floor modules are fabricated and erected in accordance with AISC-N690. Loads during fabrication and erection due to handling and shipping are considered as normal loads as described in subsection 3.8.4.3.1.1. Packaging, shipping, receiving, storage and handling of structural modules are in accordance with NQA-1, Subpart 2.2 (formerly ANSI/ASME N45.2.2 as specified in AISC N690).

3.8.3.6.1 Fabrication, Erection, and Construction of Structural Modules

Modular construction techniques are used extensively in the containment internal structures (Figure 3.8.3-1). Subassemblies, sized for commercial rail shipment, are assembled offsite and transported to the site. Onsite fabrication consists of combining the subassemblies in structural modules, which are then installed in the plant. A typical modular construction technique is described in the following paragraphs for Module CA01, which is the main structural module in the containment internal structures.

The CA01 module is a multicompartmented structure which, in its final form, comprises the central walls of the containment internal structures. The vertical walls of the module house the refueling cavity, the reactor vessel compartment, and the two steam generator compartments. The module (Figure 3.8.3-14) is in the form of a "T" and is approximately 88 feet long, 95 feet wide and 86 feet high. The module is assembled from about 40 prefabricated wall sections called structural submodules (Figure 3.8.3-15). The submodules are designed for railroad transport from the fabricator's shop to the plant site with sizes up to 12 feet by 12 feet by 80 feet long, weighing up to 80 tons. A typical submodule weighs between 9 and 11 tons. The submodules are assembled outside the nuclear island with full penetration welds between the faceplates of adjacent subunits. The completed CA01 module is lifted to its final location within the containment vessel by the heavy lift construction crane. Following placement of the CA01 module within the containment building, the hollow wall structures are filled with concrete, forming a portion of the structural walls of the containment internal structures.

Tolerances for fabrication, assembly and erection of the structural modules conform to the requirements of section 4 of ACI-117, sections 3.3 and 3.4 of AWS D1.1, and sections Q1.23 and Q1.25 of AISC-N690.

3.8.3.6.2 Nondestructive Examination

Nondestructive examination of the submodules and module is performed according to AISC-N690 and AWS D 1.1. Welds are visually examined for 100 percent of their length. Full penetration welds are inspected by ultrasonic or radiographic examination for 10 percent of their length. Partial penetration welds are inspected by magnetic particle or liquid penetrant examination for 10 percent of their length.

3.8.3.6.3 Concrete Placement

After installation of the CA01 module in the containment, the hollow walls are filled with concrete. The concrete is placed through multiple delivery trunks located along the top of the wall or through windows in the module walls or pumping ports built into the module wall. It is placed in incremental layers with the placement rate based on the pressure of the wet concrete and its setting time. During concrete placement, workers and inspectors have access to the inside of the modules. The arrangement of the module internal trusses provides communication to aid in the free flow of concrete and movement of personnel.

3.8.3.7 In-Service Testing and Inspection Requirements

There are no in-service testing or inspection requirements for the containment internal structures.

3.8.3.8 Construction Inspection

Construction inspection is conducted to verify the concrete wall thickness and the surface plate thickness. Inspections will be measured at applicable sections excluding designed openings or penetrations. Inspections will confirm that each section provides the minimum required steel and concrete thicknesses as shown in Table 3.8.3-3. The minimum required steel and concrete thicknesses represent the minimum values to meet the design basis loads. Table 3.8.3-3 also indicates the steel plate thickness provided which may exceed the minimum required value for the following reasons:

- Structural margin
- Ease of construction
- Construction loads
- Use of standard thicknesses

3.8.4 Other Category I Structures

The other seismic Category I structures are the shield building and the auxiliary building. New fuel and spent fuel racks are described in Section 9.1.

General criteria in this section describing the loads, load combinations, materials, and quality control are also applicable to the containment internal structures described in subsection 3.8.3.

3.8.4.1 Description of the Structures

3.8.4.1.1 Shield Building

The shield building is the shield building structure and annulus area that surrounds the containment building. It shares a common basemat with the containment building and the auxiliary building. The shield building is a reinforced concrete structure. The figures in Section 1.2 show the layout of the shield building and its interface with the other buildings of the nuclear island.

The following are the significant features and the principal systems and components of the shield building:

- Shield building cylindrical structure
- Shield building roof structure
- Lower annulus area
- Middle annulus area
- Upper annulus area
- Passive containment cooling system air inlet
- Passive containment cooling system water storage tank
- Passive containment cooling system air diffuser
- Passive containment cooling system air baffle
- Passive containment cooling system air inlet plenum

The cylindrical section of the shield building provides a radiation shielding function, a missile barrier function, and a passive containment cooling function. Additionally, the cylindrical section structurally supports the roof with the passive containment cooling system water storage tank and serves as a major structural member for the nuclear island. The floor slabs and structural walls of the auxiliary building are structurally connected to the cylindrical section of the shield building.

The shield building roof is a reinforced concrete shell supporting the passive containment cooling system tank and air diffuser. Air intakes are located at the top of the cylindrical portion of the shield building. The conical roof supports the passive containment cooling system tank as shown in Figure 3.8.4-2. The air diffuser is located in the center of the roof and discharges containment cooling air upwards.

The passive containment cooling system tank has a stainless steel liner which provides a leaktight barrier on the inside surfaces of the tank. The wall liner consists of a plate with stiffeners on the concrete side of the plate. The floor liner is welded to steel plates embedded in the surface of the concrete. The liner is welded and inspected during construction to assure its leaktightness. Leak chase channels are provided over the liner welds. This permits monitoring for leakage and also prevents degradation of the reinforced concrete wall due to freezing and thawing of leakage. The exterior face of the reinforced concrete boundary of the PCS tank is designed to control cracking in accordance with paragraph 10.6.4 of ACI 349 with the reinforcement steel stress based on sustained loads including thermal effects.

The upper annulus of the shield building is the volume of the annulus between elevation 132′-3″ and the bottom of the air diffuser. The middle annulus area, the volume of annulus between elevation 100′-0″ and elevation 132′-3″, contains the majority of the containment vessel penetrations. The area below elevation 100′-0″ is the lower annulus of the shield building. There is a concrete floor slab in the annulus at elevation 132′-3″, which is incorporated with the stiffener attached to the containment vessel.

A permanent flexible watertight and airtight seal is provided between the concrete floor slab at elevation 132′-3″ and the shield building to provide an environmental barrier between the upper and middle annulus sections. The flexible watertight seal is utilized to seal against water leakage from the upper annulus into the middle annulus. The seal is designated as nonsafety-related and

nonseismic; it is not relied upon to mitigate design basis events. The seal is able to accommodate events resulting in containment temperature and pressure excursions that result in lateral shell movement inward or outward.

3.8.4.1.2 Auxiliary Building

The auxiliary building is a reinforced concrete and structural steel structure. Three floors are above grade and two are located below grade. It is one of the three buildings that make up the nuclear island and shares a common basemat with the containment building and the shield building.

The auxiliary building is a C-shaped section of the nuclear island that wraps around approximately 50 percent of the circumference of the shield building. The floor slabs and the structural walls of the auxiliary building are structurally connected to the cylindrical section of the shield building.

The figures in Section 1.2 show the layout of the auxiliary building and its interface with the other buildings of the nuclear island. The following are the significant features and the principal systems and components of the auxiliary building:

- Main control room
- Remote shutdown room
- Class 1E dc switchgear
- Class 1E batteries
- Reactor trip switchgear
- Reactor coolant pump trip switchgear
- Main steam and feedwater piping
- Main control room heating, ventilating, and air conditioning (HVAC)
- Class 1E switchgear rooms heating, ventilating, and air conditioning
- Spent fuel pool
- Fuel transfer canal
- Cask loading and washdown pits
- New fuel storage area
- Cask handling crane
- Fuel handling machine
- Chemical and volume control system (CVS) makeup pumps
- Normal residual heat removal system (RNS) pumps and heat exchangers
- Liquid radwaste tanks and components
- Spent fuel cooling system
- Gaseous radwaste processing system
- Mechanical and electrical containment penetrations

Structural modules are used for part of the south side of the auxiliary building. These structural modules are structural elements built up with welded steel structural shapes and plates. Concrete is used where required for shielding, but reinforcing steel is not normally used. These modules include the spent fuel pool, fuel transfer canal, and cask loading and cask washdown pits. The configuration and typical details of the structural modules are the same as for the structural

modules described in subsection 3.8.3.1 for the containment internal structures. Figure 3.8.4-4 shows the location of the structural modules. The thickness of the structural wall modules ranges from 2′-6″ to 5′-0″. The structural modules extend from elevation 66′-6″ to elevation 135′-3″. The minimum thickness of the faceplates is 0.5 inch.

The ceiling of the main control room (floor at elevation 135′-3″), and the instrumentation and control rooms (floor at elevation 117′-6″) are designed as finned floor modules (Figure 3H.5-9). A finned floor consists of a 24-inch-thick concrete slab poured over a stiffened steel plate ceiling. The fins are rectangular plates welded perpendicular to the plate. Shear studs are welded on the other side of the steel plate, and the steel and concrete act as a composite section. The fins are exposed to the environment of the room, and enhance the heat-absorbing capacity of the ceiling (see Design Control Document (DCD) subsection 6.4.2.2). Several shop-fabricated steel panels, placed side by side, are used to construct the stiffened plate ceiling in a modularized fashion. The stiffened plate is designed to withstand construction loads prior to concrete hardening.

The new fuel storage area is a separate reinforced concrete pit providing temporary dry storage for the new fuel assemblies.

A cask handling crane travels in the east-west direction. The location and travel of this crane prevents the crane from carrying loads over the spent fuel pool, thus precluding them from falling into the spent fuel pool.

3.8.4.1.3 Containment Air Baffle

The containment air baffle is located within the upper annulus of the shield building, providing an air flow path for the passive containment cooling system. The air baffle separates the downward air flow entering at the air inlets from the upward air flow that cools the containment vessel and flows out of the discharge stack. The upper portion is supported from the shield building roof and the remainder is supported from the containment vessel. The air baffle is a seismic Category I structure designed to withstand the wind and tornado loads defined in Section 3.3. The air baffle structural configuration is depicted in Figures 1.2-14 and 3.8.4-1. The baffle includes the following sections:

- A wall supported off the shield building roof (see Figure 1.2-14)
- A series of panels attached to the containment vessel cylindrical wall and the knuckle region of the dome
- A sliding plate closing the gap between the wall and the panels fixed to the containment vessel, designed to accommodate the differential movements between the containment vessel and shield building
- Flow guides attached at the bottom of the air baffle to minimize pressure drop

The air baffle is designed to meet the following functional requirements:

- The baffle and its supports are configured to minimize pressure losses as air flows through the system

- The baffle and its supports have a design objective of 60 years
- The baffle and its supports are configured to permit visual inspection and maintenance of the air baffle as well as the containment vessel. Periodic visual inspections are primarily to inspect the condition of the coatings
- The baffle is designed to maintain its function during postulated design basis accidents
- The baffle is designed to maintain its function under specified external events including earthquakes, hurricanes and tornadoes

The design of the containment air baffle is shown in Figure 3.8.4-1. The portion of the air baffle attached to the containment cylinder comprises 60 panels circumferentially in each of seven rows vertically, with each panel subtending an arc of six degrees (approximately 6 feet 11 inches wide). Each panel is supported by horizontal beams spaced approximately 13 feet 8 inches apart. These horizontal beams span the six-degree arc and are bolted to U-shaped attachments welded to the containment vessel. The attachment locations are established considering the containment vessel plate and ring assemblies, as shown in Figure 3.8.2-1. The lowest attachments are at the bottom of the middle containment ring subassembly. The upper attachments are on the head. The attachments can be installed in the subassembly area and, therefore, should not interfere with the containment vessel erection welds. The only penetrations through the containment vessel above the operating deck at elevation 135′-3″ are the main equipment hatch and personnel airlock. Five panels are deleted at the equipment hatch and two flow guides at the personnel airlock.

Two rows of panels are attached to the containment vessel above the cylindrical portion. The panels are curved to follow the curvature of the knuckle region of the head and then become flat forming a conical baffle that provides a transitional flow region into the upper shield building. A vertical sliding plate is provided between this upper row of panels and the air baffle that is attached directly to the shield building roof as shown in sheet 4 of Figure 3.8.4-1. This sliding plate rests on the 12 inch wide horizontal top surface of the upper row of panels. At ambient conditions the vertical sliding plate is approximately centered on the horizontal plate. The sliding plate is set at ambient conditions to permit relative movements from minus 2 inches to plus 3 inches radially and minus 1 inch to plus 4 inches vertically. This accommodates the differential movement between the containment vessel and the shield building, based on the absolute sum of the containment pressure and temperature deflections and of the seismic deflections, such that the integrity of the air baffle is maintained.

The panels accommodate displacements between each panel due to containment pressure and thermal growth. Radial and circumferential growth of the containment vessel are accommodated by slip at the bolts between the horizontal beams and the U shaped attachment resulting in small gaps between adjacent panels. Vertical growth is accommodated by slip between the panel and the horizontal beam supporting the top of the panel. Cover plates between the panels limit leakage during and after occurrence of these differential displacements.

3.8.4.1.4 Seismic Category I Cable Tray Supports

Electric cables are routed in horizontal and vertical steel trays supported by channel type struts made out of cold rolled channel type sections. Spacing of the supports is determined by allowable loads in the trays and stresses in the supports. The supports are attached to the walls, floors, and ceiling of the structures as required by the arrangement of the cable trays. Longitudinal and transverse bracing is provided where required.

3.8.4.1.5 Seismic Category I Heating, Ventilating, and Air Conditioning Duct Supports

Heating, ventilating, and air conditioning duct supports consist of structural steel members or cold rolled channel type sections attached to the walls, floors, and ceiling of the structures as required by the arrangement of the duct. Spacing of the supports is determined by allowable stresses in the duct work and supports. Longitudinal and transverse bracing is provided where required.

3.8.4.2 Applicable Codes, Standards, and Specifications

The following standards are applicable to the design, materials, fabrication, construction, inspection, or testing:

[• *American Concrete Institute (ACI), Code Requirements for Nuclear Safety Related Structures, ACI-349-01*]* (refer to subsection 3.8.4.5 for supplemental requirements)

- American Concrete Institute (ACI), ACI Detailing Manual, 1994

[• *American Institute of Steel Construction (AISC), Specification for the Design, Fabrication and Erection of Steel Safety Related Structures for Nuclear Facilities, AISC-N690-1994*]* (refer to subsection 3.8.4.5 for supplemental requirements)

- American Iron and Steel Institute (AISI), Specification for the Design of Cold Formed Steel Structural Members, Parts 1 and 2, 1996 Edition and 2000 Supplement

- American Welding Society (AWS), Structural Welding Code, AWS D 1.1-2000

- American Welding Society (AWS), Reinforcing Steel Welding Code, AWS D 1.4-98

- National Construction Issues Group (NCIG), Visual Weld Acceptance Criteria for Structural Welding at Nuclear Power Plants, NCIG-01, Revision 2, May 7, 1985

Section 1.9 describes conformance with the Regulatory Guides.

Welding and inspection activities for seismic Category I structural steel, including building structures, structural modules, cable tray supports and heating, ventilating, and air conditioning duct supports are accomplished in accordance with written procedures and meet the requirements of the American Institute of Steel Construction (AISC N-690). The weld acceptance criteria is as defined in NCIG-01 Revision 2. The welded seam of the plates forming part of the leaktight boundary of the spent fuel pool, fuel transfer canal, cask loading pit, and cask washdown pit is examined by liquid penetrant and vacuum box after fabrication to confirm that the boundary does not leak.

*NRC Staff approval is required prior to implementing a change in this information; see DCD Introduction Section 3.5.

3.8.4.3 Loads and Load Combinations

3.8.4.3.1 Loads

The loads considered are normal loads, severe environmental loads, extreme environmental loads, and abnormal loads.

3.8.4.3.1.1 Normal Loads

Normal loads are those loads to be encountered, as specified, during initial construction stages, during test conditions, and later, during normal plant operation and shutdown. They include the following:

D = Dead loads or their related internal moments and forces, including any permanent piping and equipment loads

F = Lateral and vertical pressure of liquids or their related internal moments and forces

L = Live loads or their related internal moments and forces, including any movable equipment loads and other loads that vary with intensity and occurrence

H = Static earth pressure or its related internal moments and forces

T_o = Thermal effects and loads during normal operating or shutdown conditions, based on the most critical transient or steady-state condition

R_o = Piping and equipment reactions during normal operating or shutdown conditions, based on the most critical transient or steady-state condition.

3.8.4.3.1.2 Severe Environmental Loads

The severe environmental load is the following:

W = Loads generated by the design wind specified for the plant in subsection 3.3.1.1

3.8.4.3.1.3 Extreme Environmental Loads

Extreme environmental loads are the following:

E_s = Loads generated by the safe shutdown earthquake specified for the plant, including the associated hydrodynamic and dynamic incremental soil pressure. Loads generated by the safe shutdown earthquake are specified in Section 3.7.

Wt = Loads generated by the design tornado specified for the plant in subsection 3.3.2, including loads due to tornado wind pressure, differential pressure, and tornado-generated missiles.

N = Loads generated by the probable maximum precipitation (provided previously in Table 2-1).

3.8.4.3.1.4 Abnormal Loads

Abnormal loads are those loads generated by a postulated high-energy pipe break accident for pipes not qualified for leak-before-break. Abnormal loads include the following:

P_a = Pressure load within or across a compartment generated by the postulated break. The main steam isolation valve (MSIV) and steam generator blowdown valve compartments are designed for a pressurization load of 6 psi. The subcompartment design pressure bounds the pressurization effects due to postulated breaks in high energy pipe. Determination of subcompartment pressure loads is discussed in subsection 6.2.1.2.

T_a = Thermal loads under thermal conditions generated by the postulated break and including T_o. Determination of subcompartment temperatures is discussed in subsection 6.2.1.2.

R_a = Piping and equipment reactions under thermal conditions generated by the postulated break and including R_o. Determination of pipe reactions generated by postulated breaks is discussed in subsection 3.6.

Y_r = Load on the structure generated by the reaction on the broken high-energy pipe during the postulated break. Determination of the loads is discussed in Section 3.6.

Y_j = Jet impingement load on the structure generated by the postulated break. Determination of the loads is discussed in Section 3.6.

Y_m = Missile impact load on the structure generated by or during the postulated break, as from pipe whipping. Determination of the loads is discussed in Section 3.6.

3.8.4.3.1.5 Dynamic Effects of Abnormal Loads

The dynamic effects from the impulsive and impactive loads caused by P_a, R_a, Y_r, Y_j, Y_m, and tornado missiles are considered by one of the following methods:

- Applying an appropriate dynamic load factor to the peak value of the transient load
- Using impulse, momentum, and energy balance techniques
- Performing a time-history dynamic analysis

Elastoplastic behavior may be assumed with appropriate ductility ratios, provided excessive deflections will not result in loss of function of any safety-related system.

Dynamic increase factors appropriate for the strain rates involved may be applied to static material strengths of steel and concrete for purposes of determining section strength.

3.8.4.3.2 Load Combinations

3.8.4.3.2.1 Steel Structures

The steel structures and components are designed according to the elastic working stress design methods of the AISC-N690 specification using the load combinations specified in Table 3.8.4-1.

3.8.4.3.2.2 Concrete Structures

The concrete structures and components are designed according to the strength design methods of ACI-349 Code, using the load combinations specified in Table 3.8.4-2.

3.8.4.3.2.3 Live Load for Seismic Design

Floor live loads, based on requirements during plant construction and maintenance activities, are specified varying from 50 to 250 pounds per square foot (with the exception of the containment operating deck which is designed for 800 pounds per square foot specified for plant maintenance condition).

For the local design of members, such as the floors and beams, seismic loads include the response due to masses equal to 25 percent of the specified floor live loads or 75 percent of the roof snow load, whichever is applicable. These seismic loads are combined with 100 percent of these specified live loads, or 75 percent of the roof snow load, whichever is applicable, except in the case of the containment operating deck. For the seismic load combination, the containment operating deck is designed for a live load of 200 pounds per square foot which is appropriate for plant operating condition. The mass of equipment and distributed systems is included in both the dead and seismic loads.

3.8.4.4 Design and Analysis Procedures

3.8.4.4.1 Seismic Category I Structures

[*The design and analysis procedures for the seismic Category I structures (other than the containment vessel and containment internal structures), including assumptions on boundary conditions and expected behavior under loads, are in accordance with ACI-349 for concrete structures, with AISC-N690 for steel structures, and AISI for cold formed steel structures.]** The structural modules in the auxiliary building are designed using the same procedures as the structural modules in the containment internal structures described in subsection 3.8.3.

[*The criteria of ACI-349, Chapter 12, are applied in development and splicing of the reinforcing steel. The ductility criteria of ACI-349, Chapter 21, are applied in detailing and anchoring of the reinforcing steel.*

The application of Chapter 21 detailing is demonstrated in the reinforcement details of critical sections]* in subsection 3.8.5 and Appendix 3H.

*NRC Staff approval is required prior to implementing a change in this information; see DCD Introduction Section 3.5.

[*Sections 21.2 through 21.5 of Chapter 21 of ACI 349 are applicable to frame members resisting earthquake effects. These requirements are considered in detailing structural elements subjected to significant flexure and out-of-plane shear. These elements include the following examples described in Appendix 3H*:]*

- Reinforcement for the shield building roof tension ring: [*The hoop reinforcement is detailed in accordance with 21.3.3.6 of ACI 349-01.*]*

- Reinforcement details for the basemat are described in subsection 3.8.5. [*Shear stirrups have T headed anchors at each end.*]*

- Reinforcement details for the exterior walls below grade are described in subsection 3H.5.1.1. [*Shear stirrups have T headed anchors at each end.*]*

[*Sections 21.2 and 21.6 of Chapter 21 of ACI 349 are applicable to walls, diaphragms, and trusses serving as parts of the earthquake force-resisting systems as well as to diaphragms, struts, ties, chords and collector elements. These requirements are considered in the detailing of reinforcement in the walls and floors of the auxiliary building and in the shield building cylindrical wall and roof.*]*

- Reinforcement for the shear walls and floors are shown in subsections 3H.5.1 to 3H.5.4. [*Transverse reinforcement terminating at the edges of structural walls or at openings is detailed in accordance with 21.6.6.5 of ACI 349.*]*

- Air inlet region of shield building cylinder: The cylinder in this region is 4′-6″ thick, with high strength concrete contained within steel liner plates on both faces (as shown in Appendix 3H, Figure 3H.5-11). The liner plates, tied to concrete with shear connectors, behave as concrete reinforcement. Vertical stiffeners are provided to support the wet concrete load. The air inlets consist of 5/16″ thick square steel tubes (16″x16″), inclined upward from outside face to inside face.

The bases of design for the tornado, pipe breaks, and seismic effects are discussed in Sections 3.3, 3.6, and 3.7, respectively. The foundation design is described in subsection 3.8.5.

The seismic Category I structures are reinforced concrete and structural module shear wall structures consisting of vertical shear/bearing walls and horizontal slabs supported by structural steel framing. Seismic forces are obtained from the equivalent static analysis of the three dimensional finite element models described in Table 3.7.2-14. The out-of-plane bending and shear loads for flexible floors and walls are analyzed using the methodology described in subsections 3.7.2.6 and 3.7.3. These results are modified to account for accidental torsion as described in subsection 3.7.2.11. Where the refinement of these finite element models is insufficient for design of the reinforcement, for example in walls with a large number of openings, detailed finite element models are used. Also evaluated and considered in the shear wall and floor slab design are out-of-plane bending and shear loads, such as live load, dead load, seismic, lateral earth pressure, hydrostatic, hydrodynamic, and wind pressure. These out-of-plane bending and shear loads are obtained from the equivalent static analyses supplemented by hand calculations.

*NRC Staff approval is required prior to implementing a change in this information; see DCD Introduction Section 3.5.

The exterior walls of the seismic Category I structures below the grade are designed to resist the worst case lateral earth pressure loads (static and dynamic), soil surcharge loads, and loads due to external flooding as described in Section 3.4. The lateral earth pressure loads are evaluated for two cases:

- Lateral earth pressure equal to the sum of the static earth pressure plus the dynamic earth pressure calculated in accordance with ASCE 4-98 (Reference 3), Section 3.5.3, Figure 3.5-1, "Variation of Normal Dynamic Soil Pressures for the Elastic Solution"

- Lateral earth pressure equal to the passive earth pressure

The shield building roof and the passive containment cooling water storage tank are analyzed using three-dimensional finite element models with the ANSYS computer codes. Loads and load combinations are given in subsection 3.8.4.3 and include construction, dead, live, thermal, wind and seismic loads. Seismic loads are applied as equivalent static accelerations. The seismic response of the water in the tank is analyzed in a separate finite element response spectrum analysis with seismic input defined by the floor response spectrum.

The liner for the passive containment cooling water storage system tank is analyzed by hand calculation. The design considers construction loads during concrete placement, loads due to handling and shipping, normal loads including thermal, and the safe shutdown earthquake. Buckling of the liner is prevented by anchoring the liner using the embedded stiffeners and welded studs. The liner is designed as a seismic Category I steel structure in accordance with AISC N690 with the supplemental requirements given in subsection 3.8.4.

The structural steel framing is used primarily to support the concrete slabs and roofs. Metal decking, supported by the steel framing, is used as form work for the concrete slabs and roofs. The structural steel framing is designed for vertical loads. Appendix 3H shows typical structural steel framing in the auxiliary building.

Computer codes used are general purpose computer codes. The code development, verification, validation, configuration control, and error reporting and resolution are according to the quality assurance requirements of Chapter 17.

[*The finned floors for the main control room and the instrumentation and control room ceilings are designed as reinforced concrete slabs in accordance with ACI-349. The steel panels are designed and constructed in accordance with AISC-N690. For positive bending, the steel plate is in tension and the steel plate with fin stiffeners serves as the bottom reinforcement. For negative bending, compression is resisted by the stiffened plate and tension by top reinforcement in the concrete.*]*

3.8.4.4.2 Seismic Category I Cable Tray Supports

The design and analysis procedures for seismic Category I cable trays and their supports are described in Appendix 3F.

*NRC Staff approval is required prior to implementing a change in this information; see DCD Introduction Section 3.5.

3.8.4.4.3 Seismic Category I Heating, Ventilating, and Air Conditioning Duct Supports

The design and analysis procedures for seismic Category I heating, ventilating, and air conditioning ducts and their supports are described in Appendix 3A.

3.8.4.5 Structural Criteria

[*The analysis and design of concrete conform to ACI-349. The analysis and design of structural steel conform to AISC-N690. The analysis and design of cold-formed steel structures conform to AISI. The margins of structural safety are as specified by those codes.*]*

3.8.4.5.1 Supplemental Requirements for Concrete Structures

[*Supplemental requirements for ACI-349-01 are given in the position on Regulatory Guide 1.142 in Appendix 1A. The structural design meets the supplemental requirements identified in Regulatory Positions 2 through 8, 10 through 13, and 15.*]*

Paragraph 21.6.1 of ACI 349-01 should reference 21.6.6 instead of 21.6.5. Paragraph 21.6.5 in ACI 349-97 was renumbered to 21.6.6 in ACI 349-01, and the reference in 21.6.1 was not updated. The errata for ACI 349-01 are being updated to include this correction. This makes the paragraph consistent with ACI 349-97, which was endorsed by Regulatory Guide 1.142.

[*Design of fastening to concrete is in accordance with ACI 349-01, Appendix B.*]*

3.8.4.5.2 Supplemental Requirements for Steel Structures

[*Supplemental requirements for use of AISC-N690 are as follows:*

- *In Section Q1.0.2, the definition of secondary stress applies to stresses developed by temperature loading only.*
- *In Section Q1.3, where the structural effects of differential settlement are present, they are included with the dead load, D.*
- *In Table Q1.5.7.1, the stress limit coefficients for compression are as follows:*

  1.3 instead of 1.5 in load combinations 2, 5, and 6.
  1.4 instead of 1.6 in load combinations 7, 8, and 9.
  1.6 instead of 1.7 in load combination 11.

- *In Section Q1.5.8, for constrained members (rotation and/or displacement constraint such that a thermal load causes significant stresses), supporting safety-related structures, systems, or components, the stresses under load combinations 9, 10, and 11 are limited to those allowed in Table Q1.5.7.1 as modified above.*

*NRC Staff approval is required prior to implementing a change in this information; see DCD Introduction Section 3.5.

- *Sections Q1.24 and Q1.25.10 are supplemented as follows:*

  Shop painting is in accordance with Section M of the Manual of Steel Construction, Load and Resistance Factor Design, First Edition. Exposed areas after installation are field painted in accordance with the applicable portion of Chapter M of the Manual of Steel Construction, Load and Resistance Factor Design, First Edition.]* See subsection 6.1.2.1 for additional description of the protective coatings.

3.8.4.5.3 Design Summary Report

A design summary report is prepared for seismic Category I structures documenting that the structures meet the acceptance criteria specified in subsection 3.8.4.5.

Deviations from the design due to as-procured or as-built conditions are acceptable based on an evaluation consistent with the methods and procedures of Section 3.7 and 3.8 provided the following acceptance criteria are met.

- the structural design meets the acceptance criteria specified in Section 3.8
- the seismic floor response spectra meet the acceptance criteria specified in subsection 3.7.5.4

Depending on the extent of the deviations, the evaluation may range from documentation of an engineering judgement to performance of a revised analysis and design. The results of the evaluation will be documented in an as-built summary report.

3.8.4.5.4 Design Summary of Critical Sections

[*The design of representative critical elements of the following structures is described in Appendix 3H.*

- *South wall of auxiliary building (column line 1), elevation 66′-6″ to elevation 180′-0″*
- *Interior wall of auxiliary building (column line 7.3), elevation 66′-6″ to elevation 160′-6″*
- *West wall of main control room in auxiliary building (column line L), elevation 117′-6″ to elevation 153′-0″*
- *North wall of MSIV east compartment (column line 11), elevation 117′-6″ to elevation 153′-0″*
- *Shield building cylinder, elevation 160′-6″ to elevation 200′-0″*
- *Roof slab at elevation 180′-0″ adjacent to shield building cylinder*
- *Floor slab on metal decking at elevation 135′-3″*
- *2′-0″ slab in auxiliary building (operations work area (tagging room) ceiling) at elevation 135′-3″ (Note: The ‘Tagging Room’ has been renamed as “Operations Work Area.”*

*NRC Staff approval is required prior to implementing a change in this information; see DCD Introduction Section 3.5.

However, to avoid changing the associated design and analysis documents, this room is referred to as the 'Tagging Room.')

- *Finned floor in the main control room at elevation 135′-3″*
- *Shield building roof, exterior wall of the PCCS water storage tank*
- *Shield building roof, tension ring and columns between air inlets, elevation 265′-0″ to elevation 276′-0″*
- *Divider wall between the spent fuel pool and the fuel transfer canal*]*

3.8.4.6 Materials, Quality Control, and Special Construction Techniques

This subsection contains information relating to the materials, quality control program, and special construction techniques used in the construction of the other seismic Category I structures, as well as the containment internal structures. The edition of the referenced specifications applicable at the start of construction will be used.

3.8.4.6.1 Materials

3.8.4.6.1.1 Concrete

The compressive strength of concrete used in the seismic Category I structures and containment internal structures is $f_c^{'}$ = 4000 psi. For shield building structure, the compressive strength of concrete is $f_c^{'}$ = 6000 psi. The test age of concrete containing pozzolan is 56 days. The test age of concrete without pozzolan is the normal 28 days. Concrete is batched and placed according to Reference 6, Reference 7, and ACI-349.

Portland cement conforms to Reference 8, Type II. Certified copies of mill test reports showing that the chemical composition and physical properties conform to the specification are obtained for each cement delivery.

Aggregates conform to Reference 9. The fineness modulus of fine aggregate (sand) is not less than 2.5, nor more than 3.1. In at least four of five successive test samples, such modulus is not allowed to vary more than 0.20 from the moving average established by the last five tests. Coarse aggregates may be rejected if the loss from the Los Angeles abrasion test, Reference 10, using Grading A or Reference 11, exceeds 40 percent by weight at 500 revolutions. Acceptance of source and aggregates is based on the tests specified in Table 3.8.4-3.

Water and ice used in mixing concrete do not contain more than 250 parts per million of chlorides (as Cl) as determined in accordance with Reference 12. They do not contain more than 2000 parts per million of total solids as determined in accordance with Reference 13. Water meets the criteria in Table 3.8.4-4 in regard to the effects of the proposed mixing water on hardened cement pastes and mortars compared with distilled water.

*NRC Staff approval is required prior to implementing a change in this information; see DCD Introduction Section 3.5.

The concrete contains an air entraining admixture and may contain pozzolans and a water-reducing admixture. A viscosity modifying admixture (VMA) may be used in self-consolidating concrete (SCC) for adjusting the viscosity and improving its stability as outlined in ACI 237R, "Self-Consolidating Concrete." Admixtures, except pozzolan, are stored in liquid solution.

Admixtures do not contain added chlorides except as contained in potable drinking water used for manufacture of the admixtures. The chloride content is stated in the manufacturer's material certification.

Pozzolan conforms to Reference 14, except that the ignition loss does not exceed 6 percent.

Pozzolan is sampled and tested in accordance with Reference 15 for source approval.

Air entraining admixture conforms to Reference 16 and is the vinsol resin type.

Water-reducing admixture conforms to Reference 17 and is types A and D. Use of types A and D as limited by concrete placing temperature, least dimension of member sizes, and type of placement is as shown in Table 3.8.4-5.

Manufacturer's certification for the air entraining admixture is required demonstrating compliance with Reference 16, Section 4 requirements.

Manufacturer's certification for the water-reducing admixture is required demonstrating compliance with Reference 17, Section 5 requirements.

Manufacturer's test reports are required for each delivery of pozzolan showing the chemical composition and physical properties and certifying that the pozzolan complies with the specification.

Proportioning of the concrete mix is in accordance with Reference 18 and Option B of Reference 6.

A testing laboratory designs and tests the concrete mixes. Only mixes meeting the design requirements specified for concrete are used.

Forms for concrete are designed as recommended in ACI 347.

3.8.4.6.1.2 Reinforcing Steel

Reinforcing bars for concrete are deformed bars according to Reference 19, Grade 60, and Reference 20. Certified material test reports are provided by the supplier for each heat of reinforcing steel delivered showing physical (both tensile and bend test results) and chemical analysis. In addition, a minimum of one tensile test is performed for each 50 tons of each bar size produced from each heat of steel.

In areas where reinforcing steel splices are necessary and lap splices are not practical, mechanical connections (e.g., threaded splices, swaged sleeves or cadwelds) are used.

Headed reinforcement meeting the requirements of ASTM A970 (Reference 49) is used where mechanical anchorage is required, such as for shear reinforcement in the nuclear island basemat and in the exterior walls below grade.

As stated in subsection 3.4.1.1.1, seismic Category I structures that are located below grade elevation are protected against flooding by a waterproofing system and waterstops. This, in conjunction with the 2 inches of concrete cover for the reinforcing steel, provides sufficient protection for the reinforcing steel. Therefore, the use of coated reinforcing steel is not planned.

3.8.4.6.1.3 Structural Steel

Basic materials used in the structural and miscellaneous steel construction conform to the ASTM standards listed in Table 3.8.4-6.

3.8.4.6.1.4 Masonry Walls

There are no safety-related masonry walls used in the nuclear island.

3.8.4.6.2 Quality Control

The quality assurance program is described in Chapter 17. Conformance to Regulatory Guide 1.94 is as described in Section 1.9.

3.8.4.6.3 Special Construction Techniques

Construction techniques for the structural modules are the same as special construction techniques for the containment internal structures discussed previously in subsection 3.8.3.6.1.

3.8.4.7 Testing and In-Service Inspection Requirements

Structures supporting the passive containment cooling water storage tank on the shield building roof will be examined before and after first filling of the tank.

- The boundaries of the passive containment cooling water storage tank and the tension ring of the shield building roof will be inspected visually for excessive concrete cracking before and after first filling of the tank. Any significant concrete cracking will be documented and evaluated in accordance with ACI 349.3R-96 (reference 50).

- The vertical elevation of the passive containment cooling water storage tank relative to the top of the shield building cylindrical wall at the tension ring will be measured before and after first filling. The change in relative elevation will be compared against the predicted deflection.

- A report will be prepared summarizing the test and evaluating the results.

There are no other in-service testing or inspection requirements for the seismic Category I shield building and auxiliary building. However, during the operation of the plant the condition of these

structures should be monitored by the Combined License holder to provide reasonable confidence that the structures are capable of fulfilling their intended functions.

3.8.4.8 Construction Inspection

Construction inspection is conducted to verify the concrete wall thickness and quantity of concrete reinforcement. The construction inspection includes concrete wall thickness and reinforcement expressed in units of in^2/ft (linear length) equivalent when compared to standard reinforcement bar sections. Inspections will be measured at applicable sections excluding designed openings or penetrations. Inspections will confirm that each applicable section provides the minimum required reinforcement and concrete thickness as shown in Appendix 3H. The minimum required reinforcement and concrete thickness represents the minimum values to meet the design basis loads. Appendix 3H also indicates the reinforcement provided which may exceed the minimum required reinforcement for the following reasons:

- Structural margin
- Ease of construction
- Use of standardized reinforcement sizes and spacing

3.8.5 Foundations

3.8.5.1 Description of the Foundations

The nuclear island structures, consisting of the containment building, shield building, and auxiliary building are founded on a common 6-foot-thick, cast-in-place, reinforced concrete basemat foundation. The top of the foundation is at elevation 66′-6″.

Adjoining buildings, such as the radwaste building, turbine building, and annex building are structurally separated from the nuclear island structures by a 2-inch gap at and below the grade. A 4-inch minimum gap is provided above grade. This provides space to prevent interaction between the nuclear island structures and the adjacent structures during a seismic event. Figure 3.8.5-1 shows the foundations for the nuclear island structures and the adjoining structures.

Resistance to sliding of the concrete basemat foundation is provided by passive soil pressure and soil friction. This provides the required factor of safety against lateral movement under the most stringent loading conditions.

For ease of construction, the foundation is built on a mud mat. The mud mat is lean, nonstructural concrete and rests upon the load-bearing soil. Waterproofing requirements are described in subsection 3.4.1.1.1.

3.8.5.2 Applicable Codes, Standards, and Specifications

The applicable codes, standards, and specifications are described in subsection 3.8.4.2.

3.8.5.3 Loads and Load Combinations

Loads and load combinations are described in subsection 3.8.4.3. As described in subsection 3.8.2.1.2, the bottom head of the steel containment vessel is the same as the upper head and is capable of resisting the containment internal pressure without benefit of the nuclear island basemat. However, containment pressure loads affect the nuclear island basemat since the concrete is stiffer than the steel head. The containment design pressure is included in the design of the nuclear island basemat as an accident pressure in load combinations 5, 6, and 7 of Table 3.8.4-2. In addition to the load combinations described in subsection 3.8.4.3, the nuclear island is checked for resistance against sliding and overturning due to the safe shutdown earthquake, winds and tornados, and against flotation due to floods and groundwater according to the load combinations presented in Table 3.8.5-1.

3.8.5.4 Design and Analysis Procedures

The seismic Category I structures are concrete, shear-wall structures consisting of vertical shear/bearing walls and horizontal floor slabs. The walls carry the vertical loads from the structure to the basemat. Lateral loads are transferred to the walls by the roof and floor slabs. The walls then transmit the loads to the basemat. The walls also provide stiffness to the basemat and distribute the foundation loads between them.

The design of the basemat consists primarily of applying the design loads to the structures, calculating shears and moments in the basemat, and determining the required reinforcement. For a site with hard rock below the underside of the basemat vertical loads are transmitted directly through the basemat into the rock. Horizontal loads due to seismic are distributed on the underside of the basemat resulting primarily in small membrane forces in the mat. The 6-foot-thick basemat is designed for the upward hydrostatic pressure due to groundwater reduced by the downward deadweight of the mat.

3.8.5.4.1 Analyses for Loads during Operation

The analyses of the basemat use the three-dimensional ANSYS finite element models of the auxiliary building and containment internal structures, which are described in subsection 3.7.2.3 and shown in Figures 3.7.2-1 and 3.7.2-2. The model considers the interaction of the basemat with the overlying structures and with the soil. Provisions are made in the model for two possible uplifts. One is the uplift of the containment internal structures from the lower basemat. The other is the uplift of the basemat from the soil.

The three-dimensional finite element model of the basemat includes the structures above the basemat and their effect on the distribution of loads on the basemat. The finite element model of the basemat is shown on sheet 1 of Figure 3.8.5-2.

The subgrade is modeled with one vertical spring and two horizontal springs at each node of the basemat. The vertical springs act in compression only. The horizontal springs are active when the vertical spring is closed and inactive when the vertical spring lifts off. The analyses of the basemat accounted for the range of soil sites described in Section 2.5. Horizontal bearing reactions on the side walls below grade are conservatively neglected.

The nuclear island basemat below the containment vessel, and the containment internal structures basemat above the containment vessel, are simulated with solid tetrahedral elements. Nodes on the two basemats are connected with spring elements normal to the theoretical surface of the containment vessel.

Normal and extreme environmental loads and containment pressure loads are considered in the analysis. The normal loads include dead loads and live loads. Extreme environmental loads include the safe shutdown earthquake.

Dead loads are applied as inertia loads. Live loads and the safe shutdown earthquake loads are applied as concentrated loads on the nodes. The safe shutdown earthquake loads are applied as equivalent static loads using the assumption that while maximum response from one direction occurs, the responses from the other two directions are 40 percent of the maximum. Combinations of the three directions of the safe shutdown earthquake are considered.

Linear analyses are performed for all specified load combinations assuming that the soil springs can take tension. Critical load cases are then selected for non-linear analyses with basemat liftoff based on the results of the linear cases. The results from the analysis include the forces, shears, and moments in the basemat; the bearing pressures under the basemat; and the area of the basemat that is uplifted. Reinforcing steel areas are calculated from the member forces for each load combination case.

The required reinforcing steel for the portion of the basemat under the auxiliary building and under the shield building is determined by considering the reinforcement envelope for the full non-linear iteration of the most critical load combination cases. Additional reinforcement is provided in the design of the 6′ mat for soil sites such that the basemat can resist loads 20 percent greater than the demand calculated by the equivalent static acceleration analyses on uniform soil springs. This increase accommodates potential site specific lateral variability of the soil investigated separately in a series of paramedic studies. Figure 3.8.5-3 shows the basemat reinforcement.

3.8.5.4.2 Analyses of Settlement During Construction

Construction loads are evaluated in the design of the nuclear island basemat. This evaluation is performed for soil sites meeting the site interface requirements of subsection 2.5.4 at which settlement is predicted to be maximum. In the expected basemat construction sequence, concrete for the mat is placed in a single placement. The placement includes the first 6 feet of the thicker basemat below the containment vessel and shield building, but excludes the central zone directly below the bottom of the containment vessel. Construction continues with a portion of the shield building foundation and containment internal structure and the walls of the auxiliary building. The critical location for shear and moment in the basemat is around the perimeter of the shield building. Once the shield building and auxiliary building walls are completed to elevation 82′ -6″, the load path changes and loads are resisted by the basemat stiffened by the shear walls.

The analyses account for the construction sequence, the associated time varying load and stiffness of the nuclear island structures, and the resulting settlement time history. To maximize the potential settlement, the analyses consider a 360 feet deep soft soil site with soil properties

consistent with the soft soil case described in subsection 2A.2. Two soil profiles are analyzed to represent limiting foundation conditions, and address both cohesive and cohesionless soils and combinations thereof:

- A soft soil site with alternating layers of sand and clay. The assumptions in this profile maximize the settlement in the early stages of construction and maximize the impact of dewatering.

- A soft soil site with clay. The assumptions maximize the settlement during the later stages of construction and during plant operation.

The analyses focus on the response of the basemat in the early stages of construction when it could be susceptible to differential loading and deformations. As subsequent construction incorporates concrete shear walls associated with the auxiliary building and the shield building, the structural system significantly strengthens, minimizing the impact of differential settlement. The displacements, and the moments and shear forces induced in the basemat are calculated at various stages in the construction sequence. These member forces are evaluated in accordance with ACI 349 using the load factors given in Table 3.8.4-2. Three construction sequences are examined to demonstrate construction flexibility within broad limits.

- A base construction sequence which assumes no unscheduled delays. The site is dewatered and excavated. Concrete for the basemat is placed in a single pour. Concrete for the exterior walls below grade is placed after the basemat is in place. Exterior and interior walls of the auxiliary building are placed in 16 to 18-foot lifts.

- A delayed shield building case which assumes a delay in the placement of concrete in the shield building while construction continues in the auxiliary building. This bounding case maximizes tension stresses on the top of the basemat. The delayed shield building case assumes that no additional concrete is placed in the shield building after the pedestal for the containment vessel head is constructed. The analysis incorporates construction in the auxiliary building to elevation 117′-6″ and filling the CA20 module with concrete to elevation 135′-3″, and thereafter assumes that construction is suspended.

- A delayed auxiliary building case which assumes a delay in the construction of the auxiliary building while concrete placement for the shield building continues. This bounding case maximizes tension stresses in the bottom of the basemat. The delayed auxiliary building case assumes that no concrete is placed in the auxiliary building after the basemat is constructed. The analysis incorporates construction in the shield building to elevation 84′-0″ and thereafter assumes that construction is suspended.

For the base construction sequence, the largest basemat moments and shears occur at the interface with the shield building before the connections between the auxiliary building and the shield building are credited. Once the shield building and auxiliary building walls are completed to elevation 82′ -6″, the load path for successive loads changes and the loads are resisted by the basemat stiffened by the shear walls. Dewatering is discontinued once construction reaches grade, resulting in the rebound of the subsurface.

Of the three construction scenarios analyzed, the delayed auxiliary building case results in the largest demand for the bottom reinforcement in the basemat. The delayed shield building results in the largest demand for the top reinforcement in the basemat. The analyses of the three construction sequences demonstrate the following:

- The design of the basemat and superstructure accommodates the construction-induced stresses considering the construction sequence and the effects of the settlement time history.

- The design of the basemat can accommodate delays in the shield building so long as the auxiliary building construction is suspended at elevation 117′-0″. Resumption in construction of the auxiliary building can proceed once the shield building is advanced to elevation 100′ 0″.

- The design of the basemat can accommodate delays in the auxiliary building so long as the shield building construction is suspended at elevation 84′-0″ feet. Resumption in construction of the shield building can proceed once the auxiliary building is advanced to elevation 100′ 0″.

- After the structure is in place and cured to elevation 100′-0″, the basemat and structure act as an integral 40 foot deep structure and the loading due to construction above this elevation is not expected to cause significant additional flexural demand with respect to the basemat and the shield building concrete below the containment vessel. Accordingly, there is no need for placing constraints on the construction sequence above elevation 100′ 0″.

The site conditions considered in the evaluation provide reasonable bounds on construction induced stresses in the basemat. Accordingly, the basemat design is adequate for practically all soil sites and it can tolerate major variations in the construction sequence without causing excessive deformations, moments and shears due to settlement over the plant life.

The analyses of alternate construction scenarios show that member forces in the basemat are acceptable subject to the following limits imposed for soft soil sites on the relative level of construction of the buildings prior to completion of both buildings at elevation 82′-6″:

- Concrete may not be placed above elevation 84′-0″ for the shield building or containment internal structure.

- Concrete may not be placed above elevation 117′-6″ in the auxiliary building, except in the CA20 structural module, where it may be placed to elevation 135′-3″.

Member forces in the basemat considering settlement during construction differ from those obtained from the analyses on uniform elastic soil springs described in subsection 3.8.5.4.1. Although the bearing pressures at the end of construction are similar in the two analyses, the resulting member forces differ due to the progressive changes in structural configuration during construction. The design using the results of the analyses of subsection 3.8.5.4.1 provides sufficient structural strength to resist the specified loads including bearing reactions on the

underside of the basemat. The member forces in these analyses are those due to primary externally applied loads and do not consider secondary stresses and strains locked in during early stages of construction. A confirmatory evaluation was performed to demonstrate that the member forces due to design basis loads, including locked-in forces due to construction settlement, remain within the capacity of the section. The evaluation was performed for critical locations which were selected as locations where the effect of locked in member forces were judged to be most significant.

The governing scenario is the case with a delay in the auxiliary building construction for the soft soil site with alternating layers of sand and clay. The delay is postulated to occur just prior to the stage where the auxiliary building walls are constructed. Member forces at the end of construction are calculated considering the effects of settlement during construction. The difference in these member forces from those calculated for dead load in the analyses on soil springs are added as additional dead loads in the critical safe shutdown earthquake load combination.

The member forces for the load combination of dead load plus safe shutdown earthquake, including the member forces locked-in during various stages of plant construction, are within the design capacity for the five critical locations. The evaluation demonstrates that the member forces including locked-in forces calculated by elastic analyses remain within the capacity of the section.

3.8.5.4.3 Design Summary Report

A design summary report is prepared for the basemat documenting that the structures meet the acceptance criteria specified in subsection 3.8.5.5.

Deviations from the design due to as-procured or as-built conditions are acceptable based on an evaluation consistent with the methods and procedures of Sections 3.7 and 3.8 provided the following acceptance criteria are met.

- The structural design meets the acceptance criteria specified in Section 3.8
- The seismic floor response spectra meet the acceptance criteria specified in subsection 3.7.5.4

Depending on the extent of the deviations, the evaluation may range from documentation of an engineering judgement to performance of a revised analysis and design. The results of the evaluation will be documented in an as-built summary report.

3.8.5.4.4 Design Summary of Critical Sections

The basemat is designed to meet the acceptance criteria specified in subsection 3.8.4.5. Two critical portions of the basemat are identified below together with a summary of their design. The boundaries are defined by the walls and column lines which are shown in Figure 3.7.2-12 (sheet 1 of 12). Table 3.8.5-3 shows the reinforcement required and the reinforcement provided for the critical sections.

[*Basemat between column lines 9.1 and 11 and column lines K and L*

This portion of the basemat is designed as a two way slab with the shorter directions spanning a distance of 23′6″ between the walls on column lines K and L. The slab is continuous with the adjacent slabs to the east and west. The critical loading is the bearing pressure on the underside of the slab due to dead and seismic loads. This establishes the demand for the top flexural reinforcement at mid span and for the bottom flexural and shear reinforcement at the walls. The basemat is designed for the member forces from the analyses]* described in subsection 3.8.5.4.1. *The top and bottom reinforcement in the east west direction of span are equal. The reinforcement provided is shown in sheets 1, 2 and 5 of Figure 3.8.5-3. Typical reinforcement details showing use of headed reinforcement for shear reinforcement are shown in Figure 3H.5-3.*]*

[*Basemat between column lines 1 and 2 and column lines K-2 and N*

This portion of the basemat is designed as a two way slab with the shorter direction spanning a distance of 22′0″ between the walls on column lines 1 and 2. The slab is continuous with the adjacent slabs to the north and with the exterior wall to the south. The critical loading is the bearing pressure on the underside of the slab due to dead and seismic loads. This establishes the demand for the top flexural reinforcement at mid span and for the bottom flexural and shear reinforcement at wall 2. The basemat is designed for the member forces from the analyses on uniform soil springs]* described in subsection 3.8.5.4.1. [*The reinforcement provided is shown in sheets 1, 2 and 5 of Figure 3.8.5-3. Typical reinforcement details showing use of headed reinforcement for shear reinforcement are shown in Figure 3H.5-3.*]*

Deviations from the design due to as-procured or as-built conditions are acceptable based on an evaluation consistent with the methods and procedures of Sections 3.7 and 3.8 provided the following acceptance criteria are met.

- The structural design meets the acceptance criteria specified in Section 3.8
- The amplitude of the seismic floor response spectra do not exceed the design basis floor response spectra by more than 10 percent

Depending on the extent of the deviations, the evaluation may range from documentation of an engineering judgement to performance of a revised analysis and design.

3.8.5.5 Structural Criteria

The analysis and design of the foundation for the nuclear island structures are according to ACI-349 with margins of structural safety as specified within it. The limiting conditions for the foundation medium, together with a comparison of actual capacity and estimated structure loads, are described in Section 2.5. The minimum required factors of safety against sliding, overturning, and flotation for the nuclear island structures are given in Table 3.8.5-1.

*NRC Staff approval is required prior to implementing a change in this information; see DCD Introduction Section 3.5.

[*The basemat below the auxiliary building is designed for shear in accordance with the provisions for continuous deep flexural members in paragraph 11.8.3 of ACI 349-01. As permitted by paragraph 11.5.5.1 of ACI 349-01, shear reinforcement is not provided when the factored shear force, V_u, is less than one half of the shear strength provided by the concrete, φV_c.*]*

3.8.5.5.1 Nuclear Island Maximum Bearing Pressures

The foundation will be demonstrated to be capable of withstanding the bearing demand from the nuclear island as described in subsection 2.5.4.5.6.

3.8.5.5.2 Flotation

The factor of safety against flotation of the nuclear island is shown in Table 3.8.5-2 and is calculated as follows:

$$F.S. = \frac{D}{(F \text{ or } B)}$$

where:

F.S. = factor of safety against flotation
D = total weight of structures and foundation
F = buoyant force due to the design basis flood
B = buoyant force due to high ground water table

3.8.5.5.3 Sliding

The factor of safety against sliding of the nuclear island during a tornado or a design wind is shown in Table 3.8.5-2 and is calculated as follows:

$$F.S. = \frac{F_S + F_P}{F_H}$$

where:

F.S. = factor of safety against sliding from tornado or design wind
F_S = shearing or sliding resistance at bottom of basemat
F_P = maximum soil passive pressure resistance, neglecting surcharge effect
F_H = maximum lateral force due to active soil pressure, including surcharge, and tornado or design wind load

*NRC Staff approval is required prior to implementing a change in this information; see DCD Introduction Section 3.5.

The factor of safety against sliding of the nuclear island during a safe shutdown earthquake is shown in Table 3.8.5-2 and is calculated as follows:

$$F.S. = \frac{F_s + F_p}{F_D + F_H}$$

where:

F.S. = factor of safety against sliding from a safe shutdown earthquake
F_S = shearing or sliding resistance at bottom of basemat
F_P = maximum soil passive pressure resistance, neglecting surcharge effect
F_D = maximum dynamic lateral force, including dynamic active earth pressures
F_H = maximum lateral force due to all loads except seismic loads

The sliding resistance is based on the friction force developed between the basemat and the foundation. The governing friction value in the interface zone is a thin soil layer below the mudmat with an angle of internal friction of 35° giving a coefficient of friction of 0.70. The effect of buoyancy due to the water table is included in calculating the sliding resistance.

3.8.5.5.4 Overturning

The factor of safety against overturning of the nuclear island during a tornado or a design wind is shown in Table 3.8.5-2 and is calculated as follows:

$$F.S. = \frac{M_R}{M_O}$$

where:

F.S. = factor of safety against overturning from tornado or design wind
M_R = resisting moment
M_O = overturning moment of tornado or design wind

The factor of safety against overturning of the nuclear island during a safe shutdown earthquake is shown in Table 3.8.5-2 and is evaluated using the static moment balance approach assuming overturning about the edge of the nuclear island at the bottom of the basemat. The factor of safety is defined as follows:

$$F.S. = (M_R + M_P)/(M_O + M_{AO})$$

where:

F.S. = factor of safety against overturning from a safe shutdown earthquake
M_R = nuclear island's resisting moment against overturning
M_O = maximum safe shutdown earthquake induced overturning moment acting on the nuclear island, applied as a static moment

M_P = Resistance moment associated with passive pressure
M_{AO} = Moment due to lateral forces caused by active and overburden pressures

The resisting moment is equal to the nuclear island dead weight, minus buoyant force from ground water table, multiplied by the distance from the edge of the nuclear island to its center of gravity. The overturning moment is the maximum moment about the same edge from the time history analyses of the nuclear island lumped mass stick model described in subsection 3.7.2.

3.8.5.5.5 Effect of Nuclear Island Basemat Uplift on Seismic Response

The effects of basemat uplift were evaluated using an east-west lumped-mass stick model of the nuclear island structures supported on a rigid basemat with nonlinear springs. Floor response spectra from safe shutdown earthquake time history analyses, which included basemat uplift, were compared to those from analyses that did not include uplift. The comparisons showed that the effect of basemat uplift on the floor response spectra is not significant.

3.8.5.6 Materials, Quality Control, and Special Construction Techniques

The materials and quality control program used in the construction of the nuclear island structures foundation are described in subsection 3.8.4.6.

There are no special construction techniques used in the construction of the nuclear island structures foundation. Subsection 2.5.4.5.3 describes information related to the excavation, backfill, and mudmat.

3.8.5.7 In-Service Testing and Inspection Requirements

There are no in-service testing or inspection requirements for the nuclear island structures foundation.

The need for foundation settlement monitoring is site-specific as discussed in subsection 2.5.4.5.10.

3.8.5.8 Construction Inspection

Construction inspection is conducted to verify the concrete wall thickness and quantity of concrete reinforcement. The construction inspection includes concrete wall thickness and reinforcement expressed in units of in^2/ft (linear length) equivalent when compared to standard reinforcement bar sections. Inspections will be measured at applicable sections excluding designed openings or penetrations. Inspections will confirm that each section provides the minimum required reinforcement and concrete thickness as shown in Table 3.8.5-3. The minimum required reinforcement and concrete thickness represent the required minimum values to meet the design basis loads. Table 3.8.5-3 also indicates the reinforcement provided which may exceed the required minimum reinforcement for the following reasons:

- Structural margin
- Ease of construction
- Use of standardized reinforcement sizes and spacing

3.8.6 Combined License Information

3.8.6.1 Containment Vessel Design Adjacent to Large Penetrations

The Combined License information requested in this subsection has been completely addressed in APP-GW-GLR-005 (Reference 53), and the applicable changes are incorporated into the DCD. No additional work is required by the Combined License applicant to address the Combined License information requested in this subsection.

The following words represent the original Combined License Information Item commitment, which has been addressed as discussed above:

> The final design of containment vessel elements (reinforcement) adjacent to concentrated masses (penetrations) is completed by the Combined License applicant and documented in the ASME Code design report in accordance with the criteria described in subsection 3.8.2.4.1.2.

3.8.6.2 Passive Containment Cooling System Water Storage Tank Examination

Not used.

3.8.6.3 As-Built Summary Report

Not used.

3.8.6.4 In-Service Inspection of Containment Vessel

Not used.

3.8.7 References

1. D. Bushnell, "BOSOR5 – Program for buckling of elastic-plastic complex shells of revolution including large deflections and creep," Computers and Structures, Vol. 6, pp 221-239, 1976.

2. C. D. Miller, R. B. Grove, J. G. Bennett, "Pressure Testing of Large Scale Torispherical Heads Subject to Knuckle Buckling," NUREG/CP-0065, Transactions of the International Conference on Structure Mechanics in Reactor Technology, August 1985.

3. "Leak and Structural Test of Personnel Airlock for LWR Containments Subjected to Pressures and Temperatures beyond Design Limits," NUREG/CR-5118, SAND88-7155, May 1989.

4. "Analysis of Bellows Expansion Joints in the Sequoyah Containment," NUREG/CR-5561, SAND90-7020, December 1991.

5. "Severe Accident Testing of Electrical Penetration Assemblies," NUREG/CR-5334, SAND89-0327, November 1989.

6. ASTM C 94, "Specifications for Ready-Mixed Concrete."

7. ACI 304, "Guide for Measuring, Mixing, Transporting, and Placing Concrete."

8. ASTM C 150, "Specification for Portland Cement."

9. ASTM C 33, "Specification for Concrete Aggregates."

10. ASTM C 131, "Resistance to Abrasion of Small Size Coarse Aggregate by Use of the Los Angeles Machine."

11. ASTM C 535, "Test Method for Resistance to Degradation of Large-Size Coarse Aggregate by Abrasion and Impact in the Los Angeles Machine."

12. ASTM D 512, "Chloride Ion in Industrial Water."

13. ASTM C 1603, "Standard Test Method for Measurement of Solids in Water."

14. ASTM C 618, "Fly Ash and Raw or Calcined Natural Pozzolans for Use in Portland Cement Concrete."

15. ASTM C 311, "Sampling and Testing Fly Ash or Natural Pozzolans for Use as Mineral Admixture in Portland Cement Concrete."

16. ASTM C 260, "Air Entraining Admixtures for Concrete."

17. ASTM C 494, "Chemical Admixtures for Concrete."

18. ACI 211.1, "Standard Practice for Selecting Proportions for Normal, Heavy Weight, and Mass Concrete."

19. ASTM A 615, "Deformed and Plain Billet Steel Bars for Concrete Reinforcement."

20. ASTM A 706, "Low Alloy Steel Deformed Bars for Concrete Reinforcement."

21. ANSYS Engineering Analysis User's Manual, Releases up to and including ANSYS 5.7, ANSYS Inc.

22. D. Bushnell, "Elastic-Plastic Buckling of Internally Pressurized Ellipsoidal Pressure Vessel Heads," Welding Research Council Bulletin 267, May 1981.

23. J. G. Bennett, "An Assessment of Loss-of-Containment Potential Because of Knuckle Buckling for 4:1 Steel Containment Heads," NUREG/CR-4926, LA-10972-MS, April 1987. (This Report also includes the Contractor's Report: "Buckling and Rupture Tests of Two Fabricated Torispherical Heads under Internal Pressure," by R. B. Grove, S. W. Peters, C. D. Miller, and M. F. Eder, C.B.I. Industries, Inc. Research Laboratory.)

24. D. Bushnell, "Stress, Stability, and Vibration of Complex Branched Shells of Revolution: Analysis and User's Manual for BOSOR-4," LMSC-D243605, Lockheed Missiles and Space, Palo Alto, Cal., 1972.

25. "Evaluation of Seals for Mechanical Penetrations of Containment Buildings," NUREG/CR-5096 SAND88-7016.

26. "Experimental Results from Containment Piping Bellows Subjected to Severe Accident Conditions," NUREG/CR-6154, SAND94-1711, Vol. 1, September 1994.

27. H. Akiyama, H. Sekimoto, M. Tanaka, K. Inoue, M. Fukihara, Y. Okuda, "1/10th Scale Model Test of Inner Concrete Structure Composed of Concrete Filled Steel Bearing Wall," 10th International Conference on Structural Mechanics in Reactor Technology, 1989.

28. H. Akiyama, H. Sekimoto, M. Fukihara, K. Nakanashi, K. Hara, "A Compression and Shear Loading Test of Concrete Filled Steel Bearing Wall," 11th International Conference on Structural Mechanics in Reactor Technology, 1991.

29. T. Fukumoto, B. Kato, et al., "Concrete Filled Steel Bearing Walls," IABSE Symposium, Paris-Versailles, 1987.

30. P. F. Adams, T. J. E. Zimmerman, "Design and Behaviour of Composite Ice-Resisting Walls," "Steel/Concrete Composite Structural Systems," C-FER Publication No. 1, Proceedings of a special symposium held in conjunction with POAC '87, Fairbanks, Alaska, 9th International Conference on Port and Ocean Engineering under Arctic Conditions, 1987.

31. B. O'Flynn, J. G. MacGregor, "Tests on Composite Ice-Resisting Walls," "Steel/Concrete Composite Structural Systems," C-FER Publication No. 1, Proceedings of a special symposium held in conjunction with POAC '87, Fairbanks, Alaska, 9th International Conference on Port and Ocean Engineering under Arctic Conditions, 1987.

32. F. Ohno, T. Shioya, Y. Nagasawa, G. Matsumoto, T. Okada, T. Ota, "Experimental Studies on Composite Members for Arctic Offshore Structures," "Steel/Concrete Composite Structural Systems," C-FER Publication No. 1, Proceedings of a special symposium held in conjunction with POAC '87, Fairbanks, Alaska, 9th International Conference on Port and Ocean Engineering under Arctic Conditions, 1987.

33. M. Matsuishi, S. Iwata, "Strength of Composite System Ice-Resisting Structures," "Steel/Concrete Composite Structural Systems," C-FER Publication No. 1, Proceedings of a special symposium held in conjunction with POAC '87, Fairbanks, Alaska, 9th International Conference on Port and Ocean Engineering under Arctic Conditions, 1987.

34. Fitch, J. R. et al., "Source Load Approach to Evaluate Boiling Water Reactor Pressure Suppression Containment Loads," Proceedings Eighth SMIRT, Paper J 7/3, 1985.

35. WCAP-13891, Revision 0 (Proprietary) and WCAP-14095, Revision 0 (Non-Proprietary), AP600 Automatic Depressurization System Phase A Test Data Report, May 1994.

36. WCAP-14324, Revision 0 (Proprietary) and WCAP-14325, Revision 0 (Non-Proprietary), Final Data Report for ADS Phase B1 Tests, April 1995.

37. De Salvo G. J., Gorwan A. W., ANSYS Engineering Analysis System User's Manual Revision 4.4 (including Revision 4.4.A) May 30, 1990.

38. M. P. Collins, D. Mitchell, P. Adebar, F. J. Vecchio, "General Shear Design Method," ACI Structural Journal, Vol 93, No. 1, January - February 1996.

39. Bhide and Collins, "Influence of Axial Tension on the Shear Capacity of Reinforced Concrete Members," ACI Structural Journal, September-October 1989.

40. K. Sorensen, O. Loset and T. O. Olsen, "Investigations of the Influence of Axial Tensile Forces on the Transverse Shear Strength," Report No. PP1-1-5, Det Norske Veritas, Oslo, June 1981.

41. S. B. Bhide and M. P. Collins, "Reinforced Concrete Elements in Shear and Tension," Publication No. 87-02, Department of Civil Engineering, University of Toronto, January 1987.

42. P. E. Adebar, "Shear Design of Concrete Offshore Structures," Doctoral Thesis in the University of Toronto, 1989.

43. M. W. Kani, M. W. Huggins, R. R. Wittkopp, "Kani on Shear and Torsion in Reinforced Concrete," Department of Civil Engineering, University of Toronto, 1979.

44. "Guide to Stability Design Criteria for Metal Structures," edited by B. G. Johnston, 3rd Edition.

45. Bressler, Lin and Scalzi, "Design of Steel Structures," Second Edition.

46. ASCE Standard ASCE/SEI 43-05, "Seismic Design Criteria for Structures, Systems, and Components in Nuclear Facilities," 2005.

47. Not used.

48. Not used.

49. ASTM A 970, "Specification for Welded Headed Bars for Concrete Reinforcement."

50. ACI 349.3R-96, "Evaluation of Existing Nuclear Safety-Related Concrete Structures."

51. Letter DCP/NRC 1340, April 7, 1998 from Brian A. McIntyre, Westinghouse Electric Company, to T. R. Quay, Nuclear Regulatory Commission, Enclosure 1.

52. WCAP-15613, Revision 0 (Proprietary) and WCAP-15706, Revision 0 (Non-Proprietary), AP1000 PIRT and Scaling Assessment, March 2001.

53. APP-GW-GLR-005, "Containment Vessel Design Adjacent to Large Penetration," Westinghouse Electric Company LLC.

54. APP-GW-GLR-021, "AP1000 As-Built COL Information Items," Westinghouse Electric Company LLC.

55. APP-GW-GLN-113, "AP1000 Containment Vessel Shell: Material Specification," Westinghouse Electric Company LLC.

Table 3.8.2-1

LOAD COMBINATIONS AND SERVICE LIMITS FOR CONTAINMENT VESSEL

Load Description		Load Combination and Service Limit											
		Con	**Test**	**Des.**	**Des.**	**A**	**A**	**A**	**C**	**D**	**C**	**D**	**D**
Dead	D	x	x	x	x	x	x	x	x	x	x	x	x
Live	L	x	x	x	x	x	x	x	x	x	x	x	x
Wind	W	x				x							
Safe shutdown earthquake	E_s								x	x		x	x
Tornado	W_t										x		
Test pressure	P_t		x										
Test temperature	T_t		x										
Operating pressure	P_o										x		
Design pressure	P_d			x			x		x			x	
External pressure (2.9 psid)	P_e				x			x		x			
External pressure (0.9 psid)(3)	P_e					x							x
Normal reaction	R_o				x	x		x		x	x		
Normal thermal	T_o				(4)	(5)		(4)		(4)	(4)		(5)
Accident thermal reactions	R_a			x			x		x			x	
Accident thermal	T_a			x			x		x			x	
Accident pipe reactions	Y_r											x	
Jet impingement	Y_j											x	
Pipe impact	Y_m											x	

Notes:

1. Service limit levels are per ASME-NE.
2. Where any load reduces the effects of other loads, that load is to be taken as zero, unless it can be demonstrated that the load is always present or occurs simultaneously with the other loads.
3. Reduced pressure of 0.9 psid at one hour in loss of all ac transient in cold weather.
4. Temperature of vessel is 70°F.
5. Temperature distribution for inadvertent actuation of active containment cooling in cold weather.
6. The “lowest service metal temperature” corresponding to -40°F outside temperature is -18.5°F.

Table 3.8.2-2

CONTAINMENT VESSEL PRESSURE CAPABILITIES

Containment Element		Pressure Capability				
		Deterministic Severe Accident Capacity[1]			Maximum Pressure Capability[2]	
Temperature		100°F	300°F	400°F	100°F	400°F
Cylinder		135 psig	117 psig	112 psig	155 psig	129 psig
Ellipsoidal Head		104 psig	91 psig	87 psig	174 psig	144 psig
16-foot equipment hatch	F.S. = 1.67	126 psig	121 psig	118 psig	210 psig	198 psig
	F.S. = 2.50	84 psig	81 psig	79 psig		
Personnel airlocks[3]		>163 psig	>163 psig	>163 psig	>300 psig	>300 psig

Notes:

1. The buckling capacity of the ellipsoidal head is taken as 60 percent of the critical buckling pressure calculated by the BOSOR-5 nonlinear analyses; the buckling capacity at higher temperatures is calculated by reducing the capacity at 100°F by the ratio of yield at 100°F to yield at the higher temperature. Evaluations of the equipment hatch covers are shown both for ASME paragraph NE-3222 (F.S. = 2.50) and Code Case N-284 (F.S. = 1.67). Evaluations of the other elements are according to ASME Service Level C.
2. The estimated maximum pressure capability is based on minimum specified material properties.
3. The capacities of the personnel airlocks are estimated from test results.

Table 3.8.2-3

ANALYSIS AND TEST RESULTS OF FABRICATED HEADS (REFERENCE 23)

	Test Model #1	Test Model #2
Cylinder radius	96.0 inches	96.0 inches
Knuckle radius	32.64 inches	32.64 inches
Spherical radius	172.8 inches	172.8 inches
Thickness	0.196 inches	0.27 inches
Head height/radius	0.5	0.5
Radius/thickness	490	356
Test initial buckling pressure	58 psig	106 psig
Test collapse pressure	229 psig	332 psig
Collapse pressure/initial buckling pressure	3.95	3.13
BOSOR-5 predicted buckling pressure	73.6 psig	106.6 psig

Table 3.8.2-4

SUMMARY OF CONTAINMENT VESSEL MODELS AND ANALYSIS METHODS

Model	Analysis Method	Program	Purpose
Axisymmetric shell	Modal analysis	ANSYS	To calculate frequencies and mode shapes for comparison against stick model
Lumped mass stick model	Modal analysis	ANSYS	To create equivalent stick model for use in nuclear island seismic analyses
Axisymmetric shell	Static analyses using Fourier harmonic loads	ANSYS	To calculate containment vessel shell stresses
Axisymmetric shell	Nonlinear bifurcation	BOSOR5	To calculate buckling capacity close to base under thermal loads To calculate pressure capacity of top head
Finite element shell	Linear bifurcation	ANSYS	To study local effect of large penetrations and embedment on buckling capacity for axial and external pressure loads
Finite element shell	Modal analysis	ANSYS	To calculate frequencies and mode shapes for local effects of equipment hatches and personnel airlocks
Finite element shell	Static analyses	ANSYS	To calculate local shell stress in vicinity of the equipment hatches and personnel airlocks

Table 3.8.3-1

SHEAR AND FLEXURAL STIFFNESSES OF STRUCTURAL MODULE WALLS

Case	Analysis Assumption	Shear Stiffness(1),(2)				Flexural Stiffness(1),(2)			
		48" Wall		30" Wall		48" Wall		30" Wall	
		GA x 10^6 lbs	Ratio	GA x 10^6 lbs	Ratio	EI x 10^9 lbs. in^2	Ratio	EI x 10^9 lbs. in^2	Ratio
1	Monolithic section considering steel plates and uncracked concrete. For shear stiffness this is (A_c G_c + A_s G_s).	83.5	1.0	55.8	1.0	47.5	1.0	13.6	1.0
2	Uncracked gross concrete section (full wall thickness considering steel plate as concrete)	73.9	0.89	46.2	0.83	33.2	0.70	8.1	0.60
3	Transformed cracked section considering steel plates and concrete (no concrete tension stiffness)	25.0	0.30	22.6	0.41	22.1	0.47	8.0	0.59

Notes:

1. The shear stiffness, GA, is calculated for the full thickness of wall. The flexural stiffness is calculated per unit length of the wall.
2. Stiffness calculations are based on the following material properties: E_c = 3,605,000 psi,n = 8, v_c = 0.17, v_s = 0.30

Table 3.8.3-2

SUMMARY OF CONTAINMENT INTERNAL STRUCTURES MODELS AND ANALYSIS METHODS

Computer Program and Model	Analysis Method	Purpose	Concrete Stiffness (1)
3D ANSYS finite element of containment internal structures	Equivalent static and Response Spectra analyses(2)	To obtain the in-plane and out-of-plane seismic forces for the design of floors and walls	Monolithic Case 3
3D ANSYS finite element of containment internal structures fixed at elevation 98′-0″	Static analyses	To obtain member forces in boundaries of IRWST for static loads (dead, live, hydrostatic, pressure)	Monolithic Case 1
3D ANSYS finite element of containment internal structures fixed at elevation 98′-0″	Static analyses	To obtain member forces in boundaries of IRWST for thermal loads	Cracked Case 3
The following AP600 analyses are used as background to develop the AP1000 design loads.			
3D ANSYS finite element of containment internal structures fixed at elevation 103′-0″	Harmonic analyses	To evaluate natural frequencies potentially excited by hydrodynamic loads	Uncracked Case 2
	Time history analyses	To obtain dynamic response of IRWST boundary for hydrodynamic loads	Monolithic and cracked Cases 1 & 3

Note:
1. See Table 3.8.3-1 for stiffness case description.
2. See Section 3.7 for discussion of the containment internal structures seismic analyses.

Table 3.8.3-3

[*DEFINITION OF CRITICAL LOCATIONS AND THICKNESSES FOR CONTAINMENT INTERNAL STRUCTURES*(1)]*

Wall Description	*Applicable Column Lines*	*Applicable Elevation Range*	*Concrete Thickness*(2)	*Thickness of Surface Plates Provided (inches)*(3)
Containment Structures				
Module Wall 1	*West wall of refueling cavity*	*Wall separating IRWST and refueling cavity from elevation 103' to 135'-3"*	*4'-0" concrete-filled structural wall module with 0.5-in.-thick steel plate on inside and outside of wall*	*0.5*
Module Wall 2	*South wall of west steam generator cavity*	*Wall separating IRWST and west steam generator cavity from elevation 103' to 135'-3"*	*2'-6" concrete-filled structural wall module with 0.5-in.-thick steel plate on inside and outside of wall*	*0.5*
CA02 Module Wall	*North east boundary wall of IRWST*	*Wall separating IRWST and maintenance floor from elevation 103' to 135'-3"*	*2'-6" concrete-filled structural wall module with 0.5-in.-thick steel plate on inside and outside of wall*	*0.5*

Notes:

1. *The applicable column lines and elevation levels are identified and included in Figures 1.2-9, 3.7.2-12 (sheets 1 through 12), 3.7.2-19 (sheets 1 through 3) and on Table 1.2-1.*
2. *The concrete thickness includes the steel face plates. Thickness greater than 3'-0" have a construction tolerance of +1", -3/4". Thickness less than or equal to 3'-0" have a construction tolerance of +1/2", -3/8".*
3. *These plate thicknesses represent the thickness provided for operating and design basis loads except for designed openings or penetrations. These values apply for each face of the applicable wall unless specifically indicated on the table.*

*NRC Staff approval is required prior to implementing a change in this information; see DCD Introduction Section 3.5.

Table 3.8.3-4 (Sheet 1 of 3)

[*DESIGN SUMMARY OF WEST WALL OF REFUELING CANAL*]*

Element Number 101870	
Plate thickness provided	*= 0.50 inches*[1]
Thermal Load Combinations	
Yield stress at design temperature	*= 55.0 ksi*
Allowable stress intensity range for load combinations (including thermal)	*= 110.0 ksi*[2]

Notes:

1. *This is a lot more than the plate thickness required for load combinations excluding thermal.*
2. *The maximum principal stress and the maximum stress intensity range for these load combinations are much lower than the allowable.*

*NRC Staff approval is required prior to implementing a change in this information; see DCD Introduction Section 3.5.

Table 3.8.3-4 (Sheet 2 of 3)

[*DESIGN SUMMARY OF WEST WALL OF REFUELING CANAL*]*

Element Number 101788	
Plate thickness provided	*= 0.50 inches*[1]
Thermal Load Combinations	
Yield stress at design temperature	*= 55.0 ksi*
Allowable stress intensity range for load combinations (including thermal)	*= 110.0 ksi*[2]

Notes:

1. *This is a lot more than the plate thickness required for load combinations excluding thermal.*
2. *The maximum principal stress and the maximum stress intensity range for these load combinations are much lower than the allowable.*

*NRC Staff approval is required prior to implementing a change in this information; see DCD Introduction Section 3.5.

Table 3.8.3-4 (Sheet 3 of 3)

[*DESIGN SUMMARY OF WEST WALL OF REFUELING CANAL*]*

Element Number 101794	
Plate thickness provided	*= 0.50 inches*[1]
Thermal Load Combinations	
Yield stress at design temperature	*= 55.0 ksi*
Allowable stress intensity range for load combinations (including thermal)	*= 110.0 ksi*[2]

Notes:

1. *This is a lot more than the plate thickness required for load combinations excluding thermal.*
2. *The maximum principal stress and the maximum stress intensity range for these load combinations are much lower than the allowable.*

*NRC Staff approval is required prior to implementing a change in this information; see DCD Introduction Section 3.5.

Table 3.8.3-5 (Sheet 1 of 3)

[*DESIGN SUMMARY OF SOUTH WALL OF STEAM GENERATOR COMPARTMENT*]*

Element Number 104228	
Plate thickness provided	*= 0.50 inches*[1]
Thermal Load Combinations	
Yield stress at design temperature	*= 36.0 ksi*
Allowable stress intensity range for load combinations (including thermal)	*= 72.0 ksi*[2]

Notes:

1. *This is a lot more than the plate thickness required for load combinations excluding thermal.*
2. *The maximum principal stress and the maximum stress intensity range for these load combinations are much lower than the allowable.*

*NRC Staff approval is required prior to implementing a change in this information; see DCD Introduction Section 3.5.

Table 3.8.3-5 (Sheet 2 of 3)

[*DESIGN SUMMARY OF SOUTH WALL OF STEAM GENERATOR COMPARTMENT*]*

Element Number 101943	
Plate thickness provided	*= 0.50 inches*[1]
Thermal Load Combinations	
Yield stress at design temperature	*= 36.0 ksi*
Allowable stress intensity range for load combinations (including thermal)	*= 72.0 ksi*[2]

Notes:

1. *This is a lot more than the plate thickness required for load combinations excluding thermal.*
2. *The maximum principal stress and the maximum stress intensity range for these load combinations are much lower than the allowable.*

*NRC Staff approval is required prior to implementing a change in this information; see DCD Introduction Section 3.5.

Table 3.8.3-5 (Sheet 3 of 3)

[*DESIGN SUMMARY OF SOUTH WALL OF STEAM GENERATOR COMPARTMENT*]*

Element Number 101933	
Plate thickness provided	*= 0.50 inches*[1]
Thermal Load Combinations	
Yield stress at design temperature	*= 36.0 ksi*
Allowable stress intensity range for load combinations (including thermal)	*= 72.0 ksi*[2]

Notes:

1. *This is a lot more than the plate thickness required for load combinations excluding thermal.*
2. *The maximum principal stress and the maximum stress intensity range for these load combinations are much lower than the allowable.*

*NRC Staff approval is required prior to implementing a change in this information; see DCD Introduction Section 3.5.

Table 3.8.3-6 (Sheet 1 of 3)

[*DESIGN SUMMARY OF NORTH-EAST WALL OF IRWST*]*

Element Number 140027	
Plate thickness provided	*= 0.50 inches*[1]
Thermal Load Combinations	
Yield stress at design temperature	*= 36.0 ksi*
Allowable stress intensity range for load combinations (including thermal)	*= 72.0 ksi*[2]

Notes:

1. *This is a lot more than the plate thickness required for load combinations excluding thermal.*
2. *The maximum principal stress and the maximum stress intensity range for these load combinations are much lower than the allowable.*

*NRC Staff approval is required prior to implementing a change in this information; see DCD Introduction Section 3.5.

Table 3.8.3-6 (Sheet 2 of 3)

[*DESIGN SUMMARY OF NORTH-EAST WALL OF IRWST*]*

Element Number 140005	
Plate thickness provided	*= 0.50 inches*[1]
Thermal Load Combinations	
Yield stress at design temperature	*= 36.0 ksi*
Allowable stress intensity range for load combinations (including thermal)	*= 72.0 ksi*[2]

Notes:

1. *This is a lot more than the plate thickness required for load combinations excluding thermal.*
2. *The maximum principal stress and the maximum stress intensity range for these load combinations are much lower than the allowable.*

*NRC Staff approval is required prior to implementing a change in this information; see DCD Introduction Section 3.5.

Table 3.8.3-6 (Sheet 3 of 3)

[*DESIGN SUMMARY OF NORTH-EAST WALL OF IRWST*]*

Element Number 140001	
Plate thickness provided	*= 0.50 inches*[1]
Thermal Load Combinations	
Yield stress at design temperature	*= 36.0 ksi*
Allowable stress intensity range for load combinations (including thermal)	*= 72.0 ksi*[2]

Notes:

1. *This is a lot more than the plate thickness required for load combinations excluding thermal.*
2. *The maximum principal stress and the maximum stress intensity range for these load combinations are much lower than the allowable.*

*NRC Staff approval is required prior to implementing a change in this information; see DCD Introduction Section 3.5.

Table 3.8.3-7

DESIGN SUMMARY OF STEEL WALL OF IRWST

Mechanical Loads Only AISC Interaction Ratio			
Section Location and Element Number	**T Section**	**L Section**	**Load Combination**
TYPICAL COLUMN AT MIDDLE OF WALL			
Top (139701)	< 1.0	< 1.0	$D + F_n + L_n + R_o$
	< 1.0	< 1.0	$D + F_r + L_r$
Mid-height (139699)	< 1.0	< 1.0	$D + F_n + L_n + R_o$
	< 1.0	< 1.0	$D + F_r + L_r$
Bottom (139690)	< 1.0	< 1.0	$D + F_n + L_n + R_o$
	< 1.0	< 1.0	$D + F_r + L_r$
ENVELOPE OF ALL LOCATIONS AND LOAD COMBINATIONS			
	< 1.0	< 1.0	

Mechanical Plus Thermal Loads Ratio of Stress to AISC or ASME (2 * Sy = 80 ksi)				
Section Location and Element Number	**Flange of T Section**	**Flange of L Section**	**Plate**	**Load Combination**
TYPICAL COLUMN AT MIDDLE OF WALL				
Top (139701)	< 1.0 AISC	< 1.0 AISC	< 1.0	$D+F_n+L_n+ADS_2+E_s+Pa_5+R_a+T_a$
Mid-height (139699)	< 1.0 AISC	< 1.0 AISC	< 1.0	$D+F_n+L_n+ADS_2+E_s+Pa_5+R_a+T_a$
Bottom (139690)	< 1.0 ASME	< 1.0 AISC	< 1.0	$D+F_n+L_n+ADS_2+E_s+Pa_5+R_a+T_a$
ENVELOPE OF ALL LOCATIONS AND LOAD COMBINATIONS				
–	< 1.0 ASME	< 1.0 ASME	< 1.0	

Note:
Results of the evaluation of mechanical and thermal loads are shown against the AISC allowables when the stresses are less than yield. Portions of the steel wall at the end of the wall exceed yield due to the restraint provided by the adjacent concrete. These areas are evaluated against the ASME allowables as described in subsection 3.8.3.5.3.4.

Table 3.8.4-1

[*LOAD COMBINATIONS AND LOAD FACTORS FOR SEISMIC CATEGORY I STEEL STRUCTURES*]*

Combination No.		***Load Combination and Factors***								
		1	***2***	***3***	***4***	***5***	***6***	***7***	***8***	***9***
Load Description										
Dead	D	*1.0*	*1.0*	*1.0*	*1.0*	*1.0*	*1.0*	*1.0*	*1.0*	*1.0*
Liquid	F	*1.0*	*1.0*	*1.0*	*1.0*	*1.0*	*1.0*	*1.0*	*1.0*	*1.0*
Live	L	*1.0*	*1.0*	*1.0*	*1.0*	*1.0*	*1.0*	*1.0*	*1.0*	*1.0*
Earth pressure	H	*1.0*	*1.0*	*1.0*	*1.0*	*1.0*	*1.0*	*1.0*	*1.0*	*1.0*
Normal reaction	R_o	*1.0*	*1.0*	*1.0*	*1.0*				*1.0*	*1.0*
Normal thermal	T_o			*1.0*	*1.0*				*1.0*	*1.0*
Wind	W		*1.0*							*1.0*
Safe shutdown earthquake	E_S			*1.0*				*1.0*		
Tornado	W_t				*1.0*					
Accident pressure	P_a					*1.0*	*1.0*	*1.0*		
Accident thermal	T_a					*1.0*	*1.0*	*1.0*		
Accident thermal reactions	R_a					*1.0*	*1.0*	*1.0*		
Accident pipe reactions	Y_r						*1.0*	*1.0*		
Jet impingement	Y_j						*1.0*	*1.0*		
Pipe impact	Y_m						*1.0*	*1.0*		
Stress Limit Coefficient [(1),(3)] *(except for compression)*		*1.0*	*1.0*	*1.6*	*1.6*	*1.6*	*1.6*	*1.7*	*1.5*	*1.5*
(for compression)		*1.0*	*1.0*	*1.4*	*1.4*	*1.4*	*1.4*	*1.6*	*1.3*	*1.3*

Notes:

1. *Allowable stress limits coefficients are applied to the basic stress allowables of AISI or AISC. The coefficients for AISC-N690 are supplemented by the requirements identified in subsection 3.8.4.5.*
2. *Where any load reduces the effects of other loads, the coefficient for that load is taken as zero unless it can be demonstrated that the load is always present or occurs simultaneously with the other loads.*
3. *In no instance does the allowable stress exceed $0.7F_u$ in axial tension nor $0.7F_u$ times the ratio of the plastic to elastic section modulus for tension plus bending.*
4. *Loads due to maximum precipitation are evaluated using load combination 4 with the maximum precipitation in place of the tornado load.*

*NRC Staff approval is required prior to implementing a change in this information; see DCD Introduction Section 3.5.

Table 3.8.4-2

[*LOAD COMBINATIONS AND LOAD FACTORS FOR SEISMIC CATEGORY I CONCRETE STRUCTURES*]*

Combination No.		***Load Combination and Factors***								
		1	***2***	***3***	***4***	***5***	***6***	***7***	***8***	***9***
Load Description										
Dead	*D*	*1.4*	*1.4*	*1.0*	*1.0*	*1.0*	*1.0*	*1.0*	*1.05*	*1.05*
Liquid	*F*	*1.4*	*1.4*	*1.0*	*1.0*	*1.0*	*1.0*	*1.0*	*1.05*	*1.05*
Live	*L*	*1.7*	*1.7*	*1.0*	*1.0*	*1.0*	*1.0*	*1.0*	*1.3*	*1.3*
Earth	*H*	*1.7*	*1.7*	*1.0*	*1.0*	*1.0*		*1.0*	*1.3*	*1.3*
Normal reaction	R_o	*1.7*	*1.7*	*1.0*	*1.0*				*1.3*	*1.3*
Normal thermal	T_o			*1.0*	*1.0*				*1.2*	*1.2*
Wind	*W*		*1.7*							*1.3*
Safe shutdown earthquake	E_s			*1.0*				*1.0*		
Tornado	W_t				*1.0*					
Accident pressure	P_a					*1.4*	*1.25*	*1.0*		
Accident thermal	T_a					*1.0*	*1.0*	*1.0*		
Accident thermal reactions	R_a					*1.0*	*1.0*	*1.0*		
Accident pipe reactions	Y_r						*1.0*	*1.0*		
Jet impingement	Y_j						*1.0*	*1.0*		
Pipe impact	Y_m						*1.0*	*1.0*		

Notes:

1. *Design for mechanical loads is in accordance with ACI-349 Strength Design Method for all load combinations. Design for combinations including thermal loads is described in subsection 3.8.3.5.3.4.*
2. *Where any load reduces the effects of other loads, the corresponding coefficient for that load is taken as 0.9 if it can be demonstrated that the load is always present or occurs simultaneously with the other loads. Otherwise the coefficient for the load is taken as zero.*
3. *Loads due to maximum precipitation are evaluated using load combination 4 with the maximum precipitation in place of the tornado load.*

*NRC Staff approval is required prior to implementing a change in this information; see DCD Introduction Section 3.5.

Table 3.8.4-3

ACCEPTANCE TESTS FOR CONCRETE AGGREGATES

Method of Test	Designation
Organic impurities in sand	ASTM C 40
Effect of organic impurities on strength of mortar	ASTM C 87
Soundness of aggregates	ASTM C 88
Material finer than No. 200 sieve	ASTM C 117
Specific gravity and absorption - coarse aggregates	ASTM C 127
Specific gravity and absorption - fine aggregates	ASTM C 128
Los Angeles abrasion of small-size coarse aggregates	ASTM C 131
Sieve analysis	ASTM C 136
Friable particles	ASTM C 142
Potential reactivity of aggregates (chemical)	ASTM C 289
Petrographic examination of aggregates	ASTM C 295
Resistance to degradation of large-size coarse aggregates by abrasion and impact in the Los Angeles machine	ASTM C 535
Potential alkali reactivity of carbonate rocks for concrete aggregates	ASTM C 586
Resistance of concrete to rapid freezing and thawing	ASTM C 666
Flat and elongated particles	CRD C 119

Table 3.8.4-4

CRITERIA FOR WATER USED IN PRODUCTION OF CONCRETE

Requirements and Test Method	Criteria
Compressive strength ASTM C 109	Reduction in strength not in excess of 10 percent
Soundness ASTM C 151	Increase in length limited to 0.10 percent
Time of setting ASTM C 191	± 10 min for initial set, ± 1 hour for final set

Table 3.8.4-5

TYPES OF WATER REDUCING AGENTS USED IN PRODUCTION OF CONCRETE

Concrete Placing Temperature	Placement Description	WRA[1] Type
70°F or less	For normal conditions	A
70°F or less	For additional retardation for members with least dimension of 3.0 feet or more	D
More than 70°F	For members except floor slabs	D
More than 70°F	For floor slabs	A

Note:
1. Water reducing agent

Table 3.8.4-6

MATERIALS USED IN STRUCTURAL AND MISCELLANEOUS STEEL

Standard	Construction Material
ASTM A1	Carbon steel rails
ASTM A36/A36M	Rolled shapes, plates, and bars
ASTM A108	Weld studs
ASTM A123	Zinc coatings (hot galvanized)
ASTM A240	Duplex 2101 stainless steel (designation S32101)
ASTM A307	Low carbon steel bolts
ASTM A325	High strength bolts
ASTM A354	Quenched and tempered alloy steel bolts (Grade BC)
ASTM A588	High-strength low alloy structural steel
ASTM-F1554	Steel anchor bolts, 36, 55, and 105-ksi Yield Strength

Table 3.8.5-1

MINIMUM REQUIRED FACTOR OF SAFETY FOR OVERTURNING AND SLIDING OF STRUCTURES

Load Combination	Overturning	Sliding	Flotation
D + H + B + W	1.5	1.5	-
D + H + B + E_S	1.1	1.1	-
D + H + B + W_t	1.1	1.1	-
D + F	-	-	1.1
D + B	-	-	1.5

where:

D = dead load excluding the fluid loads

H = lateral earth pressure

W = wind load

E_S = safe shutdown earthquake load

W_t = tornado load

F = buoyant force due to the design basis flood

B = buoyant force on submerged structure due to high ground water table

Table 3.8.5-2

FACTORS OF SAFETY FOR FLOTATION, OVERTURNING AND SLIDING OF NUCLEAR ISLAND STRUCTURES

Environmental Effect	Factor of Safety(1)
Flotation	
High Ground Water Table	3.7
Design Basis Flood	3.5
Sliding	
Design Wind, North-South	23.2
Design Wind, East-West	17.4
Design Basis Tornado, North-South	12.8
Design Basis Tornado, East-West	10.6
Safe Shutdown Earthquake, North-South	1.28(2)
Safe Shutdown Earthquake, East-West	1.33(2)
Overturning	
Design Wind, North-South	51.5
Design Wind, East-West	27.9
Design Basis Tornado, North-South	17.7
Design Basis Tornado, East-West	9.6
Safe Shutdown Earthquake, North-South	1.35
Safe Shutdown Earthquake, East-West	1.12(3)

Note:

1. Factor of safety is calculated for the envelope of the soil and rock sites described in subsection 3.7.1.4.
2. Factor of safety is shown for soils below and adjacent to nuclear island having angle of internal friction of 35 degrees.
3. ASCE/SEI 43-05, Reference 42, recognizes that there is considerable margin beyond that given by the moment balance formula and permits a nonlinear rocking analysis. The nonlinear (liftoff allowed) time history analysis described in Appendix 3G.10 showed that the nuclear island basemat uplift effect is insignificant. Further, these analyses were performed for free field seismic ZPA input as high as 0.5g without significant uplift. Therefore the factor of safety against overturning is greater than 1.67 (0.5g/0.3g).

Table 3.8.5-3

[*DEFINITION OF CRITICAL LOCATIONS AND THICKNESSES FOR NUCLEAR ISLAND BASEMAT*(1)]*

Wall or Section Description	*Applicable Column Lines*	*Applicable Elevation Level or Elevation Level Range*	*Concrete Thickness*(2)	*Reinforcement Required Vertical (in^2/ft^2)*(3)	*Reinforcement Required Horizontal (in^2/ft)*(3)	*Reinforcement Provided Vertical (in^2/ft^2)*(4)	*Reinforcement Provided Horizontal (in^2/ft)*(4)
Auxiliary Building Basemat							
Auxiliary Basemat Area	*Column line K to L and from Col. Line 11*	*From level 0 to 1*	*6'-0"*	***Shear Reinforcement*** *0.23*	***Bottom Reinforcement*** *1.6 (East-West Direction)* ***Top Reinforcement*** *1.5 (East-West Direction)*	***Shear Reinforcement*** *0.25*	***Bottom Reinforcement*** *2.25 (East-West Direction)* ***Top Reinforcement*** *2.25 (East-West Direction)*
Auxiliary Basemat Area	*Column line 1 to 2 and from Column Line K-2 to N wall*	*From level 0 to 1*	*6'-0"*	***Shear Reinforcement*** *0.47*	***Bottom Reinforcement at column line 2*** *2.25 (North-South Direction)* ***Top Reinforcement at mid-span*** *2.25 (North-South Direction)*	***Shear Reinforcement*** *0.50*	***Bottom Reinforcement*** *2.255 (North-South Direction)* ***Top Reinforcement*** *3.25 (North-South Direction)*

Notes:

1. *The applicable column lines and elevation levels are identified and included in Figures 1.2-9, 3.7.2-12 (sheets 1 through 12), 3.7.2-19 (sheets 1 through 3) and on Table 1.2-1.*
2. *These thicknesses have a construction tolerance of +1 inch, -3/4 inch.*
3. *These concrete reinforcement values represent the minimum reinforcement required for structural requirements except for designed openings, penetrations, sumps or elevator pits.*
4. *These concrete reinforcement values represent the provided reinforcement for structural requirements except for designed openings, penetrations, sumps or elevator pits.*

*NRC Staff approval is required prior to implementing a change in this information; see DCD Introduction Section 3.5.

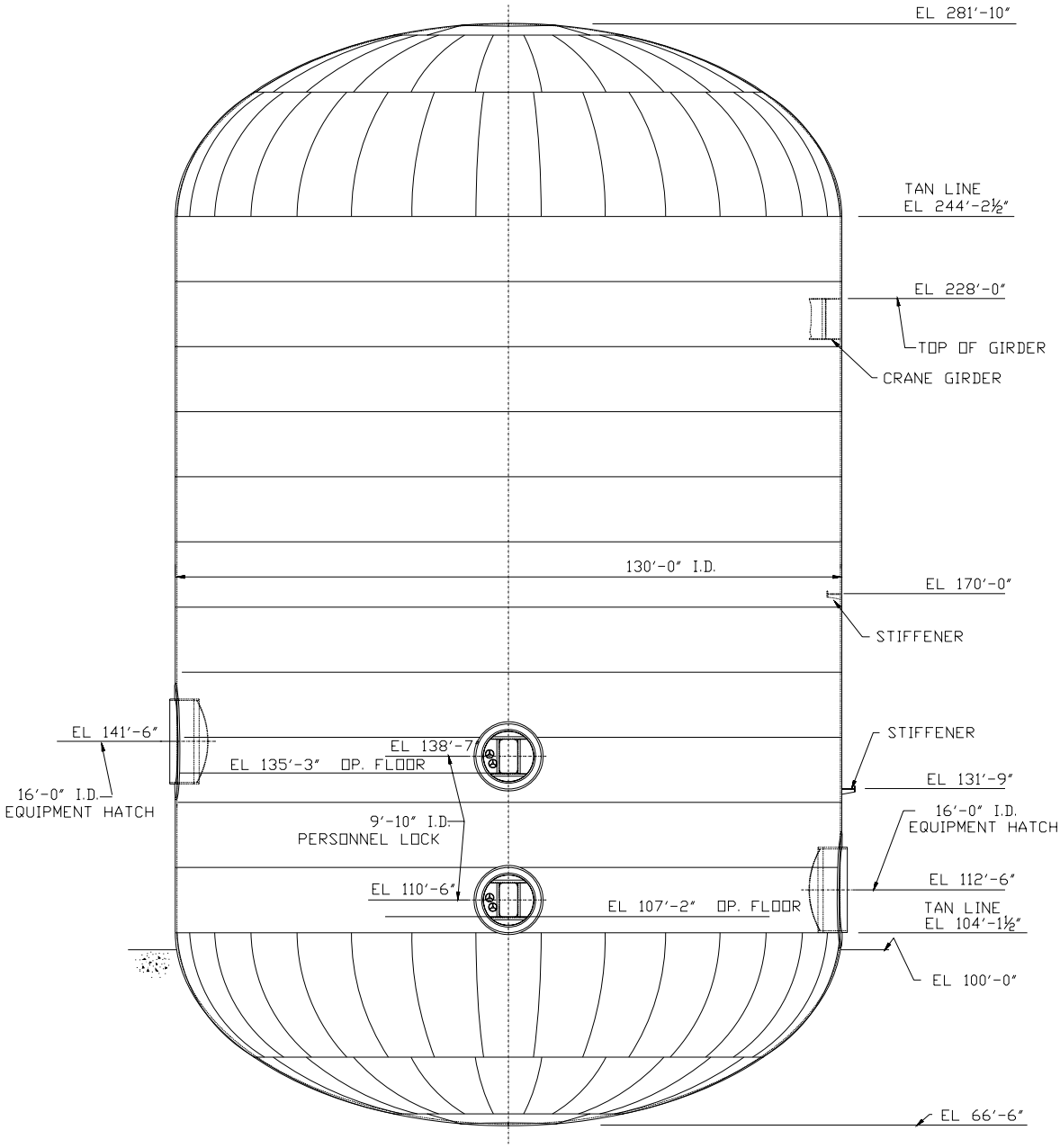

Figure 3.8.2-1 (Sheet 1 of 3)

Containment Vessel General Outline

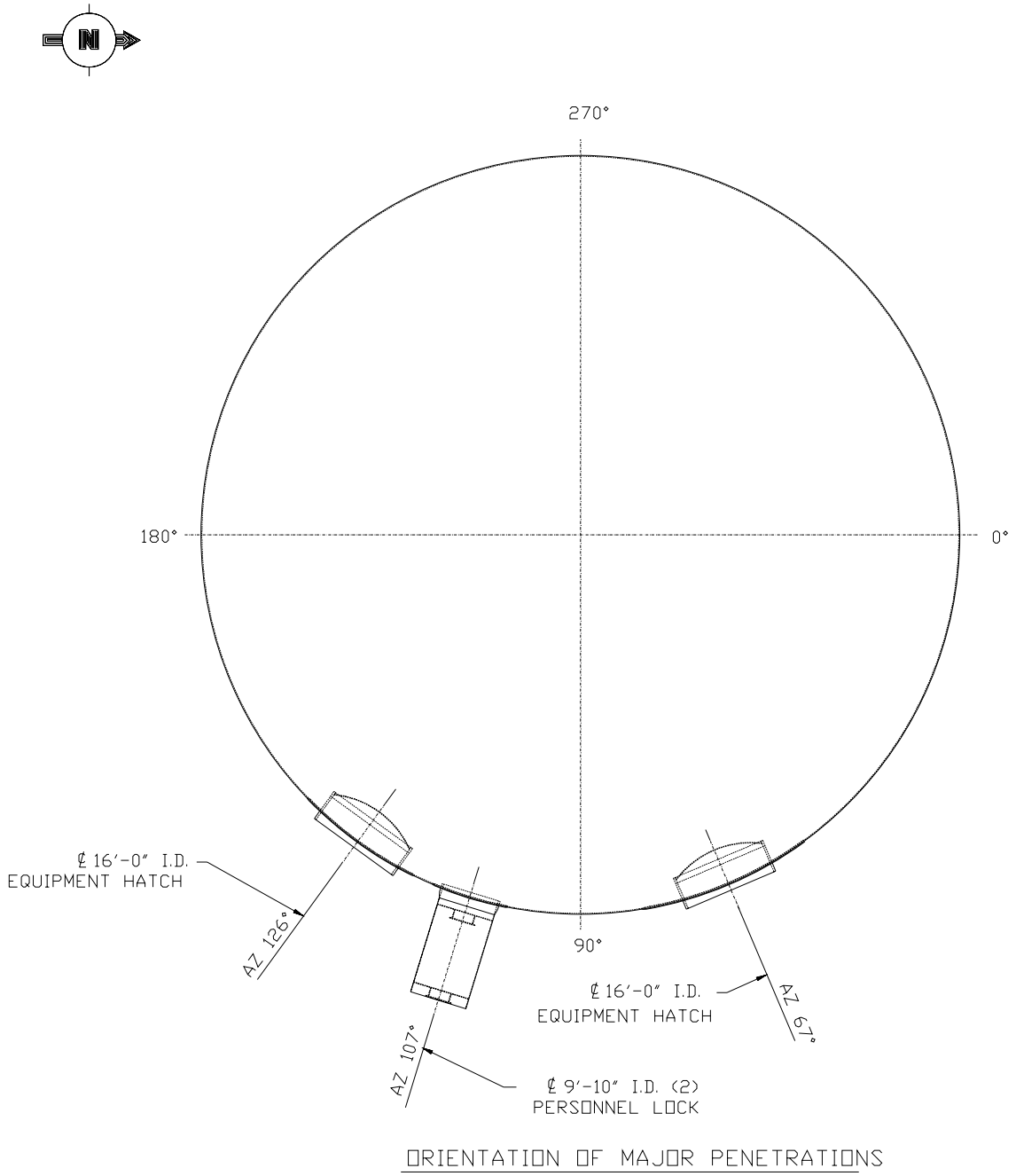

Figure 3.8.2-1 (Sheet 2 of 3)

Containment Vessel General Outline

[This page intentionally blank]

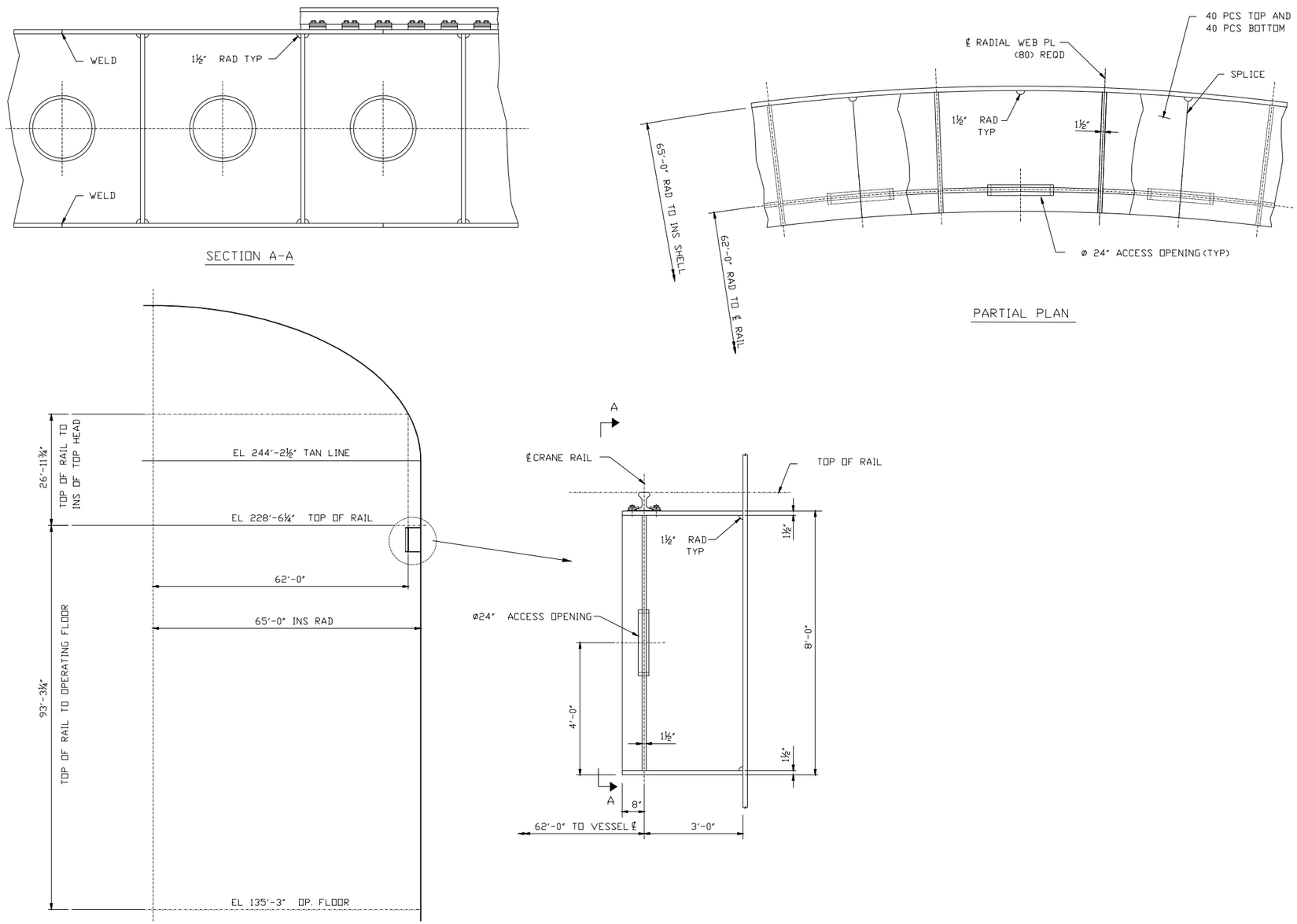

Figure 3.8.2-1 (Sheet 3 of 3)

Containment Vessel General Outline

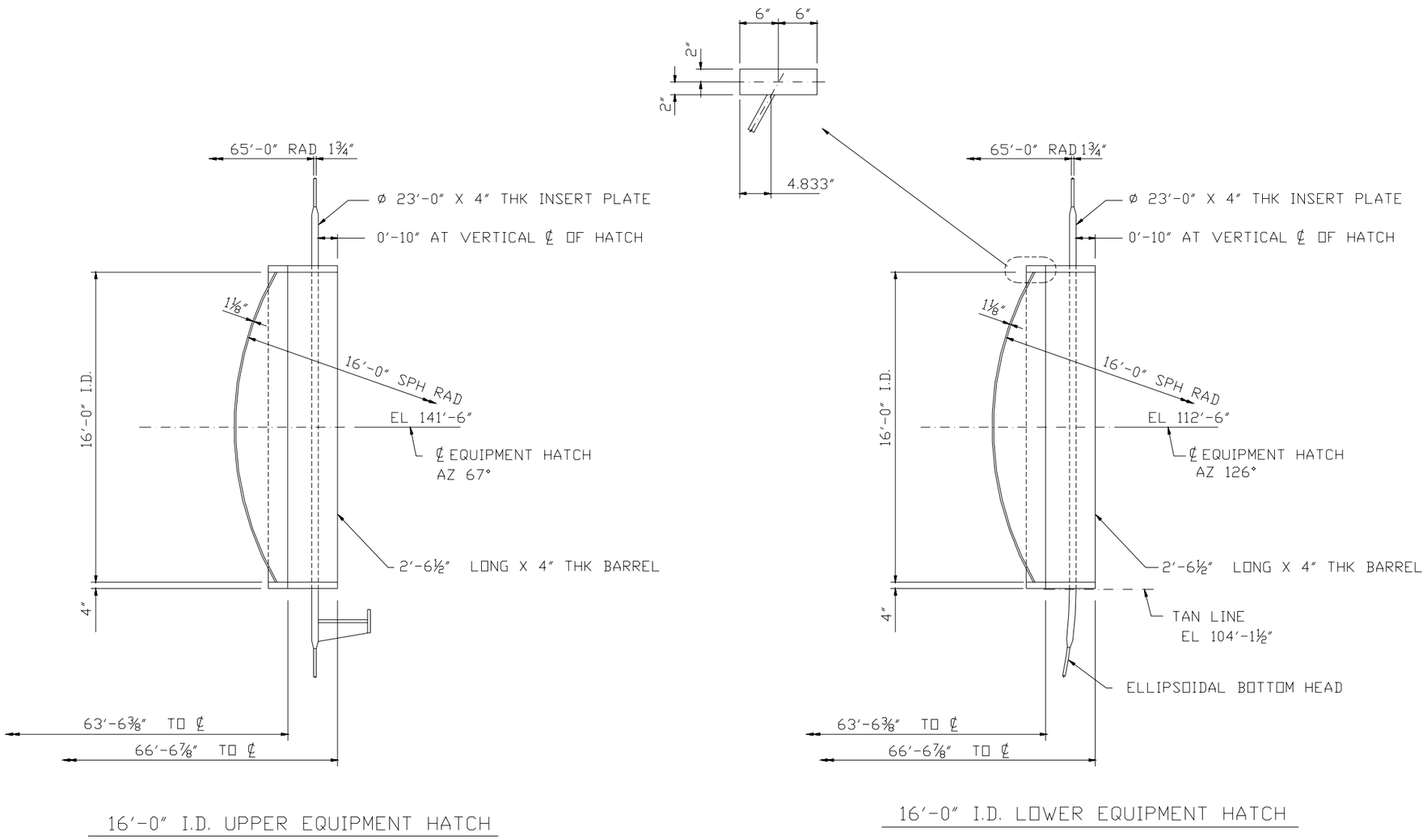

Figure 3.8.2-2

Equipment Hatches

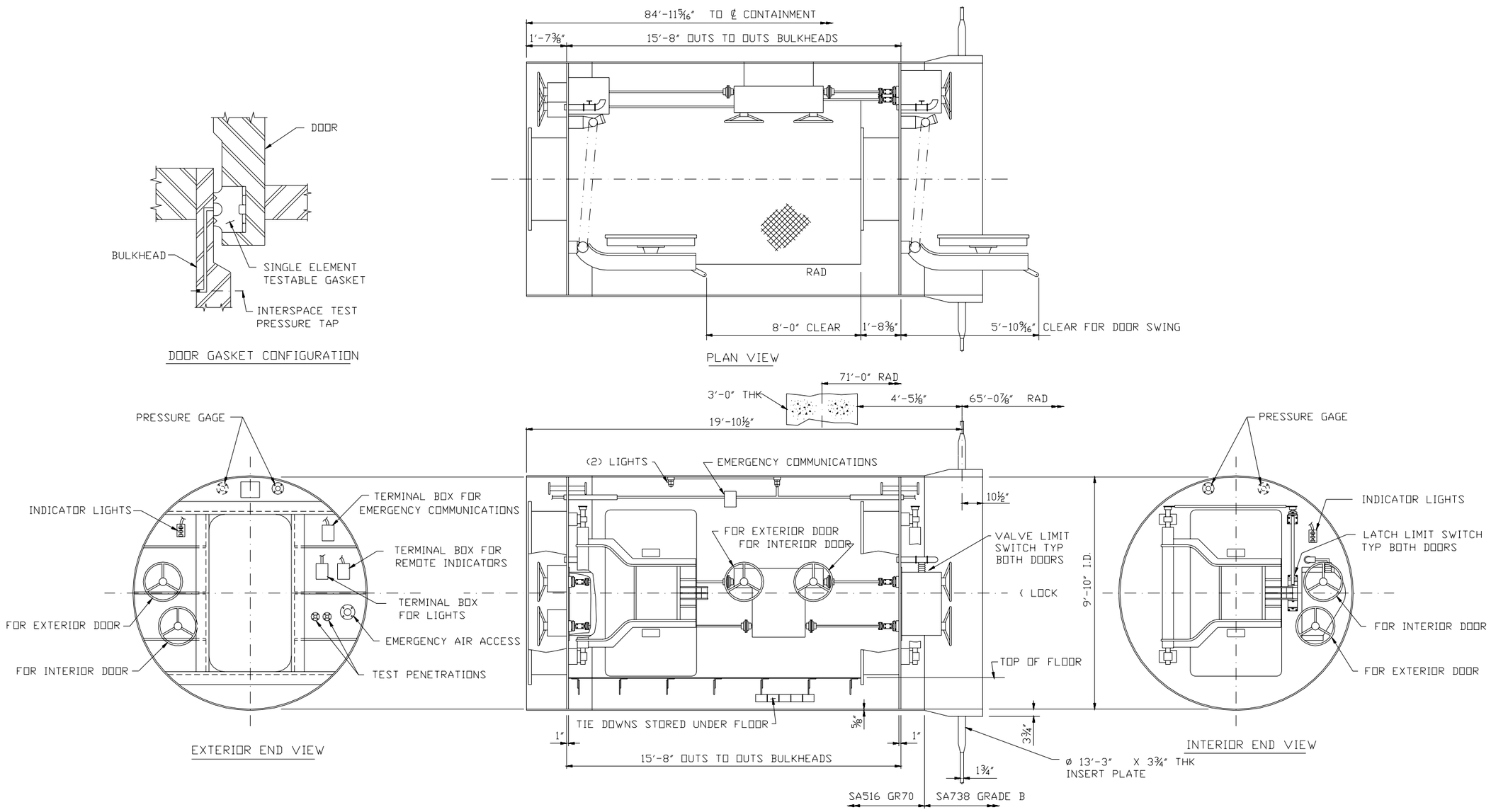

Figure 3.8.2-3

Personnel Airlock

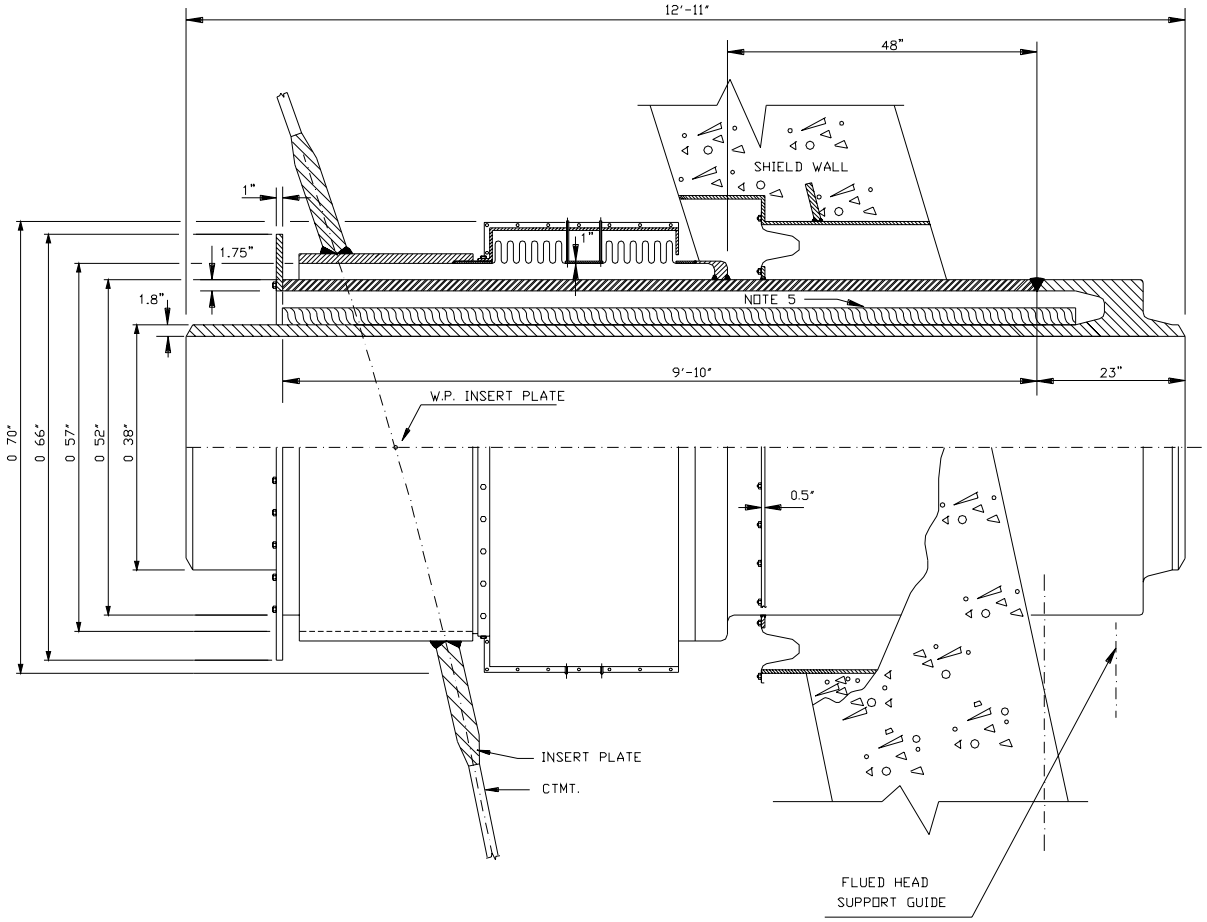

Figure 3.8.2-4 (Sheet 1 of 6)

Containment Penetrations Main Steam

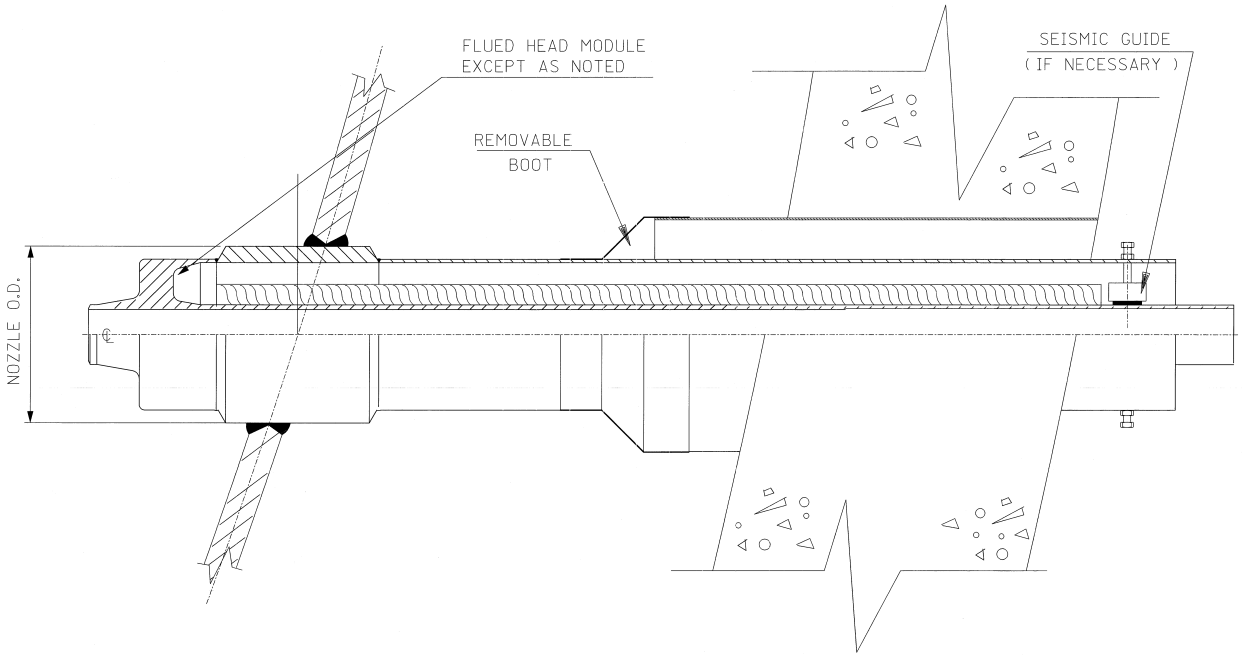

Figure 3.8.2-4 (Sheet 2 of 6)

Containment Penetrations Startup Feedwater

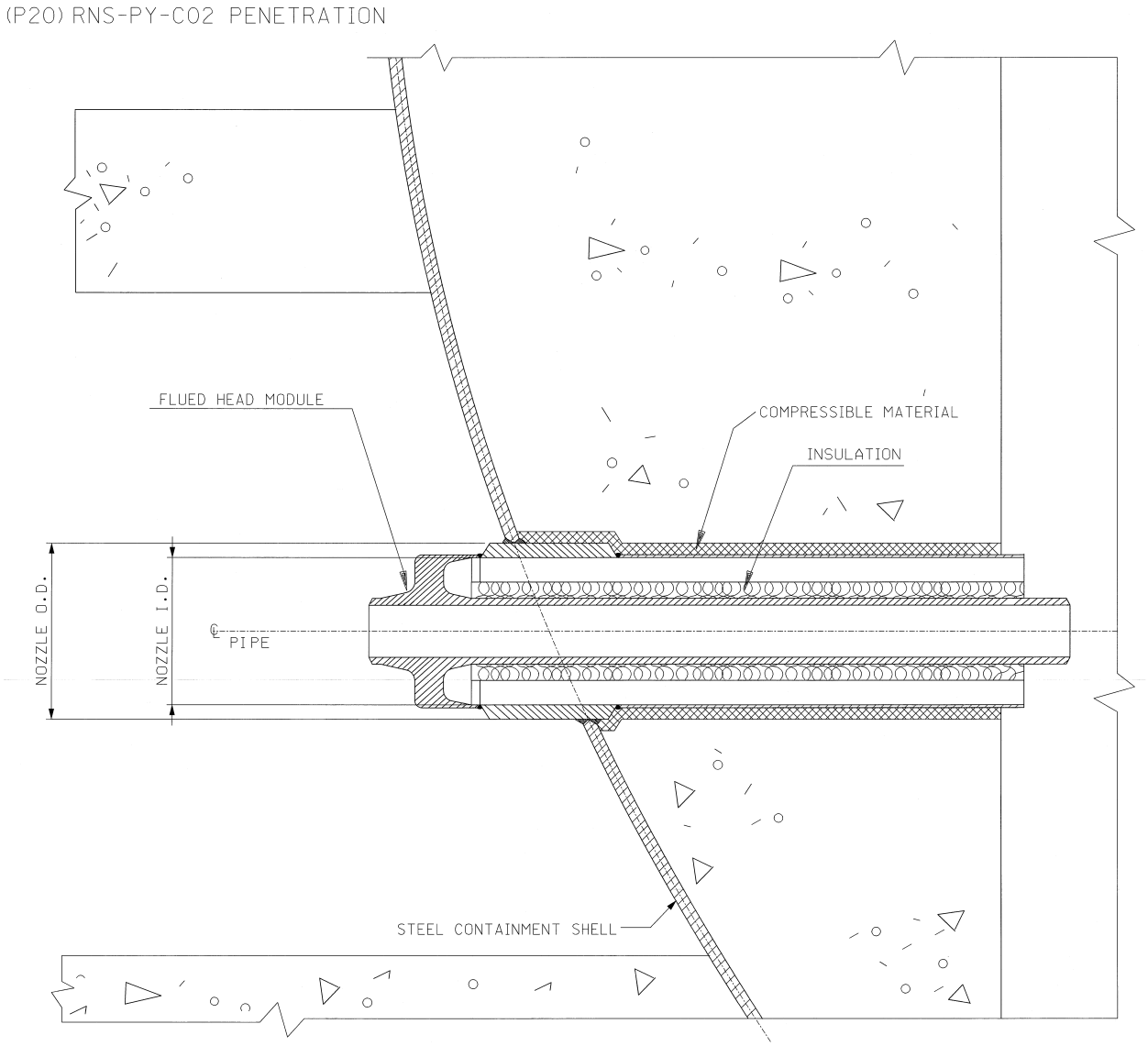

Figure 3.8.2-4 (Sheet 3 of 6)

Containment Penetrations Normal RHR Piping

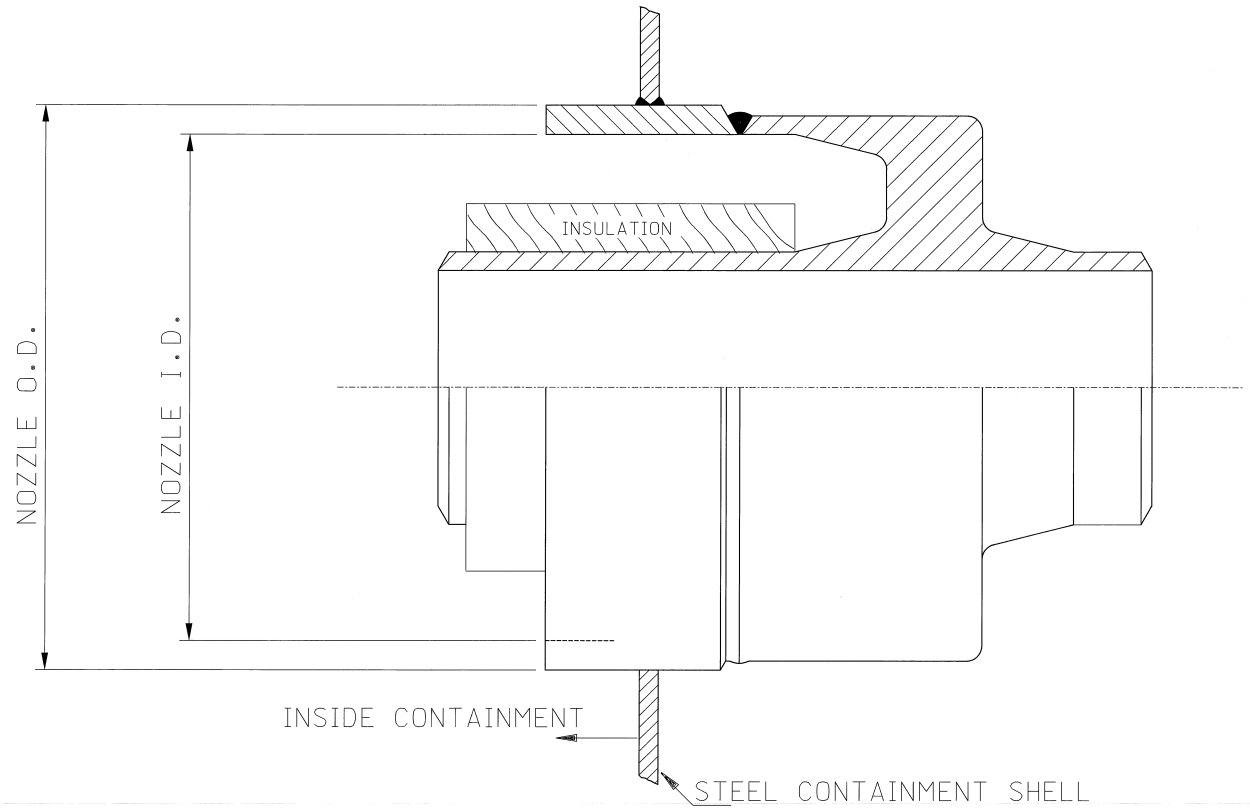

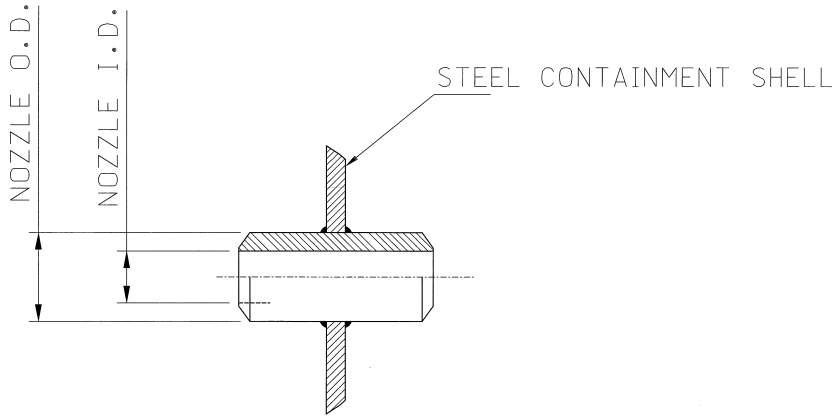

Figure 3.8.2-4 (Sheet 4 of 6)

Containment Penetrations

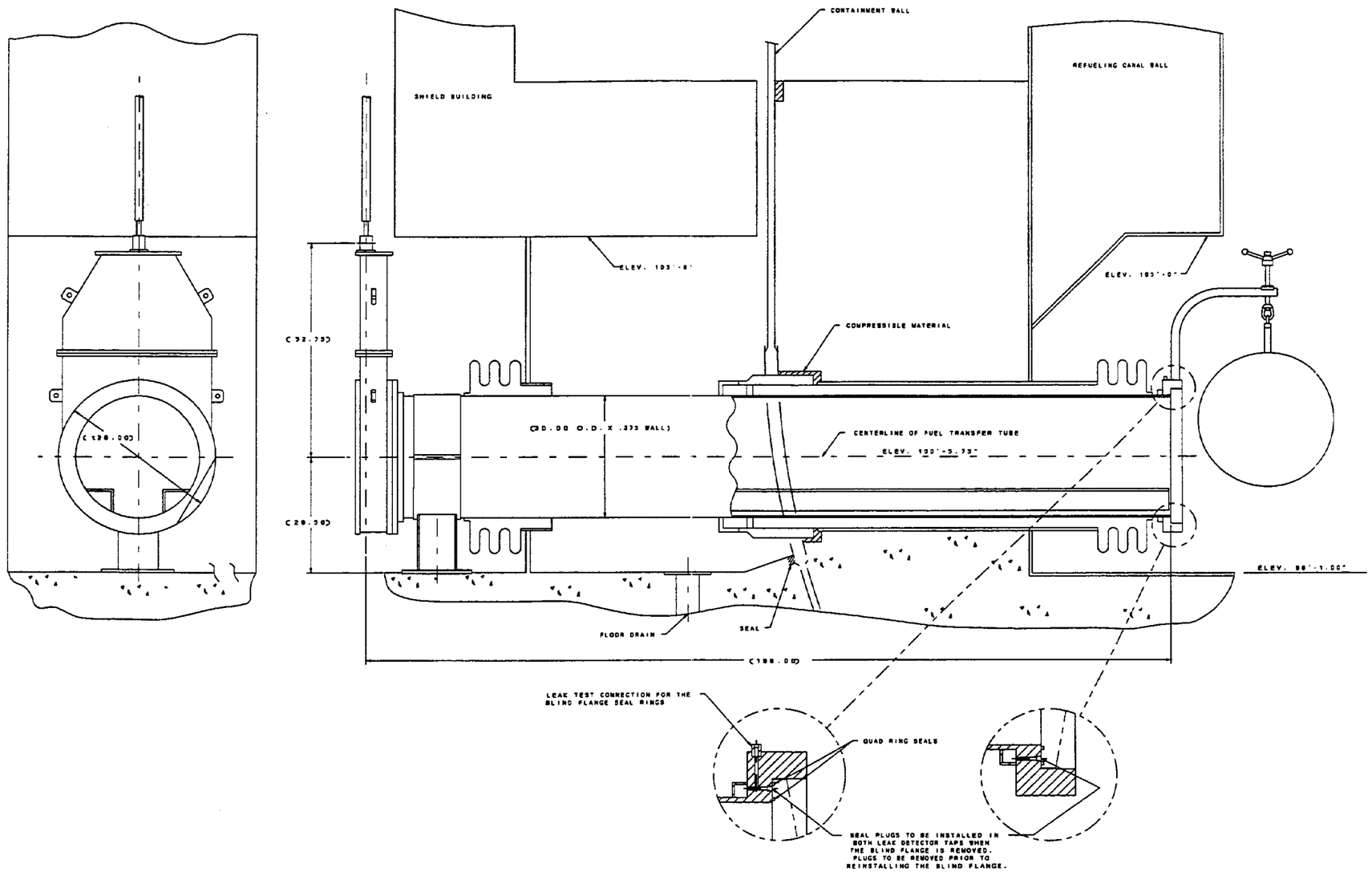

Figure 3.8.2-4 (Sheet 5 of 6)

Containment Penetrations
Fuel Transfer Penetration

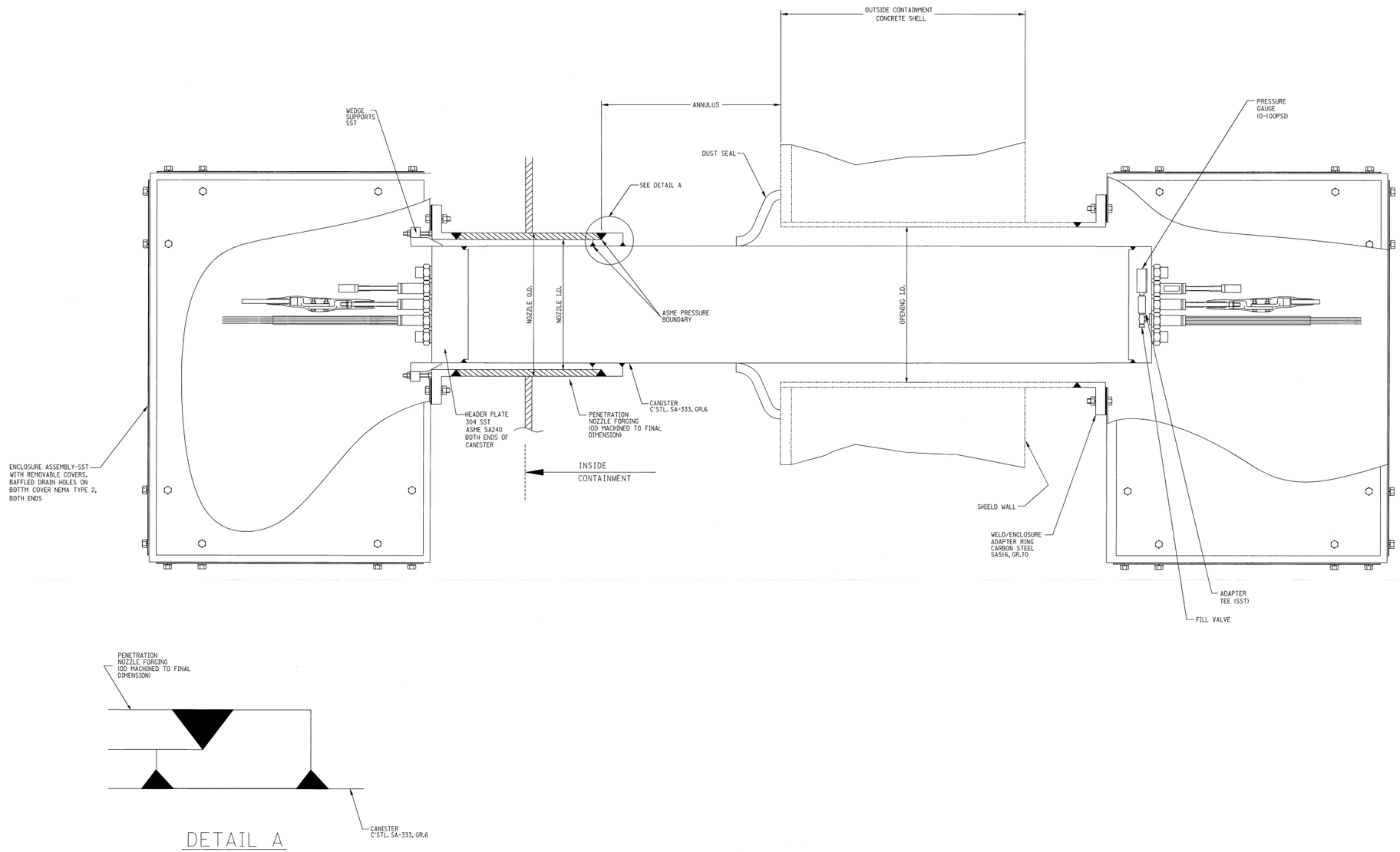

Figure 3.8.2-4 (Sheet 6 of 6)

Containment Penetrations
Typical Electrical Penetration

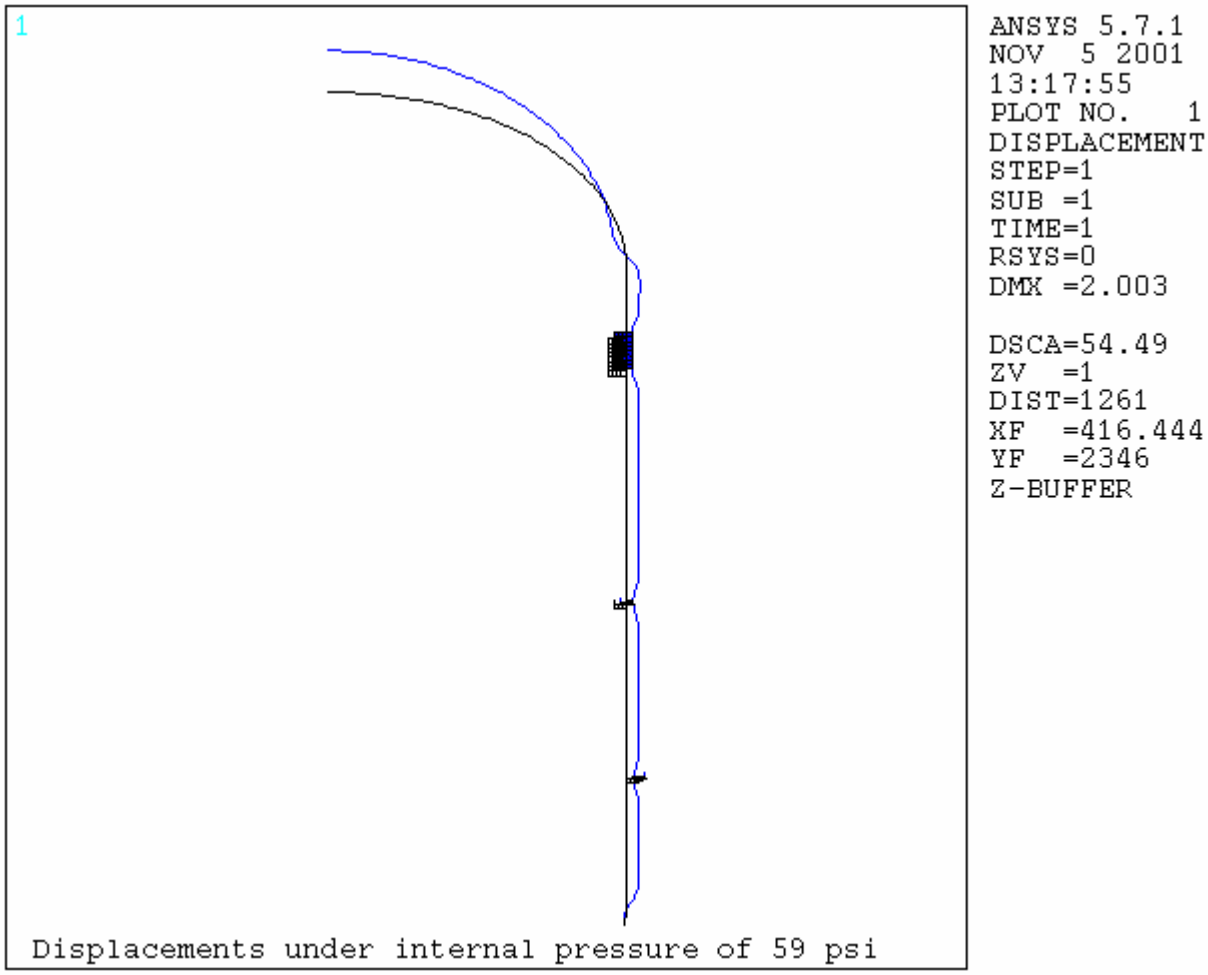

Figure 3.8.2-5 (Sheet 1 of 5)

Containment Vessel Response to Internal Pressure of 59 psig
Displaced Shape Plot

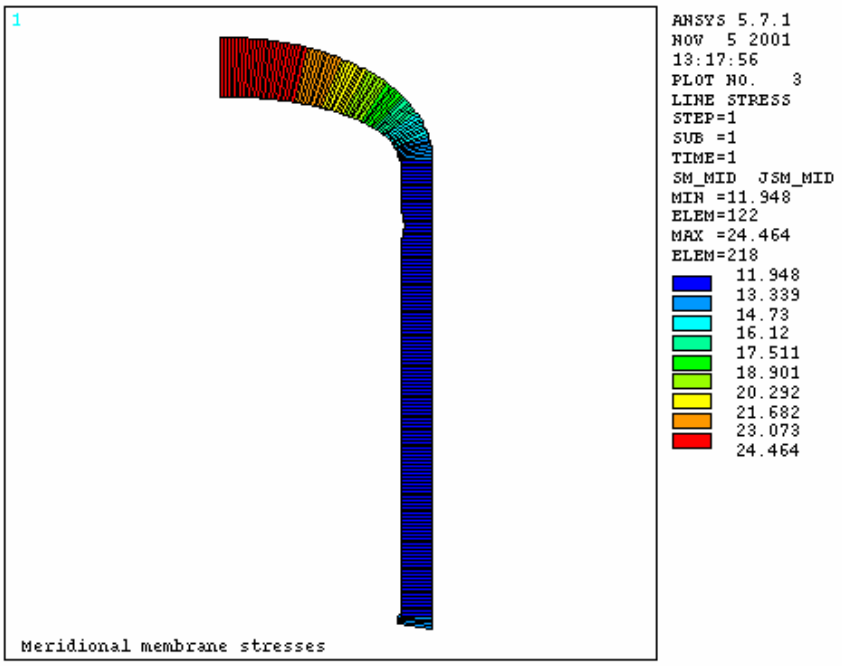

Meridional Membrane Stress (ksi)

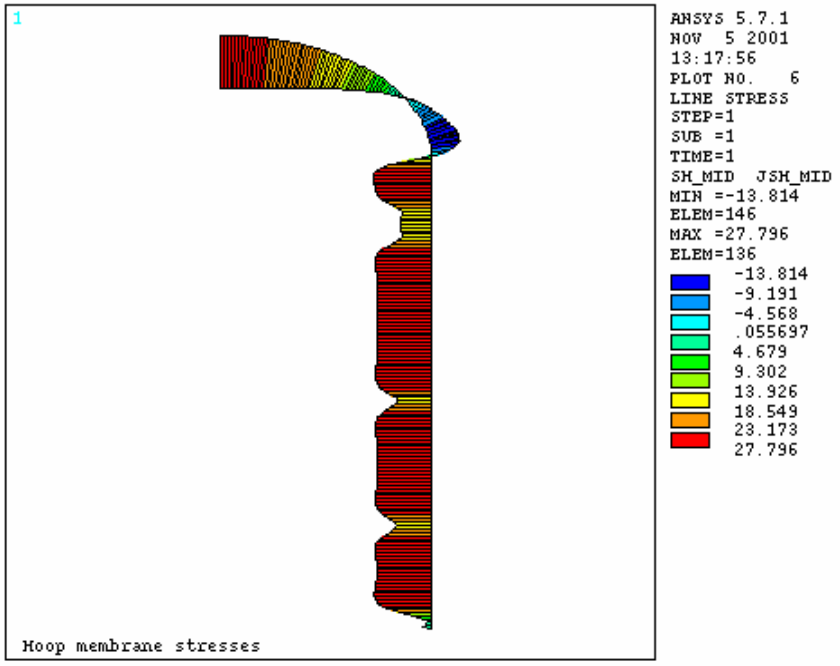

Circumferential Membrane Stress (ksi)

Figure 3.8.2-5 (Sheet 2 of 5)

Containment Vessel Response to Internal Pressure of 59 psig
Membrane Stresses (ksi)

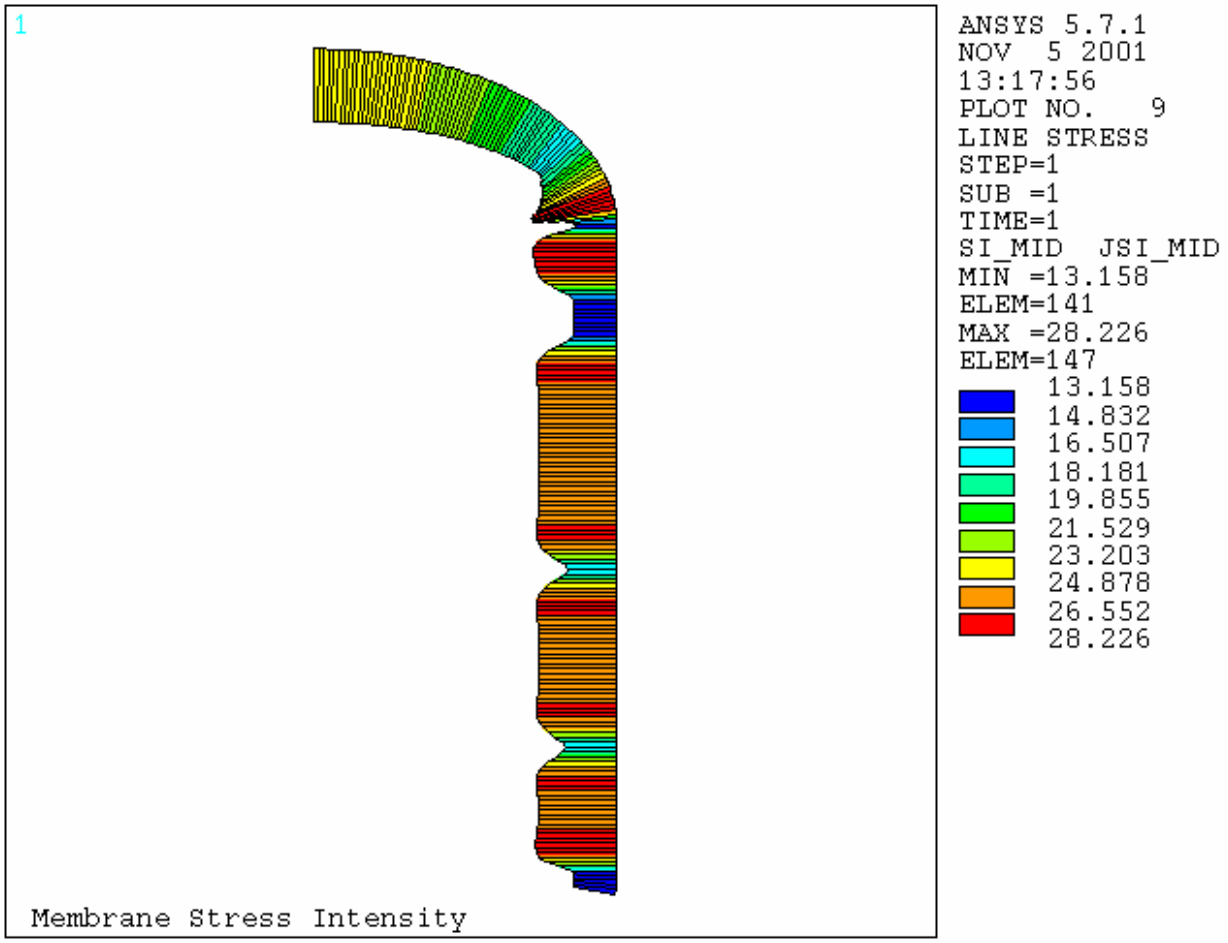

Figure 3.8.2-5 (Sheet 3 of 5)

Containment Vessel Response to Internal Pressure of 59 psig
Surface Meridional Stress (ksi)

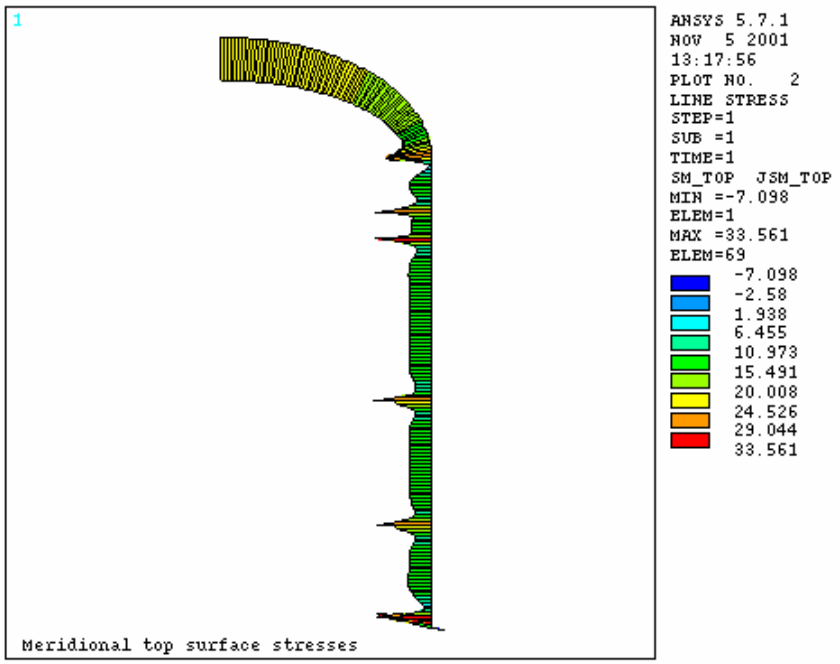

Meridional Top Surface Stress (ksi)

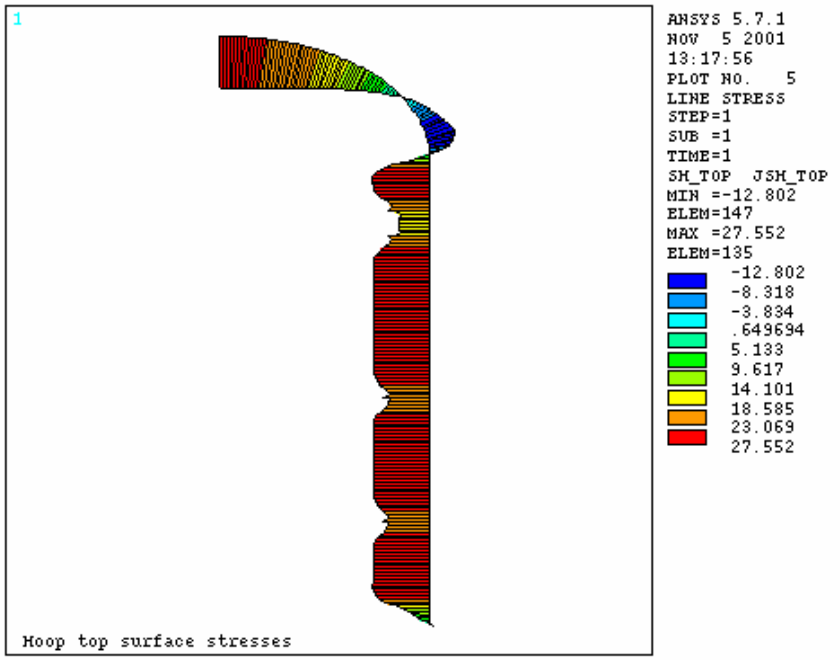

Circumferential Top Surface Stress (ksi)

Figure 3.8.2-5 (Sheet 4 of 5)

Containment Vessel Response to Internal Pressure of 59 psig
Outside Surface Stresses (ksi)

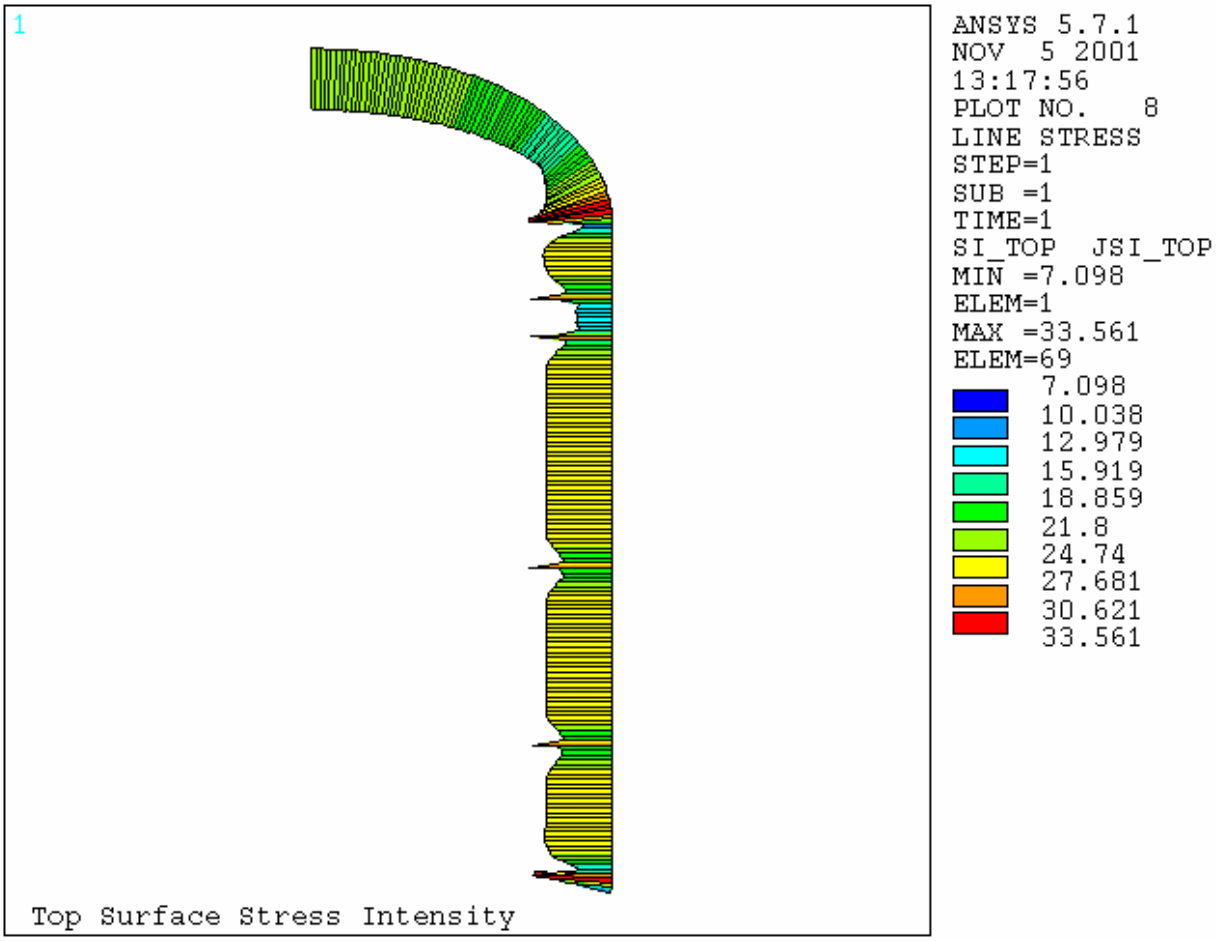

Figure 3.8.2-5 (Sheet 5 of 5)

Containment Vessel Response to Internal Pressure of 59 psig
Outer Stress Intensity (ksi)

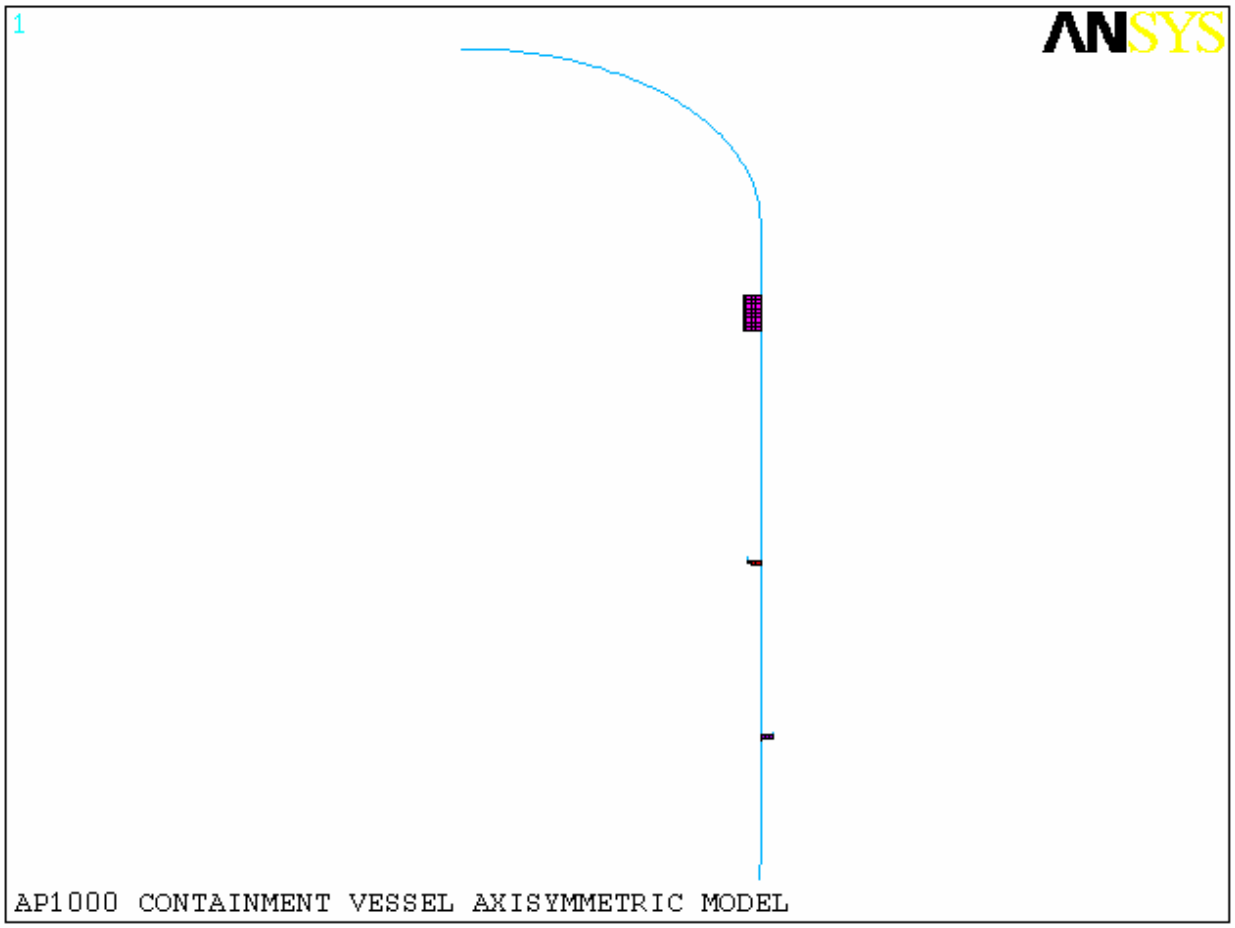

Figure 3.8.2-6 (Sheet 1 of 2)

Containment Vessel Axisymmetric Model

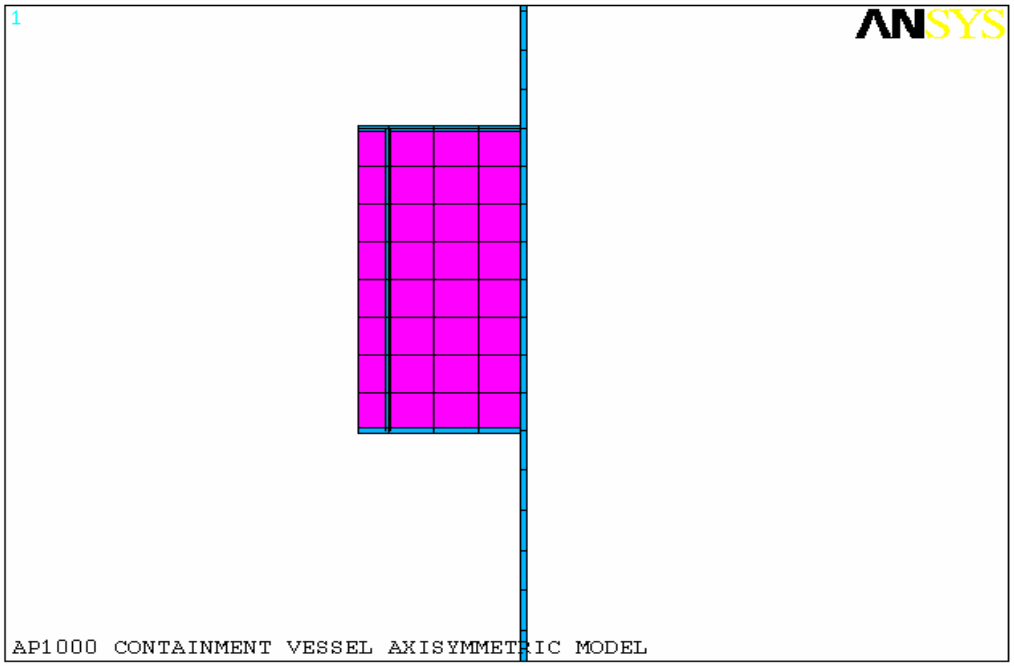

Crane Girder

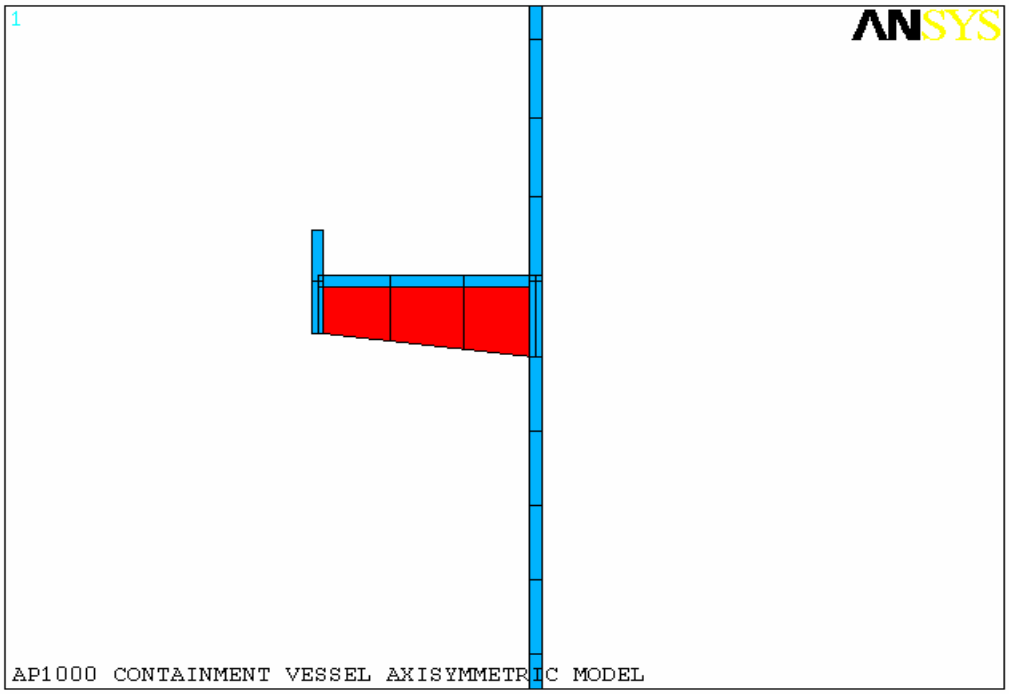

Internal Stiffener at Elev. 170′-0″

Figure 3.8.2-6 (Sheet 2 of 2)

Containment Vessel Axisymmetric Model

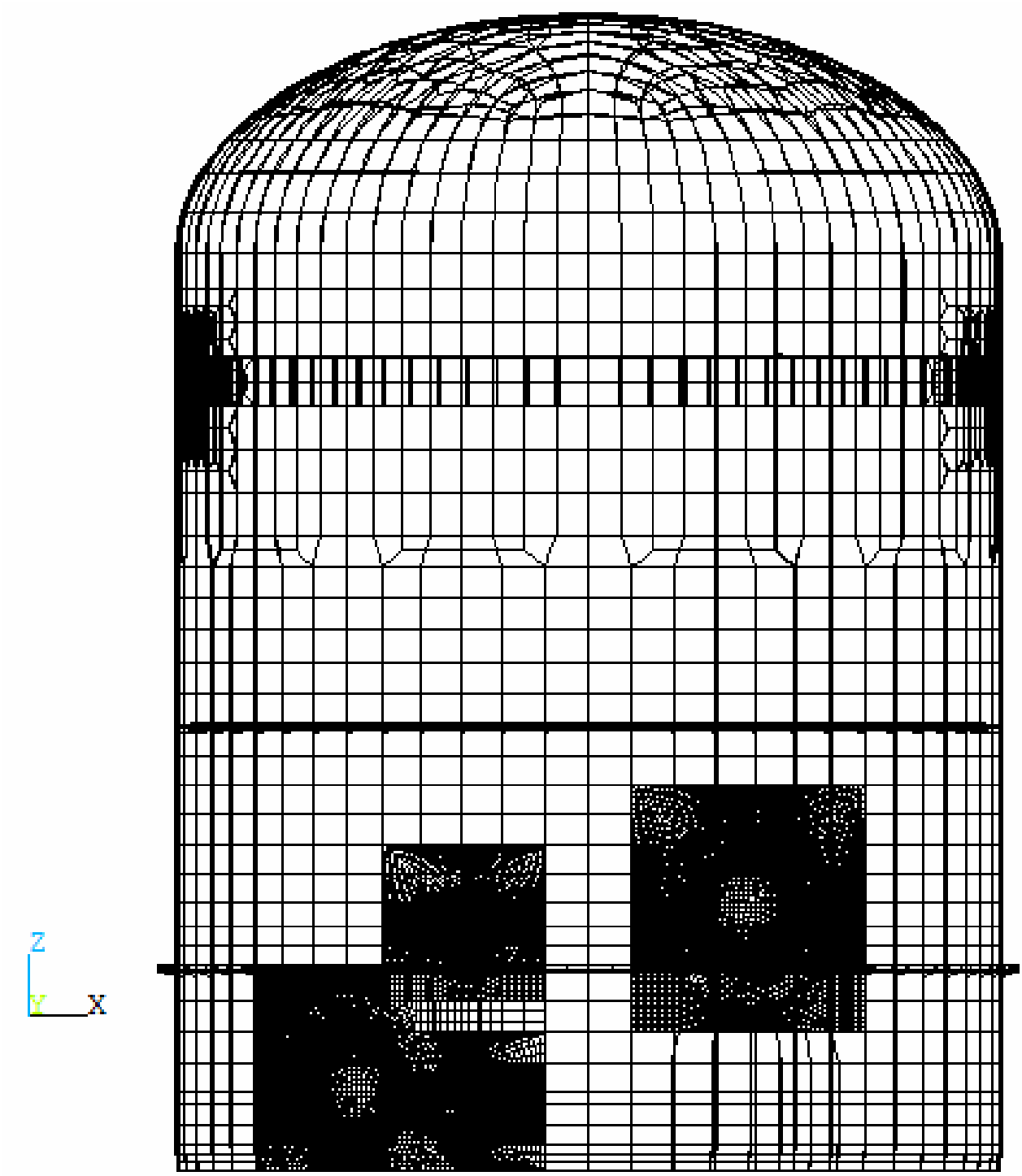

Figure 3.8.2-7

Finite Element Model for Local Buckling Analyses

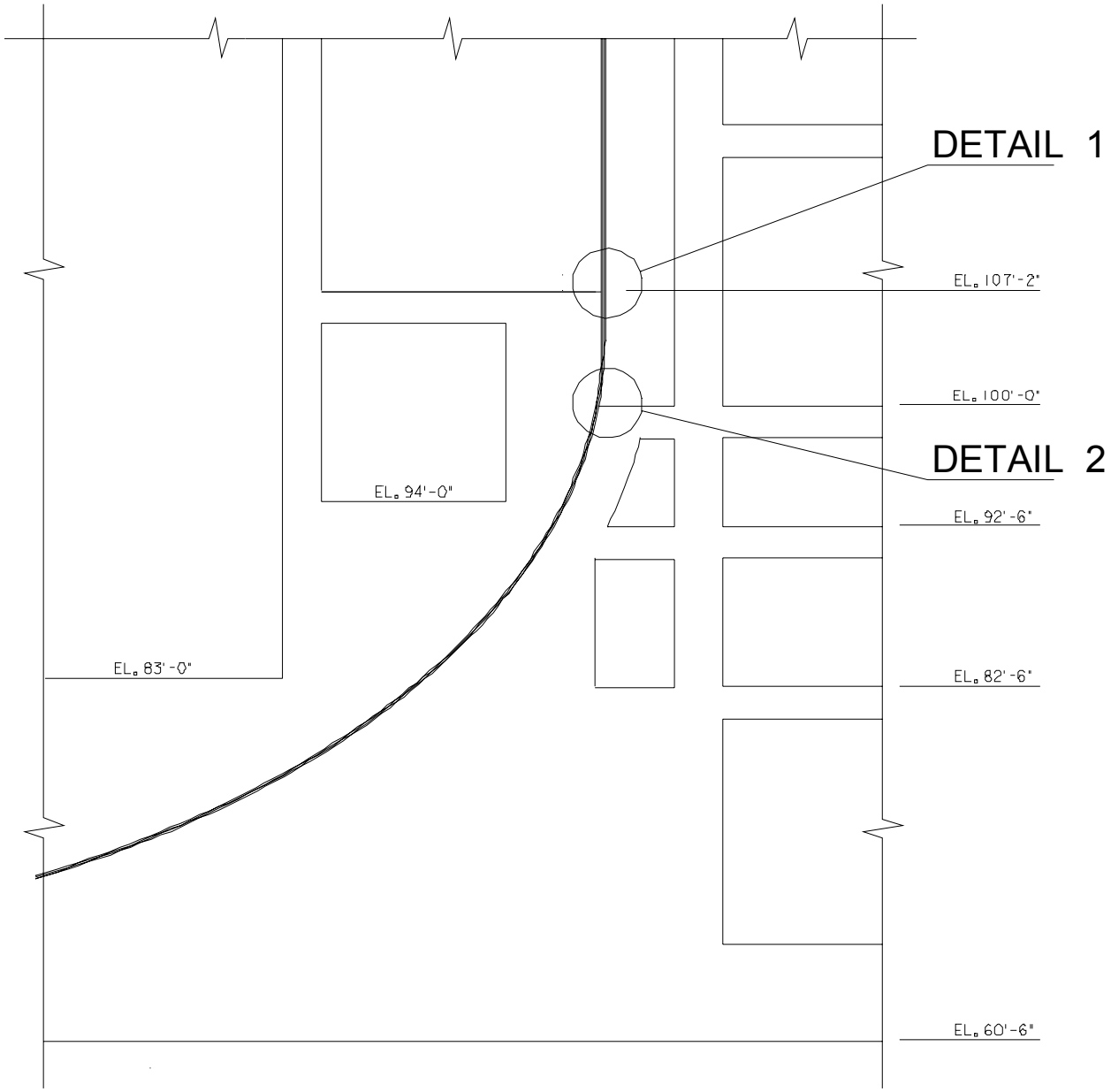

Figure 3.8.2-8 (Sheet 1 of 2)

Location of Containment Seal

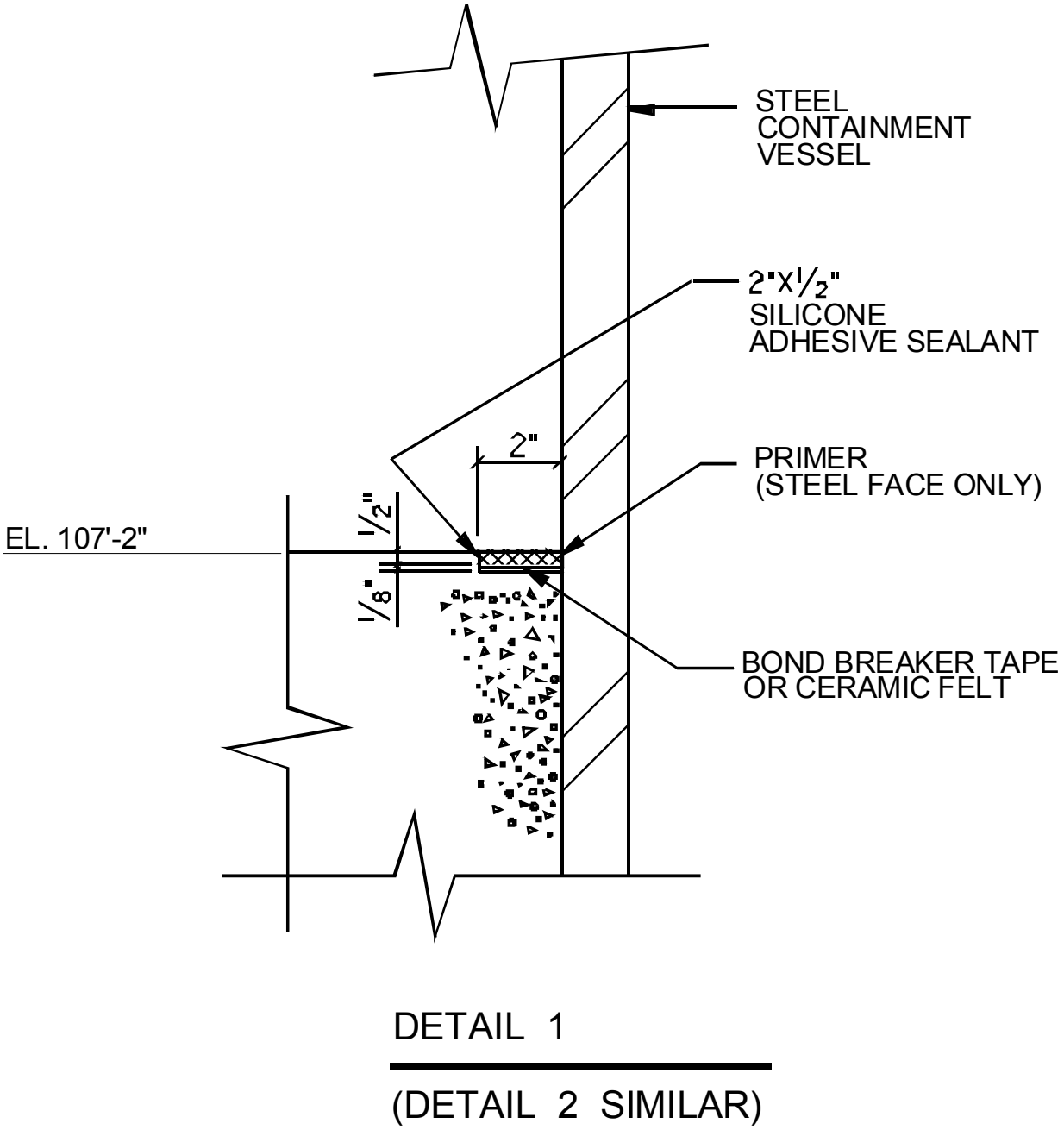

Figure 3.8.2-8 (Sheet 2 of 2)

Seal Sections and Details

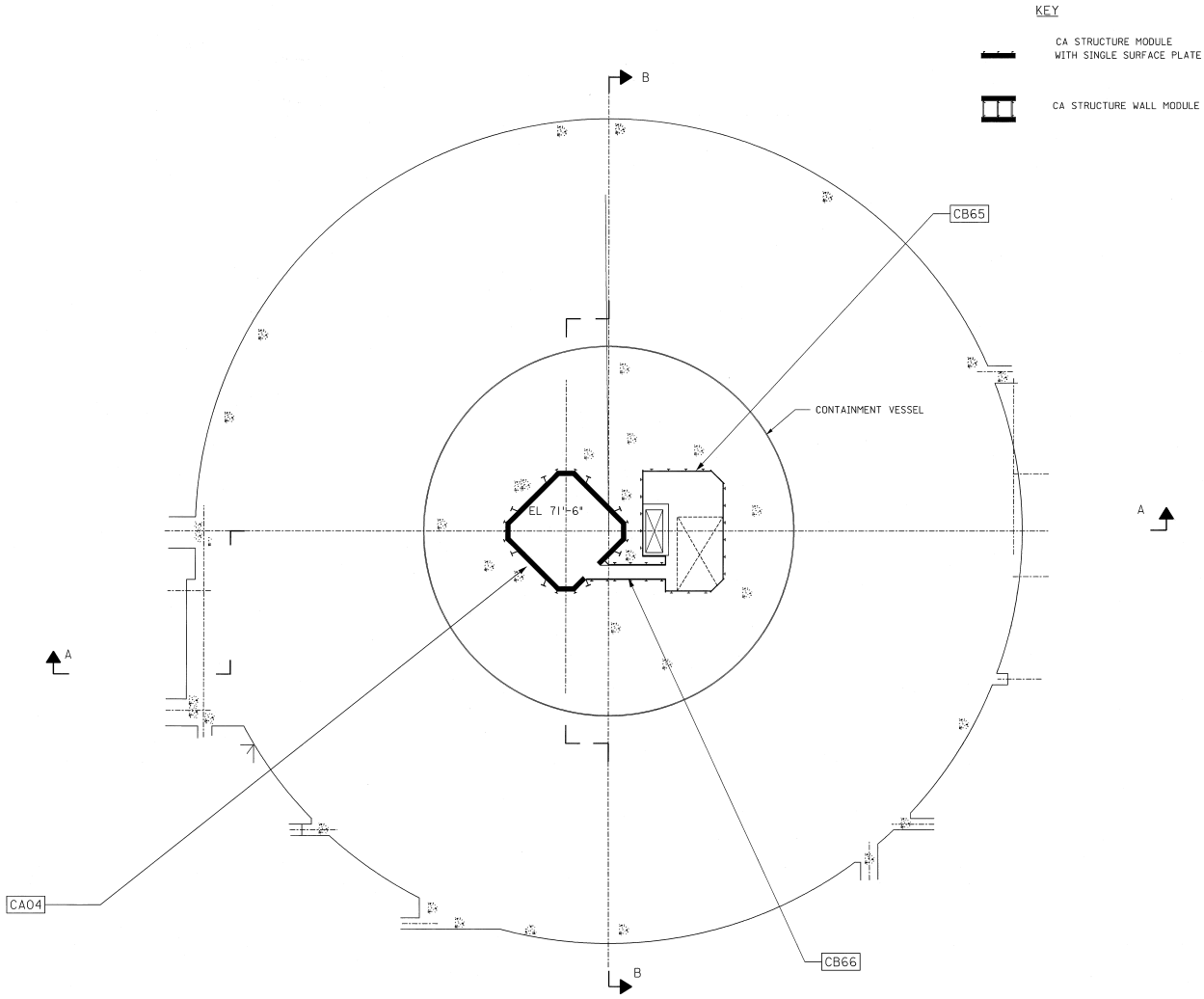

Figure 3.8.3-1 (Sheet 1 of 7)

[*Structural Modules in Containment Internal Structures*]*

*NRC Staff approval is required prior to implementing a change in this information; see DCD Introduction Section 3.5.

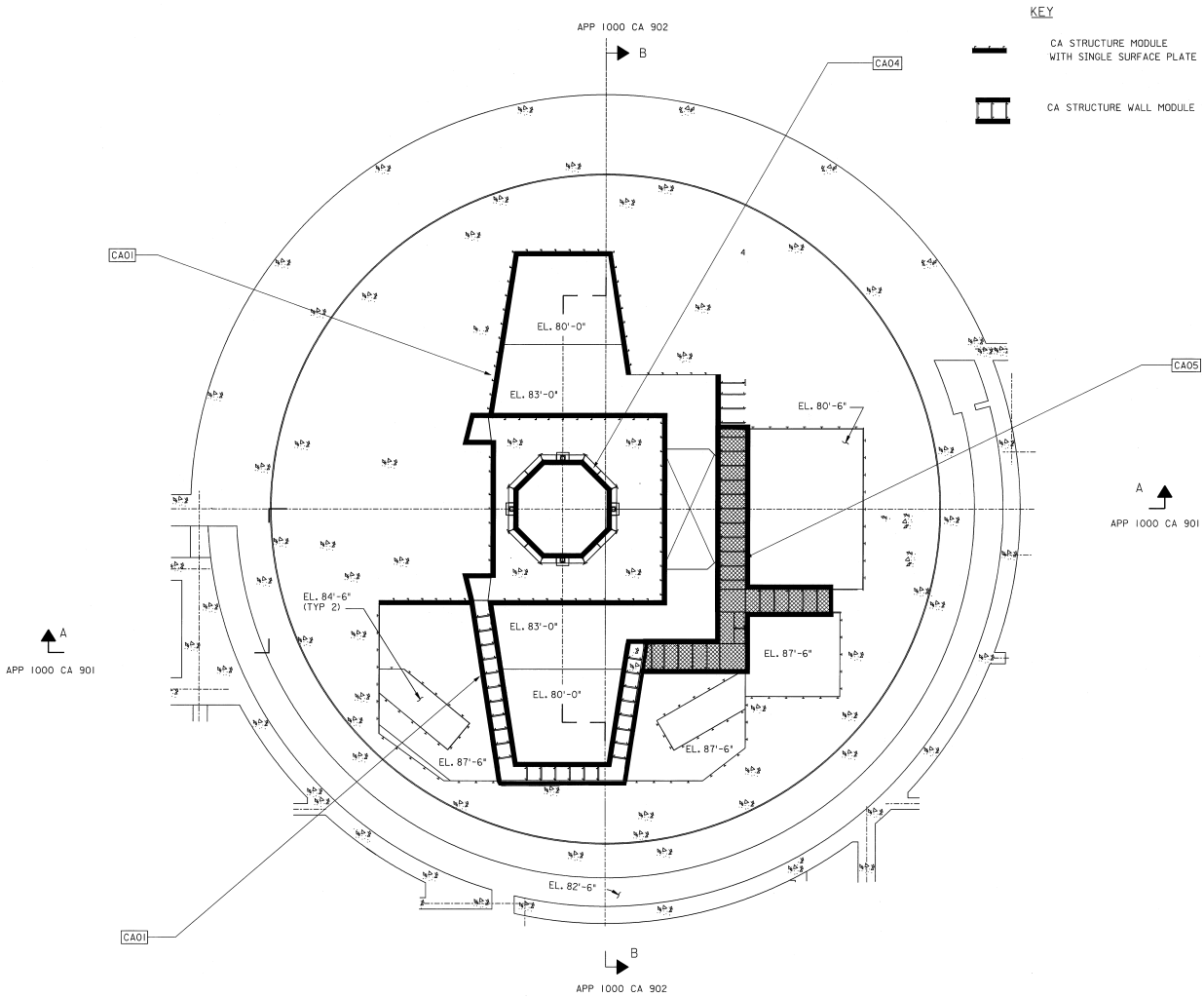

Figure 3.8.3-1 (Sheet 2 of 7)

[*Structural Modules in Containment Internal Structures*]*

*NRC Staff approval is required prior to implementing a change in this information; see DCD Introduction Section 3.5.

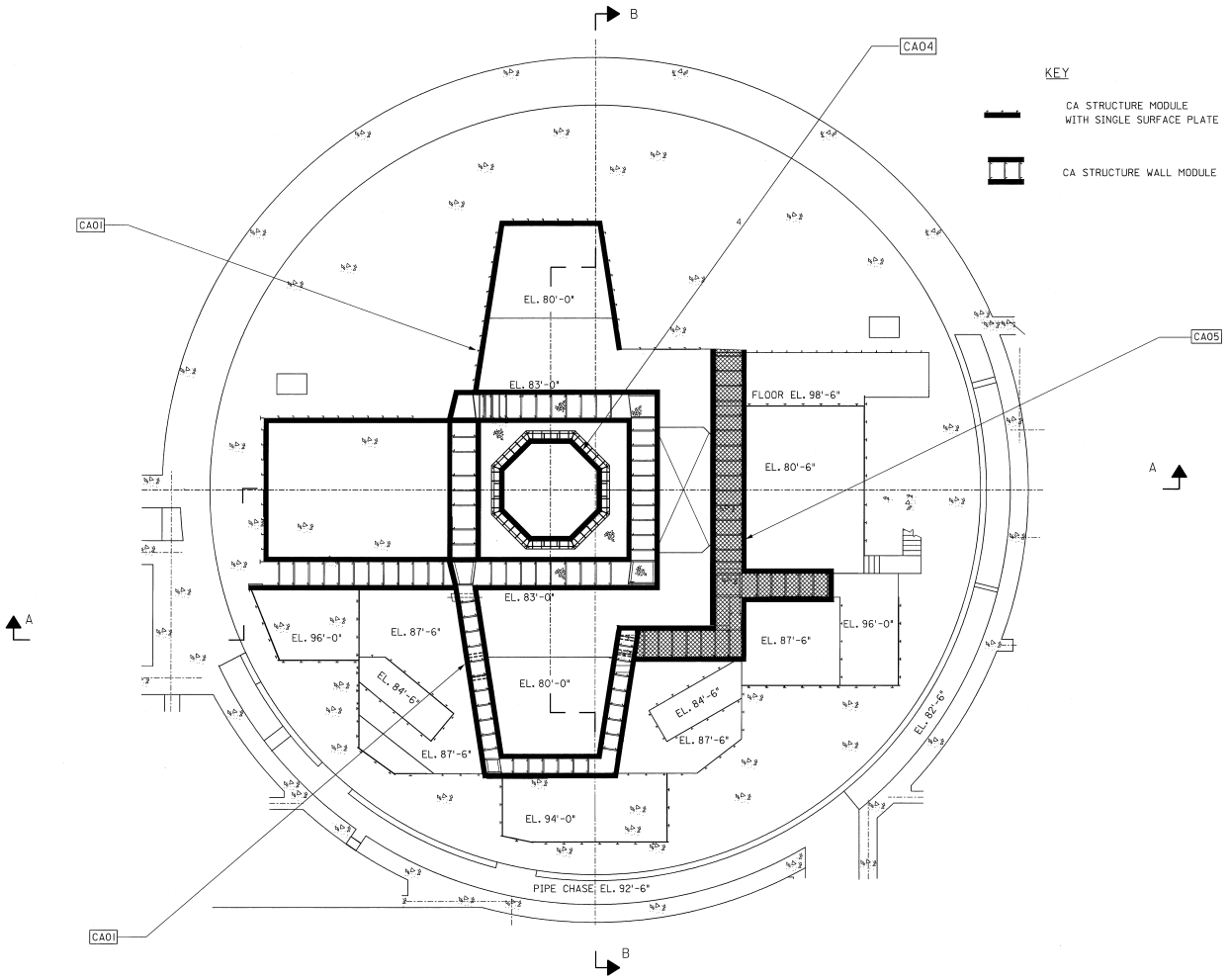

Figure 3.8.3-1 (Sheet 3 of 7)

[*Structural Modules in Containment Internal Structures*]*

*NRC Staff approval is required prior to implementing a change in this information; see DCD Introduction Section 3.5.

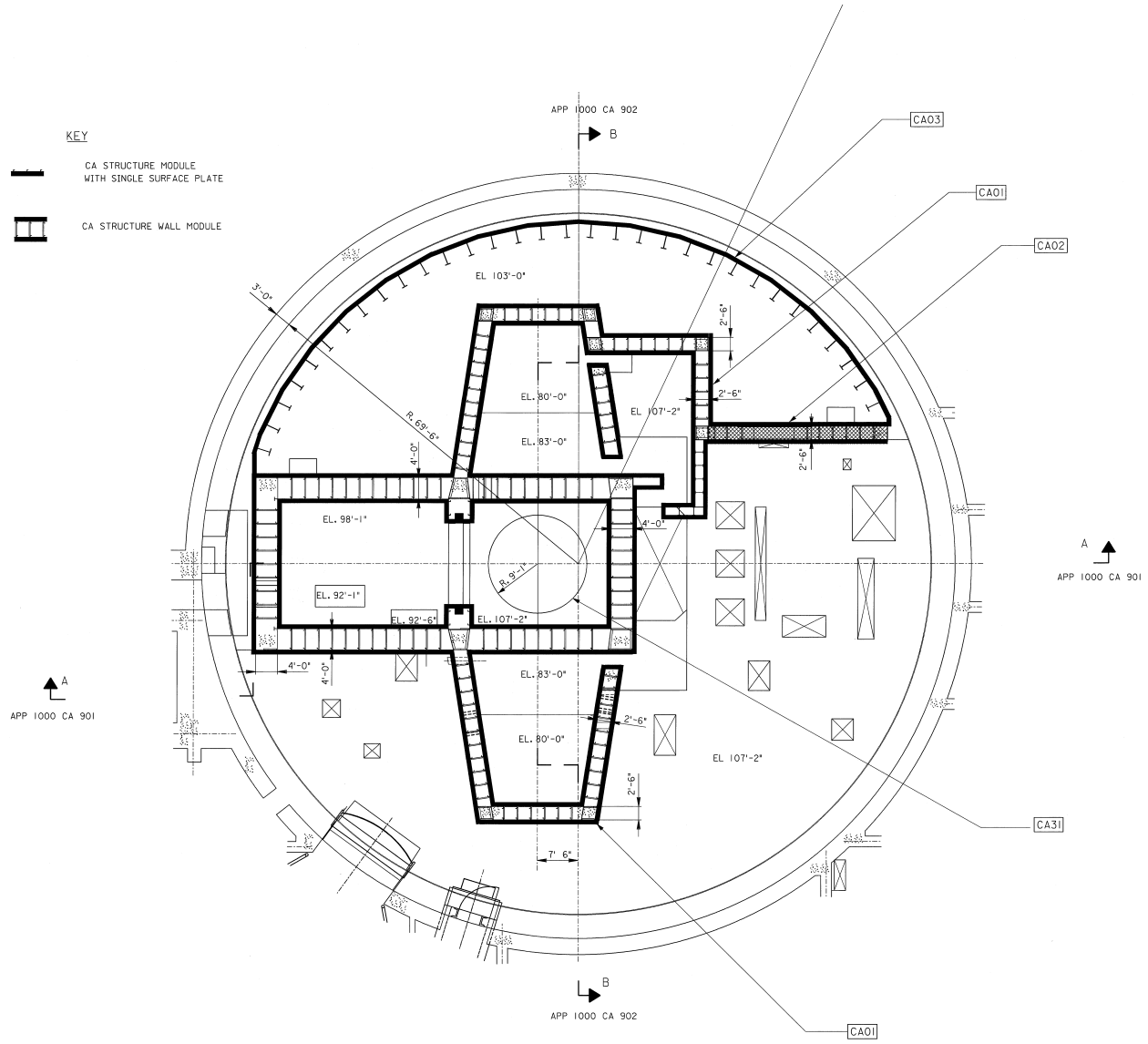

Figure 3.8.3-1 (Sheet 4 of 7)

[*Structural Modules in Containment Internal Structures*]*

*NRC Staff approval is required prior to implementing a change in this information; see DCD Introduction Section 3.5.

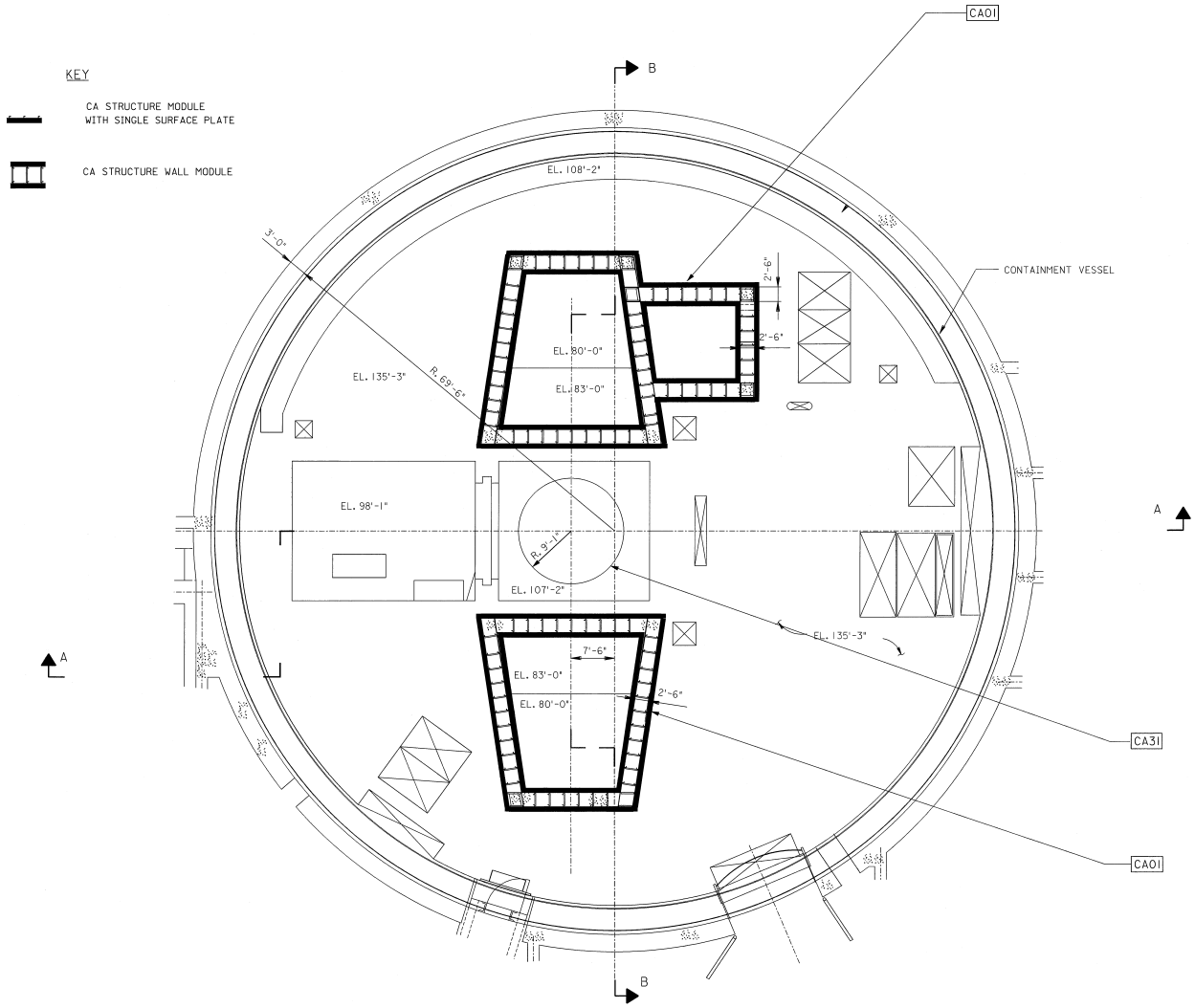

Figure 3.8.3-1 (Sheet 5 of 7)

[*Structural Modules in Containment Internal Structures*]*

*NRC Staff approval is required prior to implementing a change in this information; see DCD Introduction Section 3.5.

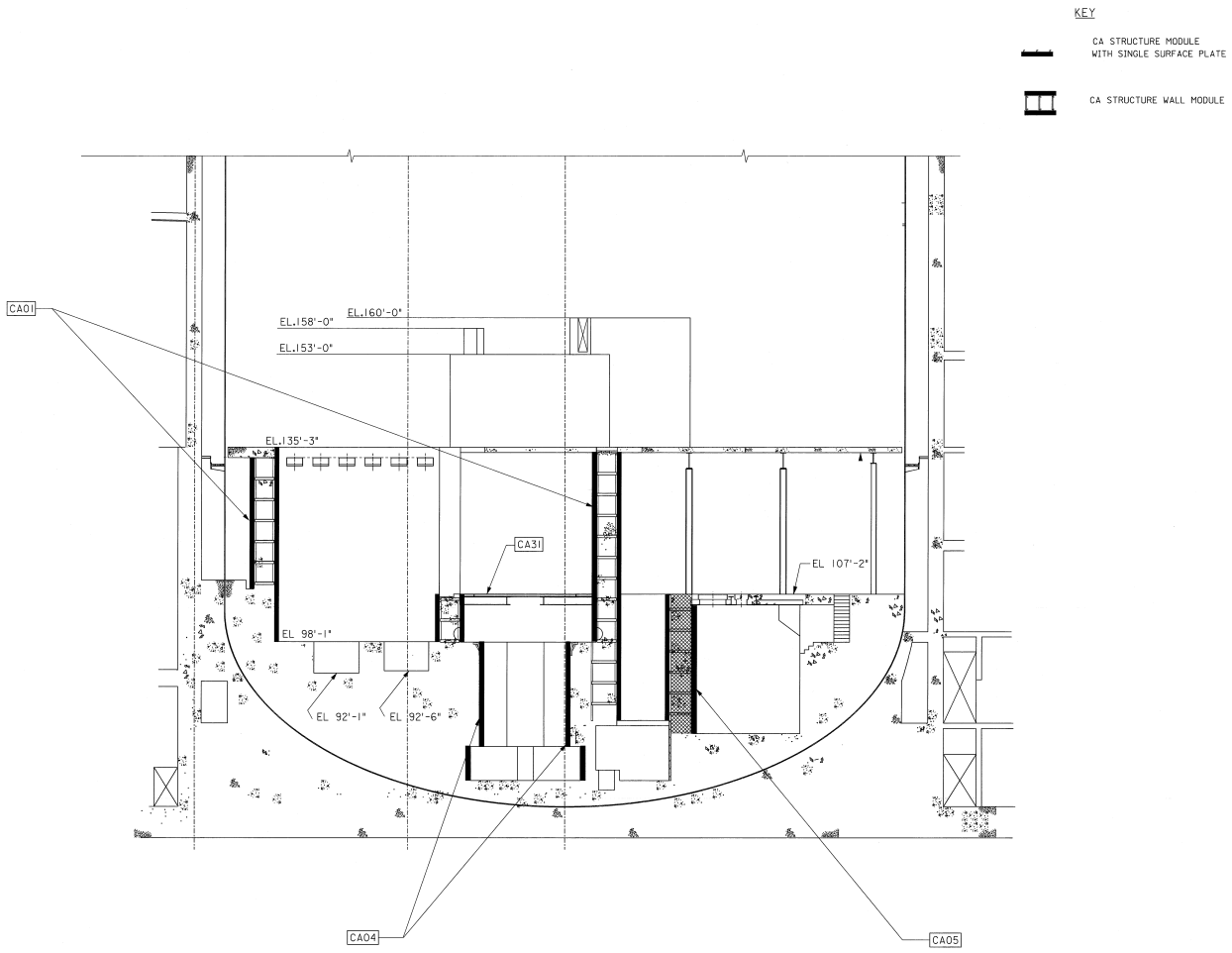

Figure 3.8.3-1 (Sheet 6 of 7)

[*Structural Modules in Containment Internal Structures*]*

*NRC Staff approval is required prior to implementing a change in this information; see DCD Introduction Section 3.5.

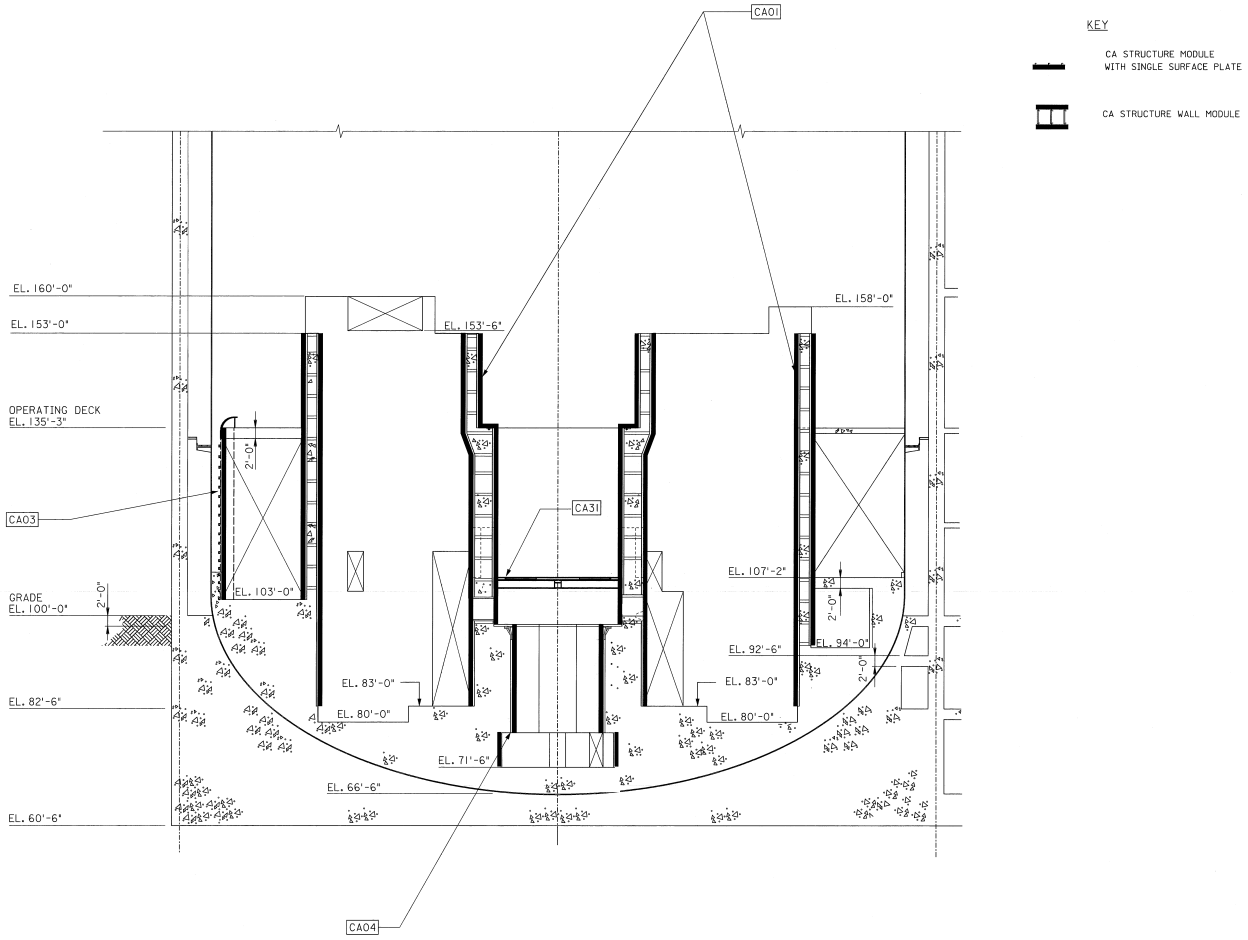

Figure 3.8.3-1 (Sheet 7 of 7)

[*Structural Modules in Containment Internal Structures*]*

*NRC Staff approval is required prior to implementing a change in this information; see DCD Introduction Section 3.5.

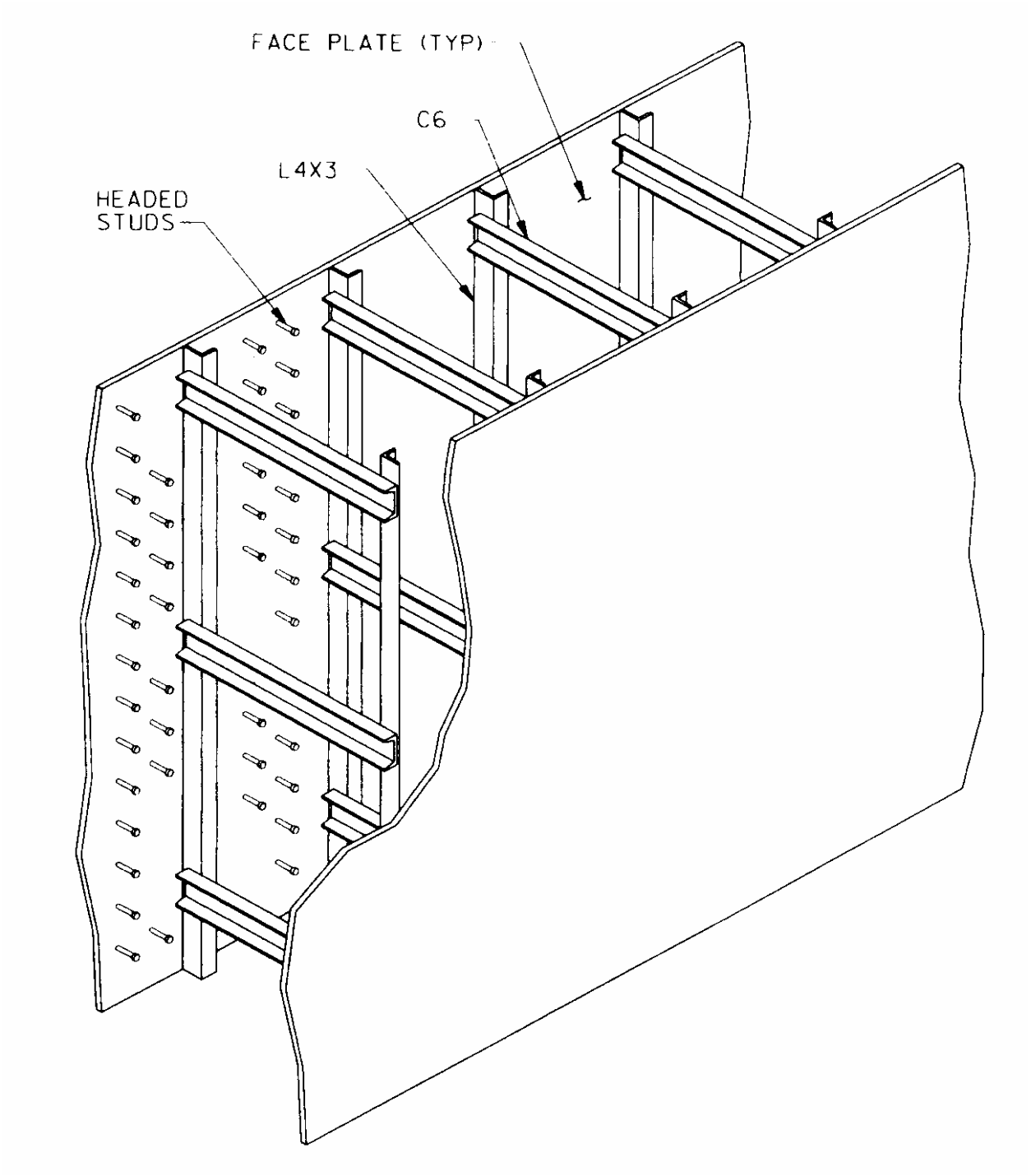

Figure 3.8.3-2

[*Typical Structural Wall Module*]*

*NRC Staff approval is required prior to implementing a change in this information; see DCD Introduction Section 3.5.

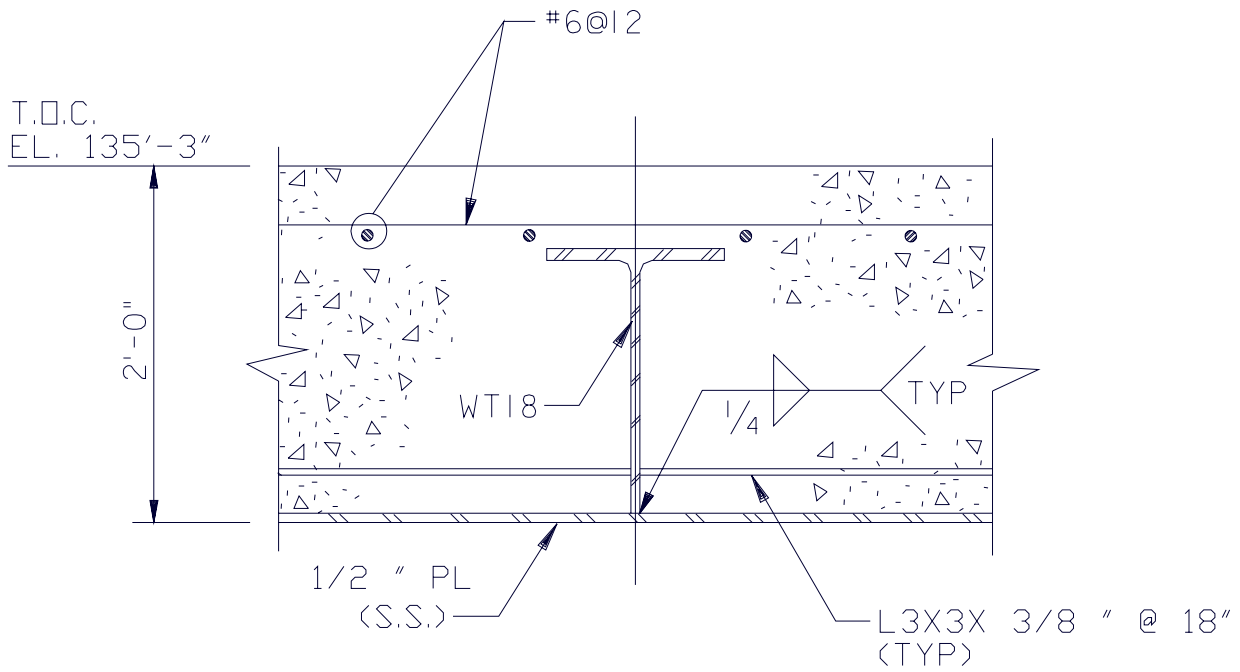

Figure 3.8.3-3

Typical Structural Floor Module

[This page intentionally blank]

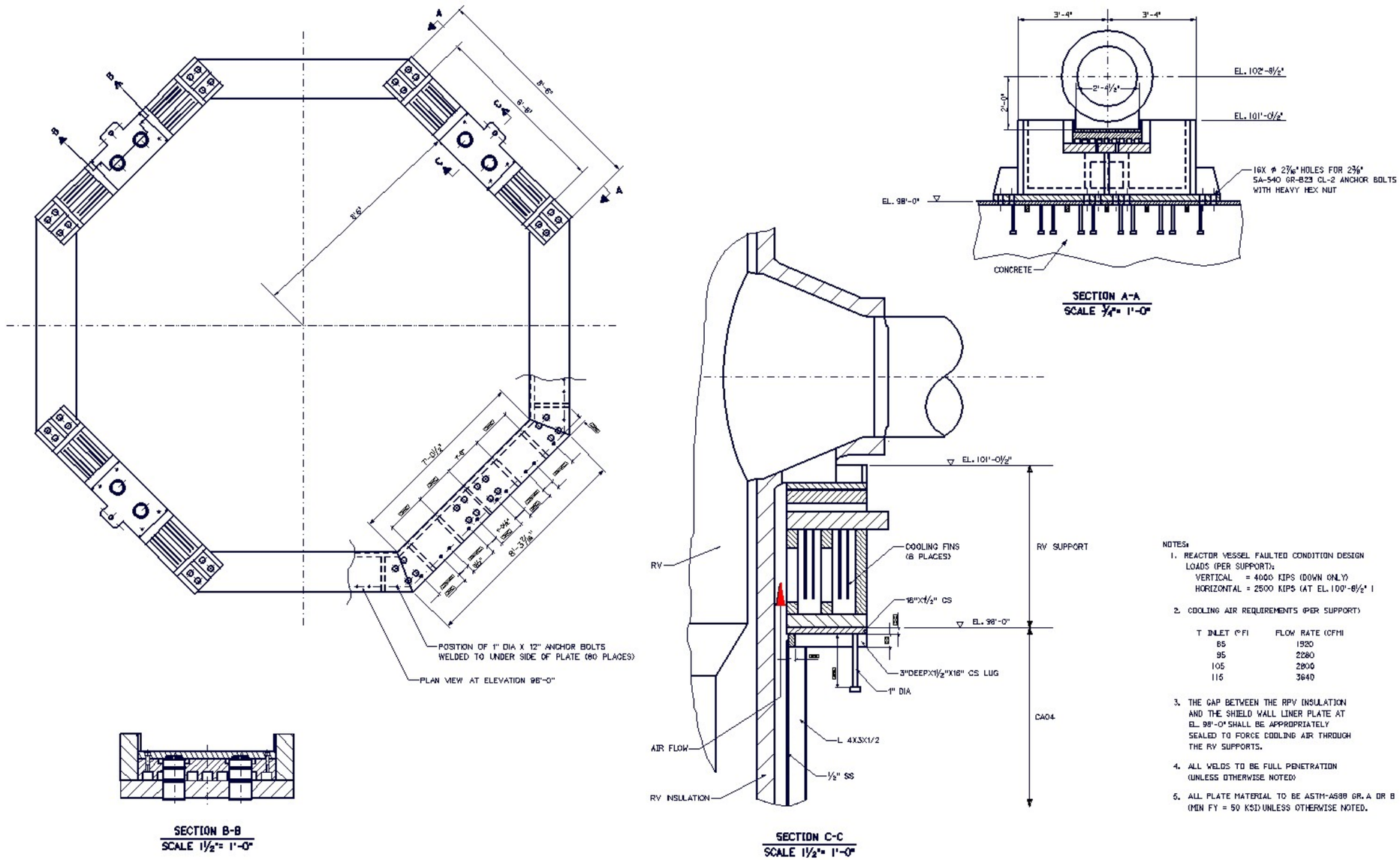

Figure 3.8.3-4

Reactor Vessel Supports

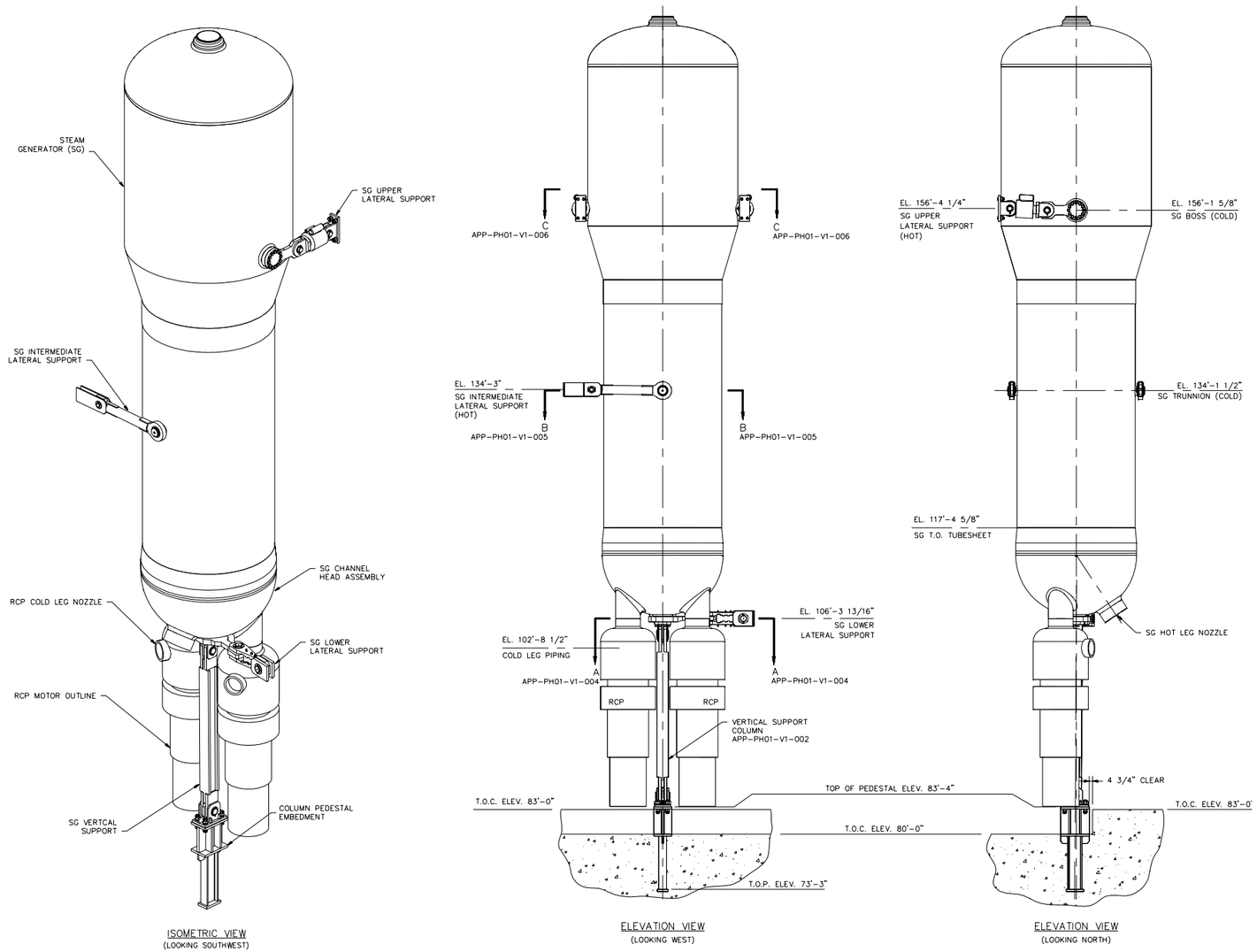

SG Support Assembly

Figure 3.8.3-5 (Sheet 1 of 5)

Steam Generator Supports

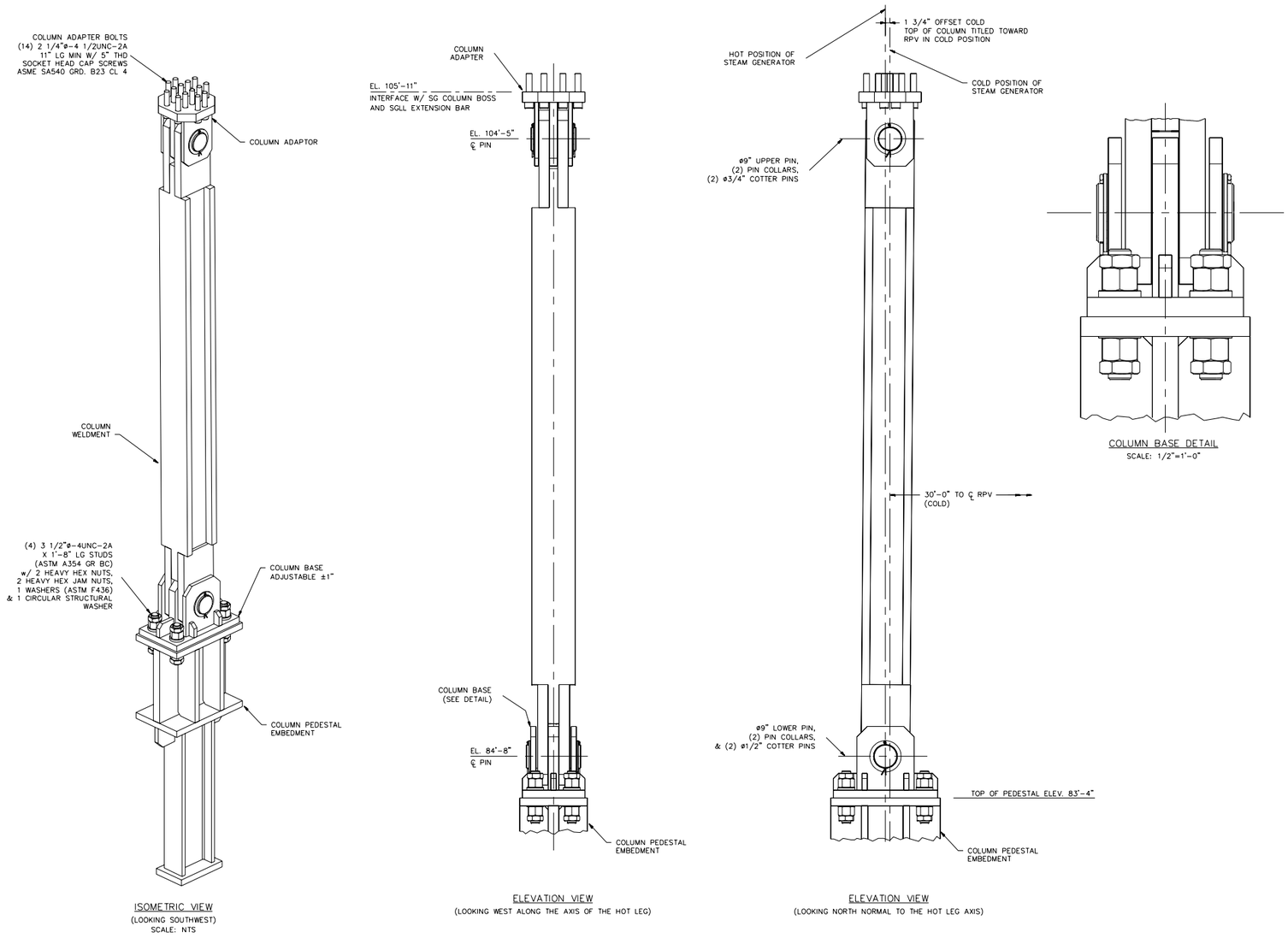

SG Vertical Support Column

Figure 3.8.3-5 (Sheet 2 of 5)

Steam Generator Supports

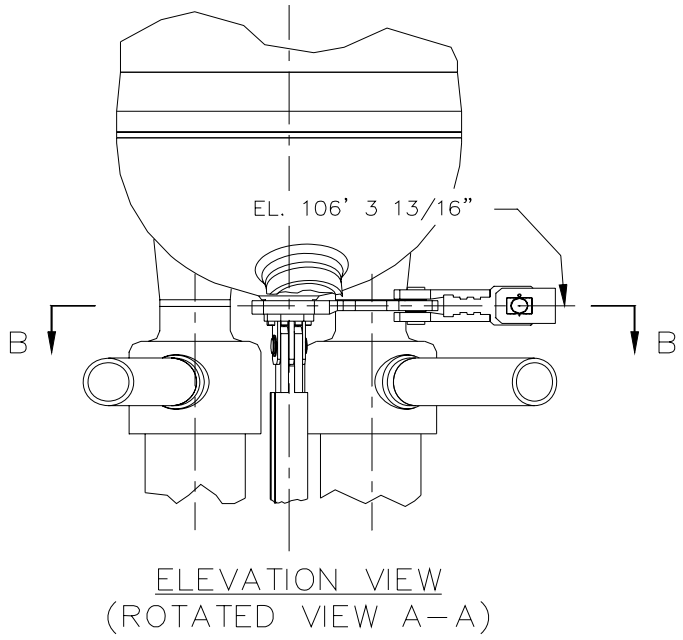

Lower Lateral Support Elevation View

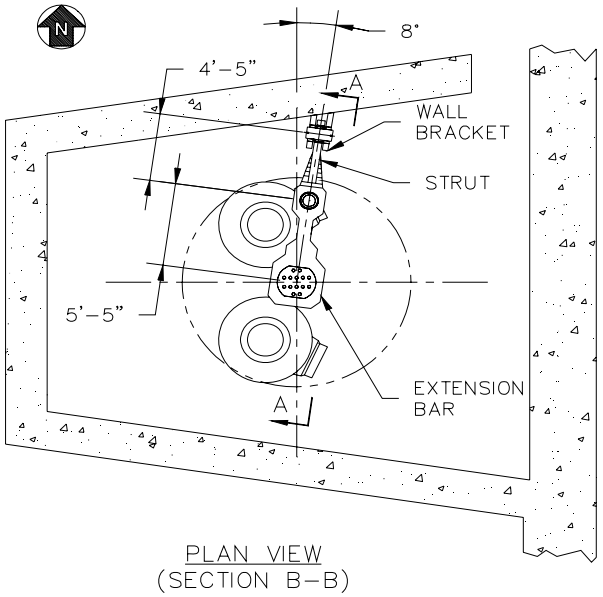

Lower Lateral Support Plan View

Figure 3.8.3-5 (Sheet 3 of 5)

Steam Generator Supports

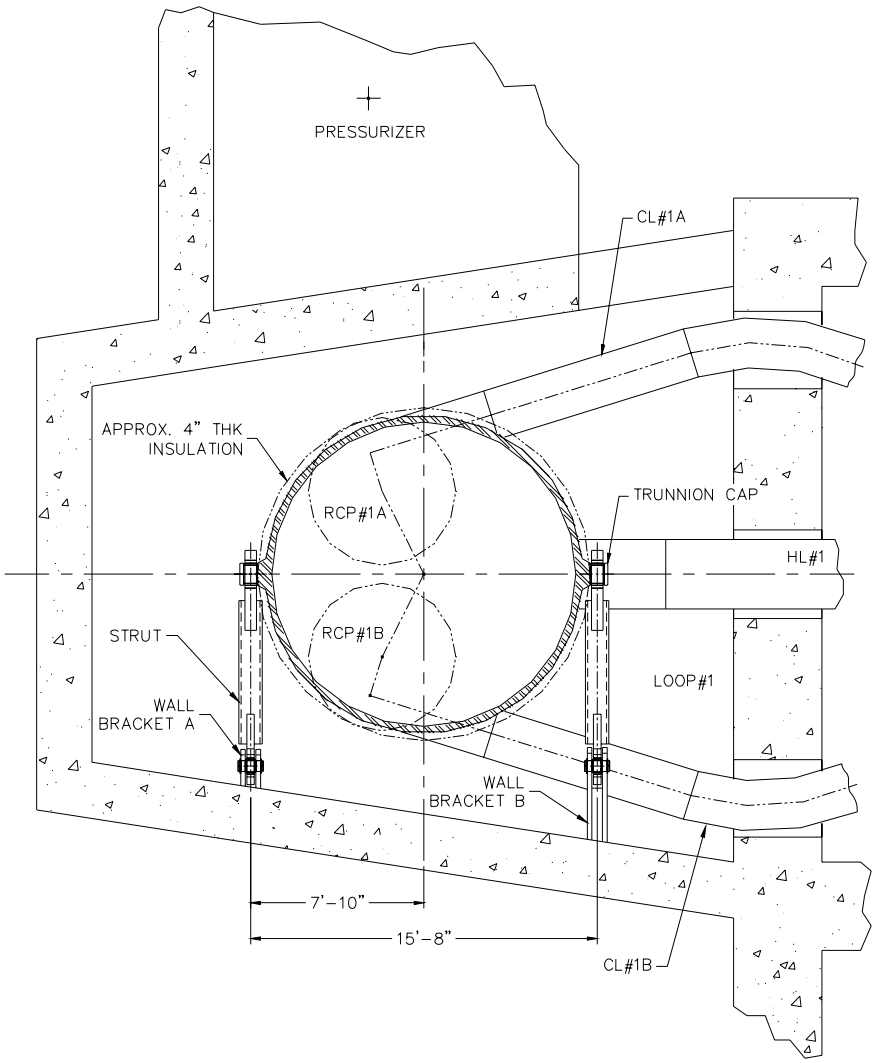

Intermediate Lateral Support

Figure 3.8.3-5 (Sheet 4 of 5)

Steam Generator Supports

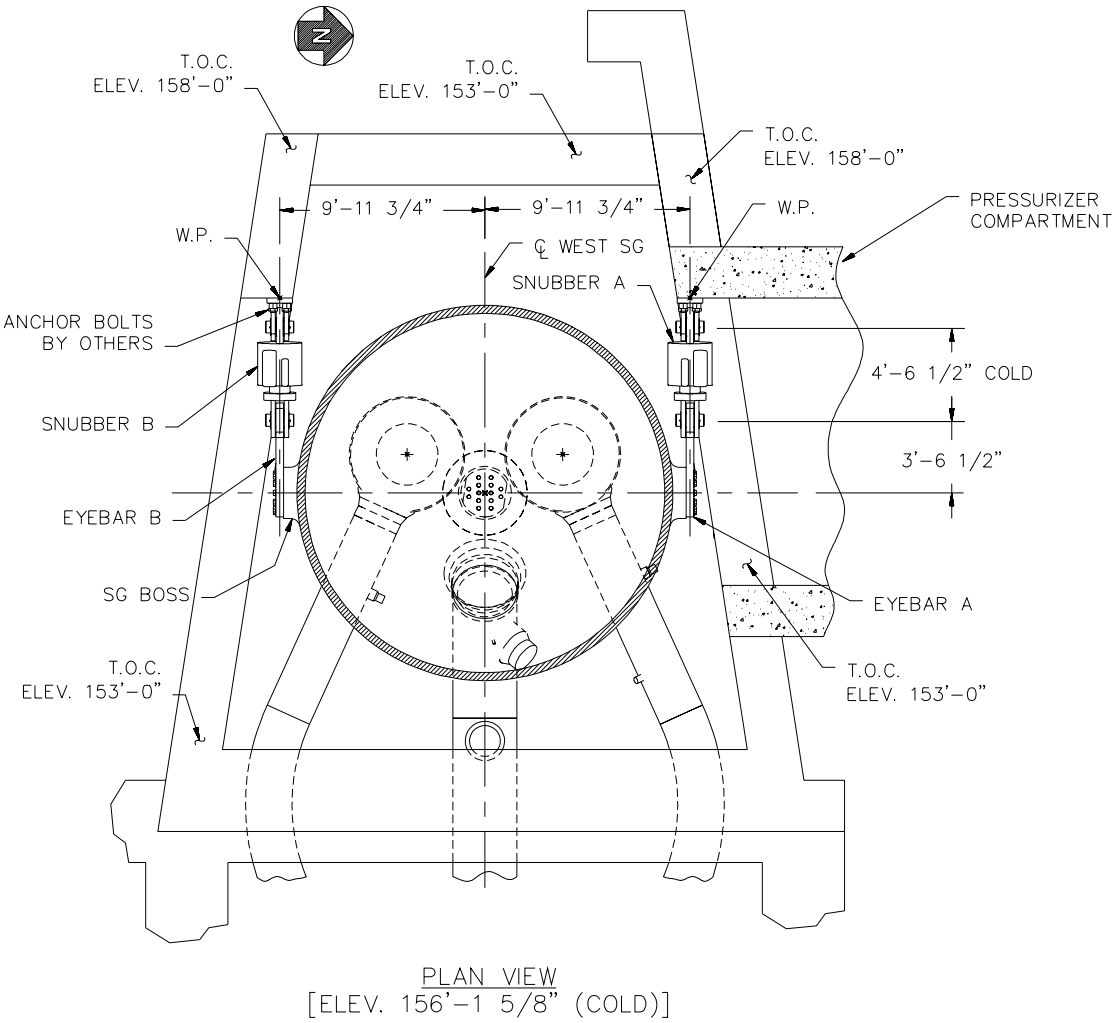

Upper Lateral Support

Figure 3.8.3-5 (Sheet 5 of 5)

Steam Generator Supports

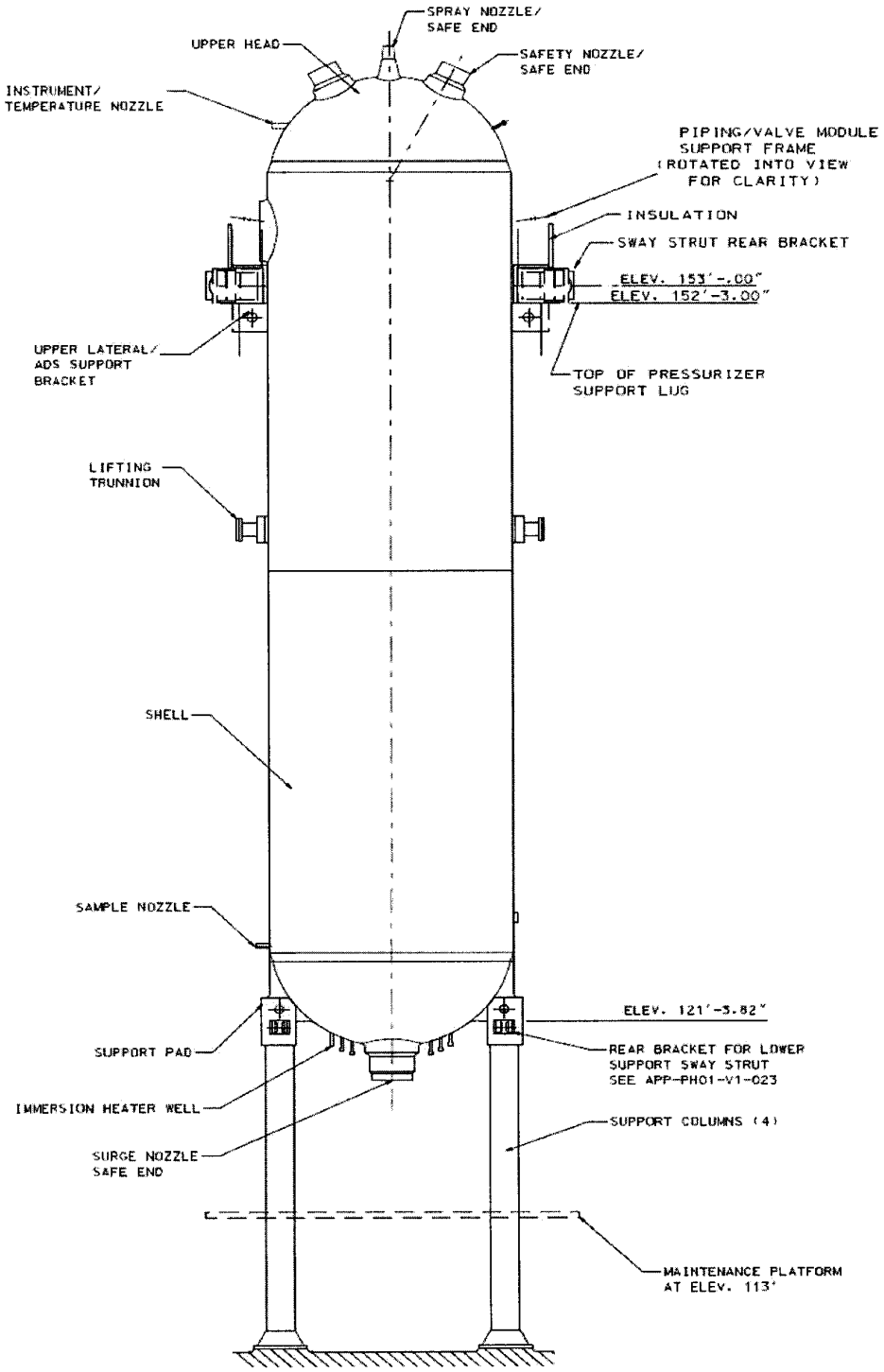

Figure 3.8.3-6 (Sheet 1 of 4)

Pressurizer Support Columns

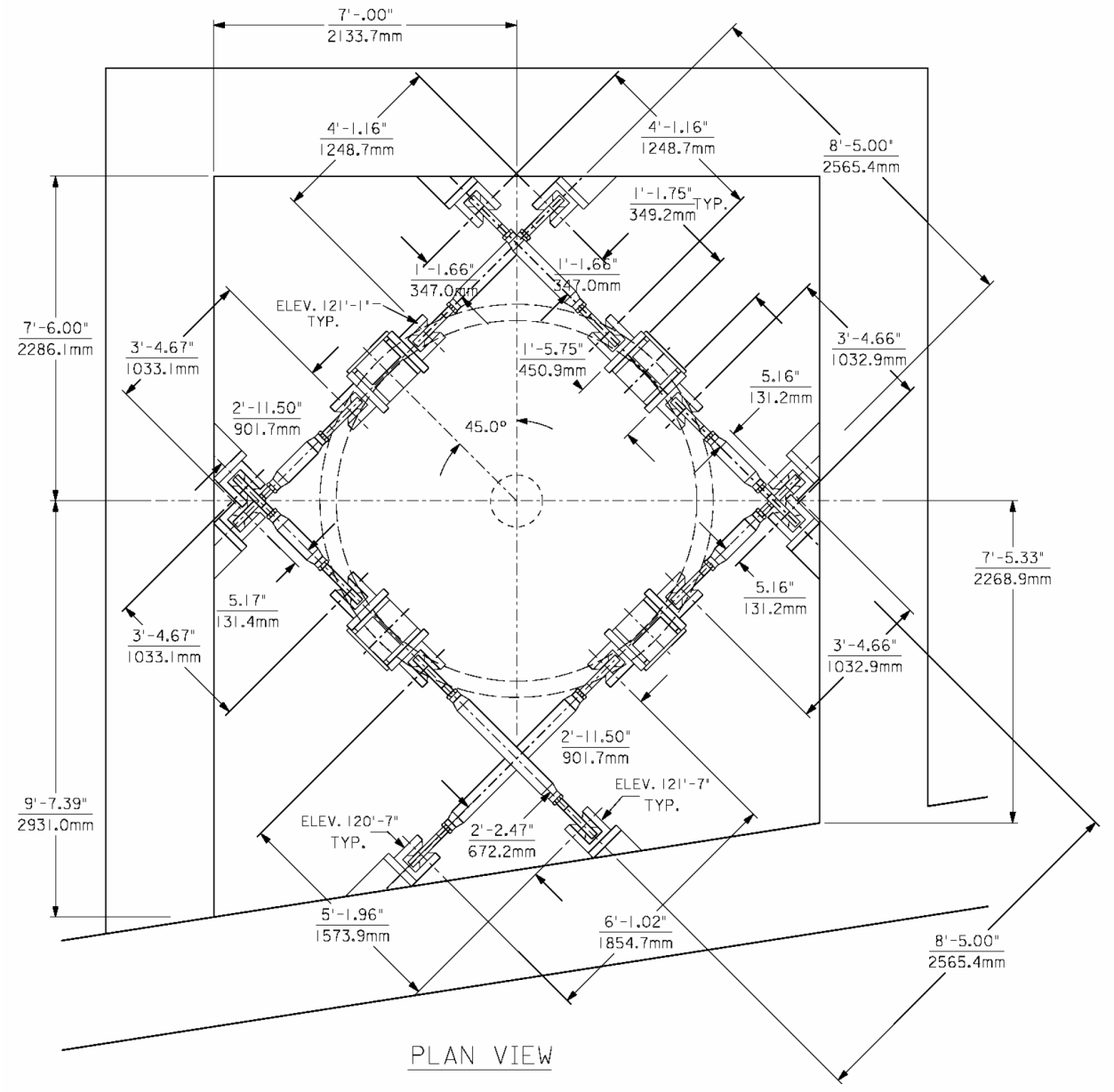

Figure 3.8.3-6 (Sheet 2 of 4)

Pressurizer Lower Lateral Supports

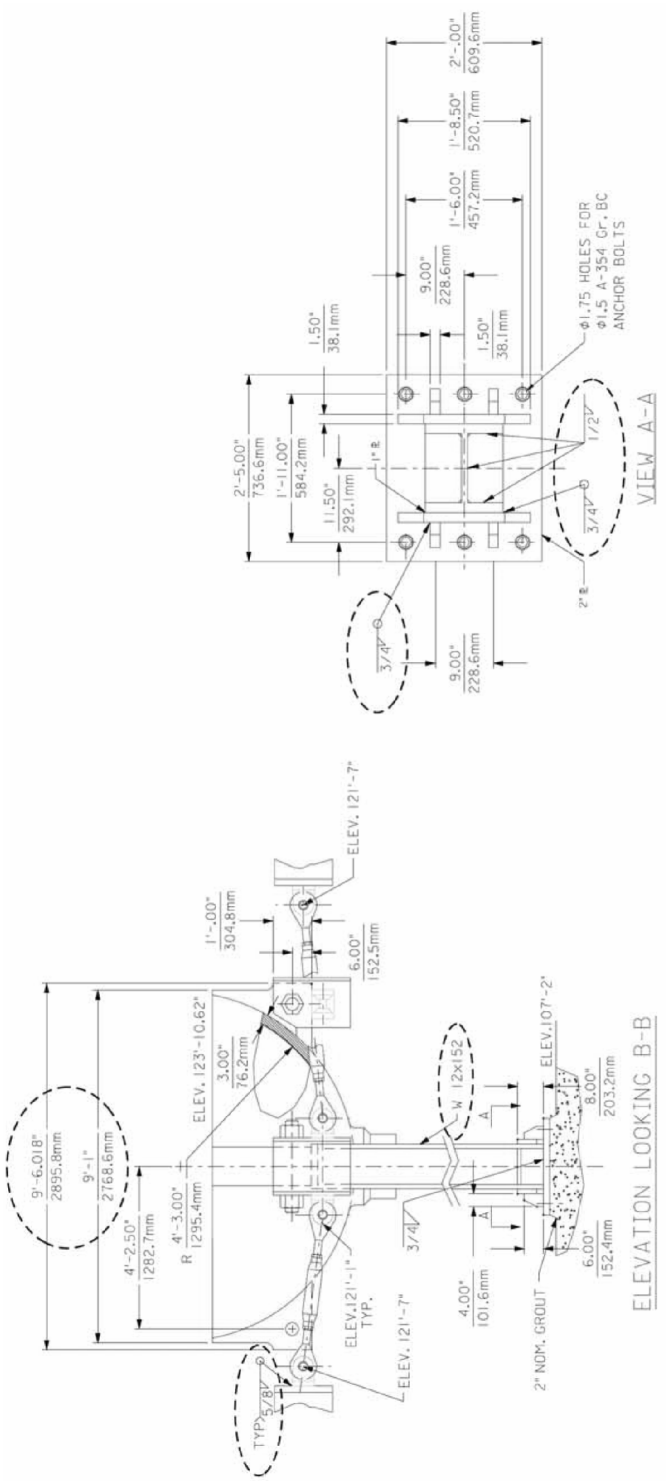

Figure 3.8.3-6 (Sheet 3 of 4)

Pressurizer Lower Supports

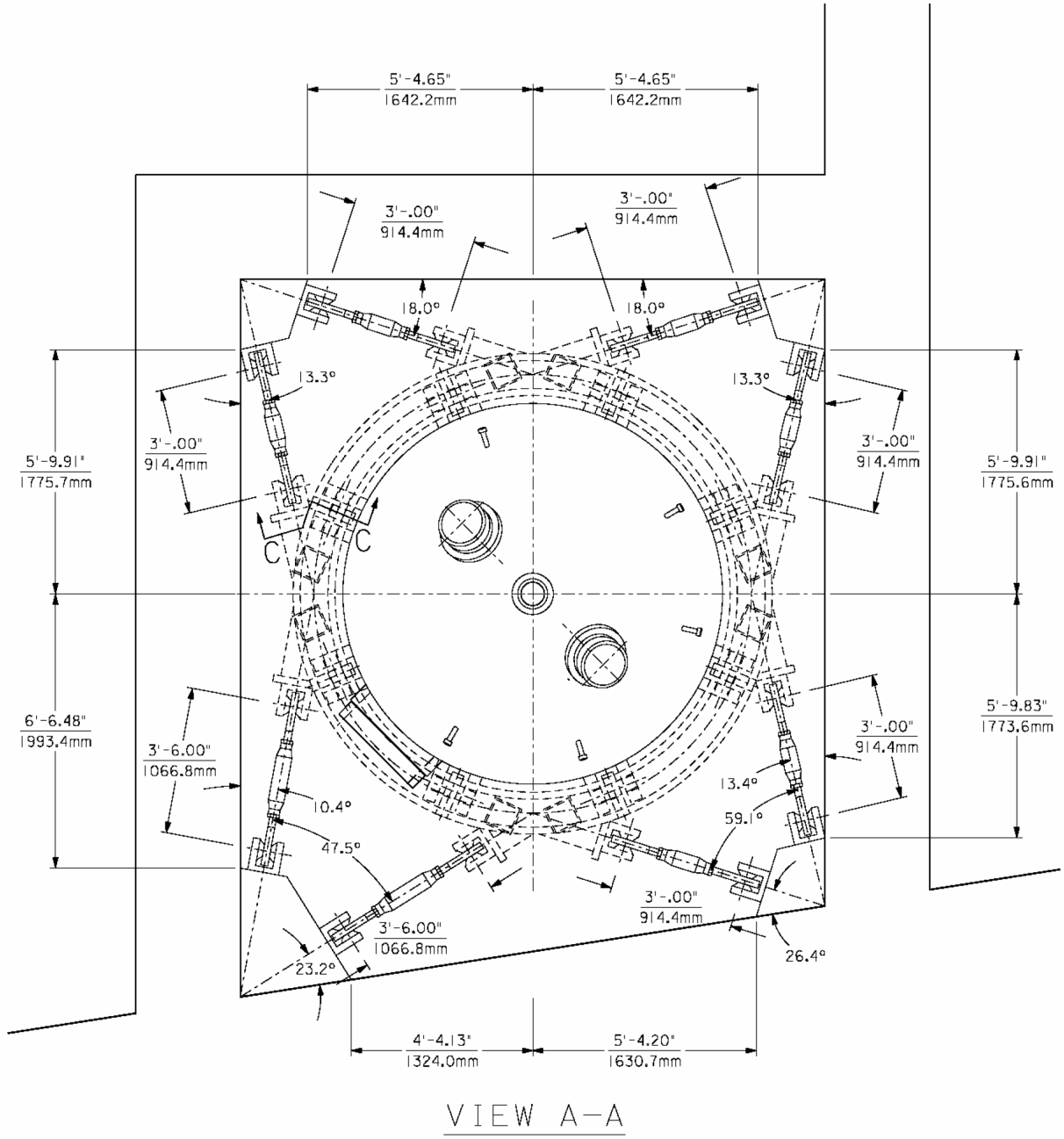

Figure 3.8.3-6 (Sheet 4 of 4)

Pressurizer Upper Supports

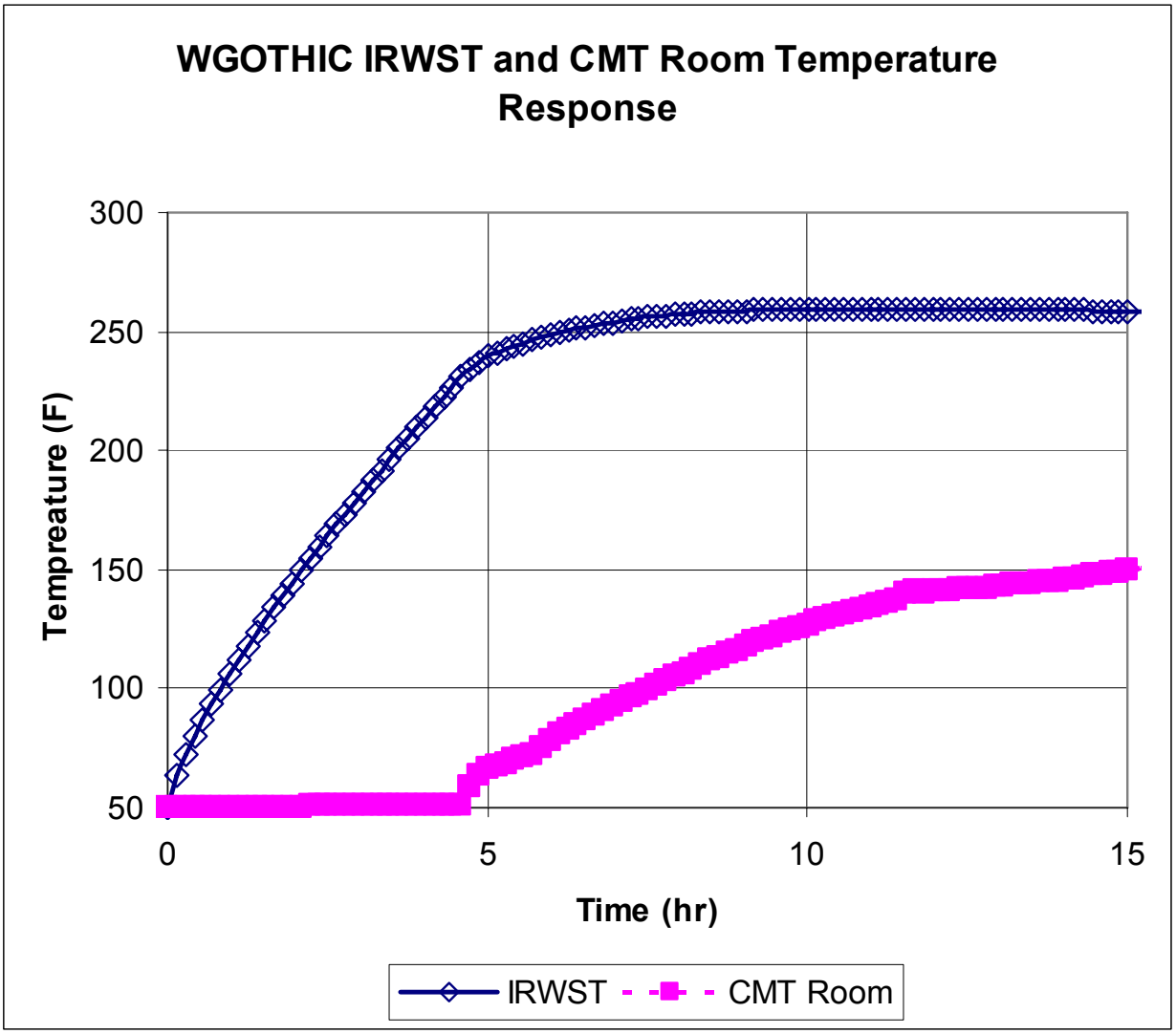

Figure 3.8.3-7

IRWST Temperature Transient

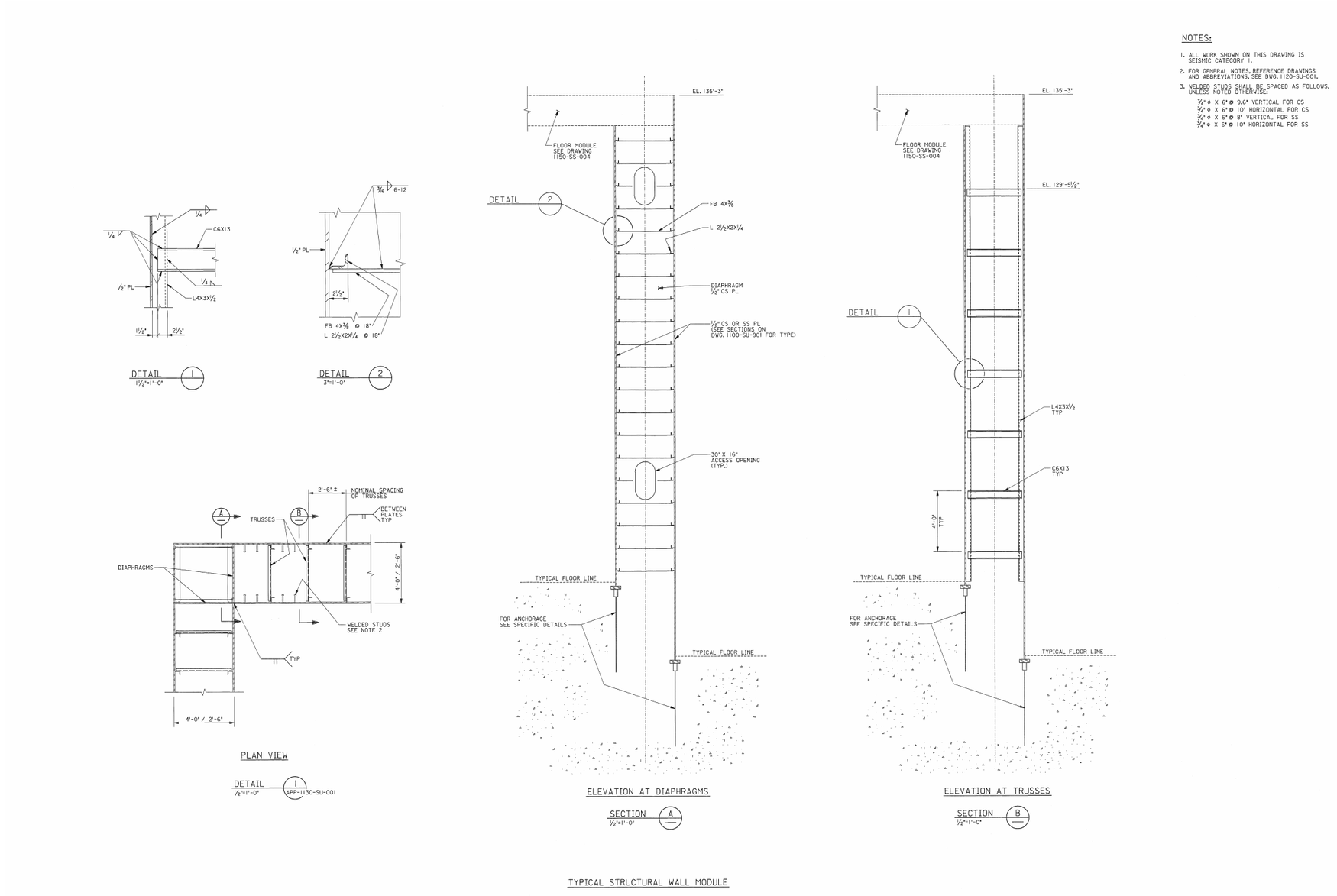

Figure 3.8.3-8 (Sheet 1 of 3)

[*Structural Modules – Typical Design Details*]*

*NRC Staff approval is required prior to implementing a change in this information; see DCD Introduction Section 3.5.

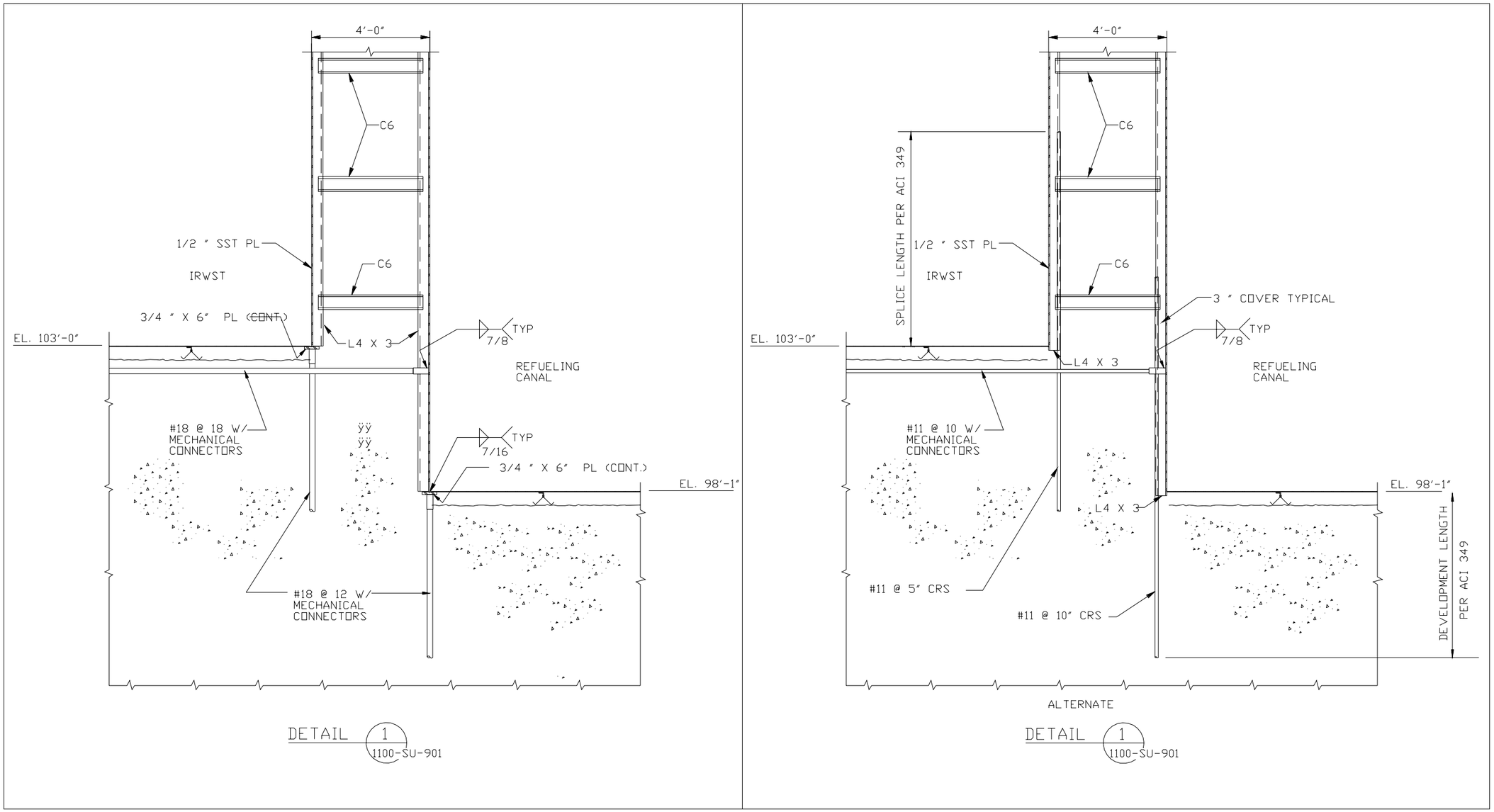

Figure 3.8.3-8 (Sheet 2 of 3)

[*Structural Modules – Typical Design Details*]*

*NRC Staff approval is required prior to implementing a change in this information; see DCD Introduction Section 3.5.

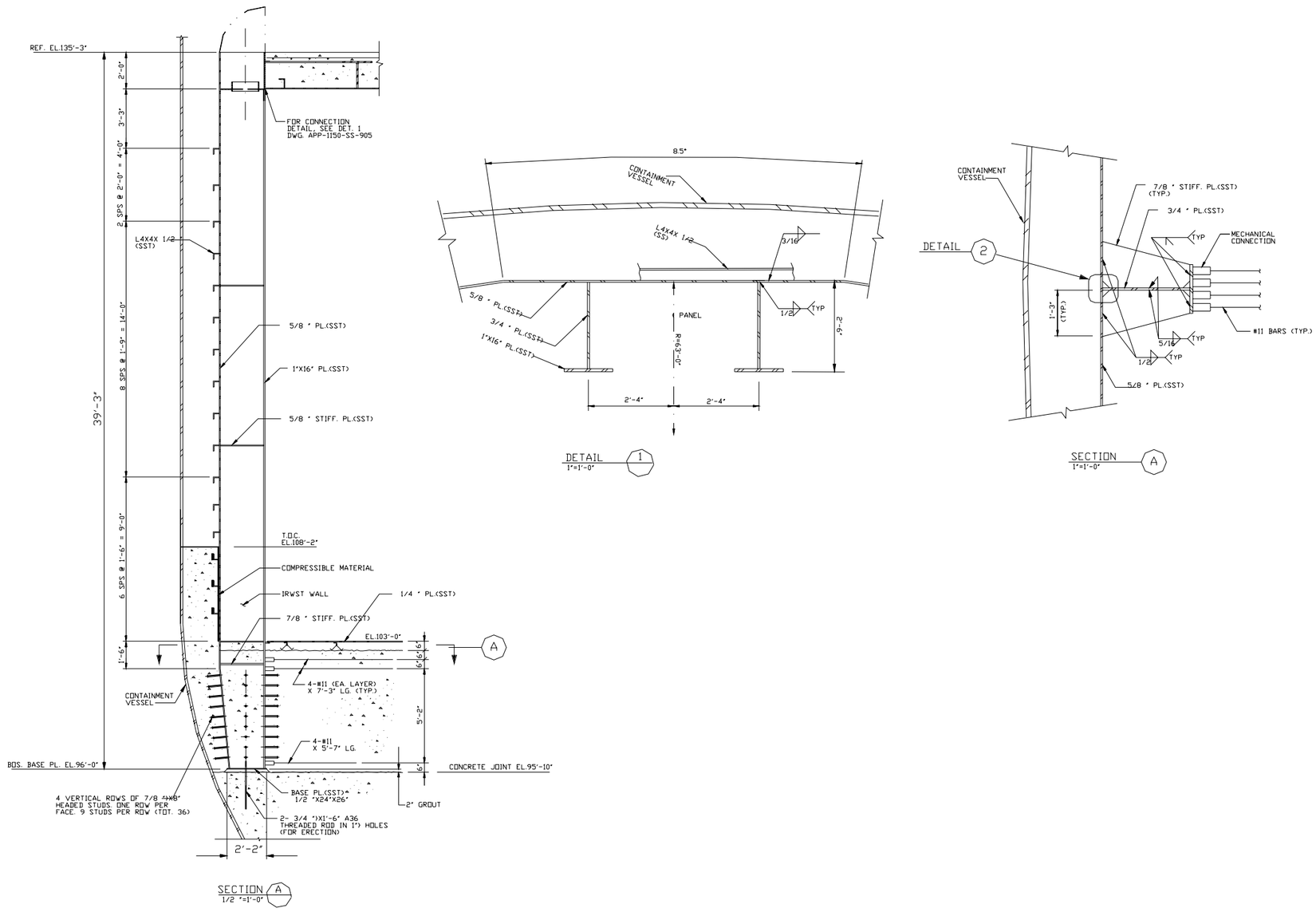

Figure 3.8.3-8 (Sheet 3 of 3)

[*Structural Modules – Typical Design Details*]*

*NRC Staff approval is required prior to implementing a change in this information; see DCD Introduction Section 3.5.

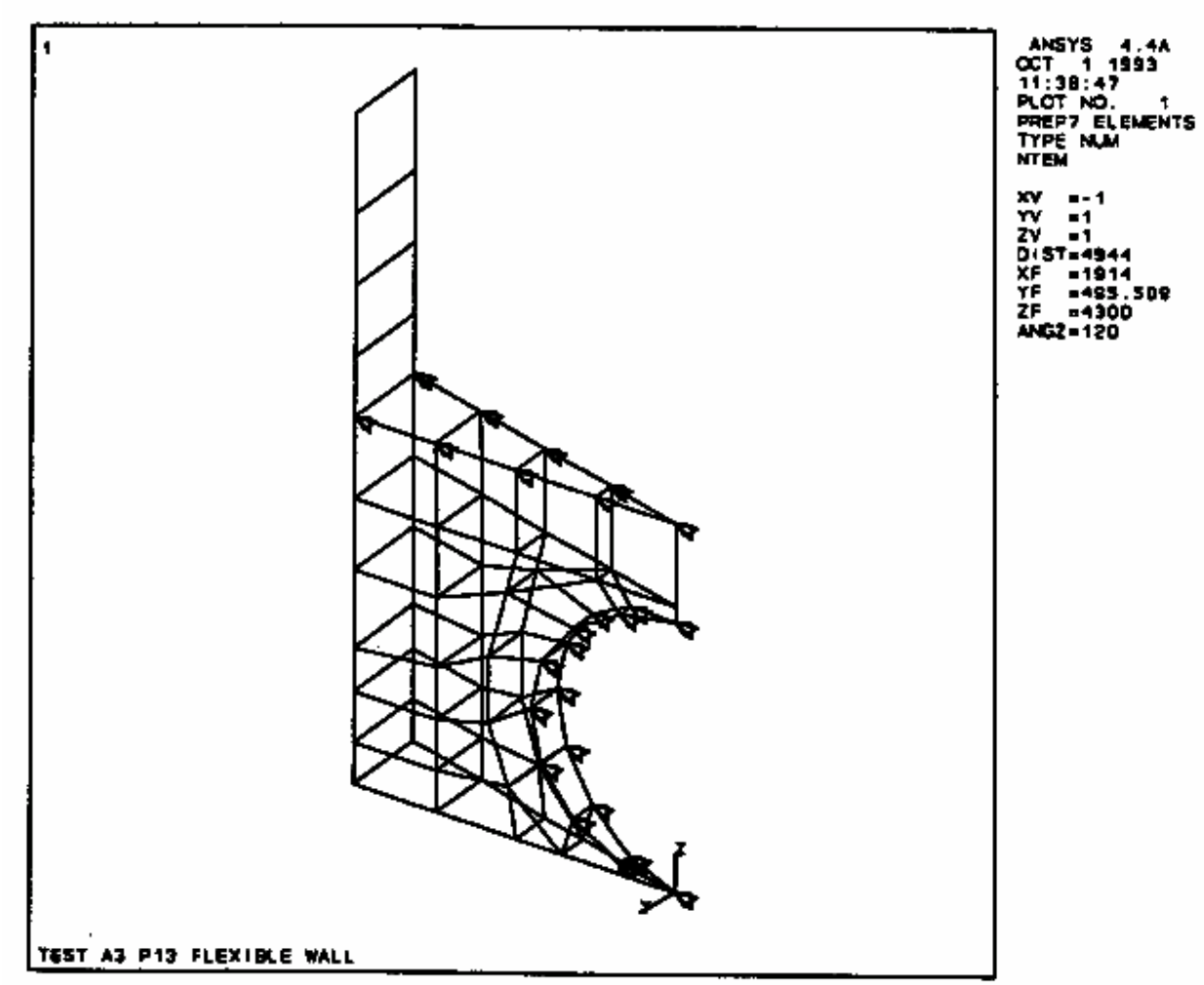

Figure 3.8.3-9

Test Tank Finite Element Model

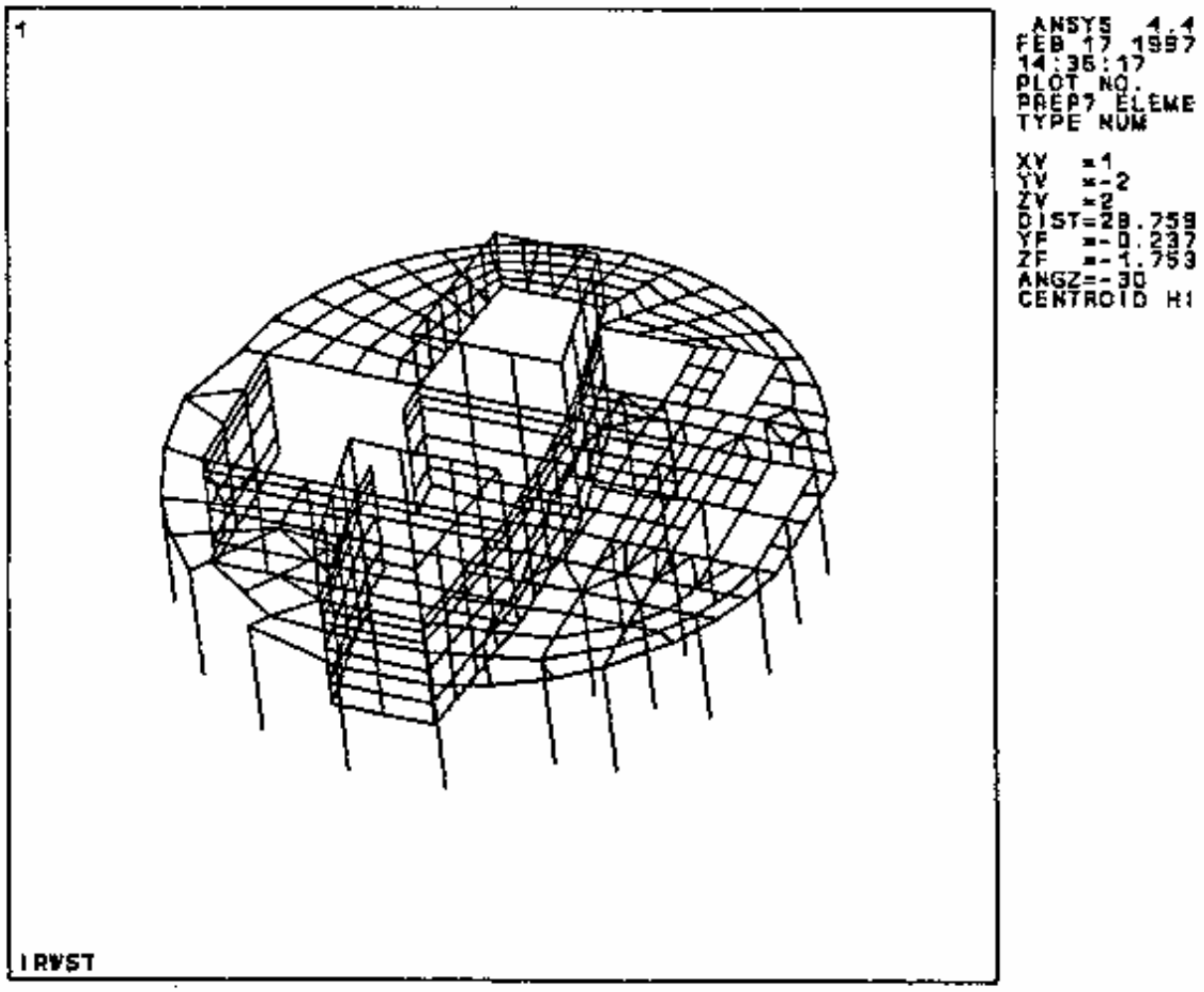

Figure 3.8.3-10 (Sheet 1 of 2)

IRWST Fluid Structure Finite Element Model
CIS Structural Model

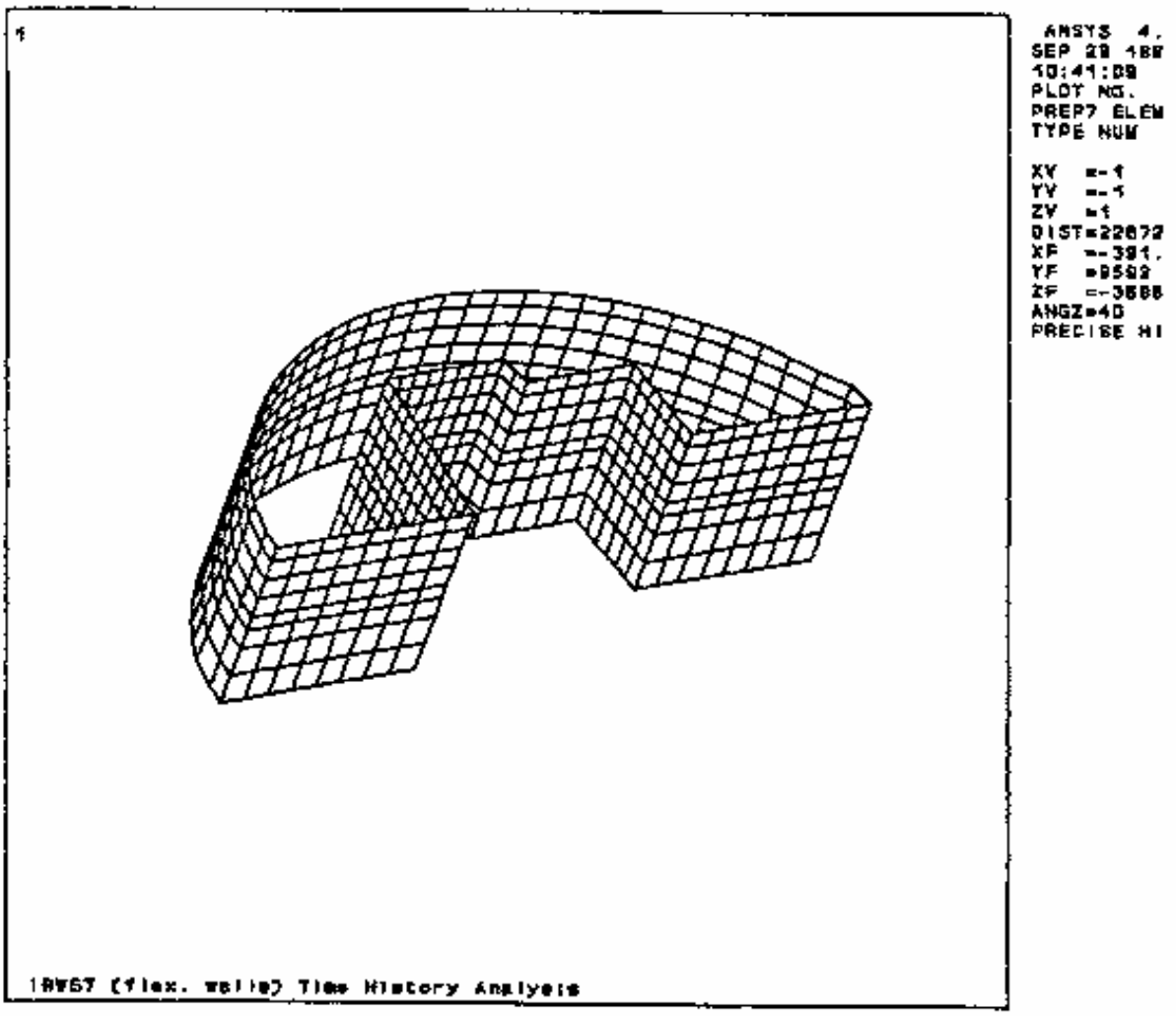

Figure 3.8.3-10 (Sheet 2 of 2)

IRWST Fluid Structure Finite Element Model
IRWST Structural Model

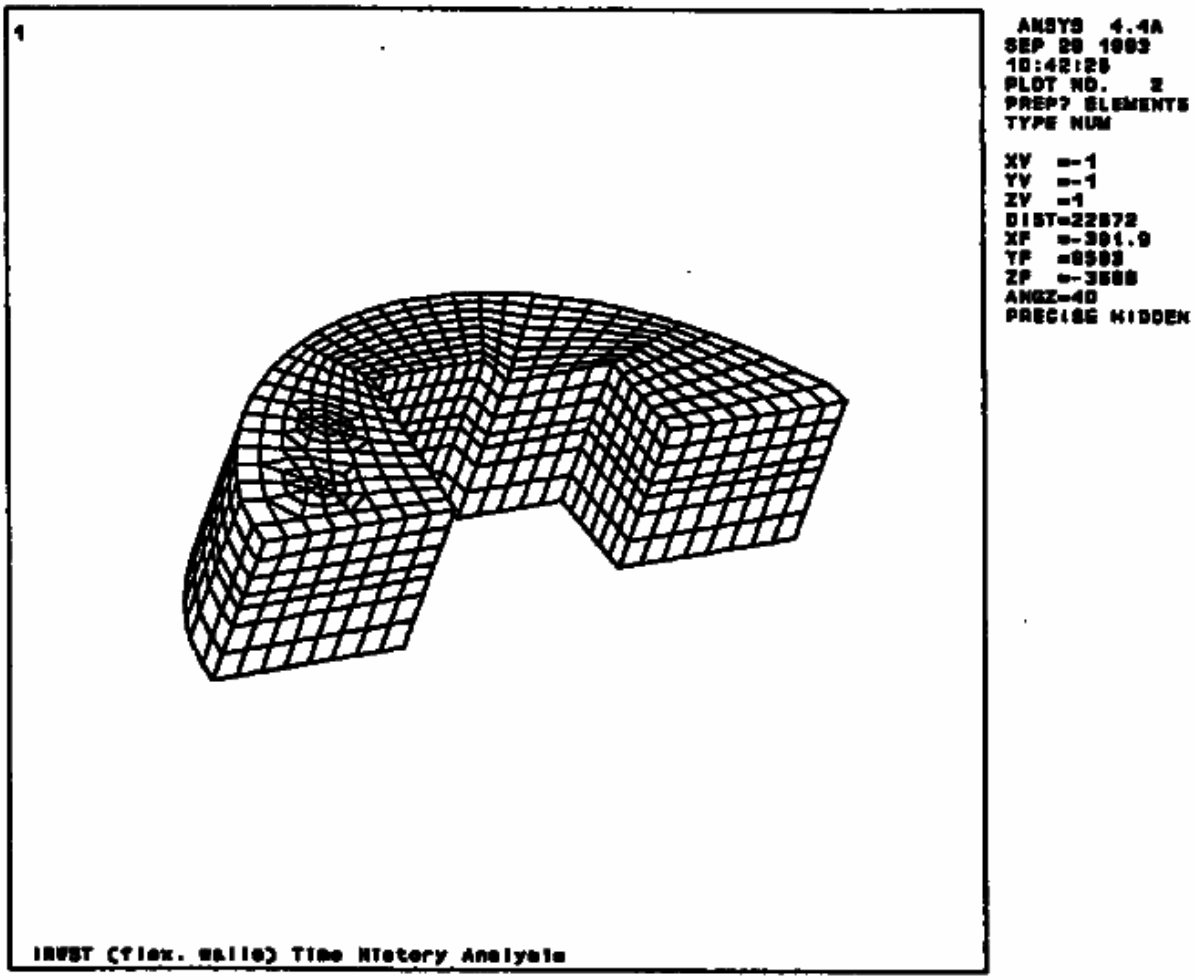

Figure 3.8.3-11

IRWST Fluid Structure Finite Element Model
Fluid Model

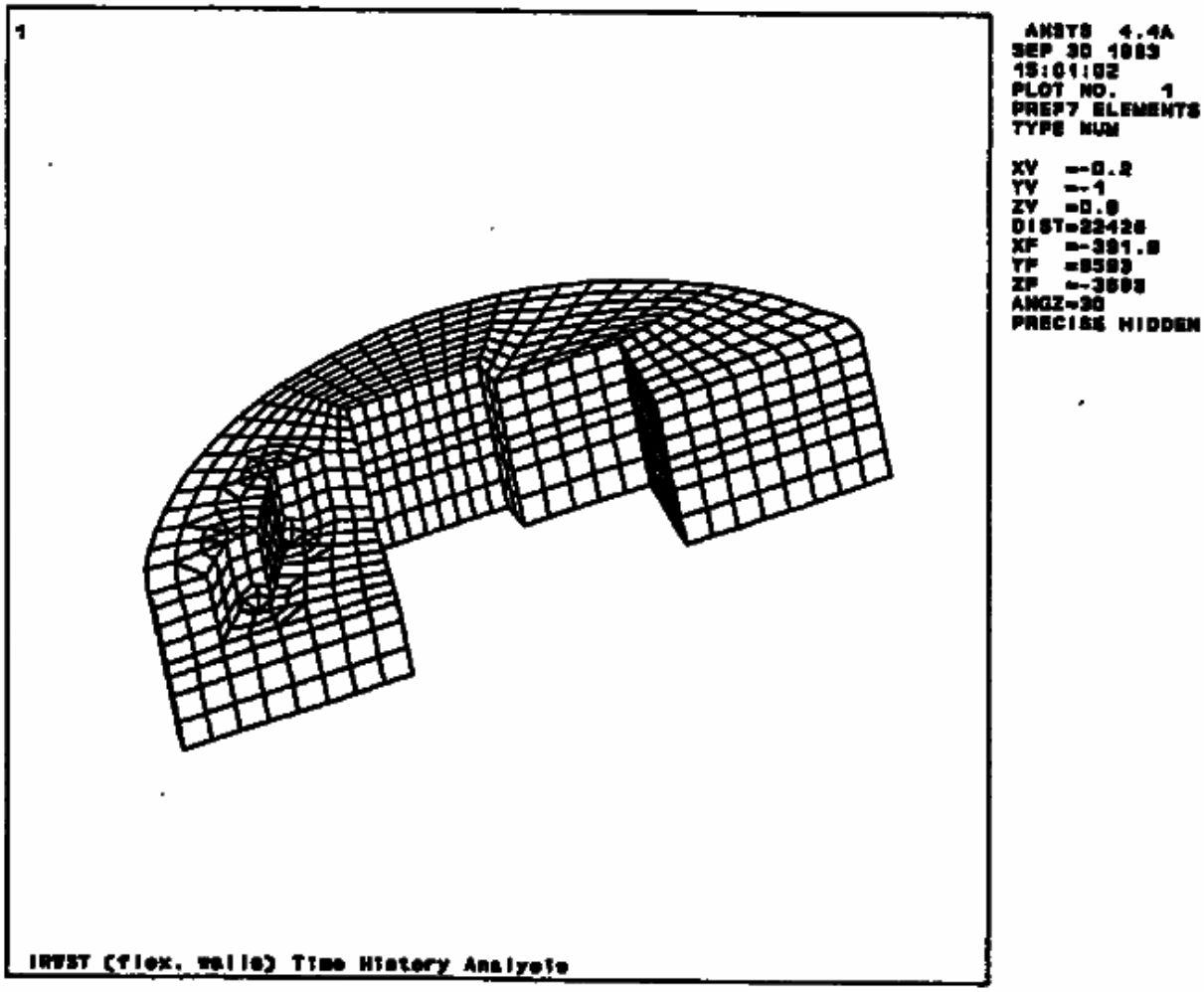

Figure 3.8.3-12

IRWST Fluid Structure Finite Element Model
Sparger Region Detail

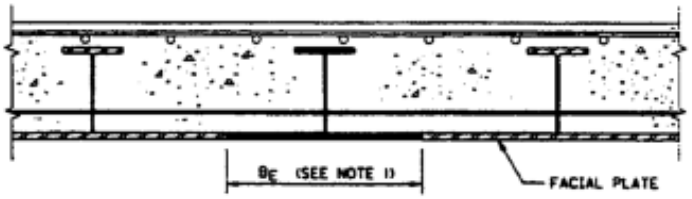

FACIAL PLATE IN COMPRESSION

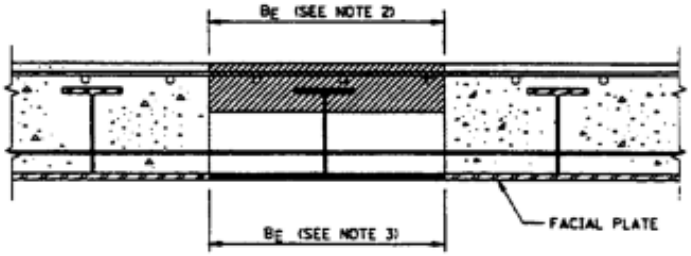

FACIAL PLATE IN TENSION

EFFECTIVE SECTIONS FOR FLOOR MODULES

NOTES:

1. FOR FACIAL PLATE IN COMPRESSION, b_e, IS DETERMINED PER SECTION 3.8.3.5.4.2
2. EFFECTIVE WIDTH OF CONCRETE, b_e, IS DETERMINED PER SECTION Q 1.11.1 OF AISC N690.
3. FOR FACIAL PLATE IN TENSION, b_e, IS TAKEN TO BE ONE HALF OF THE DISTANCE TO THE ADJACENT BEAMS.

Figure 3.8.3-13

Effective Sections for Floor Modules

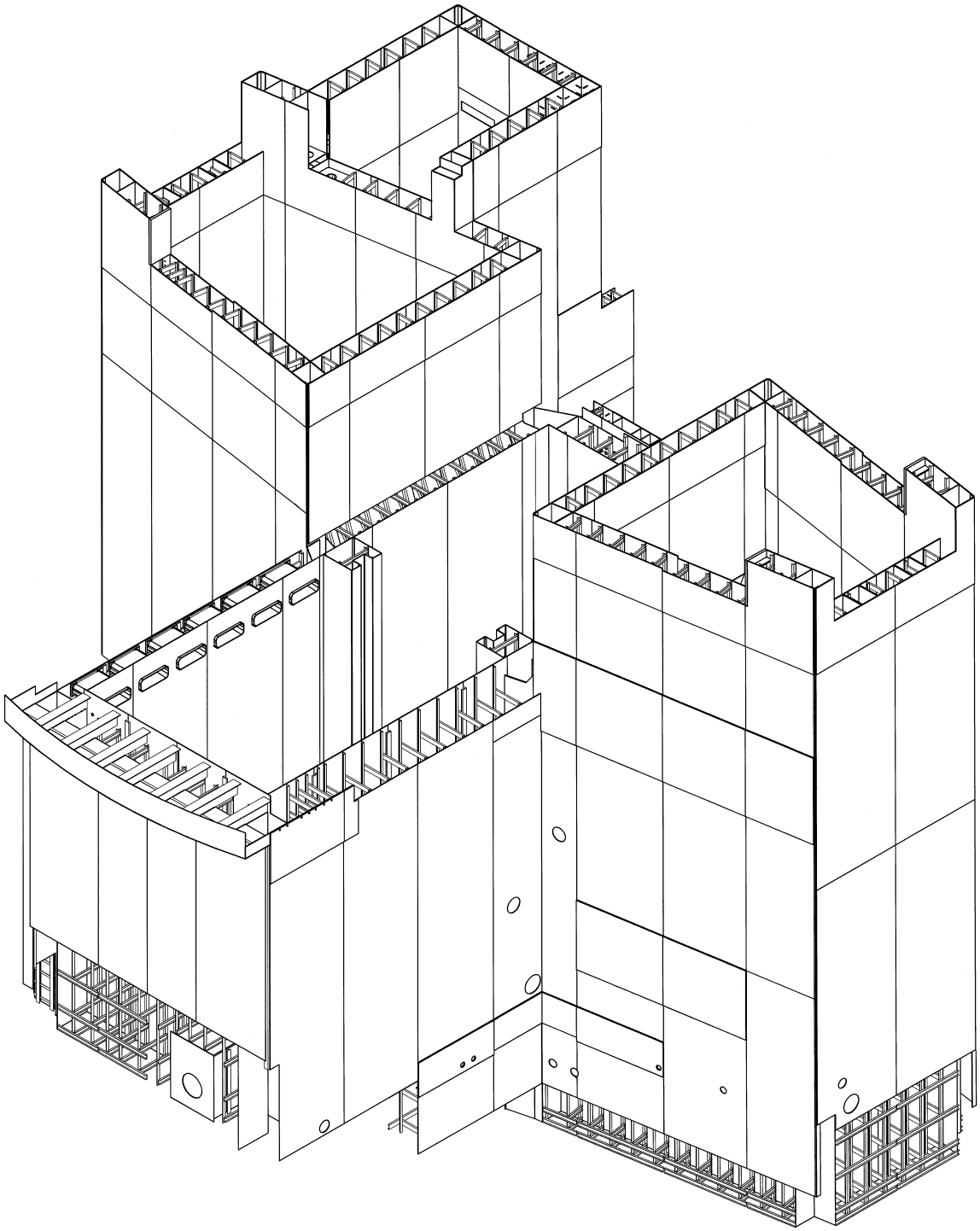

Figure 3.8.3-14 (Sheet 1 of 5)

[*CA-01 Module*]*

*NRC Staff approval is required prior to implementing a change in this information; see DCD Introduction Section 3.5.

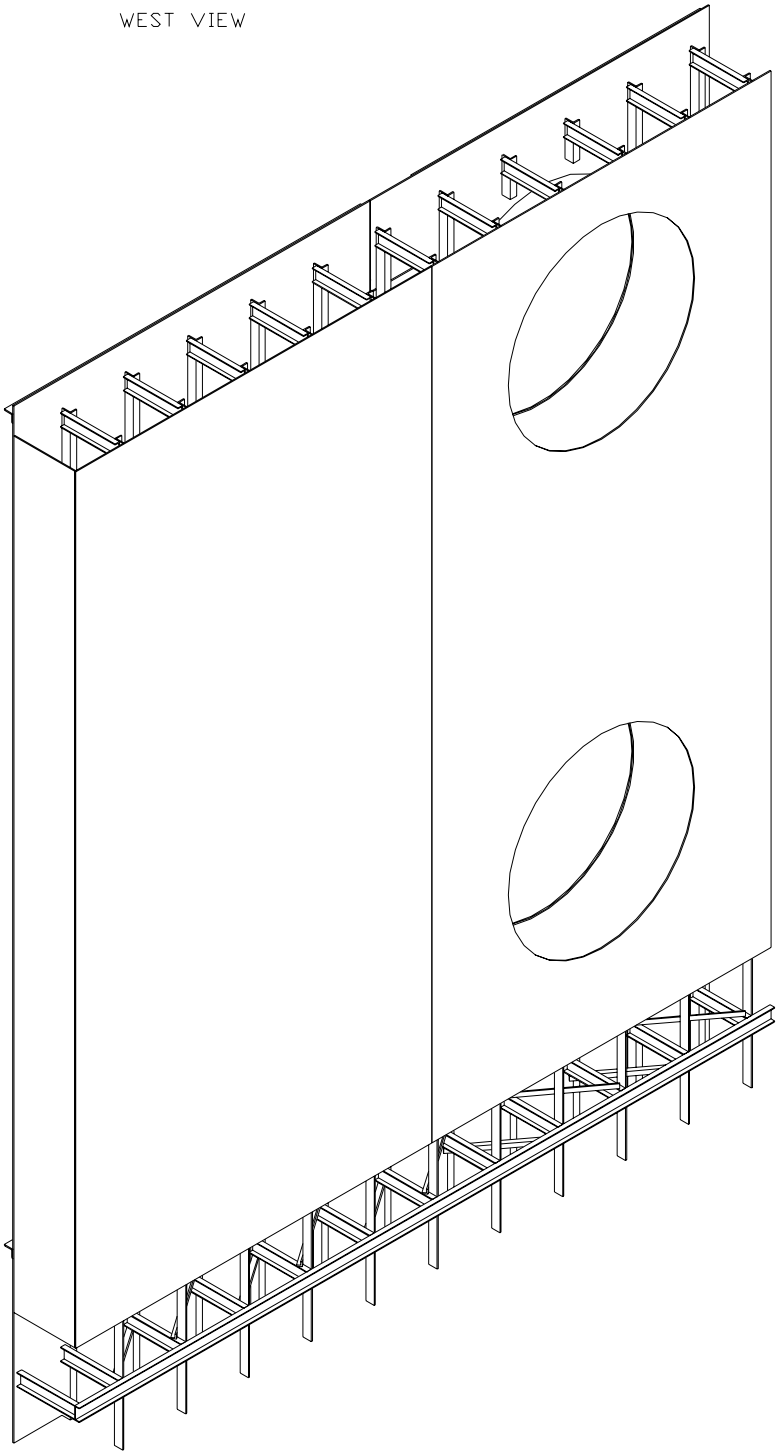

Figure 3.8.3-14 (Sheet 2 of 5)

[*CA-02 Module*]*

*NRC Staff approval is required prior to implementing a change in this information; see DCD Introduction Section 3.5.

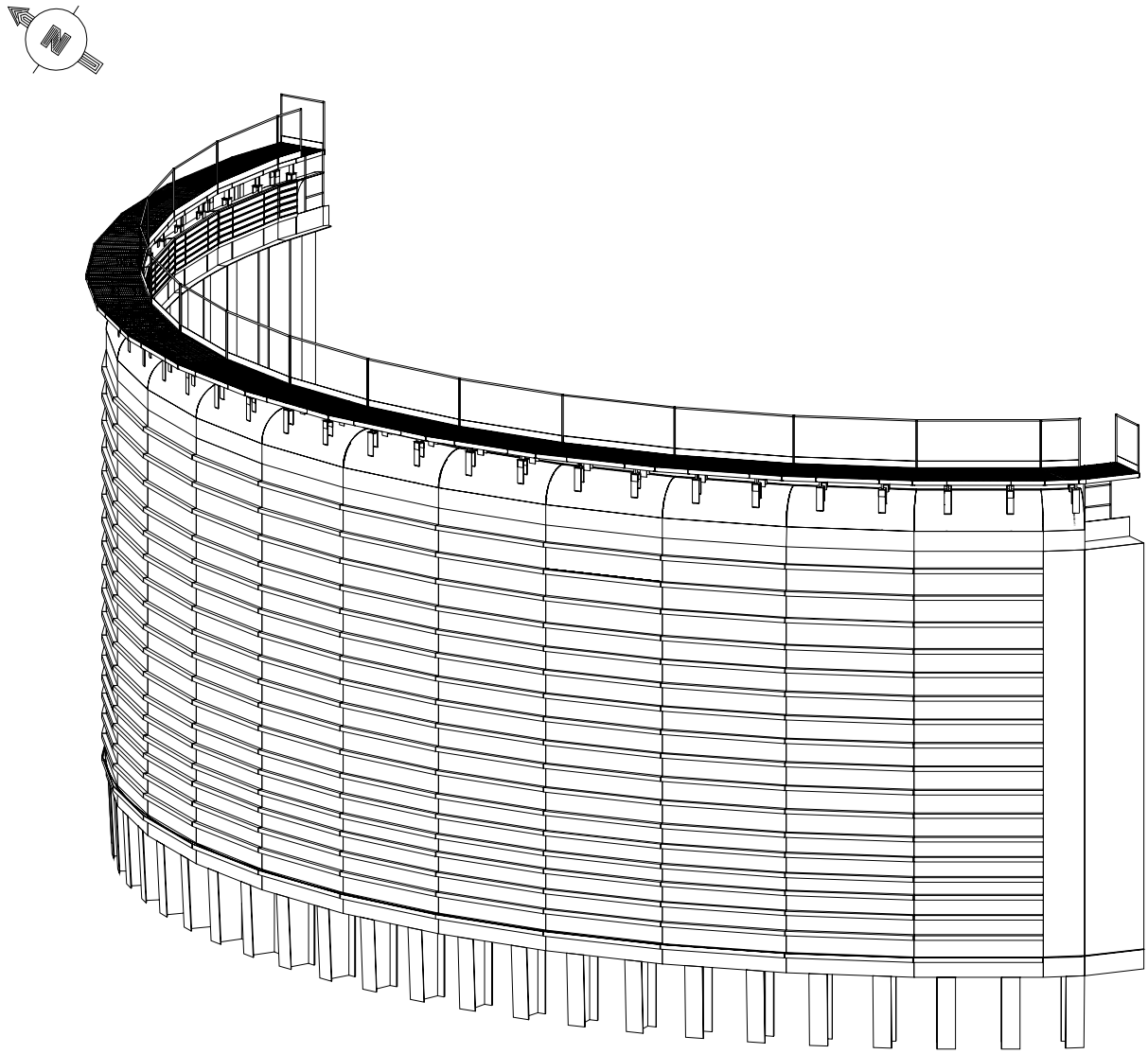

Figure 3.8.3-14 (Sheet 3 of 5)

[*CA-03 Module*]*

*NRC Staff approval is required prior to implementing a change in this information; see DCD Introduction Section 3.5.

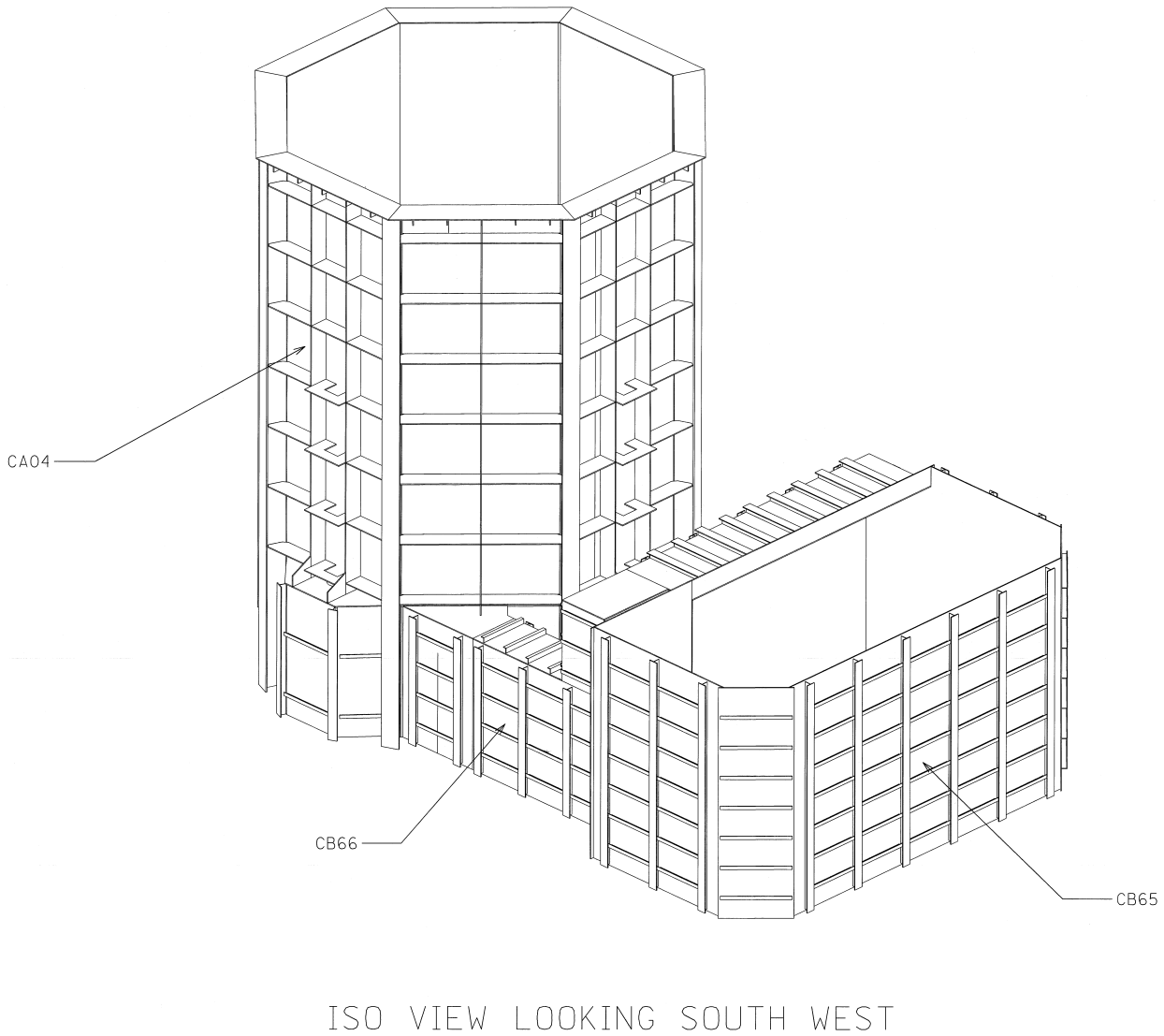

Figure 3.8.3-14 (Sheet 4 of 5)

[*CA-04 Structural Module*]*

*NRC Staff approval is required prior to implementing a change in this information; see DCD Introduction Section 3.5.

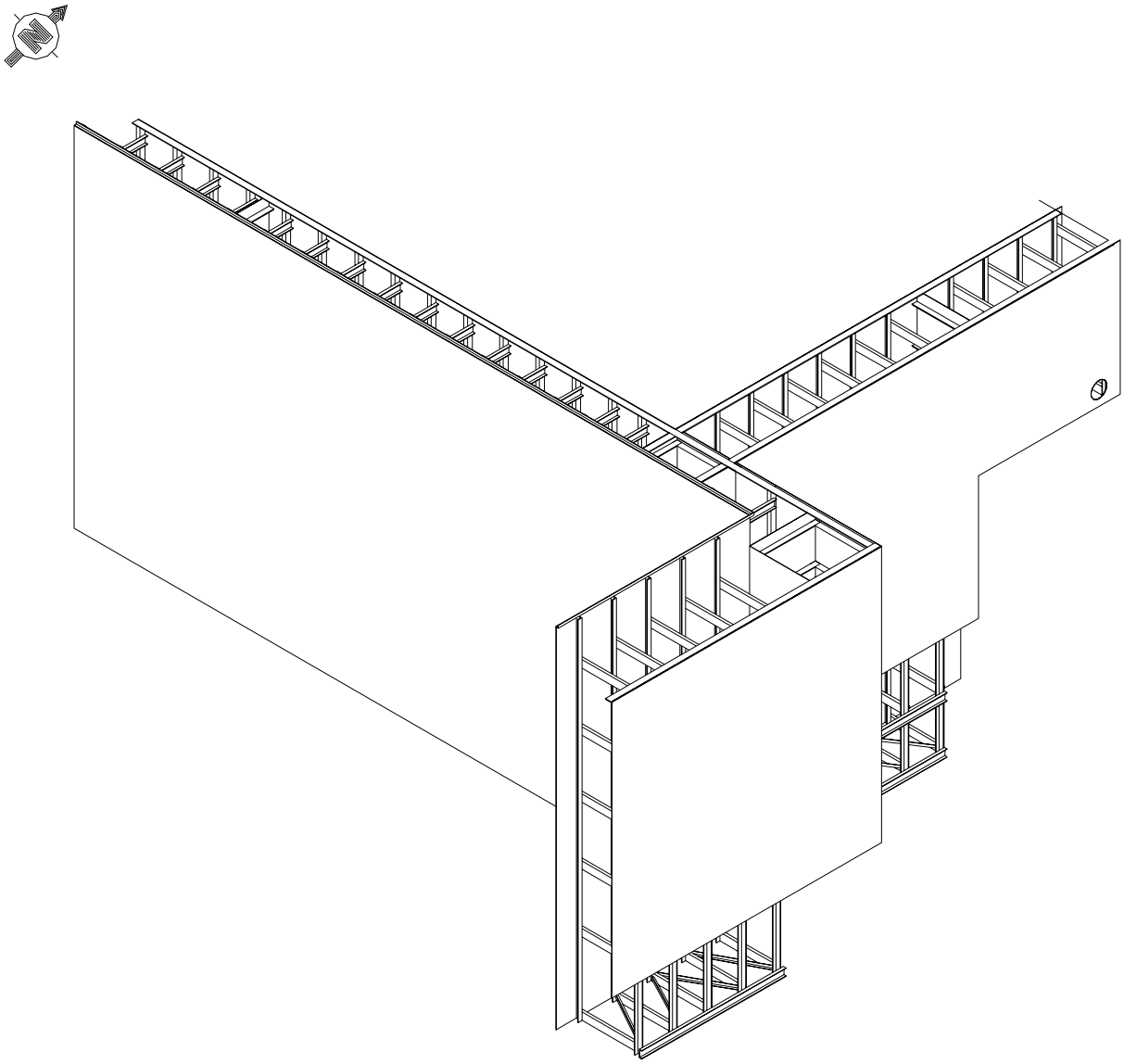

Figure 3.8.3-14 (Sheet 5 of 5)

[*CA-05 Module*]*

*NRC Staff approval is required prior to implementing a change in this information; see DCD Introduction Section 3.5.

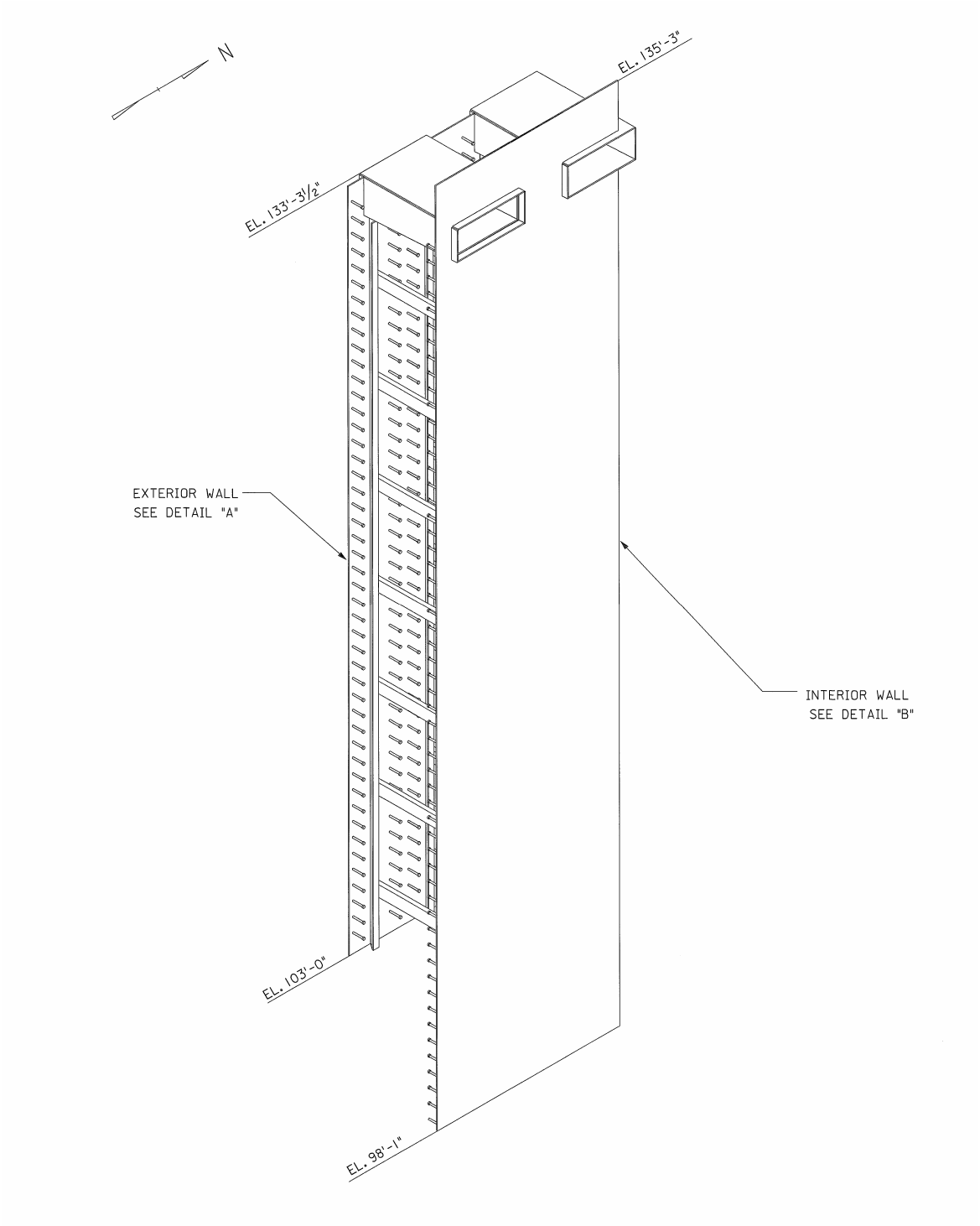

Figure 3.8.3-15 (Sheet 1 of 2)

[*Typical Submodule*]*

*NRC Staff approval is required prior to implementing a change in this information; see DCD Introduction Section 3.5.

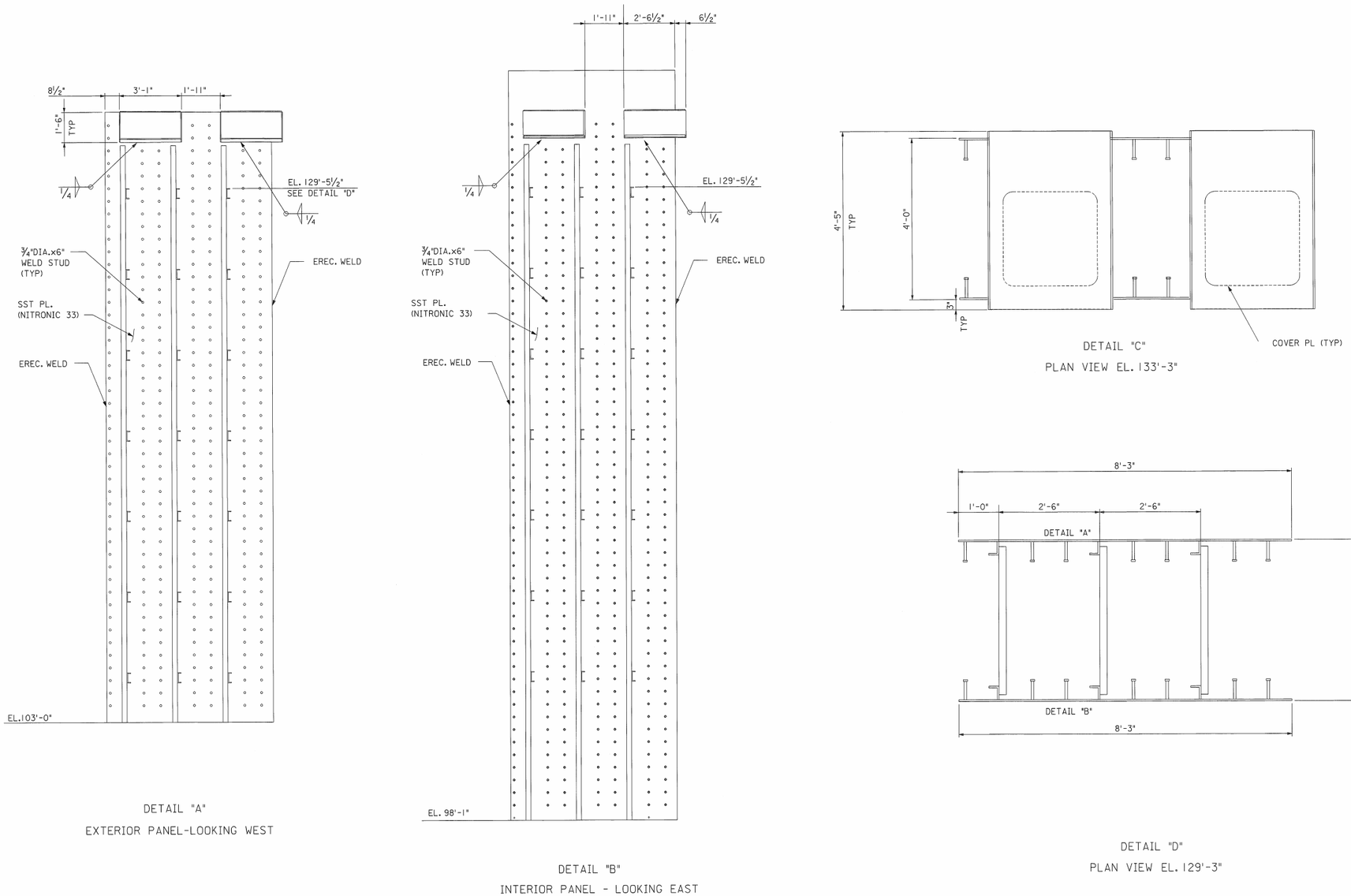

Figure 3.8.3-15 (Sheet 2 of 2)

[*Typical Submodule*]*

*NRC Staff approval is required prior to implementing a change in this information; see DCD Introduction Section 3.5.

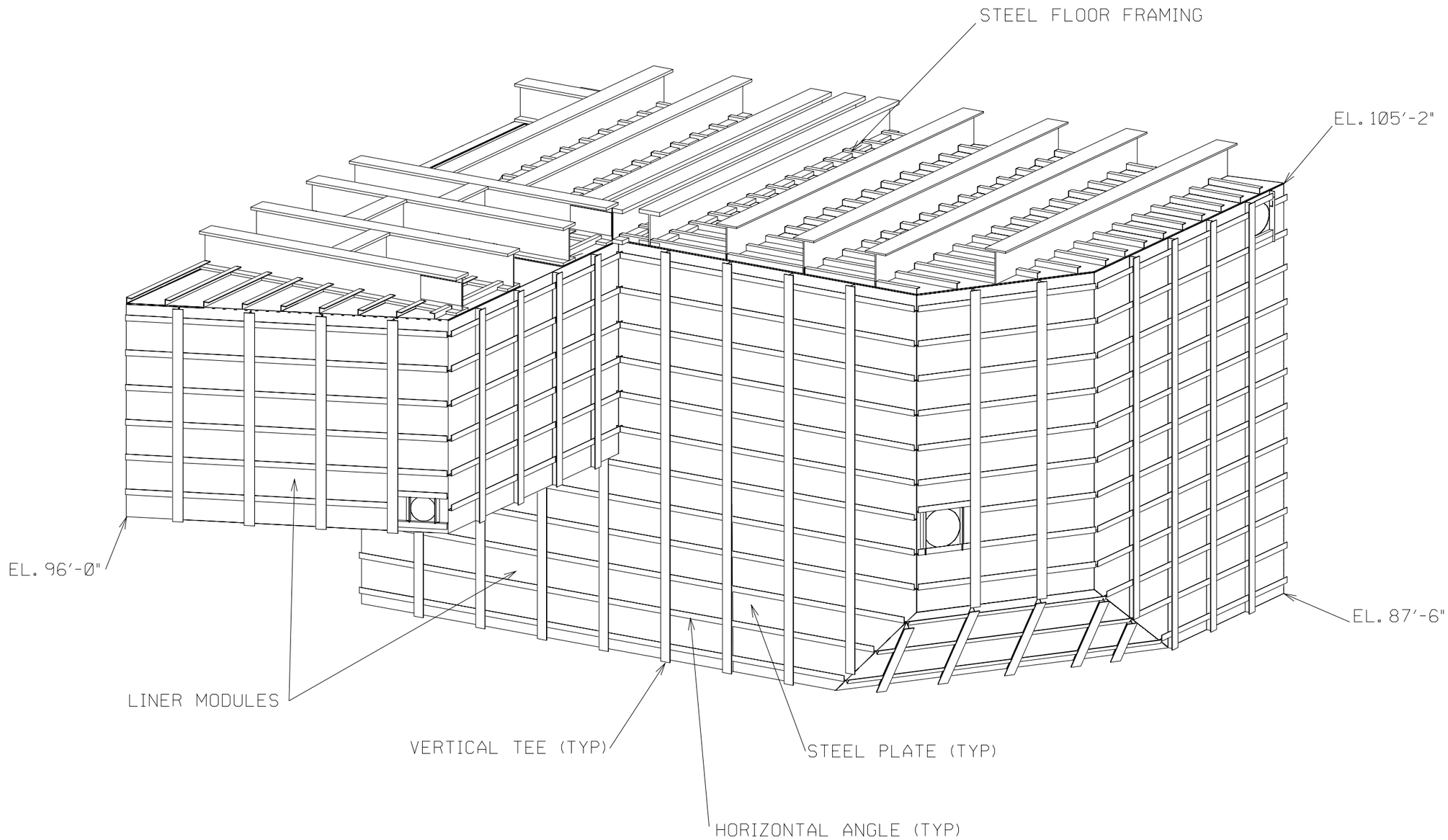

Figure 3.8.3-16

Typical Liner Modules

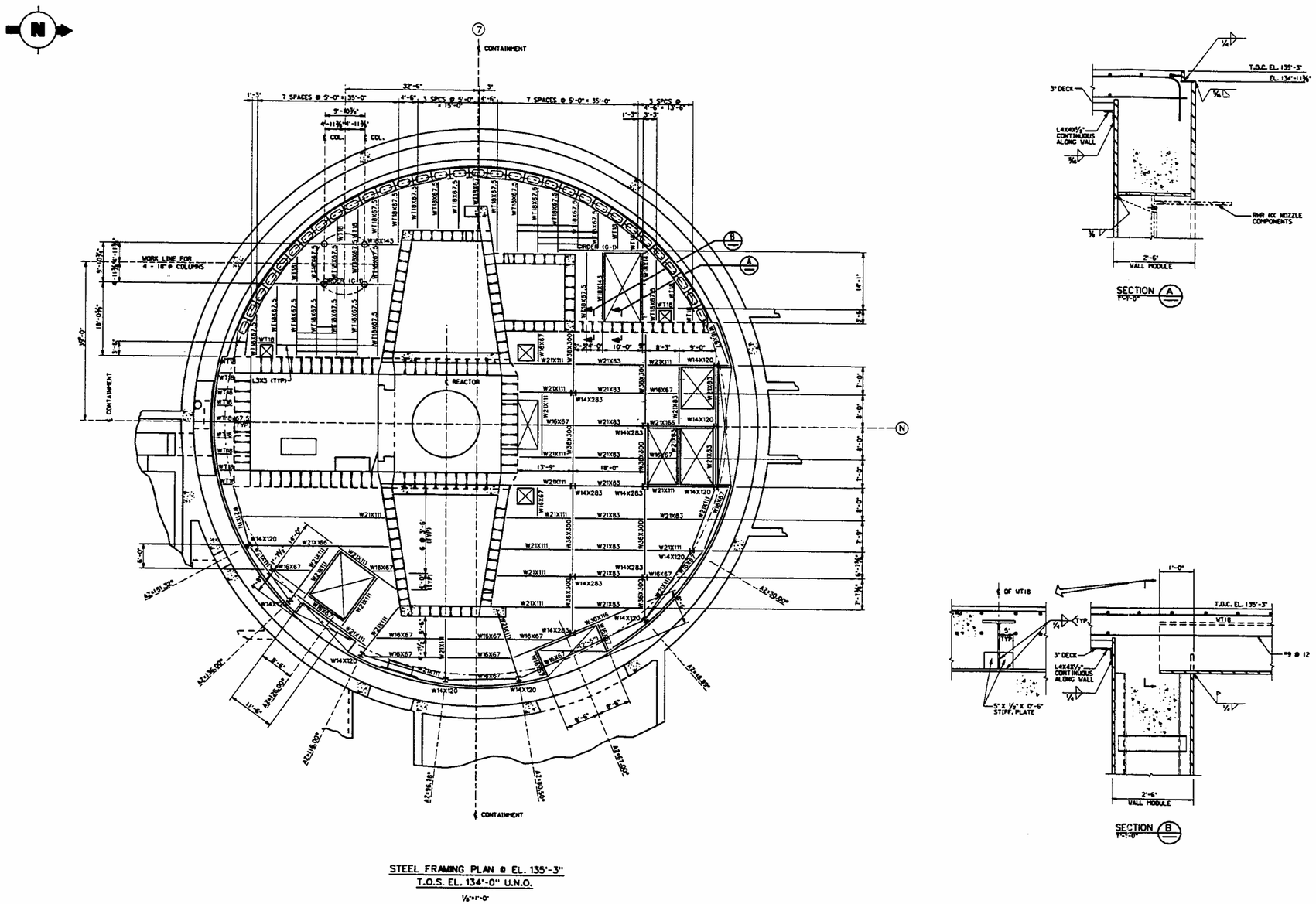

Figure 3.8.3-17 (Sheet 1 of 2)

[*Structural Modules – Typical Design Details*]*

*NRC Staff approval is required prior to implementing a change in this information; see DCD Introduction Section 3.5.

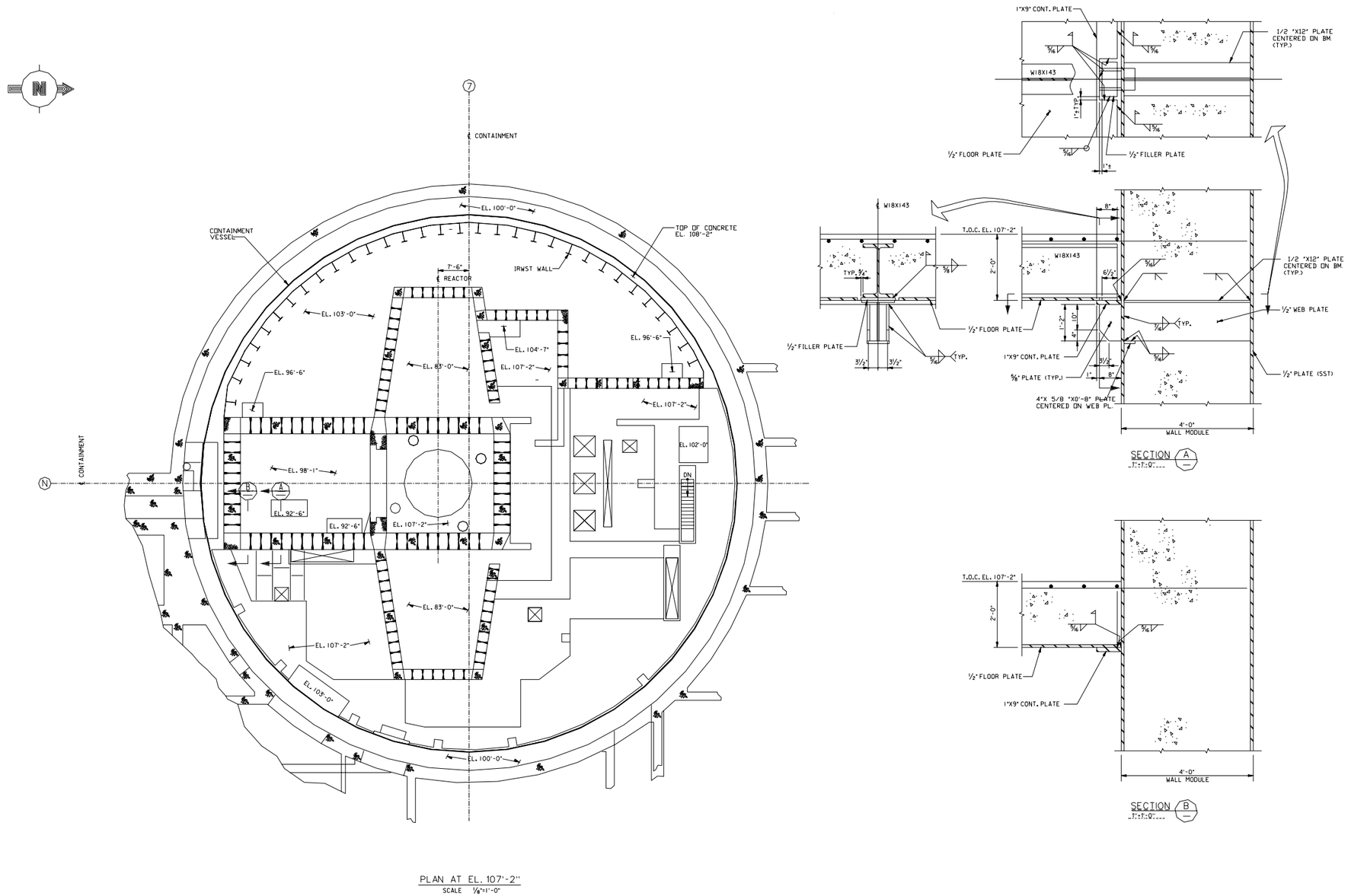

Figure 3.8.3-17 (Sheet 2 of 2)

[*Structural Modules – Typical Design Details*]*

*NRC Staff approval is required prior to implementing a change in this information; see DCD Introduction Section 3.5.

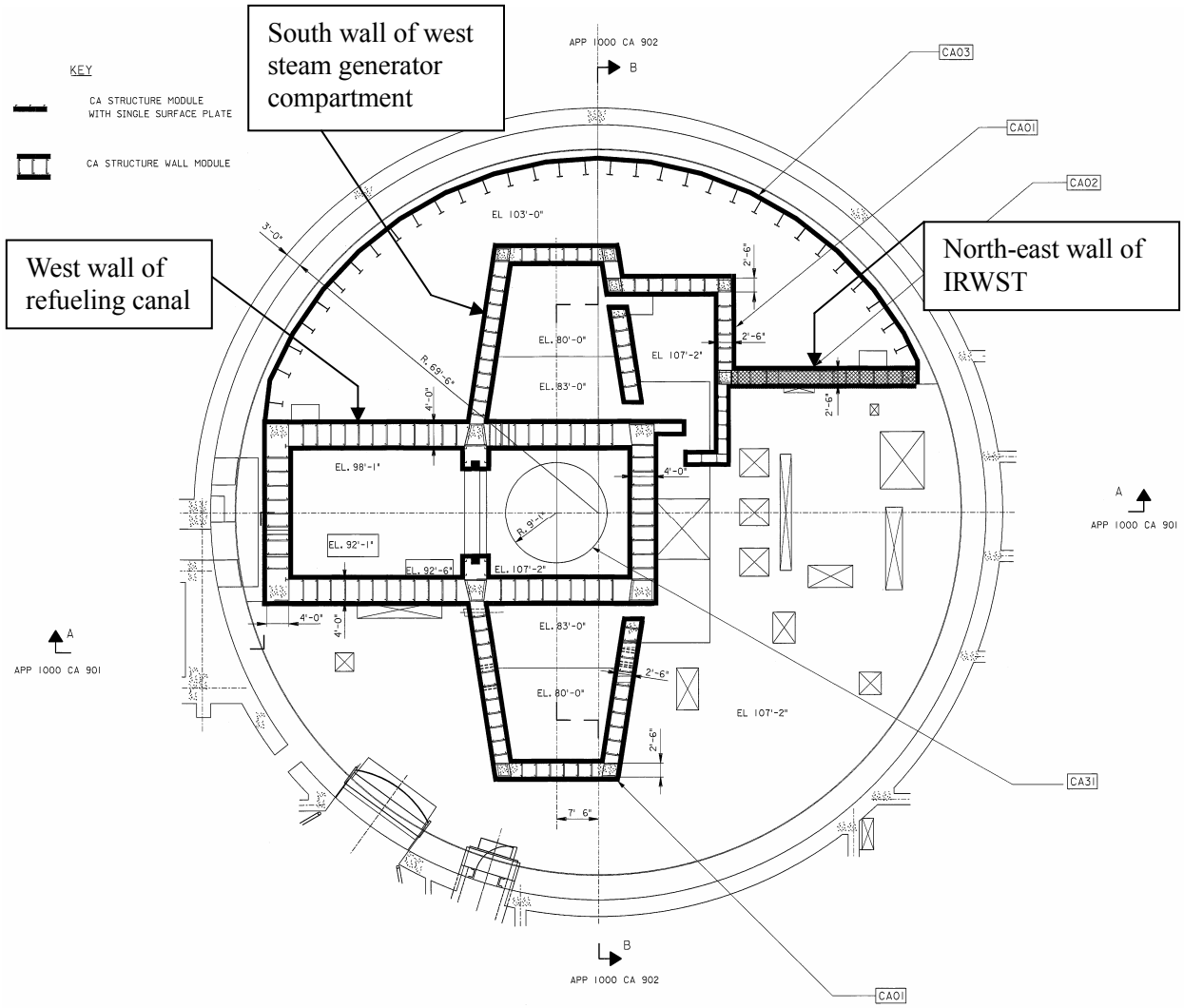

Figure 3.8.3-18

[*Location of Structural Wall Modules*]*

*NRC Staff approval is required prior to implementing a change in this information; see DCD Introduction Section 3.5.

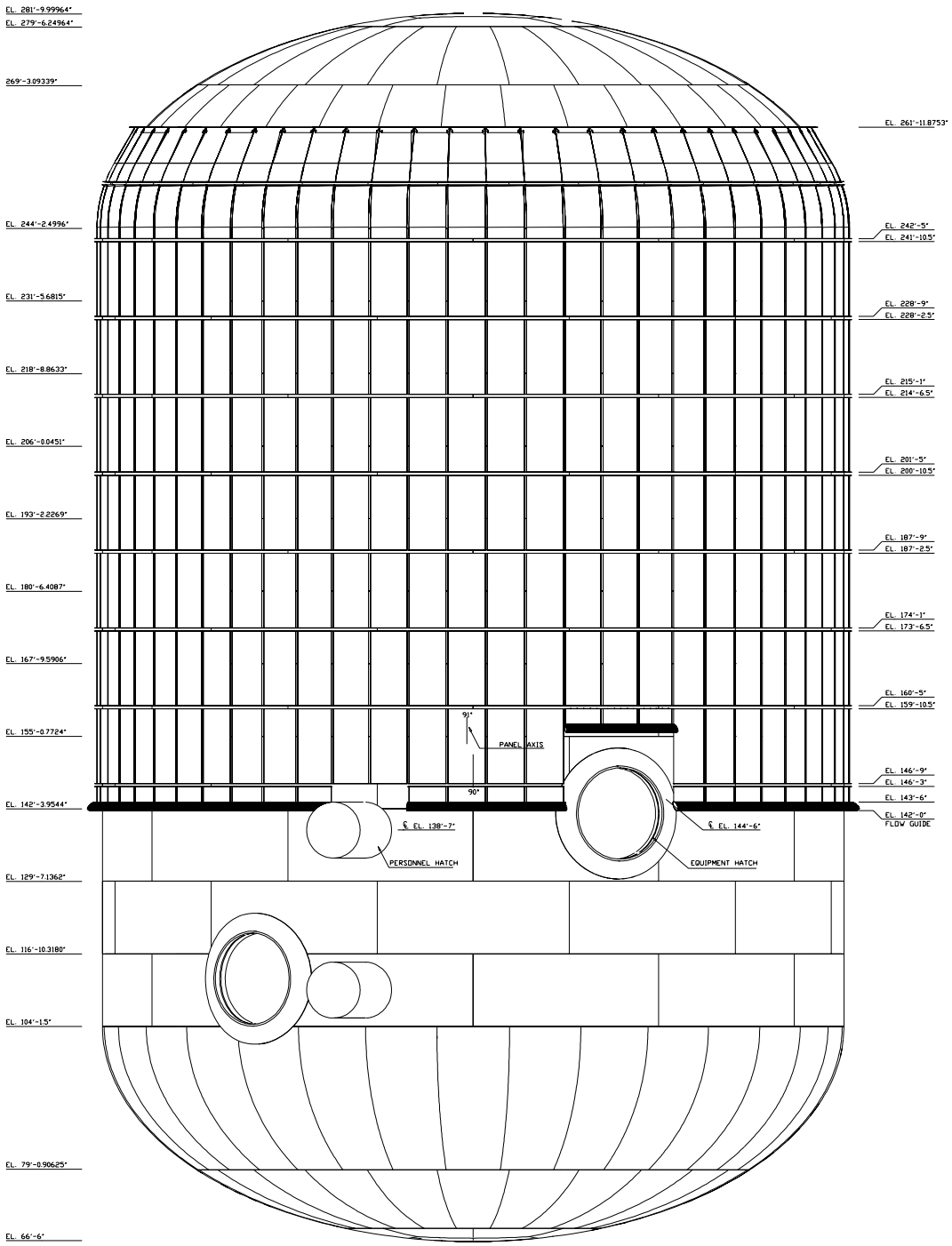

Figure 3.8.4-1 (Sheet 1 of 4)

Containment Air Baffle General Arrangement

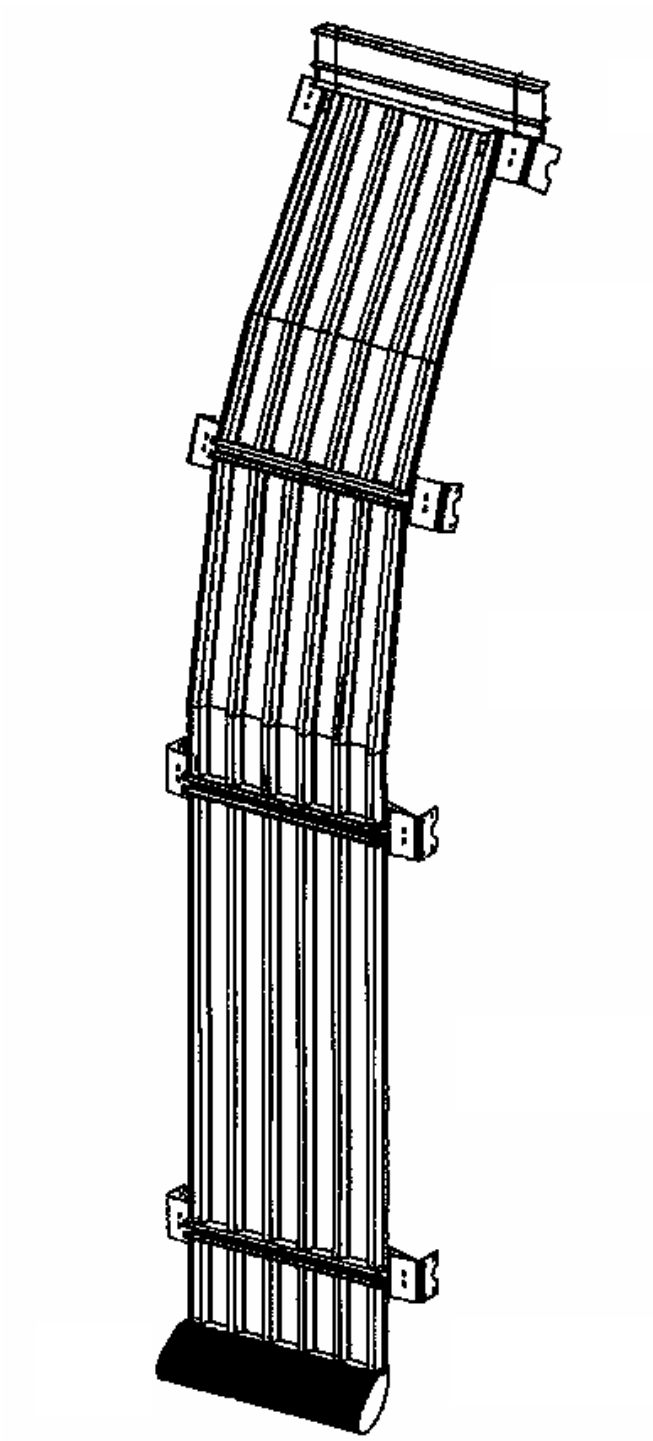

Figure 3.8.4-1 (Sheet 2 of 4)

Containment Air Baffle Panel Types

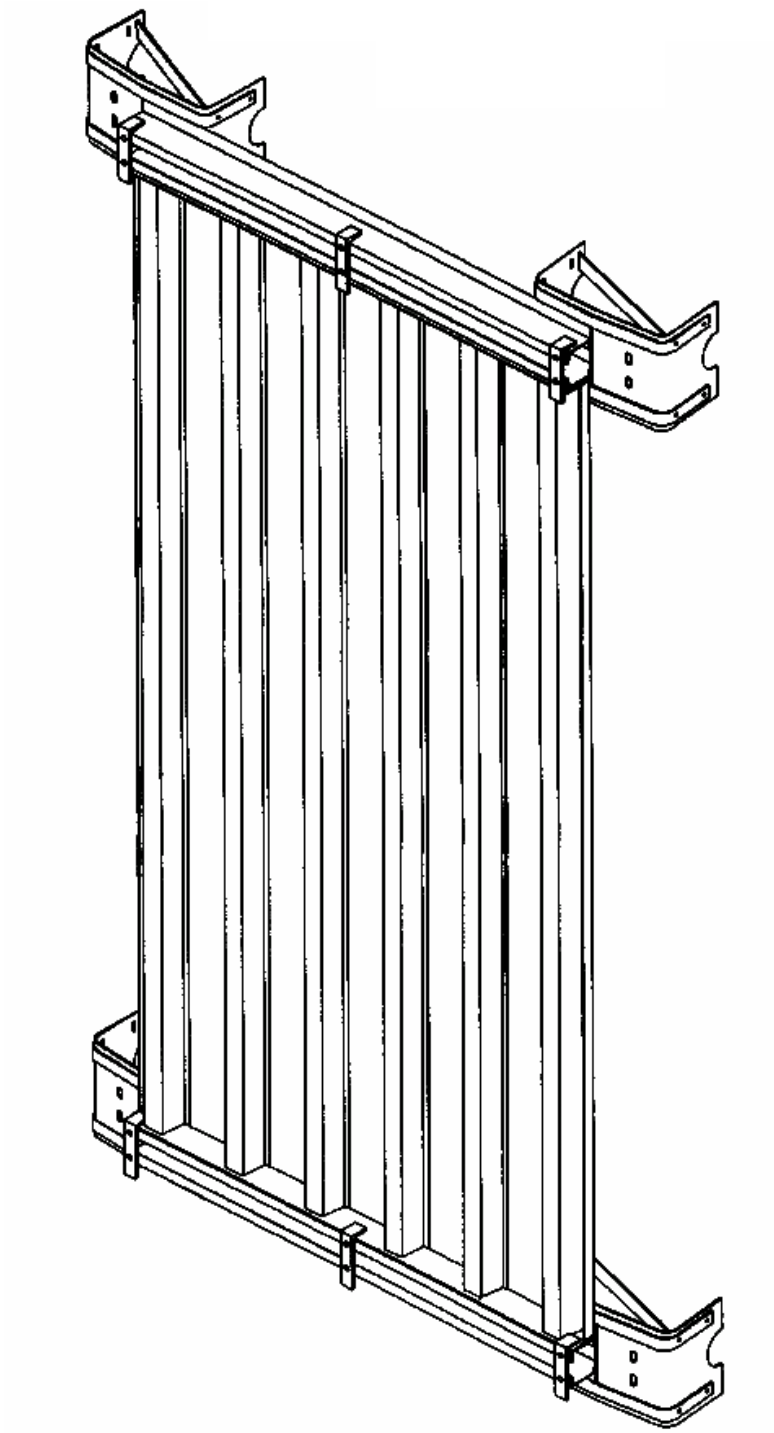

Figure 3.8.4-1 (Sheet 3 of 4)

Containment Air Baffle
Typical Panel on Cylinder

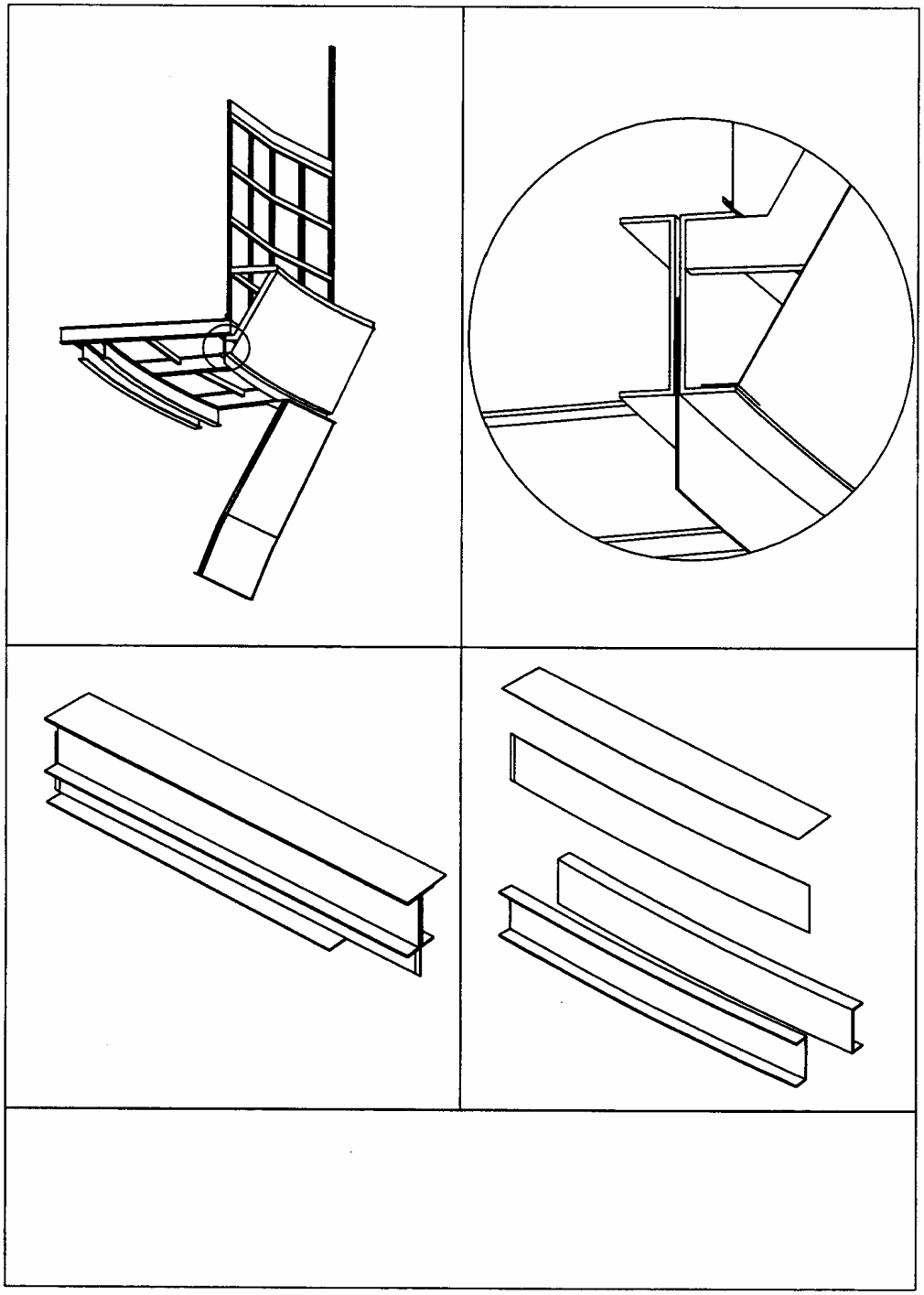

Figure 3.8.4-1 (Sheet 4 of 4)

Containment Air Baffle
Sliding Plate

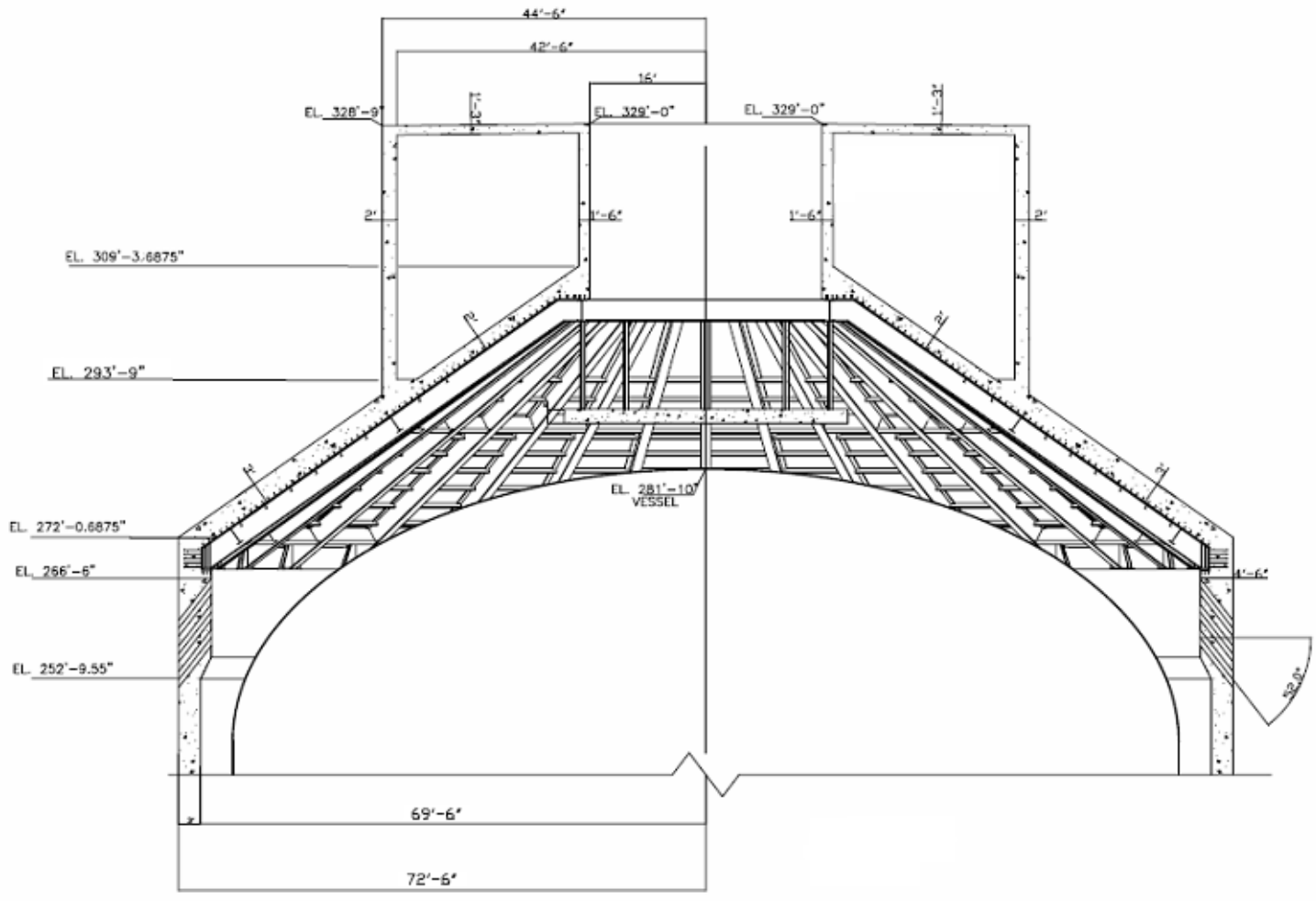

Figure 3.8.4-2

[*Passive Containment Cooling Tank*]*

*NRC Staff approval is required prior to implementing a change in this information; see DCD Introduction Section 3.5.

Figure 3.8.4-3 not used.

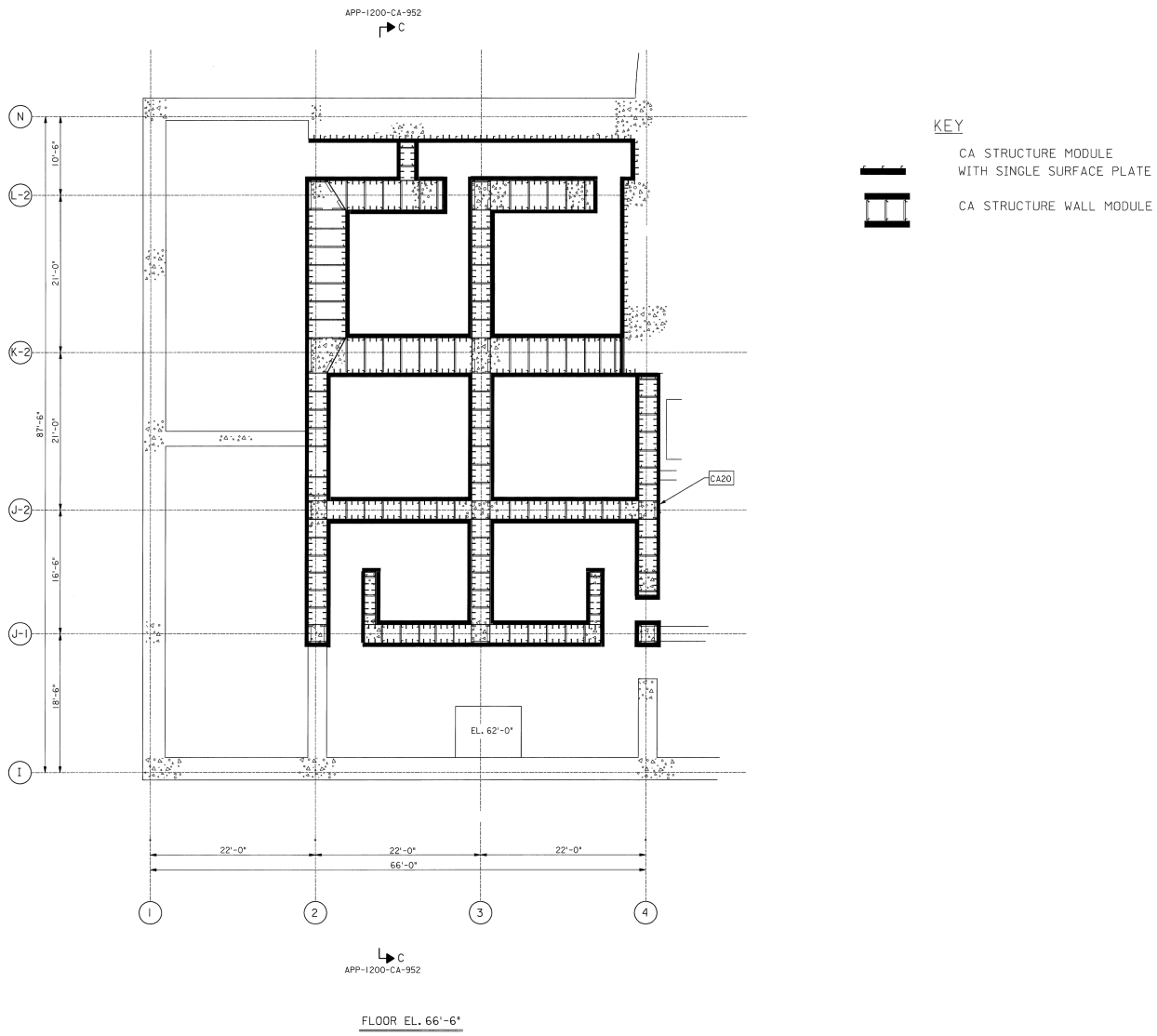

Figure 3.8.4-4 (Sheet 1 of 5)

[*Structural Modules in Auxiliary Building*]*

*NRC Staff approval is required prior to implementing a change in this information; see DCD Introduction Section 3.5.

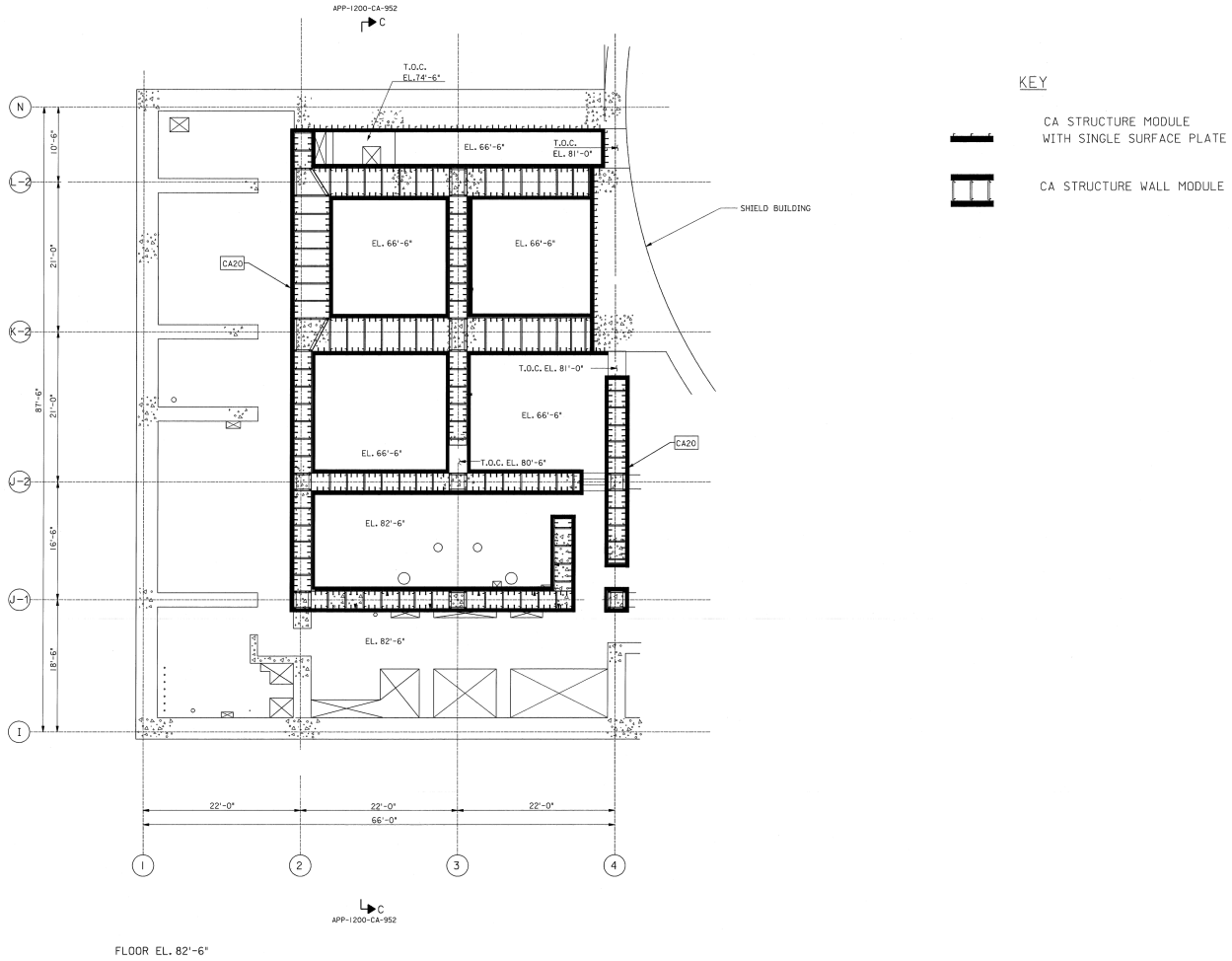

Figure 3.8.4-4 (Sheet 2 of 5)

[*Structural Modules in Auxiliary Building*]*

*NRC Staff approval is required prior to implementing a change in this information; see DCD Introduction Section 3.5.

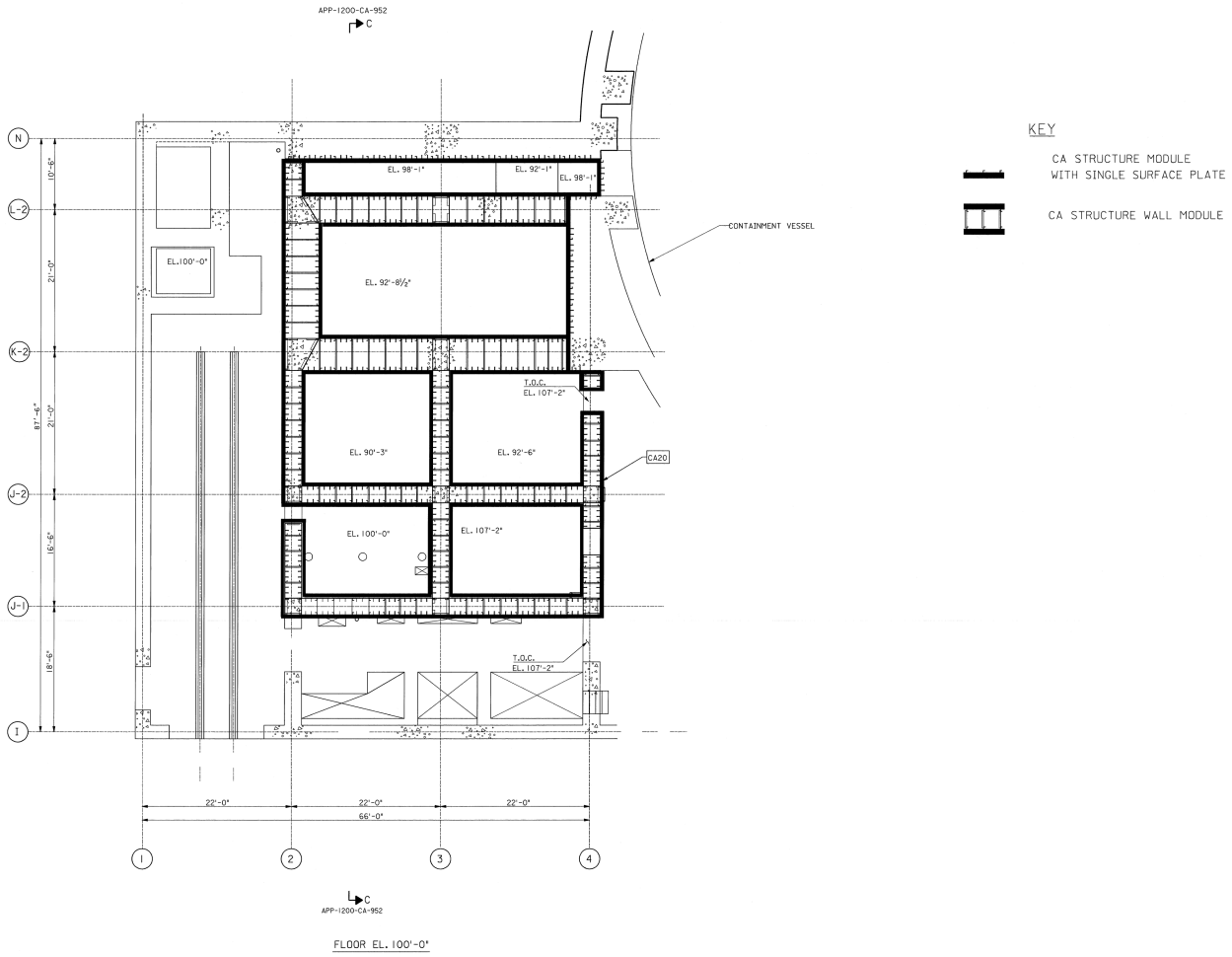

Figure 3.8.4-4 (Sheet 3 of 5)

[*Structural Modules in Auxiliary Building*]*

*NRC Staff approval is required prior to implementing a change in this information; see DCD Introduction Section 3.5.

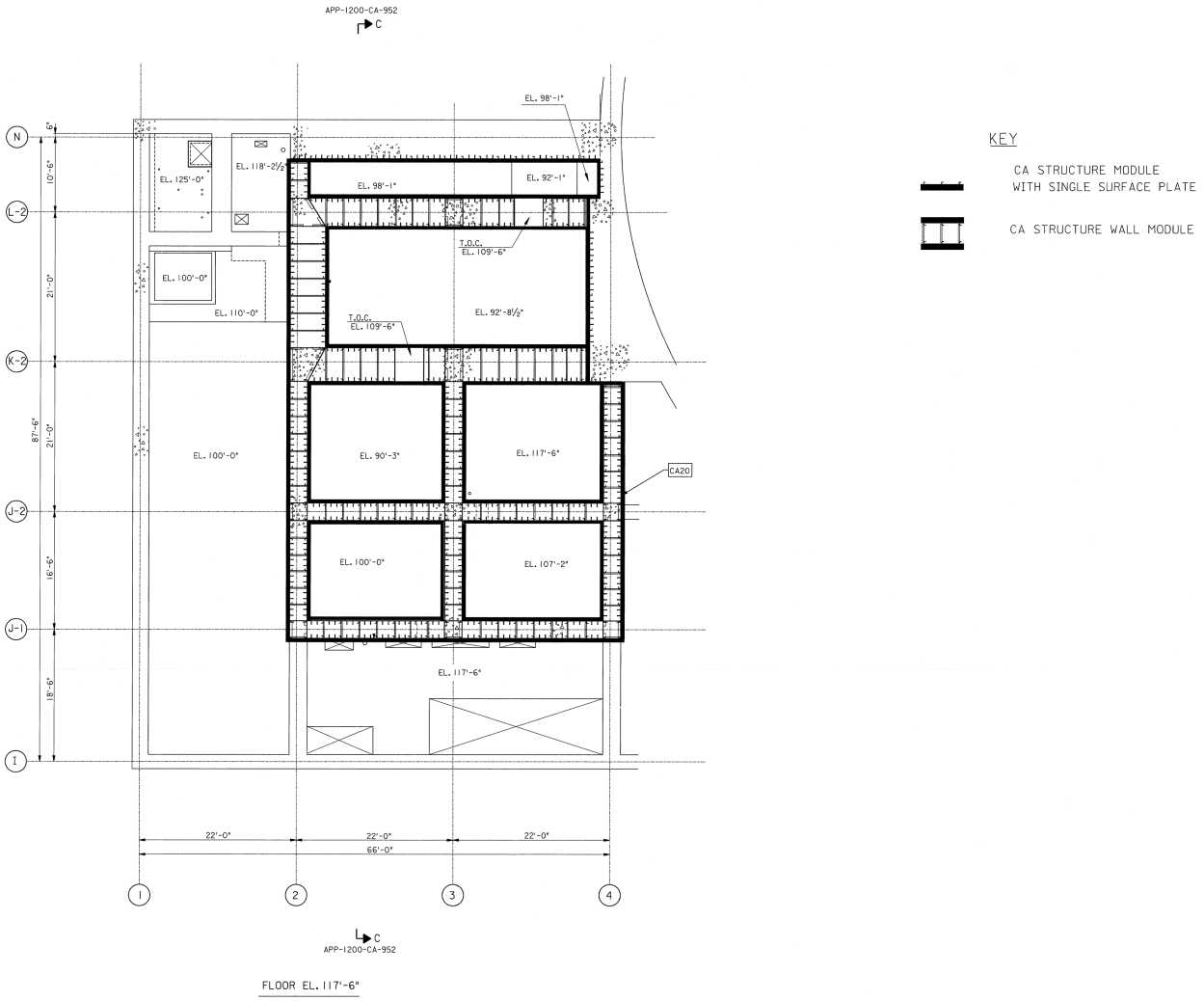

Figure 3.8.4-4 (Sheet 4 of 5)

[*Structural Modules in Auxiliary Building*]*

*NRC Staff approval is required prior to implementing a change in this information; see DCD Introduction Section 3.5.

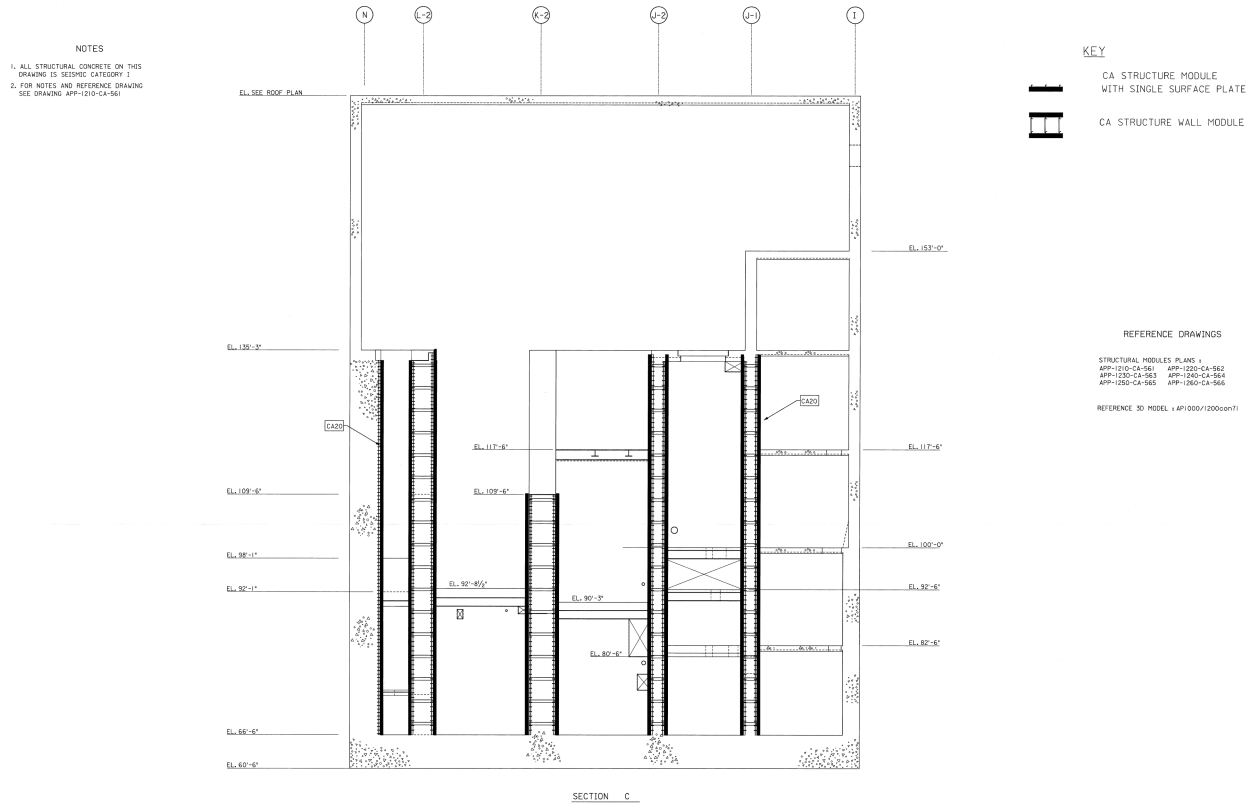

Figure 3.8.4-4 (Sheet 5 of 5)

[*Structural Modules in Auxiliary Building*]*

*NRC Staff approval is required prior to implementing a change in this information; see DCD Introduction Section 3.5.

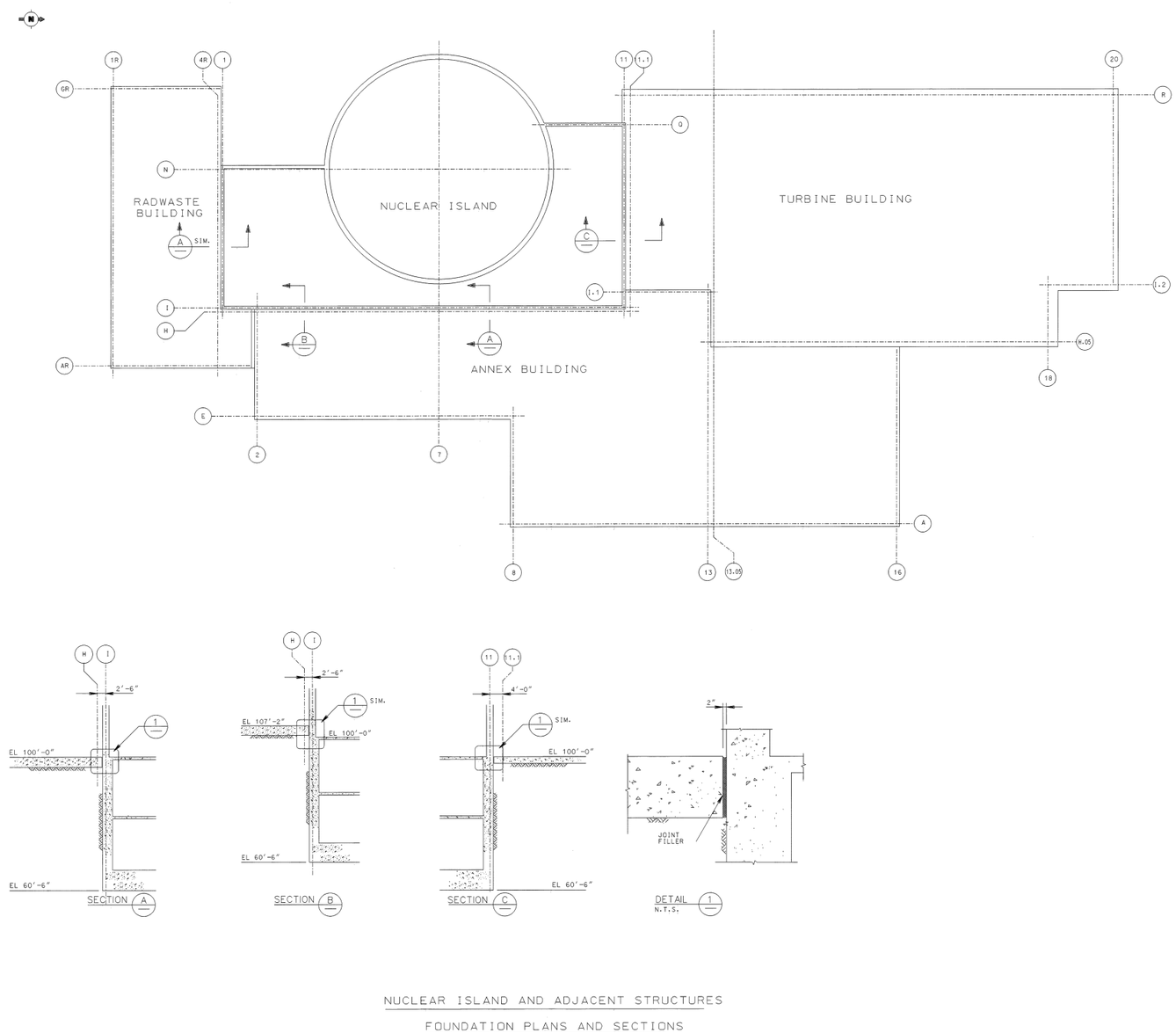

Figure 3.8.5-1

Foundation Plan

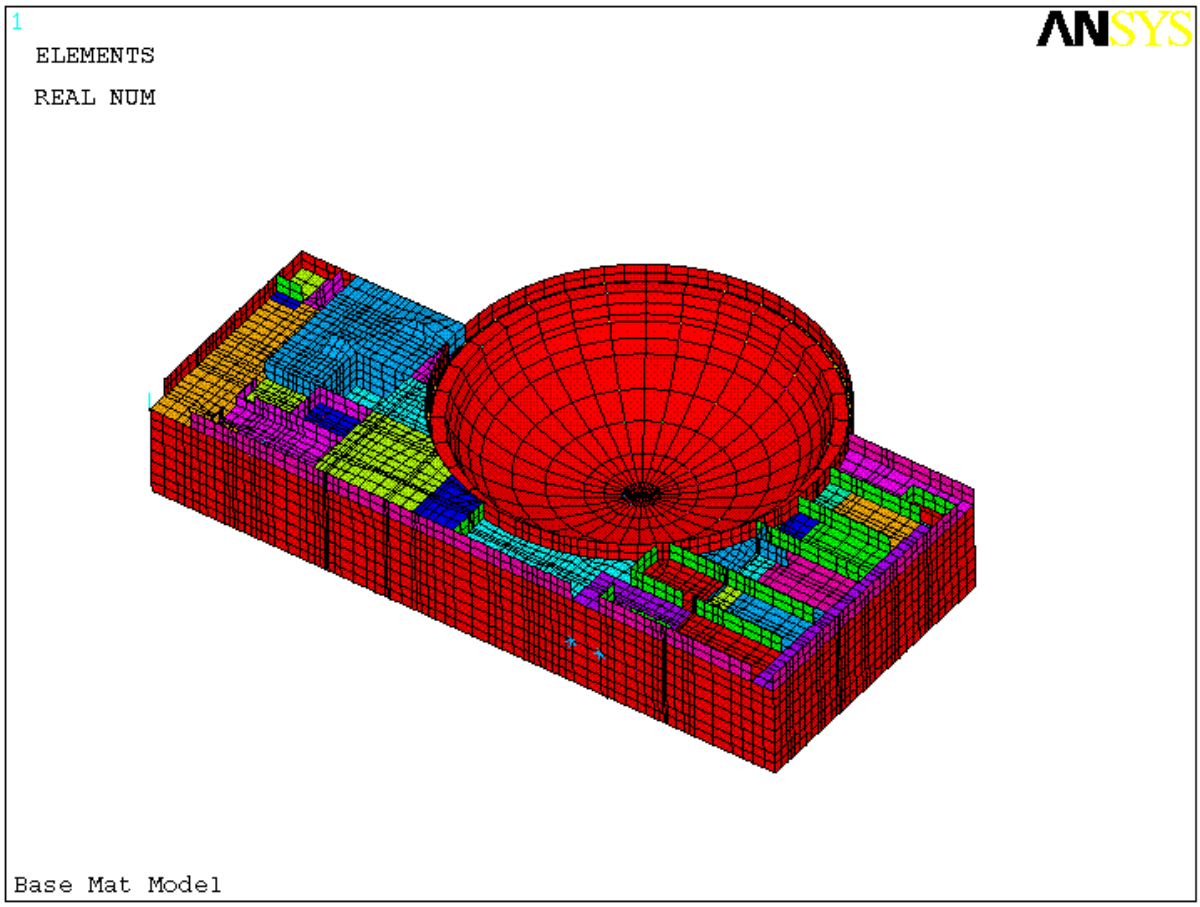

Figure 3.8.5-2

Isometric View of Finite Element Model

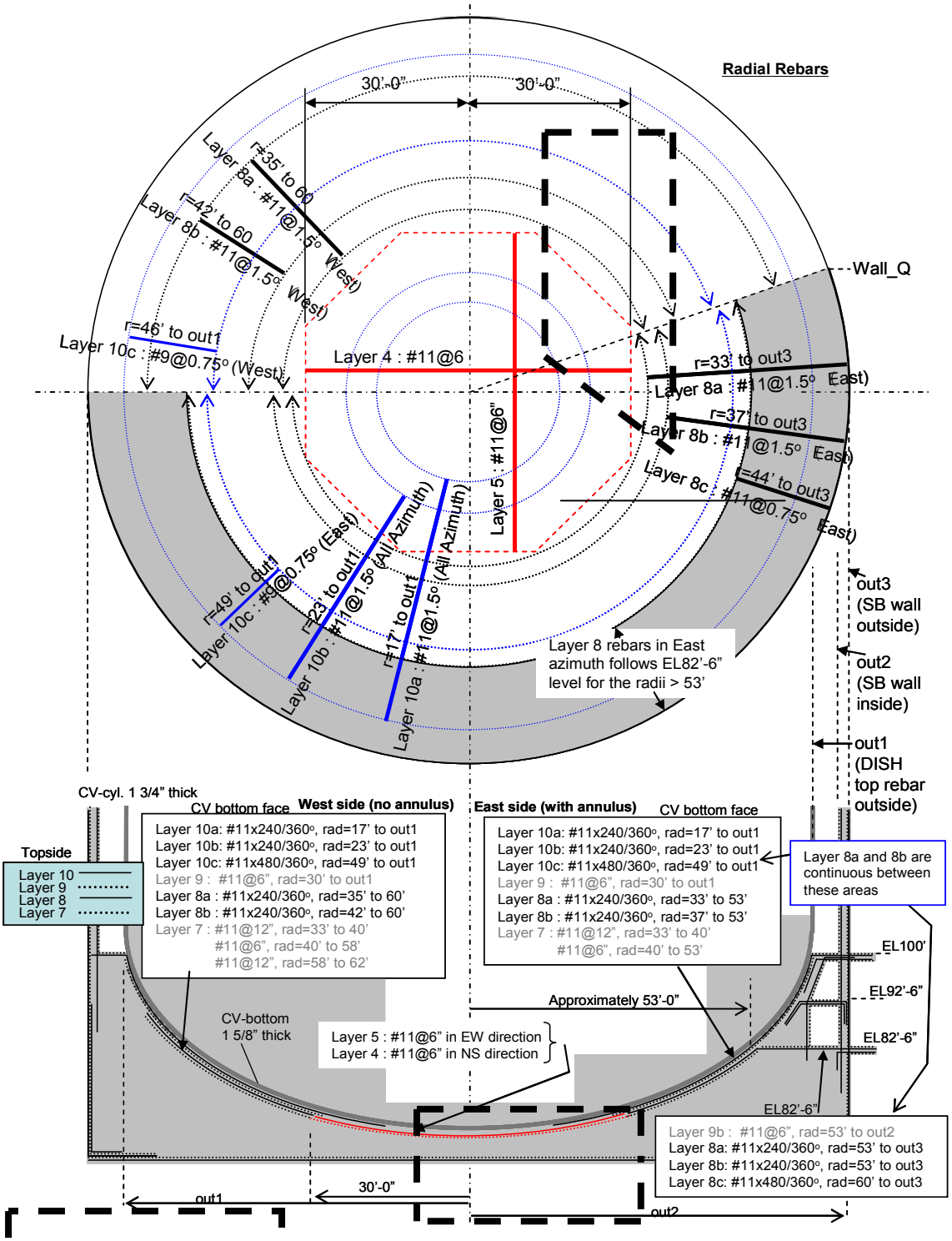

[*Reinforcement in these regions is given in Table 3.8.5-3*]*

Figure 3.8.5-3 (Sheet 1 of 7)

Radial Reinforcement, Top Side of DISH

*NRC Staff approval is required prior to implementing a change in this information; see DCD Introduction Section 3.5.

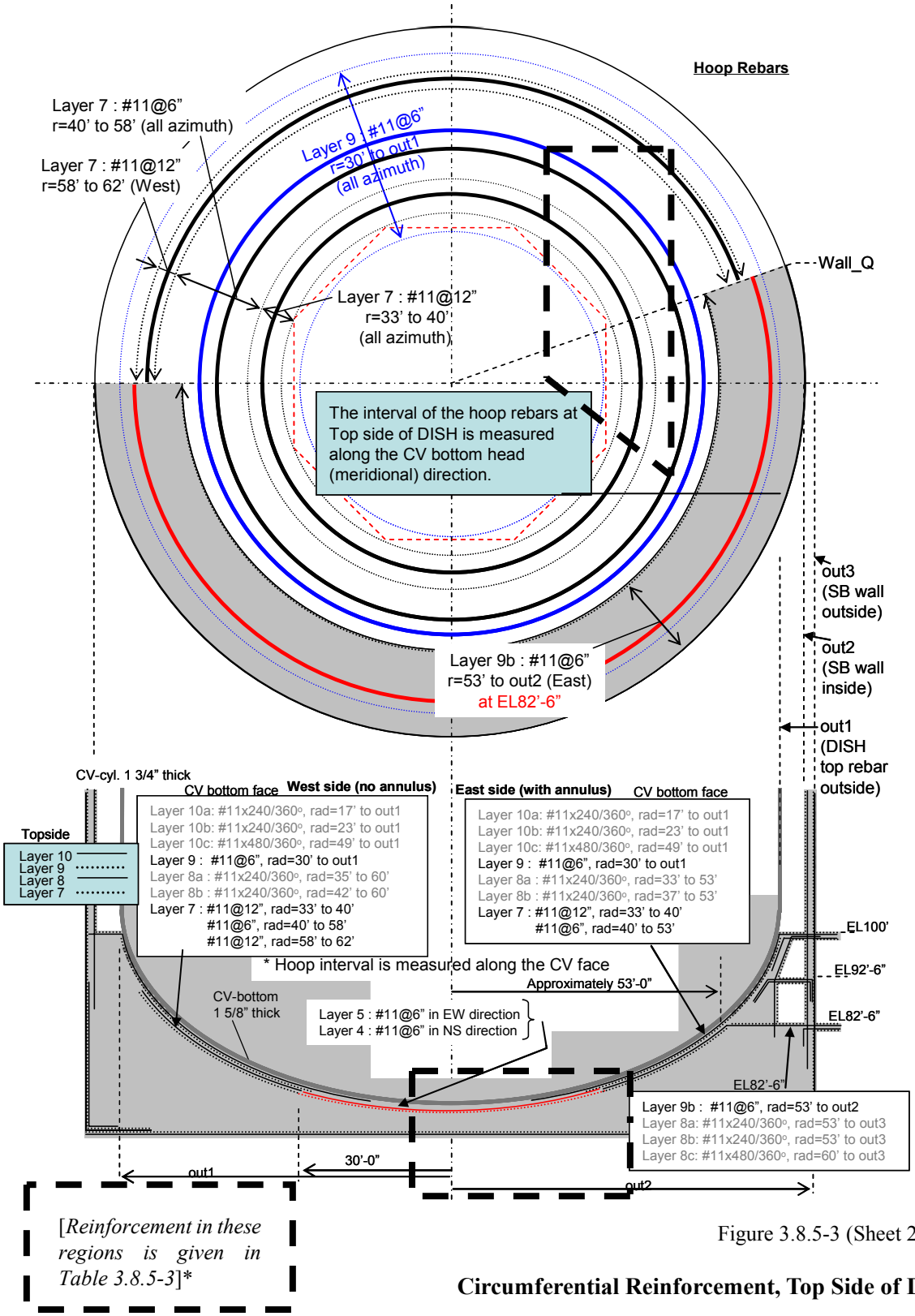

[*Reinforcement in these regions is given in Table 3.8.5-3*]*

Figure 3.8.5-3 (Sheet 2 of 7)

Circumferential Reinforcement, Top Side of DISH

*NRC Staff approval is required prior to implementing a change in this information; see DCD Introduction Section 3.5.

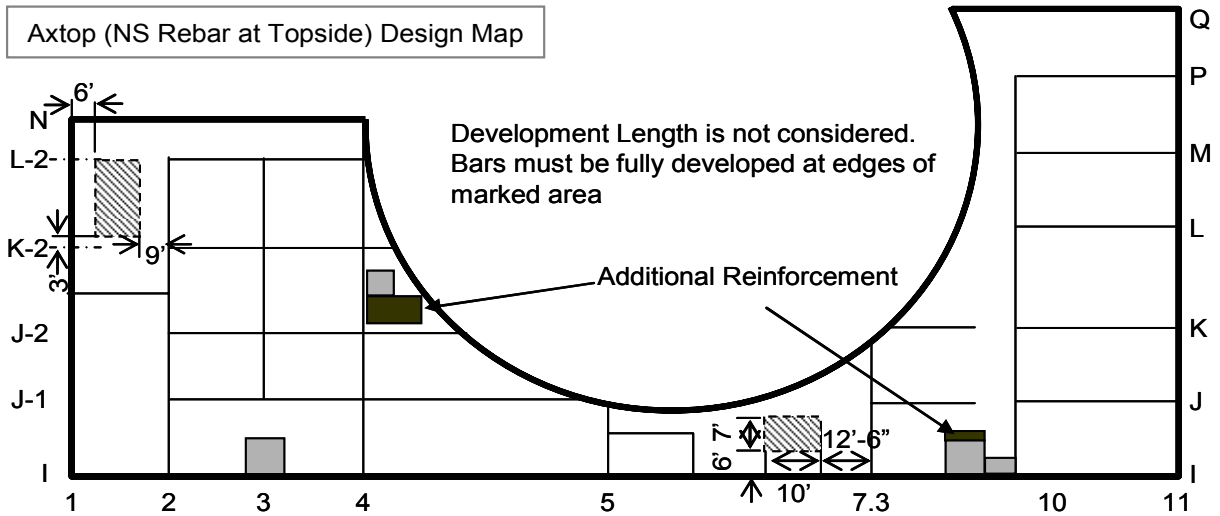

Rebar arrangement	: #14@12"	: #14@12"+#9@12"	: #11@12"
Location	Layer 4		Top side of the 1.5' & 3' thick Pits

Figure 3.8.5-3 (Sheet 3 of 7)

Longitudinal Reinforcement Map, Top Side in NS Direction

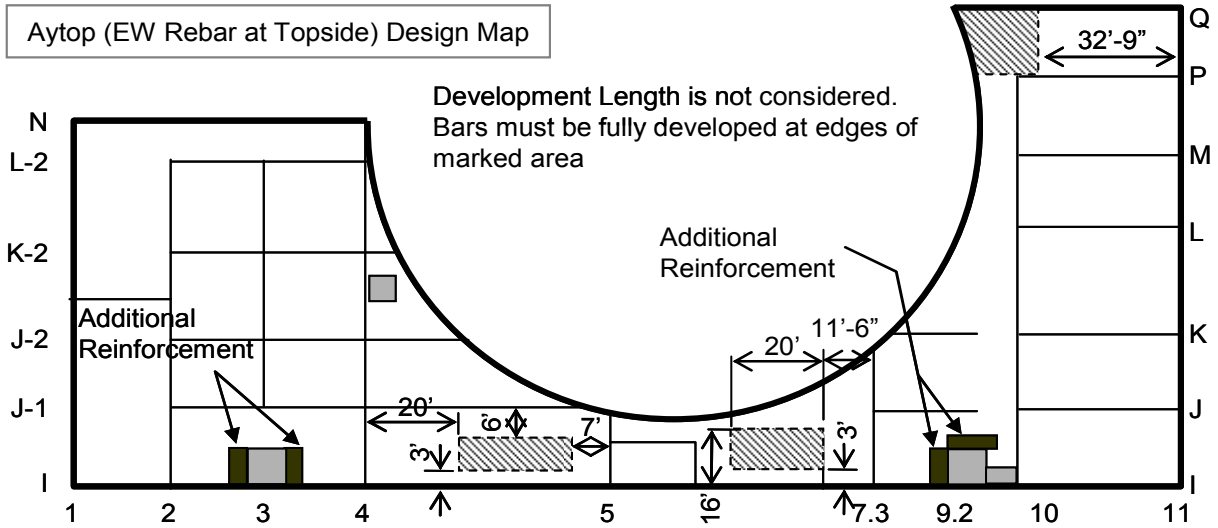

Rebar arrangement	: #14@12"	: #14@12"+#9@12"	: #11@12"
Location	Layer 5		Top side of the 1.5' & 3' thick Pits

Figure 3.8.5-3 (Sheet 4 of 7)

Longitudinal Reinforcement Map, Top Side in EW Direction

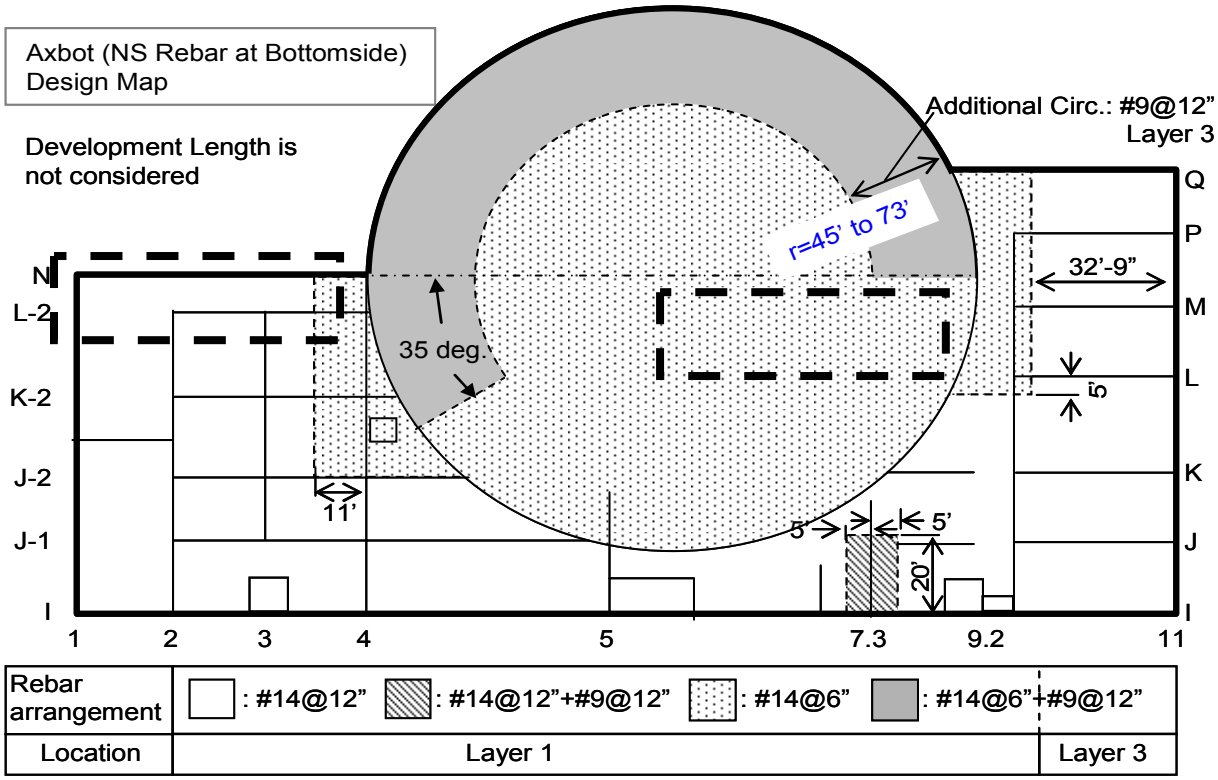

[*Reinforcement in these regions is given in Table 3.8.5-3*]*

Figure 3.8.5-3 (Sheet 5 of 7)

Longitudinal Reinforcement, Bottom Side of DISH and 6′ Basemat (NS)

*NRC Staff approval is required prior to implementing a change in this information; see DCD Introduction Section 3.5.

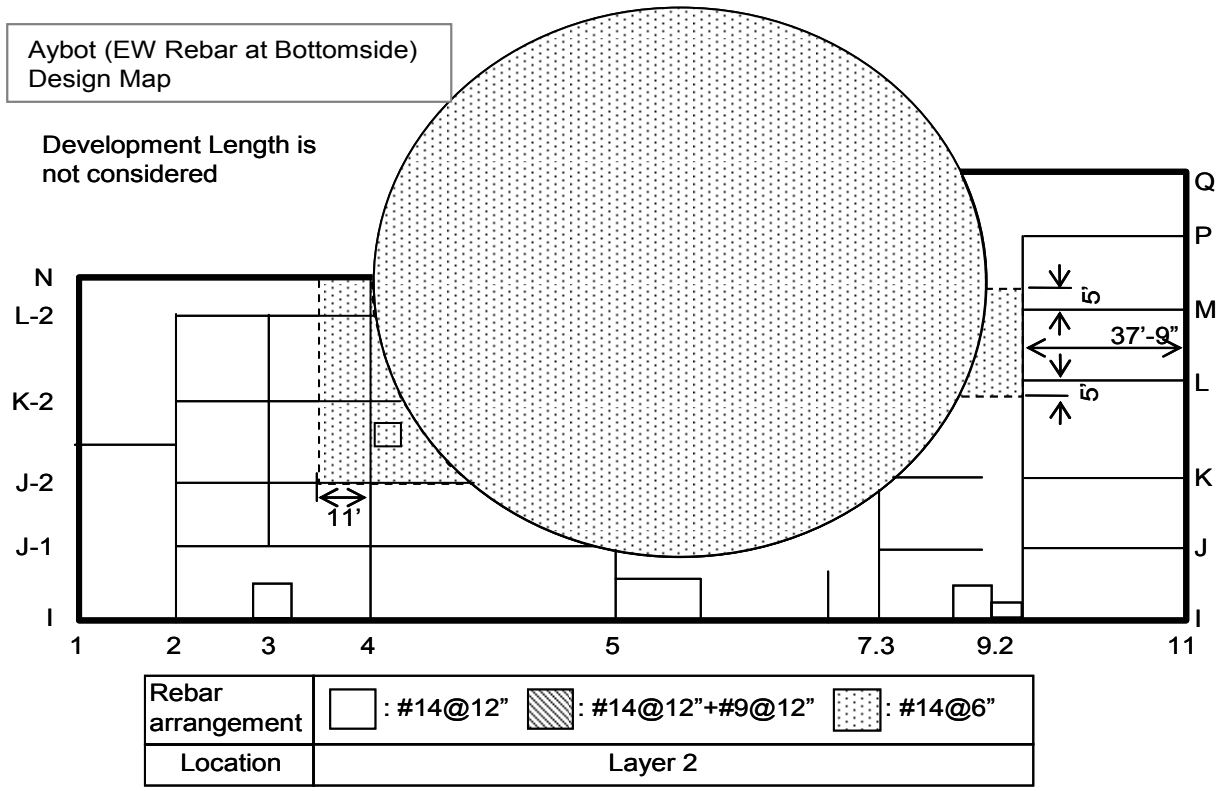

Figure 3.8.5-3 (Sheet 6 of 7)

Longitudinal Reinforcement, Bottom Side of DISH and 6′ Basemat (EW)

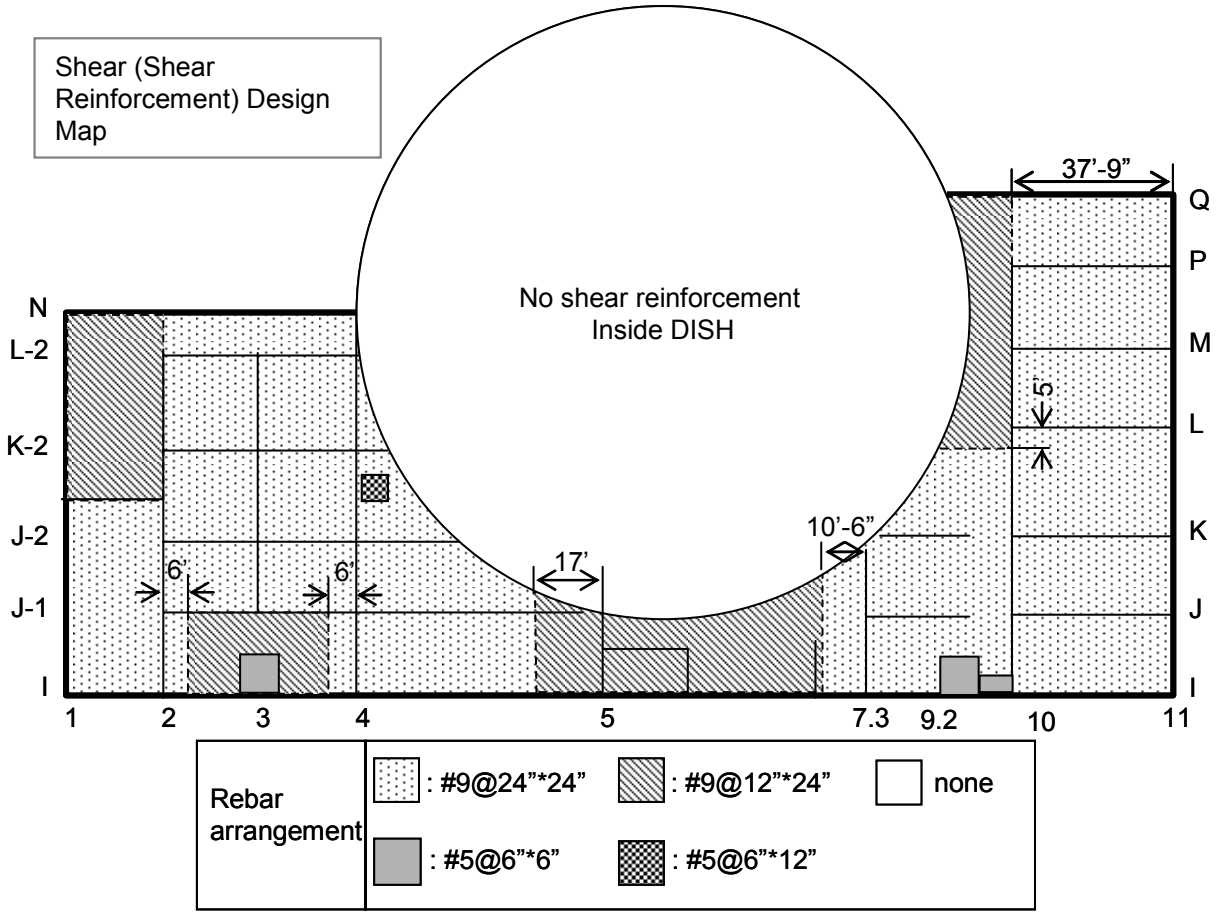

Figure 3.8.5-3 (Sheet 7 of 7)

Shear Reinforcement Map