CHAPTER 10

STEAM AND POWER CONVERSION

10.1 Summary Description

The steam and power conversion system is designed to remove heat energy from the reactor coolant system via the two steam generators and to convert it to electrical power in the turbine-generator. The main condenser deaerates the condensate and transfers heat that is unusable in the cycle to the circulating water system. The regenerative turbine cycle heats the feedwater, and the main feedwater system returns it to the steam generators.

Table 10.1-1 gives the significant design and performance data for the major system components. Figure 10.1-1 shows the rated heat balance for the turbine cycle process.

10.1.1 General Description

The steam generated in the two steam generators is supplied to the high-pressure turbine by the main steam system. After expansion through the high-pressure turbine, the steam passes through the two moisture separator/reheaters (MSRs) and is then admitted to the three low-pressure turbines. A portion of the steam is extracted from the high- and low-pressure turbines for seven stages of feedwater heating.

Exhaust steam from the low-pressure turbines is condensed and deaerated in the main condenser. The heat rejected in the main condenser is removed by the circulating water system (CWS). The condensate pumps take suction from the condenser hotwell and deliver the condensate through four stages of low-pressure closed feedwater heaters to the fifth stage, open deaerating heater. Condensate then flows to the suction of the steam generator feedwater booster pump and is discharged to the suction of the main feedwater pump. The steam generator feedwater pumps discharge the feedwater through two stages of high-pressure feedwater heating to the two steam generators.

The turbine-generator has an output of approximately 1,199,500 kW for the Westinghouse nuclear steam supply system (NSSS) thermal output of 3,415 MWt. The principal turbine-generator conditions for the turbine rating are listed in Table 10.1-1. The rated system conditions for the NSSS are listed in Table 10.1-1. The systems of the turbine cycle have been designed to meet the maximum expected turbine generator conditions.

Instrumentation systems are designed for the normal operating conditions of the steam and condensate systems. The systems are designed for safe and reliable control and incorporate requirements for performance calculations and periodic heat balances. Instrumentation for the secondary cycle is also provided to meet recommendations by the turbine supplier and ANSI/ASME TDP-2-1985, "Recommended Practices for the Prevention of Water Damage to Steam Turbines Used for Electric Power Generation." Design features for prevention of water hammer in the steam generator are described in subsection 5.4.2.2. Continuous sampling instrumentation and grab sample points are provided so that water chemistry in the secondary cycle can be maintained within acceptable limits, as required by the nuclear steam system and

turbine suppliers (see subsections 9.3.4 and 10.3.5). Condenser tube/tube sheet leakage can be identified and isolated by using condenser conductivity sampling provisions.

Criteria and bases for safety-related instrumentation for main steam isolation are discussed in Section 7.3.

10.1.2 Protective Features

Loss of External Electrical Load and/or Turbine Trip Protection

In the event of turbine trip, steam is bypassed to the condenser via the turbine bypass valves and, if required, to the atmosphere via the atmospheric relief valves. Steam relief permits energy removal from the reactor coolant system. Load rejection capability is discussed in subsections 10.3.2.3.1 and 15.2.2.

Overpressure Protection

Spring-loaded safety valves are provided on both main steam lines, in accordance with the ASME Code, Section III. The pressure relief capacity of the safety valves is such that the energy generated at the high-flux reactor trip setting can be dissipated through this system. The design capacity of the main steam safety valves equals or exceeds 105 percent of the NSSS design steam flow at an accumulation pressure not exceeding 110 percent of the main steam system design pressure. Overpressure protection for the main steam lines is a safety-related function. The main steam safety valves are described in subsection 10.3.2.

In addition, the shell sides of the feedwater heaters and the moisture separator/reheaters are provided with overpressure protection in accordance with ASME Code, Section VIII, Division 1, or equivalent standards.

Loss of Main Feedwater Flow Protection

The startup feedwater pumps provide feedwater to the steam generators for the removal of sensible and decay heat whenever main feedwater flow is interrupted, including loss of offsite electric power. This system is described in subsection 10.4.9.

Turbine Overspeed Protection

During normal operations, turbine overspeed protection is provided by the action of the redundant controller of the electro-hydraulic control system. Additional protection is provided by an overspeed protection system, which continuously monitors critical turbine parameters on a three-channel basis. Each of the channels is independently testable under load with overspeed protection during testing provided by the channels not being tested. If turbine speed exceeds 110 percent of rated speed, the electronic trip system causes steam supply valves to close, tripping the unit. This system is described in subsection 10.2.2.5.

Turbine Missile Protection

Turbine rotor integrity minimizes the probability of generating turbine missiles and is discussed in subsection 10.2.3. Turbine missiles are addressed in subsection 3.5.1.3. The favorable orientation of the turbine-generator directs potential missiles away from safety-related equipment and structures.

Radioactivity Protection

Under normal operating conditions, there are no significant radioactive contaminants present in the steam and power conversion system. However, it is possible for the system to become contaminated through steam generator tube leakage. In this event, radiological monitoring of the main condenser air removal system, the steam generator blowdown system, and the main steam lines will detect contamination and alarm high radioactivity concentrations. A discussion of the radiological aspects of primary-to-secondary system leakage and limiting conditions for operation is contained in Chapter 11. The steam generator blowdown system described in subsection 10.4.8 and the condensate polishing system described in subsection 10.4.6 serve to limit the radioactivity level in the secondary cycle.

Erosion-Corrosion Protection

Erosion-corrosion resistant materials are used in steam and power conversion systems for components exposed to single-phase or two-phase flow where significant erosion can occur. Factors considered in the evaluation of erosion-corrosion include system piping and component configuration and geometry, water chemistry, piping and component material, fluid temperature, and fluid velocity. Carbon steel with only carbon and manganese alloying agents is not used for applications subject to significant erosion-corrosion.

In addition to material selection, pipe size and layout may also be used to minimize the potential for erosion-corrosion in systems containing water or two-phase flow. The secondary side water chemistry (see subsection 10.3.5) uses a volatile pH adjustment chemical to maintain a noncorrosive environment. Steam and power conversion systems are designed to facilitate inspection and erosion-corrosion monitoring programs.

An industry-sponsored computer program developed for nuclear and fossil power plant applications is used to evaluate the rate of wall thinning for components and piping potentially susceptible to erosion-corrosion. The engineering models are the result of research and development in the fields of material science, water chemistry, fluid mechanics, and corrosion engineering. The program quantifies the benefits of piping material, system layout, and sizing considerations used to reduce corrosion rates.

10.1.3 Combined License Information on Erosion-Corrosion Monitoring

The Combined License holder will address preparation of an erosion-corrosion monitoring program for carbon steel portions of the steam and power conversion systems that contain water or wet steam. This monitoring program will address industry guidelines and the requirements included in Generic Letter 89-08.

Table 10.1-1

SIGNIFICANT DESIGN FEATURES AND PERFORMANCE CHARACTERISTICS FOR MAJOR STEAM AND POWER CONVERSION SYSTEM COMPONENTS

Nuclear Steam Supply System, Full Power Operation	
Rated NSSS power (MWt)	3415
Steam generator outlet pressure (psig)	823
Steam generator inlet feedwater temperature (°F)	440
Maximum steam generator separator outlet steam moisture (%)	0.25
Steam generator outlet steam temperature (°F)	523
Quantity of steam generators	2
Flow rate per steam generator (lb/hr)	7.49×10^6
Turbine	
Nominal output (kW)	1,199,500
Turbine type	Tandem-compound 6-flow, 52 in. last-stage blade
Turbine elements	1 high pressure 3 low pressure
Operating speed (rpm)	1800

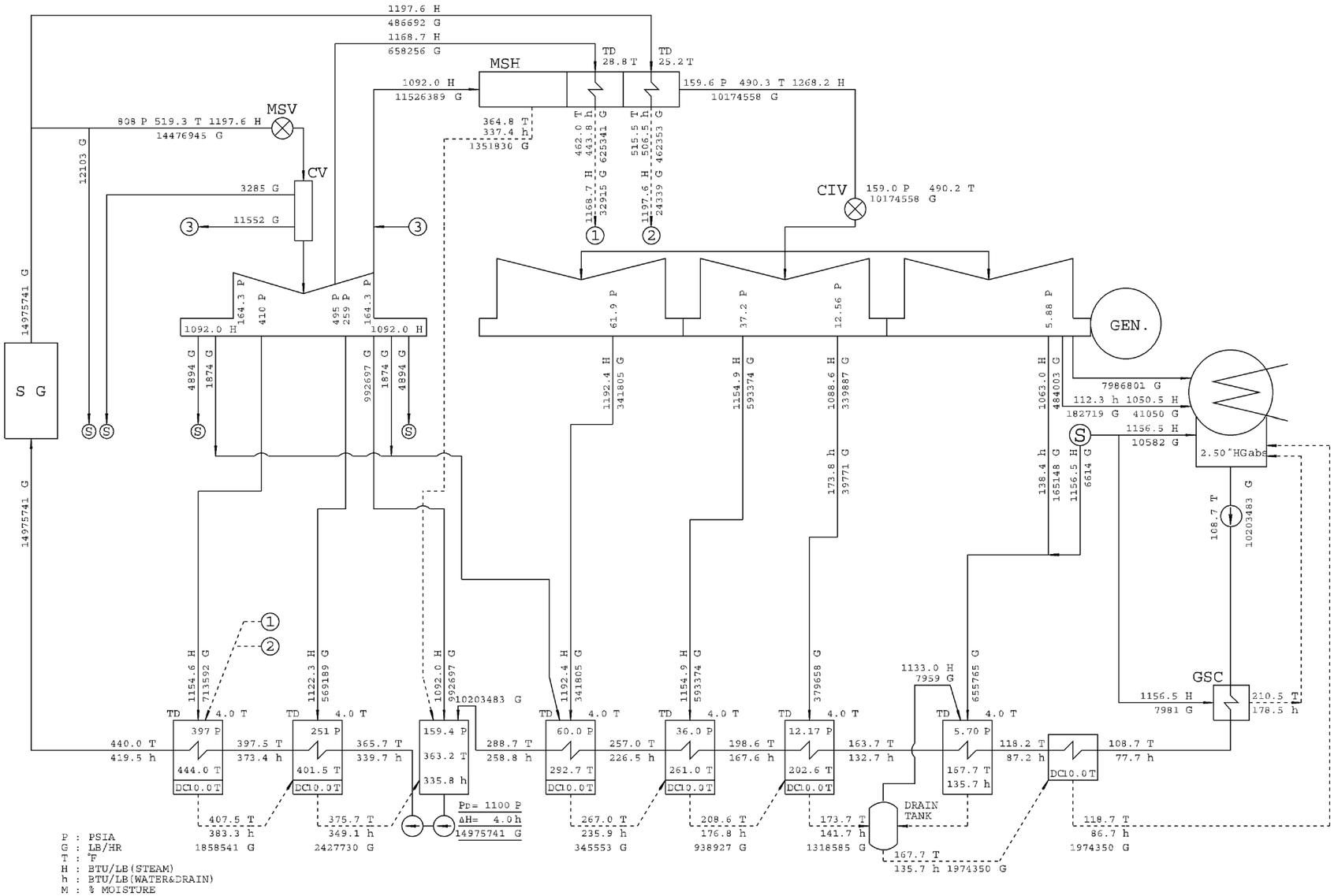

Figure 10.1-1

Rated Heat Balance