Duke Energy®
Carolinas

JAMES R. MORRIS, VICE PRESIDENT

Duke Energy Carolinas, LLC
Catawba Nuclear Station
4800 Concord Road / CN01VP
York, SC 29745

803-701-4251
803-701-3221 fax

November 6, 2008

U.S. Nuclear Regulatory Commission
Attention: Document Control Desk
Washington, D.C. 20555

Subject: Duke Energy Carolinas, LLC (Duke)
Catawba Nuclear Station, Unit 2
Docket Number 50-414
Request for Relief Number 08-CN-002
Reactor Vessel Hot Leg Nozzle-to-Safe End Weld Full Structural Weld Overlays (FSWOLs)

Pursuant to 10 CFR 50.55a(a)(3)(i), please find attached Request for Relief 08-CN-002. This request for alternative supports the application of FSWOLs to the subject Unit 2 reactor vessel nozzle welds. Four welds are scheduled to have FSWOLs applied during the Unit 2 Spring 2009 refueling outage.

Enclosure 1 contains the request for alternative. Enclosure 2 contains the regulatory commitments made in support of this request for alternative. Duke requests approval of this request for alternative by March 15, 2009.

If you have any questions concerning this material, please call L.J. Rudy at (803) 701-3084.

Very truly yours,

James R. Morris

James R. Morris

LJR/s

Enclosures

A047
NRR

xc (with enclosures):

L.A. Reyes, Regional Administrator
U.S. Nuclear Regulatory Commission, Region II
Atlanta Federal Center
61 Forsyth St., SW, Suite 23T85
Atlanta, GA 30303

A.T. Sabisch, Senior Resident Inspector
U.S. Nuclear Regulatory Commission
Catawba Nuclear Station

J.F. Stang, Jr., Senior Project Manager (addressee only)
U.S. Nuclear Regulatory Commission
Mail Stop 8-G9A
Washington, D.C. 20555-0001

bxc (with enclosures):

R.D. Hart
L.J. Rudy
D.L. Ward
D.H. Llewellyn
J.M. Shuping
N.I. Mohr
T.L. Bradley
K. Douthit
K.L. Ashe
RGC File
Document Control File 801.01
ELL-EC050
NCMPA-1
NCEMC
PMPA

Enclosure 1

Request for Relief 08-CN-002

Structural Integrity Associates, Inc.

12200 Herbert Wayne Court
Suite 100
Huntersville, NC 28078
Phone: 704-597-5554
Fax: 704-597-0335
www.structint.com
mlashley@structint.com

October 28, 2008
Report No. 0800147.405.R2
☒ Q ☐ Non-Q

Mr. Terry Bradley
Duke Energy
526 South Church Street
Charlotte, NC 28201

Subject: Inservice Inspection Relief Request for Use of Weld Overlays as an Alternative Repair Technique (Proposed Alternative in Accordance with 10 CFR 50.55a(a)(3)(i)), Catawba Nuclear Station, Unit 2

Reference:
1. Duke Energy Procurement Specification For CNS-2/MNS-1 RV Nozzle Alloy 82/182 Weld Mitigation, DPS-1201.01-00-0005 Rev 0.
2. Materials Reliability Program: Primary System Piping Butt Welds Inspection and Evaluation Guideline (MRP-139), EPRI, Palo Alto, CA: 2005. 10110087

Dear Mr. Bradley:

Introduction

A number of sources have documented that nickel-chromium-iron Alloy 600/82/182 materials are susceptible to Primary Water Stress Corrosion Cracking (PWSCC) in Pressurized Water Reactor (PWR) plant primary coolant systems. According to the referenced specification [1], Duke Energy plans to proactively mitigate locations on the Catawba Unit 2 Reactor Pressure Vessel hot leg nozzles containing Alloy 82/182 weldments by utilizing a Full Structural Weld Overlay (FSWOL) mitigation technique. This mitigation technique overlays the susceptible material with a more resistant material (Alloy 52/152M) and eliminates the existing susceptible weldment material tensile stress condition. The goal of this mitigation of PWSCC susceptible material is to resume normal ISI inspection intervals as soon as acceptable by MRP-139 [2] and ASME Code requirements. The mitigation applied must be adequate to prevent PWSCC through the current design life which includes the additional 20 year life extension approved for CNS-2.

Relief Request (Request for Alternative)

The relief request included as a part of this report as Enclosure 1 along with four attachments to Enclosure 1 is based on the design inputs provided by Duke Energy. The relief request includes the necessary descriptions and justifications to allow installation of a full structural weld overlay consistent with ASME draft Code Case N-740-2. Permission to perform NDE using the Performance Demonstration Initiative (PDI) modifications to ASME Section XI Appendix VIII, Supplement 11 is also requested.

Prepared by:

M. S. Lashley — 10/28/08 Date
Associate

11/3/08
~~Prepared~~ Reviewed by:

M. Taylor — 10/28/08 Date
Senior Associate

11/3/08
~~Verified and~~ Approved by:

M. S. Lashley — 10/28/08 Date
Associate

Enclosure

Enclosure 1

Proposed Alternative
In Accordance with 10 CFR 50.55a(a)(3)(i)
--Alternative Provides Acceptable Level of Quality and Safety--

Duke Energy Corporation
Catawba Nuclear Station Unit 2
Relief Request 08-CN-002

REFERENCE CODE: The American Society of Mechanical Engineers Boiler and Pressure Vessel Code (ASME), Section XI, 1998 Edition through 2000 Addenda.

1.0 ASME Code Components Affected

The ASME Code components associated with this request are high safety significant Class 1 dissimilar metal welds (DMW) with Alloy 82/182 weld metal that are believed to be susceptible to Primary Water Stress Corrosion Cracking (PWSCC). There are four reactor vessel hot leg nozzle-to-safe end welds that will receive full structural weld overlay (FSWOL) repairs during the upcoming Catawba Nuclear Station – Unit 2 (CNS2) EOC 16 (Spring 2009) outage.

1.1 Category and System Details:

Code Class: Class 1
System Welds: Reactor Coolant System
Examination Categories:
- Category B-F for dissimilar metal welds to reactor vessel nozzle
- Category B-J for stainless steel safe end to pipe welds

Code Item Numbers:
- B 5.10 for dissimilar metal welds to reactor vessel nozzle
- B 9.11 for stainless steel safe end to pipe welds

1.2 Component Descriptions:

This alternative is to apply a FSWOL on the four reactor vessel hot leg nozzle-to-safe end welds. The applicable items and descriptions are:

Catawba Unit 2	Description	Size	DM Weld Number	SS Weld Number	Comment
NC Pipe	Hot leg safe-end to RV Nozzle-A Loop	Nominal 29"ID with 2 5/8" wall	**2RPV202-121ASE**	**2NC9-01**	LAS nozzle/Alloy 82-182 weld/SS safe end
NC Pipe	Hot leg safe-end to RV Nozzle-B Loop	Nominal 29"ID with 2 5/8" wall	**2RPV202-121BSE**	**2NC11-01**	LAS nozzle/Alloy 82-182 weld/SS safe end
NC Pipe	Hot leg safe-end to RV Nozzle-C Loop	Nominal 29"ID with 2 5/8" wall	**2RPV202-121CSE**	**2NC13-01**	LAS nozzle/Alloy 82-182 weld/SS safe end
NC Pipe	Hot leg safe-end to RV Nozzle-D Loop	Nominal 29"ID with 2 5/8" wall	**2RPV202-121DSE**	**2NC15-01**	LAS nozzle/Alloy 82-182 weld/SS safe end

1.3 Component Materials:

1. LAS nozzles are SA-508 Class 2 Low Alloy Steel (P-3).
2. SS safe ends are SA-182 Type 316 austenitic stainless steel (P-8).
3. Welds are Alloy 82/182 (F-43).

2.0 Applicable Code Edition and Addenda

Catawba Nuclear Station – Unit 2 (CNS2) is currently in the third 10-year Inservice Inspection (ISI) interval. The American Society of Mechanical Engineers (ASME) Boiler and Pressure Vessel Code (Code) of record for the current 10-year ISI interval is Section XI, 1998 Edition through 2000 Addenda (Reference 1). This is also the edition used for the Repair/Replacement Program.

3.0 Applicable Code Requirement

ASME Boiler and Pressure Vessel Code, Section XI, 1998 Edition through 2000 Addenda, Article IWA-4000, "Repair/Replacement Activities"

ASME Boiler and Pressure Vessel Code, Section XI, 1998 Edition through 2000 Addenda, Appendix VIII, Supplement 10, "Qualification Requirements for Dissimilar Metal Piping Welds"; and Supplement 2. "Qualification Requirements for Wrought Austenitic Piping Welds"

ASME Boiler and Pressure Vessel Code, Section III, 1974 Edition, no Addenda for Catawba Unit 2 Class 1 piping

ASME Boiler and Pressure Vessel Code, Section III, 1971 Edition through Summer 1971 Addenda for Catawba Unit 2 Reactor Vessel design and fabrication

ASME Boiler and Pressure Vessel Code, Section III, 1989 Edition No Addenda – Duke Welding Program for all units at all sites

4.0 Reason for Request

Primary Water Stress Corrosion Cracking (PWSCC) has been identified as a degradation mechanism for Alloy 82/182 welds and weld buttering. While no PWSCC flaws have been detected in the reactor vessel hot leg nozzle-to-safe end welds at CNS2, Duke proposes to perform pre-emptive mitigation for the upcoming EOC 16 (Spring 2009) outage. Duke has concluded that the application of a FSWOL over the reactor vessel hot leg nozzle-to-safe end welds is the most appropriate course of action to ensure the integrity of the reactor coolant pressure boundary.

ASME Code Section XI, 1998 Edition through 2000 Addenda does not provide rules for the design of weld overlays or for repairs without removal of flaws. In addition, Code Case N-504-3, which has been approved by the NRC for use, does not provide the methodology for overlaying nickel alloy welds joining austenitic and ferritic base materials. Therefore, Duke proposes the following alternative.

5.0 Proposed Alternative

Catawba Nuclear Station – Unit 2 (CNS2) proposes a FSWOL for the welds identified in Section 1.0 of this request using Alloy 52M weld metal. References to Alloy 52M weld metal in this relief request are intended to apply to use of Alloy 52M or Alloy 152 weld metal. Each FSWOL will extend around the full circumference of the existing nozzle Alloy 82/182 weld, overlapping the neighboring sections of low alloy steel nozzle and stainless steel safe end. Due to the proximity of the adjacent similar metal piping welds, the overlays will extend over the adjacent stainless steel safe end-to-piping welds, as necessary to provide sufficient overlay length for inspectability and residual stress improvement. A FSWOL configuration typical of the one to be applied is shown in Figure 1.

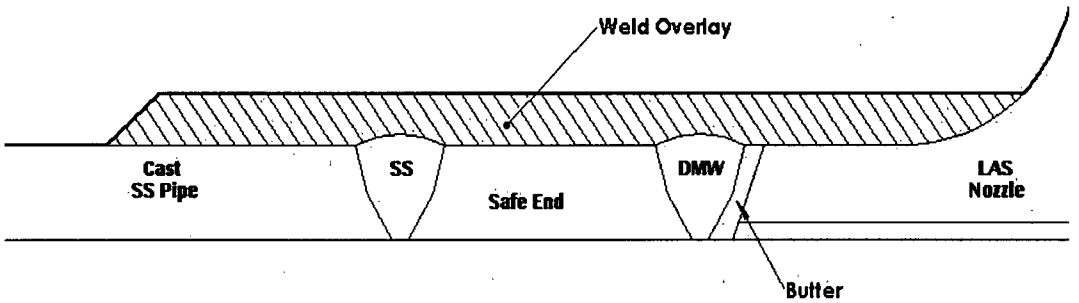

Notes:

1. Cast SS Pipe is SA-351 CF 8A (P-8).
2. Safe end is SA-182 Type 316 (P-8).
3. LAS Nozzle is SA-508 Class 2 (P-3).
4. Final design dimensions of overlay are as follows:
   a. Overall length will be approximately 14" (includes a minimum of 1.978" on nozzle side of DMW and 2.731" on piping side of safe end-to-piping weld plus width of both welds and safe end).
   b. Minimum thickness will be 0.875" over DMW and 0.837" over adjacent stainless steel safe end-to-piping weld.
   c. Maximum thickness will not exceed 1.35".

Figure 1. Schematic Configuration for Hot Leg Weld Overlay for Catawba Unit 2

The design of the overlay will be based on the applicable rules of ASME Section XI and ASME draft Code Case N-740-2 (Reference 4). The rules to be used for design and implementation are summarized in Attachments 1 and 2. For ease of reference, a comparison of the requirements of previously approved Code Case N-504-3 to the proposed method is given in Attachment 3.

6.0 Basis for Use

Weld overlays assure structural integrity because they provide a redundant pressure boundary and increased PWSCC resistance by creating low tensile or compressive residual stresses at the inner surface of the original weld. The PWSCC resistance is also increased by the use of weld overlay material resistant to PWSCC (e.g., Alloy 52M). The weld overlay is of sufficient thickness and length to meet the applicable stress limits from ASME Section III, NB-3200. Crack growth evaluations for PWSCC and fatigue of any as-found flaws or any conservatively postulated flaws will ensure that structural integrity will be maintained.

As part of the design of the weld overlay, the weld length, surface finish, and flatness are specified in order to allow qualified ASME Section XI, Appendix VIII UT examinations, as implemented through the EPRI Performance Demonstration Initiative (PDI) Program, of the weld overlay and the required volume of the base material and original weld. The examinations specified in this proposed alternative will provide improved assurance of structural integrity. Further, if no flaws are found in the outer 25% of the original wall thickness by the pre-service UT examinations, the postulated 75% through-wall flaw for the preemptive overlays is conservative for crack growth evaluations. If a flaw is detected in the upper 25% of the original material during the pre-service examination, the actual flaw size would be used for the crack growth evaluations.

The implementation of the alternative reduces the likelihood for PWSCC in the identified weld and improves piping geometries to permit Appendix VIII UT examinations as implemented through the PDI program. Weld overlay repairs of dissimilar metal welds have been installed and performed successfully for many years in both PWR and BWR applications. The alternative provides improved structural integrity and reduced likelihood of leakage for the primary system. Accordingly, the use of the alternative provides an acceptable level of quality and safety in accordance with 10 CFR 50.55a(a)(3)(i).

A full-structural Alloy 52M overlay will be applied to the dissimilar metal Alloy 82/182 welds identified in Section 1.0. In lieu of using the existing IWA-4000 Repair Procedures in Reference 1, Duke proposes to use the alternative requirements for design, fabrication, pressure testing, and examination of weld overlay repairs enumerated in Attachments 1 and 2. This will provide an acceptable methodology for preventing future PWSCC and for reducing any defect observed in these welds to acceptable size by increasing the wall thickness through deposition of the weld overlay. The use of weld overlay filler metals that are resistant to PWSCC (e.g., Alloy 52M), weld overlay procedures that create compressive residual stress profiles at the inner surface of the original weld, and post overlay preservice and inservice inspection requirements provide assurance that structural integrity will be maintained for the life of the plant. The weld overlay will also meet the applicable stress limits from ASME Section III, NB-3200. Crack growth evaluations for PWSCC and fatigue of any as-found (or conservatively postulated) flaw will demonstrate that structural integrity will be maintained.

A. <u>Weld Overlay Design and Verification</u>

The fundamental design basis for FSWOLs is to maintain the original safety margins for primary loading, with no credit taken for the underlying PWSCC susceptible weldments. The assumed, design basis flaw for the purpose of structural sizing of the overlay is 360 degrees and 100% through the original wall thickness of the DMWs. The overlay sizing calculations and implementation design drawings have been prepared to support application of any overlays that are addressed in this relief request.

Following is a list of the specific analyses and verifications that will be performed for the application of overlays that are installed in accordance with the requirements of this relief request.

1. Nozzle specific stress analyses will be performed to establish a residual stress profile in the nozzle. Severe ID weld repairs will be assumed in these analyses that effectively bound any actual weld repairs that may have occurred in the nozzles. The analysis will then simulate application of the weld overlay to determine the final residual stress profile. Post weld overlay residual stresses at normal operating conditions will be shown to result in beneficial compressive stresses on the inside surface of the components, assuring that further crack initiation due to PWSCC is highly unlikely. The design requirements are as outlined in Attachment 1.

2. Fracture mechanics analyses will also be performed to predict crack growth, based on cracks that are equal to or greater than the detected flaw sizes. Crack growth will be evaluated due to PWSCC as well as due to fatigue crack growth in the original DMW. The crack growth analyses will consider all design loads and transients, plus the post weld overlay, through-wall residual stress distributions, and will demonstrate that the detected cracks will not grow beyond the design basis for the weld overlays (i.e. through the original DMW thickness) for the time period until the next scheduled inservice inspection.

3. The analyses will demonstrate that application of the weld overlays does not impact the conclusions of the existing nozzle Stress Reports. ASME Code, Section III stress and fatigue criteria will be met for regions of the overlay remote from observed (or assumed) cracks.

4. Shrinkage will be measured during the overlay application. Shrinkage stresses at other susceptible locations in the piping systems arising from the weld overlay will be demonstrated not to have an adverse effect on the systems. Clearances of affected supports and restraints will be checked after the overlay repair, and will be reset within the design ranges as required.

5. The total added weight on the piping systems due to the overlays will be evaluated for potential impact on piping system stresses and dynamic characteristics.

6. The as-built dimensions of the weld overlays will be measured and evaluated to demonstrate that they are equal to or exceed the minimum design dimensions of the overlays.

B. Suitability of Proposed NDE

As a part of the design of the weld overlay, the weld length, surface finish, and flatness are specified to allow qualified ASME Section XI, Appendix VIII UT examinations, as implemented through the EPRI Performance Demonstration Initiative (PDI) Program, of the weld overlay and the required volume of the base material and original weld (Attachment 1, Figures A1-1 and A1-2). The examinations specified in this proposed alternative will provide adequate assurance of structural integrity for the following reasons:

- The UT examinations to be performed with the proposed alternative are in accordance with ASME XI, Appendix VIII, Supplement 11, as implemented through the PDI. PDI modifications are detailed in Attachment 4. These examinations are considered more sensitive for detection of defects, either from fabrication or service induced, than either ASME Section III RT or UT methods. Further, construction flaws have been included in the PDI qualification sample sets for evaluating procedures and personnel.

- Section XI has developed specific acceptance criteria and evaluation methodology to be utilized with the results from these more sensitive examinations. They consider the materials in which the flaw indications are detected, the orientation and size of the indications, and ultimately their potential structural effects on the component. The acceptance criteria include allowable flaw indication tables for planar flaws (Table IWB-3514-2) and for laminar flaws (Table IWB-3514-3).

- A laminar flaw is defined in Section XI as a flaw oriented within 10 degrees of a plane parallel to the surface of the component. This definition is applicable to welds and weld overlays as well as base materials. The standard imposed for evaluating laminar flaws in Section XI is more restrictive than the Section III standard for evaluating laminations. The Section XI laminar flaw standards, Table IWB-3514-3, are supplemented in Attachment 1 such that the total laminar flaw shall not exceed 10% of the weld overlay surface area and no linear dimension of the laminar flaw shall exceed 3 in. For weld overlay areas where examination is precluded by the presence of the flaw, it is required to postulate the area as being cracked.

- Any planar flaws found during either the weld overlay acceptance or pre-service examinations are required to meet the pre-service standards of Table IWB-3514-2. In applying the planar flaw standards, the thickness of the component will be defined as the thickness of the weld overlay.

- The NRC staff has conditionally approved Code Case N-504-3 for weld overlays and the required NDE with the imposition of the requirements contained in ASME Section XI 2005 Addenda, Appendix Q. The NDE discussed above and detailed in

Attachment 1 meet the approved rules. This is consistent with recent NRC approvals for application of FSWOLs.

- Weld overlays for repair of cracks in piping are not addressed by ASME Section III. ASME Section III utilizes nondestructive examination procedures and techniques with flaw detection capabilities that are within the practical limits of workmanship standards for welds. These standards are most applicable to volumetric examinations conducted by radiographic examination. Radiography (RT) of weld overlays is not practical because of presence of radioactive material in the Reactor Coolant system and water in the pipes. The Section III acceptance standards are written for a range of fabrication flaws including lack of fusion, incomplete penetration, cracking, slag inclusions, porosity, and concavity. However, experience and fracture mechanics have demonstrated that many of the flaws that would be rejected using ASME Section III acceptance standards do not have a significant effect on the structural integrity of the component.

- The Section XI acceptance standards are the logical choice for evaluation of potential flaw indications in post-overlay examinations, in which unnecessary repairs to the overlay would result in additional personnel radiation exposure without a compensating increase in safety and quality, and could potentially degrade the effectiveness of the overlay by affecting the favorable residual stress field that they produce. They are consistent with previous criteria approved by the NRC for weld overlay installations. Weld overlays have been used for repair and mitigation of cracking in Boiling Water Reactors for many years. In Generic Letter 88-01, the NRC approved the use of Section XI inspection procedures for determining the acceptability of installed weld overlays. The NRC staff found the use of the Section XI, Appendix VIII, Supplement 11 acceptable for identifying both construction and service induced flaws in the SER for DC Cook Plant dated February 19, 2006 and tacitly approved the associated Section XI acceptance criteria, Tables IWB-3514-2 and IWB-3514-3. The staff also accepted the use of Section XI acceptance standards in an SER dated July 21, 2004 for the TMI Plant, for disposition of flaws identified in a weld overlay by PDI qualified UT examinations, with additional restrictions similar to those proposed herein for regions in which inspection is precluded by the flaws.

C. Suitability of Proposed Ambient Temperature Temper Bead Technique

The overlay addressed by this Relief Request will be performed using ambient temperature temper bead welding in lieu of Post Weld Heat Treatment, in accordance with Attachment 2. Research by the Electric Power Research Institute (EPRI) and other organizations on the use of an ambient temperature temper bead process using the machine Gas Tungsten Arc Welding (GTAW) process is documented in EPRI Report GC-111050 (Reference 3). According to the EPRI report, repair welds performed with an ambient temperature temper bead procedure utilizing the machine GTAW welding process exhibit mechanical properties equivalent to or better than those of the surrounding base material. Laboratory testing, analysis, successful procedure qualifications, and successful repairs have all demonstrated the effectiveness of this process.

The effects of the ambient temperature temper bead welding process of Attachment 2 on mechanical properties of repair welds, hydrogen cracking, cold restraint cracking, and extent of overlay coverage of ferritic base metal are addressed in the following paragraphs:

Mechanical Properties

The principal reasons to preheat a component prior to repair welding is to minimize the potential for cold cracking. The two cold cracking mechanisms are hydrogen cracking and restraint cracking. Both of these mechanisms occur at ambient temperature. Preheating slows down the cooling rate resulting in a ductile, less brittle microstructure thereby lowering susceptibility to cold cracking. Preheat also increases the diffusion rate of monatomic hydrogen that may have been trapped in the weld during solidification. As an alternative to preheat, the ambient temperature temper bead welding process utilizes the tempering action of the welding procedure to produce tough and ductile microstructures. Because precision bead placement and heat input control are utilized in the machine GTAW process, effective tempering of weld heat affected zones is possible without the application of preheat. According to Section 2-1 of EPRI Report GC 111050, "the temper bead process is carefully designed and controlled such that successive weld beads supply the appropriate quantity of heat to the untempered heat affected zone such that the desired degree of carbide precipitation (tempering) is achieved. The resulting microstructure is very tough and ductile."

The IWA-4630 temper bead process also includes a postweld soak requirement. Performed at 300°F for 4 hours (P-No. 3 base materials), this postweld soak assists diffusion of any remaining hydrogen from the repair weld. As such, the postweld soak is a hydrogen bake-out and not a postweld heat treatment as defined by the ASME Code. At 300°F, the postweld soak does not stress relieve, temper, or alter the mechanical properties of the weldment in any manner.

The alternative in Attachment 2 establishes detailed welding procedure qualification requirements for base materials, filler metals, restraint, impact properties, and other procedure variables. The qualification requirements provide assurance that the mechanical properties of repair welds will be equivalent to or superior to those of the surrounding base material.

Hydrogen Cracking

Hydrogen cracking is a form of cold cracking. It is produced by the action of internal tensile stresses acting on low toughness heat affected zones. The internal stresses are produced from localized build-ups of monatomic hydrogen. Monatomic hydrogen forms when moisture or hydrocarbons interact with the welding arc and molten weld pool. The monatomic hydrogen can be entrapped during weld solidification and tends to migrate to transformation boundaries or other microstructure defect locations. As concentrations build, the monatomic hydrogen will recombine to form molecular hydrogen – thus generating localized internal stresses at these internal defect locations. If these stresses exceed the fracture toughness of the material, hydrogen induced cracking will occur. This form of cracking requires the presence of hydrogen and low toughness materials. It is manifested by intergranular cracking of susceptible materials and normally occurs within 48 hours of welding.

IWA-4630 establishes elevated preheat and postweld soak requirements. The elevated preheat temperature of 300°F increases the diffusion rate of hydrogen from the weld. The postweld soak at 300°F was also established to bake-out or facilitate diffusion of any remaining hydrogen from the weldment. However, while hydrogen cracking is a concern for Shielded Metal Arc Welding (SMAW), which uses flux covered electrodes, the potential for hydrogen cracking is significantly reduced when using the machine GTAW process.

The machine GTAW process is inherently free of hydrogen. Unlike the SMAW process, GTAW filler metals do not rely on flux coverings that may be susceptible to moisture absorption from the environment. Conversely, the GTAW process utilizes dry inert shielding gases that cover the molten weld pool from oxidizing atmospheres. Any moisture on the surface of the component being welded will be vaporized ahead of the welding torch. The vapor is prevented from being mixed with the molten weld pool by the inert shielding gas that blows the vapor away before it can be mixed. Furthermore, modern filler metal manufacturers produce wires having very low residual hydrogen. This is important because filler metals and base materials are the most realistic sources of hydrogen for the automatic or machine GTAW temper bead process. Therefore, the potential for hydrogen-induced cracking is greatly reduced by using the machine GTAW process. Extensive research has been performed by EPRI (Reference 5) which provides a technical basis for starting the 48-hour hold after completing the third temper bead weld layer rather than waiting for the weld overlay to cool to ambient temperature. This

approach has been previously reviewed and approved by the NRC for pressurizer and hot leg surge nozzle overlays.

Cold Restraint Cracking

Cold cracking generally occurs during cooling at temperatures approaching ambient temperature. As stresses build under a high degree of restraint, cracking may occur at defect locations. Brittle microstructures with low ductility are subject to cold restraint cracking. However, the ambient temperature temper bead process is designed to provide a sufficient heat inventory so as to produce the desired tempering for high toughness. Because the machine GTAW temper bead process provides precision bead placement and control of heat, the toughness and ductility of the heat affected zone will typically be superior to the base material. Therefore, the resulting structure will be appropriately tempered to exhibit toughness sufficient to resist cold cracking.

Area Limitation

IWA-4630 and early versions of Code Case N-638 through Revision 2 for temper bead welding contained a limit of 100 square inches for the surface area of temper bead weld over the ferritic base metal. The associated limitation proposed in Attachment 1 is 500 square inches, consistent with draft Code Case N-740-2.

An ASME white paper (Reference 2) describes the technical justification for allowing increased overlay areas up to 500 square inches. The white paper notes that the original limit of 100 square inches in Code Case N-638-1 was arbitrary. It cites evaluations of a 12 inch diameter nozzle weld overlay to demonstrate adequate tempering of the weld heat affected zone (Section 2a of the white paper), residual stress evaluations demonstrating acceptable residual stresses in weld overlays ranging from 100 to 500 square inches (Section 2b of the white paper), and service history in which weld repairs exceeding 100 square inches were NRC approved and applied to DMW nozzles in several BWRs and PWRs (Section 3c of the white paper). Some of the cited repairs are greater than 15 years old, and have been inspected several times with no evidence of any continued degradation.

It is important to note that the above theoretical arguments and empirical data have been verified in practice by extensive field experience with temper bead weld overlays, with ferritic material coverage ranging from less than 10 square inches up to and including 325 square inches. Table 1 below provides a partial list of such applications. It is seen from this table that the original DMW weld overlay was applied over 20 years ago, and WOLs with low alloy steel (LAS) coverage in the 100 square inch range have been in service for 5 to 15 years. Several overlays have been applied with LAS coverage significantly greater than the 100 square inches. Relief requests for these large overlays have been previously approved. These overlays have been examined with PDI qualified techniques, in some cases multiple times, and none have shown any signs of new cracking or growth of existing cracks.

7.0 Duration of Proposed Alternative

This proposed alternative is for application as needed during the remainder of the current Catawba Nuclear Station – Unit 2 (CNS2) third inspection interval which ends August 19, 2016. The proposed alternative, once installed, will remain in place for the remaining service life of the affected components.

8.0 Implementation

The FSWOL will be installed during the Catawba Nuclear Station – Unit 2 (CNS2) EOC 16 (Spring 2009) outage. NRC approval is requested by 03/14/2009, to support scheduling for completion of activities during the outage.

9.0 Precedents

Similar requests have been submitted to address the issues that are contained in this request. The technical approach and basis for the proposed alternative in this request is very similar to the request from Duke Energy Corporation's McGuire Nuclear Station Unit 1 and Catawba Nuclear Station Unit 2 for application of FSWOLs to their pressurizer nozzle DMWs in letter titled "Duke Power Company LLC d/b/a Duke Energy Carolinas, LLC, (Duke) McGuire Nuclear Station, Unit 1 Docket Number 50-369 Catawba Nuclear Station, Unit 2 Docket Number 50-414 Relief Request 07-GO-001" (ADAMS Accession Number ML070310367), dated January 24, 2007. This relief request was approved by the NRC through the NRC Letter to Duke, Catawba Nuclear Station, Unit 2, and McGuire Nuclear Station, Unit 1, Relief 07-GO-001 for Use of Preemptive Weld Overlay and Alternative Examination Techniques on Safe End Welds (TAC Nos. MD4671 and MD4672), November 27, 2007

Similar relief requests were also previously submitted by Progress Energy's Crystal River Nuclear Plant, South Carolina Electric and Gas's Virgil C. Summer Station, and by Entergy for Arkansas Nuclear One. These requests were approved by the NRC through the NRC Letter to Progress Energy's Crystal River Nuclear Plant, Unit 3, Relief Request #08-001-RR, Revision 1, to Install a Weld Overlay on the Dissimilar Metal Weld in the Decay Heat Drop Line (TAC NO. MD 8237) May 22, 2008; NRC letter to South Carolina Electric and Gas, Virgil C. Summer Nuclear Station, Unit 1, Proposed Alternative for the Application of Weld Overlay on Dissimilar Metal Welds of Pressurizer Nozzles (TAC NO. MD5665), March 25, 2008; and NRC letter to Entergy, Arkansas Nuclear One, Unit 1 – Request for Alternative to the American Society of Mechanical Engineers Boiler and Pressure Vessel Code Requirements for Pressurizer Nozzle Weld Overlay Repairs (TAC NO. MD4019), April 6, 2007, respectively.

10.0 References

1. The American Society of Mechanical Engineers Boiler and Pressure Vessel Code (ASME), Section XI, 1998 Edition through 2000 Addenda.
2. "Justification for the Removal of the 100 Square Inch Limitation for Ambient Temperature Temper Bead Welding on P-3 Material", EPRI-NP-1011898, February 2005.
3. "Ambient Temperature Preheat for Machine GTAW Temperbead Applications", EPRI Report GC-111050, November 1998.
4. ASME Draft Code Case N-740-2, "Full Structural Dissimilar Metal Weld Overlay for Repair or Mitigation of Class 1, 2, and 3 Items."
5. "Temperbead Welding Applications - 48 hour Hold for Ambient Temperature Temperbead Welding", EPRI Report 1013558, December 2006.
6. ASME Code Case N-504-3, "Alternative Rules for Repair of Classes 1, 2, and 3 Austenitic Stainless Steel Piping."

7. ASME Code Case N-638-1, "Similar and Dissimilar Metal Welding Using Ambient Temperature Machine GTAW Temper Bead Technique."
8. ASME Code Case N-416-3, "Alternative Pressure Test Requirement for Welded Repairs of Installation of Replacement Items by Welding, Class 1, 2, and 3."

Table 1. Recent Overlay Experience

Date	Plant	Component	Nozzle Diameter (in)
December 2007	SCE/SONGS 2	PZR surge nozzle	12
November 2007	Duke/Oconee 3	PZR spray nozzle safety/relief nozzles PZR surge nozzle	4 4.5 10
November 2007	APS / Palo Verde 3	PZR spray nozzle safety/relief nozzles PZR surge nozzle	4 6 12
October 2007	SCE/SONGS 3	PZR surge nozzle	12
October 2007	Duke / Catawba 2	PZR spray nozzle safety/relief nozzles PZR surge nozzle	4 6 14
October 2007	PSEG/Hope Creek	Recirc Inlet nozzle	10
October 2007	TVA Sequoyah 1	PZR spray nozzle safety/relief nozzles PZR surge nozzle	4 6 12
October 2007	Tai Power / Kuosheng 2	Recirc Inlet nozzle	10
September 2007	Progress / Harris	PZR spray nozzle safety/relief nozzles PZR surge nozzle	4 6 14
June 2007	APS / Palo Verde 1	PZR spray nozzle safety/relief nozzles PZR surge nozzle	4 6 12
May 2007	Entergy / ANO 1	PZR spray nozzle safety/relief nozzles PZR surge nozzle	4 4.5 10
May 2007	Duke / Oconee 2	PZR spray nozzle safety/relief nozzles PZR surge nozzle	4 4.5 10
April 2007	Duke / McGuire 1	PZR spray nozzle safety/relief nozzles PZR surge nozzle	4 6 14
April 2007	STPNOC / South Texas 2	PZR spray nozzle safety/relief nozzles PZR surge nozzle	6 6 16
March 2007	FPL / Duane Arnold	Recirc. Inlet nozzles	10
March 2007	TPC / Chin Shan	Recirc Outlet nozzle	23
March 2007	Entergy / Pilgrim	Recirc. Inlet nozzle	10
December 2006	TVA/Sequoyah 2	PZR spray nozzle safety/relief nozzles PZR surge nozzle	4 6 14
November 2006	SCE/SONGS Unit 3	PZR spray nozzle safety/relief nozzles PZR surge nozzle	5.1875 8 12.75

Table 1. Recent Overlay Experience (concluded)

Date	Plant	Component	Nozzle Diameter (in)
November 2006	Duke/Catawba Unit 1	PZR spray nozzle safety/relief nozzles PZR surge nozzle	4 6 14
November 2006	Duke/Oconee Unit 1	PZR spray nozzle safety/relief nozzles PZR surge nozzle HL Surge Nozzle	4.5 4.5 10.875 10.75
October 2006	Duke/McGuire Unit 2	PZR spray nozzle safety/relief nozzles PZR surge nozzle	4 6 14
April 2006	FENOC/Davis Besse	Hot leg drain nozzle	4
February 2006	SCE/SONGS Unit 2	PZR spray nozzle safety/relief nozzles	8 6
November 2005	TPC/Kuosheng Unit 2	Recirculation outlet nozzle	22
April 2004	PPL/Susquehanna Unit 1	Recirc. inlet nozzle Recirc. outlet nozzle	12 28
November 2003	AmerGen/TMI Unit 1	Surge line nozzle	11.5
October 2003	Entergy /Pilgrim	Core spray nozzle CRD return nozzle	10 5
October 2002	Exelon/Peach Bottom Units 2 & 3	Core spray nozzle Recirc. outlet nozzle CRD return nozzle	10 28 5
October 2002	AmerGen /Oyster Creek	Recirc. outlet nozzle	26
December 1999	FPL/Duane Arnold	Recirc. inlet nozzle	12
June 1999	FENOC /Perry	Feedwater nozzle	12
June 1998	CEG/Nine Mile Point Unit 2	Feedwater nozzle	12
March 1996	Progress/Brunswick Units 1 & 2	Feedwater nozzle	12
February 1996	Southern/Hatch Unit 1	Recirc. inlet nozzle	12
January 1991	Entergy/River Bend	Feedwater nozzle	12
March 1986	Entergy/Vermont Yankee	Core spray nozzle	10

ATTACHMENTS

Attachment 1
Proposed Method for Implementing Full Structural Weld Overlays
(Based on ASME Draft Code Case N-740-2)

Attachment 2
Proposed Temperbead Method

Attachment 3
Comparison of ASME Code Case N-504-3 and Appendix Q of ASME Section XI With the Proposed Alternative of Attachment 1 for Full Structural Weld Overlays

Attachment 4
Comparison of ASME Section XI Appendix VIII, Supplement 11 to Performance Demonstration Initiative (PDI)

Attachment 1
Proposed Method for Implementing Full Structural Weld Overlays
(Based on ASME Draft Code Case N-740-2)

A1.1 GENERAL REQUIREMENTS

Definitions

Full Structural Weld Overlay - Deposition of weld reinforcement on the outside diameter of the piping, component, or associated weld, such that the weld reinforcement is capable of supporting the design loads, without consideration of the piping, component, or associated weld beneath the weld reinforcement. Full structural weld overlay can either be mitigative or repair weld overlay as defined below:

Mitigative Weld Overlay *– Not used. Weld overlay that is applied over material with no inside-surface-connected flaws found during an examination performed in accordance with A1.2(a)(3), prior to the weld overlay being applied*

Repair Weld Overlay - Weld overlay that is applied over material with an inside-surface-connected flaw or subsurface defect, or where a pre-weld overlay examination is not performed

(a) A full-structural weld overlay shall be applied by deposition of weld reinforcement (weld overlay) on the outside surface of circumferential welds. Weld overlays may be applied to austenitic nickel alloy and austenitic stainless steel welds between the following:

P-No. 8 or P-No. 43 and P-Nos. 1, 3, 12A, 12B, or 12C[1]
P-No. 43 and P-Nos. 1, 3, 12A, 12B, and 12C
P-No. 8 and P-No. 43
Between P-Nos. 1, 3, 12A, 12B, and 12C materials

(b) Weld overlay filler metal shall be nickel alloy (28% Cr min., ERNiCrFe-7X) meeting the requirements of A1.1(d)(1) below applied 360 deg around the circumference of the item and deposited using a Welding Procedure Specification (WPS) for groove welding, qualified in accordance with the Construction Code and Owner's Requirements identified in the Repair/Replacement Plan. As an alternative to the postweld heat treatment (PWHT) requirements of the Construction Code and Owner's requirements, the following provisions may be applied.

---

[1] P- Nos. 12A, 12B, and 12C designations refer to specific material classifications originally identified in Section III and subsequently reclassified in a later Edition of Section IX.

(1) Not used. For P-No. 1 base materials, the Construction Code PWHT exemptions permitted for circumferential butt welds may be applied to exempt the weld overlay from PWHT, with the following clarifications:

(a) Not used. The nominal weld thickness is defined as the maximum overlay thickness applied over the ferritic base material.

(b) Not used. The base material thickness is defined as the maximum thickness of the ferritic material where the overlay is applied.

(2) Ambient-temperature temper bead welding in accordance with Attachment 2 shall be used.

(c) Prior to deposition of the weld overlay, the surface to be weld overlaid shall be examined using the liquid penetrant method. Indications with major dimension greater than 1/16 in. (1.5 mm) shall be removed, reduced in size, or weld repaired in accordance with the following requirements.

(1) One or more layers of weld metal shall be applied to seal unacceptable indications in the area to be repaired with or without excavation. The thickness of these layers shall not be used in meeting weld reinforcement design thickness requirements. Peening the unacceptable indication prior to welding is permitted.

(2) If weld repair of indications identified in A1.1(c)(1) is required, the area where the weld overlay is to be deposited, including any local weld repairs or initial weld overlay layer, shall be examined by the liquid penetrant method. The area shall contain no indications with major dimension greater than 1/16 in. (1.5 mm) prior to application of the structural layers of the weld overlay.

(3) To reduce the potential of hot cracking when applying an austenitic nickel alloy over P-No. 8 base metal, it is permissible to apply a buffer (transitional) layer of austenitic stainless steel filler metal (ER308L) over the austenitic stainless steel base metal. The ER308L filler metal shall have a delta ferrite content of 5 – 15 FN as reported on the Certified Material Test Report. The thickness of the buffer layer shall not be used in meeting weld reinforcement design thickness requirements.

(d) Weld overlay deposits shall meet the following requirements:

(1) The austenitic nickel alloy weld overlay shall consist of at least two weld layers deposited using a filler material with a Cr content of at least 28%. The first layer of weld metal deposited may not be credited toward the required thickness. A first

diluted layer may be credited toward the required thickness, provided the portion of the layer over the austenitic base material, austenitic filler material weld, and the associated dilution zone from an adjacent ferritic base material contain at least 24% Cr, and the Cr content of the deposited weld metal is determined by chemical analysis of the production weld or of a representative coupon taken from a mockup prepared in accordance with the WPS for the production weld.

(e) This proposed method is only for welding in applications predicted not to have exceeded fast neutron (E >1 MeV) fluence of 1×10^{17} neutrons per cm^2 prior to welding.

(f) A new weld overlay shall not be installed over the top of an existing weld overlay that has been in service.

A1.2 CRACK GROWTH AND DESIGN

(a) *Crack Growth Calculation of Flaws in the Original Weld or Base Metal.* The size of all flaws detected or postulated in the original weld or base metal shall be used to define the life of the overlay. In no case shall the inspection interval be longer than the life of the overlay or that specified in A1.3(c). Crack growth due to both stress corrosion and fatigue, shall be evaluated. Flaw characterization and evaluation shall be based on the examination results flaw, as described below. If the flaw is at or near the boundary of two different materials, evaluation of flaw growth in both materials is required.

(1) *Not Used. For repair overlays, the initial flaw size for crack growth in the original weld or base metal shall be based on the as-found flaw or postulated flaw, if no pre-overlay examination is performed.*

(2) For postulated flaws, the axial flaw length shall be set at 1.5 in. (38 mm) or the combined width of the weld plus buttering plus any adjacent SCC susceptible material, whichever is greater. The circumferential flaw length shall be assumed to be 360 deg. The depths associated with these lengths are specified in A1.2(a)(3) and A1.2(a)(4).

(3) *Not used. If an Appendix VIII, Supplement 10, or Supplement 2, as applicable, ultrasonic examination is performed prior to application of the overlay, and no inside-surface-connected planar flaws are discovered, initial flaws originated from the inside surface of the weldment equal to 10% of the original wall thickness shall be assumed in both the axial and circumferential directions, and the overlay shall be considered mitigative.*

(4) If an Appendix VIII, Supplement 10, or Supplement 2, as applicable, ultrasonic examination is not performed prior to application of the overlay, initial inside-surface-connected planar flaws equal to a least 75% through the original wall

thickness shall be assumed, in both the axial and circumferential directions, and the overlay shall be considered repair. For cast austenitic stainless steel items, a 100%-through-wall flaw is assumed, unless the subsequent inservice inspection schedule is modified as discussed in A1.3(c)(8).

(5) There may be circumstances in which an overlay examination is performed using an ultrasonic examination procedure qualified in accordance with Appendix VIII, Supplement 11 for depths greater than the outer 25% of the original wall thickness (Fig. A1-2). For such cases, the initial flaw depths assumed would be the detected depth found by the Appendix VIII, Supplement 11 qualified examination plus the postulated worst case flaw in the region not covered by the Appendix VIII ultrasonic examination.

(6) In determining the expected life of the overlay, any inside-surface-connected planar flaw found by the overlay preservice inspection of A1.3(b) that exceeds the depth of (3), (4) or (5) above shall be used as part of the initial flaw depth. The initial flaw depth assumed is the detected flaw depth plus the postulated worst-case flaw depth in the region of the pipe wall thickness, which was not examined using an ultrasonic examination procedure meeting Appendix VIII for that region. An overlay meeting this condition shall be considered repair, rather than mitigation.

(b) *Structural Design and Sizing of the Overlay.* The design of the weld overlay shall satisfy the following, using the assumptions and flaw characterization restrictions in A1.2(a). The following design analysis shall be completed in accordance with IWA-4311:

(1) The axial length and end slope of the weld overlay shall cover the weld and heat-affected zones on each side of the weld as well as any SCC susceptible base material adjacent to weld, and provide for load redistribution from the item into the weld overlay and back into the item without violating applicable stress limits of NB-3200. Any laminar flaws in the weld overlay shall be evaluated in the analysis to ensure that load redistribution complies with the above. These requirements will usually be satisfied if the weld overlay full thickness length extends axially beyond the SCC susceptible material or projected flaw by at least $0.75\sqrt{Rt}$, where R is the outer radius of the item and t is the nominal wall thickness of the item at the applicable side of the overlay (i.e. R and t of the nozzle on the nozzle side and R and t of the safe-end on the safe-end side).

(2) Unless specifically analyzed in accordance with A1.2(b)(1), the end transition slope of the overlay shall not exceed 30 deg.

(3) For full structural overlays, the assumed flaw in the underlying base material or weld shall be based on the limiting case of the two below that results in the larger required

overlay thickness:

(a) 100% through-wall for the entire circumference

(b) 100% through-wall for 1.5 in. (38 mm) or the combined width of the weld plus buttering plus any SCC susceptible material, whichever is greater, in the axial direction at the worst location around the circumference.

(4) The overlay design thickness shall be verified, using only the weld overlay thickness conforming to the deposit analysis requirements of A1.1(d). The combined wall thickness at the weld overlay, or any postulated worst-case planar flaws under the laminar flaws in the weld overlay, and the effects of any discontinuity (e.g., another weld overlay or reinforcement for a branch connection) within a distance of $2.5\sqrt{Rt}$ from the toes of the weld overlay, including the flaw size assumptions defined in 2(b)(3) above, shall be evaluated and shall meet the requirements of IWB-3640, IWC-3640, or IWD-3640, as applicable.

(5) The effects of any changes in applied loads, as a result of weld shrinkage from the entire overlay, on other items in the piping system (e.g., support loads and clearances, nozzle loads, and changes in system flexibility and weight due to the weld overlay) shall be evaluated. Existing flaws previously accepted by analytical evaluation shall be evaluated in accordance with IWB-3640, IWC-3640, or IWD-3640, as applicable.

A1.3 EXAMINATION

In lieu of all other examination requirements, the examination requirements of this proposed method shall be met for the life of the overlay. Nondestructive examination methods shall be in accordance with IWA-2200, except as specified herein. Nondestructive examination personnel shall be qualified in accordance with IWA-2300. Ultrasonic examination procedures and personnel shall be qualified in accordance with Appendix VIII, Supplement 11. The examination shall be performed to the maximum extent practicable, for axial and circumferential flaws. If 100% coverage of the required volume for axial flaws cannot be achieved, but essentially 100% coverage for circumferential flaws (100% of the susceptible volume) can be achieved, the examination for axial flaws shall be performed to achieve the maximum coverage practicable, with limitations noted in the examination report. The examination coverage requirements shall be considered to be met.

(a) Acceptance Examination

(1) The weld overlay shall have a surface finish of 250 μin. (6.3 μm) RMS or better and contour that permits ultrasonic examination in accordance with procedures qualified in

accordance with Appendix VIII. The weld overlay shall be inspected to verify acceptable configuration.

(2) The weld overlay and the adjacent base material for at least ½ in. (13 mm) from each side of the overlay shall be examined using the liquid penetrant method. The weld overlay shall satisfy the surface examination acceptance criteria for welds of the Construction Code or NB-5300. The adjacent base material shall satisfy the surface examination acceptance criteria for base material of the Construction Code or NB-2500. If ambient temperature temper bead welding is performed, the liquid penetrant examination of the completed weld overlay shall be conducted no sooner than 48 hrs following completion of the three tempering layers over the ferritic steel.

(3) The examination volume A-B-C-D in Fig. A1-1(a) shall be ultrasonically examined to assure adequate fusion (i.e., adequate bond) with the base material and to detect welding flaws, such as interbead lack of fusion, inclusions, or cracks. The interface C-D shown between the overlay and the weld includes the bond and heat-affected zone from the overlay. If ambient temperature temper bead welding is performed, the ultrasonic examination shall be conducted at least 48 hrs following completion of the three tempering layers over the ferritic steel. Planar flaws detected in the weld overlay acceptance examination shall meet the preservice examination standards of Table IWB-3514-2. In applying the acceptance standards to planar indications, the thickness, t_1 or t_2, defined in Fig. A1-1(b), shall be used as the nominal wall thickness in Table IWB-3514-2, provided the base material beneath the flaw (i.e., safe end, nozzle, or piping material) is not susceptible to stress corrosion cracking (SCC). For susceptible material, t_1 shall be used. If a flaw in the overlay crosses the boundary between the two regions, the more conservative of the two dimensions (t_1 or t_2) shall be used.

(4) Laminar flaws in the weld overlay shall meet the following requirements:

(a) The acceptance standards of Table IWB-3514-3 shall be met, with the additional limitation that the total laminar flaw shall not exceed 10% of the weld surface area, and that no linear dimension of the laminar flaw area shall exceed the greater of 3 in. (76 mm) or 10% of the pipe circumference.

(b) For examination volume A-B-C-D in Fig. A1-1(a), the reduction in coverage due to laminar flaws shall be less than 10%. The uninspectable volume is the volume in the weld overlay underneath the laminar flaws for which coverage cannot be achieved with the angle beam examination method.

(c) Any uninspectable volume in the weld overlay shall be assumed to contain the largest radial planar flaw that could exist within that volume. This assumed flaw shall meet the preservice examination acceptance standards of Table IWB-3514-

2, with nominal wall thickness as defined above for planar flaws. Alternatively, the assumed flaw shall be evaluated and shall meet the requirements of IWB-3640, IWC-3640, and IWD-3640, as applicable. Both axial and circumferential planar flaws shall be assumed.

(5) After completion of all welding activities, VT-3 visual examination shall be performed on all affected restraints, supports, and snubbers, to verify that design tolerances are met.

(b) *Preservice Inspection*

(1) The examination volume in Fig. A1-2 shall be ultrasonically examined. The angle beam shall be directed perpendicular and parallel to the piping axis, with scanning performed in four directions, to locate and size any planar flaws that have propagated into the outer 25% of the base metal thickness or into the weld overlay.

(2) The preservice examination acceptance standards of Table IWB-3514-2 shall be met for the weld overlay. In applying the acceptance standards, wall thickness shall be the thickness of the weld overlay as defined in Fig. A1-1(b). Planar flaws in the outer 25% of the base material thickness shall meet the design analysis requirements of A1.2(b).

(3) The flaw evaluation requirements of IWB-3640, IWC-3640, or IWD-3640 shall not be applied to planar flaws, identified during preservice examination, that exceed the preservice examination acceptance standards of Table IWB-3514-2.

(c) *Inservice Inspection*

(1) The weld overlay examination shall be added to the inspection plan. The weld overlay inspection interval shall not be greater than the life of the overlay as determined in A1.2(a) above. All weld overlays shall be examined prior to the end of their design life.

(2) The weld overlay examination volume in Fig. A1-2 shall be ultrasonically examined during the first or second refueling outage following application.

(3) The weld overlay examination volume in Fig. A1-2 shall be ultrasonically examined to determine if any new or existing planar flaws have propagated into the outer 25% of the base material thickness or into the overlay. The angle beam shall be directed perpendicular and parallel to the piping axis, with scanning performed in four directions.

(4) The weld overlay shall meet the inservice examination acceptance standards of Table IWB-3514-2. If the acceptance standards of Table IWB-3514-2 cannot be met, the weld

overlay shall meet the acceptance standards of IWB-3600, IWC-3600, or IWD-3600, as applicable. If a planar flaw is detected in the outer 25% of the base material thickness, it shall be included in the design analysis required by Section A1.2. Any indication characterized as stress corrosion cracking in the weld overlay material is unacceptable.

(5) Weld overlay examination volumes in Fig. A1-2 that show no indication of planar flaw growth or new planar flaws shall be placed into a population to be examined on a sample basis, except as required by A1.3(c)(1). Twenty-five percent of this population shall be examined once during each inspection interval.

(6) If inservice examinations reveal planar flaw growth or new planar flaws that are evaluated under the acceptance standards of IWB-3514, IWB-3600, IWC-3600, or IWD-3600, the weld overlay examination volume shall be reexamined during the first or second refueling outage following discovery of the growth or new flaws.

(7) For weld overlay examination volumes with unacceptable indications in accordance with A1.3(c) (4), the weld overlay and original defective weld shall be removed. A repair/replacement activity shall be performed in accordance with IWA-4000.

(8) If preservice and inservice examinations in accordance with ASME Section XI, Appendix VIII, Supplement 11 cannot be performed for the entire weld overlay examination volume in Figure A1-2, because of cast austenitic stainless steel items, and a 100% initial flaw assumption is not used in the crack growth evaluation of A1.2(a), a 75% through wall depth may be assumed in the crack growth calculation provided the required inspection volume is examined at a higher frequency than the requirements in paragraph A1.3(c). The subject weld shall be ultrasonically inspected during the first or second refueling outage following the weld overlay installation. *Not used. If UT is performed prior to weld overlay installation and after installation without detecting any planar flaws in the original weld and the weld overlay, the first or second refueling outage UT may be eliminated.* After the first ISI examination, the required inspection volume shall be ultrasonically inspected every 10 years from the date of the installation until such time when UT is qualified to examine the entire required inspection volume in accordance with the performance demonstration requirements of ASME Code, Section XI, Appendix VIII. After the required exam volume is examined by qualified UT for the CASS material and no planar flaws are detected, the weld may be placed in the 25% sample inspection population per paragraph A1.3(c)(5). The inspection of the overlaid weld shall not be credited to satisfy the requirement of the 25% sample inspection every ten years of overlaid welds without cast stainless steel materials or other restrictions.

(d) Additional Examinations.

If inservice examinations reveal a defect, in accordance with A1.3(c)(4), planar flaw growth into the weld overlay design thickness, or axial flaw growth beyond the specified examination volume, additional weld overlay examination volumes, equal to the number scheduled for the current inspection period, shall be examined prior to return to service. If additional defects are found in the second sample, 50% of the total population of weld overlay examination volumes shall be examined prior to return to service. If additional defects are found, the entire remaining population of weld overlay examination volumes shall be examined prior to return to service.

A1.4 PRESSURE TESTING

A system leakage test shall be performed in accordance with IWA-5000. The NRC previously approved Code Case N-416-3, "Alternative Pressure Test Requirement for Welded Repairs, Fabrication Welds for Replacement Parts and Piping Subassemblies, or Installation of Replacement Items by Welding, Class 1, 2, and 3," for use. The code case allows use of a system leakage test, in conjunction with specified NDE, in lieu of a system hydrostatic test to detect leakage from welded repairs, fabrication welds for replacement parts and piping subassemblies, or welds for installation of replacement items. For a system leakage test to be used, Code Case N-416-3 requires:

- Performance of NDE in accordance with the methods of Non-Mandatory Appendix Q and acceptance criteria of the applicable Subsection of the 1992 Edition of Section III.
- Performance of a visual examination (VT-2) prior to or immediately upon return to service in conjunction with a system leakage test, using the 1992 Edition of Section XI, in accordance with IWA-5000, at nominal operating pressure and temperature.
- Documentation of use of this Case on an NIS-2 Form.

A1.5 DOCUMENTATION

Use of this proposed method shall be documented on Form NIS-2.

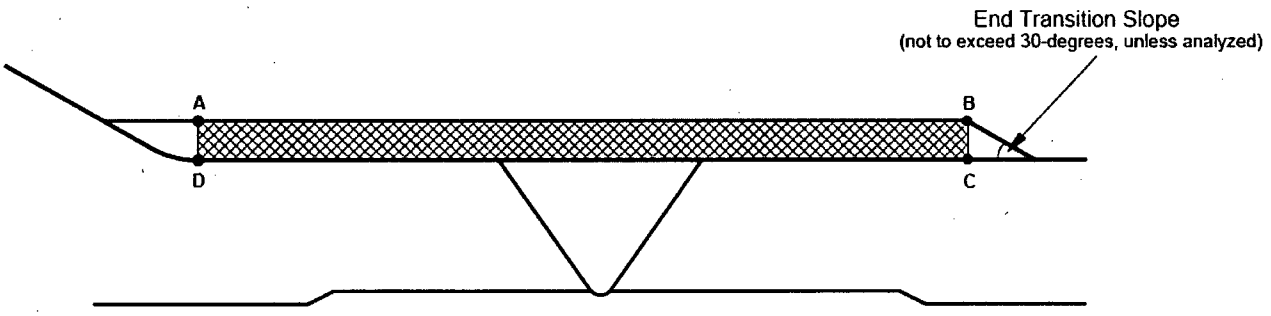

(a) Examination Volume A-B-C-D

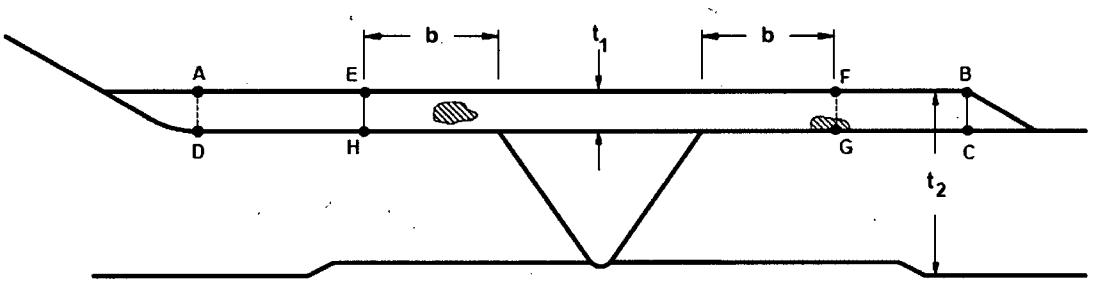

(b) Thickness (t_1 and t_2) for Table IWB-3514-2

FIG. A1-1. EXAMINATION VOLUME AND THICKNESS DEFINITIONS

GENERAL NOTES:

(a) Dimension b is equivalent to the nominal thickness of nozzle or pipe being overlaid, as appropriate.

(b) The nominal wall thickness is t_1 for flaws in E-F-G-H, and t_2 for flaws in A-E-H-D or F-B-C-G.

(c) For flaws that span two examination volumes (such as illustrated at F-G in the figure), the t_1 thickness shall be used.

The weld includes the nozzle butter, where applied, plus any SCC susceptible base material in the nozzle.

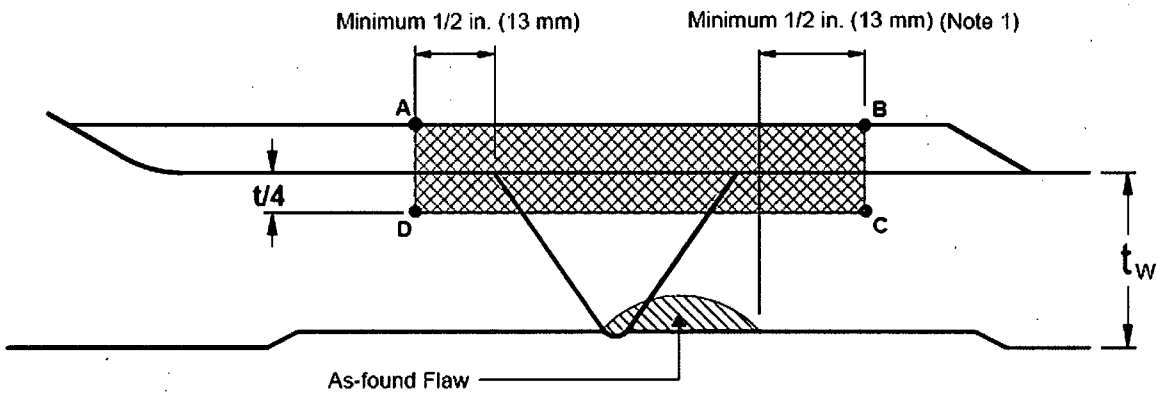

Examination Volume A-B-C-D

As-found Flaw

FIG. A1-2 PRESERVICE AND INSERVICE EXAMINATION VOLUME

NOTE:

(1) For axial or circumferential flaws, the axial extent of the examination volume shall extend at least 1/2 in. (13 mm) beyond the as-found flaw and at least 1/2 in. (13 mm) beyond the toes of the original weld, including weld end butter, where applied.

GENERAL NOTE:

The weld includes the nozzle butter, where applied.

Attachment 2
Proposed Temperbead Method

A2.1 GENERAL REQUIREMENTS

(a) This Attachment applies to dissimilar austenitic filler metal welds between P-Nos. 1, 3, 12A, 12B, and 12C[2] materials and their associated welds and welds joining P-No. 8 or 43 materials to P-Nos. 1, 3, 12A, 12B, and 12C materials with the following limitation: This Attachment shall not be used to repair SA-302 Grade B material unless the material has been modified to include from 0.4% to 1.0% nickel, quenching, tempering, and application of a fine grain practice.

(b) The maximum area of an individual weld overlay based on the finished surface over the ferritic base material shall be 500 in.^{2} (325 000 mm^2).

(c) Repair/replacement activities on a dissimilar-metal weld in accordance with this Attachment are limited to those along the fusion line of a nonferritic weld to ferritic base material on which 1/8 in. (3 mm) or less of nonferritic weld deposit exists above the original fusion line.

(d) If a defect penetrates into the ferritic base material, repair of the base material, using a nonferritic weld filler material, may be performed in accordance with this Attachment, provided the depth of repair in the base material does not exceed 3/8 in. (10 mm).

(e) Prior to welding, the area to be welded and a band around the area of at least 1½ times the component thickness or 5 in. (130 mm), whichever is less, shall be at least 50°F (10°C).

(f) Welding materials shall meet the Owner's Requirements and the Construction Code and Cases specified in the Repair/Replacement Plan. Welding materials shall be controlled so that they are identified as acceptable until consumed.

(g) Peening may be used, except on the initial and final layers.

A2.2 WELDING QUALIFICATIONS

The welding procedures and operators shall be qualified in accordance with Section IX and the requirements of A2.2.1 and A2.2.2.

---

[2] P- Nos. 12A, 12B, and 12C designations refer to specific material classifications originally identified in Section III and subsequently reclassified in a later Edition of Section IX.

A2.2.1 Procedure Qualification

(a) The base materials for the welding procedure qualification shall be of the same P-Number and Group Number as the materials to be welded. The materials shall be postweld heat treated to at least the time and temperature that was applied to the materials being welded.

(b) The maximum interpass temperature for the first three layers of the test assembly shall be 150°F (66°C).

(c) The weld overlay shall be qualified using a groove weld coupon. The test assembly groove depth shall be at least 1 in. (25 mm). The test assembly thickness shall be at least twice the test assembly groove depth. The test assembly shall be large enough to permit removal of the required test specimens. The test assembly dimensions on either side of the groove shall be at least 6 in. (150 mm). The qualification test plate shall be prepared in accordance with Fig. A2-1.

(d) Ferritic base material for the procedure qualification test shall meet the impact test requirements of the Construction Code and Owner's Requirements. If such requirements are not in the Construction Code and Owner's Requirements, the impact properties shall be determined by Charpy V-notch impact tests of the procedure qualification base material at or below the lowest service temperature of the item to be repaired. The location and orientation of the test specimens shall be similar to those required in A2.2.1(e), but shall be in the base metal.

(e) Charpy V-notch tests of the ferritic heat-affected zone (HAZ) shall be performed at the same temperature as the base metal test of A2.2.1(d). Number, location, and orientation of test specimens shall be as follows:

(1) The specimens shall be removed from a location as near as practical to a depth of one-half the thickness of the deposited weld metal. The coupons for HAZ impact specimens shall be taken transverse to the axis of the weld and etched to define the HAZ. The notch of the Charpy V-notch specimen shall be cut approximately normal to the material surface in such a manner as to include as much HAZ as possible in the resulting fracture.

(2) If the material thickness permits, the axis of a specimen shall be inclined to allow the root of the notch to be aligned parallel to the fusion line.

(3) If the test material is in the form of a plate or a forging, the axis of the weld shall be oriented parallel to the principal direction of rolling or forging.

(4) The Charpy V-notch test shall be performed in accordance with SA-370. Specimens shall be in accordance with SA-370, Fig. 11, Type A. The test shall consist of a set of

three full-size 10 mm x 10 mm specimens. The lateral expansion, percent shear, absorbed energy, test temperature, orientation, and location of all test specimens shall be reported in the Procedure Qualification Record.

(f) The average lateral expansion value of the three HAZ Charpy V-notch specimens shall be equal to or greater than the average lateral expansion value of the three unaffected base metal specimens. However, if the average lateral expansion value of the HAZ Charpy V-notch specimens is less than the average value for the unaffected base metal specimens and the procedure qualification meets all other requirements of this Attachment, either of the following shall be performed:

(1) The welding procedure shall be requalified.

(2) An Adjustment Temperature for the procedure qualification shall be determined in accordance with the applicable provisions of NB-4335.2 of Section III, 2001 Edition with 2002 Addenda. The RT_{NDT} or lowest service temperature of the materials for which the welding procedure will be used shall be increased by a temperature equivalent to that of the Adjustment Temperature.

A2.2.2 Performance Qualification

Welding operators shall be qualified in accordance with ASME Section IX.

A2.3 WELDING PROCEDURE REQUIREMENTS

The welding procedure shall include the following requirements.

(a) The weld metal shall be deposited by the automatic or machine GTAW process.

(b) Dissimilar metal welds shall be made using A-No. 8 weld metal (QW-442) for P-No. 8 to P- No. 1, 3, or 12 (A, B, or C) [1] weld joints or F-No. 43 weld metal (QW-432) for P-No. 8 or 43 to P-No. 1, 3, or 12 (A, B, or C) [1] weld joints.

(c) The area to be welded shall be buttered with a deposit of at least three layers to achieve at least 1/8 in. (3 mm) overlay thickness with the heat input for each layer controlled to within ±10% of that used in the procedure qualification test. The heat input of the first three layers shall not exceed 45 kJ/in. (1.8 kJ/mm) under any conditions. Particular care shall be taken in the placement of the weld layers of the austenitic overlay filler material at the toe of the overlay to ensure that the HAZ and ferritic base metal are tempered. Subsequent layers shall be deposited with a heat input not exceeding that used for layers beyond the third layer in the procedure qualification.

(d) The maximum interpass temperature for field applications shall be 350°F (180°C) for all weld layers regardless of the interpass temperature used during qualification. The interpass temperature limitation of QW-406.3 need not be applied.

(e) The interpass temperature shall be determined as follows:

Direct temperature measurement (e.g. pyrometers, temperature-indicating crayons, and thermocouples) during welding or if direct measurement is impractical, one of the following methods shall be used to determine the interpass temperature:

(a) heat-flow calculations using the variables listed below as a minimum

(1) welding heat input

(2) initial base material temperature

(3) configuration, thickness, and mass of the item being welded

(4) thermal conductivity and diffusivity of the materials being welded

(5) arc time per weld pass and delay time between each pass

(6) arc time to complete the weld

(b) measurement of the maximum interpass temperature on a test coupon that is equal to or less than the thickness of the item to be welded. The maximum heat input of the welding procedure shall be used in welding the test coupon.

(f) Particular care shall be given to ensure that the weld region is free of all potential sources of hydrogen. The surfaces to be welded, filler metals, and shielding gas shall be suitably controlled.

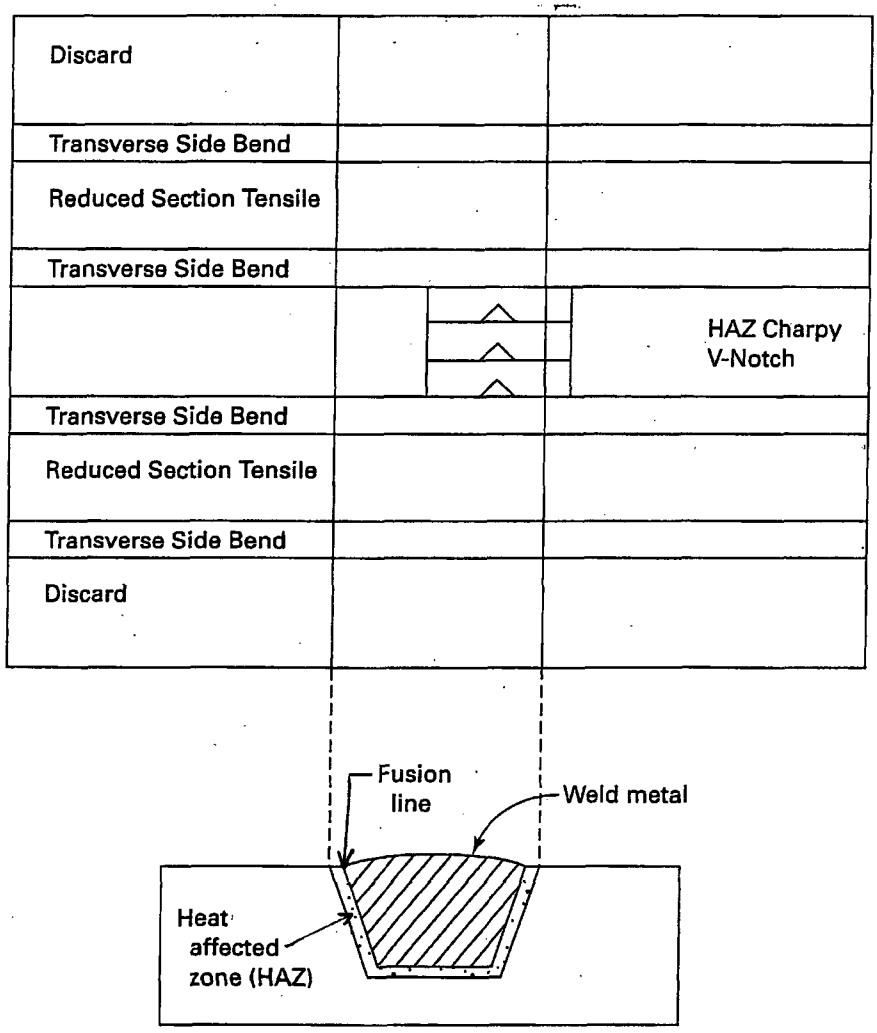

GENERAL NOTE: Base metal Charpy impact specimens are not shown.

FIG. A2-1 QUALIFICATION TEST PLATE

Attachment 3

COMPARISON OF ASME CODE CASE N-504-3 AND APPENDIX Q OF ASME SECTION XI WITH THE PROPOSED ALTERNATIVE OF ATTACHMENT 1 FOR FULL STRUCTURAL WELD OVERLAYS

Code Case N-504-3 and Appendix Q of ASME Section XI	Proposed Alternatives of Attachment 1
Code Case N-504-3 provides requirements for reducing a defect to a flaw of acceptable size by deposition of weld reinforcement (weld overlay) on the outside surface of the pipe using austenitic stainless steel filler metal as an alternative to defect removal. Code Case N-504-3 is applicable to austenitic stainless steel piping only. According to Regulatory Guide 1.147, the provisions of Nonmandatory Appendix Q of ASME Section XI must also be met when using this Case. Therefore, the Code Case N-504-3 requirements presented below have been supplemented by Appendix Q of ASME Section XI.	The proposed alternative of Attachment 1 provides requirements for installing a full structural weld overlay by deposition of weld reinforcement (weld overlay) on the outside surface of the item using Nickel Alloy 52M filler metal. Attachment 1 is applicable to dissimilar metal welds associated with ferritic, stainless steel, and nickel alloy materials. It is also applicable to similar metal welds in austenitic stainless steels. The proposed alternative of Attachment 1 is based on draft Code Case N-740-2.
General Requirements	**A1.1 General Requirements**
Code Case N-504-3 and Appendix Q are only applicable to P-No. 8 austenitic stainless steels.	As specified in paragraph A1.1(a), the proposed alternative is applicable to dissimilar metal 82/182 welds joining P-No. 3 to P-No. 8 or 43 materials and P-No. 8 to P-No. 43 materials. It is also applicable to austenitic stainless steel welds joining P-No. 8 materials. **Basis:** Code Case N-504-3 and Appendix Q are applicable to austenitic weld overlays of P-No. 8 austenitic stainless steel materials. Based on draft Code Case N-740-2, the proposed alternative of Attachment 1 was specifically written to address the application of weld overlays over dissimilar metal welds and austenitic stainless steel welds.
According to paragraph (b) of Code Case N-504-3 as supplemented by Appendix Q, weld overlay filler metal shall be low carbon (0.035% max.) austenitic stainless steel applied 360° around the circumference of the pipe, and shall be deposited using a Welding Procedure Specification for groove welding, qualified in accordance with the Construction Code and Owner's Requirements and identified in the repair/replacement plan.	The weld filler metal and procedure requirements of paragraph A1.1(b) are equivalent to Code Case N-504-3 and Appendix Q except as noted below: • Weld overlay filler metal shall be austenitic Nickel Alloy 52M (ERNiCrFe-7A) filler metal which has a chromium content of at least 28%. As an alternative to post-weld heat treatment, the provisions for "Ambient Temperature Temperbead Welding" may be used on the ferritic nozzle as described in Attachment 2.

Code Case N-504-3 and Appendix Q of ASME Section XI	Proposed Alternatives of Attachment 1
	Basis: The weld overlay will be deposited with ERNiCrFe-7A (Alloy 52M) filler metal. It has been included into ASME Section IX as F-No. 43 filler metals. Containing 28.0 - 31.5% chromium (roughly twice the chromium content of 82/182 filler metal), this filler metal has excellent resistance to PWSCC. This point has been clearly documented in EPRI Technical Report MRP-115, Section 2.2. Regarding the WPS, paragraph A1.1(b) provides clarification that the WPS used for depositing weld overlays must be qualified as a groove welding procedure to ensure that mechanical properties of the WPS are appropriately established. Where welding is performed on ferritic nozzles, an ambient temperature temperbead WPS will be used. Suitability of an ambient temperature temperbead WPS is addressed in Section 6.C of this Request.
According to paragraph (e) of Code Case N-504-3 as supplemented by Appendix Q, the weld reinforcement shall consist of at least two weld layers having as-deposited delta ferrite content of at least 7.5 FN. The first layer of weld metal with delta ferrite content of at least 7.5 FN shall constitute the first layer of the weld reinforcement that may be credited toward the required thickness. Alternatively, first layers of at least 5 FN provided the carbon content is determined by chemical analysis to be less than 0.02%.	The weld overlay described in Attachment 1 is deposited using Nickel Alloy 52M filler metal instead of austenitic stainless steel filler metals. Therefore, the basis for crediting the first layer towards the required design thickness will be based on the chromium content of the nickel alloy filler metal. According to paragraph A1.1(d)(1), the first layer of Nickel Alloy 52M deposited weld metal may be credited toward the required thickness provided the portion of the layer over the austenitic base material, austenitic weld, and the associated dilution zone from an adjacent ferritic base material contains at least 24% chromium. The chromium content of the deposited weld metal may be determined by chemical analysis of the production weld or from a representative coupon taken from a mockup prepared in accordance with the WPS for the production weld. **Basis:** The weld overlay will be deposited with ERNiCrFe-7A (Alloy 52M) filler metal. Credit for the first weld layer may not be taken toward the required thickness unless it has been shown to contain at least 24% chromium. This is a sufficient amount of chromium to prevent PWSCC. Section 2.2 of EPRI Technical Report MRP-115 states the following: "The only well explored effect of the compositional differences among the weld alloys on PWSCC is the influence of chromium. Buisine, et al. evaluated the PWSCC resistance of nickel-based weld metals with various chromium contents ranging from about 15% to 30% chromium. Testing was performed in doped steam and primary water. Alloy 182, with about 14.5% chromium, was the most susceptible. Alloy 82 with 18-20% chromium took three or four times longer to crack. For chromium contents between 21 and 22%, no stress corrosion crack initiation was

Code Case N-504-3 and Appendix Q of ASME Section XI	Proposed Alternatives of Attachment 1
	observed ... "
Design and Crack Growth Considerations	**A1.2 Design and Crack Growth Considerations**
The design and flaw characterization provisions of Code Case N504-3, paragraphs (f) and (g) as supplemented by Appendix Q are summarized below: (i) Flaw characterization and evaluation are based on the as-found flaw. Flaw evaluation of the existing flaws is based on IWB3640 for the design life. • Multiple circumferential flaws shall be treated as one flaw of length equal to the sum of the lengths of the individual flaws. • Circumferential flaws are postulated as 100% through-wall for the entire circumference with one exception. When the combined length of circumferential flaws does not exceed 10% of the circumference, the flaws are only assumed to be 100% through-wall for the combined length of the flaws. • For axial flaws 1.5 inches or longer, or for five or more axial flaws of any length, the flaws shall be assumed to be 100% through-wall for the axial length of the flaw and entire circumference of the pipe. (ii) For four or fewer axial flaws less than 1.5 inches in length, the weld overlay thickness need only consist of two or more layers of weld metal meeting the deposit analysis requirements. iii) The axial length and end slope of the weld overlay shall cover the weld and HAZs on each side of the weld, and shall provide for load redistribution from the item into the weld overlay and back into the item without violating applicable stress limits of the Construction Code. Any laminar flaws in the weld overlay shall be evaluated in the analysis to ensure that load redistribution complies with the above. These requirements are usually met if the weld overlay extends beyond the projected flaw by at least 0.75 $(Rt)^{1/2}$.	The design and flaw evaluation provisions in the proposed alternative of Section A1.2 are the same as Code Case N-504-3 as supplemented in Appendix Q with the exceptions below. For crack growth evaluations, if the flaw is at or near the boundary of two different materials, evaluation of flaw growth in both materials is required. For design, flaws shall be assumed to be 100% through the original wall thickness for the entire circumference. Unless specifically analyzed, the end transition slope of the overlay shall not exceed 30°. **Basis:** Regarding the crack growth analysis, the proposed alternative of Attachment 1 allows for the possibility that the flaw is at or near the boundary of the overlay material, which is different than the base material. With regard to design, flaws are considered to be 100% through the original weld and no structural credit is taken for the weld. The maximum transition end slope, without specific analysis, is limited to 30° instead of 45° to minimize transition discontinuity stresses. All other requirements are equivalent to Code Case N-504-3 as supplemented by Appendix Q.

Code Case N-504-3 and Appendix Q of ASME Section XI	Proposed Alternatives of Attachment 1
iv) Unless specifically analyzed, the end transition slope of the overlay shall not exceed 45°, and a slope of not more than 1:3 is recommended. (v) The overlay design thickness of items shall be based on the measured diameter, using only the weld overlay thickness conforming to the deposit analysis requirements. The combined wall thickness at the weld overlay, any planar flaws in the weld overlay, and the effects of any discontinuity (e.g., another weld overlay or reinforcement for a branch connection) within a distance of 0.75 $(Rt)^{1/2}$ from the toes of the weld overlay, shall be evaluated and meet the requirements of IWB-, IWC-, or IWD-3640. vi) The effects of any changes in applied loads, as a result of weld shrinkage or existing flaws previously accepted by analytical evaluation shall be evaluated in accordance with IWB-3640, IWC-3640, or IWD-3640, as applicable.	
Examination and Inspection	**A1.3 Examination and Inspection**
Code Case N-504-3 does not include requirements for acceptance examination or inservice examination of weld overlays. Preservice examination is addressed. However, Appendix Q, Article Q-4000 does specify requirements applicable to weld acceptance examinations, preservice examinations, and inservice examinations.	Section A1.3 of the proposed alternative specifies requirements applicable to weld acceptance examinations, preservice examinations, and inservice examinations.
Acceptance Examination	**A1.3(a) Acceptance Examination**
Acceptance Examination Q-4100(c) states that the examination volume in Figure Q-4100-1 shall be ultrasonically examined to assure adequate fusion (i.e., adequate bond) with the base metal and to detect welding flaws, such as inter-bead lack of fusion, inclusions, or cracks. Planar flaws shall meet the preservice examination standards of Table IWB-3514-2. Laminar flaws shall meet the following:	The acceptance standards in paragraph A1.3(a)(3) are identical to those of paragraph Q-4100(c) except that paragraph A1.3(a)(3) includes requirements and clarifications that are not included in Appendix Q. First, it specifies that the ultrasonic examination shall be conducted at least 48 hours after completing the third layer of the weld overlay when ambient temperature temperbead welding is used. Secondly, it provides the following clarifications: The interface C-D between the weld overlay and the weld includes the bond and the HAZ from the weld overlay.

Code Case N-504-3 and Appendix Q of ASME Section XI	Proposed Alternatives of Attachment 1
	In applying the acceptance standards, wall thickness "t_w" shall be the thickness of the weld overlay. **Basis**: Appendix Q is applicable to austenitic stainless steel materials only; therefore, ambient temperature temperbead welding would not be applicable. It is applicable to welding performed in the proposed alternative. When ambient temperature temperbead welding is performed, nondestructive examinations must be performed at least 48 hours after completing the third layer of the weld overlay to allow sufficient time for hydrogen cracking to occur (if it is to occur). Technical justification for starting the 48 hours after completion of the third layer of the weld overlay is provided in paragraph 6.C of the Request. The other two changes are simply clarifications that were added to ensure that the examination requirements were appropriately performed.
Q-4100(c)(1) states that laminar flaws shall meet the acceptance standards of Table IWB-3514-3.	The acceptance standards in paragraph A1.3(a)(4)(a) are identical to paragraph Q-4100(c)(1) except that paragraph A1.3(a)(4)(a) includes the additional limitation that the total laminar flaw shall not exceed 10% of the weld surface area and that no linear dimension of the laminar flaw area exceeds 3.0 in. Basis: These changes were made to provide additional conservatism to the weld overlay examination and to reduce the size of the un-inspectable volume beneath a laminar flaw. See paragraph 6.B of this Relief Request for additional information
Q-4100(c)(4) allows the performance of radiography in accordance with the Construction Code as an alternative to Q-4100(c)(3).	The acceptance standards in paragraph A1.3(a) do not include the radiographic alternative of paragraph Q-4100(c)(4). **Basis:** The UT examinations performed in accordance with the proposed alternative are in accordance with ASME Code Section XI, Appendix VIII, Supplement 11 as implemented through the PDI. These examinations are considered more sensitive for detection of defects, either from fabrication or service-induced, than either ASME Code Section III radiographic or ultrasonic methods. Furthermore, construction type flaws have been included in the PDI qualification sample sets for evaluating procedures and personnel. See Section 6.B of this Relief Request for additional justification.

Code Case N-504-3 and Appendix Q of ASME Section XI	Proposed Alternatives of Attachment 1
Preservice Inspection	**A1.3(b) Preservice Inspection**
Q-4200(b) states that the preservice examination acceptance standards of Table IWB-3514-2 shall be met for the weld overlay. Cracks in the outer 25% of the base metal shall meet the design analysis requirements of Q-3000.	The acceptance standards in paragraph A1.3(b)(2) are identical to paragraph Q-4200(b) except paragraph A1.3(b)(2) includes the following statement: "In applying the acceptance standards, wall thickness shall be the thickness of the weld overlay." **Basis:** This provision is actually a clarification that the nominal wall thickness of Table IWB-3514-2 shall be considered the thickness of the weld overlay. It must be remembered that the acceptance standards were originally written for the welds identified in IWB-2500. Because IWB-2500 does not address weld overlays, this clarification was provided to avoid any potential confusion. However, defining the weld overlay thickness as the nominal wall thickness of Table IWB-3514-2 has always been the practice since it literally becomes the new design wall of the piping or component nozzle.
Pressure Testing	**A1.4 Pressure Testing**
(h) The completed repair shall be pressure tested in accordance with IWA-5000. A system hydrostatic test is required if the flaw penetrated the pressure boundary. A system leakage test may be performed if pressure boundary is not penetrated.	The pressure testing requirements of Section A1.4 are similar to paragraph (h) of Code Case N-504-3 except that only a system leakage test per IWA-5000 is required.

Attachment 4

COMPARISON OF ASME SECTION XI APPENDIX VIII, SUPPLEMENT 11 TO PERFORMANCE DEMONSTRATION INITIATIVE (PDI)

Supplement 11 – Qualification Requirement for Full Structural Overlaid Wrought Austenitic Piping Welds	**PDI Program:** **The Proposed Alternative to Supplement 11 Requirements**
1 0 SPECIMEN REQUIREMENTS	
1.1 General. The specimen set shall conform to the following requirements.	
(b) The specimen set shall consist of at least three specimens having different nominal pipe diameters and overlay thicknesses. They shall include the minimum and maximum nominal pipe diameters for which the examination procedure is applicable. Pipe diameters within a range of 0.9 to 1.5 times a nominal diameter shall be considered equivalent. If the procedure is applicable to pipe diameters of 24 inch or larger, the specimen set must include at least one specimen 24 inch or larger but need not include the maximum diameter. The specimen set must include at least one specimen with overlay thickness within -0.1 inch to +0.25 inch of the maximum nominal overlay thickness for which the procedure is applicable.	**Alternative**: (b) The specimen set shall include specimens with overlays not thicker than 0.1 inch more than the minimum thickness, nor thinner than 0.25 inch of the maximum nominal overlay thickness for which the examination procedure is applicable. **Basis**: To avoid confusion, the overlay thickness tolerance contained in the last sentence was reworded and the phrase "and the remainder shall be alternative flaws" was added to the next to last sentence in paragraph 1.1(d)(1) .
(d) Flaw Conditions	
(1) Base metal flaws. All flaws must be cracks in or near the ~ butt weld heat-affected zone, open to the inside surface, and extending at least 75% through the base metal wall. Flaws may extend 100% through the base metal and into the overlay material; in this case, intentional overlay fabrication flaws shall not interfere with ultrasonic detection or characterization of the cracking. Specimens containing IGSCC shall be used when available.	**Alternative**: (1) ... must be in or… extending at least 75% through…intentional overlay fabrication flaws shall not interfere with ultrasonic detection or characterization of the base metal flaws. Specimens containing intergranular stress corrosion cracking shall be used when available. At least 70% of the flaws in the detection and sizing tests shall be cracks and the remainder shall be alternative flaws. Alternative flaw mechanisms, if used, shall provide crack-like reflective characteristics and shall be limited by the following: (a) The use of alternative flaws shall be limited to when the implantation of cracks produces spurious reflectors that are uncharacteristic of actual flaws. (b) Flaws shall be semi elliptical with a tip width of less than or equal to 0.002 inches. **Basis**: This paragraph requires that all base metal flaws be cracks and to extend at least 75% through the base metal wall. Implanting a crack requires excavation of the base material on at least one side of the flaw. While this may be satisfactory for ferritic materials, it does not produce a useable axial flaw in austenitic materials because the sound beam, which normally passes only through base material, must now travel through weld material on at least one side,

Supplement 11 – Qualification Requirement for Full Structural Overlaid Wrought Austenitic Piping Welds	PDI Program: The Proposed Alternative to Supplement 11 Requirements
	producing an unrealistic flaw response. To resolve this issue, the PDI program revised this paragraph to allow use of alternative flaw mechanisms under controlled conditions. For example, alternative flaws shall be limited to when implantation of cracks precludes obtaining an effective ultrasonic response, flaws shall be semi elliptical with a tip width of less than or equal to 0.002 inches, and at least 70% of the flaws in the detection and sizing test shall be cracks and the remainder shall be alternative flaws. To avoid confusion, the overlay thickness tolerance contained in paragraph 1.1(b) last sentence, was reworded and the phrase "and the remainder shall be alternative flaws" was added to the next to last sentence. Paragraph 1.1(d)(1) includes the statement that intentional overlay fabrication flaws shall not interfere with ultrasonic detection or characterization of the base metal flaws.
(e) Detection Specimens	
(1) At least 20% but less than 40% of the flaws shall be oriented within +/-20° of the pipe axial direction. The remainder shall be oriented circumferentially. Flaws shall not be open to any surface to which the candidate has physical or visual access. The rules of IWA-3300 shall be used to determine whether closely spaced flaws should be treated as single or multiple flaws.	**Alternative**: (1) At least 20% but less than 40% of the base metal flaws shall be oriented within +/-20° of the pipe axial direction. The remainder shall be oriented circumferentially. Flaws shall not be open to any surface to which the candidate has physical or visual access. **Basis**: The requirement for axially oriented overlay fabrication flaws was excluded from the PDI Program as an improbable scenario. Weld overlays are typically applied using automated GTAW techniques with the filler metal applied in a circumferential direction. Because resultant fabrication induced discontinuities would also be expected to have major dimensions oriented in the circumferential direction axial overlay fabrication flaws are unrealistic. The requirement for using IWA-3300 for proximity flaw evaluation was excluded; instead indications will be sized based on their individual merits.
(2) Specimens shall be divided into base and overlay grading units. Each specimen shall contain one or both types of grading units.	**Alternative**: (2) Specimens shall be divided into base metal and overlay fabrication grading units. Each specimen shall contain one or both types of grading units. Flaws shall not interfere with ultrasonic detection or characterization of other flaws. **Basis**: Inclusion of "metal" and "fabrication" provides clarification. Flaw identification is improved by ensuring flaws are not masked by other flaws.
(a)(1) A base grading unit shall include at least 3 inch of the length of the overlaid weld. The base grading unit includes the outer 25% of the overlaid weld and base metal on both sides. The base grading unit shall not include the inner	**Alternative**: (a)(1) A base metal grading unit includes the overlay material and the outer 25% of the original overlaid weld. The base metal grading unit shall extend circumferentially for at least 1 inch and shall start at the weld centerline

Supplement 11 – Qualification Requirement for Full Structural Overlaid Wrought Austenitic Piping Welds	PDI Program: The Proposed Alternative to Supplement 11 Requirements
75% of the overlaid weld and base metal overlay material, or base metal to-overlay interface.	and be wide enough in the axial direction to encompass one half of the original weld crown and a minimum of 0.50" of the adjacent base material. **Basis**: The phrase "and base metal on both sides," was inadvertently included in the description of a base metal grading unit, The PDI program intentionally excludes this requirement because some of the qualification samples include flaws on both sides of the weld. To avoid confusion several instances of the term "cracks" or "cracking" were changed to the term "flaws" because of the use of alternative Flaw mechanisms. Modified to require that a base metal grading unit include at least1inch of the length of the overlaid weld, rather than 3 inches.
(a)(2) When base metal cracking penetrates into the overlay material, the base grading unit shall include the overlay metal within 1 inch of the crack location. This portion of the overlay material shall not be used as part of any overlay grading unit.	**Alternative**: (a)(2) When base metal flaws penetrate into the overlay material, the base metal grading unit shall not be used as part of any overlay fabrication grading unit. **Basis**: Substituted terms provide clarification and are consistent with 1d(1) above. The PDI program adjusts for this conservative change for excluding this type grading unit.
(a)(3) When a base grading unit is designed to be unflawed, at least 1 inch of unflawed overlaid weld and base metal shall exist on either side of the base grading unit. The segment of weld length used in one base grading unit shall not be used in another base grading unit. Base grading units need not be uniformly spaced around the specimen.	**Alternative**: (a)(3) Sufficient unflawed overlaid weld and base metal shall exist on all sides of the grading unit to preclude interfering reflections from adjacent flaws. **Basis**: Modified to require sufficient unflawed overlaid weld and base metal to exist on all sides of the grading unit to preclude interfering reflections from adjacent flaws, rather than the 1 inch requirement.
(b)(1) An overlay grading unit shall include the overlay material and the base metal-to-overlay interface of at least 6 in^2. The overlay grading unit shall be rectangular, with minimum dimensions of 2 inch.	**Alternative**: (b)(1) An overlay fabrication grading unit shall include the overlay material and the base metal-to-overlay interface for a length of at least 1 inch **Basis**: The PDI program reduces the base metal-to-overlay interface to at least 1 inch (in lieu of a minimum of 2 inches) and eliminates the minimum rectangular dimension. This criterion is necessary to allow use of existing examination specimens that were fabricated in order to meet NRC Generic Letter 88-01. This criterion may be more challenging than the ASME Code because of the variability associated with the shape of the grading unit.
(b)(2) An overlay grading unit designed to be unflawed shall be surrounded by unflawed overlay material and unflawed base metal-to-overlay interface for at least 1 inch around its entire perimeter. The specific area used in one overlay	**Alternative**: (b)(2) Overlay fabrication grading units designed to be unflawed shall be separated by unflawed overlay material and unflawed base metal-to-overlay interface for at least 1 inch at both ends. Sufficient unflawed overlaid

Supplement 11 – Qualification Requirement for Full Structural Overlaid Wrought Austenitic Piping Welds	PDI Program: The Proposed Alternative to Supplement 11 Requirements
grading unit shall not be used in another overlay grading unit. Overlay grading units need not be spaced uniformly about the specimen.	weld and base metal shall exist on both sides of the overlay fabrication grading unit to preclude interfering reflections from adjacent flaws. The specific area used in one overlay fabrication grading unit shall not be used in another overlay fabrication grading unit. Overlay fabrication grading units need not be spaced uniformly about the specimen. **Basis**: Paragraph 1.1 (e)(2)(b)(2) states that overlay fabrication grading units designed to be unflawed shall be separated by unflawed overlay material and unflawed base metal-to-overlay interface for at least 1 inch at both ends, rather than around its entire perimeter.
(b)(3) Detection sets shall be selected from Table VIII-S2-1. The minimum detection sample set is five flawed base grading units, ten unflawed base grading units, five flawed overlay grading units, and ten unflawed overlay grading units. For each type of grading unit, the set shall contain at least twice as many unflawed as flawed grading units.	**Alternative**:...base metal grading units, ten unflawed base metal grading units, five flawed overlay fabrication grading units, and ten unflawed overlay fabrication grading units. For each type of grading unit, the set shall contain at least twice as many unflawed as flawed grading units. For initial procedure qualification, detection sets shall include the equivalent of three personnel qualification sets. To qualify new values of essential variables, at least one personnel qualification set is required. **Basis**: Clarified the guidance for initial procedure qualifications versus qualifying new values of essential variables.
(f) Sizing Specimen	
(1) The minimum number of flaws shall be ten. At least 30% of the flaws shall be overlay fabrication flaws. At least 40% of the flaws shall be cracks open to the inside surface.	**Alternative**: (1) The...least 40% of the flaws shall be open to the inside surface. Sizing sets shall contain a distribution of flaw dimensions to assess sizing capabilities. For initial procedure qualification, sizing sets shall include the equivalent of three personnel qualification sets. To qualify new values of essential variables, at least one personnel qualification set is required. **Basis**: Clarified the guidance for initial procedure qualifications versus qualifying new values of essential variables and is consistent with 1.1(d)(1) above..
(3) Base metal cracking used for length sizing demonstrations shall be oriented circumferentially.	**Alternative**: (3) Base metal flaws used...circumferentially. **Basis**: Clarified wording to be consistent with 1.1(d)(1) above.
(4) Depth sizing specimen sets shall include at least two distinct locations where cracking in the base metal extends into the overlay material by at least 0.1 inch in the through-wall direction.	**Alternative**: (4) Depth sizing specimen sets shall include at least two distinct locations where a base metal flaw extends into the overlay material by at least 0.1 inch in the through-wall direction. **Basis**: Clarified wording to be consistent with 1d(1) above.
2.0 Conduct of Performance Demonstration	
The specimen inside surface and identification shall be concealed from the candidate. All examinations shall be completed prior to grading the results and	**Alternative**: The specimen ...prohibited. The overlay fabrication flaw test and the base metal flaw test may be performed separately.

Supplement 11 – Qualification Requirement for Full Structural Overlaid Wrought Austenitic Piping Welds	PDI Program: The Proposed Alternative to Supplement 11 Requirements
presenting the results to the candidate. Divulgence of particular specimen results or candidate viewing of unmasked specimens after the performance demonstration is prohibited.	**Basis**: Clarified wording to describe process .
2.1 Detection Test.	
Flawed and unflawed grading units shall be randomly mixed. Although the boundaries of specific grading units shall not be revealed to the candidate, the candidate shall be made aware of the type or types of grading units (base or overlay) that are present for each specimen.	**Alternative**: Flawed…(base metal or overlay fabrication)…each specimen. **Basis**: Clarified wording similar to 1(e)2 above..
2.2 Length Sizing Test	
(d) For flaws in base grading units, the candidate shall estimate the length of that part of the flaw that is in the outer 25% of the base wall thickness.	**Alternative**: (d) For . . . base metal grading . . . 25% of the base metal wall thickness. **Basis**: Clarified wording for consistency and to be consistent with 1.1(d)(1) above.
2.3 Depth Sizing Test.	
For the depth sizing test, 80% of the flaws shall be sized at a specific location on the surface of the specimen identified to the candidate. For the remaining flaws, the regions of each specimen containing a flaw to be sized shall be identified to the candidate. The candidate shall determine the maximum depth of the flaw in each region.	**Alternative**: (a) The depth sizing test may be conducted separately or in conjunction with the detection test. (b) When the depth sizing test is conducted in conjunction with the detection test and the detected flaws do not satisfy the requirements of 1.1(f), additional specimens shall be provided to the candidate. The regions containing a flaw to be sized shall be identified to the candidate. The candidate shall determine the maximum depth of the flaw in each region. (c) For a separate depth sizing test, the regions of each specimen containing a flaw to be sized shall be identified to the candidate. The candidate shall determine the maximum depth of the flaw in each region. **Basis**: Clarified wording to better describe process.

Supplement 11 – Qualification Requirement for Full Structural Overlaid Wrought Austenitic Piping Welds	PDI Program: The Proposed Alternative to Supplement 11 Requirements
3.0 ACCEPTANCE CRITERIA	
3.1 Detection Acceptance Criteria	
Examination procedures, equipment, and personnel are qualified for detection when the results of the performance demonstration satisfy the acceptance criteria of Table Vlll-S2-1 for both detection and false calls. The criteria shall be satisfied separately by the demonstration results for base grading units and for overlay grading units.	**Alternative**: Examination procedures are qualified for detection when: a. All flaws within the scope of the procedure are detected and the results of the performance demonstration satisfy the acceptance criteria of Table VIII-S2-1 for false calls. b. At least one successful personnel demonstration has been performed meeting the acceptance criteria defined in (c). c. Examination equipment and personnel are qualified for detection when the results of the performance demonstration satisfy the acceptance criteria of Table Vlll-S2-1 for both detection and false calls. d. The criteria in (b) and (c) shall be satisfied separately by the demonstration results for base metal grading units and for overlay fabrication grading units. **Basis**: Clarified wording to better describe the difference between procedure qualification and equipment and personnel qualifications.
3.2 Sizing Acceptance Criteria	
(a) The RMS error of the flaw length measurements, as compared to the true flaw lengths, is less than or equal to 0.75 inch. The length of base metal cracking is measured at the 75% through-base-metal position.	**Alternative**: (a) The...base metal flaws is…75% though-base-metal position. **Basis**: Clarified wording to be consistent with 1.1(d)(1) above.
(b) All extensions of base metal cracking into the overlay material by at least 0.1 inch are reported as being intrusions into the overlay material.	**Alternative**: This requirement is omitted. **Basis**: The requirement for reporting all extensions of cracking into the overlay is omitted from the PDI Program because it is redundant to the RMS calculations performed in paragraph 3.2(c) and its presence adds confusion and ambiguity to depth sizing as required by paragraph 3.2(c). This also makes the weld overlay program consistent with the supplement 2 depth sizing criteria.

Enclosure 2

List of Regulatory Commitments

List of Regulatory Commitments

1. The following information will be submitted to the NRC within 14 days from the completion of the final UT on Catawba Unit 2. Also included in the results will be a discussion of any repairs to the overlay material and/or base metal and the reason for the repair.

   - A listing of flaw indications detected,
   - The disposition of all indications using the standards of ASME Section XI, IWB-3514-2 and/or IWB-3514-3 criteria, and if possible
   - The type and nature of the indications

2. Prior to entry into Mode 4 from the Catawba Unit 2 Spring 2009 refueling outage, Duke will submit to the NRC a summary of the results of the stress analyses, demonstrating that the preemptive FSWOLs will not hinder the components from performing their design function.