MITSUBISHI HEAVY INDUSTRIES, LTD.
16-5, KONAN 2-CHOME, MINATO-KU
TOKYO, JAPAN

November 5, 2008

Document Control Desk
U.S. Nuclear Regulatory Commission
Washington, DC 20555-0001

Attention: Mr. Jeffrey A. Ciocco,

Docket No. 52-021
MHI Ref: UAP-HF-08257

Subject: MHI's Responses to US-APWR DCD RAI No. 81-1253 Revision 0

References: 1) "Request for Additional Information No. 81-1253 Revision 0, SRP Section: 19-Probabilistic Risk Assessment and Severe Accident Evaluation," dated October 7, 2008

With this letter, Mitsubishi Heavy Industries, Ltd. ("MHI") transmits to the U.S. Nuclear Regulatory Commission ("NRC") a document as listed in Enclosures.

Enclosed is the responses to the RAIs contained within Reference 1.

Please contact Dr. C. Keith Paulson, Senior Technical Manager, Mitsubishi Nuclear Energy Systems, Inc. if the NRC has questions concerning any aspect of the submittal. His contact information is below.

Sincerely,

Y. Ogata

Yoshiki Ogata,
General Manager- APWR Promoting Department
Mitsubishi Heavy Industries, LTD.

Enclosures:

1. "Responses to Request for Additional Information No. 81-1253 Revision 0"

CC: J. A. Ciocco
C. K. Paulson

Contact Information
C. Keith Paulson, Senior Technical Manager
Mitsubishi Nuclear Energy Systems, Inc.
300 Oxford Drive, Suite 301
Monroeville, PA 15146
E-mail: ck_paulson@mnes-us.com
Telephone: (412) 373-6466

D081
NRO

Enclosure 1

UAP-HF-08257
Docket No. 52-021

Responses to Request for Additional Information
No.81-1253 Revision 0

November 2008

RESPONSE TO REQUEST FOR ADDITIONAL INFORMATION

11/5/2008

US-APWR Design Certification

Mitsubishi Heavy Industries

Docket No.52-021

RAI NO.: **NO.81-1253 REVISION 0**

SRP SECTION: **19 – Probabilistic Risk Assessment and Severe Accident Evaluation**

APPLICATION SECTION: **19.1**

DATE OF RAI ISSUE: **10/7/2008**

QUESTION NO. : 19-116

The definition of top event EFA (emergency feedwater system) in the total loss of component cooling water event tree (LOCCW) states that both motor-driven (M-D) EFW pumps are assumed to be unavailable due to loss of room cooling. Similarly, event EFA in the partial loss of component cooling water event tree (PLOCW) states that one M-D EFW pump is assumed to be unavailable due to loss of room cooling. However, the documentation in both Chapter 3 and Chapter 6 states as the input event (fault tree), EFW-SL, for both cases (this fault tree does not assume unavailability of M-D pumps) and the success criteria are stated as 2 of 4 (instead of 2 of 2 and 2 of 3, respectively). It appears (Attachment 6A.5A&B) that different fault trees exist for LOCCW and PLOCW (fault trees EFW-SL-LC and EFW-SL-PC, respectively) but these fault trees are not included in the submittal and no discussion is provided to explain how these fault trees are obtained from the included EFW-SL fault tree. Also, no discussion is provided on the CCF probabilities that are used given LOCCW or PLOCW. Please explain.

ANSWER:

(1)Success criteria

The number of redundant train written in the success criteria tables in chapter 3 and 6 of the PRA technical report (MUAP-0730 R1) does not consider the unavailability of systems and components given loss of its support system due to the initiating event. For the case for LOCCW and PLOCW, which the staff has pointed out, the motor driven EFW pumps themselves have not failed and therefore in the success criteria table it is correctly identified that there are four pumps total. The required number for success (2) is not met if pumps fail directly or due to dependency failures such as room cooling loss. The EFW pumps that are assumed to be unavailable during the loss of CCW event due to loss of room cooling dependency is modeled in the fault tree.

For the LOCCW and PLOCW initiating events, fault tree "EFW-SL" is used for event heading EFA with different boundary conditions reflecting the impact of the initiating event. "EFW-SL-LC" and "EFW-SL-PC" are names of analysis cases for fault tree "ESW-SL" taking in considering the impact of initiating event of LOCCW and PLOCW respectively. Boundary conditions applied to the fault trees are shown in Table 19-116.1. For the two initiating events, gates representing the failure of component cooling water system (CWS) and essential service water system (SWS) are set to "true" in order to reflect the impact of the initiating event. Table 6A.5-11 in chapter 6 of the PRA technical report summarizes the analysis conditions applied to the fault trees used in the event trees.

(2)Treatment of common cause failure (CCF)

CCF probabilities are estimated using MGL parameters for CCF group size equal to the number of redundant components regardless of its availability. The CCF group size applied does not vary with the number of components that become unavailable due to the initiating event. However, the CCF probability that would in failure of the function is quantified reflecting the success criteria of the function. This is accomplished by the fault tree structure and the applied boundary conditions for gates and basic events.

Table 19-116.1 Relation of Fault Tree and Fault Tree analysis case and BC (FT of EFW at LOCCW and PLOCW Events)

Initiating Event (Event Tree)	Event Tree Heading Identifier	Fault Tree Identifier	Fault Tree Analysis Case	Boundary Condition
Loss of Component Cooling Water	EFA	EFW-SL	EFW-SL-LC	Gate: CWS-00A True
				Gate: CWS-00B True
				Gate: CWS-00C True
				Gate: CWS-00D True
				Gate: SWS-01A True
				Gate: SWS-01B True
				Gate: SWS-01C True
				Gate: SWS-01D True
Partial Loss of Component Cooling Water	EFA	EFW-SL	EFW-SL -PC	Gate: CWS-00A True
				Gate: CWS-00B True
				Gate: SWS-01A True
				Gate: SWS-01B True

Impact on DCD
There is no impact on DCD.

Impact on COLA
There is no impact on COLA.

Impact on PRA
There is no impact on PRA.

RESPONSE TO REQUEST FOR ADDITIONAL INFORMATION

11/5/2008

US-APWR Design Certification

Mitsubishi Heavy Industries

Docket No.52-021

RAI NO.: **NO.81-1253 REVISION 0**

SRP SECTION: **19 – Probabilistic Risk Assessment and Severe Accident Evaluation**

APPLICATION SECTION: **19.1**

DATE OF RAI ISSUE: **10/7/2008**

QUESTION NO. : 19-117

The top event HIC (High Head Injection System) in the partial loss of component cooling water event tree (PLOCW) has HPI-SL as input event (fault tree). However, this fault tree does not appear to account for the unavailability of two High Head Injection System (HHIS) pumps due to the partial loss of CCW. Also, the success criterion for HHIS is listed as 1 of 4 pumps in Table 3.2.13.3-1. Please explain. The same question applies, also, to top event FNA7 (Alternate Containment Cooling, which requires supplying CCW through the containment fan cooler system). Please explain.

ANSWER:

The success criterion in Table 3.2.13.3-1 for the HHIS during PLOCW is written as 1 of 4 pumps, not considering the unavailability of two pumps for the same reason answered for question 19-116. However, the fault tree used for PLOCW is "HPI-SL" with boundary conditions considering the unavailability of CCW trains cause by the initiating event. Specifically, gates CWS-00A, CWS-00B, SWS-01A and SWS-01B are set to "true", which sets trains A and B of the CCWS to be unavailable, during the event tree quantification for PLOCW event. These gates are linked to the frontline systems that are dependant on the CCW and thus the two HPI pumps are considered unavailable due to loss of support systems. Boundary conditions applied to the HPIS fault tree for PLOW event are shown summarized in Table 19-117.1.

Table 6A.1-10 was added in the attachment 6 of the PRA technical report (MUAP-0730 R1) to indicate the fault tree and associated analysis conditions considered for each event headings.
The impact of initiating events to mitigation systems are summarized in Table 4.2.4 of PRA technical report chapter 4.

Success criteria for alternate containment cooling shown in chapter 3 also do not consider the impact of loss of support systems on the number of redundant frontline system trains. Similar to high head

injections system case, loss of support system caused by the initiating event is modeled by applying of boundary condition to the fault trees. Boundary conditions applied to the alternate containment cooling fault tree for PLOW event are shown summarized in Table 19-117.2.

Table 19-117.1 Relation of Fault Tree and Fault Tree analysis case and BC (FT of HHIS at PLOCW Event)

Initiating Event (Event Tree)	Event Tree Heading Identifier	Fault Tree Identifier	Fault Tree Analysis Case	Boundary Condition
Partial Loss of Component Cooling Water	HIC	HPI -SL	HPI -SL -PC	Gate: CWS-00A True
				Gate: CWS-00B True
				Gate: SWS-01A True
				Gate: SWS-01B True

Table 19-117.2 Relation of Fault Tree and Fault Tree analysis case and BC (FT of Alternate Containment Cooling at PLOCW Event)

Initiating Event (Event Tree)	Event Tree Heading Identifier	Fault Tree Identifier	Fault Tree Analysis Case	Boundary Condition
Partial Loss of Component Cooling Water	FNA7	NCC	NCC-PC	Gate: CWS-00A True
				Gate: CWS-00B True
				Gate: SWS-01A True
				Gate: SWS-01B True

Impact on DCD
There is no impact on DCD.

Impact on COLA
There is no impact on COLA.

Impact on PRA
There is no impact on PRA.

RESPONSE TO REQUEST FOR ADDITIONAL INFORMATION

11/5/2008

US-APWR Design Certification

Mitsubishi Heavy Industries

Docket No.52-021

RAI NO.: **NO.81-1253 REVISION 0**

SRP SECTION: **19 – Probabilistic Risk Assessment and Severe Accident Evaluation**

APPLICATION SECTION: **19.1**

DATE OF RAI ISSUE: **10/7/2008**

QUESTION NO. : 19-118

The loss of offsite power (LOOP) event tree (Figure 3.2.14-1) shows as successful the following sequences: #53 in Sheet 1, #54 in Sheet 2, # 45 and #47 in Sheet 3, and # 14 and #16 in Sheet 4. The staff believes that these sequences either lead to core damage or need to be further developed. Please explain.

ANSWER:

For all of the sequences indicated in the question, the success probability of event heading "RCP seal LOCA" is set to zero, in consideration of postulated loss of component cooling water (CCW) system in the sequence. The frequencies of these sequences are therefore calculated to be zero. Accordingly, these sequences are actually excluded from the PRA.

A branch for event heading "RCP seal LOCA" was allocated in these sequences in order to make the basic event "RCP----SEAL", which indicates that RCP seal LOCA has occurred, appear in the cut sets of these sequences. This makes easy to estimate the contribution of RCP seal LOCA event to the CDF.

Impact on DCD
There is no impact on DCD.

Impact on COLA
There is no impact on COLA.

Impact on PRA
This discussion will be incorporated in the PRA report. There is no impact on PRA results.

RESPONSE TO REQUEST FOR ADDITIONAL INFORMATION

11/5/2008

US-APWR Design Certification

Mitsubishi Heavy Industries

Docket No.52-021

RAI NO.: **NO.81-1253 REVISION 0**

SRP SECTION: **19 – Probabilistic Risk Assessment and Severe Accident Evaluation**

APPLICATION SECTION: **19.1**

DATE OF RAI ISSUE: **10/7/2008**

QUESTION NO. : 19-119

The anticipated transients without scram (ATWS) event tree assumes no core damage occurs given that all of the following four conditions apply: (1) there is not an unfavorable moderator temperature coefficient (MTC) present, (2) automatic turbine trip occurs, (3) all four pressurizer safety valves (PSVs) open, and (4) all four emergency feedwater (EFW) pumps deliver water to the steam generators (SGs). However, the staff notices that the US-APWR ATWS event tree does not model the need for emergency boration and reactor coolant makeup that is considered in operating reactor PRAs. In addition, some potential failures, such as stuck open PSV's and consequential SG tube ruptures, are not modeled or discussed. Please explain.

ANSWER:

Under the event of failing to automatically insert control rods, if the MTC is in a range to prevent excessive pressure rise, there will be time available for manual actions to insert control rods or to initiate emergency boration in order to mitigate the ATWS event. Sequences 3 and 7 in the ATWS event tree represent this scenario.

1.Emergency boration and manual trip
The probability of the charging injection system to be unavailable due to mechanical failure is expected to be approximately 3E-4 per demand, which is the unreliability of the charging injection system during very small leak LOCA. Since there is sufficient time for the operator to perform action, the human error probability to fail emergency injection is assumed to be lower than 0.01. Accordingly the probability of emergency boration to fail is estimated to be 0.01, which is one order lower than the value assumed for the MTC event heading. The PRA considers that by assuming a 0.1 failure probability for MTC, the failure of emergency boration or manual trip is not necessary to be explicitly modeled.

2. Stuck open pressurizer safety valve

When the reactor protection system (RPS) fails to trip the plant, pressurizer safety valves can possibly open. Four pressurizer safety valves are installed in the US-APWR and therefore the probability that any one of the safety valve to stuck open is 2.8E-4 /demand as described in the Attachment 6A.14.8 of the PRA technical report (MUAP-07030 R1).

Two scenarios can be considered for cases where the pressurizer safety valves open.

Scenario 1: The reactor is trip by diverse actuation system (DAS)

Sequences 2 and 5 in the ATWS event tree falls into this scenario. Frequency of this scenario, which is the sum of the two sequences, is 3E-6 /ry. The frequency of this scenario accompanying stuck open safety valve will be approximately 1E-10 /ry. Moreover, there is a possibility to mitigate the stuck open safety valve LOCA event utilizing the DAS.

Scenario 2: Excessive RCS overpressure is prevented by MTC

The probability of safety valves to stick open is less than 1/100 of the failure probability assumed for MTC. CDF of safety valve stuck open LOCA after success of MTC is negligible compared to CDF caused by severe MTC, and therefore, safety valve stuck open is not modeled.

3. Consequential SGTR

Taking into account the high pressure in the secondary side of the SG, the SG tube can withstand pressure rise up to the ultimate pressure of the RCS. The PRA therefore considers that the RCS piping will break first when excessive pressure rise in the RCS occur during ATWS. Accordingly, the plant damage state (PDS) assigned to core damaged scenarios for ATWS consider a large break in the primary system with intact containment (no bypass).

Impact on DCD

There is no impact on DCD.

Impact on COLA

There is no impact on COLA.

Impact on PRA

This description will be added in the next revision of the PRA report.

There is no impact on PRA results.

RESPONSE TO REQUEST FOR ADDITIONAL INFORMATION

11/5/2008

US-APWR Design Certification

Mitsubishi Heavy Industries

Docket No.52-021

RAI NO.: **NO.81-1253 REVISION 0**

SRP SECTION: **19 – Probabilistic Risk Assessment and Severe Accident Evaluation**

APPLICATION SECTION: **19.1**

DATE OF RAI ISSUE: **10/7/2008**

QUESTION NO. : 19-120

In Chapter 6 of the US-APWR PRA (MUAP 07030) there are four fault trees discussed (HPI-LL, HPI-ML, HPI-SL and HPI-FAB). However, in Attachment 6A.1.B there are five fault trees presented (HPI-LL, HPI-ML, HPI-SL, HPI-FAB and FAB) and in Attachment 6A.1.A (minimal cut sets) there are thirteen fault trees listed. Please provide a discussion in Chapter 6 of the PRA explaining the information provided in the two Attachments to Chapter 6. In addition, the provided fault trees in Attachment 6A.1.B do not include common cause failures and some human errors (e.g., HPIOO02MP and HPIOO02MP-DP2) are not defined or included in the database. Please explain.

ANSWER:

Description of fault tree "FAB" as well as its minimal cut sets are documented in Attachment 6A.7 "Pressurizer control" in revision 1 of the PRA technical report.

For some of the fault trees provided in Attachment 6A.1.B, more than one analysis case is performed by applying various boundary conditions, which represent the impact of the initiating event on the fault tree. For this reason, the number of analysis cases (minimal cut sets) shown in Attachment 6A.1.A is greater than the number of fault trees provided in Attachment 6A.1.B.

In the PRA technical report revision 1, tables are added to link the fault trees and the fault tree analysis cases provided in the Attachments (Table 6A.1-10 in the case for attachment 6A.1). Information on the boundary conditions applied to the fault tree analysis cases are also provided in these additional tables.

Common cause failure does not appear in the fault trees since common cause failure (CCF) events is modeled using a CCF group function of the RiskSpectrum software to quantify fault trees and event

trees. The CCF group function of the RiskSpectrum software is described in response to RAI#25, question 19-40.

Human error basic events, HPIOO02MP and HPIOO02MP-DP2 are not used in the quantification. Fault trees with top gates named HPI-SL-LC and HPI-SL-LC-DP2 were actually not used in the quantification, and therefore, these gates will be removed from the PRA technical report during the next revision.

Impact on DCD
There is no impact on DCD.

Impact on COLA
There is no impact on COLA.

Impact on PRA
MHI will change description in PRA technical report at next revision.

RESPONSE TO REQUEST FOR ADDITIONAL INFORMATION

11/5/2008

US-APWR Design Certification

Mitsubishi Heavy Industries

Docket No.52-021

RAI NO.: **NO.81-1253 REVISION 0**

SRP SECTION: **19 – Probabilistic Risk Assessment and Severe Accident Evaluation**

APPLICATION SECTION: **19.1**

DATE OF RAI ISSUE: **10/7/2008**

QUESTION NO. : 19-121

The event HPIPNELTESTCA (Table 6A.1-7) is described as "Piping non-service water system external leak L close side." Please clarify this description and explain what is meant by "non-service water system" (both in general terms and as it relates to the high head injection system (HHIS)).

ANSWER:

The term "non-service water system" is used to indicate a system that is not the essential service water system. NUREG/CR-6928 "Industry-Average Performance for Components and Initiating Events at U.S. Commercial Nuclear Power Plants" provides two types of pipe failure rates, failure rates for the emergency service water (ESW) system and for non-ESW systems. Basic event HPIPNELTESTCA represents failure of piping in HHIS and the failure rate for non-ESW is applied to this event.

Basic Events HPIPNELTESTCA, B,C,D represent external leak event for the piping boxed in the bold dashed line in Figure 19-121.1. The values used to estimate the probability of the event are shown in Figure 19-121.1.

Table 19-121.1 Detail of Piping External Leak Frequency Data

Basic Event ID	Piping External Leak Large Failure rate [/(feet · hr)][(1)]	Piping Length [feet]	Mission Time [hr]	(Piping Length)x(Mission Time) [feet · hr] [(2)]	Mean[(3)]
HPIPNELTESTCA	2.5E-11[(4)]	7.3E+01	2.4E+01	1.8E+03	4.4E-08
HPIPNELTESTCB	2.5E-11[(4)]	7.3E+01	2.4E+01	1.8E+03	4.4E-08
HPIPNELTESTCC	2.5E-11[(4)]	7.3E+01	2.4E+01	1.8E+03	4.4E-08
HPIPNELTESTCD	2.5E-11[(4)]	7.3E+01	2.4E+01	1.8E+03	4.4E-08

Note (1): This parameter is described as "failure rate" in Table 6A.1-7 in the PRA technical report.
Note (2): In the fault tree quantification tool, this value is inputted as mission time along with the failure rate of external leak.
Note (3): Calculated by (failure rate)x(piping length)x(mission time).
Note (4): Failure rate reported in Table 5-1 of NUREG/CR-6928.

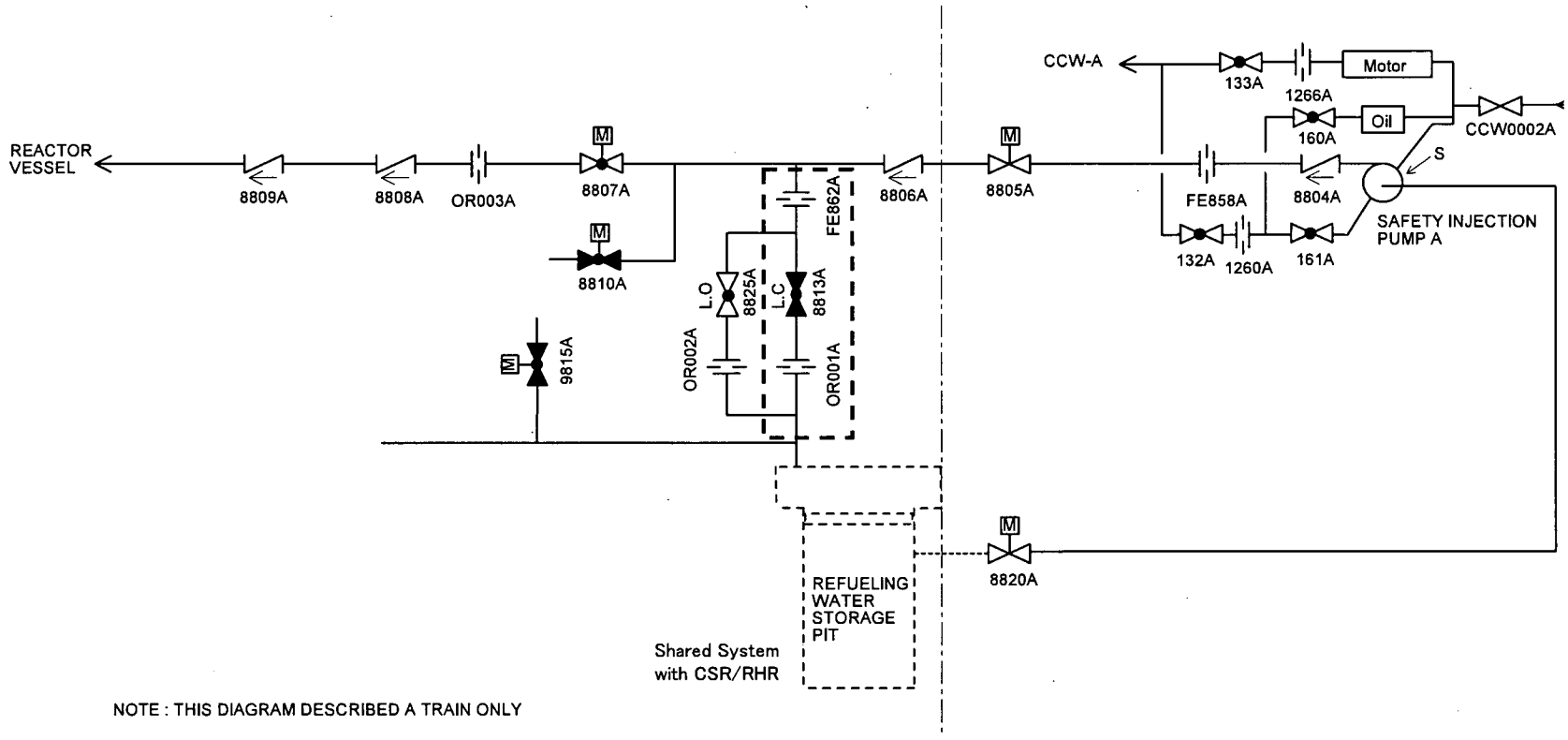

Figure 19-121.1 High Head Injection System Simplified System Diagram

Impact on DCD
There is no impact on DCD.

Impact on COLA
There is no impact on COLA.

Impact on PRA
There is no impact on PRA.

RESPONSE TO REQUEST FOR ADDITIONAL INFORMATION

11/5/2008

US-APWR Design Certification

Mitsubishi Heavy Industries

Docket No.52-021

RAI NO.: **NO.81-1253 REVISION 0**

SRP SECTION: **19 – Probabilistic Risk Assessment and Severe Accident Evaluation**

APPLICATION SECTION: **19.1**

DATE OF RAI ISSUE: **10/7/2008**

QUESTION NO. : 19-122

It is stated (page 6-2 of the PRA report) that for standby fluid systems that require fluid flow after demand, plugging during the 24-hour mission time is modeled. However, no common cause failure to plug was considered for the containment isolation motoroperated valves (MOVs) MOV-001A,B,C,D (in PRA labeled as 8820A,B,C,D) located at the suction of the high head safety injection (HHSI) pumps downstream from the refueling water storage pit (RWSP). Since the RWSP is located inside the containment, unlike in operating reactor designs, it seems reasonable to assume that particulates, insulation and other debris can accumulate in the RWSP following a LOCA and increase the individual and common cause plugging probabilities of components such as MOV- 001A,B,C,D as compared to the equivalent high pressure safety injection (HPSI) systems at operating PWR designs. Please provide information to justify the assumption that the plugging rate of MOV-001A,B,C,D can be based on operating reactor experience and that the CCF due to plugging of two or more of these valves is negligible.

ANSWER:

The RWSP debris strainers are made of stainless steel and use perforated plates in a layered disc with 0.066 inch diameter hole, as discussed in Table 6.2.2-2 of DCD Chapter 6 and technical report "US-APWR Sump Strainer Performance, MUAP-08001-P, Rev. 1, September 2008". This design prevents buildup of debris at downstream locations such as HPSI throttle valves and containment spray nozzle openings. The PRA therefore considers that the in-containment RWSP design has small impact on plugging probabilities in valves and operating reactor experience is applicable to the US-APWR. For the same reason, CCF due to plugging in valves cause by debris flowing from the RWSP is also considered to be unlikely to occur, and therefore is not modeled in the PRA.

Impact on DCD
There is no impact on DCD.

Impact on COLA
There is no impact on COLA.

Impact on PRA
This discussion will be incorporated in the PRA report. There is no impact on PRA.

RESPONSE TO REQUEST FOR ADDITIONAL INFORMATION

11/5/2008

US-APWR Design Certification

Mitsubishi Heavy Industries

Docket No.52-021

RAI NO.: **NO.81-1253 REVISION 0**

SRP SECTION: **19 – Probabilistic Risk Assessment and Severe Accident Evaluation**

APPLICATION SECTION: **19.1**

DATE OF RAI ISSUE: **10/7/2008**

QUESTION NO. : 19-123

It is stated (Section 6.1.2.3.1 of the PRA document), without any explanation or justification, that "Common cause failures across systems and across units are not included." The staff believes that common cause failure (CCF) should be considered in the case of same or similar components across systems and across units, especially those located in same plant areas. For example, what is the justification for not considering CCF among check valves in the high head injection (HHSI) and accumulator injection lines?

ANSWER:

The statement in Section 6.1.2.3.1 of the PRA document is based on this consideration of the CCF modeling policy, which is standard CCF modeling practice.

In general a set of components should be defined as a common cause component group when they are of the same component type (pumps, valves, etc.), AND when they meet the following conditions:

1. *Same initial conditions (i.e., normally open, normally closed, energized, deenergized) and operating characteristics (normally running, standby). One valve that is normally open and another valve which is normally closed should not be included as a common cause component group.*
2. *Same use or function such as system isolation, flow modulation, parameter sensing, motive force, etc. For example, a check valve in the discharge lines of the safety injection system (which provides system isolation) and a check valve that follows a pump should not be included in the same common cause component group.*
3. *Same failure mode (failure to open on demand, failure to start on demand, etc.). A normally operating pump that fails to run and a standby pump that fails to start and run should not be included in the same common cause component group. However, two similar standby pumps that both fail to start and run may be included in the same group.*

4. *Same minimal cutset. Common cause failures are only significant in the estimation of CDF or LERF when the affected components are in the same minimal cutset. Hence if multiple components show up only in different cutsets, they need not be included in the common cause analysis. However, if the multiple components meeting these criteria appear in the same cutset they should be considered for inclusion. Care should be exercised to ensure that cutset truncation does not lead to invalid conclusions as to the logical relationships of the components.*

Check valves in accumulator, HHIS, and other systems are in diverse configuration because:

- The accumulator does not have any pumps to drive upon a failed closed check valve but other systems have pumps so the forces acting on the valves to open them (even if the valves are similar) are different
- The duty cycles in the systems are different. They are cycled at different times when the systems are tested.
- Maintenance practices including testing may also be different.

Common cause failure between the check valves in accumulator and HHIS is therefore not model in the PRA.

Impact on DCD
There is no impact on DCD.

Impact on COLA
There is no impact on COLA.

Impact on PRA
This description will be added in the next PRA technical report update. There is no impact on PRA.

RESPONSE TO REQUEST FOR ADDITIONAL INFORMATION

11/5/2008

US-APWR Design Certification

Mitsubishi Heavy Industries

Docket No.52-021

RAI NO.: **NO.81-1253 REVISION 0**

SRP SECTION: **19 – Probabilistic Risk Assessment and Severe Accident Evaluation**

APPLICATION SECTION: **19.1**

DATE OF RAI ISSUE: **10/7/2008**

QUESTION NO. : 19-124

The unavailability of a high head safety injection (HHSI) system pump due to outage for test and maintenance was based on operating reactor experience and assumed to be 4E-3, which corresponds to about 1.5 days per year. However, operating plants have less HPSI pumps and, therefore, more strict TS requirements than the US-APWR. For example, the US-APWR TS require only 3 of the 4 HHSI pumps to be operable and if only two trains are operable, the completion time (CT) for restoring a third train to operable status is 72 hours. Therefore, it is reasonable to assume that the average outage time per pump is less for operating reactors than it is for US-APWR. An investigation is needed to address the applicability of operating experience to the assumed outage times for US-APWR for all important equipment modeled in the PRA in the light of design and operational differences, such as higher redundancy and less strict TS requirements. Please discuss.

ANSWER:

It is more likely that the actual out of service time will be determined by failure type and repair time with an expectation that the newer design pumps will experience higher reliability. The times assumed are also expected to be impacted by regulations such as MSPI and derivative requirements that impact unavailability monitoring. For this reason, the US-APWR PRA considered the generic unavailability data to be applicable to evaluate the baseline CDF. To assess the impact of longer out of service time, sensitivity studies have been performed and documented in chapter 18, section 18.3.1 of the PRA technical report. The CDF is estimated to be 5.0E-6 /ry postulating one safety train out of service throughout the reactor year. Based on this result, it can be expected that if each safety train is out of service for 7 days per year, the CDF is 1.5E-6 /ry.

Impact on DCD
There is no impact on DCD.

Impact on COLA
There is no impact on COLA.

Impact on PRA
The basis of applying the generic data for unavailability will be added in the next revision of the PRA technical report.

RESPONSE TO REQUEST FOR ADDITIONAL INFORMATION

11/5/2008

US-APWR Design Certification

Mitsubishi Heavy Industries

Docket No.52-021

RAI NO.: **NO.81-1253 REVISION 0**

SRP SECTION: **19 – Probabilistic Risk Assessment and Severe Accident Evaluation**

APPLICATION SECTION: **19.1**

DATE OF RAI ISSUE: **10/7/2008**

QUESTION NO. : 19-125

The basic events HPIMVFC8820A, B, C, D (Table 6A.1-7 of the PRA report) represent single failures to "control" the high head safety injection (HHSI) system pump suction isolation valves MOV-001A, B, C, D (labeled as valves 8820A, B, C, D in the PRA report). These events are not shown in the system fault trees of Attachment 6A and do not appear in any of the reported minimal cutsets. Furthermore, as the system information provided in Section 6A.1.1 of the PRA report indicates, the DVI line isolation valves MOV-011A, B,C, D have throttling capability which can control the flow downstream of each of the four DVI lines inside the containment. However, no failure to control these valves is modeled in the PRA. In addition, no common cause failure to "control" was considered. Please discuss the nature and mechanism of these failure to "control" events, whether such a failure should be considered for MOV-011A, B,C, D, and whether CCF for the failure to "control" events should be added.

ANSWER:

Basic events HPIMVFC8820A, B, C, D are modeled as failure cause of the refueling water storage pit (RWSP) described in Attachment 6A.14.3. If an external leak in the HHSI piping occurs at an elevation lower than the RWSP, water may be drained out from the RWSP. To prevent loss of RWSP inventory under occurrence of such leaks, HHSI system pump suction isolation valves MOV-001A, B, C, D will be closed. These isolation valves were therefore modeled for both systems HHSI system and the RWSP.

Valves MOV-001A, B, C, D are isolation valves that do not have capability to control flow rate. Since consideration of "failure to control" in not necessary for these isolation valves, these basic events will be removed from the fault tree.

Failure mode "failed to control" should be considered for motor operated valves that have (1) capability to control flow and (2) Adequate control is essential for the success of the system to perform its function.

Motor operated valves credited in the PRA that meets these criteria are the following two series of valves.

- emergency feed water flow control valves (EFS-MOV-017 A,B,C,D)
- main steam relief valves (NMS-MOV-508 A,B,C,D)

Failure to control the main steam relief valves were not modeled in the PRA. The PRA will be amended to include this failure mode during the next PRA update.

In the PRA model "failure to control" failure mode has been considered for some motor operated valves that do not have capability or demand to control flow. Basic events for these failure modes will be removed from the fault tree during the next PRA update. Throttle valves in the DVI line and the RHR cold leg injection line do not require flow regulation function during accidents and are not controlled during the mission time. Consideration of the "failure to control" failure mode for these valves are therefore unnecessary.

Although there are no reported common cause failure (CCF) data or CCF category, possibility of CCF to occur on the motor operated valves that result in failure to regulate the flow cannot be excluded. Such failure may occur by failure or fault in drive mechanism, or the failure in control circuit. CCF for "failure to control" motor operated valves will be considered in the PRA model. Since there are no CCF parameters for this failure mode, generic MGL parameters reported in NUREG/CR-5485 will be applied. Consideration of CCF to control throttle valves have small impact on the PRA result and will significantly change the risk profile.

Changes to the PRA model discussed in this response will be incorporated in the next PRA update.

Impact on DCD
There is no impact on DCD.

Impact on COLA
There is no impact on COLA.

Impact on PRA
Changes to the PRA model will be incorporated in the next PRA technical report update.

RESPONSE TO REQUEST FOR ADDITIONAL INFORMATION

11/5/2008

US-APWR Design Certification

Mitsubishi Heavy Industries

Docket No.52-021

RAI NO.: **NO.81-1253 REVISION 0**

SRP SECTION: **19 – Probabilistic Risk Assessment and Severe Accident Evaluation**

APPLICATION SECTION: **19.1**

DATE OF RAI ISSUE: **10/7/2008**

QUESTION NO. : 19-126

The information provided in Chapter 6 "System Analysis" of the PRA report on the assumed testing intervals in calculating failure probabilities is sparse. For each system discussed in Chapter 6, a list of the testing intervals for all the system's equipment modeled in the PRA is needed. Additional information, such as valve position indication and alarming features available to the operator in the control room, that are credited in the PRA should also be included.

ANSWER:

Test intervals of equipments that are controlled by the technical specification (TS) are basically 3 months, which is the same as the standard TS. For components that have longer test intervals and special care is taken, the assumed test interval is written in attachment 6A of the PRA technical report for each system. US-APWR PRA applies NUREG/CR-6928 "Industry-average performance for components and initiating events at U.S. commercial nuclear power plants" as the primary data source for component unreliability. Unreliability data of failure upon demand include both failures during standby and failure that occur at demand, based on data with wide range of testing intervals. Therefore, testing interval was not used in calculation of reliability of equipments for which NUREG/CR-6928 data was applied.
Test intervals used for calculation of the unreliability of the equipment are all listed in the tables in Attachment 6A. List of test interval that have technical basis will be added for each system in the next revision of PRA technical report. For equipments that are neither subjected to the TS nor have the test interval been determined at this stage, but have significant impact on risk, the test interval will be controlled by the reliability assurance program (RAP).

The valve position indication are credited for motor operated valves that need to maintain there position during standby. Normally opened motor operated valves in the safety injection system, both valves in the pump suction line and the discharge line, takes credit for position indication in the control room. The

PRA takes credit for operator to notice changes of the valve position caused by spurious actuation of these motor operated valves.
If operator action is not taken credit, the probability of a valve to be in an incorrect position due to spurious actuation is 4.5E-5, assuming a three month test interval and failure rate 4.0E-8 /hr for spurious actuation. This probability is less than 1/30 of the probability of a motor driven pump to fail on demand. Therefore the impact on taking credit for valve position monitoring is small to the system reliability.

Impact on DCD
There is no impact on DCD.

Impact on COLA
There is no impact on COLA.

Impact on PRA
List of test interval will be added for each system in the next revision of PRA technical report.

RESPONSE TO REQUEST FOR ADDITIONAL INFORMATION

11/5/2008

US-APWR Design Certification

Mitsubishi Heavy Industries

Docket No.52-021

RAI NO.: **NO.81-1253 REVISION 0**

SRP SECTION: **19 – Probabilistic Risk Assessment and Severe Accident Evaluation**

APPLICATION SECTION: **19.1**

DATE OF RAI ISSUE: **10/7/2008**

QUESTION NO. : 19-127

The high head safety injection (HHSI) system includes several normally open motor-operated valves (MOVs) in each of the four independent trains of the system. These valves must remain open for the successful injection of makeup water through the associated direct vessel injection (DVI) lines. In the US-APWR PRA, the failure of these valves to remain open was modeled by two kinds of basic events: (1) failure of the associated limit switch (e.g., event HPILSFF8805A) and (2) failure by "mis-closing" (e.g., event HPIMVCM8805A). The probability of the first kind of failures was calculated based on an exposure time for the limit switches of three months (i.e., equal to the testing interval). However, the probability of the second kind of failures was calculated based on an exposure time for valve "mis-closing" of 24 hours (i.e., the system's mission time in mitigating accidents). Please define a valve "mis-closing" failure and explain the basis for the assumed exposure time of 24 hours instead of the testing interval.

ANSWER:

Failure of the normally open motor-operated valves to maintain open can occur in either of the cases:

(a) Operator inadvertently closes the valve (human error) after test or maintenance, and operators do not notice misalignment due to failure of the limit switch.

(b) The motor operated valve spuriously closes prior to the initiating event, and operator can not notice misalignment due to failure of the limit switch.

(c) The motor operated valve spuriously closes during the mission time.

Probability of case (a) is considered negligible since the reliability of the limit switch just after test and maintenance is high and the misalignment can be detected. Case b can happen when a combination of spurious actuation of valve to open and failure of limit switch occur the during test interval.

The probability of case (b) is estimated as follows:
Probability that a valve spuriously closes t hours after test and maintenance, and the limit switch is in false state at that time is estimated as follows:

$$\int_0^t \lambda_V \lambda_L t dt = \frac{1}{2} \lambda_V \lambda_L t^2$$

λ_V : Failure rate of valve (spurious actuation) . λ_V =4.0E-8 /hr
λ_L : Failure rate of limit switch. λ_L=4.2E-6 /hr

The mean probability P of a valve to be maintained open due to spurious actuation of the valve and the failure of the limit switch can be estimated as follows:

$$P = \frac{1}{T} \int_0^T \frac{1}{2} \lambda_V \lambda_L t^2 dt = \frac{1}{6} \lambda_V \lambda_L T^2$$

T :Test interval

Applying the failure rate reported in PRA technical report and the 3 month test interval to the equation above, the probability of case b. is estimated to be 1.4E-7. Regarding case (c), the probability of spurious operation of the valve during the mission time is 9.6E-7.

Case (c), which is spurious operation of valve during the 24 mission time, is the dominant cause of the motor-operated valves to be in an unlikely position during the mission time. The PRA therefore represented the failure of the valves to be maintained open by the event of spurious operation during the mission time.

Basic events of limit switch were intended to be removed from the fault tree. However, some basic events such as HPILSFF8805A were inadvertently left in the model. These basic events will be removed during the next PRA update. The impact of this change to the result is small.

The description "mis-closing" was used for events which the valve fail to maintain closed due to spurious operation. This term is confusing and therefore the description will be amended in the next PRA update.

Impact on DCD
There is no impact on DCD.

Impact on COLA
There is no impact on COLA.

Impact on PRA
The description "mis-closing" used for basic events will be amended in the next PRA technical report revision. Basic events for limit switch failure will also be removed from the model.
Description on the treatment of limit switch failure will be added in the PRA technical report.