CHG. LET.	DESCRIPTION	DATE	BY	APP.	CHG. NO.

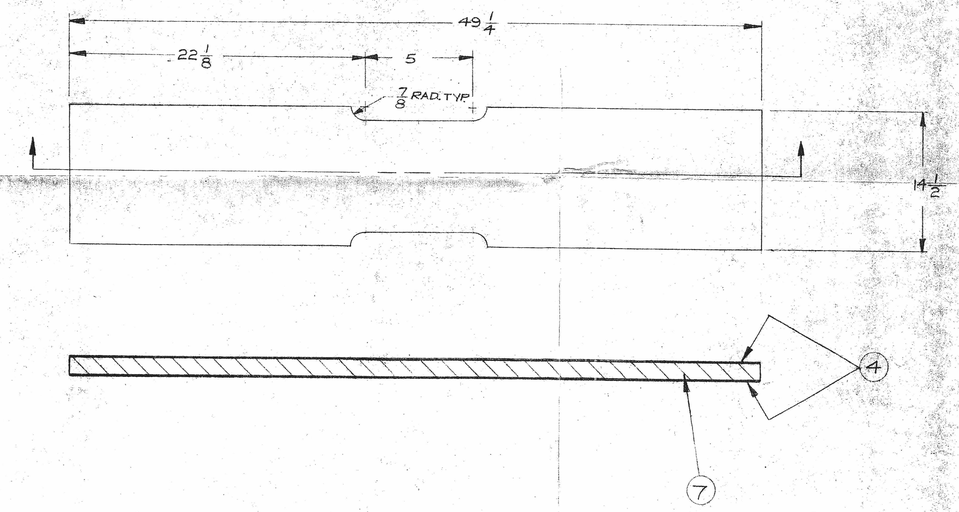

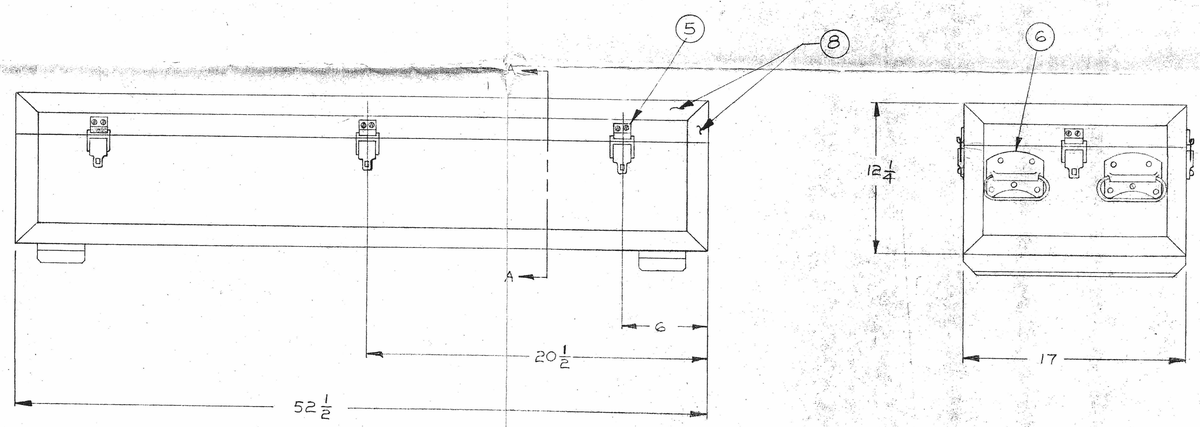

SECTION A-A

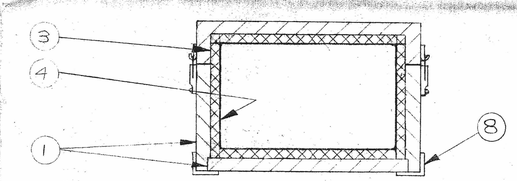

DOCKET NO. 70-139
File Cy.
Trans. w/ltr. 9-16-60

DOCKETED SEP 16 1960 Division of Licensing & Regulation Docket Officer

G-2	G-1	ITEM NO.	DRAWING NO.	DESCRIPTION	PROJECT NO.	USED ON ASS'Y
		14				
		13				
		12				
		11				
		10				
		9				
AR		8		ANGLE IRON 1/8 X 1 1/2 LG.		
AR		7		POLYETHYLENE HIGH DENSITY 1" THICK		
4		6		HANDLE CHEST # H20T5 SIZE 4 McMASTER-CARR SUPPLY CO.		
8		5		BOX LOCK # 15642 SC CORBIN		
AR		4		CADIMUM .020 THICK SHEET		
AR		3		POLYETHYLENE HIGH DENSITY 1/2" THICK		
AR		1		PLYWOOD 1" THICK		

TOLERANCES UNLESS OTHERWISE SPECIFIED	APPROVED		DATE	FINISH & SPECIFICATION
DECIMAL ± .005	DRAWN	J. J. Shaller	8/22/60	MATERIAL & SPECIFICATION
FRACTIONAL ± 1/64"	CHECKED			
ANGULAR ± 1/2°	APPROVED			
BREAK ALL SHARP EDGES	ENGELHARD INDUSTRIES, INC.			
REMOVE ALL BURRS	D. E. MAKEPEACE DIVISION ATTLEBORO, MASS.			

TITLE	SCALE	SIZE	DRAWING NO.	REV.
UNIVERSAL SHIPPING CONTAINER FOR FUEL ELEMENTS	~	D	50084	

D-11

Modern Blue Print Co.