City	1970 Population	Density Persons/mile^2
1. Watts Bar site--by way of U.S. 27 and I-40 to	---	---
2. Knoxville, TN--by way of I-75 to	174,587	2,267
3. Lexington, KY--by way of I-64 to	108,137	4,702
4. Morehead, KY	7,191	4,494

(b) Shipment activity - The estimated activity and quantities of the radioactive wastes to be shipped from Watts Bar are summarized as follows:

Type Waste	Annual Amount	Expected Activity # Shipment
1. Waste evaporator concentrates	1,050 ft^3	0.5 Ci/ft^3
2. Spent demineralizer resins	350 ft^3	<20 Ci/ft^3*
3. Miscellaneous dry solids	350 ft^3	<<0.5 Ci/ft^3
4. Radioactive equipment components	**	--
5. Tritiated water	50,000 gal***	2.5 μCi/cc

*Shipment in appropriate container with a dose rate 10 mrem/h at 6 feet.
**Low volume, no shipments during first years of operation.
***No shipments assumed for first 7 years operation, thereafter quantity shown shipped.

(2) Environmental effects - The environmental effects for these radioactive wastes for normal shipments and during accident occurrences are evaluated for the potential exposure to transport workers and the general public. It is assumed that packaged evaporator concentrates and spent resin radioactive wastes are shipped by truck at the regulatory radiation level limit of 10 mrem/h at 6 feet from the nearest surface. It is also assumed that the exposure

rate to transportation personnel is not greater than the regulatory radiation level limit of 2 mrem/h in occupied positions of vehicles.[4]

(a) Normal shipment - The estimated 25 shipments of solid waste containers between the reactor site and a disposal location will be done periodically. Regulations pertaining to such shipments, packaging, and shipping safeguards will be adhered to in all cases.

Under normal conditions, the truck driver might receive as much as 15 mrem per shipment. A total dose to all drivers for a given year, assuming two drivers per vehicle, would not exceed 0.75 man-rem.

Because of the low dose rates permitted at the time of shipment (10 mrem/h at 6 feet from the container), the only exposure to people from routine shipments is for the brief period such a shipment is in direct view. For example, a member of the general public who spends 3 minutes at an average distance of 6 feet from the container would receive a dose not exceeding 0.5 mrem. If 10 persons were so exposed per shipment, the total annual dose for the 25 shipments of waste evaporator concentrates and spent demineralizer resins would be about 0.125 man-rem.

Figure A-1 of Appendix A shows the location of the shipping container relative to people living adjacent to the transport route that was used to calculate radiation exposures. The radiation dose as a function of distance from a stationary shipping container is shown in figure A-2 of the same appendix. On the basis that there would be a total of about 30,000 people living along

the assumed 300-mile transport route between Watts Bar and the waste burial facility at Morehead, Kentucky, these 30,000 people would receive an annual dose of about 0.012 man-rem per year. A summary of these effects is given in Table 2.1-2.

The 5 to 10 shipments annually of compressible wastes would not contribute significant radiation exposure to the public. The low energy radiation from tritium will be shielded by the shipping vessel (tank truck) and will not be a source of radiation exposure during transport.

Since the exposure to the 30,000 people who reside along the route, to each truck driver per shipment, and to a person who might come within 6 feet of the container for a short period is only 0.0003, 11, and 0.4 percent, respectively, of the exposure these same people receive from natural background radiation; and since compressible waste and tritiated water shipments contribute no radiation exposure, it is concluded that no adverse environmental effects will result from the transportation of radioactive waste from Watts Bar to the disposal facilities.

(b) Accident occurrences - Based on the national truck accident statistics for 1969 and considering the number of waste shipments, a transportation accident may be expected to occur about once every 20 years. It is highly unlikely, however, that a shipment of solid radioactive waste would be involved in a severe accident during the 40-year life of the plant. This is based

on data on accidents involving TVA trucks during the past 10 years which show a rate of 4.06 accidents per million miles travelled. Based on these data and using the estimated annual shipment miles of radioactive material for the Watts Bar plant, truck accidents may be expected to occur about once every 12 years. However, about 90 percent of the accidents included in the TVA data are of a minor nature, and since radioactive shipments will be made in accordance with the stringent conditions imposed by AEC and DOT procedures and regulations, the probability of an accident of a severity which would result in release of significant quantities of radioactive materials to the environment would not be likely during the 40-year life of the plant.

If a shipment of compressible wastes in appropriate containers becomes involved in a severe accident, some release of waste might occur, but the specific activity of the waste will be so low that the exposure of personnel or the public would not be expected to be significant. Waste evaporator bottoms and spent demineralizer resins which have been solidified will be shipped in Type B or Type A packages as appropriate.[5] The allowable contents of Type A packages and the probability of release from a Type B package in a severe accident is sufficiently small that, considering the form of the waste and the very low probability of the severe accident occurrences, the likelihood of significant exposure would be extremely small.

Consideration has been given to the radiological impact of the shipment of tritiated water. The low energy radiation from tritium will be shielded by the shipping container and will not be a source of radiation exposure during normal transportation. Calculations have been performed for an accidental release of the entire contents of a 3,700-gallon container of tritiated water with a tritium concentration of 2.5 uCi/cc. A conservative upper limit for the resulting radiation dose is computed by assuming that all of the tritium evaporates into the atmosphere and is blown directly to an individual who remains at the maximum dose point for the entire period of release to the atmosphere. With these assumptions the maximum whole-body dose is computed to be 260 mrem, which is less than the annual dose limit to an individual in the general public as specified in 10 CFR Part 20. This dose decreases rapidly with distance, as shown in figure A-5, and at 600 feet is 10 mrem. If a uniform average population density is assumed, the population dose within 50 miles is less than 0.050 man-rem.

4. Shipping safeguards - The protection of the public from radiation during shipment of nuclear fuel and radioactive waste is achieved by a combination of limitations on the contents of the package according to the quantities and types of radioactivity, the package design, and the external radiation levels. In addition to these shipping safeguards, the transportation emergency plans will provide for rapid and orderly use of personnel and equipment in the event an accident occurs in the shipment of radioactive materials by TVA.

The Department of Transportation (DOT) has regulatory responsibility for safety in the transport of radioactive materials by all modes of transport in interstate or foreign commerce (rail, road, air, and water), except postal shipments.[6] Those shipments not in interstate or foreign commerce are subject to control by a state agency in most cases. The Atomic Energy Commission (AEC) also has responsibility for safety in the possession and use, including transport, of radioactive materials.[7] Both Title 10 and Title 49 of the Code of Federal Regulations set forth the limitations and classifications of the contents, design, and external radiation levels of transport packages.

(1) Governing regulations - This section identifies and summarizes the governing regulations affecting the transport of nuclear fuel and radioactive material. The major aspects of package design and the technical bases of the regulations and the control of the radiation emitted from individual packages are also discussed. In addition, the external radiation levels permitted for low specific activity (LSA) materials are listed.

Package classification depends on the type, form, and quantity of radioactive material being shipped in the individual container. Small quantities and certain materials of low specific activity are exempted from specification packaging, marking, and labeling when transported on a sole-use vehicle. All other types and quantities of radioactive materials are divided into two broad classes as either "special form" or "normal form." "Special form" radioactive materials means those which, if released from a package, might present some direct radiation exposure but would present little

hazard due to radiotoxicity and little possibility of contamination. This may be the result of inherent properties of the material (such as metals or alloys) or acquired characteristics, as through encapsulation. "Normal form" materials which do not meet these criteria are classified into one of seven transport groups and listed in a table of individual radionuclides.[8]

Varying quantities of special form and normal form radioactive materials are specified for Type A packaging, larger quantities for Type B packaging, and in excess of Type B quantities for "large quantity" radioactive materials. The Type A packaging standards are for normal conditions of transport. Type B packaging standards are for accident conditions. The large quantity standards are for accident conditions. The large quantity standards, in addition to considering both normal and hypothetical accident test conditions, must take into account other factors such as radioactive decay heating of the contents. Fissile radioactive materials also require consideration of the potential for accidental criticality.

Low specific activity packages must not have any significant removable surface contamination, and the external radiation levels must not exceed the following dose rates:

(a) 1,000 millirem/h at 3 feet from the external surface of the package (closed transport vehicle only);

(b) 200 millirem/h at any point on the external surface of the car or vehicle (closed transport vehicle only);

(c) 10 millirem/h at 6 feet from the surface of the car or vehicle; and

(d) 2 millirem/h in any normally occupied position in the car or vehicle.

The shipment of radioactive material from Watts Bar will be in full accordance with these and other regulations governing such shipments.

(2) <u>Package design</u> - The following discussion is directed toward relating the new fuel, spent fuel, and radwaste container design to AEC and DOT regulations for both normal and accident conditions. These conditions against which a package designer must evaluate any radioactive material packaging are intended to assure that the package has the requisite integrity to meet all conditions which may be encountered during the course of transportation.

(a) <u>New fuel container description and licensing</u> - Westinghouse is the new fuel fabricator for the initial core fuel assemblies. An AEC special nuclear material license[9] authorizes Westinghouse to deliver special nuclear material to a carrier for transport in the RCC and RCC-1 container packages. Authorization to transport new fuel assemblies has also been obtained by Westinghouse from the Department of Transportation under Special Permit No. 5430.

The new fuel assemblies are enclosed in polyethylene wrappers and placed in a metal container which supports the fuel assembly along its entire length during the course of transportation. This metal container also provides necessary impact protection to meet the drop test requirements of the AEC regulations.[10] The metal container is gasketed and bolted shut and includes provisions for pressurization and for humidity control. The characteristics of

the fuel shipping containers (Model Nos. RCC and RCC-1) are given below.

- All metal outer shell (14-gage steel) in form of a reinforced cylinder divided into two parts parallel to its long axis
- Steel beam forms "strong back" to support fuel assemblies
- Capacity - two PWR assemblies
- Weights

  Empty -- 3,000 lb

  Loaded - 6,150 lb
- Type B packaging requirements met (Department of Transportation (DOT) regulations - 49 CFR Section 173.398)
- Package design meets requirements for Fissile Class II and III shipments

(b) <u>Spent fuel container description and licensing</u> - There are several features which are typical of all spent fuel shipping casks which serve to prevent release of radioactive material. These include such things as heavy stainless steel shells on the inside and outside separated by dense shielding material, such as lead or depleted uranium.

The normal shipping conditions require that the package be able to withstand conditions ranging from -40°F to 130°F and to withstand the normal vibrations, shocks, and wetting that would be incident to normal transport. In addition, the packages are required to withstand specified accident conditions with the release of no radioactivity other than slightly contaminated

coolant and no more than 1,000 curies of radioactive noble gases. The accident conditions for which the package must be designed include, in sequence, a 30-foot free fall onto a completely unyielding surface, followed by a 40-inch drop onto a 6-inch diameter pin, followed by 30 minutes in a 1,475°F fire, followed by 8 hours' immersion under 3 feet of water. Appendix B[11] of this document relates these 10 CFR Part 71 accident conditions to similar conditions for the container which might be experienced as a result of a transportation accident.

It should be noted that there is a wide margin of safety in container designs.[12] For example, the IF-300 spent fuel shipping cask which will be used at Browns Ferry and may be used at Watts Bar is designed to absorb the total effects of the impact of a 30-foot free fall onto an essentially unyielding surface with deformation of the outer rims only. Because the outer shell has considerable strength as opposed to the impact energy-absorbing fins, there is a wide margin between the damage that would be experienced by the cask in absorbing the energy of the 30-foot free fall and that which would be required to breach the container such that there could be a release of the radioactive contents. It is estimated that the amount of energy involved to sustain a significant breach would be from five to ten times that which the cask experiences in a 30-foot free fall.

Thus, it is unlikely that the casks will experience conditions as severe as those imposed by the 10 CFR Part 71 requirements, and in any event, conditions far more severe than those would be required to result in a substantial breach of a container. As shown in the analysis in Appendix B, the specified

accident conditions are representative of conditions at least as severe as those which would be experienced by containers in transport. Further, since the specified accident conditions are required to be applied to the containers in sequence, the severity of these conditions in all probability far exceeds that to which the containers would ever be subjected as a result of an accident in the course of transportation. It is highly improbable that a container would be subjected to conditions as severe as even one of these conditions, let alone all three in the sequence provided for in the test.

The permissible radiation levels and releases under normal and accident shipping conditions are shown below.

NORMAL AND ACCIDENT SHIPPING REQUIREMENTS

	Normal Conditions	Accident Conditions
External Radiation Levels		
Surface of vehicle	200 mrem/h	N/A
3 feet from surface of container	N/A	1,000 mrem/h
6 feet from external surface of vehicle	10 mrem/h	N/A
Permitted Releases		
Noble gases	none	0.1% of total package radioactivity 1,000 Ci
Contaminated coolant	none	0.01 Ci alpha, 0.5 Ci mixed fission products 10 Ci iodine
Other	none	none
Contamination Levels		
Beta and gamma	2,200 dpm/100 cm^2	N/A
Alpha	220 dpm/100 cm^2	N/A

These levels represent limits which have been established by the regulations and are not to be exceeded. In most cases the containers should exhibit radiation levels and releases somewhat less than those permitted by the regulations. This is because the fuels and materials which will be handled are not expected to be at the maximum activity levels for which the containers have been designed.

TVA has not selected a contractor for the equipment and services related to spent fuel shipments. Therefore, the exact details of cask design and safety analysis in support of a specific licensing effort are not available at this time. However, TVA will ensure that the AEC, DOT, and any other applicable criteria for the spent fuel cask become a condition of the contract for these services.

(c) Radwaste container description and licensing - The design of the solid waste packaging station permits the use of several different types of containers or packages. The exact type of container to be used for shipments of higher level radioactive wastes from the Watts Bar Nuclear Plant has not been determined at this time. However, for purposes of evaluating the environmental risks associated with shipment of radioactive wastes from this plant, TVA has used the design and safety analyses made under contract with ATCOR, Inc., for the Browns Ferry Nuclear Plant shipping cask.

The container designed under this contract (LL-60-150) has been licensed (41-08165-06) for shipping the higher level wastes from Browns Ferry. The LL-60-150 container uses 4 inches of lead sandwiched between an inner shell of 1/4-inch

steel and an outer shell of 1-inch steel. It can be used for shipping the higher level encapsulated spent demineralized resins in 30-gallon drums from Watts Bar since the maximum allowable curie content of the [illegible]-gallon drum containing cement and spent resin is 240 curies of Class IIC radionuclides (32 rem/h at one meter from the unshielded drum). Shielding this container with an approximate amount of lead as for the LL-60-150 container reduces the dose rate at the surface of the shield to about 2.5 mrem/h which is only 1/4 the permitted dose rate at the time of shipment.

The LL-60-150 cask for the higher level solid waste is designed to meet or exceed the requirements established by AEC and the Department of Transportation for the shipment of large quantities of radioactive material. The evaluation made by ATCOR, Inc., in support of licensing for this cask considers both normal and accident conditions of transport.[13] An analysis was performed to demonstrate that the cask provides adequate shielding to satisfy dose rate levels in the vicinity of the cask as required by 49 CFR Section 173.393(j)(3). A shielding analysis was also performed to assure that the cask meets the dose rate requirements after a shielding loss has occurred due to a hypothetical accident occurrence.

Accident analysis showed that the lead may slump towards the bottom of the cask as a result of the hypothetical 30-foot drop accident. The level of the lead falls 1.6 inches, which will not remove the lead shielding from the top of the solid waste source. At 3 feet from the surface of the cask, the dose

rate is estimated to be less than 500 mrem/h (assuming 4.02 mrem/h at 6 feet before the accident), which is less than half the limit of 1,000 mrem/h at 3 feet stated in 10 CFR Section 71.36(a)(1).

The analysis for puncture resistance was performed, and it was found that when considering any point along the 1-1/2-inch thick outer shell, failure in this mode will not occur and no release of radioactive material to the exterior or dose rates in excess of 10 CFR Section 71.36 limits will occur. An analysis has been performed of the hypothetical fire accident. The thermal conductivity across the outer and inner steel shells plus the air gap is sufficiently low to keep the temperature of the lead about 150°F below its melting point. It was also shown that the cask is capable of holding the vapor pressure resulting from the elevated temperatures.

Immersion of the cask in 3 feet of water for more than 24 hours will not cause any detrimental effect since the cask is established in the analysis to be leaktight following the preceding accident conditions.

For the lower level waste (0.5 Ci/ft^3), an all-steel cask holding about 183 ft^3 has also been designed and will be constructed by ATCOR, Inc., for use at Browns Ferry and may be used at Watts Bar.

The low activity compressible waste will be packaged for shipment in appropriate containers. Radioactive equipment components will be shipped by contract with a specialist in the field who will provide the necessary containers, such as modified spent fuel casks.

(3) Transportation procedures - Elements of the procedures to be followed by TVA for handling radioactive materials for transportation and while in shipment are given below. These procedures will cover the normal conditions of transport as well as accident occurrences which might be encountered.

(a) Onsite procedures - The administrative control of radioactive materials intended for offsite shipment will include the following elements:

a. Certify container contents.

b. Assure performance of all tests on loaded containers as required by 10 CFR Section 71.35, 49 CFR Section 173.393(j), and 49 CFR Section 173.397(a).

c. Ensure that container and vehicle meet the requirements of applicable regulatory bodies for movement offsite.

d. Qualified manpower and appropriate equipment to be available to make routine determinations as required by (b) above.

e. Estimated time of arrival (ETA) at destination.

f. Provide approximate routing, mode of transport, estimated entry and exit times to various states as appropriate.

(b) Offsite procedures - The driver of the vehicle will be responsible for control of shipments en route and for following the transportation procedures delivered to him before leaving the site.

The state requirements for notification and responsible party to notify when radioactive materials are scheduled to be shipped through various states are given in Table 7.1-3.

(c) Normal conditions of transport - TVA now has nine nuclear units under construction or planned for operation between 1972 and 1979. Because of these commitments to the use of nuclear power for substantial portions of its generating capacity and the resultant necessity to ship radioactive materials associated with the operation of these and future nuclear plants, an interdisciplinary task force has been established to evaluate the environmental implications, available technology, economics, and other factors related to the consequent shipment of radioactive material to and from these plants.

The task force is investigating the various transportation modes, prevention of accidents, environmental risks and effects and is developing criteria for establishing TVA's policies and procedures relative to the applicable regulations. The findings and recommendations of the task force will be used in formulating the detailed plans for shipment of all radioactive material to and from all of TVA's nuclear plants now under construction or planned for the future.

(d) Accident occurrences during transport - Each state through which these materials pass will have developed emergency plans for radioactive transportation accidents. These plans, in conjunction with TVA transportation emergency procedures, will provide for rapid and orderly use of state facilities and personnel, augmented as necessary by TVA, carrier, and municipal emergency personnel and AEC radiological assistance teams in the event an accident occurs in the shipment of radioactive materials by TVA. In the event of an accident, emergency plans for containing the contaminated

material and preventing a radiation hazard to the public and the environment will be initiated.

Emergency procedures regarding transportation of radioactive material are described in TVA's nuclear plant procedure manual[14] and the TVA Radiological Emergency Plan.[15] Elements of the emergency procedures for handling transportation accidents for which TVA has responsibility will include, but are not limited to, the following:

1. Vehicular Accidents - General
   a. In the event of a vehicular accident involving radioactive material, establish a restricted area [10 CFR Section 20.203(b) and (c)].
   b. Use radiation survey meter to establish the perimeter of the restricted area.
   c. If survey meter is inoperable, calculate from experience and training a very conservative perimeter.
   d. If survey meter is operable and no radiation hazard exists, and the vehicle is in safe operating condition, the driver may continue on way if not detained by other accident-related conditions.
   e. In any case, immediately after establishing a restricted area or before proceeding on way, TVA shall be notified.
2. Notification and Reports of Incident
   a. Appropriate TVA personnel receiving notice of a transportation accident shall notify the TVA load dispatcher who notifies the Central Emergency Control Center director.

   b. The CECC director notifies as appropriate the AEC Operations Office, the State Department of Public Health, the state police, and the AEC Division of Compliance.
   c. The CECC director will provide assistance for cleanup and recovery operations as needed.

TVA has consulted and will consult further with appropriate state agencies regarding the necessary emergency planning for shipments of radioactive material through the state and to seek the state's agreement with TVA's Radiological Emergency Plan. Escorts will be provided where required by regulations and, in addition, where TVA considers them necessary.

5. Conclusion - Due to the integrity of the containers used for shipping new fuel elements, spent fuel elements, and low-level radioactive wastes; the emergency plans for vehicular accidents; the administrative control exercised over transportation; and coordination with appropriate state agencies; it is concluded that an insignificant environmental risk will result from the transportation of fuel elements from the fuel fabrication plant to the reactor, of spent fuel elements to the fuel reprocessing plant, and of low-level waste to offsite disposal grounds.

Table 2.1-2

RADIOACTIVE MATERIALS TRANSPORTATION - SUMMARY OF EFFECTS

(Normal Conditions)

Type	Transportation Mode	Transportation Frequency (Shipments/yr)	Stationary Cask Radiation Exposure (mrem/h) at 6 ft	Stationary Cask Radiation Exposure (mrem/h) at 100 ft	Cask Moving at 20 mi/h Individual Exposure (mrem/trip) Maximum	Cask Moving at 20 mi/h Individual Exposure (mrem/trip) Average	Population Exposure (man-rem/yr)
Spent Fuel	Rail (5 MTU/ shipment)	13	10	~0.1	0.0017	0.0006	0.006
Waste							
Low Level	Truck	25[a]	10	~0.1	0.003	0.001	0.012
						Total	0.018[b]

(10 CFR Part 71 Accident Conditions)

Type Shipment	Transportation Mode	Transportation (Shipments/yr)	Direct Radiation Dose Rate (mrem/h) at 3 ft	Direct Radiation Dose Rate (mrem/h) at 50 ft	Fission Gas Release External Dose (mrem) Whole body	Fission Gas Release External Dose (mrem) Skin	Fission Gas Release Whole Body Population Dose (man-rem)	Thyroid Dose (rem)
Spent Fuel	Rail (MTU/ shipment)	13	1,000	9	2	86	0.07	5
Waste								
Low Level	Truck	25[a]	500					

a. Design conditions.
b. This population group receives about 4200 man-rem/yr exposure from natural background radiation (140 mrem/yr).

Table 2.1-1

RADIOACTIVITY OF IRRADIATED FUEL[a]

(Ci/MTU)[b]

	Cooling Period (in days) 90	150	365
Fission Products	6.19×10^6	4.39×10^6	2.22×10^6
Actinides (Pu, Cm, Am, etc.)	1.42×10^5	1.36×10^5	1.24×10^5
Total	6.33×10^6	4.53×10^6	2.34×10^6

PREDOMINANT FISSION PRODUCTS IN GASEOUS FORM INCLUDED IN RADIOACTIVITY OF IRRADIATED FUEL

(Ci/MTU)

	Cooling Period (in days) 90	150	365
Krypton-85	1.13×10^4	1.12×10^4	1.08×10^4
Xenon-131m	1.06×10^2	3.27	1.08×10^{-5}
Iodine-131	3.61×10^2	2.17	1.96×10^{-8}

THERMAL ENERGY IN IRRADIATED FUEL

(Watts per metric ton of uranium)

	Cooling Period (in days) 90	150	365
Thermal Energy	2.71×10^4	2.01×10^4	1.04×10^4

a. Estimated burnup 33,000 MWD/MTU - Siting of Fuel Reprocessing Plants and Waste Management Facilities - ORNL - 4451, July 1970.
b. Approximately two assemblies per MTU.

Table 2.1-3

NOTIFICATION REQUIREMENTS OF STATES

FOR SHIPMENT OF RADIOACTIVE MATERIAL

Alabama

Requirements:

Telephone or telegraph
Route, mode of transportation, time of arrival in state

Notify:

Director
Division of Radiological Health
Room 311, State Office Building
Montgomery, AL 36104
Telephone: 205-269-7634

Georgia

Requirements:

Letter, telephone or telegraph
Approximate route and mode of transportation

Notify:

Chief
Radioactive Materials Control Section
Division of Radiological Health
535 Milam Avenue, SW
Atlanta, GA 30314
Telephone: 404-762-6111

Illinois

Requirements:

Letter, telephone or telegraph
Route, estimated arrival time in state

Notify:

Director
Department of Public Health
535 West Jefferson
Springfield, IL 62706
Telephone: 217-525-6550

Indiana

Requirements:

No notification required

Notify:

Director
Division of Radiological Health
1330 West Michigan
Indianapolis, IN 46206
Telephone: 317-633-6340

Kentucky

Requirements:

Letter, telephone or telegraph
Route, estimated entry and exit times in state

Additional:

Identify carrier and approximate activity of each shipment

Notify:

Director
Radiological Health Program
Kentucky State Department of Health
275 East Main Street
Frankfort, KY 40601
Telephone: 502-564-3700

Table 2.1-3 (continued)

Missouri

Requirements:

Letter, telephone or telegraph
Route, mode of transportation, entry and exit times in state

Notify:

Director,
Radiological Health Division
Broadway State Office Building
Jefferson, MO 65101
Telephone: 314-635-4111

Additional:

Truck shipments - license number and/or other identifying numbers, color of truck, entry and exit points in state, highway patrol will meet truck at border and provide protective following as a safety feature

Rail shipments - name of railroad, shipment car number and its location within the train, notification in transit if other cars are added or deleted from train, thus changing relative location of shipment within train, highway patrol will provide surveillance at locations where possible

North Carolina

Requirements:

Letter or telegraph
Route, mode of transportation

Notify:

Director
Division of Radiation Protection
North Carolina State Board of Health
P.O. Box 2091
220 North Dawson
Raleigh, NC 27607
Telephone: 919-829-4283

Comment:

Notification for each individual shipment may not be necessary if specific time interval when several shipments may be made can be scheduled. State is now in the process of formulating emergency planning with regard to shipments of this type, and requirements have not been formalized.

South Carolina

Requirements:

No notification required

Notify:

Director
Division of Radiological Health
South Carolina State Board of Health
2600 Bull Street
Columbia, SC 29201
Telephone: 803-758-5548

Tennessee

Requirements:

Letter or telephone
Approximate route and mode of transportation

Notify:

Director
Division of Radiological Health
727 Cordell Hull Building
Nashville, TN 37219
Telephone: 615-741-3161

2.2 Environmental Aspects of Transmission Lines - Transmission lines for the Watts Bar Nuclear Plant will be constructed in two steps which are coincident with the initial operation of units 1 and 2. The following table summarizes the lines which are required for the Watts Bar Nuclear Plant.

Line Name	Voltage (kV)	Approximate Length of New Construction (Miles)	Approximate Date Required
STEP I			
Bull Run-Sequoyah, Loop Into Watts Bar Nuclear Plant	500	10.0	December 1976
Watts Bar Hydro-Watts Bar Nuclear No. 1	161	1.0	December 1976
Watts Bar Hydro-Watts Bar Nuclear No. 2	161	1.0	December 1976
STEP II			
Watts Bar-Volunteer	500	80.0	September 1977
Watts Bar-Roane	500	33.0	September 1977
Watts Bar-Sequoyah No. 2	500	40.0	September 1977

Under Step I two 500-kV transmission lines will provide system connections for the Watts Bar Nuclear Plant Unit 1. These 500-kV lines will be provided by opening the existing Bull Run-Sequoyah 500-kV line in the vicinity of Watts Bar and extending the resulting line sections approximately 5 miles to the nuclear plant switchyard. This will establish 500-kV transmission line connections to the Sequoyah Nuclear Plant and to the Bull Run Steam Plant.

Station service power to the nuclear plant will be provided by two 161-kV transmission lines from the Watts Bar Hydro Plant. Only one mile of new construction for each line will be required. The remainder of the line will be two existing 161-kV transmission lines from the Watts Bar Hydro Plant to the Watts Bar Steam Plant. Both lines are entirely on the TVA reservation.

Under Step II three additional 500-kV transmission lines will be required when unit 2 is ready for initial operation--some nine months after unit 1 is in service. One of these will be a second line to the Sequoyah Nuclear Plant. Another will be a line to the proposed Volunteer Substation near Knoxville, Tennessee, and a third line to the proposed Roane Substation at Oak Ridge.

A major part of the Watts Bar-Roane 500-kV Transmission Line will be constructed on right of way of an existing transmission line from the Watts Bar Hydro Plant to the Atomic Energy Commission Substation K-27. This transmission line will be retired.

For the tentatively selected routes approximately 165 miles of new transmission line construction and approximately 3,165 acres of easements for new right of way will be required for the Watts Bar Nuclear Plant connections. Approximately 25 percent of the right of way is in woodland, 25 percent is used for farming and pasture, and the remainder is in uncultivated open land.

1. General considerations - As a first step in the transmission line location process, topographic maps are examined in the office to determine the best apparent route. Then a field reconnaissance is made using these maps. In the field, engineers first

look for the best places to cross major highways and secondary roads, at the same time avoiding, to the extent possible, residential, commercial, and industrial areas, recreational and other development, and areas of historical, scenic, or archaeological significance. Locations on crests of mountains and ridges are avoided to minimize visual impacts.

Route selection is coordinated with municipal, county, and state planning boards and with municipal, state, and Federal authorities when crossing of public lands is involved. At the same time care is taken to minimize the visual and physical impact of transmission facilities on residential properties. Locations along property lines and away from homes and barns are chosen where feasible.

In general, final route selection will be made in keeping with the Environmental Criteria for Electric Transmission Systems.*

Topographic maps frequently are out of date with respect to manmade features on the land. When this is the case aerial photographs are made along the route tentatively selected so that a final route can be determined with full knowledge of land use developments.

In selecting routes for transmission lines, TVA attempts to locate the lines so that no family relocations are required. This policy is being followed in the selection of routes for the lines from the Watts Bar Nuclear Plant, and no family relocations are anticipated. However, in the event families are relocated, assistance will

*U.S. Department of Interior and U.S. Department of Agriculture, Environmental Criteria for Electric Transmission Systems, Washington, DC, U.S. Government Printing Office, 1970, 0-404-932.

be provided in accordance with Public Law 92-646, "Uniform Relocation Assistance and Real Property Acquisition."

To the extent possible TVA avoids routing of its lines through residential areas. However, such areas frequently develop adjacent to the cleared areas created by the construction of transmission lines. When residential areas cannot be avoided, environmental impacts are minimized by following property lines as much as practicable, preserving natural vegetation and avoiding the splitting of land use zones.

Open land that is not being cultivated is generally preferred to timbered land for line locations, and routes are chosen to minimize conflicts with existing land uses. However, routes which result in substantial increases in length are generally avoided.

It is frequently necessary in the construction of transmission lines to cross rivers or other bodies of water. In selecting a location for such crossings, conflicts with residential, commercial and industrial developments; game sanctuaries; and scenic and recreational areas are avoided. Designs are developed to utilize the natural growth of trees and other vegetation for screening of structures.

In crossing streams under the jurisdiction of state agencies, onsite inspections are made with agency representatives to assure agreement on the location. All river crossings are coordinated with the appropriate local, regional, and state planning agencies. When it is necessary to cross wild or scenic rivers, TVA works closely with private organizations having an interest in preserving

such rivers, as well as with Federal, state, and local agencies having jurisdictional responsibilities.

When a navigable stream or reservoir is crossed, the crossing is coordinated with the United States Corps of Engineers. Crossings of streams and drainage areas having water conservation projects planned by the Department of Agriculture's Soil Conservation Service are coordinated with that agency.

The new transmission line routes will also be closely coordinated with the Tennessee State Planning Commission, the Tennessee Department of Conservation, the Tennessee State Highway Department, the Tennessee Historical Commission, the Southeast Tennessee Development District and Council of Government, the East Tennessee Development District, the Knoxville-Knox County Metropolitan Planning Commission, the Tellico Area Planning Council, and all appropriate county planning commissions.

The transmission line structures for these lines will be predominantly self-supported steel towers. The use of self-supported structures eliminates the need for guys. The small amount of land occupied by supporting structures is the only part of the right of way which cannot be used for other purposes. The remainder of the right of way remains clear of obstructions and is available for a variety of other uses.

2. <u>Beneficial uses of transmission line right of way</u> -

(1) <u>Shear clearing of right of way</u> - In the construction of new lines through wooded areas, the right of way

will be "shear cleared" (cleared of trees and other vegetation to the ground level) and seeded except where outcropping of rock or steep slopes makes it impracticable. New right of way is seeded with pasture-type grasses or wildlife food and cover if preferred by the property owner.

The interface or "edge" between two diverse plant communities will often produce or attract more kinds and number of animals than would occur in either habitat type alone. This phenomenon is referred to as the "edge effect" and occurs on utility lines where the low herbaceous and woody plant growth meets the forest, or where adjacent cropland and weedy or "brush" right of way merge.

Power line right of way has great potential as wildlife habitat because of the "edge effect" which it creates and the high food and cover productivity of early vegetation successional stages. Many power lines are good producers of wildlife without special management because of these two factors.

Mechanical maintenance of some type is generally required about every five years for utility line right of way. Early stages of plant succession, particularly the first 6 to 8 years, are the most productive for many wildlife food and cover plants. In addition, the low herbaceous plant growth produces insects which provide the high protein content necessary in the diet of many young bird species (game and nongame).

Shear clearing through heavily forested areas is not inconsistent with good forestry and wildlife principles. A common wildlife management practice in large sections of unbroken

forest land is to "open" the tract by means of small evenly spaced clearings. Rationale for this practice is to provide diversity and food in the forest environment and to create "edge." Wildfires originally provided this type of habitat. Power line right of way creates long linear forest openings which are indefinitely maintained to prevent power outages. The sunlight penetrating the forest via the right of way stimulates understory growth adjacent to the power line. Periodic power line maintenance perpetuates these beneficial wildlife habitat conditions.

Line maintenance operations will involve periodic repairs and selective cutting of vegetation along the right of way to maintain electrical clearance between the conductors and the ground cover. Growth of vegetation is controlled by mechanical cutting, replacement planting, or the use of herbicides. The herbicides used are Tandex, Tordon 101, Tordon 10K pellets, 2,4,5-T and/or Hychlor and are presently approved for this specific use by the Federal Working Group on Pest Management. The cuttings usually are piled in windrows along the edge of the right of way where they provide game habitat. Brush killed by herbicides is allowed to stand. It deteriorates in a year or two and falls to the ground or is obscured by new growth. These operations involve only minor environmental impacts.

TVA employees responsible for right of way maintenance work closely with wildlife biologists and foresters of TVA's

Division of Forestry, Fisheries, and Wildlife Development. The combined expertise of these TVA employees and other TVA specialists insures that biologically sound and economically feasible recommendations are made to improve wildlife habitat on the rights of way of property owners.

TVA, in cooperation with the Tennessee Game and Fish Commission, has published a booklet for distribution to landowners describing inexpensive practices they may employ to benefit wildlife on their land.

(2) Multiple use of right of way - As a general rule where transmission line right of way crosses wooded areas, TVA is willing to perform the necessary clearing or invest as its part of a cooperative arrangement an amount which approximates the average cost to clear or later reclear the area as dictated by maintenance requirements. TVA negotiates with county agents, state and Federal park commissions, soil conservation agencies, sportsmen groups, and other interested agencies that propose compatible uses for wooded land within easement areas that will meet the goals of the interested parties. Under such an arrangement, forest development interests can be implemented which allow growing of small trees such as Christmas trees and nursery stock. Also, buckwheat, Korean and Kobe lespedeza, and other low-growing seed crops and grasses which are beneficial to small game habitat can be planted for the establishment of shooting preserves. Right of way not totally cleared can be utilized for production of many low-growing forest products.

It is recognized that many additional multiple right of way uses can be identified. If the landowner desires to use the right of way for the establishment of playgrounds, athletic

fields, golf courses, parks, picnic areas, or trails for hiking and horseback riding, such use would be permissible under the terms of TVA's easement.

TVA recognizes there is an annual loss of forest products due to the construction and operation of transmission lines. Investigations have been undertaken to utilize transmission line corridors for "Pucherbrush Forestry." For several years now TVA has been conferring with Dr. Harold E. Young at the University of Maine on the use of "Pucherbrush Forestry." This pilot forestry program in the Northeast is an outgrowth of the Sycamore Silage Study considered at the University of Georgia. At present adequate markets have not been developed to fully utilize the harvest from either of them. TVA will continue its interest in this area, and the landowners will not be discouraged from utilizing the right of way in this manner.

3. Solid waste disposal - TVA contracts most right of way clearing for the construction of transmission lines. Open burning is normally employed for disposal of forest slash cleared from rights of way in compliance with local, state, and Federal air pollution guidelines. This results in releasing some particulates and gases into the atmosphere. However, these minor effects are local and generally short-lived.

A burning method which results in further minimizing the release of smoke into the atmosphere is utilized in areas where open burning is undesirable or not permitted. In this method forest slash is burned by using an air curtain incinerator. The slash is placed in a large pit (approximately 10 feet deep, 15 feet long, and

10 feet wide) and set on fire. Air, fed to the fire by blowers, is supplied at the proper rate for minimum smoke emission. At least one guard and as many men as required to supervise the burning process are kept on duty night and day until all fires have been extinguished.

In cases where disposal by burning is not possible, slash is piled in windrows along the edge of the right of way or in scattered brush piles along slopes and ravines. An alternate method of disposal is being explored involving mechanical chipping and scattering or piling of chips on the soil for wildlife habitat.

In general, other solid waste generated by transmission line construction is very small. These minor construction waste items consist of protective wood cribbing attached to conductor reels, line insulator cardboard shipping cartons and steel bands used to bind tower structural items, and other line hardware.

At staging or material assembly points, relatively large quantities of the used packing material which accumulates is transported to approved waste disposal or land fill sites. However, in localized areas, smaller quantities of wood and paper are disposed of by controlled burning. Noncombustible waste and residue from burning is buried onsite at a depth of approximately 3 feet and the disturbed area is graded and seeded to prevent soil erosion.

4. Erosion control practices - Construction of the transmission lines will involve the use of heavy equipment for tower erection and stringing of conductor. Although this equipment may cause temporary rutting along the right of way, precautionary measures are taken so that the effects of soil erosion on regional

water quality is not significant. The erosion of local areas that results is controlled to a significant degree by: (1) using special construction procedures which limit the use of heavy equipment in areas of high erosion potential, diverting runoff to settling ponds where the land is exposed, and keeping vegetation on the land as long as possible before construction, and (2) scheduling construction activities in certain areas to coincide with favorable dry weather conditions.

When line construction is completed, the right of way is contoured and usually seeded with pasture-type grasses or planted in wildlife food and cover to control soil erosion and provide wildlife habitat.

Where possible, access roads for transmission line construction will follow existing farm roads, and after construction TVA will restore these roads to their original or an improved condition. In the event that a new access road is required, the property owner will be consulted regarding the route which will be most beneficial to him after construction. Any grading required will be engineered to balance cut and fill, thereby eliminating the need for a separate borrow pit. The road routes will be selected to minimize damage to existing growth and drainage ditches. Terracing and ground cover will be provided in order to prevent soil erosion.

5. Miscellaneous impacts -

(1) Ozone - Ozone can be produced from corona discharges (ionization of the air) in the operation of transmission lines and substations, particularly at the higher voltages.

It can be harmful if breathed in sufficient concentrations over prolonged periods. However, it is not considered to be injurious to vegetation, animals, and humans unless concentrations exceed about 0.05 ppm.

Corona discharges can result from abrasions, foreign particles or sharp points on electric conductors and electric equipment, or incorrect design which produced excessively high potential gradients.

Extensive field tests to detect ozone in the vicinity of 765-kV lines were recently completed by the Battelle Memorial Institute under a variety of meteorological conditions. From these tests it was concluded that no significant adverse effects on vegetation, animals, or humans are to be expected from levels of ozone that may be produced in the operation of transmission facilities at voltages up to 765 kV. Consequently, any levels of ozone that can reasonably be expected to be generated by TVA's transmission facilities (500-kV maximum nominal voltage) would be environmentally inconsequential.

TVA gives careful attention to the design and construction of its transmission facilities to minimize corona discharges. TVA specifications require that transmission line hardware and electrical equipment for operation at 500,000 volts be factory tested to assure corona-free performance up to maximum operating voltage levels.

As of 1972 TVA has accumulated approximately 5,300 mile-years of operation of its 500-kV transmission system with no known adverse effects attributable to the production of ozone from corona discharges.

A more detailed report of ozone characteristics, sources, and a discussion of tests and reference material can be found in Appendix C.

(2) Compatibility with communications equipment - High-voltage power lines operating in close proximity to telephone and signalling equipment can produce undesirable effects on the communication circuit through inductive coupling. However, it is TVA's normal practice to send transmission line vicinity maps to railroad and telephone companies having tracks or communication lines in the general area of proposed power lines for the purpose of making inductive coordination studies. If corrective action is indicated, the problem will be jointly studied and any required changes will be provided at TVA's expense. This procedure will be followed for the new transmission line connections for Watts Bar Nuclear Plant.

No inductive coordination problems have been experienced on the Bull Run-Sequoyah-Widows Creek 500-kV Transmission Line which has been in operation for several years. It is expected that no new problems will be encountered when this line is altered in the vicinity of Watts Bar Nuclear Plant to form the Watts Bar-Sequoyah and Watts Bar-Bull Run 500-kV lines. For the selected routes, we do not anticipate any inductive coupling problems for the other proposed transmission lines.

(3) Historical and archaeological compatibility - This project will be coordinated with the Tennessee Historical Commission, or other appropriate agencies, to identify any potential archaeological sites traversed by the proposed transmission line routes. Any such conflicts which might occur will be avoided to the fullest extent practical. Should artifacts occur on the transmission line easement areas, the lines would cause virtually no interference with the potential recovery of such artifacts.

(4) Impacts on aviation - When transmission line structures exceed certain heights as prescribed by the Federal Aviation Administration, as is frequently the case with crossings of major rivers, structure heights are coordinated with the FAA to conform to air safety regulations. River crossing structures exceeding heights as specified by the FAA are painted and provided with lights to meet Federal Aviation Standards.

(5) General impacts - During normal operations no adverse environmental impact is associated with either 161- or 500-kV transmission lines. Under some atmospheric conditions a light humming may be noticed directly under 500-kV lines, but this noise is rarely heard off the right of way. Transmission lines can, under certain conditions, cause mild static charges to develop on fence wires and other ungrounded objects under the lines. These charges are similar to the common static charges people experience when walking on certain types of indoor carpeting in dry weather.

The landowner retains all mineral rights to his land, and he may use the land for whatever purposes he wishes

so long as such uses do not conflict with the terms of the easement. In many instances the existing land uses--particularly agricultural uses--may continue. However, such things as buildings, signboards, stored personal property, or other obstructions which create fire hazards and/or interfere with the operation and maintenance of the line may not be located on the right of way. Except in very unusual situations, the transmission lines will have no effect on aerial crop dusting.

Damage to fences, gates, bridges, and other structures will be paid for or repaired by TVA following construction, and landowners are reimbursed by TVA for the value of crops damaged by construction act ".

6. Tentative transmission line route selection - Based on the above considerations, the tentative line routes and alternate routes for connecting the Watts Bar Nuclear Plant were investigated. The routes shown on figure 2.2-2 are feasible at present. Changes within the next 3 years may require that these routes be shifted to avoid new developments.

(1) Watts Bar-Volunteer 500-kV Transmission Line - To supply the growing loads in the Knoxville, Tennessee, area, a new 500-kV transmission line will connect Watts Bar Nuclear Plant with the proposed Volunteer Substation, which will be in the vicinity of Strawberry Plains, Tennessee.

A generally straight routing would, of course, be the shortest and most direct method of connecting the nuclear plant with the Volunteer Substation, as indicated schematically

as proposed Route A on figure 2.2-1. This would require the least amount of right of way easement and fewer transmission line structures. However, this would not be feasible as this route traverses the heart of Knoxville and the rapidly developing areas in the vicinity of Loudon and Lenoir City. This routing would also create extensive conflict with other existing developments in the area.

A second alternate route shown schematically as proposed Route B on figure 2.2-1 was developed considerably south of the above route. This route would have left the Watts Bar switchyard and traveled in a generally eastward direction for approximately 5 miles. From this point the route would have turned northeast until it intersected with an existing 161-kV TVA transmission line. For approximately 13 miles the new route would have then paralleled the existing transmission line. From this point the route would have proceeded eastward and crossed the Little Tennessee River approximately 8 miles south of Lenoir City, Tennessee. From this point the projected route stayed well south of Maryville, Tennessee. The line would then proceed in a northeastward direction toward Strawberry Plains, Tennessee. As more detailed information was developed, it became obvious that conflicts with existing development plans were numerous. The Watts Bar switchyard arrangement could not be properly adjusted for the lines to leave in an eastward direction. In addition, large deadend towers would have been required adjacent to the switchyard to terminate the line tension from the river crossing spans over the Tennessee River. Residential developments adjacent to the existing 161-kV transmission line in the proposed parallel section would have necessitated the

purchase of several houses. This route would cross the proposed Timberlake development project in an area designated as a water-oriented residential subdivision.

Considering the above factors, it became obvious that another route farther south would be required to minimize the conflicts with present developments.

A third alternate as shown schematically as proposed Route C on figure 2.2-2 provided the most feasible route. This route will leave the substation switchyard generally in a southward direction. This will allow coordination with the switchyard arrangement and provide a perpendicular crossing of the Tennessee River. The route will then proceed to a point in the vicinity of Highway 58, crossing it at approximately 90 degrees in a wooded area. This provides a very satisfactory crossing and is in keeping with the Environmental Criteria for Electric Transmission Systems published by the Department of the Interior. The route will then traverse in an eastward direction north of Niota, Tennessee, placing it approximately midway between the cities of Athens and Sweetwater, Tennessee, thereby avoiding these more populated areas. Proposed Interstate Highway 75 will be constructed in this vicinity. The transmission crossing over the interstate will be closely coordinated with the Tennessee State Highway Department. After crossing U.S. Highway 11 north of Niota, the route will turn northward to avoid Christiansburg and the "Lost Sea" tourist attraction. From this point a location through the proposed Timberland development will be used which will minimize the conflict with this development. The planners for this project concur

with this location as it places the line adjacent to an industrial development. After crossing the Little Tennessee River, the route will turn eastward and cross the U.S. Highway 411 at approximately 90 degrees. It will then turn in a northeastward direction and will follow the lower slopes of Black Sulfur Knobs at the foothills of the Chilhowee Mountain. The location will avoid the more populated areas in the vicinity of Springview, Forest Hills, and Blockhouse. The line will cross U.S. Highway 73 and U.S. Highway 441 in areas of marginal development minimizing the environmental impact. The route will then head northwestward to the Volunteer Substation site.

This proposed route will be approximately 80 miles in length with approximately 72.5 miles being built on a 200-foot right of way easement. Five miles at the Watts Bar Nuclear Plant will parallel the Bull Run-Sequoyah 500-kV Transmission Line loop to Watts Bar, and 2.5 miles will parallel the Watts Bar-Sequoyah 500-kV Transmission Line No. 2 (see figure 2.2-2). Approximately 1,800 acres of new right of way easement will be required for proposed Route C as shown on figure 2.2-2. The route traverses primarily rural areas and partially wooded rolling hills.

(2) <u>Watts Bar-Bull Run and Watts Bar-Sequoyah No. 1 500-kV Transmission Lines</u> - The existing Bull Run-Sequoyah 500-kV Transmission Lines, which was constructed in 1967, will be looped into the new switchyard by constructing two single-circuit lines, each approximately 5 miles in length. This will create the Watts Bar-Bull Run 500-kV line and the Watts Bar-Sequoyah 500-kV Transmission

Line No. 1 which is shown schematically as Routes E and F respectively on figure 2.2-2.

In keeping with the switchyard arrangement at Watts Bar Nuclear Plant and also to provide a perpendicular crossing of the Tennessee River, these lines will be constructed parallel to the proposed Watts Bar Nuclear-Volunteer 500-kV Transmission Line on right of way approximately 650 feet wide. This 5-mile section of wide right of way will require approximately 400 acres of easements. The use of common right of way reduces the environmental impact along the route in that 18.75 percent less acreage is required in parallel construction than for four transmission lines on separate rights of way.

(3) Watts Bar-Roane 500-kV Transmission Line - To supply the increased AEC loads in the Oak Ridge, Tennessee, area, a new 500-kV transmission line will connect the Watts Bar Nuclear Plant with the proposed Roane, Tennessee, 500-kV Substation. A site for this substation has tentatively been located approximately 10.5 miles southwest of Oak Ridge, Tennessee.

In 1933 a 220-kV transmission line was constructed from Wheeler Reservoir in north central Alabama to Norris Hydro Plant approximately 20 miles northwest of Knoxville, Tennessee. In 1964 approximately 30 miles of this line was utilized at 161-kV to connect Watts Bar Hydro Plant with the Atomic Energy plant at Oak Ridge. The construction of a 500-kV line, due to its large current-carrying capabilities, will eliminate the need for this lower voltage transmission line connection. Approximately 27 miles of this

transmission line easement, which was purchased in 1933, will be utilized for the 500-kV line to Roane 500-kV Substation as shown schematically as proposed Route D on figure 2.2-2. Approximately 6 miles of new 200-foot-wide right of way easement at the Watts Bar Nuclear Plant end of this connection will be required.

The connection to Roane will leave the Watts Bar Steam Plant switchyard generally in a southward direction for approximately two spans and then turn southeastward and cross the Tennessee River. Approximately 0.75 miles east of the river, the route will head generally northward following as much as possible the Watts Bar Reservation boundary until the proposed route intersects with the existing right of way of the 161-kV line which is to be utilized for the 500-kV line.

As much as possible, the new 500-kV towers on the Watts Bar-Roane 500-kV Transmission Line will be installed at the location of the retired towers, thereby reducing the land use impact along the existing right of way. The 500-kV towers will be comparable in height and appearance with the existing towers and will therefore not create any additional visual impact. By utilizing existing right of way for this proposed route, new land easements are reduced from 800 to 145 acres.

(4) Watts Bar-Sequoyah No. 2 500-kV Transmission Line - To provide backup transmission facilities for transmission system stability, a second 500-kV transmission line connection will be required from Watts Bar Nuclear Plant to the Sequoyah Nuclear Plant. A straight line routing would be the shortest, most

direct method of connecting the two nuclear plants. This would require the least amount of right of way easement and fewer transmission line structures. However, this would not be practical, as the route would have crossed the Tennessee River eight times and the Hiwassee River once.

A second alternate route that was given consideration was to construct the second 500-kV line parallel to the proposed Watts Bar-Sequoyah 500-kV Transmission Line No. 1 which is shown as Route F on figure 2.2-2. Field investigations revealed that developments adjacent to the existing right of way in the vicinity of Tennessee State Highway 58 were quite extensive. Several houses would have to be purchased and several families relocated. Also, to reduce the possibility of a natural disaster causing an outage on both ties to Sequoyah, separation of the lines as much as possible is desirable.

Considering the above factors, it became obvious that a search for another alternate route would be desirable. Further field investigation revealed that the location shown schematically as Route G on figure 2.2-2 provided the best routing at the present time. In keeping with the switchyard arrangement at Watts Bar Nuclear Plant and also to provide the desirable perpendicular crossing of the Tennessee River, this route will be parallel to three of the 500-kV lines out of Watts Bar for about 5 miles and will then be parallel to the proposed Watts Bar-Volunteer 500-kV line for an additional 2.5 miles. The developments on the land adjacent to the Tennessee River, the communities of Forest Grove and Fairview, and the Highway 58 area dictated the use of common right of way. The use of right of way

easement common with the Volunteer 500-kV line reduces the amount of easement required and also provides greater separation between the two lines to Volunteer. From this point the route will proceed southeastward for about 2 miles, then turn south-southwestward for about 17 miles. This will locate the line route in the low-lying area adjacent to Rogers Creek and to the east of the more developed areas along the Hiwassee River. The route will then proceed westward, avoiding the more developed areas adjacent to Candies Creek and cross Tennessee State Highways 58 and 60. The crossings over Highways 58 and 60 both will be at about 90 degrees and in the low-lying area adjacent to Gunstocker Creek. The route will then turn southwestward and intersect with the existing Watts Bar-Sequoyah 500-kV Transmission Line No. 1. The remaining 2 miles and the crossing over the Tennessee River will be constructed on 350-foot-wide right of way common with Watts Bar-Sequoyah 500-kV Transmission Line No. 1. One hundred and fifty feet of this easement will be new.

Route location G as shown on figure 2.2-2 will be approximately 40 miles long, of which about 30.0 miles will be constructed on easement 200 feet wide. The remaining 10.0 miles will be on right of way common with other lines. Approximately 820 acres of new easement will be required for this line route.

(5) <u>161-kV transmission lines for station service</u> - Station service power for the Watts Bar Nuclear Plant will be supplied from the Watts Bar Hydro Plant over two separate 161-kV transmission lines. These lines will be on separate structures, and the separation of the lines will be sufficient to insure that the

failure of any tower will not endanger the other lines in order to comply with safety criteria set forth by the Atomic Energy Commission. These lines will be created by utilizing the two existing 0.6-mile 161-kV transmission lines from the Watts Bar Hydro Plant to the Watts Bar Steam Plant. From the Watts Bar Steam Plant approximately 1 mile of new construction will connect the two single-circuit 161-kV transmission lines to the Watts Bar Nuclear Plant. Both the existing and new construction for the 161-kV transmission line connections will be entirely on the TVA Watts Bar Reservation.

7. Conclusion - No long-term environmental goals appear to be jeopardized by the transmission lines, and no significant adverse cumulative impact on the environment is foreseen. The transmission lines involve the commitment of the resources used in the construction of the facilities and will cause some minor limitations in land use. No significant permanent alterations in topography are involved. The cumulative impact of the project will be to help maintain reliable electric service to consumers receiving TVA power.

The amount of land required in proportion to the added transmission capacity has been greatly reduced by TVA's use of extra high voltage lines to transmit the power generated at the Watts Bar Nuclear Plant. One 500-kV line can transmit more power than ten 161-kV lines while requiring only twice as much right of way as one 161-kV line. The replacement of a lower voltage line with a higher voltage line on existing right of way easement also reduced the impact on land use.

No irreversible and irretrievable commitments of resources are associated with the transmission line connections. No water or air damage is anticipated; very little if any objectionable noise will result; and only minor land use limitations are involved.

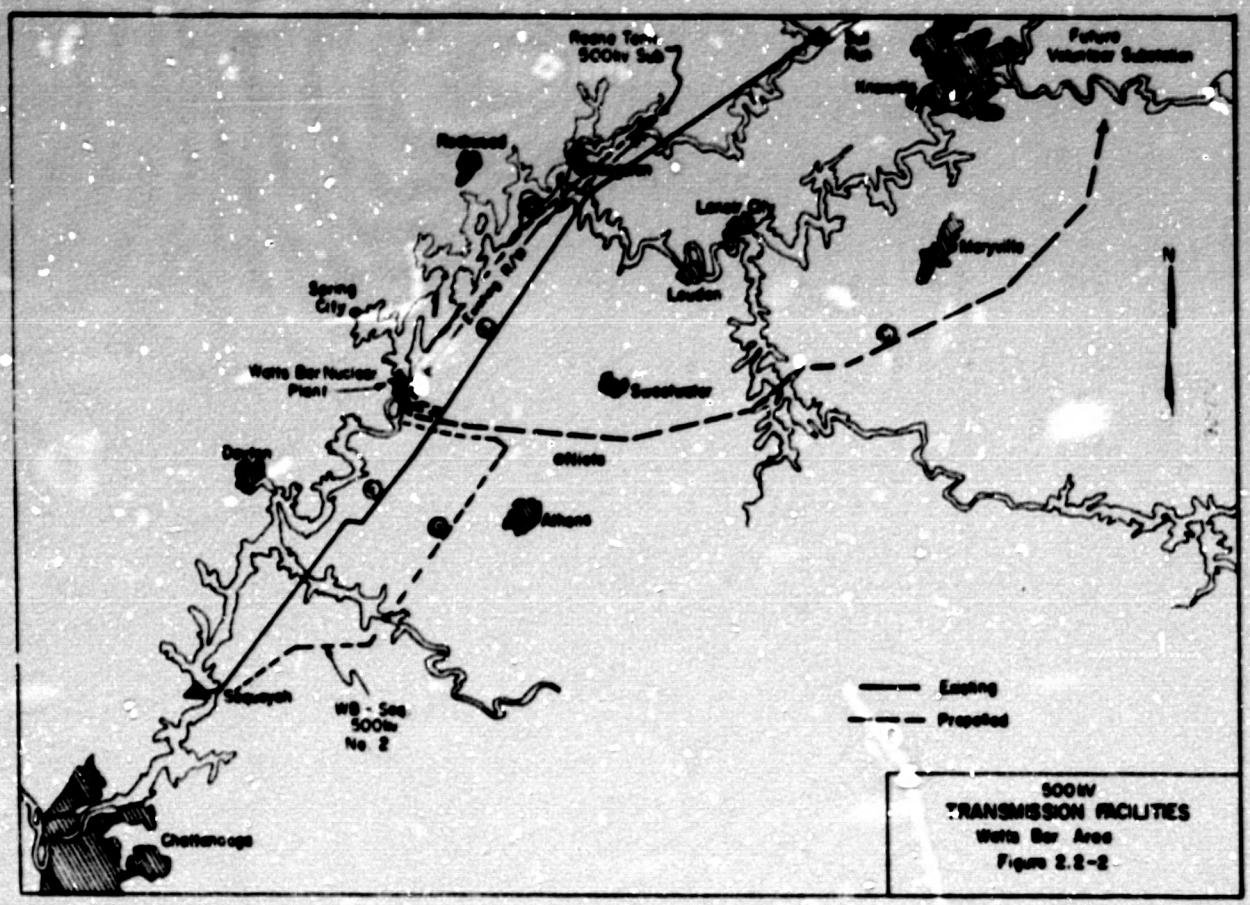

500 kV
TRANSMISSION FACILITIES
Watts Bar Area
Figure 2.2-2

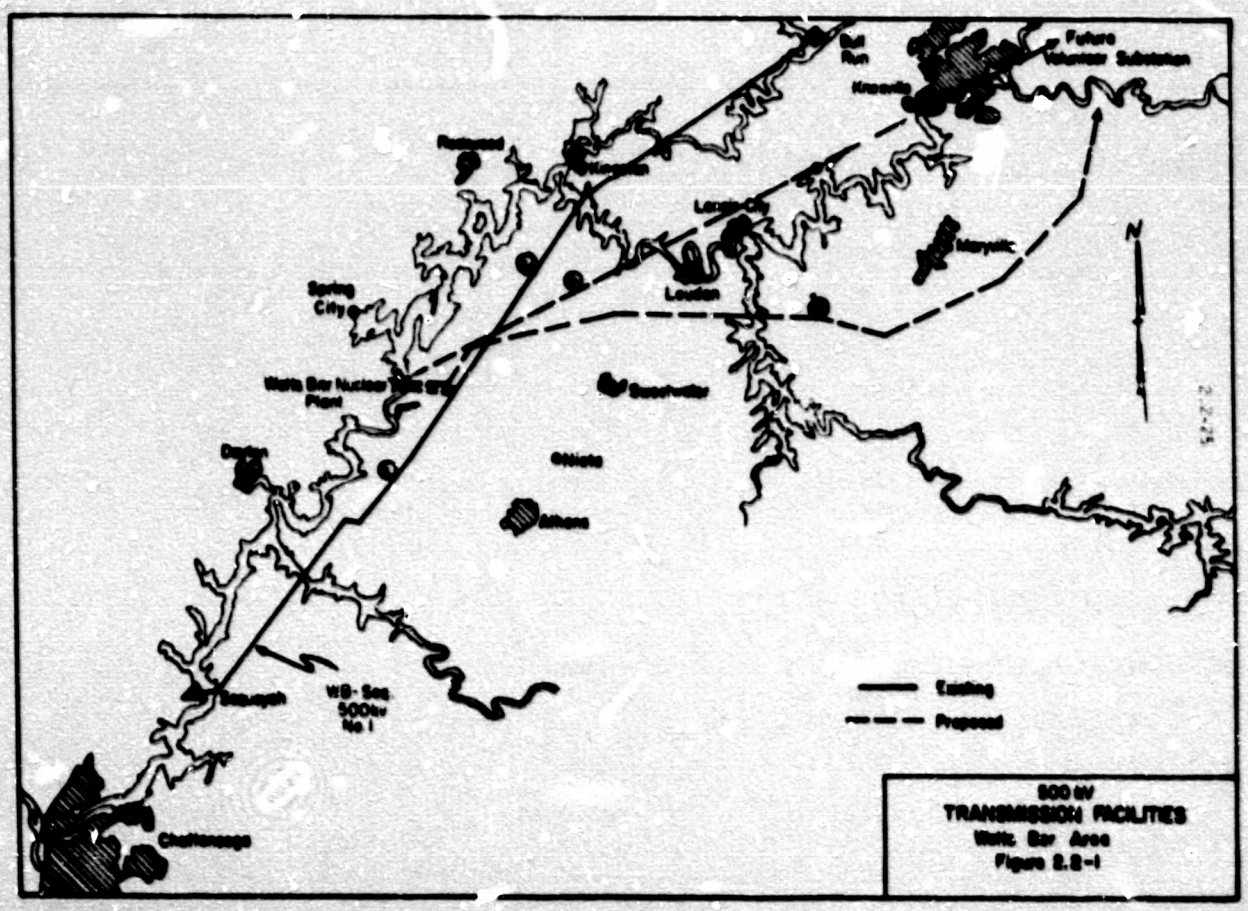

500 kV
TRANSMISSION FACILITIES
Watts Bar Area
Figure 2.2-1

F-6

2.3 Radiological Effects of Accidents - To aid in developing the overall balancing of environmental costs and benefits of the Watts Bar Nuclear Plant, an assessment has been made of the consequences that might result from the occurrence of postulated accidents. In order to appraise realistically the environmental risks of postulated radiological accidents, parameters, physical characteristics, and phenomena which reflect the present state of the art have been used in the analyses. Best estimates are used where experimental evidence is not sufficient to describe a situation. This approach to the analyses is therefore different from that used in safety analysis reports where conservative values are used to establish limits for design bases.

In accordance with AEC requirements, TVA has submitted with its application for permits to construct units 1 and 2 a safety analysis report which describes the technical features of the plant and the provisions for ensuring the health and safety of the public. The analyses presented in this safety analysis report demonstrate that even for postulated accidents of great severity analyzed using highly conservative assumptions, the radiological consequences would be within the reference values of 10 CFR Part 100.

Those postulated accidents having the potential for uncontrolled release of radioactive material to the environment have been divided by the Atomic Energy Commission into nine classes based on the systems involved and the type and potential consequences of the release. These classes are shown in Table 2.3-1. The accident analyses presented in Appendix D are based on the guidance given by AEC in the proposed annex to Appendix D, 10 CFR 50.[1] This approach will allow comparison between reactors of different types at different sites.

In order to [illegible] TVA, some measure of probability is required. In general, TVA believes that certain accidents may reasonably be expected to occur during the lifetime of the plant. These (accident subclasses 1.0, 2.0, and 5.1) are included in the estimates of routine radioactive discharges. The accidents in classes 3.0, 4.0, and 5.0 are not expected to occur during the 40-year lifetime of the plant. Accidents in classes 6 and 7 are relatively less probable but still are possible. The probability of occurrence of class 8 accidents is very small. The postulated occurrences in class 9 involve sequences of successive failures more severe than those required to be considered in the design basis of protection systems and engineered safety features. Their consequences could be severe. However, the probability of their occurrence is so low that their environmental risk is extremely small. Defense in depth (multiple physical barriers), quality assurance for design, manufacture and operation, continued surveillance and testing, and conservative design are all applied to provide and maintain the required high degree of assurance that potential accidents in this class are, and will remain, sufficiently low in probability that the environmental risk is extremely small.

Appendix D of this statement, "Outline of Accident Analyses," describes the accidents analyzed and the more important assumptions. In general, coolant activities are based on 0.5 percent failed fuel (as indicated by reference 1), atmospheric dispersion values are those given in AEC Safety Guide No. 4[2], and fuel element fission product inventories are calculated using the model given in TID-14844[3]. Doses to hypothetical individuals at the minimum exclusion distance (1,200 meters) and the dose commitment to the population

within 50 miles of the plant are presented in Table 2.3-2. A more detailed discussion is given in Appendix D. Reasonable assumptions other than those given in reference 1 can be used to calculate releases, but the conclusions as to the environmental risks due to postulated radiological accidents will be similar.

Table 2.3-2 indicates that the realistically estimated radiological consequences of the postulated accidents would result in exposures of an assumed individual at the site boundary to concentrations of radioactive materials within the yearly dose limits of 10 CFR Part 20. Table 2.3-2 also shows that the estimated integrated exposure of the population within 50 miles of the plant from each postulated accident would be orders of magnitude smaller than that from naturally occurring radioactivity, which corresponds to approximately 145,000 man-rem/yr based on a natural background level of 0.145 rem/yr. When multiplied by the probability of occurrence, the annual potential radiation exposure of the population from all the postulated accidents is an even smaller fraction of the exposure from natural background radiation and, in fact, is well within naturally occurring variations in the background. It is concluded from the results of the analysis that the environmental risks due to postulated radiological accidents are exceedingly small.

TABLE 2.3-1

CLASSIFICATION OF POSTULATED ACCIDENTS AND OCCURRENCES

No. of Class	Description	Example(s)
1	Trivial incidents	Small spills Small leaks inside containment
2	Miscellaneous small releases outside containment	Spills Leaks and pipe breaks
3	Radwaste system failures	Equipment failure Serious malfunction or human error
4	Events that release radioactivity into the primary system	Fuel failures during normal operation; transients outside expected range of variables
5	Events that release radioactivity into the secondary system	Class 4 & heat exchanger leak
6	Refueling accidents inside containment	Drop fuel element Drop heavy object onto fuel Mechanical malfunction or loss of cooling in transfer tube
7	Accidents to spent fuel outside containment	Drop fuel element Drop heavy object onto fuel Drop shielding cask--loss of cooling to cask Transportation incident onsite
8	Accident initiation events considered in design-basis evaluation in the Safety Analysis Report	Reactivity transient Rupture of primary piping Flow decrease--steamline break
9	Hypothetical sequences of failures more severe than Class 8	Successive failures of multiple barriers normally provided and maintained

Table 2.3-2

SUMMARY OF RADIOLOGICAL CONSEQUENCES OF POSTULATED ACCIDENTS

Class	Event	Individual Doses At the Exclusion Distance (Fraction of 10 CFR 20 Limit)	Dose Commitment To Population (Man-Rem)
1.0	Trivial incidents	*	*
2.0	Small releases outside containment	*	*
3.0	Radwaste system failures		
3.1	Equipment leakage or malfunction	0.016	9.6
3.2	Release of waste gas storage tank contents	0.064	38
3.3	Release of liquid waste storage tank contents	0.013	0.900
4.0	Fission products to primary system (PWR)	NA	NA
5.0	Fission products to primary and secondary systems (PWR)		
5.1	Fuel cladding defects and steam generator leaks	*	*
5.2	Offdesign transients that induce fuel failure above those expected and steam generator leak	0.005	0.43
5.3	Steam generator tube rupture	0.26	17
6.0	Refueling accidents		
6.1	Fuel bundle drop	0.008	0.52
6.2	Heavy object drop onto fuel in core	0.17	11

*Evaluated as routine release in section 2.4.

Table 2.3-2
(cont'd)

SUMMARY OF RADIOLOGICAL CONSEQUENCES OF POSTULATED ACCIDENTS

Class	Event	Individual Doses At the Exclusion Distance (Fraction of 10 CFR 20 Limit)	Dose Commitment To Population (Man-Rem)
7.0	Spent fuel handling accident		
7.1	Fuel assembly drop in fuel storage pool	0.008	0.52
7.2	Heavy object drop onto fuel rack	0.0089	0.62
7.3	Fuel cask drop	0.0027	0.18
8.0	Accident initiation events considered in design basis evaluation in safety analysis report		
8.1	Small loss-of-coolant	0.00053	0.086
8.1	Large loss-of-coolant	0.48	89.0
8.1a	Instrument line break	NA	NA
8.2(a)	Rod ejection accident	0.052	9.0
8.3(a)	Small MSLR	0.003	0.053
8.3(a)	Large MSLR	0.003	0.53

2.4 Radioactive Discharges - It is TVA's policy to keep the discharge of all wastes from its facilities, including nuclear plants, at the lowest practicable level by using the best and highest degree of waste treatment available under existing technology, within reasonable economic limits.

To implement this policy, treatment of radioactive wastes provided by the original Watts Bar plant design has been augmented to provide additional margins against environmental impacts resulting from releases of radioactive materials. All equipment installed by TVA to reduce radioactive effluents to the minimum practicable level will be maintained in good operating order and will be operated to the maximum extent practicable. Basically, the design modifications were made to increase the holdup time of gaseous wastes, reduce releases of iodine in condenser offgas, and reduce releases of radioactive products in water. The latter is achieved by using Ag-In-Cd control rod absorber instead of B_4C to reduce tritium generation, by recycling tritiated liquid, and by treating steam generator blowdown during periods of steam generator leaks. The waste treatment facilities can be modified or supplemented if a higher degree of treatment should be required in the future.

The original design provided 45-day holdup of radioactive gases to reduce their activity and provided for tritiated water to be released to the environment under controlled conditions to avoid significant buildup of tritium in the primary coolant. Studies to further reduce these discharges resulted in adoption of the present design

which provides 60-day holdup of gases, significantly reduces releases of tritium by recycling and reduces the amount of iodine in the condenser offgas by processing the gaseous effluents through high efficiency particulate (HEPA) and charcoal filters during periods of significant primary-to-secondary leakage.

Recycling minimizes the release of tritium and other radioactive material that would have been released with the original system. The following table compares expected radwaste system releases during normal operation of the original design and of the design adopted, based on an annual average operation at 100 percent of full power and 0.25 percent failed fuel.*

Radioactive Releases, Ci/yr

	Gases	Liquids
Original Design (45-day holdup no tritium recycle, B_4C control rods)	3,400	1,590 tritium 4.5 other
Present Design (60-day holdup tritium recycle, Ag-In-Cd control rods)	2,900	140 tritium[a,b] 0.46 other

a. Tritium vapor releases are about 380 ci/yr.
b. Does not include releases (0.46 Ci) due to primary-to-secondary leakage.

1. Basis for evaluation of radioactive discharges - The principal routes of release or removal of radioactivity from the Watts Bar Nuclear Plant are:

1. liquid discharges
2. gaseous discharges
3. solid radwaste disposal

*0.25 percent failed fuel is defined as defects in fuel pins which produce 0.25 percent of the core power.

TVA has investigated the predicted level of failed fuel for the Watts Bar plant and has concluded (based on operating experience and predictions of fuel failure rates) that the assumption that the presence of clad defects in fuel pins which produce 0.25 percent of the core power is a reasonable and obtainable level of fuel performance over the life of the plant. Good fuel performance is ensured by proper fuel design, good fabrication techniques, and a comprehensive quality assurance program.

The fuel pins are zircaloy tube containing UO_2 pellets. Inspections and tests by TVA or its consultant, as well as by the fuel fabricator will ensure that the fuel is fabricated as designed. The design of the Watts Bar fuel will be similar to that in plants presently operating or about to be operating but will have the benefit of the experience gained in operation of these plants. The radwaste systems and shielding in the plant will be designed to handle the radwaste from operation with 1 percent failed fuel in both units. The evaluation of radioactive releases is based on 0.25 percent failed fuel in both units. Conservative assumptions are made regarding power level, load changes, and shutdown releases.

Reactor coolant is continuously purified of fission and corrosion products in a sidestream system (Chemical and Volume Control System) which includes demineralizers and filters. Normally, this stream is returned to the reactor coolant system. From time to time, however, this stream is diverted to a holdup tank in the Boron Recovery System. This is done in connection with chemical shim control

adjustment, load changing, and degassing of the coolant at shutdown. A portion of the dissolved gas in the coolant, which includes hydrogen plus krypton and xenon, is released in the holdup tank and is transferred to the gas decay tanks. The liquid is passed through demineralizers for additional purification, and is fed to a boric acid evaporator. In the gas stripper portion of the evaporator, the remaining dissolved gas is removed from the coolant and is transferred to the gas decay tanks. The liquid, a boric acid solution, is concentrated to about 12 percent boric acid. The concentrate is transferred to the boric acid tanks for reuse in the reactor coolant system. The distillate is transferred to the primary makeup water tanks for reuse. No liquid release occurs as a result of this processing.

Most leakage from radioactive systems is collected in closed drains and recycled thereby resulting in essentially no liquid releases. However, a small amount of leakage from some valves and seals is not recoverable and must eventually be processed by the radioactive waste disposal system for release to the environment. Estimated releases from the Watts Bar plant are based in part on the liquid radwaste produced by a nonrecyclable leakage of 20 gallons of primary coolant per day per unit, excluding primary-to-secondary leakage. An extended treatment system has been included in the plant design to process the steam generator blowdown in the event of significant primary-to-secondary leakage. The condenser offgas system is equipped with HEPA and charcoal filters to limit iodine and particulate releases. Releases from this system are estimated assuming a continuous 20-gallon per day

primary-to-secondary leak in each unit. The releases of radioactivity due to leakage of liquid from the secondary system are estimated based on an assumed leak rate of 20 gallons per day per unit and a carryover of 0.1 percent in the steam generator. The resulting release due to secondary system leakage is only 0.05 Ci and is not considered further. Parameters used in estimating releases of radionuclides in gaseous and liquid effluents are based on operating experience and experimental data, where available, and effort is made to select realistic parameters.

Dilution of liquid releases to the reservoir is based on an average cooling tower blowdown flow of 28,000 gallons per minute.

(1) Liquid discharges -

(a) Liquid treatment systems -

Radioactive liquid wastes will be evaporated as required and the residues packaged for offsite disposal. Processed water whose tritium concentration is 10 percent or more of the primary coolant tritium concentration will be returned for reuse as reactor makeup. Miscellaneous low-level liquid wastes containing less tritium are collected, analyzed, filtered, and discharged.

Small quantities of radioactive wastes will be released to the discharge pipe for dilution with the plant water discharges. Table 2.4-1 summarizes the estimated annual quantities of liquid discharges from the various sources within the plant. Estimated releases of radionuclides in liquid effluents are

shown in Table E-1 of Appendix E. Radioactive liquid waste in passing from the tanks to the discharge pipe goes through a valve which is locked closed when not in service, a valve controlled by a radiation monitor, and a valve that is interlocked with a flowmeter so that it cannot be opened unless a dilution flow of at least 28,000 gal/min exists. These controls assure that the liquid waste will be diluted and that concentration limits will not be exceeded.

The treatment of radioactive detergent or laundry waste in the sewage treatment facility has been considered and rejected. The quantity of radionuclides expected to be released from these sources is small. Contamination of the sewage treatment facility would be small but is not considered warranted.

Since the Watts Bar Nuclear Plant is located immediately downstream from the Watts Bar Hydro Plant and Dam, when the hydro units are not operating there may be insufficient water available to provide proper dilution of the cooling tower blowdown from the nuclear plant. Steam generator blowdown is not released during the time the hydro plant is not in operation. Instead it is collected in a 150,000-gallon storage tank until hydro plant operation is resumed. All radioactive liquid effluents from the nuclear plant are interlocked so that discharges to the river cannot occur while the hydro plant is

not operating. Design of the routing of radioactive liquid waste discharges has been changed so that they do not empty into the holding pond. The liquid radioactive wastes will be diluted with the cooling tower blowdown and released to the river through a diffuser in order to provide rapid dilution with the riverflow.

Watts Bar Nuclear Plant facilities are believed to be fully adequate to process radioactive liquid waste to a level which can be considered as low as practicable. The bases for tank sizes for storing reactor coolant and liquid radwaste are:

Chemical Volume Control System holdup tank (224,000-gallon capacity) - The size of these tanks is based on a cold shutdown and startup of both units simultaneously, with one unit at 80 percent of core life and the other at 70 percent of core life. It is assumed that both 30 gal/min evaporators are in service at 75 percent capacity while the tanks are being filled. No other operational condition is likely to impose a greater load on the tanks. The reason the Watts Bar holdup tank capacity is smaller than that of some earlier plants is that credit had not been taken for the evaporators being in operation at those plants.

Monitor tanks (18,000-gallon capacity) - Tests of the prototype Westinghouse boric

acid evaporator showed that boric acid carryover in the distillate was very low (<10 ppm boron). For this reason it was decided that the distillate could be sent directly to the primary makeup water storage tank rather than sending it to a monitor tank first. The single monitor tank can be used for distillate from the boric acid evaporators and/or the waste evaporators.

Laundry and hot shower tank (1,200-gallon capacity) - The two 600-gallon tanks are sized to receive the expected maximum daily input of laundry and hot shower drains. Larger tanks would permit less frequent discharges, but would not appreciably decrease the amount of radioactivity released.

Waste condensate tanks (5,000-gallon capacity) - Two 1,500-gallon tanks were provided initially. A third 2,000-gallon tank has been added. Waste condensate can also be routed to the 10,000-gallon cask decontamination tank. This should be sufficient to handle the waste condensate liquid effluent.

Primary makeup water storage tanks (374,000-gallon capacity) - Watts Bar will have two 187,000-gallon tanks. This will be adequate to handle the storage of the primary makeup water.

(b) Tritium recycle - The only feasible alternative to the recycle of tritiated water is to permit its controlled release to unrestricted areas. Tritium recycle was

selected because it is consistent with TVA's policy regarding radioactive discharges, and it has been determined that retention of tritiated water at an AEC-approved disposal area is feasible. This permits a minimal liquid radioactive release. Figures 2.4-1 and 2.4-2 show the original liquid radwaste system and the system as modified, respectively.

To minimize discharge of tritium, tritiated water from expected sources will be recycled by segregating drains which contain tritium from those which do not. Any liquid which shows a tritium concentration which is higher than 10 percent of the concentration of the primary coolant will be recycled and not released. This effectively recycles more than 90 percent of the tritium collected as liquid. Plant operating procedures will be implemented to assure that during all periods tritium levels in the condenser vacuum pump effluent, steam generator blowdown distillate, and any other effluents are within acceptable limits.

The intended method for avoiding tritium release is to recycle tritiated water back into the primary system until the primary coolant tritium concentration reaches a maximum desirable level from an operating personnel dose standpoint. The exact concentration which will be considered the maximum safe level will be determined largely by doses which could be received by plant personnel during refueling operations. Tentatively, this concentration has been set at 2.5 μCi/ml for analysis purposes, and based on the assumptions used for estimating routine releases, this level would be reached about

8 years after startup. Tritiated water will be periodically extracted from the primary system to maintain the maximum safe level. TVA will continue its investigations into the questions posed by tritium recycle and the transfer of tritiated water to an AEC-approved disposal area. If future developments indicate that it is desirable to permit controlled releases of tritium, TVA will modify its operations accordingly.

Figure 2.4-3 shows the buildup of tritium in the primary system and in the refueling water volume for each unit based on maintaining an upper limit of 2.5 μCi/ml in the primary system. The upper curve describes the tritium concentration in the primary system as a function of time. The tritium concentration of the refueling water is given by the bottom of each vertical line. For example, during the refueling outage at year 6, the tritium concentration in the refueling volume (not including the spent fuel pool) is 0.9 μCi/ml. The water returned to the refueling water tank after the refueling is at this same concentration. The concentration in the primary system following refueling is 1.9 μCi/ml and increases to 2.4 μCi/ml during the subsequent fuel cycle.

At any time except during refueling, the volume of water in the primary system is approximately 280,000 gallons. This includes water in the reactor coolant system, the primary makeup water storage tank, the CVCS holdup tank, the CVCS monitor tank, and the tritiated waste holdup tank. The tanks are assumed to be partly full at normal operating levels. The refueling water volume is approximately 350,000 gallons. Amounts of water that must be removed to maintain a maximum tritium concentration of 2.5 μCi/ml are noted on the curve.

The maximum amount of tritium in storage at any time is about 9,100 Ci (both units). Note that without tritium recycle (maximum tritium concentration of 2.42 μCi/ml) the total would be 9,000 Ci.

Tritiated water bled from the primary system will be shipped offsite as necessary as low specific activity liquid waste for retention at an AEC-approved disposal site. A connection has been provided in the rail car room in the auxiliary building through which water from either primary makeup water storage tank can be loaded into tank trailers or rail tank cars.

It is impossible to totally prevent release of tritium from a nuclear power plant by reasonable means. Vaporization from the refueling canal and spent fuel pit carries off significant amounts of tritium. In addition, some secondary liquids and vapors must be released from the plant and at times these will contain small amounts of tritium which have leaked into the secondary system from the primary system. A major source of this type of tritiated discharge will be steam generator blowdown during periods of primary-to-secondary leakage in the steam generator. Other expected sources of tritium release include purging of the containment and fuel storage areas, condenser vacuum pump effluent during periods of steam generator leaks, and any leakage which is at a tritium concentration too low to be recycled.

Secondary system blowdown, even though it contains tritium due to a leak, must be discharged.

It is not practical to recycle the water for primary system makeup because a prohibitive amount of storage capacity would be needed. Recycling the processed blowdown liquid as secondary system makeup is of no benefit since the tritium would be discharged when normal blowdown was resumed.

The amount of tritium discharged will vary depending on the concentration of tritium in the primary coolant, the primary-to-secondary leakage rate, the steam generator blowdown rate, and the period of operation with a primary-to-secondary leak. Assuming tritium recycle, if each reactor had a primary-to-secondary leak of 20 gallons per day which persisted for a year, the total tritium release would be about 140 curies.

(c) <u>Extended treatment of steam-generator leaks</u> - Radioactive discharges which would occur as a result of release of steam generator blowdown during periods of steam generator primary-to-secondary leaks are held to the lowest practicable level by modification of the original plant design to allow processing of blowdown when it contains radioactive products.

An auxiliary blowdown system is provided for the four steam generators of a unit when one or more of the steam generators has a primary-to-secondary leak. Blowdown is diverted from the normal blowdown and passed through a heat exchanger where the temperature is reduced to about 150°F, thus eliminating vapor effluent. The liquid is then sent to the floor drain collector

tank in the waste disposal system. From the tank, the liquid is processed through the auxiliary evaporator. Condensate is collected, analyzed, treated as necessary, and released to the plant discharge pipe.

When the blowdown liquid monitor senses an activity of 6×10^{-6} μCi/ml, an alarm will occur and blowdown valves will be closed automatically. At this level, with a 100 gal/min blowdown rate, the radioactivity level in the plant discharge flow (26,000 gal/min) would be 2×10^{-8} μCi/ml. The condenser offgas monitor will be set to alarm at 6×10^{-5} μCi/ml.

The monitoring system will be backed up by periodic laboratory analysis of blowdown liquid. Laboratory analysis will permit detection of leaks too small to be detected by the monitors and will also show the presence of tritium which the monitors will not detect. In any case, if a large leak is detected, unit shutdown will be initiated. In most cases, however, unit operation will be continued while the situation is being evaluated. If the leak is small enough that radioactivity releases are below the limits in the proposed Appendix I to 10 CFR Part 50, operation will continue with the normal blowdown system or with the radwaste system not including the auxiliary waste evaporator. If Appendix I limits for liquid discharges would be exceeded, the auxiliary system including the auxiliary waste evaporator will be used to process blowdown. The length of time that operation in this mode is continued will depend

on a variety of factors, including the offsite doses due to releases of radioactivity in the condenser offgas and processed blowdown liquid, the degree of contamination of the secondary system, and the ability of the blowdown processing system to handle the blowdown flow.

During a primary-to-secondary leak, the secondary system becomes contaminated with radioactive material and chemicals from the primary system. This continues until the unit is shut down and the leak is repaired. After repairs have been made, blowdown processing will be continued until the radioactivity content is low enough that releases resulting in significant doses will occur.

If, for example, a 1 gal/min leak of primary fluid containing 2.5 μCi/ml of tritium were to continue for 10 days, a total of 137 Ci would be transferred to the secondary system. Assuming a 12-gal/min blowdown rate during the 10-day leak period, 37 Ci would be processed through the blowdown treatment system and be released to the reservoir as liquid waste. At the end of the 10-day leak period, the secondary coolant system would still contain radioactive materials in addition to tritium. Therefore, the normal practice would be to continue processing the blowdown liquid through the radwaste system for some time after the leak has been repaired.

The auxiliary evaporator provided will handle a continuous contaminated blowdown flow rate of 12 gal/min with margin for downtime for minor repairs. The floor drain collector tank can accumulate blowdown while the evaporator is shut down. If the processing system is unable to keep up with the blowdown flow, the unit will be shut down. The process for treating steam generator blowdown liquid is the same whether a primary-to-secondary leak exists in one or both units. In either event, the total blowdown flow rate for treatment is limited to about 12 gal/min.

In normal operation, the blowdown rate is set to maintain a maximum dissolved solids content of 125 ppm in the secondary side of the steam generator. The rate is determined primarily by the amount of condenser cooling water inleakage. In the event of a primary-to-secondary leak, the dissolved solids concentration would be allowed to increase to 600 ppm. The required blowdown rate under these conditions would depend primarily on the amount of boric acid leaking into the secondary system. Sodium phosphate must be added to neutralize the boric acid. With a limit of 600 ppm total dissolved solids, there is room for about 50 ppm of boron. A 12-gal/min blowdown rate would accommodate a leak rate of 0.6 gal/min with 1,000 ppm boron in the primary coolant, 1.2 gal/min at 500 ppm, and 6 gal/min at 100 ppm. Any combination of condenser inleakage with primary-to-secondary steam generator leakage which necessitated a blowdown rate above the capacity of the auxiliary evaporator would require shutdown of the unit.

(3) Conclusion - It is concluded that the decisions to recycle tritium and to provide for extended treatment of steam generator blowdown have resulted in a design which will hold releases of radioactive liquids to the lowest level practicable.

(2) Gaseous discharges -

(a) Gaseous treatment systems

The gaseous radwaste system collects and processes gaseous radioactive wastes originating from degassing of reactor coolant, displacement of cover gas as liquids accumulate in various tanks, miscellaneous equipment vents and relief valves, and sampling operations and automatic gas analysis for hydrogen and oxygen in cover gas. These waste gases are collected, compressed and dehumidified, and stored in gas decay tanks for at least 60 days to allow for radioactive decay (Figure 2.4-4). Compressed gas is recycled as a cover gas for the various uses to minimize the volume of gaseous wastes released and to maximize the time for radioactive decay. After decay, the only significant radioisotopes released to the environment are Kr-85, Xe-133, and Xe-133m. The estimated annual releases of these isotopes are shown in Table F-1 of Appendix F. Each gaseous decay tank has provisions for sampling the tank contents before beginning a release. During normal operation, gases are discharged intermittently at a controlled rate from these

tanks through one of the two monitored shield building vent pipes which discharge near the top of each reactor building. The gas from the decay tank is passed through a HEPA filter and two charcoal iodine filters. The shield building vent gas monitor sample is continuously collected during venting through an isokinetic probe in the vent pipe. The sample is monitored by three separate systems which continuously measure and record gaseous, particulate, and radioiodine discharges. An annunciator and alarm system are provided in the control room which actuate during high activity levels in the vent pipe. A trip valve in the discharge line is closed automatically by a high activity level indication in the plant vent.

Waste gases are released from the gaseous decay tanks through either of two monitored shield building vent pipes. One release point is through and near the base of the unit 1 shield building dome and the other is through and near the base of the unit 2 shield building dome. The dome release points are considerably higher than the other plant building roofs. The shield buildings are located on an east-west axis. The other plant buildings lie between the shield buildings and to the south of the shielding building axis. The vents are located in the northwest and northeast sectors, respectively, of the unit 1 and unit 2 shield building domes. Waste gas from the gas decay tanks can be discharged through either of the two vents. Thus, regardless of wind direction, it will usually be possible to select one of the two release points such that waste gas flow is not toward the other plant buildings. Even in the event gases are being released from one of the two vents under atmospheric

conditions when air flow is from the south, the released gases must pass around or over the shield building dome. If these radioactive gases should enter plant buildings, they would be detected by inplant radiation monitors, and the release could be terminated if necessary.

The auxiliary building ventilation systems provide ventilation for all areas of the auxiliary building including the refueling area, the waste packaging area, and the cask loading area. Radioactive liquid wastes that originate in the reactor coolant system contain dissolved radioactive gases. If such liquids should be exposed to the surrounding atmosphere, as in a spill, dissolved gas is released and is picked up in the building ventilation exhaust system. Most of the liquid wastes, however, remain confined in sealed-piping systems and equipment. Pumps, tanks, and equipment in the liquid waste system have vent connections that lead directly to the auxiliary building ventilation exhaust ducts. The ventilation system normally discharge air through the auxiliary building vent which is filtered with HEPA filters. The auxiliary building exhaust vent is fitted with a monitor identical to those installed in the shield building vent pipes so that gaseous, particulate, and radioiodine discharges are continuously monitored and recorded. An excessive activity level in this vent is alarmed in the control room. Upon detection of high vent activity, the normal auxiliary building ventilation system is automatically isolated and the auxiliary building gas treatment system placed into operation. This system provides for filtration and charcoal adsorption of the effluent from the auxiliary building. Exhaust air from this ventilation system is discharged

through one of the two shield building vent pipes. The releases from the auxiliary building ventilation system are evaluated on the basis of 10 gallons per day released to the auxiliary building from the makeup and purification system. Iodine releases are based on 0.01 percent of the iodine in the leak being released to the environment.

If the secondary coolant system becomes contaminated due to primary-to-secondary leakage, radioactive iodine and noble gases would be released to the atmosphere through the condenser mechanical vacuum pump exhaust. Radiation dose due to these releases will be an important factor in determining how long operation can continue with such leakage. Calculated releases for this situation are based on a continuous primary-to-secondary leakage rate of 20 gallons per day in each unit. To minimize the amount of iodines (and particulates) released via this route, high-efficiency particulate and charcoal filters have been included in the plant design. A continuous sample is drawn from the condenser vacuum pump exhaust and monitored by a scintillation crystal-photomultiplier detector for gaseous activity indicative of a primary-to-secondary system leak. Filters in the condenser offgas lines, which are normally on bypass, will be placed online whenever the installed monitors indicate the presence of radioactivity in the offgas.

If reactor coolant leaks into the containment exist and are not collected in closed systems, then releases of radioactive material result when the containment atmosphere

is purged. This release route is evaluated assuming 50 pounds of primary coolant leakage per day and purging of each primary containment twice a year. Prior to purging, the containment cleanup system may be actuated to reduce the particulate and iodine inventory by circulating the containment air through HEPA and charcoal filters. The purge exhaust also passes through charcoal filters, further reducing the iodine concentration. Tritium in containment atmosphere released at each purge is expected to be about 4.3 curies. This assumes that the containment is saturated at 100°F, and that the water vapor contains 2.5 μCi of tritium per gram. Tritium in containment ventilation exhaust air at each refueling is estimated to be about 190 curies. It is assumed that the release period is 13 days.

If there is steam leakage or leakage from the feedwater system concurrently with primary-to-secondary leakage, some iodine would be released to the turbine building atmosphere and would be exhausted to the atmosphere by the turbine building ventilation system. This is not an important route of release of noble gases, since all noble gases released to the secondary system are assumed to be released via the condenser offgas without holdup. Calculated releases for this situation are based on a continuous primary-to-secondary leakage rate of 20 gallons per day in each unit and steam leakage of 835 pounds per day.

The continuous monitoring systems for the building vents have the following sensitivities:

Type of Emission	Minimum Detectable Discharge Rate (Ci/s) Shield Building	Auxiliary Building	Service Building
Noble gases	1.9 (-8)	1.0 (-4)	5.7 (-6)
Particulates	1.3 (-8)	1.0 (-7)	5.7 (-9)
Iodines	1.3 (-8)	1.0 (-7)	5.7 (-9)

The monitor on the condenser offgas system will detect noble gases with a sensitivity of 4.7×10^{-10} Ci/sec. Set points for alarm and actuation functions will be established for the monitors to alert operating personnel to increase in radionuclide concentrations in gaseous effluents. More sensitive laboratory analyses will also be performed for particulates and iodines.

(b) Alternative gaseous radwaste systems - The original design of systems used for treatment of gaseous radioactive discharges and the extended treatment system adopted were described in the Watts Bar draft environmental statement dated May 14, 1971. These designs provided for 45-day and 60-day holdup of gases, respectively, and are shown schematically in figure 2.4-4. While the effectiveness of the design adopted is sufficient for environmental protection, other alternatives for this purpose have been considered so as not to foreclose prematurely any options which might further reduce releases to the environment. These include cryogenic distillation of gases, absorption of gases, and recombination of hydrogen with oxygen. All of these systems are designed to reduce the plant's gaseous radioactive effluents.

Estimated releases of radionuclides for all systems considered are shown in Table F-1 of Appendix F.

In order to assess the adequacy of the chosen extended treatment system when compared to the other alternatives, each system will be evaluated in terms of cost, feasibility, adaptability to the Watts Bar plant, and environmental benefits.

Cryogenic distillation - In this system, radioactive gases are removed by liquefying them at low temperatures and are stored onsite. The system (figure 2.4-5) would be installed in the vent line downstream of the gas decay holdup tanks. Its main advantage when compared to the 60-day gas decay tank system is that it removes more than 99 percent of the radioactivity remaining in the tank at the time of release.

Cryogenic systems for producing industrial oxygen were developed 30 to 40 years ago. However, the application of a cryogenic system at a nuclear power plant could have performance problems unrelated to those encountered in other industries. The problems associated with krypton-85 storage onsite and its eventual disposal must also be considered.

In the cryogenic extended radwaste treatment system, krypton and xenon are removed from the vent gases and stored in tanks. The holdup of krypton-85 would increase the potential for the accidental release of the concentrated waste to the environment and would require long-term storage (greater than 60 days) and ultimate disposal of gaseous radioactive waste.

While the future potential of the cryogenic system may offer advantages, it has not been used for the treatment of radioactive gaseous wastes in large commercial nuclear power plants. As compared to simple gas decay holdup tanks, the cryogenic system is a rather complicated mechanical system utilizing pumps, compressors, refrigeration systems, piping, and tanks. Because of the lack of experience with this type of service, some question exists as to the reliability of the cryogenic system. Its reliability would not be as high as that of the gas decay tanks which is essentially a passive system and has been used in radioactive gas treatment for nuclear plants similar in design to Watts Bar. The cryogenic distillation system is estimated to cost $[illegible]00,000.

Absorption by solvent (ORDGP system) - This system (figure 2.4-6) shows promise for removing krypton and xenon from a gas stream by selective absorption in a fluorocarbon solvent. The performance and reliability of this type system has not been proven in nuclear plant service. The only experience to date has been with bench and pilot plant size systems. While this system shows promise for future application to nuclear plants, it was decided that further development would have to be done before it could become an acceptable alternative for large-scale applications such as Watts Bar. The estimated cost of the ORDGP system is $400,000.

Hydrogen recombiner - The recombiner (figure 2.4-7) would be integrated into the present [illegible] with [illegible] gas [illegible] to be [illegible] in the [illegible] tanks and the effective holdup time is extended to a year or more. Due to the long half-life of krypton-85, the additional holdup time has little effect on the release of this isotope. [illegible] the recombiner [illegible] the use of [illegible] the estimated cost of [illegible] $[illegible]

[illegible] with the cryogenic or ORDGP systems, the [illegible] removing [illegible] from the decay tanks. With the recombiner, all of the [illegible] isotopes except krypton-85 would be reduced to [illegible] the cryogenic or ORDGP system, the noble [illegible] in a small volume and placed in a [illegible] ORDGP system is not commercially available at present [illegible] process is still undergoing development. It is possible that [illegible] one firm would be in a position to offer the equipment in the near future.

TVA has concluded that the 60-day holdup alternative represents the best balance of economic cost, reduction in environmental impact, and feasibility. Therefore, the benefits to be gained by further reducing the radioactive gaseous

releases are not commensurate with the cost associated with the reduction. To implement this conclusion, TVA is proceeding with the design and procurement for the 60-day gas decay tank alternative.

(8) Solid radwaste disposal - The solid radwaste system collects, processes, stores, packages, and prepares for shipment solid radioactive waste materials produced through operation of the two reactor units.

The waste disposal system is designed to package all solid wastes in standard 30- or 55-gallon drums for removal to disposal facilities. Concentrates from the waste evaporator and spent ion exchange resins are packaged in drums previously filled with a mixture of cement and vermiculite.

Dry solid wastes, such as contaminated rags, paper, clothing, spent filter elements, laboratory apparatus, small parts and equipment, and tools, are collected in suitable containers placed throughout the plant. Compressible wastes are packed into 55-gallon drums with a baling machine. Large-sized contaminated items are encapsulated in steel containers or encased in concrete.

The wet solids and dry solids are packaged and shipped from the plant in accordance with applicable AEC requirements, U.S. Department of Transportation 49 CFR Part 173 requirements, and the regulations of those states through which the wastes pass en route to the disposal area. Transportation of the solid radwaste is discussed in section 2.1.

2. Estimated increase in annual environmental radioactivity levels and potential annual radiation doses from principal radionuclides - Environmental radioactivity levels due to releases to unrestricted areas from the Watts Bar Nuclear Plant will be so low as to be indistinguishable from natural background radiation. However, TVA has calculated the expected increase in radioactivity levels and potential radiation doses to the population as a result of these low-level releases.

(1) Radionuclides in liquid effluents - The following doses to biota including man are calculated for exposures to radionuclides routinely released in liquid effluents:

1. Doses to man
   a. from the ingestion of water
   b. from the consumption of fish
   c. from water sports
2. Doses to terrestrial vertebrates from the consumption of aquatic plants
3. Doses to aquatic plants, aquatic invertebrates, and fish

The organisms and pathways that are considered in this report are those that are judged to be the most significant because of species, habitat, diet, or patterns of living. Conservative assumptions are applied in these analyses which should result in overestimation of the doses.

Internal doses are calculated using methods outlined by the International Commission on Radiological

Protection [illegible] describe internal retention of radionuclides with a single exponential model. This model is used for estimating the doses to man from ingestion of water and consumption of fish and for estimating the doses to terrestrial vertebrates from the consumption of green algae. For calculating the internal doses to aquatic organisms it is assumed that an equilibrium exists between the activity concentrations in the water and those inside the organisms.

Internal doses to man are calculated for the bone, G.I. tract, thyroid, and total body.

External doses are estimated using either an infinite or a semi-infinite, homogeneous-medium approximation depending on whether the organism is considered to be immersed in or floating on the water.

A more detailed discussion of the analytical methods used in calculating these doses and a detailed listing of the results are given in Appendix [illegible].

(a) Radionuclides in gaseous effluents -

The following doses to humans living in the vicinity of the Watts Bar Nuclear Plant are calculated for routine releases of radioactive gases:

1. External beta doses
2. External gamma doses
3. Thyroid doses due to inhalation of gaseous iodine
4. Thyroid doses due to concentration of radioactive iodine in milk produced near the site.

not practicable to treat iodine releases from the turbine building ventilation system because of the large flow rates and small concentrations involved. The estimated releases of iodine are based on numerous assumptions related to operating conditions as well as physical and chemical characteristics of iodines. Action will be taken to ensure that actual iodine releases are kept as low as practicable.

A more detailed description of the analytical methods used in calculating these doses and a detailed listing of results are given in Appendix F. As is discussed in Appendix F, it is believed that the meteorological data used in the calculations in this report will lead to the prediction of air concentrations and radiation doses which are higher than would be experienced during reactor operation.

(3) Summary of radiological impact -

Table 2.4-2 summarizes the radiation doses calculated for releases of radionuclides in gaseous and liquid effluents during normal operation of the Watts Bar Nuclear Plant. The external radiation dose from outside liquid storage tanks is also shown and is discussed in Appendix . The increases in radioactivity and potential radiation doses shown include only those resulting from operation of the Watts Bar Nuclear Plant. The cumulative increases in radioactivity and potential radiation doses from operation of Watts Bar Nuclear Plant and Sequoyah Nuclear Plant are discussed in Appendix H.

A comparison of doses resulting from the operation of Watts Bar Nuclear Plant to those occurring from natural radioactivity assists in placing the doses from Watts Bar in perspective. Near the plant site the average annual dose from naturally occurring external sources of radiation is 125 mrem (Table 2.4-3). An individual receives an additional dose of approximately 20 mrem per year from naturally occurring internal sources. Therefore, the average total dose from natural radioactivity in the vicinity of the Watts Bar plant is approximately 145 mrem per year. Individual doses vary widely around this average value because of local differences in the concentrations of terrestrial radioactivity and because of variances in dose rates within different types of buildings. Large variations are also observed between different areas within the United States because of the dependence of cosmic ray dose rates on altitude and geomagnetic latitude. Due to these variations, the annual total-body dose to individuals in the United States from natural radioactivity range from approximately 110 mrem to 240 mrem.

A hypothetical individual at the site boundary would receive a maximum annual dose of 10 mrem from the normal operation of the Watts Bar Nuclear Plant. For this individual to receive the maximum dose he would have to stand in the open at the highest dose point on the site boundary for 24 hours a day, 365 days per year. The maximum dose to the hypothetical individual is 7 percent of the dose from natural background radiation. The maximum dose to an actual individual should be significantly less than the dose to the hypothetical individual.

The population dose within 50 miles of Watts Bar from naturally occurring radioactivity is estimated to be approximately 145,000 man-rems in the year 2000 (Table 2.4-3). The population dose in the year 2000 due to normal operation of the Watts Bar Nuclear Plant is calculated to be 31 man-rems (Table 2.4-2), which is only 0.02 percent of the dose to the population within 50 miles from natural background radiation. Because population groups beyond 50 miles were considered in dose estimates for radionuclides in liquid effluents the population dose due to operation of the Watts Bar Nuclear Plant is actually less than 0.02 percent of the dose to the same population due to natural background radiation.

TVA has evaluated the potential radiation dose from a broad spectrum of possible pathways of exposure. It should be emphasized that it is possible to theoretically calculate an environmental radioactivity level or potential radiation dose that is minutely small. The dose calculated in this evaluation is only a small fraction of the dose from the natural background radiation and is, in fact, much less than the variations in natural background radiation doses. It is concluded that the Watts Bar Nuclear Plant will operate with no significant risk to the health and safety of the public.

5. Environmental radiological monitoring program -

(1) General - The preoperational environmental radiological monitoring program has the objective of establishing a baseline of data on the distribution of natural and manmade radioactivity in the environment near the plant site. With

this background information, it will then be possible to determine, when the plant becomes operational, what impact the power plant is having on the environment.

Field staffs in TVA's Division of Environmental Research and Development and the Division of Forestry, Fisheries, and Wildlife Development will carry out the sampling program outlined in Tables 2.4-4, 2.4-5, and 2.4-6. Sampling locations are shown in figures 2.4-8 and 2.4-9. All of the radiochemical and instrumental analyses will be conducted in a central laboratory at Muscle Shoals, Alabama. Alpha and beta analyses will be performed on a Beckman Low Beta II low background proportional counter. A Nuclear Data Model 2200 multichannel system with 512 channels will be used to analyze the samples for specific gamma emitting isotopes. Data will be coded and punched on IBM cards or automatically punched into paper tape for computer processing specific to the analysis conducted. A digital computer will be used to solve multimatrix problems associated with identification of gamma-emitting isotopes.

A study of environmental radiation levels will be initiated approximately two years before startup and will continue through low-power testing and operation of the plant.

The environmental monitoring program outlined herein is subject to change based upon continued evaluation of the program now being conducted at the Browns Ferry and Sequoyah Nuclear Plant sites. The program will be coordinated closely with

other agencies' programs, such as the nationwide fallout sampling and water quality networks and the radiological health program of the State of Tennessee.

The program will include measurements of direct gamma radiation and sampling of airborne radioactivity, fallout particulate matter, rainfall, surface water, well and public water supplies, soil, vegetation, milk, fish, clams, bottom sediment, plankton, and river water. The extent to which various aspects of the program will be carried out takes into account data available from other sources; however, the program as outlined is self-sufficient. It will be continually evaluated to determine that the most sensitive vectors are being sampled to properly evaluate exposure of the population. Continual evaluation also allows planning an effective system with respect to sampling frequencies, locations, and laboratory analyses.

(2) Atmospheric monitoring - Ten atmospheric monitoring stations have been planned for Watts Bar Nuclear Plant. Two of these monitors are located on the plant site in the two quadrants of greatest wind frequency. One additional station will be placed at the point of maximum predicted offsite concentration of radionuclides if this point varies significantly from present proposed locations. Six other stations are located at perimeter areas out to 10 miles. These stations are instrumented and telemeter data into the control room. Generally these stations are located in or near the more densely populated areas within 10 miles of the plant in those quadrants having the greatest wind frequency on an annual basis (see figure 2.4-8).

Two other monitors are located at distances out to 25 miles. These remote monitors are used as control or baseline stations. Samples of air, rainwater, and newly particle fallout will be collected routinely as indicated in Table 2.4-4.

Atmospheric tritium will be sampled at the Watts Bar Nuclear Plant. TVA has recently tested sampling methods and plans have been made to incorporate the sampling apparatus into both the local and one of the remote monitoring stations.

(3) Terrestrial monitoring - Samples of milk, vegetation, soil, private well water, and public water supplies will be collected within a 10-mile radius of the plant. Environmental gamma radiation levels will be measured utilizing thermoluminescent dosimeters on a 500-foot grid within the plant boundaries and at each air monitoring station.

Milk will be sampled from dairy farms near the plant on a monthly basis. Locally processed milk will also be sampled on a monthly basis. If an increase in the I-131 content is detected in other critical vectors such as vegetation, the frequency of milk sampling will be increased.

Consideration has been given to sampling animals such as cattle raised in the vicinity of the nuclear plant. Present plans are to sample vegetation on a monthly and quarterly basis. This vector would be the first indicator in the food chain to man through animal. If an increase above the natural background established during the preoperational monitoring program is detected the program will be expanded to include other vectors in the food chain such as

[illegible] will be sampled during [illegible] the [illegible] and brown [illegible] trout.

(4) Reservoir Sampling - Samples will be taken on quarterly basis [illegible] Watts Bar and Chickamauga reservoirs. These [illegible] are shown in Figure 2.4-[illegible] in Tennessee River miles [illegible], [illegible], 507.0, 506.6, and [illegible] at Swagerty [illegible] and 2.3; and at station X (approximate location TRM 502.0) which will be located 500 feet below the point of discharge of radioactive wastes, the location of which has not been determined. In addition, a [illegible] point station is located in the [illegible] at Watts Bar [illegible] upstream of the nuclear power [illegible]. Samples collected for radiological analyses include [illegible] from five cross sections and plankton from six. Bottom fauna will [illegible] sampled at six cross sections and bottom sediment from eight. Further sampling information is to be found in Tables 2.4-5 and 2.4-6 and figure 2.4-9. Locations of these cross sections conform to sediment ranges established and surveyed by TVA.

Cross section 490.5 is 41.5 miles downstream from the Watts Bar Nuclear Plant site and 10.7 miles upstream from the Sequoyah Nuclear Plant diffuser and was originally selected as a control station for the Sequoyah monitoring program. The stations established for the Sequoyah plant monitoring program extend downstream to TRM 445.5 (in Chickamauga Reservoir) and will supplement the Watts Bar monitoring program. The beginning date for the Watts Bar [illegible] will be the same as that for the Sequoyah program. However, the [illegible] program is to be initiated before the Watts Bar Nuclear Plant [illegible] and therefore both programs will be executed concurrently.

[illegible] samples of water, net plankton, sediment, benthic fauna, and three species of fish will be collected quarterly. Samples will include the two quarters of [illegible] and analyzed for radioactivity. Water, [illegible] activity will be determined in water (dissolved and suspended fractions), net plankton, sediment, [illegible] and liver of clams, flesh of two commercial species game fish species, and the whole body of one commercial fish species. Except in the Mississippi River, with respect to the channel catfish, Sr^{90} and Cs^{137} content will be determined on all species by appropriate radiochemical techniques. The activity of the gamma emitting radionuclides will be determined with a multichannel gamma spectrometer.

At present TVA feels that its planned sampling includes those vectors which will give the first indication of increased radioactivity levels in the environment. If radioactivity increases are seen in those vectors being sampled, consideration will then be given to expanding the sampling program to include other biological specimens. Consideration has been given to sampling waterfowl, however, about 95 percent of ducks hunted in southeast Tennessee are migratory, moving great distances in the winter and spring. It would be impossible to make an accurate

assessment of any radionuclides found in migratory waterfowl to a particular source such as Watts Bar Nuclear Plant. Therefore, it seems more logical to sample other vectors in the environment which the waterfowl might inhabit for short periods of time.

(a) Water - A total of 27 water samples will be collected for determination of suspended and dissolved radioactivity from the eight cross sections and the tailrace of Watts Bar Dam.

Effluent concentrations are determined prior to release of liquid radioactive waste from the plant. The liquid radwaste holdup tanks are sampled prior to release and the concentration of the contents determined. Knowing the dilution water discharge flow rate and the concentration of the liquid in the radwaste tank, a release rate from the tank will be established which will not exceed applicable standards in the discharge pipe prior to release to the unrestricted area. A set point will be established on a radiation monitor downstream of the tank discharge line which will cause automatic isolation if the concentration in the line exceeds the previously established value. In addition, a sequential type sampler will continuously sample the effluent and be analyzed periodically to ensure that all other systems are functioning properly. When considering these plant safeguards, the reservoir monitoring frequency is believed to be adequate.

Buildup of radioactivity in Chickamauga Reservoir is not expected; however, if it does occur it will occur slowly over a long period of time. The frequencies established in the present program will be satisfactory to detect this gradual effect. Possible leakages will be detected by the plant effluent monitoring system.

(b) Fish - Radiological monitoring of fish will be accomplished by the analysis of composite samples from collections at five sampling stations--TRM 532.1, 527.4, 506.6, 496.5, and HRM 2.4. One composite will consist of one pound of flesh from six white crappie, 8 inches or longer; one from the flesh of six smallmouth buffalo, 14 inches or longer; one from six whole smallmouth buffalo, 14 inches or longer; and one from the flesh of six channel catfish, 12 inches or longer. All samples will be collected quarterly and analyzed for gamma, gross alpha, and gross beta activity. Concentrations of Sr^{89} and Sr^{90} will be determined on the whole fish and flesh of a smallmouth buffalo only, which will be as nearly equal in size as available. The composite samples will contain approximately the same quantity of flesh from each of the fish. For each composite a subsample of material will be drawn for counting.

(c) Plankton - For radiological analyses, 13 net plankton samples will be collected at six stations by horizontal tows with a one-half meter, 100-150 micron mesh net. For analytical accuracy, at least 50 grams (wet weight) of material is desirable and collection of such amounts will probably be practical

only during the period April September because of seasonal variability in plankton abundance. Samples will be analyzed for gamma, gross alpha, and gross beta activity, and Sr^{89} and Sr^{90} content.

(d) Sediment - Sediment samples will be collected from dredge hauls made for bottom fauna. Gamma, gross alpha, and gross beta activity, and Sr^{89} and Sr^{90} content will be determined in 13 samples collected from points in eight cross sections. Each sample will be a composite obtained by combining equal volumes of sediment from at least three dredge hauls at a point in the cross section.

(e) Bottom fauna - Eleven samples of Asiatic clams will be collected with a Peterson or Ekman dredge from six stations and analyzed for gamma, gross alpha, and gross beta activity. The Sr^{89} and Sr^{90} content will be determined on the shells only. A 50-gram (wet weight) flesh sample should provide sufficient activity for counting.

(5) Domestic water supplies monitoring - Domestic water supplies, such as small surface streams and wells, will be sampled and analyzed. Well water will be obtained from at least four farms located within 5 miles of the plant, and from one at some greater distance to serve as a control for laboratory analysis. Public water supplies at Spring City, at the Watts Bar Reservation, at Dayton, and at the Savannah Valley Utility District will be analyzed monthly. Englewood public water supply, taken from Middle Creek, a tributary of the Hiwassee River, will be analyzed quarterly. Specific isotopic

analyses will be performed and averaged for each station for a 6-month period.

(6) Quality control - A quality control program will be established with the Tennessee Department of Public Health Radiological Laboratory and the Eastern Environmental Laboratory, Environmental Protection Agency, Montgomery, Alabama, to assure the accuracy of analytical methods. Samples of air, water, milk, vegetation, and soil collected around the plant are forwarded to these laboratories for analysis. Results are exchanged for comparison.

Table 2.4-2

ESTIMATES OF ANNUAL LIQUID WASTE QUANTITIES FROM TWO UNITS

Source	Volume (Gal/Yr) Recycle	Volume (Gal/Yr) Processed & Discharged or Shipped offsite
Equipment drains & leakoffs	140,000	
Laundry & shower		240,000
Hot lab equipment rinses		32,000
Equipment drains, leaks (nonrecycleable reactor grade and nonreactor grade)		39,000
Decontamination		16,000
Fuel cask decontamination		350,000
Reactor coolant discharged for Tritium control		45,000 (1)
TOTALS	140,000	722,000

(1) This is the estimated maximum quantity that must be removed annually to maintain a maximum tritium concentration of 2.5 μ C_i/ml.

Table 2.4-2

SUMMARY OF RADIOLOGICAL IMPACT ON ANNUAL BASIS[a,b]

	Normal Operation	Proposed 10 CFR 50 Appendix I Guides
A. Liquid Effluents		
Activity released	0.92 Ci	10 Ci
Average concentration before dilution in the Tennessee River	1.7 (-8)[c] μCi/cm³	2.0 (-8) μCi/cm³
Maximum human organ doses		
1. bone	2.9 (-2) mrem	5 mrem
2. G.I. tract	1.8 (-2) mrem	5 mrem
3. thyroid	5.5 (-2) mrem	5 mrem
4. skin	1.7 (-2) mrem	5 mrem
5. total body	1.7 (-2) mrem	5 mrem
Human population doses within the Tennessee Valley Region		
1. bone	7.3 man-rem	
2. G.I. tract	4.4 man-rem	
3. thyroid	12 man-rem	
4. skin	4.1 man-rem	
5. total body	4.1 man-rem	
Maximum dose to terrestrial vertebrates	1.1 mrad	
Maximum doses to aquatic organisms		
1. plants	.093 mrad	
2. invertebrates	130 mrad	
3. fish	0.25 mrad	

a. Table excludes tritium. Doses due to releases of tritium in liquid effluents are 1.7 x 10^{-3} mrem and 0.32 man-rem. Doses due to releases of tritium in gaseous effluents are 0.27 mrem and 0.81 man-rem.
b. Releases for two units operating at full power with 0.25 percent failed fuel.
c. 1.7 x 10^{-8}

Table 2.4-2 (continued)

	Normal Operation	Proposed 10 CFR 50 Appendix I Guides
B. Gaseous Effluents		
I-131 concentration at site boundary	3.8 (-15) $\frac{\mu Ci}{cc}$	1.0 (-15) $\frac{\mu Ci}{cc}$
Maximum individual doses		
1. inhalation at site boundary (thyroid)	1.3 (-1) mrem	5 mrem
2. consumption of milk from nearest dairy farm (thyroid)	3.3 mrem	5 mrem
3. external exposure at site boundary (F&Y)	6.6 mrem	10 mrem
Population doses within a 50-mile radius		
1. inhalation (thyroid)	1.1 (-1) man-rem	
2. consumption of milk (thyroid)	5.4 man-rem	
3. external exposure (F&Y)	1.3 (+1) man-rem	
C. Direct Gamma Radiation from Liquid Storage Tanks	5.0 (-2) mrem	
D. Maximum Annual Dose to[d] Any Individual	1.0 (+1) mrem	
E. Maximum Population Dose[d]	3.1 (+1) man-rem	

d. Thyroid. Assumes external exposure also contributes to thyroid dose.

Table 2.4-3

DOSES FROM NATURALLY-OCCURRING BACKGROUND RADIATION

Individual Doses (mrem)	
External[a]	125
Internal[b]	20
Total	145 mrem

Population Dose (man-rem)

0.145 rem x 1,000,000[c] people = 145,000 man-rem

a. Measured by TVA personnel
b. Principles of Radiation Protection. K. Z. Morgan and J. E. Turner, eds. New York: John Wiley and Sons, Inc., 1967, p. 10.
c. Estimated population within a 50-mile radius of the Watts Bar Nuclear Plant in the year 2000.

Table 2.4-4

AIR AND TERRESTRIAL MONITORING
SAMPLING AND ANALYSIS SCHEDULE

Type Sample	Frequency	Mode	Analysis: Gross Beta	Gamma[a] Scan	$Sr^{89,90}$	Total Alpha	^3H
Air Filter	Weekly	C[b]	x	x			
Charcoal Filter	Weekly	C[b]		x			
Rainwater	Monthly	Cp[c]	x	x	x		x
Heavy Particle Fallout	Monthly	Cp[c]	x				
Soil	Quarterly	Note[d]	x	x			
Vegetation	Quarterly	Note[e]	x	x	x	x	
Pasturage Grass	Monthly	Note[e]	x	x	x		
Milk	Monthly	G[f]		x	x		
River Water	Monthly	G[f]	x	x	x	x	x
Well Water	Monthly	G[f]	x	x			
Public Water	Monthly	G[f]	x	x			x
Food Crops	Twice each year	Note[e]	x	x	x		

a. The gamma scan will include specific analyses for 13 isotopes.
b. C - continuous collection
c. Cp - composite sample for period indicated
d. Soil is collected over a 2-square-foot area 1 inch in depth.
e. Vegetation and food crops are collected such that there is 3.5 liters of sample for analysis after necessary preparation.
f. G - grab sample at time of collection

Table 2.4-5

SAMPLING SCHEDULE FOR WATER, BAR AND TECKAMAHA RESERVOIRS

Station River and Mile	Horizontal Location[a]	Depths for Water Samples[b]	Depths for Zooplankton, Chlorophyll, and Phytoplankton Cell Counts[b]	Benthos[c]	Sediment[c]	Fish[d]
Tennessee 518.1	LM RM	S,M,B S,B	S,M S,M	1 1	1 1	1
Tennessee 527.4 (Walkers)	P	S				
Station X[e]	M	S,M,B				
Tennessee 527.4	LM RM RM	S,B S,B S,B	S,M	1 1	1 1	1
Tennessee 518.0	LM RM	S,B S,B	S,M	1 1	1 1	1
Tennessee 516.6	L R	S S,B	S,M	1	1	1
Hiwassee 24.3	C RM	S,B S,B				
Tennessee 514.5	L M	S S,B	S,M	1 1	1 1	1

a. Horizontal location looking downstream; C, and R (left, middle, and right) are approximate quarter points across the entire reservoir width; L, LM, RM, and RM represent approximately 1/8, 3/8, 5/8, and 7/8 of the distance across the reservoir.
b. Sample depth designations: S - surface (one meter depth); M - mid-depth; B - near the bottom.
c. Minimum number of dredge hauls.
d. 1 - gill net; T - trap net.
e. Station X will be located 500 feet below the point of discharge of radioactive wastes.

Table 2.4-6

RESERVOIR MONITORING RADIOLOGICAL ANALYSES

Type Sample	Analyses*
Fish	Gamma scan, gross alpha, gross beta, Sr^{89} and Sr^{90}**
Sediment	Gamma scan, gross alpha, gross beta, Sr^{89} and Sr^{90}
Water	Gamma scan, gross alpha, gross beta, Sr^{89}, Sr^{90}, and tritium
Plankton	Gamma scan, gross alpha, gross beta, Sr^{89} and Sr^{90}***
Benthos	Gamma scan, gross alpha, gross beta, Sr^{89} and Sr^{90} will be determined on shells only

All samples will be collected and analyzed on a quarterly frequency.

*The activity of 13 gamma emitting radionuclides will be determined with a multichannel gamma spectrometer. Sr^{89} and Sr^{90} will be determined by appropriate r[illegible]hemical techniques.

**Sr^{89} and Sr^{90} concentrations will be determined on the whole fish and flesh of smallmouth buffalo only, which will be composed of individuals as nearly equal in size as possible. The composite samples will contain an equal quantity (approximately) of flesh from each of the six fish of the species. From each composite a subsample of at least 50 to 100 grams (net weight) will be drawn for counting.

***Sr^{89} and Sr^{90} will be determined if there is adequate sample. At least 50 grams must be obtained for analytical accuracy. Samples will be collected twice annually during periods of greatest abundance.

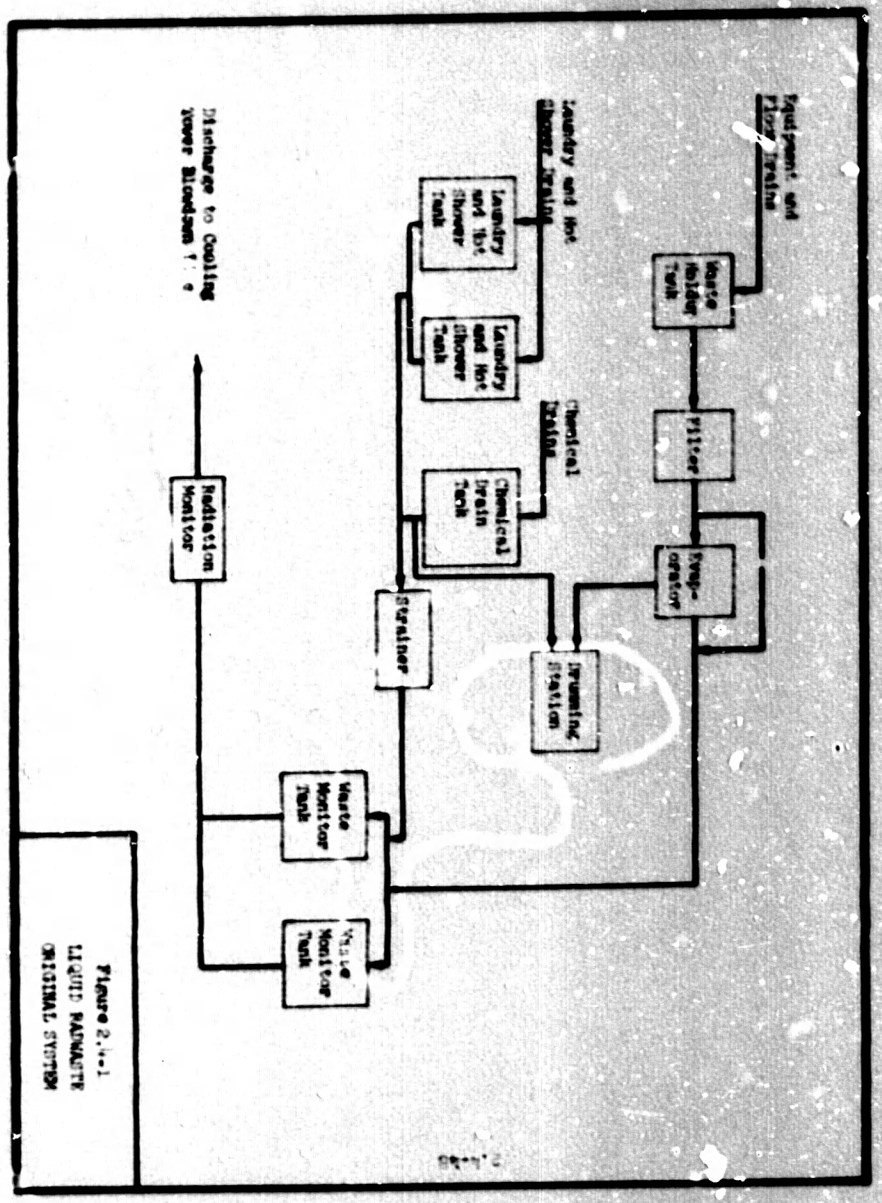

Figure 2.4-1
LIQUID RADWASTE
ORIGINAL SYSTEM

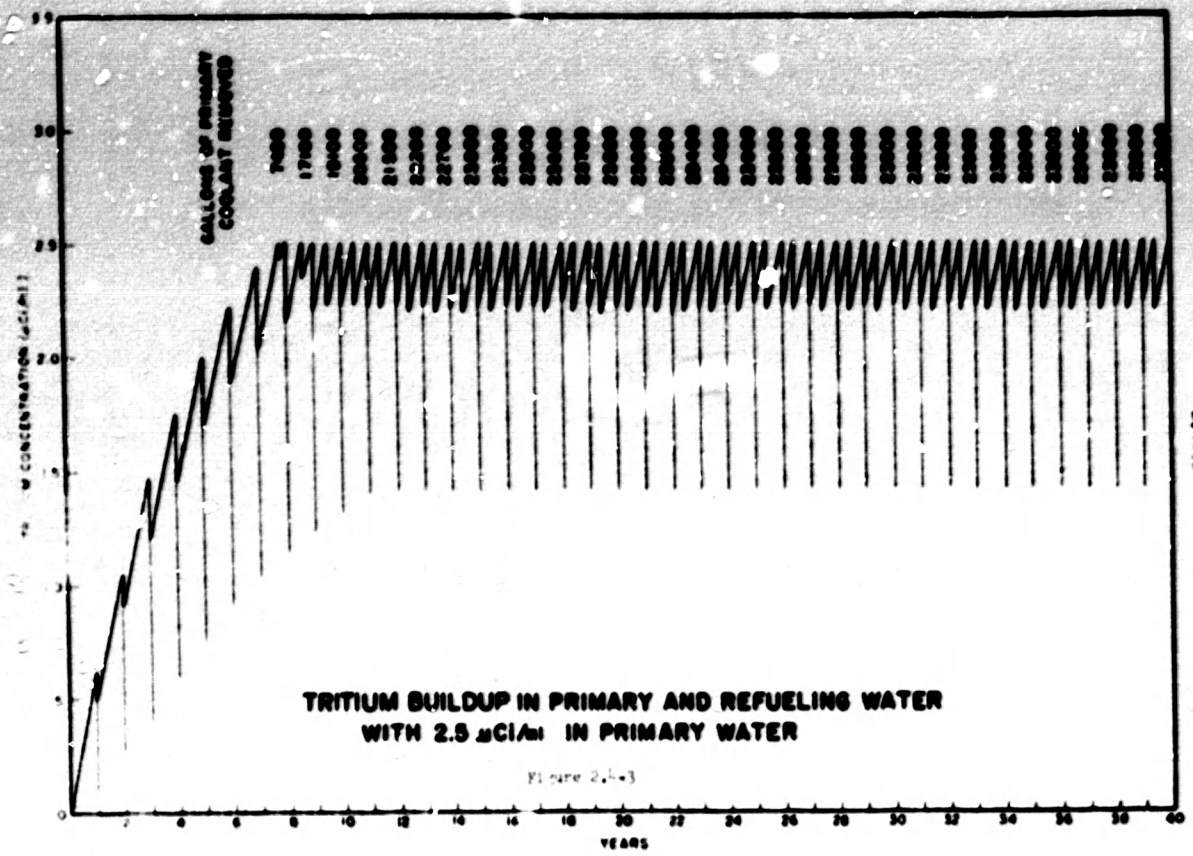

TRITIUM BUILDUP IN PRIMARY AND REFUELING WATER
WITH 2.5 μCi/ml IN PRIMARY WATER

Figure 2.4-3

2.4-30

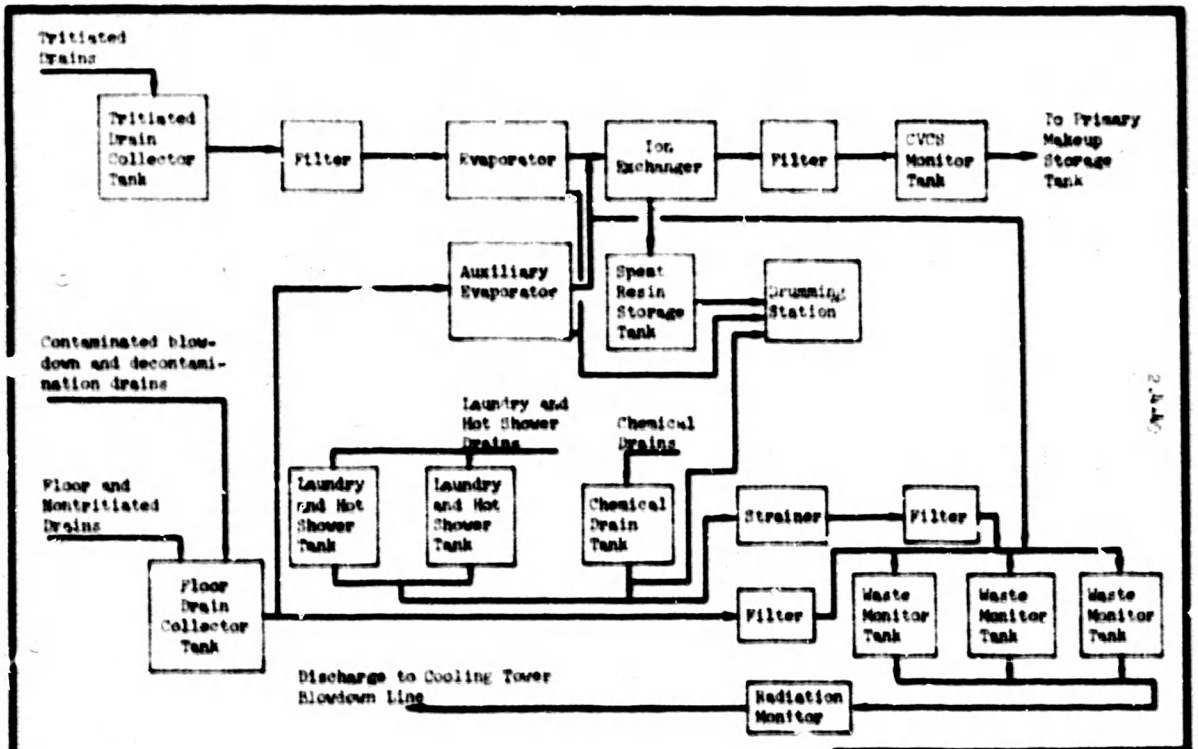

Figure 2.4-2
LIQUID RADWASTE - TRITIUM RECYCLE AND BLOWDOWN PROCESSING

2.4-29

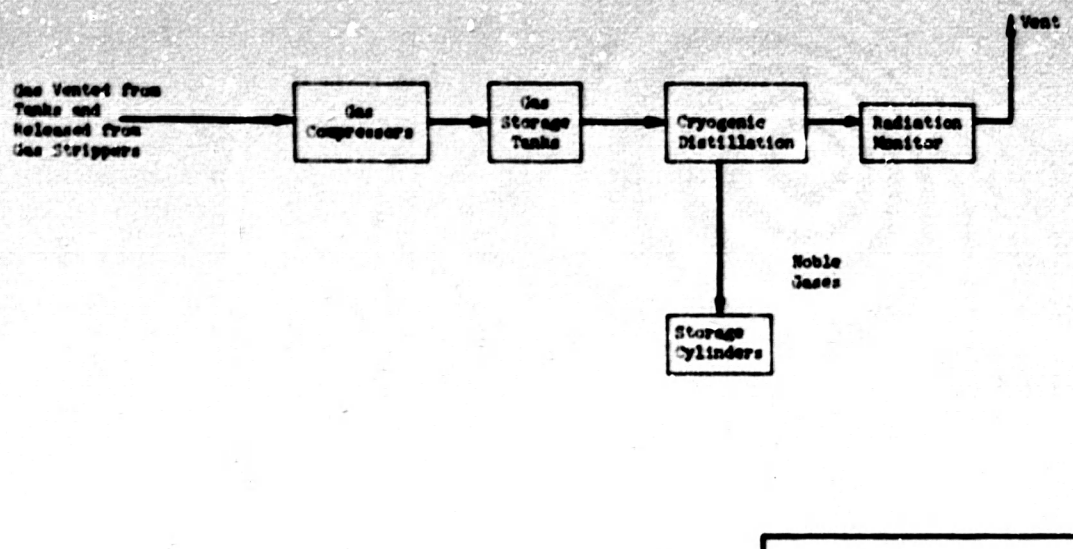

Figure 2.4-5
GASEOUS RADWASTE
ALTERNATIVE 2
ADDITION OF
CRYOGENIC DISTILLATION

2.4-52

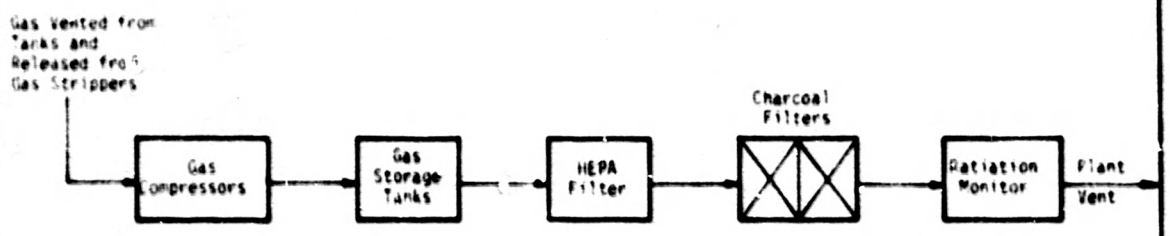

Figure 2.4-4
Gaseous Radwaste Original 45-day holdup (Six Storage Tanks)
Alternate 1, 60-day holdup (Nine Storage Tanks

2.4-51

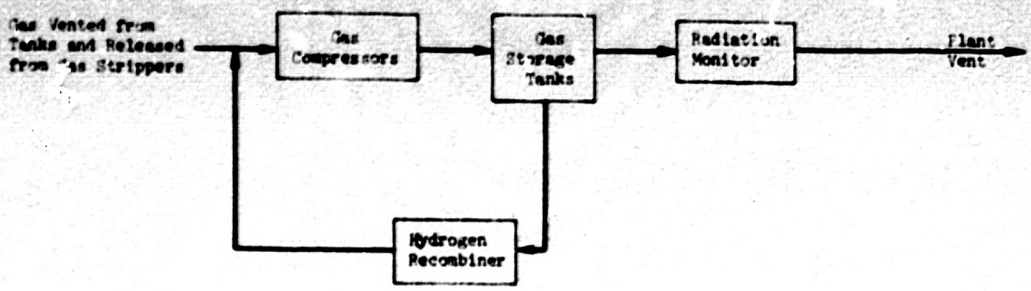

Figure 2.4-7
GASEOUS RADWASTE
ALTERNATIVE 4
ADDITION OF A
HYDROGEN RECOMBINER

2.4-54

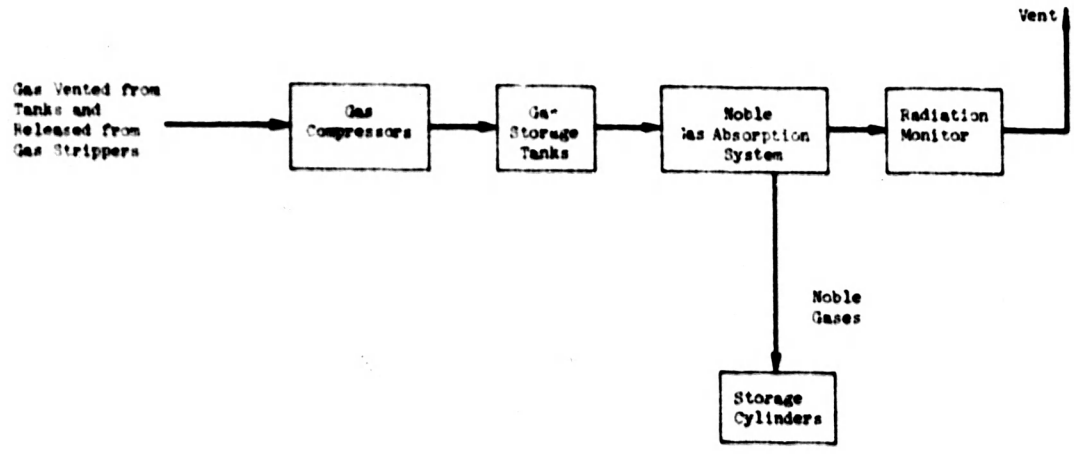

Figure 2.4-6
GASEOUS RADWASTE
ALTERNATE 3
NOBLE GAS ABSORPTION SYSTEM

2.4-53

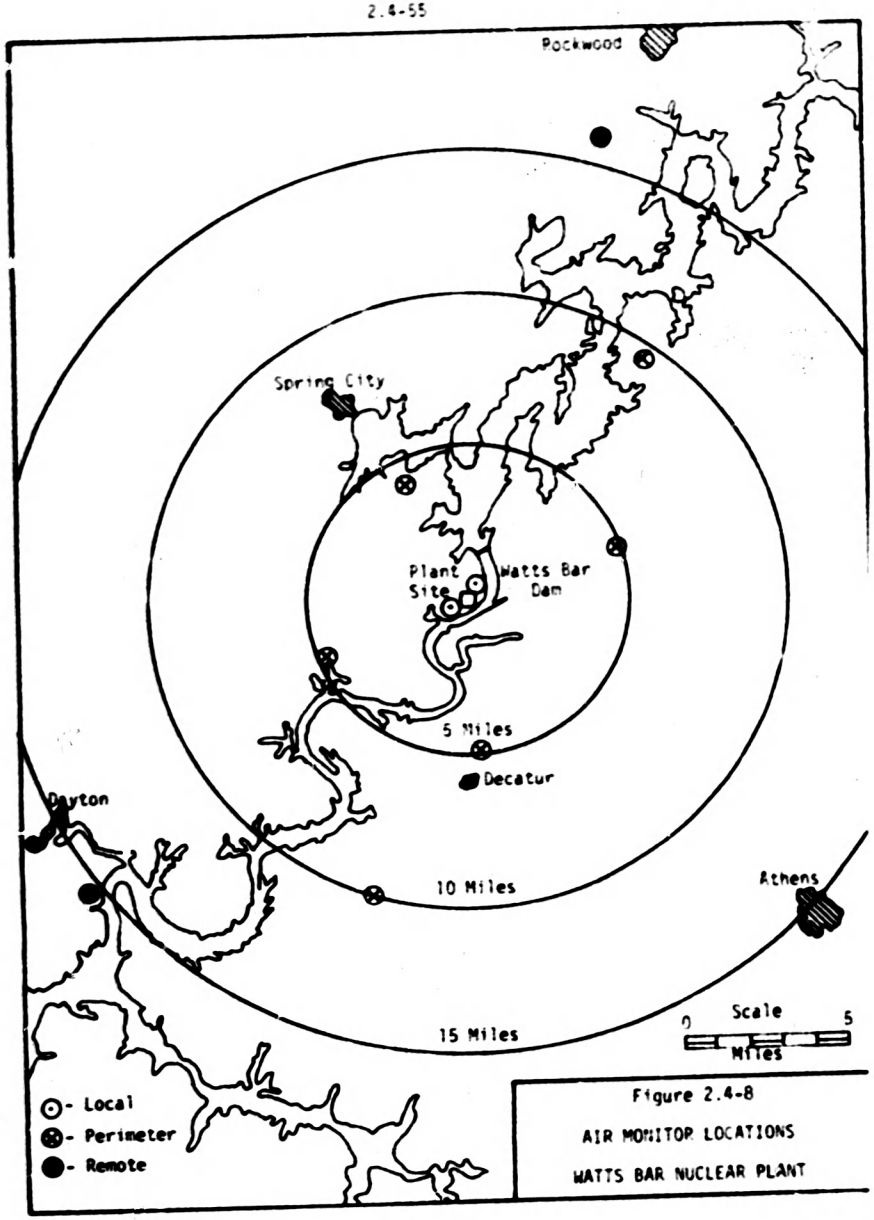

Figure 2.4-8

AIR MONITOR LOCATIONS

WATTS BAR NUCLEAR PLANT

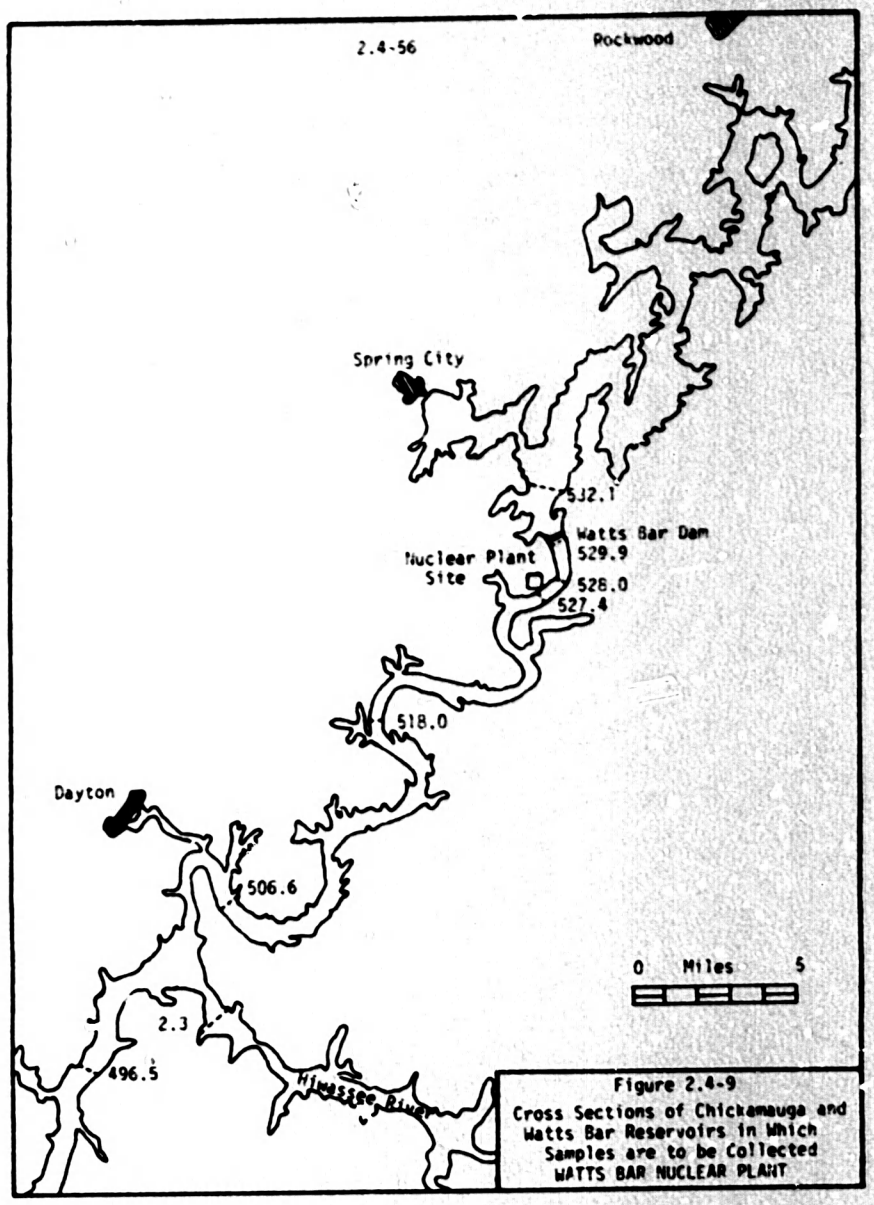

Figure 2.4-9

Cross Sections of Chickamauga and Watts Bar Reservoirs in Which Samples are to be Collected

WATTS BAR NUCLEAR PLANT

2.5 Nonradioactive Discharges - It is TVA's policy to keep the discharge of all wastes from its facilities at the lowest practicable level by using the best and highest degree of waste treatment available under existing technology, within reasonable economic limits.

A description of the potential sources and amounts of nonradioactive discharges which have been identified is given in this section, along with a description of the specific treatment of these potential sources.

1. Chemical discharges - TVA has altered the originally proposed design for handling plant effluents including the chemical discharges at the Watts Bar Nuclear Plant. These alterations in handling the plant chemical discharges are included in the present plant design for handling the plant effluents as shown schematically in figure 2.5-1. This section describes the modified design and discusses the control and treatment of chemical wastes and the probable environmental impact of chemical releases.

The sources of these chemicals and the maximum expected quantity of chemical end products that could be discharged are summarized in Table 2.5-1. The average and the maximum expected total chemical concentrations in the discharge pipe and in the reservoir after intial jet mixing are shown in Table 2.5-2. The tables were generated using conservative assumptions for chemical usage and solids concentrations in the cooling towers. These computations show that even under adverse conditions and using conservative assumptions, impacts to the environment due to chemical discharges from the Watts Bar Nuclear Plant will be very small.

(1) Cooling tower blowdown and drift - Operation of the two natural draft cooling towers for the condenser circulating water system will evaporate approximately 62 ft^3/s of the flow to the towers during periods of high evaporation. Drift will also be carried from the towers but is not expected to exceed about 0.1 ft^3/s per tower. To control the dissolved solids concentrations in the condenser cooling water, a certain amount of blowdown from the towers and makeup to the towers must be provided.

Normal blowdown rate will be approximately 62 ft^3/s during periods of high evaporation. This will maintain a condenser cooling system solids concentration about twice the reservoir solids concentration. Blowdown will be returned to the river through a diffuser system designed to provide the best diffusion possible with the streamflow available and minimize environmental impacts due to disturbances of aquatic life during construction and operation of the plant.

Chemical additives other than intermittent chlorination for biological control should not be required for cooling water concentration factors normally held to about 2. The water in Chickamauga Reservoir at the Watts Bar site normally shows a scaling rather than a corrosive nature and use of corrosion inhibitors is not necessary. No significant discharge of corrosion products is anticipated.

As described in Section 2.6, Heat Dissipation, cooling tower blowdown will be discontinued when the releases from the Watts Bar Dam are less than 3,500 ft^3/s. During normal

operation of Watts Bar Dam these periods seldom exceed 12 hours in duration on any given day. During a 12-hour period, dissolved solids concentrations in the cooling water circuit will normally rise to between three and four times their reservoir concentrations and, depending on fluctuations of dissolved solids concentrations in the river, will occasionally exceed four concentrations.

The major potential impact of discharging cooling tower blowdown could result from increasing trace metal concentrations above those existing in the reservoir. As shown in Section 2.6, Heat Dissipation, impacts associated with dissipating the relatively small quantity of heat in the cooling tower blowdown are insignificant even under the most adverse conditions anticipated, and Section 2.4, Radioactive Discharges, shows that doses due to radioactive discharges are less than those allowed by the proposed Appendix I to 10 CFR Part 50.

To assess the effect of concentrating within the cooling system the trace metals contained in the cooling system makeup water as withdrawn from the river, concentrations existing at the Fort Loudoun discharge were assumed to exist at Watts Bar and no credit was taken for dilution by the Little Tennessee and Clinch Rivers. In addition, calculations of metal concentrations in the cooling tower blowdown were made assuming that maximum observed trace metal concentrations in the reservoir occurred during a period when blowdown had been discontinued for about 12 hours.

Discontinuing blowdown for about 12 hours would result in increasing the concentration factor of the cooling system from 2 to 4. The resulting maximum trace metal concentrations that were calculated to occur in the cooling system, in the diffusers

as discharged, and in Chickamauga Reservoir after a dilution of 9:1 with reservoir flow when blowdown was resumed are included in Table 2.5-3. Also shown in the table are the applicable effluent and stream guidelines recognized by the Tennessee Water Quality Control Board.

Under these conditions, the effluent guidelines would be met for all identified parameters except selenium, cadmium, mercury, and possibly silver. At the edge of the jet mixing zone the stream guidelines would be met for all parameters except iron, zinc, manganese, cadmium, and possibly silver and arsenic. The maximum observed concentrations for iron, zinc, cadmium, manganese, and possibly silver and arsenic in the makeup water as it would have been withdrawn from the reservoir exceeded the stream guidelines. Since the minimum detectable concentration of the laboratory analytical procedures used for the silver and arsenic analyses exceeded the stream guidelines for these metals, effluent and stream concentrations cannot be reliably compared with the guidelines.

Although the stream guidelines might be exceeded for some parameters after initial jet mixing, these concentrations would not be expected to have a significant environmental impact. Additional mixing, which will occur in the reservoir as the water moves downstream, would further reduce the trace metal concentrations to levels approaching those occurring in the river at the time.

If the condenser cooling water system were operated normally at concentration factors of 5 and 6, concentration factors of 7 and 8 would result during periods when blowdown was discontinued. The discharge of cooling tower blowdown under these

conditions could result in high trace metal concentrations which may adversely affect the aquatic life.

Because of the relatively large variations in concentrations of solids in the condenser cooling water which will be experienced during periods of reservoir flow fluctuations, it is not deemed advisable to operate during normal blowdown periods with cooling water concentration factors much above 2. (See Section 2.6, Heat Dissipation.) These considerations will be closely observed during the early operation of the plant, and the best balance of cooling system concentration factors and heat dissipation will be adopted to minimize environmental impacts and operating costs.

During periods when blowdown is discontinued, the raw cooling waterflow in excess of that required to make up for evaporation will be diverted to the holding pool. This water will be stored in the pool until flow is restored from Watts Bar Hydro Plant and cooling tower blowdown is resumed, at which time a valved outlet from the holding pool will be used to discharge excess water stored in the holding pool through the blowdown discharge system until the holding pool is returned to its normal storage capacity. Concurrent with discharges from the holding pool, cooling tower blowdown may be increased to lower solids concentrations in the condenser cooling water back to the normal level of about twice the reservoir concentration.

The discharge flow rates from the holding pool and the cooling tower blowdown may be individually adjusted to take advantage of the holding pool discharge with its low solids concentrations and relatively low temperature for dilution of the blowdown stream.

Chlorination of the condenser circulating [illegible] Plant, where the chlorinated condenser circulating water discharges to a natural draft tower, indicated about 0.1 mg/l residual chlorine at the inlet to the tower and zero to a trace of chlorine in the tower basin during the injection period, when the chlorine residual was 0.7 [illegible] and 0.4 mg/l at the condenser outlet.

It is anticipated that the Watts Bar cooling water will [illegible] a similar chlorine demand and that only trace amounts of residual chlorine would be discharged in the cooling tower blowdown.

Cooling tower drift is not expected to exceed [illegible] This amount of drift would result in an average discharge of solids of less than 300 lb/d. The drift is expected to fall out in the immediate vicinity of the tower. No significant environmental impacts will occur since no area outside the immediate vicinity of the tower will receive significant concentrations of solids.

(2) Raw cooling water and essential raw cooling water systems - Acrolein, an unsaturated aldehyde, will be fed to both the raw cooling water and essential raw cooling water systems for the control of Asiatic clams. It is not expected that this [illegible] will be required more than [illegible] days per year. When required, it will be fed into the systems 1/2 hour each day to maintain a concentration within

the cooling systems of approximately 0.2 to 0.3 mg/l during feed periods. The two cooling system flows will be added as makeup water to the main condenser cooling system upstream of the condensers. Acrolein will not be used when the cooling tower blowdown is being withheld. Assuming the acrolein demand of the main condenser cooling water to be 0.1 mg/l in 1 hour,[1] the acrolein demand of the water within this system is sufficient to deplete all the residual acrolein contained in raw cooling and essential raw cooling systems. Laboratory tests[2] of water collected at the Watts Bar Steam Plant by an acrolein supplier indicate a demand of 0.15 mg/l in 15 minutes. Since acrolein is volatile, much of it would also be readily scrubbed from the cooling system water during its first pass over the cooling tower fill.

Taking no credit for acrolein demand or tower scrubbing and considering only dilution, the maximum concentration that would be expected in the main condenser system during periods when acrolein is simultaneously fed to both the raw and essential systems would be about 0.038 mg/l. Discharge through the diffusers of cooling tower blowdown having this concentration would result in an acrolein concentration in the river at the edge of the jet mixing zone of 0.0038 mg/l. The 96-hour TLM for fathead minnows is reported to be 0.06 mg/l.[1] The concentration in the river resulting from dilution alone (within the main condenser cooling system and by the diffusers) is about 6 percent of the 96-hour TLM.

Because of the acrolein demand of the main condenser cooling water and the acrolein scrubbing in the cooling

towers in addition to t[illegible] the use of acrolein will not have [illegible]

(3) [illegible] water filter plant - Operation [illegible] of lime, alum, [illegible] and chlorine. Residual chlorine in the treated water will be removed by the makeup water treatment demineralizers and will be released as combined chlorides in the demineralizer regenerant solutions. Filter backwash water and clarifier sludge will contain aluminum hydroxide floc and [illegible]. [illegible] will be diverted to a lagoon area which will contain two basins for use at alternate times. Each basin will be approximately [illegible] feet deep, 12 feet wide, and 130 feet long and will be located as shown on figure 1.1-2. The supernatant water from the lagoons will be decanted and returned to the cooling tower blowdown stream for discharge through the jet diffusers. As necessary, the sludge will be removed and disposed of by burial on the plant site or on other [illegible]. This method of sludge disposal results in minimal environmental impacts.

The addition of a coagulation aid may be necessary for proper operation of the filter plant. The coagulation aid which will be used in the event that it is necessary or advantageous will be chosen from those approved by the Environmental Protection Agency[3] and will be used in accordance with the manufacturer's recommendations.

(4) Water treatment plant demineralizer: - Normal procedure for treatment of demineralizer wastes is to hold the acid and caustic wastes in a tank, monitor pH, and adjust pH by addition of acid or caustic as required, and when pH is neutralized the waste

is discharged from the plant. At Watts Bar [illegible] regeneration waste will be passed through a weak cation-anion exchanger which will neutralize the waste. It will then be collected in a sump and after pH monitoring and any further pH adjustment required, will be pumped to the condenser circulating water cooling tower blowdown stream.

The weak cation-anion exchanger is charged initially with a weakly acidic cation resin which has a negligible salt splitting capacity. The neutral salts present do not consume ion exchange capacity but pass through the column unchanged.

Typical chemical reactions with the weakly acid cation exchanger are as follows:

Reactions with acid:

$$2RNa + H_2SO_4 \longrightarrow 2\,RH + Na_2SO_4$$

Reactions with alkali:

$$RH + NaOH \longrightarrow RNa + HOH$$

The unit is therefore self-regenerating as long as the process is in balance. Only backwashing is required. Backwash will be diverted to the filter plant backwash lagoon.

It is anticipated that the quality of raw cooling water to be treated for reactor makeup will be such that not over 231,000 pounds of 93 percent sulfuric acid and 431,000 pounds of 50 percent solution of sodium hydroxide will be expended annually if the demineralizers are operated at full capacity. After plant cleanup and startup makeup water requirements will be less than the rated capacity of the makeup water filter plant and demineralizers. Under these conditions the chemical usage and resulting waste product

chemical discharges will be reduced correspondingly. The contributions [illegible]

(5) Steam generator blowdown - Hydrazine, ammonia, and sodium phosphate will be used in treatment of the secondary system. Of these, only hydrazine will be fed continuously. Ammonia will be supplied as needed to maintain the desired pH in the steam generators. [illegible] phosphate will be fed to maintain a residual PO_4 concentration of 10 mg/l in the secondary system. In the steam generators, [illegible] to form ammonia which will be discharged as vapor through the condenser vacuum pumps. The steam generator blowdown containing both ammonia and sodium phosphate will be released to the cooling tower blowdown discharge stream. The estimated annual releases of ammonia, sodium, and phosphate from this source are shown in Table [illegible] and contribution to increases in the discharge are included in Table 2.5-2. The increased chemical concentrations in the plant effluent resulting from treatment of secondary system water will have no significant environmental impact.

The steam generator blowdown rate will normally be much less than 50 gal/min for two units. The blowdown will be discharged to the cooling tower blowdown except at times of a primary to secondary leak in the steam generator, at which time it is diverted to radioactive waste treatment. Steam generator blowdown will be interlocked with the cooling tower blowdown and will only be discharged from the plant during periods of cooling tower blowdown. The steam generator

blowdown will be stored during the times when it cannot be released from the plant. Storage capacity of 150,000 gallons is sufficient for approximately two days at a blowdown rate of 50 gal/min from the plant.

(6) Component cooling water system - Sodium chromate will be used as a corrosion inhibitor in the closed component cooling water system. When necessary for maintenance purposes, the chromate-containing water will be drained from portions of the closed system. Whenever possible, the water will be returned to the system. If not, it will be routed to the radwaste system and processed by evaporation. No chromate will be released to the river.

(7) Reactor coolant system - Boric acid, lithium hydroxide, and hydrazine will be used in the reactor coolant system. Hydrazine will be used only during startup. Letdown from this system will be processed as tritium-containing waste and recycled for reuse in the plant.

(8) Auxiliary steam generator blowdown - Two 40,000-pound-per-hour oil-fired steam generators will be supplied. One steam generator will operate continuously and one will operate during the heating season and intermittently during the remainder of the year. Hydrazine will be added continuously to the feedwater as a dissolved oxygen scavenger. The hydrazine concentration in the feedwater will be about 10-15 ug/l and within the system is expected to be at less than detectable concentrations. Ammonia will be intermittently added to the feedwater for pH control. Blowdown rate will vary from 2,000 to 4,400 gallons per day total for both steam generators and will result in an annual discharge of ammonia of only about 13 pounds. The blowdown, which

will have a residual ammonia concentration of about 0.2 mg/l, will be [illegible] blowdown line, [illegible] system. As shown in [illegible] the condensate in condenser water [illegible] blowdown stream [illegible] stabilizer.

(9) Chemical cleaning during construction - Chemical cleaning operations prior to unit startup will be conducted in such a way as to minimize releases to the reservoir and to ensure that any chemicals released have been neutralized and diluted to concentrations [illegible] levels. These procedures are described in Section [illegible], Construction Effects.

(10) Miscellaneous - Most equipment [illegible] decontamination operations will be performed with high-pressure water [illegible] with detergent solutions. These liquids will be treated in the radwaste system by filtration and will be released to the cooling tower blowdown discharge line.

Some decontamination operations will involve the use of chemicals such as sodium phosphate, sodium permanganate, ammonium citrate, alkaline potassium permanganate, and nitric, citric, oxalic, acetic, and hydrofluoric acids. Although the amounts of such chemicals have not been determined at this time, they will not be discharged to the reservoir but will be drained to the chemical tank in the radwaste system. The solutions will be neutralized and either drummed directly or processed by evaporation and the concentrates drummed.

Inputs to the chemical drain tank in the radwaste system consist of laboratory drains and decontamination wastes. The principal chemical reagents used in the laboratory include sodium

and ammonium hydroxides; hydrochloric, nitric, and sulfuric acids; ammonium acetate; and sodium carbonate.

Before the chemical drain tank is emptied, its contents are analyzed. If the liquid does not contain chemicals that would be harmful to the evaporator (principally, chlorides and sulfides) it will be processed in the auxiliary evaporator. The concentrates are drummed and the distillate is released to the reservoir in the usual manner. If the chemical drain tank contains chemicals that would be harmful to the evaporator, the contents are drummed without further processing. The contents of the tank are released to the reservoir only when analysis shows that no environmentally harmful concentrations of chemicals are present and the radioactivity level is within acceptable limits. It is expected that release would be an infrequent event.

Usage of detergents will be minimized for laundry and similar uses. Benefits gained by treatment of the small amount of detergent wastes are not great enough to justify radioactively contaminating a normally uncontaminated system such as the sewage treatment system. The detergent solutions will be filtered and discharged. Treatment and discharge of these detergent solutions in this manner are not anticipated to result in any significant environmental impacts.

It is anticipated that the cooling tower basins will be drained infrequently for maintenance purposes. When this operation is necessary, the contents of the tower basin will be routed to a settling area, and after a suitable settling period, the water will be discharged to the reservoir via the cooling tower blowdown line. Discharges will be regulated so that water quality standards are

not violated. Sludge removed from the tower basins will be tested [illegible]

high floor drains) drains into the storm drain system and thence to the holding pool. These drains will handle only innocuous materials and present no hazard to the environment.

The station sump also discharges to the holding pond and would not normally handle any substances potentially detrimental to the environment. It may occasionally contain some oil which has [illegible] machinery. Discharge into the holding pool via this route will be reclaimed for disposal as described below for the yard drainage system.

2. Yard drainage system - An area of approximately 30 acres [illegible] to provide a yard drainage holding pool. Any debris [illegible] may be settled and enter the yard drainage system will flow to this pool. A skimming type outflow will be provided so that floating debris and oil cannot escape from the pool. This material will be periodically removed from the pool for disposal. It will be disposed of in a manner to minimize environmental impact, dependent on the character of the wastes, such as burial, landfill, or burning. Oil will be reclaimed for reuse when practicable. If not suitable for reuse it will be drummed and held onsite for disposal by the most environmentally suitable method. Possible disposal methods include transporting the oil to one of TVA's conventional coal-fired plants and blending it with the fossil fuels used there.

3. Transformers and electrical machinery - Some oil leakage may occur from bearings and other parts of certain machinery inside buildings. The oil will be drained to an oil sump that will have adequate capacity to contain all spillage which will be drained for ultimate disposal.

In the event of an outside oil spill from the main stepup transformer or insulating oil storage tank, the oil spillage will be routed to the storm drains and then to the holding pool. At the holding pool the oil will be reclaimed for reuse or disposal.

Diesel fuel oil for auxiliary boilers and lube oil will be stored in tanks in an area which will be depressed below the surrounding ground to form a basin of sufficient capacity to retain the contents of the enclosed tanks. During periods of rainfall, some run-off water may accumulate in the basin. A valved low-level discharge pipe will be provided for periodic removal of precipitation collected within this area and be in contents will be inspected prior to discharge to assure that oil will not be released by this mechanism. The valve will be maintained in a closed position at all other times to provide for retention of oil should the tanks rupture.

In the interest of fire prevention for indoor installations, either Askarel-filled or dry-type transformers will be used. When the former is used, the transformer will be located within a concrete curb to prevent the possibility of spillage of this liquid, which contains polychlorinated biphenyls, from entering the common floor drainage system. A floor drain in the confined area will carry any spillage to a separate storage sump or else the curb will be made high

enough to hold the entire liquid content of the transformer. In either [illegible]

4. Sanitary wastes - Extended aeration sewage treatment facilities will be provided during the construction period to treat the domestic wastes from a peak construction force of approximately 2,[illegible] persons. Effluent from the plant will be chlorinated, [illegible] treatment facilities will be supplemented during construction by portable-type chemical toilets for use in isolated areas of the project site. At the end of construction, these initially installed facilities will be removed to storage, [illegible], or may be retained.

Secondary treatment facilities with provision for chlorination will be provided for the permanent plant. It is estimated that the permanent operation force will number 150 permanent employees. The treatment facility will be designed to handle approximately 300 persons including permanent and temporary employees and visitors. During periods when a large temporary maintenance force is working at the plant, the permanent waste treatment will be supplemented by portable-type chemical toilets.

Both construction and permanent systems will be operated to prevent untreated effluents from entering the river. The design will be in accordance with approved sanitation standards applicable to TVA facilities and will meet Tennessee Pollution Control Board requirements.

TVA routinely sends plans of its sanitary waste treatment facilities to the appropriate state pollution control organization for their information and files.

5. Gaseous emissions - Each oil-fired auxiliary steam generator is expected to operate at an average of about 75 percent capacity, which will result in both units burning a total of about 4.8×10^6 gallons per year of No. 2 fuel oil, having a maximum sulfur content of 0.5 percent.

The boilers are each rated at 40,000 lb/h steamflow with an input rating of about 55×10^6 Btu/h.

Emissions resulting from this operation were used to calculate the annual average ambient pollutant concentrations. For shorter averaging times (24 hours and less) both units were assumed to operate at full capacity, which results in burning 727 gallons/h of fuel.

The following emissions rates were used to calculate ambient pollutant concentrations:

Particulates	5.84 lb/h
Sulfur Oxides	5.74 lb/h
Carbon Monoxide	0.029 lb/h
Hydrocarbons	1.47 lb/h
Nitrogen Oxides	251.98 ton/yr

The emissions will be released through a stack which is approximately 127 feet above ground level.

Calculated maximum ambient pollutant concentrations resulting from these emissions, together with the applicable ambient standards, are given below.

Pollutant	Averaging Time	Calculated Concentrations	Secondary Ambient Standards
[illegible]	[illegible]	[illegible]	[illegible]
[illegible]	[illegible]	[illegible]	0.14 ppm
[illegible]	[illegible]	[illegible]	[illegible]
[illegible]	[illegible]	[illegible]	0.24 ppm
[illegible]	[illegible]	7.07×10^{-3} ppm	0.02 ppm

For this evaluation of the emissions from the auxiliary boilers, it can be seen that the emissions will have a negligible environmental impact.

6. Normal solid waste disposal - Normal solid waste disposal during plant operations will be accomplished by burying the waste [illegible] on the plant site or on other TVA grounds. This method of disposal [illegible] minimizes environmental impacts from solid waste.

Disposal of solid wastes during construction of the plant [illegible] and transmission facilities is discussed in Section 2.8, Construction Impacts, and Section 2.2, Environmental Aspects of Transmission [illegible], respectively.

Table 2.5-1 (cont.)

SUMMARY OF ADDED CHEMICALS AND RESULTING END PRODUCT CHEMICALS

Watts Bar Nuclear Plant

System	Chemical Added Source Chemical	Maximum[a] Annual Use lbs	Waste End Product Chemical	Maximum Resulting End Product[a] Annual lbs	Mean Daily lbs
Steam Generator Blowdown	Sodium Phosphate $Na_3PO_4 \cdot 12 H_2O$	8,7[illegible]	[illegible]	1,5[illegible] 2,1[illegible]	[illegible]
	Ammonia NH_3	66[illegible]	[illegible]	66	2[illegible]
	Hydrazine H_4N_2	4,300	[illegible]	[illegible]	[illegible]
Auxiliary Steam Generator Blowdown	Ammonia NH_3	3[illegible]	NH_3	[illegible]	[illegible]
	Hydrazine H_4N_2	10[f]	[illegible]	10	[illegible]
Raw Cooling Water System[h]	Acrolein $CH_2 = CHCHO$	20[illegible]	Acrolein	--	--
Essential Raw Cooling Water[i]	Acrolein $CH_2 = CHCHO$	2[illegible]1	Acrolein	--	--
Main Condenser Cooling System[j]	Chlorine	146,000	OCL^- and CL^-	146,000	[illegible]00

[a] Based on [illegible] operation [illegible] days/y at rated capacity.
[b] [illegible] material [illegible] will make up the water treatment sludge on a dry weight basis.
[c] [illegible] based on maximum suspended solids data observed at [illegible]
[d] [illegible] phosphate will be added to maintain 10 mg/l PO_4 within the [illegible].
[e] [illegible] will be added as needed to maintain pH of 9.0 in the system.
[f] [illegible] will be added as needed as a DO scavenger. Hydrazine is [illegible] to decompose [illegible]
[g] [illegible] will be released to the atmosphere through the air [illegible] outlet.
[h] Acrolein will be added to the system on 120 days for one-half hour each day. The acrolein dosed [illegible] water system and cooling tower stripping will prevent any acrolein from being discharged to the [illegible] effluent.
[i] Chlorine will be added to maintain 0.5 mg/l chlorine residual at condenser outlet for one-half [illegible]

Table 2.5-1

SUMMARY OF ADDED CHEMICALS AND RESULTING END PRODUCT CHEMICALS

Watts Bar Nuclear Plant

System	Chemical Added Source Chemical	Maximum[a] Annual Use lbs	Waste End Product Chemical	Maximum Resulting End Product[a] Annual lbs	Mean Daily lbs
Makeup Water Filter Plant	Alum $Al_2(SO_4)_3 \cdot 18 H_2O$	70,800	$Al(OH)_3$[b]	16,510	45
	Soda Ash Na_2CO_3	23,685	Na^+	10,300	28
			SO_4^{--}	30,600	84
			Settled Solids[b,c]	70,800	194
	Chlorine Cl_2	7,900	OCL^- and CL^-	7,900	22
Makeup Water Demineralizer	Sulfuric Acid H_2SO_4 (96%)	231,000	SO_4^{--}	217,000	595
	Sodium Hydroxide NaOH (50%)	431,000	Na^+	124,000	340
Natural Minerals Removed by Demineralizers					
	Sodium Na^+	10,120	Na^+	10,120	28
	Chloride Cl^-	19,700	Cl^-	19,700	54
	Sulfate SO_4^{--}	21,750	SO_4^{--}	21,750	60
	Total Dissolved Solids	117,500	Dissolved Solids	117,500	322

Table 2.5-3

SUMMARY OF OBSERVED TRACE METAL CONCENTRATIONS AND EXPECTED MAXIMUM TRACE METAL CONCENTRATIONS IN THE CONDENSER COOLING SYSTEM, DIFFUSER STORES, AND AT THE EDGE OF THE JET MIXING ZONE

Parameter Total	Observed Concentrations at TRM 602.3 January-December 1971 mg/l Max.	Min.	Mean	Maximum Expected Trace Metal Concentrations - mg/l[a] Condenser Cooling System CF = 4.0	Diffuser[b] Discharge Net CF = 3.0	At Edge of Jet Mixing Zone 9:1 Mixing	Tennessee Water Quality Control Board[d] Guidelines - mg/l Effluent	Stream
Iron	600	270	447	2,760	2,070	828	10,000	1,500 300[e]
Copper	10	<10	<10	40	30	12	1,000	80
Zinc	150	20	58	600	450	180	2,000	100
Barium	300	<100	<118	1,200	900	360	5,000	5,000 1,000[e]
Beryllium	<10	<10	<10	<40	<30	<12	f	f
Silver	<20	<10	<12.5	<80	<60	<24	50	5
Aluminum	130	<10	<38	520	390	156	250,000	1,000
Selenium	7	1	4	28	21	8	10	10
Arsenic	<30	<10	<25	<120	<90	<36	1,000	1,000 10[e]
Manganese	210	70	119.2	840	63	252	10,000	1,000 50[e]
Lead[g]	20	10	14	80	60	24	100	50

2.5-22

F-127

Table 2.5-2

SUMMARY OF CHEMICAL DISCHARGES

Watts Bar Nuclear Plant

Waste Product Chemical	Maximum[a] Annual Discharge of Product Chemical lbs	Operating[b] Under Normal (N) Increased Blowdown (I)	Waste[c] Product Chemical Contribution to Discharge Concentrations mg/l	Observed Concentrations in River At TRM 529.9 mg/l Average	Maximum	Concentrations[d] in Effluent N(CF) = 2 I(CF) = 3 mg/l Average	Maximum	Concentrations[e] in River at Edge of Jet Mixing Zone mg/l Average	Maximum	Maximum[f] Allowable Concentrations mg/l Effluent	River
Sulfates SO_4^{--}	269,350	N	2.204	16.6	27.9	35.404	58.004	18.48	30.91	1,400	250
		I	0.804	16.6	27.9	50.604	84.504	20.000	33.560		
Sodium Na^+	146,010	N	1.195	7.7	11.0	16.595	23.195	8.589	12.219	6	100
		I	0.436	7.7	11.0	23.536	33.436	9.284	13.284		
Chlorides Cl^{-h}	173,600	N	1.421	15.0	23.0	31.421	47.421	16.642	25.642	6	250
		I	0.518	15.0	23.0	45.518	69.518	18.092	27.692		
Ammonia NH_3	78	N	0.000638	0.087[i]	0.170[i]	0.1746	0.3406	0.096	0.187	6.1	0.6
		I	0.000833			0.2612	.5102	0.104	0.204		
Phosphate $PO_4^{\equiv}$	2,190	N	0.018	0.20[i]	0.29[i]	0.418	0.598	0.222	0.321	j	j
		I	0.007			0.667	0.877	0.241	0.349		
Dissolved Solids	657,148	N	5.378	89.8	127	184.978	259.378	99.32	140.24	6	500
		I	1.961			271.361	382.961	107.96	152.60		

a. Based on 24-hour operation, 365 days/yr at rated capacity of equipment and maximum chemical requirements.
b. N-Normal Operation. Blowdown = 66 ft3/s. I-Increased Blowdown after periods when blowdown was discontinued - 170 ft3/s (42 ft3/s normal blowdown, 43 ft3/s extra blowdown to reduce concentration factor and 60 ft3/s discharge from holding pond).
c. Equivalent concentration of added chemicals and products in blowdown.
d. Concentration factor of blowdown - 2 during periods of normal blowdown net concentration factor of blowdown = 3 during periods of increased blowdown (110 ft3/s at CF = 4, 50 ft3/s at CF = 1).
e. Based on jet diffuser designed to mix 9 volumes of river water with one volume of blowdown.
f. Tennessee Water Quality Control Board Guidelines.
g. No specific guideline identified.
h. Computation is for chloride since the chlorine dosage of the cooling water is such that no residual chlorine will be discharged.
i. Data observed at Fort Loudoun Dam tailrace TRM 602.3.
j. No effluent should contain more than 1.0 mg/l phosphates as P (3.2 mg/l as PO_4). The suggested stream limit is 0.01 mg/l as P (0.03 as PO_4) or background whichever is higher.

2.5-23

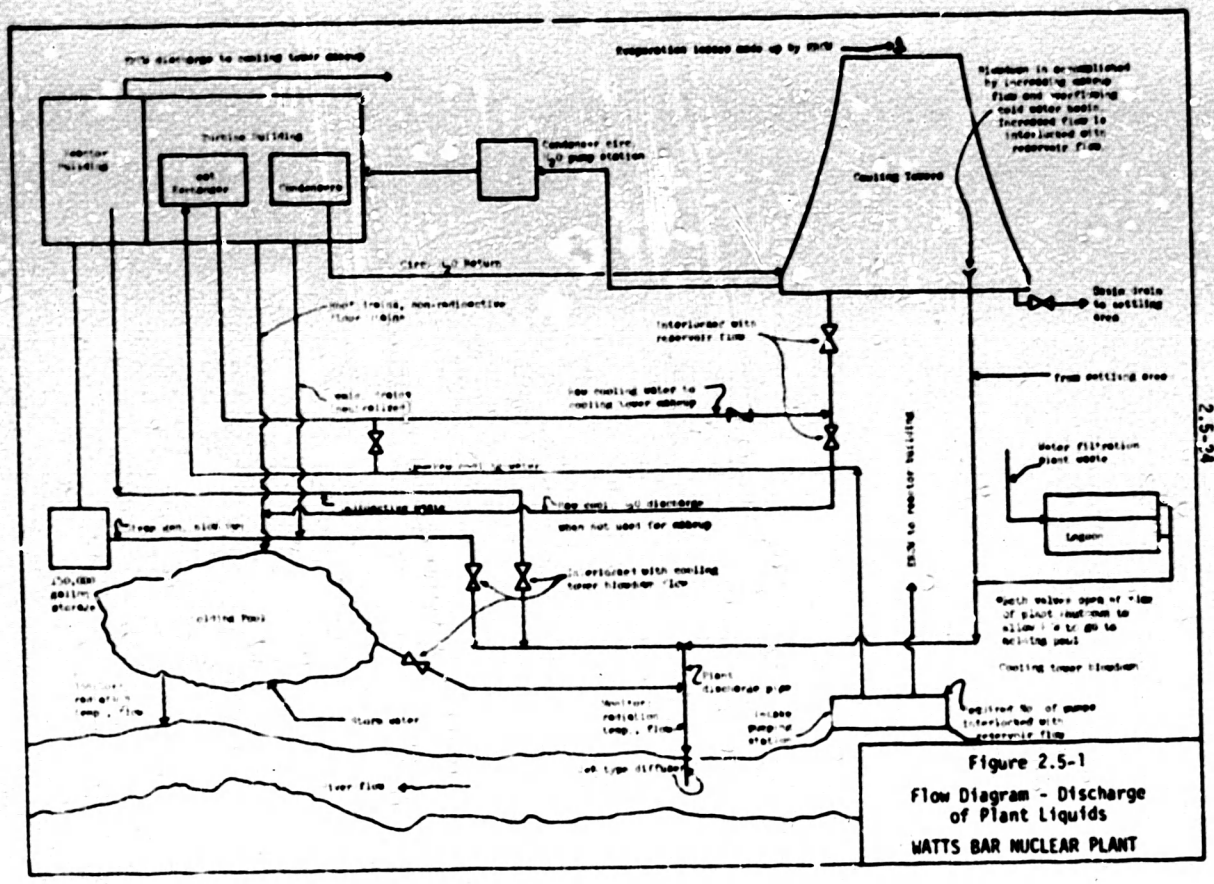

Figure 2.5-1

Flow Diagram - Discharge of Plant Liquids

WATTS BAR NUCLEAR PLANT

Table 2.5-3 (cont.)

SUMMARY OF OBSERVED TRACE METAL CONCENTRATIONS AND EXPECTED MAXIMUM TRACE METAL CONCENTRATIONS IN THE CONDENSER COOLING SYSTEM, DIFFUSER SYSTEM, AND AT THE EDGE OF THE JET MIXING ZONE

Parameter	Observed Concentrations at TRM 602.3 January-December 1971 µg/l			Maximum Expected Trace Metal Concentrations - µg/l[a]			Tennessee Water Quality Control Board[d] Guidelines - µg/l	
Total	Max	Min.	Mean	Condenser Cooling[a] System CF = 4.0	Diffuser[b] Discharge Net CF = 3.0	At Edge of[c] Jet Mixing Zone 9:1 Mixing	Effluent	Stream
Chromium[g]	<20	<5	<11	<60	<60	<24	3,000	50
Nickel[g]	<50	<50	<50	<200	<150	<60	3,000	100
Cadium[g]	30	<1	<9	120	90	36	10	10
Mercury[g]	4	<1	<1	16	12	4.8	5	5

a. Assumes maximum observed concentrations occur simultaneous with periods when blowdown has been discontinued for 12 hours and the concentration factor in the condenser cooling system has increased from two to four.
b. When blowdown is resumed after periods of no blowdown the diffuser discharge is assumed to be as follows: Regular blowdown of 62 ft^3/s, cf = 4; Increased blowdown to reduce concentration factor = 48 ft^3/s, cf = 4; and holding pond discharge = 60 ft^3/s, cf = 1; therefore net cf = 3 (blowdown and holding pond discharges are variable).
c. Based on jet diffuser designed to mix 9 volumes of river water with one volume of plant discharge.
d. Tennessee Water Quality Control Board Guidelines obtained by letter dated July 19, 1972.
e. Guideline for streams classified for domestic water supply.
f. No guideline established.
g. Observed data from TRM 645.1.