CHG. LET.	DESCRIPTION	DATE	BY	APP.	CHG. NO.
A	REMOVED CADIUM LINER CHANGE TUBE SPACING TO 12" CHANGE BRACE FOR FLOOR MOUNTING	3/10/60	A J F		147

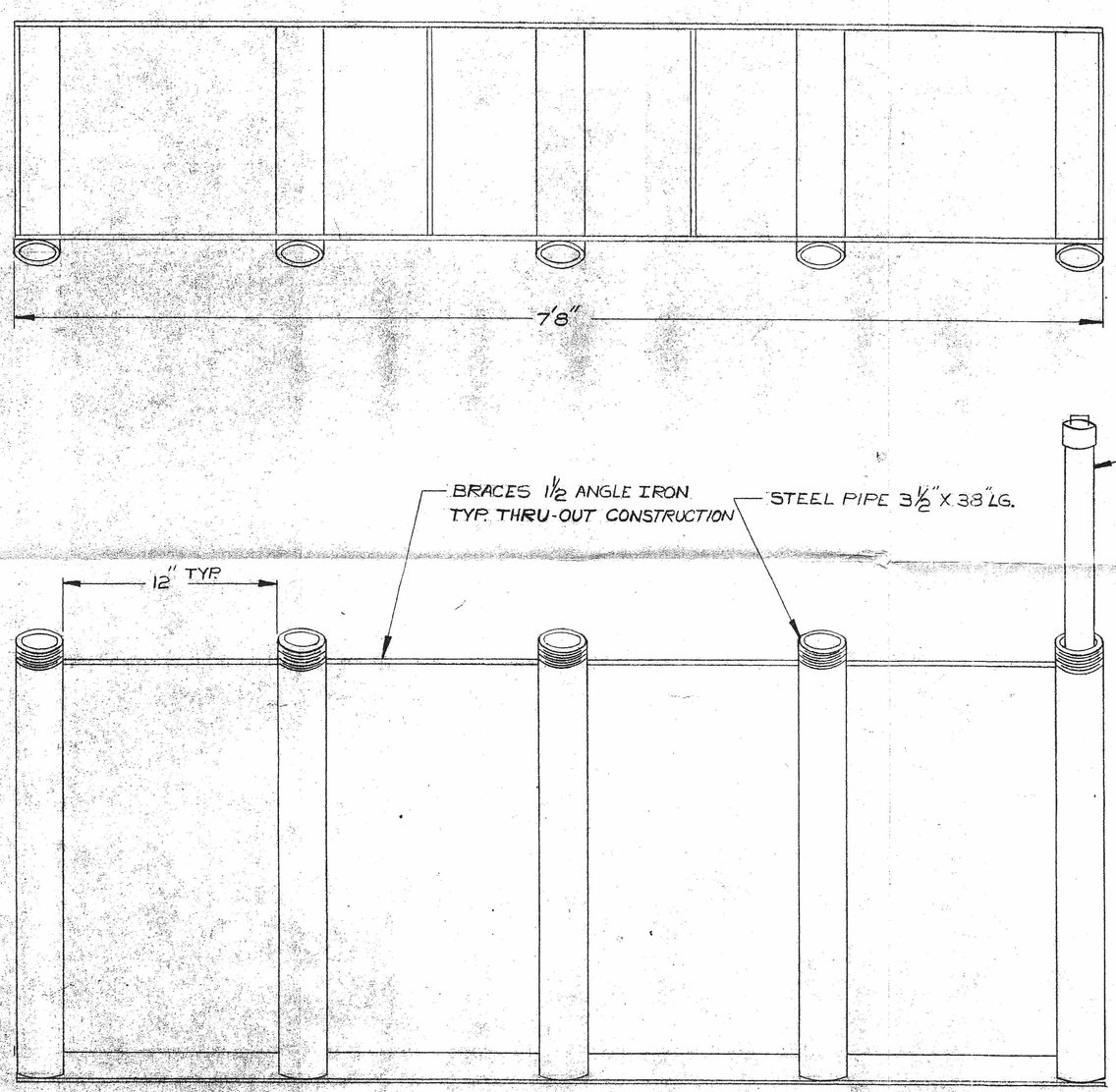

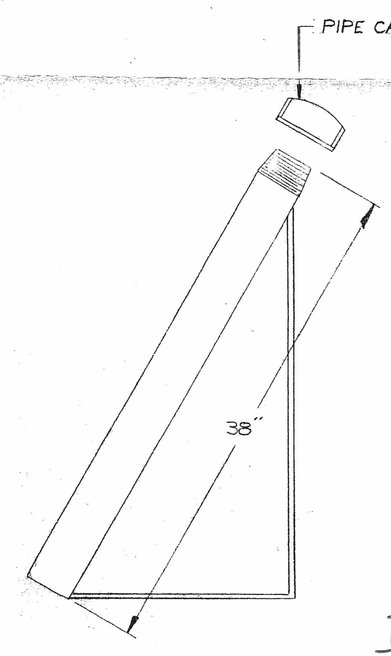

D-04

G-2	G-1	ITEM NO.	DRAWING NO.	DESCRIPTION	PROJECT NO.	USED ON ASS'Y
QUANTITY						

TOLERANCES UNLESS OTHERWISE SPECIFIED
DECIMAL ±.005
FRACTIONAL ±1/64"
ANGULAR ±½°
BREAK ALL SHARP EDGES
REMOVE ALL BURRS

APPROVED		DATE
DRAWN	[signature]	12-24-59
CHECKED		
APPROVED	N. Weiss	12-28-59

FINISH & SPECIFICATION
MATERIAL & SPECIFICATION

TITLE: STORAGE RACKS FOR FINISHED PINS

ENGELHARD INDUSTRIES, INC.
D. E. MAKEPEACE DIVISION
ATTLEBORO, MASS.

SCALE	SIZE	DRAWING NO.	REV.
NONE	C	50034	A

MODERN BLUE PRINT CO.