PMNorthAnna3COLPEmails Resource

From: Regina.Borsh@dom.com
Sent: Tuesday, October 21, 2008 3:38 PM
To: Thomas Kevern
Cc: Andrea Johnson; mark.tonnaci@nrc.gov; twilli2@entergy.com; hickste@earthlink.net; petersonn@dteenergy.com; david.distel@exeloncorp.com; joseph.bauer@exeloncorp.com; patricial.campbell@ge.com; charles.bagnal@ge.com; robertm.hall@ge.com; stephen.kimura@ge.com; Robert.J.Atkinson@dom.com; Spencer.Semmes@dom.com; Joseph.Hegner@dom.com; christopher.kerr@exeloncorp.com; John.Disosway@dom.com; aschneider@enercon.com; bchenault@enercon.com; tbarnet@entergy.com
Subject: DRAFT Handouts for 10/23: Proposal for Addressing GDC 17
Attachments: Draft ITAAC to Address GDC 17-rv4.pdf; GDC 17 Presentation - 10-23 DCWG Meeting-rv2.ppt

Hi Tom,

Attached are draft handouts for your staff's review prior to our discussion on Thursday at 2:00 pm. Also, when you send the phone information, I'll forward to the people that have been copied on this email, so they can call in if they aren't attending the meeting.

Please let me know if you have any questions.

Thanks,

Gina Borsh
Dominion
Office: (804) 273-2247
Cell: (804) 205-0797
Tie-Line Phone: 8-730-2247

CONFIDENTIALITY NOTICE: This electronic message contains information which may be legally confidential and/or privileged and does not in any case represent a firm ENERGY COMMODITY bid or offer relating thereto which binds the sender without an additional express written confirmation to that effect. The information is intended solely for the individual or entity named above and access by anyone else is unauthorized. If you are not the intended recipient, any disclosure, copying, distribution, or use of the contents of this information is prohibited and may be unlawful. If you have received this electronic transmission in error, please reply immediately to the sender that you have received the message in error, and delete it. Thank you.

Hearing Identifier: NorthAnna3_Public_EX
Email Number: 546

Mail Envelope Properties (OF48F23F8A.9F82986A-ON852574E9.006B6F1B-852574E9.006BD56D)

Subject: DRAFT Handouts for 10/23: Proposal for Addressing GDC 17
Sent Date: 10/21/2008 3:37:49 PM
Received Date: 10/21/2008 3:39:27 PM
From: Regina.Borsh@dom.com

Created By: Regina.Borsh@dom.com

Recipients:
"Andrea Johnson" <Andrea.Johnson@nrc.gov>
Tracking Status: None
"mark.tonnaci@nrc.gov" <mark.tonnaci@nrc.gov>
Tracking Status: None
"twilli2@entergy.com" <twilli2@entergy.com>
Tracking Status: None
"hickste@earthlink.net" <hickste@earthlink.net>
Tracking Status: None
"petersonn@dteenergy.com" <petersonn@dteenergy.com>
Tracking Status: None
"david.distel@exeloncorp.com" <david.distel@exeloncorp.com>
Tracking Status: None
"joseph.bauer@exeloncorp.com" <joseph.bauer@exeloncorp.com>
Tracking Status: None
"patricial.campbell@ge.com" <patricial.campbell@ge.com>
Tracking Status: None
"charles.bagnal@ge.com" <charles.bagnal@ge.com>
Tracking Status: None
"robertm.hall@ge.com" <robertm.hall@ge.com>
Tracking Status: None
"stephen.kimura@ge.com" <stephen.kimura@ge.com>
Tracking Status: None
"Robert.J.Atkinson@dom.com" <Robert.J.Atkinson@dom.com>
Tracking Status: None
"Spencer.Semmes@dom.com" <Spencer.Semmes@dom.com>
Tracking Status: None
"Joseph.Hegner@dom.com" <Joseph.Hegner@dom.com>
Tracking Status: None
"christopher.kerr@exeloncorp.com" <christopher.kerr@exeloncorp.com>
Tracking Status: None
"John.Disosway@dom.com" <John.Disosway@dom.com>
Tracking Status: None
"aschneider@enercon.com" <aschneider@enercon.com>
Tracking Status: None
"bchenault@enercon.com" <bchenault@enercon.com>
Tracking Status: None
"tbarnet@entergy.com" <tbarnet@entergy.com>
Tracking Status: None
"Thomas Kevern" <Thomas.Kevern@nrc.gov>
Tracking Status: None

Post Office: dom.com

Files	**Size**	**Date & Time**
MESSAGE	1198	10/21/2008 3:39:27 PM
Draft ITAAC to Address GDC 17-rv4.pdf	30953	
GDC 17 Presentation - 10-23 DCWG Meeting-rv2.ppt	200768	

Options

Priority:	Standard
Return Notification:	No
Reply Requested:	No
Sensitivity:	Normal
Expiration Date:	
Recipients Received:	

Draft Interface Requirements and ITAAC to Address GDC 17

New DCD Tier 1 ITAAC

Table 2.13.1-2
ITAAC for the Onsite AC Power System

Design Commitment	Inspections, Tests, and Analysis	Acceptance Criteria
9. The onsite AC electrical distribution system from the Generator Step Up Transformer (GSUT), unit auxiliary transformers (UATs) and reserve auxiliary transformers (RATs) to the safety-related loads is rated to supply necessary load requirements, including power, voltage, and frequency, during all design operating modes.	Analysis of the as-built safety-related and non-safety related load groups will be performed to determine their load requirements during all design operating modes. This analysis will, in part, specify required power, voltage, and frequency at the input to the UAT and RATs in order to provide adequate power, voltage, and frequency to the safety-related IPC buses to support safety-related load operation. Analyses will be performed to determine the as-built ratings of applicable onsite AC electrical distribution equipment to supply their loads during all design operating modes.	A report exists and concludes that the as-built onsite AC electrical distribution system from the GSUT, UATs and RATs to the safety-related loads is rated to supply the load requirements, including power, voltage, and frequency, during all design operating modes.
10. The onsite AC electrical distribution system is rated to interrupt analyzed fault currents, including the fault current contribution from the offsite power system.	Analysis of the as-built onsite AC electrical distribution system will be performed to determine the fault current interrupting requirements during all design operating modes including the fault current contribution from the offsite power system.	A report exists and concludes that the as-built onsite AC electrical distribution system is rated to interrupt analyzed fault currents, including the fault current contribution from the offsite power system.
11. The isolation breakers located on the high voltage side of the GSUT, UATs and RATs are supplied with redundant protection circuits, trip coils, and separate and independent DC control power sources.	Inspections and tests of the breaker protection circuits, trip coils, and DC control power for the as-built isolation breakers located on the high voltage side of the GSUT, UATs and RATs will be performed.	A report exists and concludes that the as-built isolation breakers located on the high voltage side of the GSUT, UATs and RATs are supplied with redundant protection circuits, trip coils, and separate and independent DC control power sources.

Draft Interface Requirements and ITAAC to Address GDC 17

DCD Interface Requirements for Offsite Power

4.2 OFFSITE POWER

Design Description

The offsite power system supplies power to the plant from the switchyard connected to the transmission grid offsite power sources and is the preferred source of AC power when the plant is operating and during plant shutdown when offsite power is available. The ESBWR standard design provides for two independent circuits: the normal preferred power source and the alternate preferred power source. The alternate preferred power source serves as backup to the normal preferred power source.

The offsite power system provides power to the safety-related system via the Isolation Power Centers under conditions when offsite power is available. The offsite power system is not required for the first 72-hours following an abnormal event or accident to protect fuel parameters. There are no Technical Specifications, required surveillances, or associated Limiting Conditions for Operation for the off-site power supplies.

Interface Requirement

A combined license applicant referencing the ESBWR certified design shall develop an ITAAC to verify that the as-built offsite power circuits from the transmission network to the input terminals of the UATs and RATs satisfy the applicable provisions of GDC 17. Specifically, the ITAAC shall verify:

1. Electric power from the transmission network to the onsite electric distribution system is supplied by two physically independent circuits.
2. Each offsite circuit is adequately rated to supply the load requirements during all design operating modes (refer to ITAAC 2.13.1-2, Item 9).
3. During steady state operation, the offsite power system is capable of supplying voltage at the input terminals of the UATs and RATs that will support operation of safety related loads during all design operating modes.
4. During steady state operation, the offsite power system is capable of supplying required frequency at the input terminals of the UATs and RATs that will support operation of safety related loads during all design operating modes.
5. The fault current contribution of the offsite power circuits is compatible with the interrupting capability of the onsite fault current interrupting devices.

Draft Interface Requirements and ITAAC to Address GDC 17

COLA ITAAC for Offsite Power to Address DCD Interface Requirements

Design Commitment	Inspections, Tests, and Analysis	Acceptance Criteria
1. Independent offsite power sources supply electric power from the transmission network to the onsite electric distribution system.		
a. A minimum of two offsite power circuits are provided and are physically separate.	a. Inspections of the as-built offsite power supply transmission system will be performed.	a. A report exists and concludes the following inspection results: i) At least two offsite transmission circuits exist. ii) The two offsite power circuits are physically separated by distance and/or a physical barrier so as to minimize to the extent practical the likelihood of their simultaneous failure under design basis conditions. iii) The two offsite power circuits do not have a common takeoff structure or use a common structure for support.
b. A minimum of two offsite power circuits are provided and are electrically independent.	b. Test of the as-built offsite power system will be conducted by providing a test signal in only one offsite power circuit at a time.	b. A report exists and concludes that a test signal exists in only the circuit under test.
c. The offsite transmission power, instrumentation, and control circuits are electrically independent.	c. Tests of the as-built offsite transmission power, instrumentation, and control system will be conducted by providing a test signal in only one offsite power circuit at a time.	c. A report exists and concludes that a test signal exists in only the circuit under test.

Draft Interface Requirements and ITAAC to Address GDC 17

Design Commitment	Inspections, Tests, and Analysis	Acceptance Criteria
2. At least two offsite power circuits are each adequately rated to supply necessary load requirements during all design operating modes.	Analyses of the offsite power system will be performed to evaluate the as-built ratings of each offsite power circuit against the load requirements determined in DCD ITAAC 2.13.1-2, Item 9.	A report exists and concludes that at least two offsite power circuits from the transmission network up to the input terminals of the unit auxiliary (UAT) and reserve auxiliary transformers (RAT) are each rated to supply the load requirements, during all design operating modes, of their respective safety related and nonsafety-related load groups.
3. During steady state operation, the offsite power system is capable of supplying required voltage to the input terminals of the UATs and RATs that will support operation of safety related loads during all design operating modes.	Analyses of the as-built offsite power system will be performed to evaluate the capability of each offsite power circuit to supply the voltage requirements at the inputs to the UATs and RATs determined in DCD ITAAC 2.13.1-2, Item 9.	A report exists and concludes that during steady state operation the as-built offsite power system is capable of supplying voltage at the input terminals of the UATs and RATs that will support operation of safety related loads during all design operating modes.
4. During steady state operation, the offsite power system is capable of supplying required frequency to the input terminals of the UATs and RATs that will support operation of safety related loads during all design operating modes.	Analyses of the as-built offsite power system will be performed to evaluate the capability of each offsite power circuit to supply the frequency requirements at the inputs to the UATs and RATs determined in DCD ITAAC 2.13.1-2, Item 9.	A report exists and concludes that as-built offsite power system during steady state operation is capable of supplying required frequency at the input terminals of the UATs and RATs that will support operation of safety related loads during all design operating modes.
5. The fault current contribution of the offsite power circuits is compatible with the interrupting capability of the onsite short circuit interrupting devices.	Analyses of the as-built offsite power system will be performed to evaluate the fault current contribution of each offsite power circuit at the inputs to the GSUT, UATs and RATs.	A report exists and concludes the short circuit contribution of the as-built offsite power circuits at the inputs to the GSUT, UATs and RATs is compatible with the interrupting capability of the onsite fault current interrupting devices as determined in DCD ITAAC 2.13.1-2, Item 10.

Interface Requirements and ITAAC to Address GDC 17

ESBWR DCWG – NRC Meeting

October 23, 2008

Objectives

- Present ESBWR DCWG's position on compliance with GDC 17
- Propose interface requirements and ITAAC to address GDC 17 requirements
- Address applicable NRC RAIs currently open for the ESBWR DCD, and NAPS and GG COLAs
- Obtain NRC concurrence with proposed approach

Background

- NRC issued RAIs to GEH and COL Applicants requesting interface requirements and ITAAC, respectively, to demonstrate capacity and capability of offsite power system based on GDC 17 requirements
- Discussions held with NRC to discuss applicability of GDC 17.
- ESBWR DCWG committed to discuss issue after last NRC-DCWG meeting, and finalize position.

Compliance with GDC 17

- Offsite power systems for ESBWR design will comply with GDC 17

Applicable RAIs

- ESBWR DCD RAI 14.3-394 S1
- NAPS RAI 8.2-28 (also related to NAPS 8.2-27 regarding supplied voltage and NAPS 8.2-15 regarding supplied frequency)
- GGNS RAI 8.2-1 (also related to GGNS 8.2-4 regarding supplied voltage and GGNS 8.2-6 regarding supplied frequency)

Approach

- Review the ABWR strawman ITAAC in RG 1.206 and determine applicability to ESBWR
- Develop ITAAC for onsite (DCD scope) portion of the AC distribution system
- Develop interface requirements for the offsite power system
- Develop site-specific ITAAC for offsite power system to address the interface requirements

Review of RG 1.206 Strawman ITAAC for ABWR Offsite Power

- RG 1.206 Table C.III.7.3 provides seven interface requirements and associated ITAAC
- Six of the seven interface requirements/ITAAC are considered applicable to the ESBWR
  - Redundancy and independence
  - Adequate size
  - Adequate voltage
  - Adequate frequency
  - Interrupting capability
  - Independence of I&C power

Review of RG 1.206 Strawman ITAAC for ABWR Offsite Power (continued)

- Seventh RG 1.206 interface requirement/ITAAC is not applicable:
  - I&C system loads shall be compatible with the capacity and capability design requirements of DC systems within the GEH design scope
  - I&C power for ESBWR offsite power control is not supplied from the onsite DC system

Onsite/Offsite Interface Point
DCD Figure 8.1-1

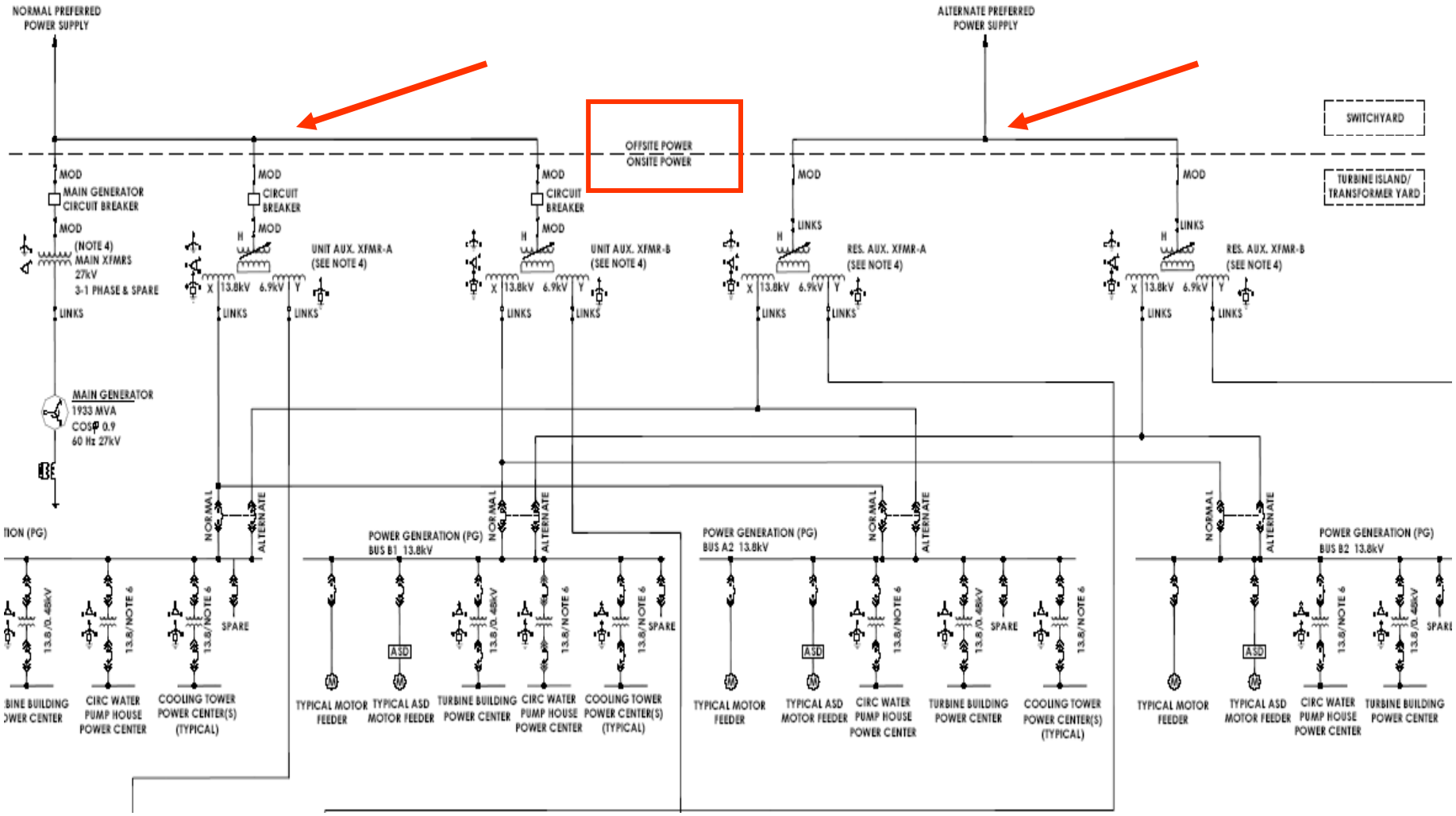

Proposed Interface Requirements and ITAAC

- See handout
  - Three new DCD Tier 1 ITAAC
  - Five interface requirements (one requirement incorporates two of the RG 1.206 interface requirements)
  - Five site-specific ITAAC (one requirement incorporates two of the RG 1.206 ITAAC)

Conclusion

- Proposed interface requirements and ITAAC:
  - Adequately address GDC 17
  - Incorporate applicable guidance from RG 1.206
  - Appropriately divide ITAAC between DCD scope and COLA scope equipment
  - RAI responses, DCD, and COLAs will reflect compliance with GDC 17

Questions ?