MITSUBISHI HEAVY INDUSTRIES, LTD.
16-5, KONAN 2-CHOME, MINATO-KU
TOKYO, JAPAN

October 28, 2008

Document Control Desk
U.S. Nuclear Regulatory Commission
Washington, DC 20555-0001

Attention: Mr. Jeffrey A. Ciocco,

Docket No. 52-021
MHI Ref: UAP-HF-08239

Subject: Transmittal of Correction Pages for US-APWR Design Control Document Revision 1

Reference: 1) Letter MHI Ref: UAP-HF-08153 from Y. Ogata (MHI) to U.S. NRC, "Submittal of US-APWR Design Control Document Revision 1 in Support of Mitsubishi Heavy Industries, Ltd.'s Application for Design Certification of the US-APWR Standard Plant Design" dated on August 29, 2008.

On August 29, 2008 (Reference 1), Mitsubishi Heavy Industries, Ltd. ("MHI") submitted to the U.S. Nuclear Regulatory Commission ("NRC") Revision 1 of the Design Control Document for the US-APWR ("DCD Rev. 1"). A DCD Change List was also provided with Reference 1 which identified by page and section where changes had been made in the DCD and provided a brief description of those changes. Revision bars were also provided in the DCD Rev. 1 to identify the locations where changes had been made.

In its review of the DCD Rev. 1, the NRC noted some discrepancies in the identification of changes to the DCD in that all changes made in DCD Rev.1 had not been addressed in the DCD Change List or identified by the Revision Bars. To resolve any such discrepancies, MHI has performed a comprehensive cross-check between the DCD Rev. 0 and Rev. 1. This comprehensive cross-check indicated that errors had occurred in identifying the changes to the DCD Rev. 1, and when corrected, should facilitate a more expeditious review by the NRC. The following discrepancies are being addressed:

1) No revision bars were provided for some of the changes
2) Sentences were unintentionally deleted from the text, and should be restored as originally stated Rev. 0.

With this letter, MHI transmits to the NRC Staff the Correction Pages to replace the corresponding pages of DCD Rev. 1. The replaced pages are provided in Enclosure 1 to this letter.

Please contact Dr. C. Keith Paulson, Senior Technical Manager, Mitsubishi Nuclear Energy Systems, Inc. if the NRC has questions concerning any aspect of this letter. His contact information is provided below.

D081
NRO

Sincerely,

Y. Ogata

Yoshiki Ogata,
General Manager- APWR Promoting Department
Mitsubishi Heavy Industries, LTD.

Enclosure:

1. Correction Pages for US-APWR Design Control Document Revision 1

CC: J. A. Ciocco
C. K. Paulson

Contact Information
C. Keith Paulson, Senior Technical Manager
Mitsubishi Nuclear Energy Systems, Inc.
300 Oxford Drive, Suite 301
Monroeville, PA 15146
E-mail: ckpaulson@mnes-us.com
Telephone: (412) 373-6466

Enclosure 1

UAP-HF-08239
Docket No. 52-021

Correction Pages

for

US-APWR Design Control Document Revision 1

October 2008

General description

On August 29, 2008 (Reference 1), Mitsubishi Heavy Industries, Ltd. ("MHI") submitted to the U.S. Nuclear Regulatory Commission ("NRC") Revision 1 of the Design Control Document for the US-APWR ("DCD Rev. 1"). A DCD Change List was also provided with Reference 1 which identified by page and section where changes had been made in the DCD and provided a brief description of those changes. Revision bars were also provided in the DCD Rev. 1 to identify the locations where changes had been made.

In its review of the DCD Rev. 1, the NRC noted some discrepancies in the identification of changes to the DCD in that all changes made in DCD Rev.1 had not been addressed in the DCD Change List or identified by the Revision Bars. To resolve any such discrepancies, MHI has performed a comprehensive cross-check between the DCD Rev. 0 and Rev. 1. This comprehensive cross-check indicated that errors had occurred in identifying the changes to the DCD Rev. 1, and when corrected, should facilitate a more expeditious review by the NRC. The following discrepancies are being addressed:

1) No revision bars were provided for some of the changes
2) Sentences were unintentionally deleted from the text, and should be restored as originally stated in Rev. 0.

This enclosure provides the corrected pages to replace the corresponding pages in the DCD Rev. 1, and the Change List which identify the reason for correction. These revisions are separated into the two categories mentioned above: "No Revision Bar" (see Table 1) or "Unintentionally Deleted" (see Table 2).

Reference

[1] Letter MHI Ref: UAP-HF-08153 from Y. Ogata (MHI) to U.S. NRC, "Submittal of US-APWR Design Control Document Revision 1 in Support of Mitsubishi Heavy Industries, Ltd.'s Application for Design Certification of the US-APWR Standard Plant Design" dated on August 29, 2008.

Table 3.2-2 Classification of Mechanical and Fluid Systems, Components, and Equipment (Sheet 42 of 53)

System and Components	Equipment Class	Location	Quality Group	10 CFR 50 Appendix B (Reference 3.2-8)	Codes and Standards(3)	Seismic Category	Notes
Containment low volume purge exhaust filtration units	5	R/B	N/A	N/A	5	NS	
Containment low volume purge exhaust filtration unit fans	5	R/B	N/A	N/A	5	NS	
Containment low volume purge exhaust filtration unit high-efficiency particulate air filters	5	R/B	N/A	N/A	5	NS	
Containment low volume purge exhaust filtration unit charcoal adsorbers	5	R/B	N/A	N/A	5	NS	
Containment penetration piping	2	PCCV R/B	B	YES	2	I	
Ductwork	5	PCCV R/B A/B	N/A	N/A	5	NS	
Containment isolation valves	2	PCCV R/B	B	YES	2	I	
Dampers	5	PCCV R/B A/B	N/A	N/A	5	NS	
32. Containment Fan Cooler System							
Containment fan cooler unit fans	5	PCCV	N/A	N/A	5	NS	
Containment fan cooler unit	5	PCCV	N/A	N/A	5	II	
Containment fan cooler unit cooling coils	2	PCCV	B	YES	5	I	
Ductwork	5	PCCV	N/A	N/A	5	NS	
Dampers	5	PCCV	N/A	N/A	5	NS	
33. Control Rod Drive Mechanism Cooling System							
Control rod drive mechanism cooling unit fans	2	PCCV	B	YES	5	I	

Table 3.2-2 Classification of Mechanical and Fluid Systems, Components, and Equipment (Sheet 48 of 53)

System and Components	Equipment Class	Location	Quality Group	10 CFR 50 Appendix B (Reference 3.2-8)	Codes and Standards(3)	Seismic Category	Notes
Dampers	5	R/B	N/A	N/A	5	NS	
Ductwork	5	R/B	N/A	N/A	5	NS	
42. Auxiliary Building Heating, Ventilation, and Air Conditioning System							
Auxiliary building air handling units	5	A/B	N/A	N/A	5	NS	
Auxiliary building air handling unit fans	5	A/B	N/A	N/A	5	NS	
Auxiliary building air handling unit cooling coils	4	A/B	D	N/A	5	NS	
Auxiliary building air handling unit heating coils	4	A/B	D	N/A	5	NS	
Auxiliary building exhaust fans	5	A/B	N/A	N/A	5	NS	
Penetration and Safeguard Component area isolation dampers and ductwork between Penetration and Safeguard Component area isolation damper	2	R/B	B	YES	5	I	
Exhaust line isolation dampers	2	R/B	B	YES	5	I	
Dampers	5	R/B PS/B A/B AC/B	N/A	N/A	5	NS	
Ductwork	5	R/B PS/B A/B AC/B	N/A	N/A	5	NS	
43. Non-Class 1E Electrical Room HVAC System							
Non-Class 1E electrical room air handling units	5	A/B	N/A	N/A	5	NS	
Non-Class 1E electrical room air handling unit fans	5	A/B	N/A	N/A	5	NS	

volumetrically examinable and detailed stress analyses are performed to demonstrate compliance with the limits of Subsection 3.6.2.1.1.2.

(6) 100% volumetric examination in accordance with IWA-2400 of ASME Code, Section XI (Reference 3.6-11) of all piping welds is performed.

(7) Anchors or five way restraints do not prevent the access required to conduct inservice examination specified in ASME Code, Section XI (Reference 3.6-11). ISI completed during each inspection interval provides examination of circumferential and longitudinal welds within the boundary of this portion of piping.

Application to Main Steam Pipe Room

No breaks are postulated in the main steam supply system (MSS) and feedwater system (FWS) piping from the PCCV penetration outboard weld to the wall of main steam pipe room (Figure 3.6-1) provided the following actions are taken:

- The pipe is routed straight to lower the stresses.
- Five–way restraint (free only in axial direction) is installed in the main steam pipe room wall penetration.
- Essential equipment is protected from the environmental, flooding, and subcompartment pressurization effects of an assumed non-mechanistic longitudinal break. Each assumed non-mechanistic break has a cross sectional area of one square foot and postulated to occur at a location that has the greatest effect on essential equipment.

3.6.2.1.1.2 Postulation of Pipe Breaks in Areas Other than PCCV Penetrations

The locations for postulated breaks in high-energy piping are dependent on the classification, quality group, and design standards used for the piping system. The break locations for high-energy piping are described in the following sections. These locations are postulated based on "as-designed" analyses using the design configuration. As a result of piping reanalysis, due to differences between the design configuration and the as-built configuration, the high stress and usage factor location may be shifted. The intermediate break (if any) locations need not be changed unless one of the following conditions exists:

a. The dynamic effects from the new (as-built) intermediate break locations are not mitigated by the original pipe whip restraint and jet shields.

b. There is significant change in pipe design parameters such as pipe size, wall thickness, or pressure rating.

ASME Code, Section III, Division 1 – Class 1 Piping

Pipe breaks are postulated to occur at the following locations in piping and branch runs designed and constructed to the requirements for Class 1 piping in the ASME Code, Section III (Reference 3.6-12).

- At terminal ends of the piping, including the following:

3.6.2.1.3 Types of Break/Cracks Postulated

3.6.2.1.3.1 Circumferential Pipe Breaks

Circumferential breaks are postulated in high-energy fluid system piping and branch runs exceeding a nominal pipe size of 1 inch at locations identified by the criteria in Subsection 3.6.2.1.1.2

No breaks are postulated in piping having a nominal diameter less than 1 inch, including instrument lines that are designed in accordance with RG 1.11 (Reference 3.6-13).

If the maximum stress range exceeds the limits specified in Subsection 3.6.2.1.1.2 and the circumferential stress range is greater than 1.5 times the axial stress range, no circumferential break is postulated; only a longitudinal break (Subsection 3.6.2.1.3.2) is postulated.

Following a circumferential break, the two ends of the broken pipe are assumed to move clear of each other unless physically limited by piping restraints, structural members, or pipe stiffness. The effective cross sectional (inside diameter) flow area of the pipe is used in the jet discharge evaluation. Pipe whipping is assumed to occur in the plane defined by the piping geometry and configuration and to initiate pipe movement in the direction of the jet reaction.

3.6.2.1.3.2 Longitudinal Pipe Breaks

Longitudinal breaks are postulated in high-energy fluid system piping and branch runs in nominal pipe sizes 4 inches and larger. Longitudinal breaks are postulated in high- energy fluid system piping at locations of circumferential breaks as described in Subsection 3.6.2.1.3.1

If the maximum stress range exceeds the limits specified in Subsection 3.6.2.1.1.2 and the axial stress range is greater than 1.5 times the circumferential stress range, no longitudinal break is postulated, only a circumferential break (Subsection 3.6.2.1.3.1) is postulated.

Longitudinal breaks in the form of axial split without pipe severance are postulated in the center of the piping at two diametrically opposed points (but not concurrently) located so that the reaction force is perpendicular to the plane of piping configuration and produces out-of-plane bending. Alternatively, a single split is assumed at the section of highest tensile stress as determined by detailed stress analysis (e.g., finite element analysis).

For longitudinal breaks, the dynamic force of the fluid jet discharge is based on a circular or elliptical (2D x 1/2D) break area equal to the effective cross-sectional flow area of the pipe at the break location and on a calculated fluid pressure modified by an analytically or experimentally determined thrust coefficient as determined for a circumferential break at the same location, where D is the effective inner diameter of the pipe. Line restrictions, flow limiters, positive pump-controlled flow, and the absence of energy reservoirs may be taken into account, as applicable, in the reduction of jet discharge.

4-98 code (Reference 3.7-9). This is accomplished through site-specific SSI analysis as explained below.

3.7.2.4.1 Requirements for Site-Specific SSI Analysis of US-APWR Standard Plant

The COL Applicant referencing the US-APWR standard design is required to perform a site-specific SSI analysis for the R/B-PCCV-containment internal structure utilizing the program ACS-SASSI SSI Version 2.2 (Reference 3.7-17) which contains time history input incoherence function capability. The SSI analysis using SASSI is required in order to confirm that site-specific effects are enveloped by the standard design. After the SASSI analysis is first performed for a specific unit, subsequent COLAs for other units may be able to forego SASSI analyses if the FIRS and GMRS derived for those subsequent units are much smaller than the US-APWR standard plant CSDRS, and if the subsequent unit can also provide justification through comparison of site-specific geological and seismological characteristics.

SSI effects are also considered by the COL Applicant in site-specific seismic design of any seismic category I and II structures that are not included in the US-APWR standard plant. Consideration of structure-to-structure interaction is discussed in Subsection 3.7.2.8. The site-specific SSI analysis is performed for buildings and structures including, but not limited to, to the following:

- Seismic category I ESWPT
- Seismic category I PSFSV
- Seismic category I UHSRS

The site-specific seismic response analysis of R/B-PCCV building structure addresses factors that affect the response of the combined soil-structure dynamic system that include, but are not limited to, the following:

- Properties and layering of the soil, including fill concrete and backfill modeled depending on its horizontal extent
- Depth of the water table
- Basemat embedment
- Flexibility of the basemat
- Presence of nearby structures

Up-to-date modeling techniques capable of capturing the various site-specific SSI effects are used for the analysis. The computer program SASSI is used for the site-specific SSI analysis, because it is based on the use of the FE technique and sub-structuring method with frequency-dependent impedance functions to model the interaction of the embedded flexible basemat with the surrounding soil.

The input used for the site-specific analysis must be derived from geotechnical and seismological investigations of the site. The input control motion that is derived from the site-specific GMRS, is applied in the SASSI analysis as within motion at the bottom of the basemat. Site-specific SSI analyses account for the uncertainties and variations of

be greater than 1/3 of the site-specific SSE for the design of site-specific seismic category I structures, then load combinations involving the site-specific OBE must have a minimum factor of safety of 1.5 against overturning and sliding.

The US-APWR standard plant design is based on the assumption, as discussed in Chapter 2, that there is no potential for liquefaction of the supporting media. In order to verify the dynamic stability of US-APWR standard plant and site-specific seismic category I structures, site-specific investigations are performed of the supporting media as described in Subsection 2.5.4.8 to verify that there is no potential for liquefaction. The site-specific factor of safety against liquefaction is determined to confirm the dynamic stability of seismic category I structures for the US-APWR standard design with respect to liquefaction.

3.7.2.15 Analysis Procedure for Damping

The analysis procedure of damping in the various elements of the soil-structure system model has been discussed in Subsections 3.7.1.2, 3.7.2.3, and 3.7.2.4.

3.7.3 Seismic Subsystem Analysis

This section addresses seismic analysis of civil structure-related seismic category I subsystems, which are analyzed in accordance with NUREG-0800, SRP 3.7.3 (Reference 3.7-35). The civil structure-related subsystems are accounted for in the global seismic models of the seismic category I building structures described in Subsection 3.7.2.3 by considering the mass and mass distribution of the subsystems in the models. However, seismic analysis of the subsystems has generally been performed separately because the subsystems do not contribute to the building stiffness and because the seismic responses of the buildings (ISRS as discussed in Subsection 3.7.2.5) serve as the seismic design input motion for the subsystems. SSCs that are seismically analyzed as civil structure-related subsystems include:

- Structures such as miscellaneous steel platforms, stairs, and walkways.
- Structures such as reinforced masonry block walls and enclosures.
- HVAC ducts and duct supports. The design of HVAC ducts and duct supports is addressed further in Appendix 3A.
- Conduits and conduit supports. The design of conduits and conduit supports is addressed further in Appendix 3F.
- Cable trays and tray supports. The seismic qualification of cable trays and tray supports is addressed in Appendix 3G.
- Pipe racks and pipe support framing. These structures may also be analyzed as part of mechanical piping subsystems as discussed in Section 3.12.
- Pipe whip restraints. See Section 3.6 and Appendix 3B for a discussion of the design of pipe whip restraints for dynamic loads due to pipe rupture and Appendix 3E for discussion of high energy piping design.
- Equipment cabinet structural framing and/or mounting.

In addition to the above, civil structure-related subsystems also include those seismic category I and II SSCs such as direct buried piping, conduit tunnels, dams, dikes,

amplitude[3]. The number of earthquake motion cycles used is based on IEEE Std 344-2004, Appendix D (Reference 3.9-34) guidance. This guidance requires the equivalent fatigue damage of two full SSE events with 10 high-stress cycles per event, therefore, 20 high-stress cycles. One SSE cycle is equivalent to 15 cycles at 1/3 SSE amplitude in accordance with Reference 3.9-34; therefore, 20 full SSE cycles are equivalent to 300 cycles at 1/3 SSE amplitude.

Tables 3.9-3 and 3.9-4 provide required loads and load combinations associated with ASME Code, Section III (Reference 3.9-1), Class 1, 2, 3 and Class CS systems, components and supports.

Due to the low probability of occurrence of a SSE during operational modes occurring less than 10% of the plant's operation time, the SSE is analyzed in combination only with those operating modes that occur greater than 10 percent of the time.

The SSE is, therefore, considered combined under the following PCs:

- Normal plant full (100%) power conditions and normal plant operating temperatures are considered for material properties and are used in combination with SSE.
- It is assumed that a simultaneous Loss of Offsite Power and a single failure of a safety-related system occur as a result of an SSE event. In addition, it is assumed that non safety-related systems are unavailable.
- For concurrent events, the timing sequence and initiating conditions that occur between the SSE and occasional transients such as valve discharge are considered combined when the SSE is the initiator of the transient condition. The SSE duration is considered as 22 seconds. Non-seismic structures and components are assumed to be functionally and structurally unavailable at the beginning of the SSE. A single failure assumption is considered for a single active component.
- An evaluation of non safety-related systems is performed to assure that their failure in an earthquake does not impact or jeopardize plant safe shutdown or required post accident monitoring.
- The fire protection lines that could affect safe-shutdown equipment or required post accident equipment through rupture and/or flooding during or following a seismic event are required to be seismically qualified.

---

[3] OBE as used in Table 1 of SRP 3.9.3, Appendix A and in ASME Code, Section III for stress evaluation subject to fatigue is 1/3 SSE with SSE damping. The earthquake inertial and anchor movement loads used in the Level B stress intensity range and alternating stress calculation is taken as 1/3 of the peak SSE inertial and anchor movement loads. In this case, the number of cycles to be (continued on next page) (continued from previous page) considered for earthquake loading is 300 as derived in accordance with Appendix D of IEEE Standard 344-2004 (Reference 3.9-34). In certain cases for non-standard SSCs, the 1/3 SSE may be adjusted higher for site-specific design as permitted by SECY 93-087 (Reference 3.9-17).

3.9-52 Quality Group Classifications and Standards for Water-, Steam-, and Radioactive-Waste-Containing Components of Nuclear Power Plants. Regulatory Guide 1.26, Rev.4, U.S. Nuclear Regulatory Commission, Washington, DC, March 2007.

3.9-53 Guidance on Developing Acceptable Inservice Testing Program, GL 89-04, U.S. Nuclear Regulatory Commission, Washington, DC, April, 1989.

3.9-54 Periodic Verification of Design Basis Capability of Safety-Related Motor-Operated Valves, GL 96-05, U.S. Nuclear Regulatory Commission, Washington, DC, September, 1996.

3.9-55 Safety-Related Motor-Operated Valves, Testing and Surveillance, GL 89-10, U.S. Nuclear Regulatory Commission, Washington, DC, June 1989.

3.9-56 Primary Reactor Containment Leakage Testing for Water-Cooled Power Reactors, Domestic Licensing of Production and Utilization Facilities, Energy. Title 10, Code of Federal Regulations, Part 50, Appendix J, U.S. Nuclear Regulatory Commission, Washington, DC.

3.9-57 Summary of Design Transient, Mitsubishi Heavy Industries, January 2009.

3.9-58 Summary of Seismic and Accident Load Conditions for Primary Components and Piping Design, Mitsubishi Heavy Industries, January 2009.

3.9-59 Summary of Stress Analysis Results for Components and Piping, Mitsubishi Heavy Industries, March 2009.

Table 3.9-14 Valve Inservice Test Requirements (Sheet 78 of 138)

Valve Tag Number	Description	Valve Type	Safety-Related Missions	Safety Functions(2)	ASME IST Category	Inservice Testing Type and Frequency	IST Notes
NCS-MOV-145B	Containment spray/residual heat exchanger component cooling water isolation	Remote	Maintain Close Transfer Open Transfer Close	Active Remote Position	B	Remote Position Indication, Exercise/2 Years Exercise Full Stroke/ Quarterly Operability Test	
NCS-MOV-145C	Containment spray/residual heat exchanger component cooling water isolation	Remote	Maintain Close Transfer Open Transfer Close	Active Remote Position	B	Remote Position Indication, Exercise/2 Years Exercise Full Stroke/ Quarterly Operability Test	
NCS-MOV-145D	Containment spray/residual heat exchanger component cooling water isolation	Remote	Maintain Close Transfer Open Transfer Close	Active Remote Position	B	Remote Position Indication, Exercise/2 Years Exercise Full Stroke/ Quarterly Operability Test	
NCS-MOV-316A	Charger Pump component cooling water return	Remote	Maintain Open	Remote Position	B	Remote Position Indication, Exercise/2 Years Exercise Full Stroke/ Quarterly Operability Test	

Table 3.9-14 Valve Inservice Test Requirements (Sheet 79 of 138)

Valve Tag Number	Description	Valve Type	Safety-Related Missions	Safety Functions(2)	ASME IST Category	Inservice Testing Type and Frequency	IST Notes
NCS-MOV-316B	Charger Pump component cooling water return	Remote	Maintain Open	Remote Position	B	Remote Position Indication, Exercise/2 Years Exercise Full Stroke/ Quarterly Operability Test	
NCS-MOV-511	Excess letdown heat exchanger component cooling water supply containment isolation	Remote	Maintain Close Transfer Close	Active Containment Isolation Safety Seat Leakage Remote Position	A	Remote Position Indication, Exercise/2 Years Containment Isolation Leak Test Exercise Full Stroke/Quarterly Operability Test	5
NCS-MOV-517	Excess letdown heat exchanger component cooling water return containment isolation	Remote	Maintain Close Transfer Close	Active Containment Isolation Safety Seat Leakage Remote Position	A	Remote Position Indication, Exercise/2 Years Containment Isolation Leak Test Exercise Full Stroke/Quarterly Operability Test	5

Table 3.9-14 Valve Inservice Test Requirements (Sheet 92 of 138)

Valve Tag Number	Description	Valve Type	Safety-Related Missions	Safety Functions(2)	ASME IST Category	Inservice Testing Type and Frequency	IST Notes
NCS-AOV-661A	Turbine building component cooling water supply header isolation	Remote	Maintain Close Transfer Close	Active to Failed Remote Position	B	Remote Position Indication, Exercise/2 Years Exercise Full Stroke/ Cold Shutdown Operability Test	6
NCS-AOV-662A	Turbine building component cooling water supply header isolation	Remote	Maintain Close Transfer Close	Active to Failed Remote Position	B	Remote Position Indication, Exercise/2 Years Exercise Full Stroke/ Cold Shutdown Operability Test	6
NCS-VLV-670A	Turbine building component cooling water supply header check	Check	Maintain Close Transfer Close	Active	BC	Check Exercise/ Refueling Outage	3
NCS-VLV-671A	Turbine building component cooling water supply header check	Check	Maintain Close Transfer Close	Active	BC	Check Exercise/ Refueling Outage	3

Table 3.9-14 Valve Inservice Test Requirements (Sheet 136 of 138)

Valve Tag Number	Description	Valve Type	Safety-Related Missions	Safety Functions(2)	ASME IST Category	Inservice Testing Type and Frequency	IST Notes
VWS-MOV-407	Containment Fan Cooler Chilled Water Outlet Containment Isolation Outside of CV	Remote	Maintain Close Transfer Close	Active Containment Isolation Safety Seat Leakage Remote Position	A	Remote Position Indication, Exercise/2 Years Containment Isolation Leak Test Exercise Full Stroke/ Cold Shutdown Operability Test	5 6
RMS-MOV-001	Containment Air Sampling Line Containment Isolation Inside of CV	Remote	Maintain Close Transfer Close	Active Containment Isolation Safety Seat Leakage Remote Position	A	Remote Position Indication, Exercise/2 Years Containment Isolation Leak Test Exercise Full Stroke/ Cold Shutdown Operability Test	5 6
RMS-MOV-002	Containment Air Sampling Line Containment Isolation Outside of CV	Remote	Maintain Close Transfer Close	Active Containment Isolation Safety Seat Leakage Remote Position	A	Remote Position Indication, Exercise/2 Years Containment Isolation Leak Test Exercise Full Stroke/ Cold Shutdown Operability Test	5 6

Table 5.2.1-2 ASME Code Cases

Code Case Number	Title	Applicable components
N-71-18	Additional Material for Subsection NF, Class 1, 2, 3 and MC Supports Fabricated by Welding, Section III Division 1	Supports for SG, pressurizer, RCP, PRT
N-122-2	Procedure for Evaluation of the Design of Rectangular Cross Section Attachments on Class 1 Piping Section III, Division 1	Class 1 Piping
N-249-14	Additional Materials for Subsection NF, Class 1, 2, 3, and MC Component Supports Fabricated Without Welding, Section III, Division 1	Supports for SG and RCP
N-319-3	Alternate Procedure for Evaluation of Stresses in Butt Welding Elbows in class 1 Piping Section III, division 1	Class 1 Piping
N-391-2	Procedure for Evaluation of the Design of Hollow Circular Cross Section Welded Attachments on Class 1 Piping Section III, Division 1	Class 1 Piping
N-525	Design Stress Intensities and Yield Strength Values for UNS N06690 With a Minimum Specified Yield Strength of 30 ksi, Class 1 Components Section III, Division 1	RV
N-698	Design Stress Intensities and Yield Strength Values for UNS N06690 with a Minimum Specified Yield Strength of 35 ksi (240 MPa), Class 1 Components Section III, Division 1	RV
2142-2	F-Number Grouping for Ni-Cr-Fe Filer Metals Section IX (Applicable to all Sections, including Section III, Division 1, and Section XI)	RV, SG, Pressurizer

5.4.13 Combined License Information

COL 5.4(1) *Deleted*

COL 5.4(2) *Deleted*

COL 5.4(3) *Deleted*

COL 5.4(4) *Deleted*

COL 5.4(5) *Deleted*

COL 5.4(6) *Deleted*

COL 5.4(7) *Deleted*

5.4.14 References

5.4-1 Definitions, NRC Regulations Title 10, Code of Federal Regulations, 50.2.

5.4-2 Contents of Construction Permit and Operating License Applications; Technical Information, NRC Regulations Title 10, Code of Federal Regulations, 50.34.

5.4-3 Combustible Gas Control for Nuclear Power Reactors, NRC Regulations Title 10, Code of Federal Regulations, 50.44.

5.4-4 Acceptance Criteria for Emergency Core Cooling Systems for Light-Water Nuclear Power Reactors, NRC Regulations Title 10, Code of Federal Regulations, 50.46

5.4-5 Acceptance Criteria for Reactor Coolant System Venting Systems, NRC Regulations Title 10, Code of Federal Regulations, 50.46a.

5.4-6 Environmental Qualification of Electric Equipment Important to Safety for Nuclear Power Plants, NRC Regulations Title 10, Code of Federal Regulations, 50.49.

5.4-7 Codes and Standards, NRC Regulations Title 10, Code of Federal Regulations, 50.55a

5.4-8 General Design Criteria for Nuclear Power Plants, NRC Regulations Title 10, Code of Federal Regulations, 50 Appendix A.

5.4-9 Reactor Coolant Pump Flywheel Integrity, Regulatory Guide 1.14, Rev.1, U.S. NRC, Washington, DC, August 1975.

5.4-10 Control of the Use of Sensitized Stainless Steel, Regulatory Guide 1.44, Rev.0, May 1973.

The coolant and associated debris from a pipe or component rupture (LOCA), and the containment spray drain into the RWSP through transfer pipes, as shown in Figure 6.2.1-12. The pipes are installed through the RWSP ceiling, ending as openings into the containment floor at elevation 25 ft. - 3 in. Each transfer pipe opening into the containment is protected from large debris by vertical debris interceptor bars that are capped by a ceiling plate. There are ten transfer pipes distributed around the containment at elevation 25 ft. - 3 in. To minimize containment humidity (due to evaporation from the RWSP), the transfer pipes extend from the containment floor, through the RWSP ceiling to below the normal 100% RWSP water level.

The RWSP vents are installed through the RWSP ceiling and discharge into the containment atmosphere above. The vents act to equalize the RWSP and the containment free volume air pressure, when the SI pumps or CS/RHR pumps take suction and draw down the RWSP water level. The vents consist of five pairs of vents to mix the RWSP air with the containment free volume air during post-LOCA. Each pair of vent pipes terminates below the normal RWSP water level to minimize the release of vaporized RWSP water into the containment atmosphere during normal plant operation.

As shown in Figures 6.2.2-8 and 6.2.2-9, each quadrant of the RWSP contains paired suction piping and the suction pit arrangements for the CS/RHR pumps and SI pumps. The open end of each suction pipe is equipped with a debris strainer (emergency core cooling/containment spray (ECC/CS) strainer) that satisfies NEI 04-07, "PWR Sump Performance Evaluation Methodology" and conforms to the guidance in RG 1.82 (Ref. 6.2-23).

Table 6.2.2-2 presents a comparison of the RWSP recirculation intake debris strainer (ECC/CS strainer) design to the guidance of RG 1.82 (Ref. 6.2-23).

The RWSP also is equipped with two spargers (diffusers), which are large stainless steel right circular cylinders that are capped and drilled; each sparger is located near the bottom of the RWSP at containment 90° (plant east) and 270° (plant west) azimuth. The spargers receive, and diffuse into the RWSP water, high-energy (but low volume and flow) water from emergency letdown lines and CS/RHR pump suction relief valves. The emergency letdown lines (described in Subsection 6.3.2) are directed to separate RWSP spargers. The RWSP is equipped with an overflow pipe to accommodate a level change from such discharges, as shown in Figure 6.2.1-15.

6.2.2.2.6 ECC/CS Strainers

These components are included in the ECCS. Figures 6.2.2-8 and 6.2.2-9 show four independent sets of ECC/CS strainers located in the RWSP. The strainer design includes redundancy, a large surface area to account for potential debris blockage and maintain safety performance, corrosion resistance, and a strainer hole size to minimize downstream effects. Additional design attributes are described in the US-APWR Sump Strainer Performance document (Ref 6.2-34).

As described in Chapter 3, the ECC/CS strainers are Equipment Class 2, seismic category I.

Table 6.2.2-2 Comparison of RWSP Recirculation Intake Debris Strainer Design to RG 1.82 Requirements (Sheet 2 OF 21)

No.	Regulatory Position	US-APWR Design
1.1.1.2	To the extent practical, the redundant sumps should be physically separated by structural barriers from each other and from high-energy piping systems to preclude damage from LOCA, and, if within design basis, main steam or main feedwater break consequences to the components of both sumps (e.g., trash rakes, sump screens, and sump outlets) by whipping pipes or high-velocity jets of water or steam.	Four strainers and sumps are physically separated and located inside RWSP compartment which are away from pipe area.
1.1.1.3	The sumps should be located on the lowest floor elevation in the containment exclusive of the reactor vessel cavity to maximize the pool depth relative to the sump screens. The sump outlets should be protected by appropriately oriented (e.g., at least two vertical or nearly vertical) debris interceptors: (1) a fine inner debris screen and (2) a coarse outer trash rack to prevent large debris from reaching the debris screen. A curb should be provided upstream of the trash racks to prevent high-density debris from being swept along the floor into the sump. To be effective, the height of the curb should be appropriate for the pool flow velocities, as the debris can jump over a curb if the velocities are sufficiently high. Experiments documented in NUREG ICR-6772 and NUREGICR-6773 have demonstrated that substantial quantities of settled debris could transport across the sump pool floor to the sump screen by sliding or tumbling.	Containment drains (transfer pipes) into the RWSP are protected from large debris by vertical debris bars capped by a ceiling plate. The sump openings (suction strainers) are located at approximately elevation 3 ft. - 7 in. of containment, with CSS and SI suction at approx - 1 ft. - 5 in. Disk, type suction strainer base mounted above the RWSP floor to be used, with 0.066 in hole diameter. Strainer surface area of approximately 3,510 ft^2 each to reduce the flow velocity and resist clogging, with sufficient recirculation flow and submergence to preclude vortexing.
1.1.1.4	The floor in the vicinity of the ECC sump should slope gradually downward away from the sump to further retard floor debris transport and reduce the fraction of debris that might reach the sump screen.	Suction strainer to be base mounted above level RWSP floor. Design analysis inputs for debris transport are conservative.

assembly cannot be inserted into a full location. Surfaces that come into contact with the fuel assemblies are made of annealed austenitic stainless steel.

9.1.2.2.2 Spent fuel storage

The SFP is located within the seismic category I reactor building fuel handling area. The walls of the SFP are an integral part of the seismic category I reactor building structure. The facility is protected from the effects of natural phenomena such as earthquakes (Section 3.7), wind and tornados (Section 3.3), floods (Section 3.4), and external missiles (Section 3.5). The facility is designed to maintain its structural integrity following a SSE and to perform its intended function following a postulated event such as a fire. Refer to Subsection 1.2.4.1 for further discussions of the reactor building fuel handling area.

The SFP is approximately 47 feet deep of reinforced concrete lined with stainless steel plate. The SFP normal water level is approximately 1 ft -2 in. below the operating floor with approximately 400,000 gallons of borated water. This water level allows a spent fuel assembly to be transferred with at least 133 inches of water shielding above the top of the fuel assembly for personnel protection.

Penetrations for the drain and makeup lines are located to preclude the draining of the SFP due to a break in a line or failure of a pump to stop. The connection for the SFP pumps' suction is located below normal water level and above the level needed to provide sufficient water for shielding and for cooling of the fuel if the SFPCS is unavailable.

Pipes which discharge into the spent fuel pool include a siphon break between the normal water level and the level of the SFP pumps' suction connection.

The capability to makeup to the SFP is provided by a Quality Group C, seismic category I makeup system, as discussed in Subsection 9.1.3.

A liner leakage collection system is provided to collect possible leakage from liner plate welds on the pit walls and floor. The stainless steel liners are welded to the C-shape embedment in the pit walls and floors, and the embedment are interconnected and drain to a collection point which is monitored to determine whether leakage is occurring.

The refueling canal is connected on one side to the SFP. On its opposite side, the refueling canal connects to the spent fuel cask loading pit and to the fuel inspection pit. A weir and gate provide physical isolation of the refueling canal from each of the three pits. All the gates are normally closed and only opened as required.

The SFP is not connected to the equipment drain system (Subsection 9.3.3) to preclude unanticipated drainage.

SFP water level and temperature gauges, and an area radiation monitor in the fuel handling area are provided with alarms to the main control room (MCR).

Normal auxiliary building (A/B) HVAC system provides ventilation for the fuel handling area to maintain the atmospheric pressure in this area slightly negative with respect to outside the building.

The spent fuel racks are composed of individual vertical cells, and several tiers of grid structures which interconnect each cell to rigidly maintain the cell array configuration. The racks are supported laterally by the grid structure, and each rack module is vertically supported by 4 legs on the pit floor without anchoring. Additionally, each rack cell is

9.2.1.2.2.6 Valves

The water in this ESWS does not normally contain radioactivity and, therefore, special provisions against the leakage to the atmosphere are not necessary. Isolation valves are provided upstream and downstream of each component to facilitate its removal from service.

The motor operated valve is provided at the discharge of each pump. The starting logic of the ESWP interlocks the motor operated valve with the pump operation. The closed discharge valve opens after starting the ESWP. This feature minimizes transient effects that may occur as the water sweeps out air that may be present in the system.

Each CCW HX is provided with two separate locked close isolation valves and piping around the heat exchanger for back flushing. One valve is located in the piping running from the inlet of the heat exchanger inlet isolation valve to the inlet of the heat exchanger discharge isolation valve, and the second valve is located in the piping running from the outlet of the heat exchanger inlet isolation valve to the outlet of the heat exchanger discharge isolation valve. To initiate back flush operation, both bypass valves are opened and the heat exchanger isolation valves are closed. Cooling water flows from the discharge side into the heat exchanger and is discharged from the heat exchanger inlet side to the ESW discharge line.

9.2.1.2.2.7 Deleted

9.2.1.2.3 System Operation

9.2.1.2.3.1 Normal Operation

A low signal of ESW header pressure due to tripping of the operating ESWP is alarmed in the main control room (MCR). When the alarm is achieved, the stand by component cooling water pump (CCWP) of the same subsystem and the corresponding ESWP are placed in service to resume the cooling process. The previously activated CCWP is shut off after the switch in operating pump.

Voiding in any train may occur on loss of offsite power and subsequent pump trip. In order to preclude water hammer on pump restart, the motor operated valve at the discharge of each pump is interlocked to close when the pump is not running or is tripped. This interlock prevents the pump from starting if the valve is not closed. The valve starts to open after the respective pump starts.

The effect of long-term corrosion of the piping is mitigated by adding a corrosion inhibitor. The ESW is periodically sampled and chemicals are added, as required, during normal operation.

Control of Combustible Materials

The plant is constructed using noncombustible materials to the extent practicable. The selection of construction materials and the control of combustible materials are in accordance with the guidance of RG 1.189 (Ref. 9.5.1-12) and Section 3.3 of NFPA 804 (Ref. 9.5.1-14).

The storage and use of hydrogen are in accordance with the guidance of NFPA 55 (Ref. 9.5.1-18). Hydrogen lines in safety-related areas are designed to seismic category I requirements.

Ventilation systems are designed to maintain the hydrogen concentrations in the battery rooms below 2% by volume, as described in Subsections 9.4.3 and 9.4.5.

The T/B and the turbine lubrication oil system, located in the T/B, are separated from areas containing safety-related equipment by 3-hour rated fire barriers.

The COL Applicant takes measures to assure that outdoor oil-filled transformers are separated from plant buildings in accordance with the guidance of NFPA 804 (Ref. 9.5.1-14) (See COL item 9.5(2)).

The primary fuel storage for each (4 total) emergency power source gas turbine generator (GTG) and its associated transfer pumps is located in the yard area and is below grade within a substantial concrete vault confinement. Potential fuel leaks or spills from the storage tanks are confined within the compartment surrounding the tanks. Each GTG day tank located within its GTG room is provided with a spill confinement enclosure capable of holding 110% of the day tank capacity.

Quantities and locations of other combustible materials are identified in the FHA (see Appendix 9A).

Control of Radioactive Materials

As described in the FHA (Appendix 9A), materials that collect or contain radioactivity, such as spent ion exchange resins and filters, are protected and stored in accordance with the guidance of RG 1.189 (Ref. 9.5.1-12).

9.5.1.2.2 Fire Protection Water Supply System

The fire water supply system is designed in accordance with the guidance of RG 1.189 (Ref. 9.5.1-12) and the applicable NFPA codes and standards. The fire protection water supply system is sized such that it contains sufficient water for two hours operation of the largest US-APWR sprinkler system plus a 500 gpm manual hose stream allowance to support fire suppression activities. Redundant water supply capability is provided. In addition to fire suppression activities, the fire protection water supply system may also supply water for severe accident prevention, for alternative component cooling water, and for severe accident mitigation for the containment spray system and water injection to the reactor cavity, if it is available.

Elements of the communication systems are designed for effective operation with respiratory and fire protection gear. The use of separate, redundant systems minimizes the possibility of loss of total plant communication capability due to interference or malfunction.

9.5.2.2.1 Public Address System/Page (2 way communications, PA/PL)

The plant page system with audio messenger consists of an electronic amplification system with microprocessor based mixers/amplifiers, controls, software, siren/tone and audio message generators, a centralized test and distribution cabinet, interfaces to other systems, and associated remote handsets and loudspeakers.

The public address system interfaces with the plant telephone system, the fire alarm system, and the radiation monitoring system. In the event of a fire or radiation alarm, dedicated audio messages and alarm tones are activated. The page system's primary function is intra-plant communications during plant operations, testing, calibration, startup, and off-normal conditions.

Page equipment located outdoors is designed to automatically limit the outdoor sound volume at night to a pre-set level. Speakers and handsets are installed at the farthest practical distance from noise sources. In rooms where the noise level increases during equipment operation (e.g. pump rooms), handsets are enclosed within a soundproof booth or hoods. Box-type speakers are installed in small rooms where reverberations make hearing difficult. The circuits from the main page equipment to each component junction box are ring-wired to preclude loss of the system function in the event of a single cable failure.

9.5.2.2.1.1 Operation

The system has both page and party line operations utilizing handset stations located throughout the plant. The system has one page line and multiple party lines. The lines are independent of one another. A page can be initiated from any station with the MCR having the ability to override local stations.

Each station is capable of being configured to limit the amount of time allotted for the station's handset to be off the hook. After reaching this configured time limit, the station is placed electrically on-hook, the page or party connection is broken and a trouble signal is enunciated at the central control unit.

Each party line is designed for two-way communication between zones or handset locations.

9.5.2.2.1.2 Audio Messenger Interface

The audio messenger interface generates audio messages (tones or digitally pre-recorded speech or a combination of both) and broadcasts them over the system speakers during normal or emergency conditions, including evacuation procedures, repeating at preset time periods until cancelled.

Table 9.5.7-1 Lubrication System Component Data

Main oil pump	
Quantity (per GTG)	2
Capacity (gpm)	56
Lube Oil Consumption (gpm)	0.00088
Relief valve set pressure (psig)	49
Design code	Manufacturer's standards
Driver	Gas turbine shaft driven
Seismic Category	I
Oil cooler	
Quantity (per GTG)	2
Type	Air Cooled
Air Cooling Fan	2
Codes and standards	Manufacturer's standards
Seismic Category	I
Fluid	Lubricating oil
Temperature in/out (°F)	180/151.5
Flowrate (gpm)	56
Design pressure (psig)	125
Design temperature (°F)	200
Material	Carbon steel
Reduction gear reservoir	
Quantity (per GTG)	1
Type	Horizontal, cylindrical
Capacity, each (gal)	95.1
Operating pressure/temperature (psig/°F)	atm/170-180
Material	Carbon steel
Code	ASME Section III, Class 3
Seismic Category	I
Main oil filter	
Quantity (per GT)	2
Type	Full-flow, duplex, cartridge
Flowrate (gpm)	56
Particle retention capability (μm)	10
Design pressure/temperature (psig/μF)	150/200
Housing	Carbon steel
Code (pressure boundary)	Manufacture's Standard
Seismic Category	I
Main lube oil strainer	
Quantity (per GTG)	2
Flowrate (gpm)	56
Design pressure/temperature (psig/°F)	150/200
Filtering capacity (μm)	150 mesh
Housing	Carbon steel
Screen	Stainless steel
Code (pressure boundary)	Manufacture's Standard
Seismic Category	I
Piping, fittings, and valves	
Material	Carbon steel
Design code, safety-related portion	Manufacture's Standard
Seismic Category	I

assessment of the adequacy of selected fire detection and fire suppression methods. In addition to this general assessment, the review considered individual specifics such as concentration of combustibles, type of combustibles, regulatory requirements, and property insurer's recommendations in the assessment of the adequacy of selected fire detection and fire suppression methods.

Combustible Loading Tabulations

The tabulation of combustible material on a fire area by fire area basis has traditionally been performed for nuclear power stations. As discussed above, this methodology is technically obsolete but does have some value for input to support evaluation of fire barriers and helping decide where fire protection features are required to address the fire hazards. Traditionally, this methodology has taken the maximum heat that is released if all combustibles in a given fire area/fire zone are consumed. The potential heat release (expressed in Btus or British Thermal Units) is the sum total of the product of each quantity (in pounds) times the heat of combustion (Btu/lb) of each combustible in the area. This total heat release is then divided by the floor area of compartment to determine the unit fire loading (Btu/ft^2) of the applicable fire area/fire zone. The fire hazard analysis summary table identifies on a zone by zone basis, the heat contribution within each compartment and the resulting traditional fire loading.

Fire barriers, fire detection and fire suppression methods described within this FHA are based on several factors including (in order of priority) regulatory guidance, NFPA 804 guidance, the type and quantity of combustible present, life safety, business interruption and property protection considerations, and general combustible fire loading. The fire barriers, fire detection and fire suppression methods are described in the discussion for each fire area in Section 9A.3.

9A.2.5 Fire Protection Adequacy

The adequacy of the fire protection features for a postulated fire in each fire zone or fire area is assessed. This assessment involves the following considerations:

- Compliance with regulatory guidance or requirements
- Compliance with NFPA 101 criteria
- Compliance with NFPA 804 criteria
- Verification that property insurance requirements are addressed
- Verification of fire barrier adequacy to confine a fire and limit fire damage
- Verification that the HVAC system within the area properly removes or controls smoke and limits fire spread from the area
- Verification that a fire in non-safety related areas does not threaten safety-related equipment.

10.2 Turbine-Generator (T/G)

10.2.1 Design Bases

10.2.1.1 Safety Design Bases

The T/G does not serve a safety-related function and therefore has no nuclear safety design basis. Classification of the equipment and components of the T/G in regard to the seismic and quality group is provided in Section 3.2.

The T/G could be potential source of high-energy turbine missiles, which could cause damage to safety-related equipment or systems. The turbine is designed to minimize the possibility of turbine missile generation as discussed in Subsection 10.2.3. The turbine control system and main valves arrangement is designed to minimize the possibility of turbine missile generation and is discussed in Subsection 10.2.2 in detail.

10.2.1.2 Non-Safety Power Generation Design Bases

The following is a list of the major design features of the T/G:

- The T/G is designed for base load operation and for load follow operation.
- The T/G is designed for electric power production consistent with the capability of the reactor and the reactor coolant system.
- The gross generator output at the rated thermal power of the reactor and at VWO condition is shown in the heat balance diagrams in Figure 10.1-2 and Figure 10.1-3 respectively.
- The T/G is designed to trip automatically under abnormal conditions such as overspeed greater than 110% of the rated speed. The turbine control system is designed to control the rotating speed within the range which does not activate the emergency trip system, and is also designed to trip the T/G at the failure of the control system. The redundant emergency trip system is designed to prevent the rotating speed from exceeding the design overspeed.
- The T/G is designed to allow periodic on-line testing on the main valves (main turbine stop valve (MTSV), main turbine control valves (MTCV), reheat stop valve (RSV) and Intercept valve (IV)), emergency trip system and other protection devices.
- The system and component arrangement is designed so that any single component failure will not cause exceeding design overspeed.
- The system is designed to provide proper drainage of related piping and components to prevent water induction into the main turbine.
- The moisture separator/reheaters (MS/Rs), MS/R drain tanks, generator stator cooling water demineralizer, stator cooling water tank, seal oil drain regulator, lubricant oil cooler and accumulator are designed to ASME Code Section VIII requirements

(Reference 10.2-1). The other parts are designed to the T/G manufacturer's standards.

10.2.2 Description

10.2.2.1 General Description

The T/G is an 1800rpm tandem compound six exhaust flow unit consisting of one double-flow high-pressure turbine (HPT x 1), three double-flow low-pressure turbines (LPT x 3), a generator, two sets of external moisture separator/reheaters (MS/Rs), exciter, controls, and auxiliary subsystems (see Figure 10.2-1). The major design parameters of the T/G and auxiliaries are presented in Table 10.2-1. The flow diagram Figure 10.3-4 shows the stop, control, intercept, and reheat stop valves.

The T/G and associated piping, valves, and controls are located completely within the turbine building. There are no safety-related systems or components located within the turbine building. The probability of a destructive overspeed condition and missile generation, assuming the recommended inspection and test frequencies, is less than 1 x 10^{-5} per year in accordance with NUREG-800 SRP Subsection 3.5.1.3, turbine missiles (Reference 10.2-2). In addition, the orientation of the T/G is such that a high-energy missile to be directed at an approximately 90 degree angle away from safety-related structures, systems, and components. The layout drawings that show the general arrangement of the T/G and associated equipment in relation to essential safety-related SSC are shown in Section 1.2, Figure 1.2. Failure of the T/G equipment does not preclude safe shutdown of the reactor. The T/G components and instrumentation associated with protecting the T/G from an overspeed condition are accessible under operating conditions.

The T/G foundation is a reinforced concrete structure. The T/G foundation and equipment anchorage are designed to the same seismic design requirement as the turbine building. See Section 3.7 for additional information on seismic design requirements.

10.2.2.2 Component Description

The T/G train consists of one double-flow high-pressure turbine, three double-flow low-pressure turbines and one generator. Two external MS/Rs with two stages of reheating are located on each side of the T/G centerline. The single direct-driven generator is water-cooled and rated at 1,900 MVA at 0.9 PF. Other related system components include a complete T/G bearing lubrication oil system, a Digital electro-hydraulic (DEH) control system with supervisory instrumentation, a turbine gland seal system (see Subsection 10.4.3), overspeed protective devices, turning gear, a stator coil cooling water system, H_2 & CO_2 gas control system and seal oil system, a rectifier section, and a voltage regulator.

10.2.2.2.1 Main Turbine Stop Valve and Main Turbine Control Valves (MTSV & MTCV)

The function of the MTSV is to quickly shut off the main steam flow to the turbine when the MTSVs receives a trip signal. The main function of the MTCV is to regulate the main steam flow to the turbine through the control system.

Main steam from the steam generators (SGs) enters the high-pressure turbine through four horizontally-mounted MTSVs and four plug-type MTCVs. Main steam flow through one MTSV is combined with main steam flow from the other MTSVs in the steam chamber. Two MTCVs, located in the steam chamber, direct the main steam flow to the high-pressure turbine inlet stage. There are two sets of steam chambers that are located on both sides of high-pressure turbine casing.

MTSVs are operated in on-off mode by a signal from the emergency trip system or solenoid valve for testing.

The MTSV incorporates a pilot valve. When the turbine is started, the MTCVs are fully open and the pilot valve of the MTSV is operated with full arc admission so that the turbine parts can be uniformly heated during the start-up process.

Steam strainers are located at the inlet of each MTSVs.

10.2.2.2.2 High-Pressure Turbine (HPT)

The main steam enters the HPT through the four MTCVs and the lead pipes and expands across several stationary and rotating blades axially in both the governing and generator side directions. The HPT has two extraction connections. One extraction connection supplies heating steam to both the No. 7 (final) high-pressure feedwater heaters and first stage reheater while the other extraction connection supplies heating steam to the No. 6 high-pressure feedwater heaters. Steam is exhausted to the external MS/Rs through exhaust connection taps and cross-under pipes. Part of the HPT exhaust steam is supplied to deaerating feedwater heater.

The HPT rotor is machined from an alloy steel forging (mono-block design). A separate extension shaft, which is bolted to the governor end of the rotor, carries the main oil pump and overspeed trip weight.

After assembly of the HPT rotor, the high speed balance test and overspeed test up to 120% is carried out to confirm the integrity of the HPT rotor.

10.2.2.2.3 External Moisture Separator/Reheaters (MS/R)

MS/Rs employ a two-stage reheater. The first stage reheater uses the extraction steam from the high-pressure turbine and the second stage reheater uses a portion of the main steam supply to reheat the steam to a superheated condition. The reheated steam flows through a separate reheat stop valve and intercept valve (RSV and IV) in each of six cross-over pipes leading to the inlets of the three low-pressure turbines.

The external MS/Rs use multiple banks of chevron-skip vanes (shell side) for moisture removal. The moisture removed by the external moisture separator is drained to a

moisture separator drain tank and is pumped to the deaerator (deaerating feedwater heater).

Condensed steam in the reheater (tube side), which is drained to the reheater drain tank, flows into the shell side of the No. 6 and 7 feedwater heaters, and cascades to the deaerator (deaerating feedwater heater).

10.2.2.2.4 Reheat Stop Valves and Intercept Valves (RSV and IV)

One pair of RSV and IV is installed in each cross-over pipe from the external moisture separator/reheater to the low-pressure turbines. There are a total of six pairs of RSVs and IVs.

The RSV is a butterfly-type valve and operated in on-off mode to prevent the T/G from exceeding design overspeed in response to the signal from the emergency trip system. The IV is also a butterfly-type valve and is operated through the turbine control system.

10.2.2.2.5 Low-Pressure Turbine (LPT)

There are three double flow LPTs with 74-inch last stage blades. Reheated steam enters each of the LPTs through the RSV and the IV and expands in the blade path axially through stationary and rotating blades.

The fourth, fifth, sixth and seventh extraction points of the LPT supply steam to the low-pressure feedwater heaters No. 4, 3, 2, and 1, respectively.

Moisture is removed at a number of locations along the blade path. Drainage holes drilled through the blade rings provide moisture removal from blade rings located in high moisture zones. The effectiveness of moisture removal at these locations is enhanced by moisture non-return catchers which trap a large portion of the water from the blade path and direct it to the moisture removal system.

The LPT rotors are machined from an alloy steel forging (mono-block design).

After assembly of the LPT rotor, the high speed balance test and overspeed test up to 120% is carried out to confirm the integrity of the LPT rotor.

10.2.2.2.6 Generator

The generator is a direct-driven, three-phase, 60Hz, 1800 rpm, four-pole synchronous generator with a water-cooled stator and hydrogen cooled rotor. The generator auxiliaries include a seal oil system, H_2 & CO_2 gas control system and stator-coil cooling water system. The generator excitation is static type.

10.2.2.2.6.1 Generator Cooling System

The generator is cooled by a recirculating hydrogen gas stream which is in turn cooled by gas-to-water heat exchangers. Cold gas is forced by blowers into the ventilating passage of the rotor and around the stator core through ventilating holes.

Failure of two or more speed inputs also generates an alarm and the turbine will be tripped automatically.

The DEH system consists of two redundant microprocessors, one is in the control mode and the other is in the standby mode. If the one in the control mode fails, the other one in the standby mode takes over automatically. If the one in the standby mode fails, the other one maintains control. The turbine is tripped automatically in the event that both of them fail to perform their function.

10.2.2.3.1.2 Load Control

The load control function of the DEH system develops signals that are used to regulate the unit load. Signal outputs are based on a proper combination of speed error and actual load (turbine megawatt) reference signals.

Steam-flow is not controlled directly but rather by turbine megawatt and valve position. Under normal conditions, the turbine requests a certain megawatt load target. Through a coordinated mode of control, the turbine valves adjust the steam flow from the steam generators supplied to the turbine.

10.2.2.3.1.3 Valve Control

The flow of the main steam entering the high-pressure turbine is controlled by four main turbine stop valves (MTSVs) or four main turbine control valves (MTCVs). Each MTSV is controlled by electro hydraulic servo actuators in response to the signals from the DEH system. When the turbine is placed in operation, the MTCVs are fully opened and the MTSVs are modulated. The function of the MTSVs is to shut off the steam flow to the turbine when required. The MTSVs are closed by actuation of the emergency trip system devices. These devices are independent of the DEH system.

The MTCVs are positioned by electro hydraulic servo actuators in response to the signals from the DEH system. When the turbine speed reaches the rated speed using the MTSVs, the MTCVs are fully open. During turbine operation, the MTCVs are modulated by the DEH system and MTSVs are fully open, MTCVs and MTSVs are completely closed on turbine trip.

The reheat stop and intercept valves (RSVs & IVs), located in the cross-over pipes at the inlet to the low-pressure turbines, control steam-flow to the low-pressure turbines. During normal operation of the turbine, the RSVs and IVs are fully open. The IVs are controlled by electro hydraulic servo actuators in response to the signals from the DEH system during startup and normal operations and they close rapidly on loss of turbine load and turbine trip. The RSVs close completely on turbine overspeed and turbine trip.

The MTSVs, MTCVs, RSVs and IVs have dump valves connected to the hydraulic portion of their respective valve actuators. Opening a dump valve causes the connected control or stop valve to rapidly close. The dump valve actuators are connected to trip headers and open in response to loss of pressure in the connected emergency trip header. The control and intercept dump valves are connected to the DEH overspeed protection

control emergency trip header and the stop and reheat stop dump valves are connected to the emergency trip header.

10.2.2.3.1.4 Power/Load Unbalance

A power/load unbalance circuit initiates fast closing of the MTCVs and the IVs under load rejection conditions that might lead to rapid rotor acceleration and consequent overspeed.

Valve action occurs when the power/load unbalance exceeds the load by 30 percent or more. LPT inlet steam pressure is used as a measure of turbine power. Generator current is used as a measure of generator load to provide discrimination between a loss of load incident and an electric system fault.

When a power/load unbalance condition is detected, the OPC solenoid valves are quickly energized to close the MTCVs and the IVs. When the condition clear, the power/load unbalance circuitry resets automatically, and the OPC solenoid valves are reset.

10.2.2.3.1.5 Overspeed Protection

The DEH system has two modes of operation to protect the turbine against overspeed. The first mode is the speed control which maintains the desired speed as discussed in Subsection 10.2.2.3.1.1. The second mode is the overspeed protection control which operates if the normal speed control should fail or upon a loss of load. An overspeed protection demand is sent to the OPC solenoid valve for MTCVs and IVs. The solenoid valve is energized and a drain path for the hydraulic fluid opens in the overspeed protection control header, if the turbine speed exceeds 103 percent of the rated speed. The loss of fluid pressure in the header causes the MTCVs and the IVs to close. If the speed falls below rated speed following an overspeed protection controller action, the header pressure is reestablished, the MTCVs and the IVs are reopened, and the unit resumes speed control. Refer to Table 10.2-2 for a description of the sequence of events following a full loss of load and the nominal trip setpoints. An emergency trip system is also provided to trip the turbine in the event that speed in exceeds of the overspeed protection trip points. The emergency trip system is discussed in Subsection 10.2.2.3.2.1.

Redundancy is built into the overspeed protection control in the DEH system. The failure of a single OPC solenoid valve will not disable the trip functions. Loss of hydraulic pressure in the emergency trip system causes the turbine to trip. Therefore, damage to the overspeed protection components, results in the closure of the valves and the interruption of steam-flow to the turbine.

Quick closure of the steam valves prevents turbine overspeed. Valve closing times are given in Table 10.2-4.

10.2.2.3.1.6 Automatic Turbine Control (ATC)

The ATC provides safe and proper startup and loading of the turbine generator. The ATC programs monitor the applicable limits and precautions during turbine operation

- Each rotor, stationary and the rotating blade path component is inspected visually and by magnetic particle testing on its accessible surfaces. Ultrasonic inspection of the side entry blade grooves is conducted. These inspections are conducted at intervals of about 10 years for both high-pressure and low-pressure turbines.

- A 100 percent surface examination of couplings and coupling bolts is performed.

- The fluorescent penetrant examination is conducted on nonmagnetic components.

- At least one main steam stop valve, one main steam control valve, one reheat stop valve, and one intercept valve are dismantled approximately every 3 years during scheduled refueling or maintenance shutdowns. A visual and surface examination of the valve internals is conducted. If unacceptable flaws or excessive corrosion are found in a valve, the other valves of the same type are inspected. Valve bushings are inspected and cleaned and bore diameters are checked for proper clearance.

- Main stop valves, control valves, reheat stop and intercept valves may be tested with the turbine online. The DEH control test panel is used to stroke or partially stroke the valves.

- Extraction nonreturn valves are tested prior to each startup.

- Turbine valve testing is performed at quarterly intervals. The quarterly testing frequency is based on nuclear industry experience that turbine-related tests are the most common cause of plant trips at power. Plant trips at power may lead to challenges of the safety-related systems. Evaluations show that the probability of turbine missile generation with a quarterly valve test is less than the evaluation criteria.

- Extraction nonreturn valves are tested locally by stroking the valve full open with air, then equalizing air pressure, allowing the spring closure mechanism to close the valve. Closure of each valve is verified by direct observation of the valve arm movement.

The Combined License Applicant is to develop turbine maintenance and inspection procedure and then to implement prior to fuel load. Plant startup procedure including warm-up time will be completed therein.

10.2.4 Evaluation

Components of the turbine-generator are conventional and typical of those which have been extensively used in other nuclear power plants. Instruments, controls, and protective devices are provided to confirm reliable and safe operation. Redundant, fast actuating controls are installed to prevent damage resulting from overspeed and/or full load rejection. The control system initiates turbine trip upon reactor trip. Automatic low-pressure exhaust hood water sprays are provided to prevent excessive hood temperatures. Exhaust casing rupture diaphragms are provided to prevent low-pressure cylinder overpressure in the event of loss of condenser vacuum. The diaphragms are flange mounted and designed to maintain atmospheric pressure within the condenser and turbine exhaust housing while passing full flow.

Since the steam generated in the steam generators is not normally radioactive, no radiation shielding is provided for the turbine-generator and associated components. Radiological considerations do not affect access to system components during normal conditions. In the event of a primary-to-secondary system leak due to a steam generator tube leak, it is possible for the steam to become contaminated. Discussions of the radiological aspects of primary-to-secondary leakage are presented in Chapters 11.

10.2.5 Combined License Information

COL 10.2(1) Inservice Inspection

The Combined License Applicant is to develop turbine maintenance and inspection procedure and then to implement prior to fuel load. Plant startup procedure including warm-up time will be completed therein.

10.2.6 References

10.2-1 Rules for Construction of Pressure Vessels, ASME Boiler and Pressure Vessel Code, Section VIII,Division 1.

10.2-2 U.S. Nuclear Regulatory Commission, Standard Review Plan for the Review of Safety Analysis Reports for Nuclear Power Plants, NUREG-800, Section 3.5.1.3 Rev.3, March 2007.

10.2-3 U.S. Nuclear Regulatory Commission, Standard Review Plan for the Review of Safety Analysis Reports for Nuclear Power Plants, NUREG-800, Section 10.2 Rev.3, March 2007.

10.2-4 U.S. Nuclear Regulatory Commission, Operating Experience Feedback Report - Turbine-Generator Overspeed Protection Systems, NUREG-1275, Vol. 11, April 1995

10.2-5 Standard Specification for Vacuum-Treated Carbon and Alloy Steel Forgings for Turbine Rotors and Shafts, ASTM A470

10.2-6 Standard Test Methods and Definitions for Mechanical Testing of Steel Products, ASTM A370

10.2-7 Rules for Construction of Nuclear Facility Components, ASME Boiler and Pressure Vessel Code, Section III

10.2-8 Nondestructive Examination, ASME Boiler and Pressure Vessel Code, Section V

10.2-9 Probability of Missile Generation from Low Pressure Turbines, MUAP-07028(R0)-P (Proprietary) and MUAP-07028(R0)-NP(Nonproprietary), December 2007.

10.2-10 Probabilistic Evaluation of Turbine Valve Test Frequency, MUAP-07029(R0)-P (Proprietary) and MUAP-07029(R0)-NP (Nonproprietary), December 2007

Table 10.2-1 Turbine-Generator and Auxiliaries Design Parameters

Manufacturer Mitsubishi Heavy Industries, Ltd.	
Turbine	
Type	Tandem compound six exhaust flow
Number of elements	4 (one HPT and three LPTs)
Last-stage blade length (in.)	74
Operating speed (rpm)	1,800
Design condensing pressure (in. HgA)	1.5
Generator	
Expected generator output at 100% NSSS output (kW)	1,700,000
Power factor	0.9
Generator rating (kVA)	1,900,000
Hydrogen pressure (psig)	75
Moisture separator/reheater	
Moisture separator	Chevron vanes
Reheater	U-tube
Number	2 shell
Stages of reheating	2
Feedwater heating system	
Number of stages	7 (2 HP heaters, Deaerator and 4 LP heaters)

10.3 Main Steam Supply System

The main steam supply system (MSS) as described in this section runs from the US-APWR steam generator nozzle up to the main turbine stop valve, including the branch piping.

The main function of the MSS is to transport steam from the steam generators (SGs) to the high-pressure turbine and to the moisture separator reheater over a range of flows and pressures covering the entire operating range from system warmup to valve wide open (VWO) turbine conditions.

The system also supplies steam to the main turbine gland seal system, the emergency feedwater (EFW) pump turbine(s), the deaerator heater (heater no. 5) and the auxiliary steam supply system (ASSS). The system also dissipates heat generated by the nuclear steam supply system (NSSS) by means of turbine bypass valves (TBV) to the condenser or to the atmosphere through air-operated main steam relief valves (MSRV), or the motor-operated main steam depressurization valves (MSDV) or the spring-loaded main steam safety valves (MSSV) when either the turbine-generator or condenser is unavailable.

10.3.1 Design Bases

10.3.1.1 Safety Design Bases

The system is provided with a main steam isolation valve (MSIV) and an associated main steam bypass isolation valve (MSBIV) in each main steam line. These valves isolate the secondary side of the SGs to prevent the uncontrolled blowdown of more than one SG and isolate non safety-related portions of the system.

The MSS safety design bases are as follows:

Conformance to GDC 2 (Reference 10.3-1) assures that the SSC of the MSS can withstand the effects of natural phenomena, hence guaranteeing the capability of the system to perform its safety functions. The safety-related portions are protected from the effects of wind and tornado as described in Section 3.3; flood protection as described in Section 3.4; and seismic design as described in Section 3.7.

Conformance to GDC 4 (Reference 10.3-1) assures that the safety-related SSC of MSS are resistant to the effects of the environmental conditions associated with normal operation, maintenance, testing, and postulated accidents, including LOCAs. The design includes suitable protection so that dynamic effects, including internally generated missiles, pipe whipping, and discharging fluids due to equipment malfunctions and external events do not pose a threat to system integrity. The safety-related portions are protected from missile protection as described in Section 3.5; protection against dynamic effects associated with the postulated rupture of piping as described in Section 3.6; and environmental design as described in Section 3.11.

In conformance with GDC 5 (Reference 10.3-1), no equipment of MSS is shared between safety-related units to preclude consequential effects of malfunctioning components within the system.

Branch connections are provided from the main steam lines to perform various functions. Upstream of MSIVs, connections are provided for emergency feedwater pump turbine feed, MSSVs, MSRVs, MSDVs, low point drains, high point vents and nitrogen blanketing. Branch piping downstream of MSIVs, includes connections for MS/R reheaters, gland seal system, pegging steam for dearating feedwater heater, ASSS, turbine bypass system and low point drains.

All four main steam lines are tapped to supply two emergency feedwater pump turbines. This assures steam supply under a postulated main steam line break accident.

A branch line from the equalization piping supplies pegging steam to the deaerator. Steam is supplied during the following conditions:

- Plant startup to preheat the feedwater flow
- Following a turbine trip or load rejection when main steam is used to maintain positive pressure in the deaerator.

The turbine glands receive sealing steam from the MSS via a branch line from the equalization piping. The branch line connects to the supply header from the ASSS. During startup the ASSS supplies steam to the turbine glands. Sealing steam is switched from the ASSS to the MSS after the main steam becomes available at the equalization piping. A power operated valve isolates MSS from the GSS and ASSS when main steam is not the source for the gland sealing steam.

Piping design data is provided in Tables 10.3.2-3 and 10.3.2-4

10.3.2.2.2 Main Steam Line Drains

The main steam piping layout provides for the collection and drainage of condensate to avoid water entrenchment. The lines are sloped in the direction of steam flow.

To minimize the possibility of water induction into the main turbine, drain traps are provided at low points in the main steam piping where water may collect. Condensate from these drains is piped to the main condenser.

Each drain trap arrangement consists of a float trap provided for continuous moisture removal and is piped in parallel with an automatic, power operated bypass valve. Automatic control is accomplished at the drain pot attached on the upstream of the trap by a level control device, which opens or closes the valve. Water collected in the drain trap is continuously removed during normal plant power operations.

10.3.2.3 Component Description

10.3.2.3.1 Main Steam Piping

The main steam lines between the SGs and the containment penetration are designed to meet the leak before break criteria. The portion of the main steam lines between the containment penetration and the anchor downstream of the MSIV is part of the break

exclusion zone. Section 3.6 addresses the applicability of leak before break and break exclusion zone to the main steam line. This piping is designed to Seismic Category I requirements.

Each SG outlet nozzle is equipped with a flow restrictor to limit the flow in the event of a steam line break. This flow restrictor is a multi-flow nozzle-type with a throat diameter of equivalent to16 inches.

Main steam piping is designed to minimize the effects of erosion/corrosion. Pipe material, pipe wall thickness, fluid velocity, fluid chemistry and piping arrangement affect erosion/corrosion damage.

The main steam piping to the turbine is sized to limit velocities to minimize potential erosion and routed to minimize bends/elbows. Selected pipe wall thickness includes corrosion allowance, accounting for the design life of the plant and pipe wall thickness inspections are performed to monitor wall erosion.

Design parameters for the main steam piping are provided in Table 10.3.2-1 and 10.3.2-3.

10.3.2.3.2 Main Steam Safety Valves

MSSVs with sufficient rated capacity are provided to prevent the steam pressure from exceeding 110 percent of the MSS design pressure:

The total capacity of these valves is 105% of the main steam flow rate at rated power conditions.

MSSV rated capacity is tabulated in Table 10.3.2-2.

Six MSSVs are provided per main steam line. Table 10.3.2-2 provides performance data and set pressure for the MSSVs.

The MSSVs are located in the safety-related portion of the main steam piping upstream of the MSIVs and outside the containment in the main steam/feedwater piping area. Adequate space is provided for the installation and support of the valves. Static or dynamic loads when operating or when subject to seismic events are considered.

The piping and valve arrangement and design analysis is performed in accordance with the guidelines in ASME Section III, Non-mandatory Appendix O, "Rules for Design of Safety Valve Installations." (Reference 10.3-10)

The COL applicant is to address the actual throat area of the MSSVs.

Each MSSV is connected to a vent stack. The stacks are arranged and designed to prevent steam backflow from the transition piece and to minimize the backpressure on the valve outlet.

The vent stacks are designed and supported to withstand SSE loads. This is to prevent the vent stacks from being damaged and jeopardizing the performance of safety-related

- The nondestructive examination procedures and acceptance criteria used for the examination of tubular products conform to the provisions of the ASME Code, Section III, Paragraphs NC/ND-2550 through 2570 (Reference 10.3-6). Refer to Section 6.6 for details on equipment class 2 and 3 components.

- Cast austenitic stainless steel materials are inspected by volumetric methods.

10.3.6.3 Flow-Accelerated Corrosion (FAC)

As noted in Subsection 10.3.6.2, MSS and CFS piping materials selected are corrosion resistant. CFS chemistry is controlled to have an environment that minimizes corrosion. This is further described in Subsection 10.3.5.

Pipe schedules/wall thicknesses are selected taking into consideration expected corrosion over the design life of the plant. Corrosion allowances meet the requirements of ASME section III (Reference 10.3-6) for safety class piping and ASME B31.1 (Reference 10.3-7) for non safety class piping.

Piping design and layout minimizes bends and elbows. Pipe sizes are selected to have velocities within industry recommended values.

The Combined License Applicant is to address preparation of a FAC monitoring program for carbon steel portions of the steam and power conversion systems that contain water or wet steam.

10.3.7 Combined License Information

COL 10.3(1) FAC monitoring program
The Combined License Applicant is to address preparation of a FAC monitoring program for carbon steel portions of the steam and power conversion systems that contain water or wet steam.

COL 10.3(2) Safety and relief valve information
The Combined License Applicant is to address the actual throat area of the MSSV.

10.3.8 References

10.3-1 General Design Criteria for Nuclear Power Plants, NRC Regulations Title 10, Code of Federal Regulations, 10CFR Part 50, Appendix A.

10.3-2 Station Blackout, Regulatory Guide 1.155 Rev.0, August 1988.

10.3-3 Loss of all alternating current power, NRC Regulations Title 10, Code of Federal Regulations, 10CFR Part 50.63.

10.3-4 Protection Against Low-Trajectory Turbine Missiles, Regulatory Guide 1.115 Rev.1, July 1977.

Table 10.3.2-2 Main Steam System Valves (Sheet 1 of 3)

Main Steam Safety Valve

Number of valves per main steam line	6
Total number of valves	24
Relieving capacity per valve	884,000 (lb/hr) at design pressure
Relieving capacity per main steam line	5,302,500 (lb/hr) at design pressure
Total relieving capacity	21,210,000 (lb/hr) at design pressure
Valve type	Spring type
Valve size	6 (in)
Design pressure	1,185 (psig)
Design temperature	568 (°F)
Design code	ASME Section III, Class 2
	Seismic category I

Valve number	Set pressure (psig)	Relieving capacity (lb/hr)
NMS-VLV509 (A,B,C,D)	1,185	884,000
NMS-VLV510 (A,B,C,D)	1,215	906,000
NMS-VLV511 (A,B,C,D)	1,244	928,000
NMS-VLV512 (A,B,C,D)	1,244	928,000
NMS-VLV513 (A,B,C,D)	1,244	928,000
NMS-VLV514 (A,B,C,D)	1,244	928,000

Main Steam Relief Valve

Number per main steam line	1
Total number of valves	4
Valve size	6 (in)
Design capacity per valve	531,000 (lb/hr) at 1,150 (psig)
Total	2,121,000 (lb/hr) at 1,150 (psig)
Design pressure	1,185 (psig)
Design temperature	568 (°F)
Design code	ASME Section III, Class 2 Seismic category I
Actuator	Air-operated, modulating

Table 10.3.2-2 Main Steam System Valves (Sheet 2 of 3)

Main steam depressurization valve

Number per main steam line	1
Total number of valves	4
Valve size	6 (in)
Design capacity per valve	9.72×10^4 (lb/hr) at 125 (psia)
Total	38.9×10^4 (lb/hr) at 125 (psia)
Design pressure	1,185 (psig)
Design temperature	568 (°F)
Design code	ASME Section III, Class 2 Seismic Category I
Actuator	Motor-operated, modulating

Main Steam Relief Valve Block Valve

Number per main steam line	1
Total number of valves	4
Valve size	6 (in)
Design pressure	1,185 (psig)
Design temperature	568 (°F)
Design code	ASME Section III, Class 2 Seismic Category I
Actuator	Motor-operated

Main Steam Isolation Valves

Number per main steam line	1
Total number of valves	4
Valve size	32 (in)
Design pressure	1,185 (psig)
Design temperature	568 (°F)
Design code	ASME Section III, Class 2 Seismic Category I
Actuator	Air-operated

Table 10.3.3-1 Main Steam Supply System Failure Modes and Effects Analysis (Sheet 1 of 3)

Item	Description of component	Active Safety function	Plant operating mode	Failure mode(s)	Method of failure detection	Failure effect on system safety function capability
1	Main Steam Isolation Valve (MSIV) NMS-AOV-515A,B,C,D Normally open, fail closed air-operated valve	Isolates each main steam line. Isolates containment.	During power operation	Fails closed or fails to open on demand	Valve position Indication on the main control room	No safety-related impact on plant. Plant goes to safe shutdown condition.
			Steam System Piping Failure Steam Generator Tube Rupture Loss of Coolant Accident Safe shutdown	Solenoid valve for actuating the MSIV fails to open on demand	Valve testing is done in accordance with the Inservice Testing Program. If there are any problems with the solenoid valve, the failure is detected during the testing.	No safety-related impact on plant. MSIV is actuated by a separate train of solenoid valves with redundancy and different class 1E power bus. Failure of either train of solenoid valves does not impair isolation function of MSIV.
2	Main Steam Depressurization Valve (MSDV) NMS-MOV-508A,B,C,D Normally closed, fail as is motor-operated valve	Provide for controlled removal of reactor decay heat (in conjunction with the EFWS).	During power operation	Fails open or fails to close on demand	Valve position indication on the main control room	No safety-related impact on plant. Analysis shows no adverse effect assuming larger steam discharge rate than design rate of the valve.
			Steam Generator Tube Rupture Safe shutdown	Fails to open on demand	Valve position indication on the main control room	No safety-related impact on plant. Valves on intact SG steam lines provide RCS cooling and plant shutdown.
3	Main Steam Relief Valve (MSRV) NMS-PCV-465,475,485, 495 Normally closed, fail closed air-operated valve	-	During power operation	Fails open or fails to close on demand	Valve position indication on the main control room	No safety-related impact on plant. Analysis shows no adverse effect assuming larger steam discharge rate than design rate of the valve.
4	Main Steam Bypass Isolation Valve (MSBIV) NMS-HCV-3615A,B,C,D Normally closed, fail closed air-operated valve	Isolates containment	Loss of Coolant Accident	Fails to close on demand	Valve position indication on the main control room	No safety-related impact on plant. Containment boundary remains intact with redundancy provided by this valve, SGs and main steam lines.

Table 10.3.3-1 Main Steam Supply System Failure Modes and Effects Analysis (Sheet 2 of 3)

Item	Description of component	Active Safety function	Plant operating mode	Failure mode(s)	Method of failure detection	Failure effect on system safety function capability
5	Main Steam Safety Valve (MSSVs) NMS-VLV-509A,B,C,D NMS-VLV-510A,B,C,D NMS-VLV-511A,B,C,D NMS-VLV-512A,B,C,D NMS-VLV-513A,B,C,D NMS-VLV-514A,B,C,D Normally closed	Protect each SG from over pressurization	During power operation	Spurious opening or failure to reset after opening	Valve position indication on the main control room	No safety-related impact on plant. Analysis shows no adverse effect assuming larger steam discharge rate than design flow rate of the valve.
6	Main Steam Relief Valve Block Valve (MSRVBV) NMS-MOV-507A,B,C,DN ormally opened, fail as is motor-operated valve	Isolates containment.	Loss of Coolant Accident	Fails to close on demand	Valve position indication on the main control room	No safety-related impact on plant. Containment boundary remains intact with redundancy provided by this valve, SGs and main steam lines.
7	Main Steam Drain Line Isolation valve (MSDIV) NMS-MOV-701A,B,C,D Normally opened, fail as is motor-operated valve.	Isolates containment.	Loss of Coolant Accident	Fails to close on demand	Valve position indication on the main control room	No safety-related impact on plant. Containment boundary remains intact with redundancy provided by this valve, SGs and main steam lines.
8	Steam Generator Blowdown CV Isolation valve SGS-AOV-001A,B,C,D Normally opened, fail closed air-operated valve.	Isolates SG blowdown. Isolates containment.	Loss of Non-emergency AC Power Loss of Nominal Feedwater Feedwater System Pipe Break Steam Generator Tube Rupture Safe shutdown	Fails to close on demand	Valve position indication on the main control room	No safety-related impact on plant. Isolation is achieved by redundant steam generator blowdown isolation valve (SGS-AOV-002A,B,C,D).
			Loss of Coolant Accident	Fails to close on demand	Valve position indication on the main control room	No safety-related impact on plant. Containment boundary remains intact with redundancy provided by this valve, SGs and main steam lines.

Table 10.3.3-1 Main Steam Supply System Failure Modes and Effects Analysis (Sheet 3 of 3)

Item	Description of component	Active Safety function	Plant operating mode	Failure mode(s)	Method of failure detection	Failure effect on system safety function capability
9	Steam Generator Blowdown Isolation Valve SGS-AOV-002A,B,C,D Normally opened, fail closed air-operated valve.	Isolates SG blowdown.	Loss of Non-emergency AC Power Loss of Nominal Feedwater Feedwater System Pipe Break Steam Generator Tube Rupture Safe shutdown	Fails to close on demand	Valve position indication on the main control room	No safety-related impact on plant. Isolation is achieved by redundant steam generator blowdown CV isolation valve (SGS-AOV-001A,B,C,D).
10	Steam Generator Blowdown Sample Isolation Valve SGS-AOV-031A,B,C,D Normally opened, fail closed air-operated valve.	Isolates SG blowdown. Isolates containment.	Loss of Non-emergency AC Power Loss of Nominal Feedwater Feedwater System Pipe Break Steam Generator Tube Rupture Safe shutdown	Fails to close on demand	Valve position indication on the main control room	No safety-related impact on plant. The size of SG blowdown sample line is very small that no safety-related impact on plat.
			Loss of Coolant Accident	Fails to close on demand	Valve position indication on the main control room	No safety-related impact on plant. Containment boundary remains intact with redundancy provided by this valve, SGs and main steam lines.

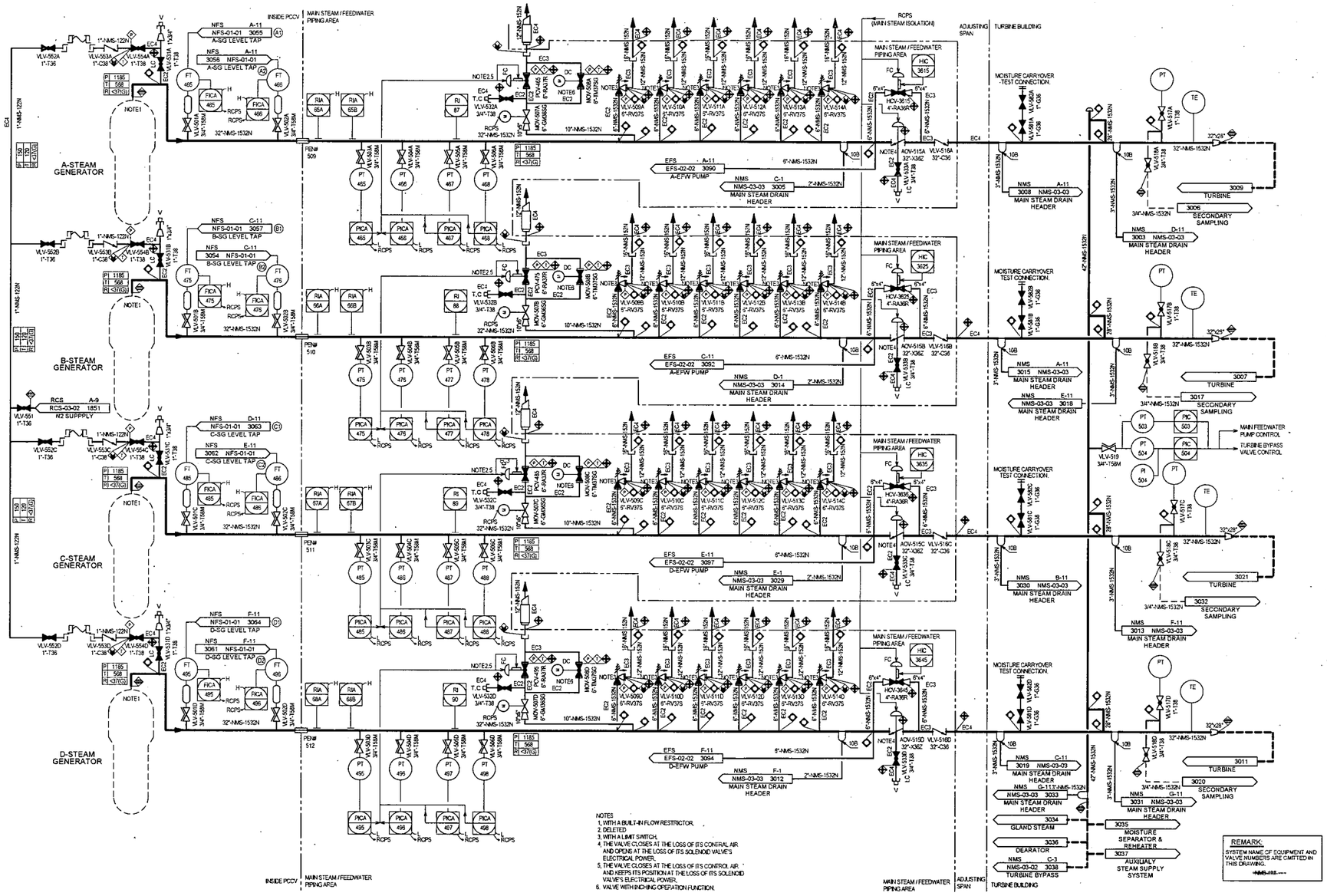

Figure 10.3-1 Main Steam Supply System Piping and Instrumentation Diagram (1/4)

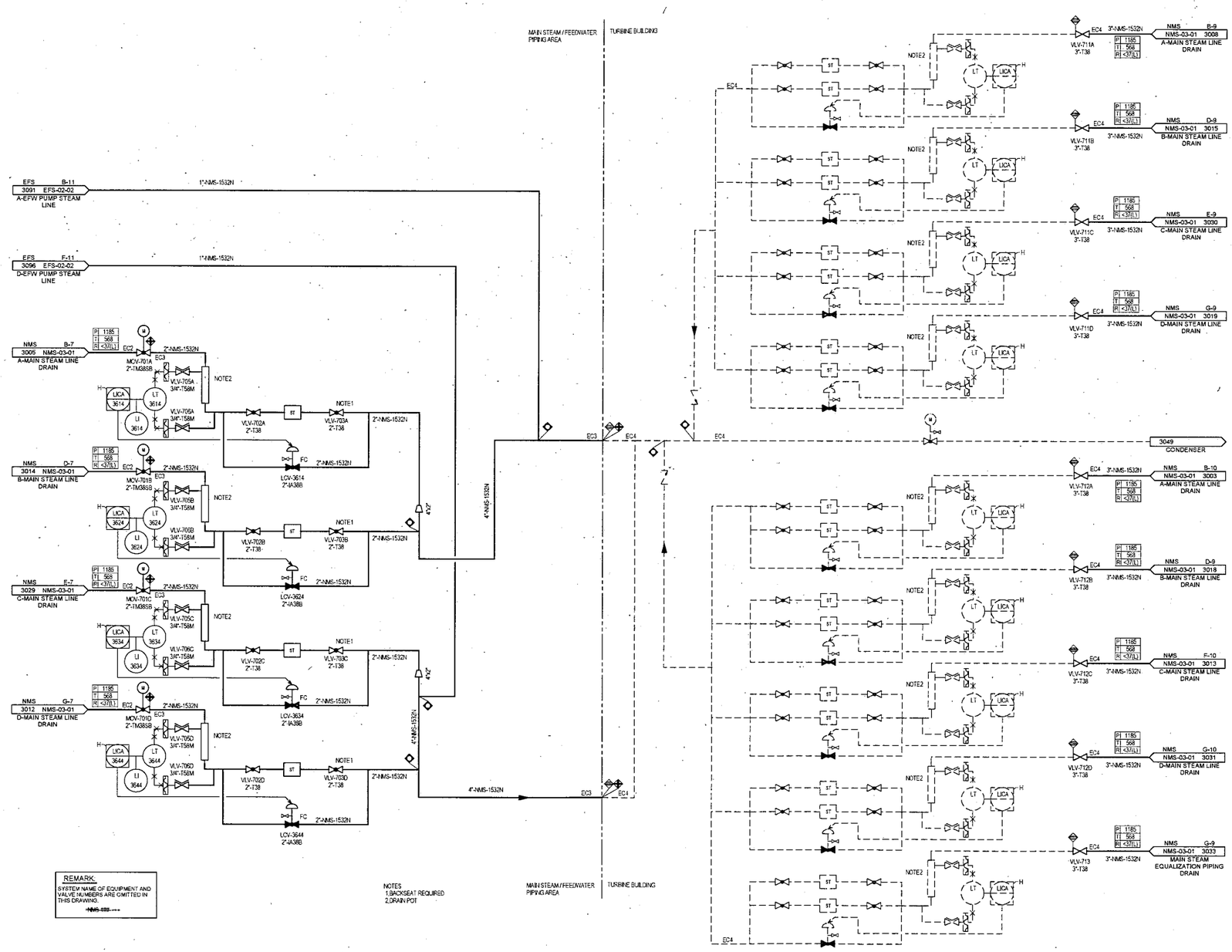

Figure 10.3-3 Main Steam Supply System Piping and Instrumentation Diagram (3/4)

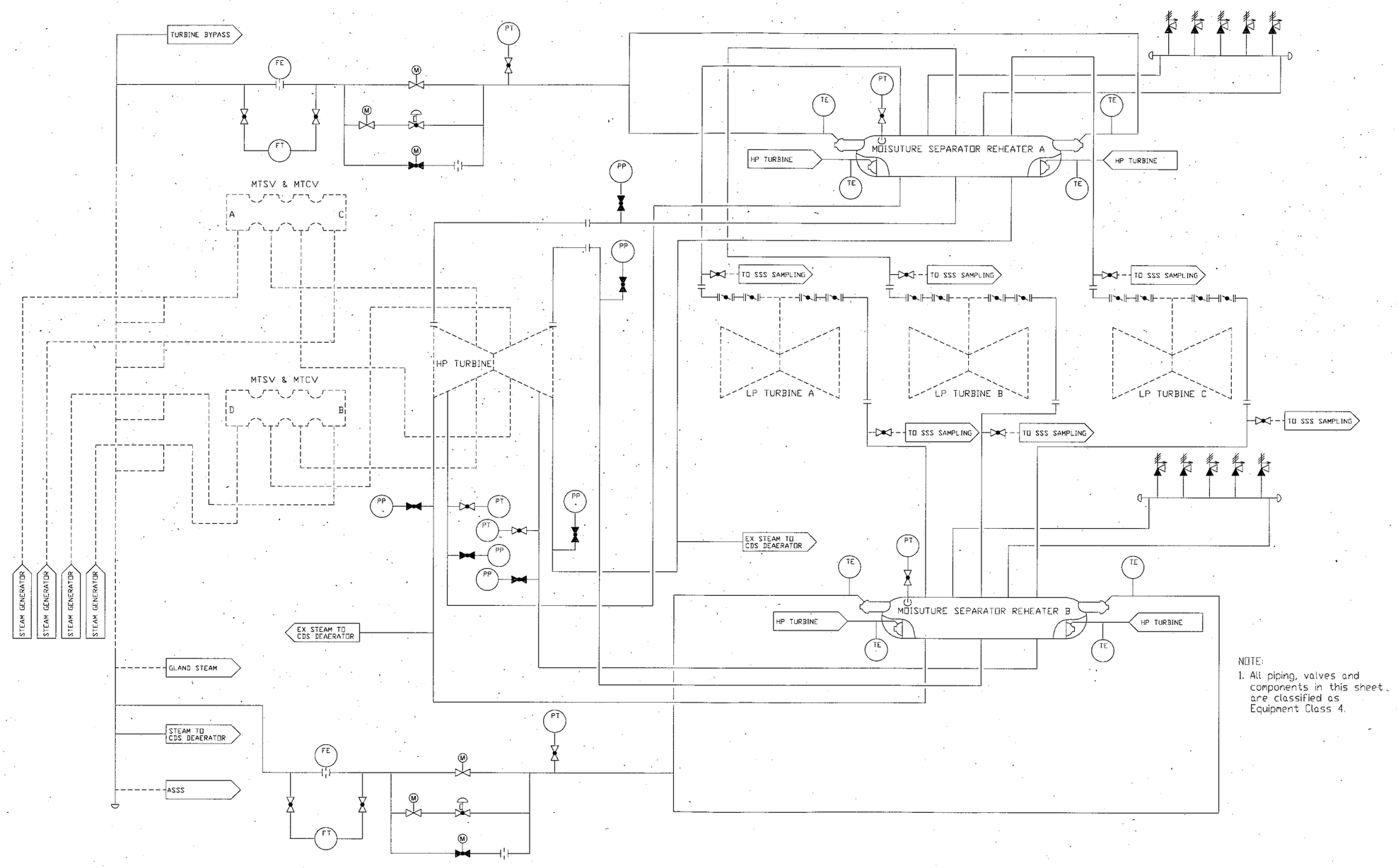

Figure 10.3-4 Main Steam Supply System Piping and Instrumentation Diagram (4/4)

10.4 Other Features of Steam and Power Conversion System

10.4.1 Main Condensers

The main condenser functions to condense and deaerate the exhaust steam from the main turbine and provide a heat sink for the turbine bypass system.

10.4.1.1 Design Basis

10.4.1.1.1 Safety Design Basis

The main condenser performs no safety-related function and therefore has no nuclear safety design basis.

10.4.1.1.2 Power Generation Design Basis

- The main condenser is designed to receive and condense the rated power exhaust steam flow from the low-pressure turbine and to perform as a reservoir for vents and drains from various components.

- The main condenser is also designed to receive and condense the turbine bypass steam up to 68 percent of plant rated steam flow, while condensing the residual low-pressure turbine steam flow. This condensing action is accomplished without exceeding the maximum allowable condenser backpressure for main turbine operation.

- At the normal operating water level, the condenser hotwell is designed for a five minute hold up time at rated condensate flow rate.

- The main condenser is designed to deaerate the condensate so that the dissolved oxygen in the condensate remains under 10 ppb during rated power operation.

10.4.1.2 System Description

The main condenser is part of the condensate system (CDS). The condensate system is described in Subsection 10.4.7 and shown in Figure 10.4.7-1 through 10.4.7-4. Classification of equipment and components is given in Section 3.2. Table 10.4.1-1 provides main condenser design data.

The main condenser is a three-shell, single-pass, single pressure, divided water boxes and rigidly supported unit. Each shell is located beneath its respective low-pressure turbine. The condenser is equipped with titanium tubes. The titanium material provides good corrosion and erosion resisting properties.

The condenser shells operate at the same pressure and temperature due to the equalizing pipe, which connects each condenser shell at neck area. Condensate is drawn from the hotwell of each condenser, and then flows through a single header to the suction of the condensate pumps.

The condenser shells are located below the turbine building operating floor and are rigidly supported on the turbine foundation. An expansion connection is provided between each low-pressure turbine exhaust opening and the steam inlet connections of the condenser. Four low-pressure feedwater heaters are located in the neck area of each condenser shell. Nozzles are provided at the bottom of condenser hotwell for instrumentation and control and leak detection connections.

10.4.1.2.1 System Operation

During normal power operation, exhaust steam from the low-pressure turbines is directed into the main condenser shells. The condenser also receives system flows from feedwater heater vents and drains and gland steam condenser drain.

The hotwell level controller provides automatic makeup or rejection of condensate to maintain a normal level in the condenser hotwells. On low level, the makeup control valves open and admit condensate to the hotwell from the condensate storage tank. On high-water level, the condensate reject control valves open to divert water from the condensate pump discharge to the condensate storage tank. This rejection automatically stops when the hotwell level reaches normal operating range.

Air inleakage and noncondensable gases contained in the turbine exhaust steam are collected in the condenser and removed by the main condenser air removal system. The main condenser evacuation system is discussed further in Subsection 10.4.2.

To protect the condenser shells and turbine outer casings from overpressurization, steam relief blowout diaphragms are provided in the low-pressure turbine outer casings. Pressure transmitters are provided on the condenser shells to detect the loss of the condenser vacuum. Pressure transmitters generate a turbine trip signal upon detecting the condenser pressure above its setpoint.

The main condenser is capable of accepting up to 68 percent of rated load main steam flow from the turbine bypass system. Operation of the turbine bypass system is discussed in Subsection 10.4.4.

In the event of a high condenser pressure or trip of all circulating water pumps, or trip of all condensate pumps, the turbine bypass valves are prohibited from opening.

Perforated distribution piping or baffle plates are installed to protect the condenser tubes, feedwater heaters located in the condenser neck, and other condenser components from turbine bypass steam or high-temperature drains entering the condenser shell.

The main condenser interfaces with the tube leak detection system to permit sampling of the condensate in the condenser hotwell. Should circulating water in-leakage occur, these provisions permit determination of which tube bundle has sustained the leakage. Steps may be taken to repair or plug the leaking tubes. This is performed by isolating the circulating water system from the affected water box. Plant power is reduced as necessary. The water box is then drained and the affected tubes are either repaired or plugged.

10.4.2 Main Condenser Evacuation System

The main condenser evacuation function is achieved by the main condenser evacuation system (MCES) with vacuum pumps. The MCES removes noncondensable gases from the main condenser during plant startup and normal operation and establishes and maintains a vacuum in the main condenser.

10.4.2.1 Design Bases

10.4.2.1.1 Safety Design Bases

The MCES does not serve any safety-related function, and thus, has no safety design bases.

10.4.2.1.2 Non-safety Power Generation Design Bases

- The MCES is designed to remove noncondensable gases from the main condenser during plant startup and normal operation, and to exhaust them to the environment in conformance with General Design Criteria (GDC) 60 and 64 of Appendix A to 10 CFR Part 50 (Reference 10.4-1).
- The MCES is designed to establish and maintain a vacuum in the main condenser during plant startup and normal operation by the use of vacuum pumps.
- The vacuum pumps are sized in accordance with Heat Exchange Institute (HEI) "Standards for Steam Surface Condensers" (Reference 10.4-2).
- Piping and valves are designed in accordance with ASME B31.1 "Power Piping" (Reference 10.4-3).

10.4.2.1.3 Classifications

The classification of the MCES is given in Section 3.2.

10.4.2.2 System Description

10.4.2.2.1 General Description

The MCES is shown in Figure 10.4.2-1.

The MCES consists of three vacuum pumps. The vacuum pumps remove noncondensable gases from the three condenser shells during normal operation and are used for condenser hogging during plant startup. Noncondensable gases with water vapor are drawn from the condenser shells, through the air cooler section of the condenser tube bundle core, to the suction of the vacuum pumps.

Air, nitrogen, and ammonia are mainly included in these noncondensable gases. Therefore, hydrogen buildup is not expected in the condenser shells. Dissolved oxygen will be present in the condensate and condenser hotwell inventory. Only trace amounts of

this oxygen will be released in the condenser, and the amounts are considered negligible compared to the large amounts of air being evacuated by the MCES. Therefore, the potential for explosive mixtures within the condenser shells does not exist.

The turbine component cooling water system provides the cooling for the vacuum pump seal water cooler. The vacuum pump seal water cooler uses turbine component cooling water so that the seal water is kept cooler than the saturation temperature of the condenser at its operating pressure to maintain the required pump performance.

The noncondensable gases removed from the main condenser and exhausted by the vacuum pumps are directed to the vent of the MCES. The exhaust flow is monitored for radioactivity prior to exhaust to environment. The noncondensable gases that are exhausted to the environment from the MCES are not normally radioactive. However, it is possible for the noncondensable gases to become contaminated in the event of primary-to-secondary system leakage. When an unacceptable radioactivity level is detected in the exhaust flow, adequate operating procedures are implemented. A discussion of the radiological aspects of primary-to-secondary leakage, including anticipated release from the system, is included in Chapter 11.

As long as the MCES is operable, the reactor coolant system operation is not affected. When the MCES becomes inoperable, a gradual decrease in condenser vacuum would result from the buildup of noncondensable gases. This decrease in condenser vacuum would cause a decrease in the turbine cycle efficiency. If the MCES remains inoperable, the condenser vacuum decreases to the turbine trip setpoint and a turbine trip is initiated.

A loss of condenser vacuum incident is described in Subsection 15.2.3.

10.4.2.2.2 Component Description

The MCES consists of three vacuum pumps. Each vacuum pump is supplied as packaged units and includes a liquid ring type vacuum pump, seal water cooler, seal water pump, separator tank.

The seal water pump supplies seal water from the separator tank to the vacuum pump. The seal water is used to seal clearances in the pump and also to condense vapor at the inlet to the pump.

The seal water cooler is installed between the vacuum pump and the seal water pump and cools the seal water by the turbine component cooling water. The seal water flows through the shell side of the seal water cooler and the turbine component cooling water flows through the tube side.

The separator tank separates mist water from noncondensable gases and store up the separated water. Seal water make up is provided to the separator tank by the condensate system and demineralized water system.

The design data of major system components are provided in Table 10.4.2-1.

10.4.2.2.3 System Operation

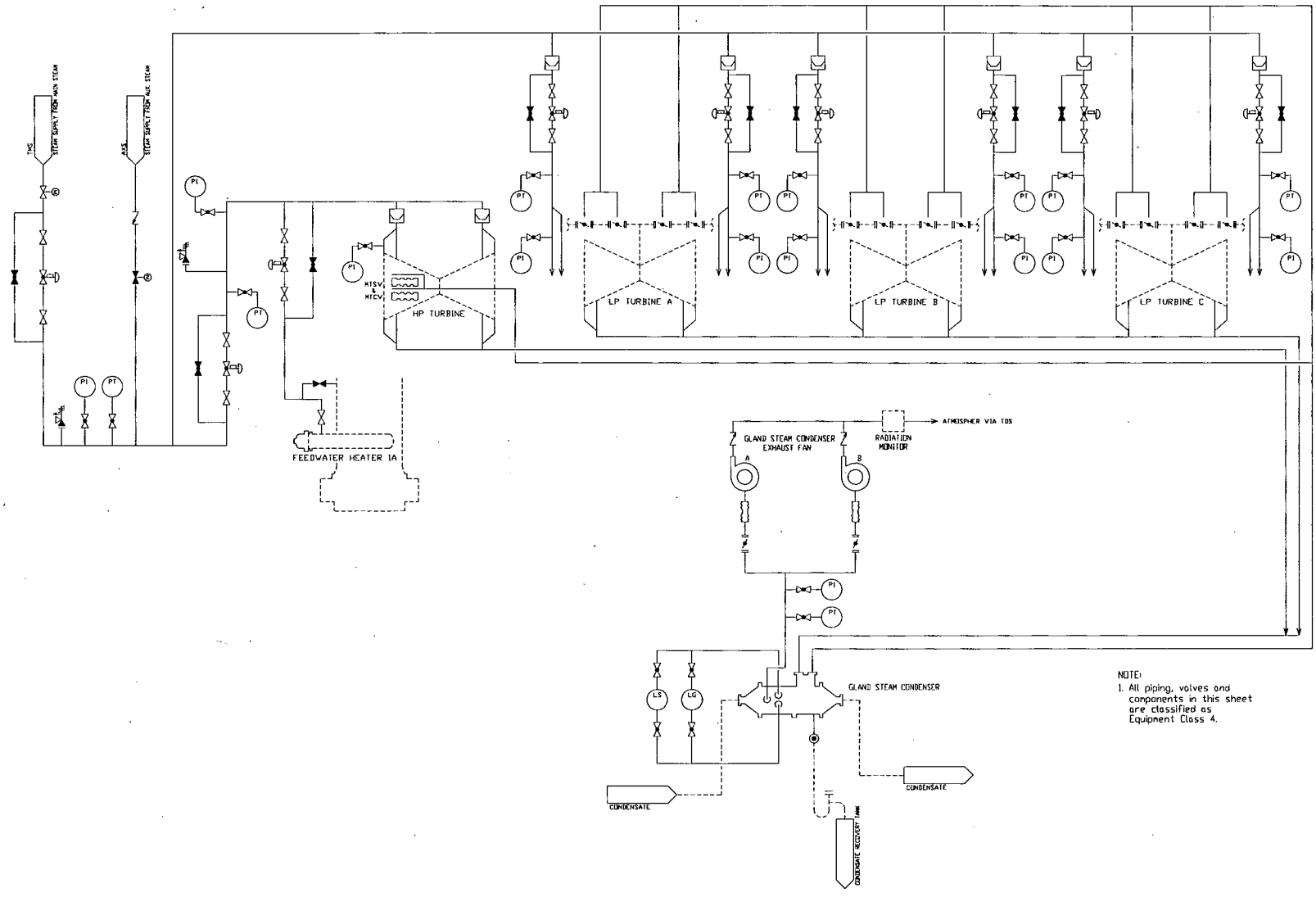

Figure 10.4.3-1 Gland Seal System Piping and Instrumentation Diagram

10.4.4 Turbine Bypass System

The turbine bypass system (TBS) as described in this Subsection is part of the main steam system (MSS) and provides capability to flow the main steam from the steam generators (SG) to the main condenser bypassing the main turbine. This is done in a controlled manner to dissipate heat and to minimize transient effects on the reactor coolant system during startup, hot standby, cooldown and the generator step-load reduction.

10.4.4.1 Design Bases

10.4.4.1.1 Safety Design Bases

The TBS serves no safety-related function and thus has no nuclear safety design basis.

10.4.4.1.2 Non-safety Power Generation Design Bases

The following is a list of the non-safety power generation design bases:

- The TBS has the capacity to bypass 68 % of the rated power steam flow to the main condenser at full power operation.
- The TBS is designed to sustain a 100 % load rejection (electrical load), without generating a reactor trip, and without requiring actuation of the main steam relief valve (MSRV), main steam safety valve (MSSV) or pressurizer safety valve.
- The TBS is designed to bypass steam to the main condenser during plant shutdown to facilitate a manually controlled cooldown of the reactor coolant system to the point where the residual heat removal system can be placed in service for further cooldown.
- The TBS bypasses steam to the main condenser during plant startup
- The TBS is designed to follow rapid turbine load reductions greater than 10 % but less than 100 % without resulting in reactor trip.

10.4.4.2 System Description

10.4.4.2.1 General Description

The TBS is part of the MSS and is shown on Figures 10.3-2 and 10.3-3. The equipment and component classification and applicable codes and standards are provided in Section 3.2..

The TBS consists of a turbine bypass valve header tapped from the main steam equalization piping upstream of the main turbine stop valves, piping, valves and instrumentation. Two individual sub-headers per condenser shell are tapped from the bypass valve header. Lines with the TBVs are connected to these sub-headers. TBVs discharge to condenser shell(s) via two sub-headers per shell.

10.4.5 Circulating Water System

The circulating water system (CWS) supplies cooling water to remove heat from the main condensers, under varying conditions of power plant operation and site environmental conditions, described in Table 10.4.5-1.

10.4.5.1 Design Bases

10.4.5.1.1 Safety Design Basis

The CWS does not have a safety-related function and has no safety design basis.

10.4.5.1.2 Non safety Power Generation Design Basis

CWS removes heat load during startup, normal shutdown, transient condition, or turbine trip, when a portion of the main steam is bypassed to the main condenser via the turbine bypass valves (TBV). If the main condenser is not available during a loss of offsite power (LOOP) event, cooldown of the reactor is achieved by using the main steam depressurization valves rather than the turbine bypass system (TBS).

10.4.5.2 System Description

10.4.5.2.1 General Description

Figure 10.4.5-1 depicts the CWS flow diagram. The CWS draws water from the CWS cooling tower (CTW) Basin, and returns water to the CWS CTWs after passing through main condenser. The CWS and CTW design and selection is subject to site-specific environmental conditions, as indicated in Table 10.4.5-1. The COL Applicant is to determine the site-specific final system configuration and system design parameters for the CWS including makeup water and blowdown.

The CWS has the following design functions:

The CWS supplies cooling water at the specified flow rate to condense the steam in the condenser, in accordance with the heat balance provided in Section 10.1.

The CWS is automatically isolated in the event of gross leakage into the turbine building (T/B) condenser area to prevent flooding of the T/B.

The CWS is designed such that a failure in a CWS component (piping, cooling tower, expansion joint, pump, etc.) does not have a detrimental effect on any safety-related equipment/component.

The CWS is composed of eight, 12.5 percent capacity circulating water pumps, CTWs, CTW basins, makeup water pump(s), blowdown pump(s), and associated piping, valves, strainers, and instrumentation.

The circulating water pumps are located in the CTW Basins, and take suction from the

CTW basin and pump water through the main condenser under varying conditions of power plant loading and design weather conditions. Design parameters for the major components are described in Table 10.4.5-1.

The CWS consists of two CTW assemblies which provide 100 percent cooling for normal power operation. Each CTW assembly contains two (2) back-to-back rows of CTWs. The discharge piping from the circulating water pumps is headered together into an intake manifold concrete pipe, as shown in Figure 10.4.5-1. The CWS supply and discharge piping to the three shell main condenser contains butterfly-type isolation valves.

Makeup water is provided by the raw water system to compensate for the CTW evaporation, drift and blowdown. The CTW water chemistry is controlled by the CWS/raw water system chemical treatment system. It should be noted that two non-essential service water (non-ESW) pumps are located in the turbine building, and take suction from the CWS piping in the turbine building. The non-ESW flows through the turbine component cooling water system (TCS) heat exchangers, and connects back to the main condenser outlet piping. In addition to the CWS flow, the CTW are sized to also cool the non-ESW flow. The non-ESW is described in Subsection 9.2.9.

10.4.5.2.2 Component Description

The circulating water system consists of the following major components:

- Circulating water pumps
- Cooling towers and CTW basins
- Main condenser
- Condenser tube cleaning equipment
- CTW make up water and blowdown system
- Chemical treatment system
- Instrumentation and controls

10.4.5.2.2.1 Circulating Water Pumps

The circulating water pumps (eight 12.5% capacity) are vertical pump, wet pit type, single-stage mixed flow pumps driven by direct drive electric motors. Each cooling tower basin contains four circulating water pumps that are arranged in parallel.

10.4.5.2.2.2 Cooling Towers

Mechanical draft cooling towers have been selected for the CWS.

There are two CTWs each with 30 cells. Each cooling tower is arranged in two rows of 15 cells in each row, with the rows arranged back to back.

The cooling towers are located outdoors, a sufficient distance from any equipment or structure important to reactor safety.

The cooling towers and foundation are designed for wind load and earthquake loads.

10.4.5.2.2.3 Condenser tube cleaning

A condenser tube cleaning system is provided.

10.4.5.2.2.4 Cooling Tower Makeup Water Pumps

Two 100% capacity makeup water pumps provide wakeup water. The makeup water pump provides the makeup water to the cooling tower basins. The makeup water pumps are vertical, driven by electric motors and are located in the raw water intake structure.

10.4.5.2.2.5 Blowdown Pumps

Two 100% capacity CTW blowdown pumps are located in each cooling tower basin. These pumps take suction from the CTW basin and discharge into the raw water source.

10.4.5.2.2.6 Piping and Valves

All above ground CWS piping is carbon steel piping designed, fabricated, installed and tested in accordance with ASME B31.1 Power Piping Code (Reference 10.4-3), with an internal coating of corrosion preventive compound. The underground portions of the circulating water system piping are constructed of pre-stressed concrete pressure piping with lining. The piping is arranged to allow easy access for inspection (i.e., access man ways for the large CWS underground pre-stressed concrete headers).

Motor-operated butterfly valves are provided in each of the circulating water lines at the inlet and exit from the condenser shell to allow isolation of portions of the condenser. Motor-operated butterfly valves are also provided at the discharge of each circulating water pump. Control valves are provided for the regulation of cooling tower blowdown and makeup.

10.4.5.2.2.7 Main Condenser

Refer to Subsection 10.4.1.

10.4.5.2.2.8 Chemical Injection

Biocide, algaecide, pH adjuster, corrosion inhibitor, and silt dispersant are injected into the CWS by the chemical injection system to maintain a non-scale forming condition and

to limit biological growth. The chemicals are injected by metering pumps. Chlorine concentration is measured by grab samples. Residual chlorine is measured to monitor the effectiveness. Chemical injection is interlocked with each circulating water pumps to prevent chemical injection when the circulating water pumps are not running. Chemical injection is also provided for in the makeup water and blowdown systems.

10.4.5.3 Operation

10.4.5.3.1 Plant Startup

CWS is in operation prior to establishing vacuum in the main condenser.

10.4.5.3.2 Normal Operation

The circulating water pumps take suction from the CTW basin structure and circulate the water through the tube side of the single-stage main condenser to maintain the required vacuum conditions, and CWS is returned to the discharge piping network in the cooling tower. The mechanical draft CTWs cool the circulating water by discharging the water over a network of baffles in the tower. The water then falls to the basin beneath the cooling tower and, in the process, gives up heat to the atmosphere.

The flow to the CTW can be diverted directly to the basin, bypassing the tower internals. This is achieved by opening the motor-operated bypass valve(s) while operating the number of circulating water pumps, as necessary.

The makeup water pumps supply water to the CTWs to replace water losses due to evaporation, wind drift, and blowdown. The makeup water is supplied to the cooling tower basin.

During normal plant operation, biocides are added to the circulating water to control biological growth, as needed.

Blowdown from the CWS is taken from the cooling tower basin and is dechlorinated, as required, and discharged. Water being discharged into the lake/river/pond meets appropriate regulatory requirements.

10.4.5.3.3 Plant Shutdown

When the condenser is available, the CWS operates until the RHR system is placed in service. The CWS is not required during safe-shutdown following a DBA, nor when the condenser is not available.

10.4.5.3.4 Abnormal Operation

10.4.5.3.4.1 Circulating water Piping/Expansion Joint Failures

Large CWS leaks due to pipe/expansion joint failures is indicated and alarmed in the control room by a loss of vacuum in the condenser shell. The effects of flooding due to a CWS failure, such as the rupture of an expansion joint, assumes that the flow into the T/B

comes from both the upstream and downstream side of the break and also conservatively assumes that one system isolation valve does not fully close. This does not result in detrimental effects on safety-related equipment since there is no safety-related equipment in the T/B and the base slab of the T/B is located at grade elevation.

Water from a system rupture discharges from the T/B through a relief panel in the T/B wall before the level can rise high enough to cause damage. Site grading carries the water away from safety-related buildings.

Based on the above conservative assumptions, the CWS and related facilities are designed such that the selected combination of plant physical arrangement and system protective features ensures that credible potential circulating water spills inside the T/B remain confined inside the T/B condenser area.

The CTWs are located outdoors, a sufficient distance from any equipment or structure important to reactor safety. A postulated CWS line break in the yard area or a failure in the CTW basin does not impact any safety-related component or any component required for safe-shutdown of the plant, since the nuclear island is physically located far from the CTW basin structure.

10.4.5.3.4.2 Leakage from/into the System

Any leakage from the CWS due to tube leakage into the main condenser is detected by the secondary sampling system (SSS).

Also, the TCS is maintained at a higher pressure than the non-ESW system (which draws water from CWS) to prevent leakage of the non-ESW into the TCS.

Small CWS leaks would drain into the T/B drain sump via the floor drains. The T/B drain sump is provided with sump pumps and with high-level alarms.

10.4.5.4 Safety Evaluation

The circulating water system is a non safety-related system, and hence, no safety evaluation is provided.

10.4.5.5 Tests and Inspections

All active components of the CWS are accessible for inspection during plant power generation. The circulating water pumps, makeup water pumps and blowdown pumps are tested in accordance with the Standards of the Hydraulic Institute (Reference 10.4-5).

Performance, hydrostatic, and leakage tests associated with preinstallation and preoperational testing are performed on the CWS in accordance with the standards of the Hydraulic Institute (Reference 10.4-5) and the American Water Works Association Code 504-70 (Reference 10.4-6). The performance along with the structural and leak-tight integrity of all system components are demonstrated by continuous operation.

A full power performance test of the CWS shall be performed following initial full power

operation in accordance with CWS CTW Performance Standard ASME PTC 23 (Reference 10.4-7).

See Chapter 14 for details.

10.4.5.6 Instrumentation Applications

CWS valves, which control the flow path, can be operated by local controls or by remote controls located in the main control room.

The motor-operated circulating water pump discharge isolation valves are provided with position switches required for status indication in the main control room, and the interlock for the pumps.

Local pressure indications are provided on the circulating water pump discharge lines.

Differential pressure transmitters are provided to monitor the inlet/outlet differential pressure across each condenser tube bundle.

On the inlet and outlet branches to the condenser, local and remote temperature indications are provided.

Flow measurement for the makeup water to the CTW and for the CTW blowdown are provided.

Level instrumentation to monitor the water level in the condenser discharge water boxes are provided.

Level instrumentation in the main control room annunciates a low/high water level in the CTW basin.

Level instrumentation in the CTW basin activates makeup water flow from the raw water system when required by transmitting level signals to the CTW makeup water valves. The CTW basin makeup water valves can be aligned from the main control room.

CTW blowdown is controlled as a function of plant load (condensate flow) and circulating water conductivity, to maintain total dissolved solids (TDS) below a pre-established level. CTW blowdown also has a manual mode of operation.

The sampling system for the CWS periodically tests the circulating water quality to ensure that no harmful effects result to the system piping and valves due to improper water chemistry.

Level switches are provided in the T/B to monitor flooding conditions and to trip the CWS pumps and close the valves of the CWS in case of a system component failure, and high-high water level condition.

Various status indications and alarms are provided for the CWS in the main control room.

Table 10.4.5-1 Design Parameters for Major Components of Circulating Water System (Sheet 1 of 3) (see Note 1)

Ambient design temperature	
Design wet bulb temperature, (°F) (5% Exceedance)	76 (78 including 2 °F recirculation)
Circulating water pumps	-
Number of pumps	8
Flowrate (gpm)	164,715
Mechanical draft cooling towers	-
Number of towers	2
Number of cells in each cooling tower	30
Design inlet temperature (°F)	104
Design outlet temperature (°F)	88.5
Design temperature rise (°F)	15.5
CTW design approach temperature (°F)	10.5
Design flowrate (gpm)	1,290,720 plus 27,000 (for Non essential service water)

Table 10.4.5-1 Design Parameters for Major Components of Circulating Water System (Sheet 2 of 3) (see Note 1)

Makeup water pumps	
Number of pumps	2
Flowrate (gpm)	31,200
Blowdown pumps	
Number of pumps	2
Flowrate (gpm)	12,900

Table 10.4.5-1 Design Parameters for Major Components of Circulating Water System (Sheet 3 of 3) (see Note 1)

Piping and components design data	
Design pressure/temperature, (psig/°F)	85/110
Material for Intake and discharge tunnel	Pre-stressed reinforced concrete with appropriate lining, if required by the CWS water chemistry.
Material for CWS above ground piping	ASTM A106, Grade B carbon steel piping with lining
Type of CWS major valves	Motor-operated butterfly valves. AWWA C504

Note:

1. Design parameters are dependent on site-specific conditions, and these values will change.

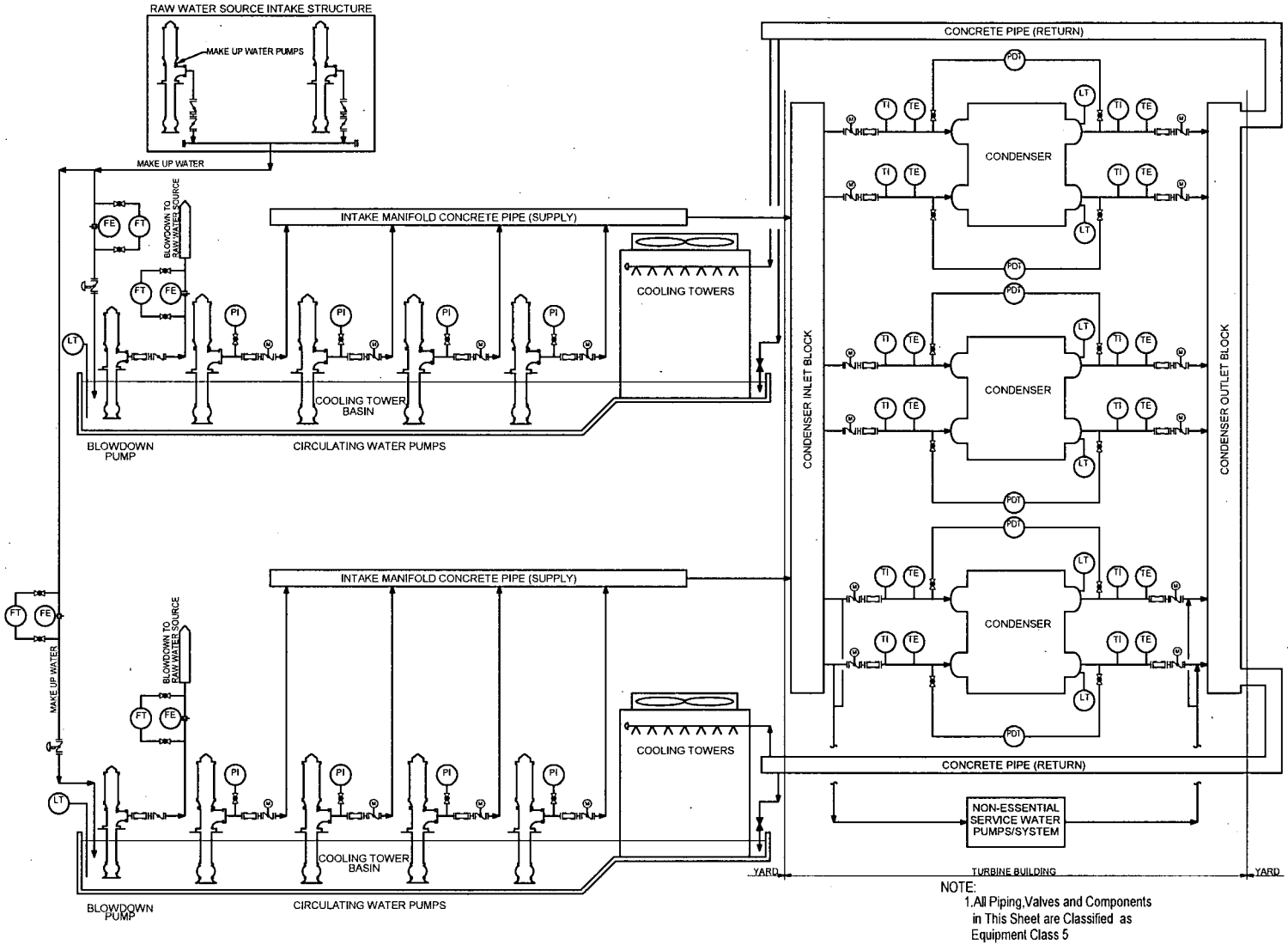

Figure 10.4.5-1 Circulating Water System Piping and Instrumentation Diagram

10.4.6 Condensate Polishing System

The condensate polishing system (CPS) is designed to remove dissolved ionic solids and impurities from the condensate. The CPS provides condensate cleanup capability and maintains condensate quality, on as needed basis, through demineralization.

10.4.6.1 Design Bases

10.4.6.1.1 Safety Design Bases

The CPS does not serve any safety-related function, and, thus, has no safety design bases.

10.4.6.1.2 Non safety Power Generation Design Bases

- The CPS is designed to remove dissolved ionic solids and impurities from the condensate and assists in the removal of corrosion products.
- With a condenser tube leak of 0.001 gpm CPS is designed to assist normal continuous plant operation until repairs can be made.
- With a condenser tube "faulted" leak of 0.1 gpm, the CPS is designed to maintain plant operation until an orderly shutdown is achieved.
- The CPS is in a side stream arrangement, and processes one-third of the rated condensate flow during start up and clean up (impurities removal) of condensate.

10.4.6.2 System Description

10.4.6.2.1 General Description

The CPS is designed with prefilters to remove corrosion products and with deep bed mixed resin vessels (demineralizers) to remove ionic impurities from the condensate during plant startup, hot standby, shutdown operations, and power operation.

Condensate polishing vessels and prefilters are installed in the 2nd floor of T/B.

The condensate bypass valve is located in the condensate pump discharge header to bypass condensate polishing vessels. The flow rates to condensate polishing vessel are controlled by the condensate bypass valve according to the requirements of the CPS.

The condensate polishing system is shown in Figure 10.4.6-1.

The requirements for the condensate purity of the CPS effluent are determined as shown in Table 10.4.6-2 to satisfy secondary side water chemistry guidelines for feedwater as described in Subsection 10.3.5.

10.4.6.2.2 Component Description

The major components of the condensate polishing system are described below.

Condensate Prefilters and Polishing Vessels

Three condensate prefilters are provided in the CPS to remove corrosion products from the condensate feed to the polishing vessels. Three deep bed mixed resin (anion and cation resins) condensate polishing vessels (demineralizers) are included in the CPS. One prefilter is dedicated for each polishing vessel. Prefilters and polisher vessels are constructed of carbon steel with a protective rubber lining on the inside of the vessel.

Resin Traps

Three resin traps are in the CPS. Each trap is located after a polisher vessel on the effluent piping side. The resin trap is monitored for high differential pressure, and an alarm indicates the need to backwash the trap.

Spent Resin Holding Vessel

One spent resin holding vessel is in the CPS. It is used for storage of exhausted or spent resin prior to shipping offsite for regeneration. The spent resin tank is constructed of carbon steel with an interior protective rubber lining.

Resin Mixing and Holding Vessel

One fresh resin mixing and holding vessel is in the CPS. It is used for mixing and storage of fresh mixed anion and cation resins for charging to the condensate polishing vessels. The fresh resin mixing and holding vessel is constructed of carbon steel with an interior protective rubber lining.

Portable Resin Addition Hopper and Eductor

Fresh resin is added to the resin mixing and holding vessel from a portable resin addition system consisting of a hopper and an eductor with associated piping and valves. The hopper is constructed of carbon steel. The eductor uses demineralized water to transfer the resin to the vessel.

10.4.6.2.3 System Operation

10.4.6.2.3.1 Normal Operation

The condensate polishing system cleans up all of the condensate inventory before the plant startup. During this operation, the maximum condensate flow through the CPS is one-third of the rated condensate flow. The condensate flow rate through the CPS during plant startup is one third of the rated condensate flow. The duration of the plant startup is shortened by utilization of the CPS.

The condensate polishing system is completely bypassed during normal power operation. If the secondary side water quality cannot be met with the maximum flow of the steam generator blow down, up to 33% of the rated condensate flow is processed through the

CPS until normal water chemistry is restored.

Spent resin is removed from the polishing vessel and replaced with fresh resin. Resin replacement requires the polisher vessel to be taken out of service. Spent resin is transferred hydro pneumatically to the spent resin holding vessel until it can be removed to offsite for regeneration. Spent resin is normally non-radioactive and does not require any special packaging or handling. In the event of radioactive contamination of the resin in a vessel, temporary shielding is installed if required. Radioactive resin is transferred from the spent resin holding tank to the radwaste treatment area for waste management.

10.4.6.2.3.2 Condenser Tube Leak

The CPS goes into service if a main condenser tube leak occurs. The CPS is capable of maintaining the condensate water quality until an orderly shutdown is achieved as long as 0.1 gpm of cooling water comes into the condenser even in the high AVT operation. High AVT operation is changed to normal AVT operation when the CPS is in service.

10.4.6.3 Safety Evaluation

The CPS does not serve any safety-related function, and, thus, requires no safety evaluation.

10.4.6.4 Tests and Inspections

Testing and inspection of the CPS is performed prior to plant operation to verify proper functioning of the equipment and instrumentation in accordance with Chapter 14 requirements.

10.4.6.5 Instrumentation Applications

The affected polisher with its associated prefilter and resin trap train is removed from service when: (1) a high differential pressure exists across the polisher vessel, (2) the ion exchange capacity is exhausted as evidenced by a high effluent conductivity and high sodium, chloride or silica level in the effluent, or (3) at the completion of a pre-determined volume throughput.

The resin trap is monitored for high differential pressure, and an alarm indicates the need to backwash the trap.

The differential pressure across each of the three prefilters is measured and transmitted to the indication in the main control room. The affected prefilter with its associated polisher vessel and resin trap train are removed from service when a high differential pressure exists across the prefilter.

The differential pressure across the CPS influent and effluent main header piping is measured and transmitted to the indication in the main control room.

When the condensate polisher is in service, this differential pressure instrumentation provides an indication of the overall pressure drop through the CPS, and a control signal

to the condensate polisher bypass valve which maintains sufficient flow through the CPS for optimum performance. The CPS is removed from service by the operator: (1) during power operation with normal secondary water chemistry, or (2) at the completion of start up, clean up or other modes of operation.

The resin mixing and holding vessel level and the spent resin holding vessel level are measured and indicated locally and in the main control room. On high-level alarm, influent line valves are closed automatically to prevent overflow.

The isolation valves close after receipt of an isolation signal to limit the mass and energy release to containment consistent with the containment analysis presented in Chapter 6.

The safety-related portions of the FWS are designed to remain functional during and after a safe-shutdown earthquake (SSE) and to perform their intended function of isolating feedwater flow following postulated events.

Conformance to GDC 2 (Reference 10.4-1) assures that the SSC of the CFS can withstand the effects of natural phenomena, hence guaranteeing the capability of the system to perform its safety functions. The safety-related portions are protected from the effects of wind and tornado as described in Section 3.3; flood protection as described in Section 3.4; and seismic events as described in Section 3.7.

Conformance to GDC 4 (Reference 10.4-1) assures that the safety-related SSC of CFS are resistant to the effects of the environmental conditions associated with normal operation, maintenance, testing, and postulated accidents, including LOCAs. The design includes suitable protection so that dynamic effects, including internally generated missiles, pipe whipping, and discharging fluids due to equipment malfunctions; and external events do not pose a threat to system integrity. The safety-related portions are protected from missile protection as described in Section 3.5; protection against dynamic effects associated with the postulated rupture of piping as described in Section 3.6; and environmental design as described in Section 3.11.

In conformance with GDC 5 (Reference 10.4-1), no equipment the CFS is shared between safety-related units to preclude consequential effects of malfunctioning components within the system.

In conformance with GDC 44 (Reference 10.4-1), the CFS has sufficient redundancy for heat removal in conjunction with MSS, and is designed to permit appropriate periodic inspection of important components for conformance to GDC 45 (Reference 10.4-1).

In conformance with GDC 46 (Reference 10.4-1), the CFS is designed to permit appropriate functional testing of the system and components to ensure structural integrity and leak-tightnes.

The FWS' intended safety functions can be performed, assuming a single active component failure coincident with the loss of offsite power.

The portion of the FWS to be constructed in accordance with ASME Code, Section III (Reference 10.4-8), Class 2 requirements allows access to welds and uses removable insulation for inservice inspection, in accordance with ASME Code, Section XI (Reference 10.4-12). The portion of the FWS to be constructed in accordance with ASME Code, Section III (Reference 10.4-8), Class 3 requirements is also designed and configured to accommodate inservice inspection in accordance with ASME Code, Section XI (Reference 10.4-12).

The control functions and power supplies are described in Chapters 7 and 8, respectively.

For a feedwater line break (FLB) or main steam line break (MSLB), the FWS is designed to limit high energy fluid from the break. A high energy line break for piping is discussed in Section 3.6.

Table 10.4.7-3 Condensate and Feedwater System Failure Modes and Effects Analysis

	Component	Failure Mode	Plant Condition	Effect on System Operation	Failure Detection
1.	Main Feedwater Isolation Valve (MFIV) NFS-VLV-512A,B,C,D normally open	Fails closed or fails to open on demand.	During power operation	No safety-related effect causes since: No adverse effect on integrities of the reactor or RCPB. Plant can remain in hot standby condition or go to cold shutdown condition.	Valve position Indication on the main control room
		Solenoid valve for actuating MFIV fails to open on demand.	Excessive Feedwater Flow Steam System Piping Failure Steam Generator Tube Rupture Loss of Coolant Accident	No safety-related effect causes since: Main Feedwater Isolation Valve is operated by a separate solenoid valves with redundancy and different class 1E power bus. Failure of either train of solenoid valves does not impair isolation function of Main Feedwater Isolation Valve.	Valve testing Valve testing is done in accordance with the Inservice Testing Program. If there are any problems with the solenoid valve, the failure is detected during the testig.
2.	Main Feedwater Regulation Valve (MFRV) NFS-FCV-460,470,480,490 Normally adjusted to open	Fails open fully on demand	During power operation	No safety-related effect causes since: No adverse effect on integrities of the reactor or RCPB. Plant can remain in hot standby condition or go to cold shutdown condition.	Valve position Indication on the main control room

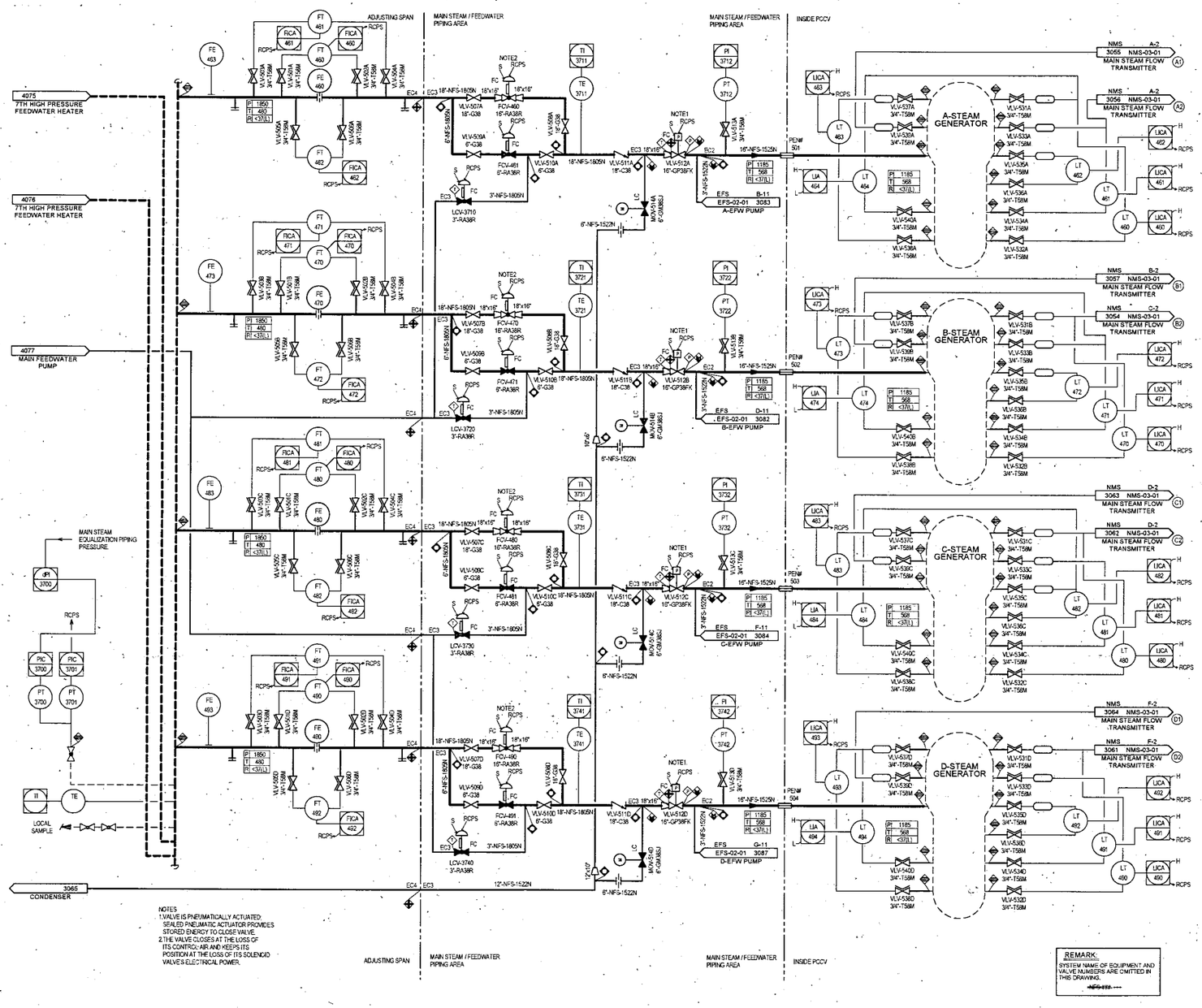

Figure 10.4.7-1 Condensate and Feedwater System Piping and Instrumentation Diagram (1/4)

- The safety-related portion of the system is designed such that a single failure in the SGBDS will not result in:

  - Loss of integrity of other blowdown lines

  - Loss of the capability of the emergency core cooling system (ECCS) to effect a safe reactor shutdown

  - Transmission of excessive loading to the containment pressure boundary

10.4.8.1.2 Non-safety Power Generation Design Bases

The SGBDS draws water from the secondary side of each steam generator as required to:

- Assist in controlling secondary side water chemistry during normal plant operation, plant start up operation and abnormal water chemistry conditions at rated power operation.

- Continuously remove impurities including radioactive impurities, if present, from the steam generator bulk water and purify the blowdown water.

- Sample blowdown water for chemistry analysis and detect primary-to-secondary leakage with SG blowdown water radiation monitor.

- Cooldown the steam generator for inspection and maintenance.

- Establish and maintain steam generator wet layup conditions during plant shutdown periods.

- Drain the secondary side of the steam generator for maintenance.

- Monitor the concentration of radioactive material in the processed blowdown water with SG blowdown return water radiation monitor downstream of blowdown demineralizers.

- Discharge secondary side water to waste water system (WWS) or liquid waste management system (LWMS) by bypassing normal processing equipment if secondary water chemistry becomes abnormal water conditions.

- Divert from the blowdown demineralizers to WWS or the condenser if the blowdown water temperature exceeds the predetermined temperature to protect demineralizers resin.

10.4.8.2 System Description

10.4.8.2.1 General Description

The SGBDS flow diagrams are shown in Figures 10.4.8-1 and 10.4.8-2. Classification of equipment and components in the SGBDS is provided in Section 3.2.

The SGBDS equipment and piping are located in the containment, the reactor building,

the auxiliary building and the turbine building (T/B).

The SGBDS consists of a flash tank, regenerative heat exchangers, non-regenerative coolers, filters, demineralizers, piping, valves and instrumentation. The flash tank, regenerative heat exchangers and non-regenerative coolers are provided to cool the blowdown water with heat recovery, while the filters and demineralizers are provided to purify the blowdown water.

One blowdown line per steam generator is provided. The blowdown from each steam generator flows independently to the flash tank. The blowdown water from the flash tank flows via one common line to regenerative heat exchangers and non regenerative coolers. Blowdown is split into two trains ahead of the heat exchangers. Common discharge from the coolers flows to the filters and demineralizers, where the flow is split into two trains. The purified water from the demineralizers flows to the condenser via a common discharge line.

The blowdown line from each steam generator is provided with two flow paths, a line for purifying blowdown water used during normal plant operation and a line for discharging the blowdown water to the WWS or the condenser used during startup and abnormal water chemistry conditions.

The blowdown water is drawn from a location above the tube sheet of each steam generator where impurities are expected to accumulate. The blowdown from each steam generator is depressurized by a throttle valve located downstream of the isolation valves. The throttle valves can be manually adjusted to control the blowdown rate.

The depressurized blowdown water flows to the flash tank, where water and flashing vapor are separated. The vapor is diverted to deaerator and the water is transferred to regenerative and non-regenerative heat exchangers for further cooling. During plant startup when the pressure in the flash tank is low, the vapor is diverted to condenser. The condensate and feedwater system (CFS) provides the condensate in regenerative heat exchanger(s) to recover thermal energy.

The turbine component cooling water system (TCS) cools blowdown water in the non-regenerative heat exchanger to protect the demineralizer resin prior to purifying the blowdown water. The impurities from the cooled blowdown water are removed by the inlet filters, demineralizers and outlet strainers. SG blowdown demineralizers consist of two cation demineralizers and two mixed bed demineralizers. The purified water is returned to the condenser.

A local grab sample point which is provided downstream of each demineralizers, a radiation monitor downstream of demineralizers outlet strainers and a radiation monitor in the sample line measures impurities concentration and the radioactivity level in the blowdown water. In case of SG tube leakage and when abnormally high radiation level is detected, the blowdown lines are isolated and the blowdown water included in SGBDS is transferred to waste holdup tank in the liquid waste management system (LWMS). See Subsection 11.2.2 for details.

Regenerative heat exchangers and non-regenerative coolers consist of two 50 %

capacity trains. When blowdown flow rate is less than 0.5% Maximum Steaming Rate (MSR) at rated power, one regenerative heat exchanger and one non-regenerative cooler are in operation while the other regenerative heat exchanger and non-regenerative cooler can remain on standby or isolated for maintenance.

Demineralizers include two 100% trains. Each demineralizer train includes cation demineralizer and mix bed demineralizer.

Furthermore filters are installed upstream these demineralizers and strainers are also installed downstream these demineralizers in this SG blowdown line.

During plant startup, blowdown rate is up to approximately 3% of MSR at rated power. In this mode, blowdown liquid flows to the WWS prior to discharge or to the condenser for processing in the Condensate Polishing System (CPS). During normal operation, blowdown rate is approximately 0.5 to 1% of MSR at rated power. At the 1% of MSR at rated power blowdown rate, both cooling trains are used.

With abnormal water chemistry, the flow of blowdown rate is up to approximately 3% of MSR at rated power and is directed to the WWS for processing prior to discharging to the environment.

A blowdown sample line from each steam generator is provided for sampling. A SG blowdown sample cooler is located in each of these lines for cooling blowdown liquid to reduce blowdown temperature suitable for the secondary water quality monitoring station. Cooled liquid flows to secondary water quality monitoring station, SG blowdown water radiation monitor and sample sink for taking grab samples if an SG tube leak occurs.

A secondary water quality monitoring station measures pH, specific conductivity, cation conductivity, sulfate ion, chloride ion and sodium ion concentrations. The SG blowdown water radiation monitor is continuously utilized for SG tube leak detection.

Two isolation valves on each blowdown line are located in the main steam/feedwater piping area. The SG blowdown water is transferred through each SG blowdown line under normal operating and transient conditions. The isolation valves close automatically upon receipt of one of the following signals:

- High radiation signal from SG blowdown return water radiation monitor
- High-high radiation signal from SG blowdown water radiation monitor
- High-high radiation signal from condenser vacuum pump exhaust line radiation monitor
- Emergency feedwater pump automatic actuation signal
- High water level in the blowdown flash tank
- High pressure in the blowdown flash tank

In addition, the containment isolation valve closes automatically upon receipt of

condenser hotwell. After the initiation of purification in the SG blowdown demineralizers, all condensate water bypasses CPS.

The radioactive spent resins are transferred to solid waste management system (SWMS) for disposal, when SG tube leakage exceeds allowable limits and resins are non recyclable. During normal operation without SG tube leakage, non-radioactive spent resins are transferred to a non-radioactive spent resin holding vessel (SRHV) in CPS. These resins are shipped to an off-site facility for regeneration.

10.4.8.2.2.3 Plant Shutdown

In this mode, the reactor is brought from no-load power operating temperature and pressure to a cold shutdown.

High blowdown rates (up to 3% MSR at rated power) may be used to reduce the solids contents in the steam generators and maintain secondary water chemistry within allowable limits. The blowdown water is returned to the condenser or to the WWS.

10.4.8.2.2.4 Steam Generator Drain

The SGBDS is used to drain the steam generators. In this mode, the blowdown drain water is directed to the condenser or to the WWS. The COL Applicant is to describe the nitrogen or equivalent system design for Steam Generator drain.

10.4.8.2.2.5 Abnormal Operation

(1) Condenser Tube leakage

SG blowdown water can be purified by the SG blowdown demineralizers or diverted directly to the condenser.

(2) SG blowdown lines isolation signals

When SG blowdown line isolation signals are generated, SG blowdown lines are isolated. Following recovery from this event, SG blowdown water is initially routed directly to the condenser and when the blowdown water quality is acceptable, SG blowdown demineralizers start purifying the blowdown water.

(3) Abnormal water chemistry condition

When the impurities concentrations at the outlet of the SG blowdown demineralizers increase beyond the predetermined limit, blowdown water is diverted to the condenser of to the WWS.

(4) Malfunction in SGBDS

SGBDS lines are automatically isolated, in the case of a malfunction of regenerative heat exchangers, non-regenerative coolers, flash tank vent line and the detection of one of the following conditions:

- The outlet temperature of Non-regenerative coolers is equal to or higher than the predetermined set point.

- High Pressure in the SG blowdown flash tank

- High-high water level in the SG blowdown flash tank

In these cases, the blowdown water is diverted to the condenser and the CPS is placed in operation, as required.

Similarly when high pressure or an abnormally high water level is detected in the deaerator, the SG blowdown water is diverted without purifying to the condenser and the CPS is placed in operation, as required.

After the condition is restored, the SGBDS is placed in service.

(5) SG Tube Leakage

In the case of primary to secondary SG tube leakage within allowable tube leak rate, as specified in the plant technical specifications, blowdown water continues to be purified with SG blowdown demineralizers to remove the radioactivity entering from leaking SG tube(s).

To minimize the contaminated radioactive spent resin, the secondary water is switched to low pH AVT operation. Spent resin is transferred to SWMS for disposal.

When the SG tube leak exceeds the allowable limits, the SG blowdown lines are automatically isolated upstream of the SG blowdown demineralizers by the SG blowdown return water radiation monitor high signal.

10.4.8.2.3 Component Description

Component design parameters are provided in Table 10.4.8-1.

(1) SG blowdown Flash Tank

SG blowdown flash tank is located in the T/B. During normal operation, maximum 1% MSR at rated power blowdown water is separated into flashing vapor and saturated liquid in this tank by lowering pressure and temperature in this tank.

(2) SG blowdown regenerative heat exchangers

SG blowdown regenerative heat exchangers are located in the T/B. Two-50 percent capacity blowdown regenerative heat exchanger trains are provided. Blowdown water from the flash tank is cooled in the regenerative heat exchanger(s) by the the condensate from the CFS to recover thermal energy from the blowdown water. The heated condensate is discharged into the deaerator.

Table 10.4.8-1 Steam Generator Blowdown System Major Component Design Parameters (Sheet 1of 3)

SG blowdown flash tank

Type	Vertical cylindrical
Number of tanks	1
Capacity (ft^3)	300
Design flow rate (lb/hr)	202,000 (1% of MSR at rated power)
Design pressure (psig)	300
Design temperature (°F)	410
Materials of construction	Stainless steel

SG blowdown regenerative heat exchangers (per heat exchanger)

Type	Shell and tube	
Number of exchangers	2	
Design heat duty (Btu/hr)	17.6×10^6	
Operating conditions	Tube side	Shell side
Fluid	SG blowdown water	Condensate
Operating temperature- In (°F)	375	129
- Out (°F)	158	365
Design flow rate (lb/hr)	79.4×10^3	73.5×10^3
Design pressure (psig)	300	560
Design temperature (°F)	410	410
Materials of construction	Stainless steel	Carbon steel

SG blowdown non-regenerative coolers (per cooler)

Type	Shell and Tube	
Number of coolers	2	
Design heat duty (Btu/hr)	3.57×10^6	
Operating conditions	Tube side	Shell side
Fluid	SG Blowdown Water	TCS
Operating temperature - In (°F)	158	100
- Out (°F)	113	109
Design flow rate (lb/hr)	79.4×10^3	397×10^3
Design pressure (psig)	300	200
Design temperature (°F)	200	200
Materials of construction	Stainless steel	Carbon steel

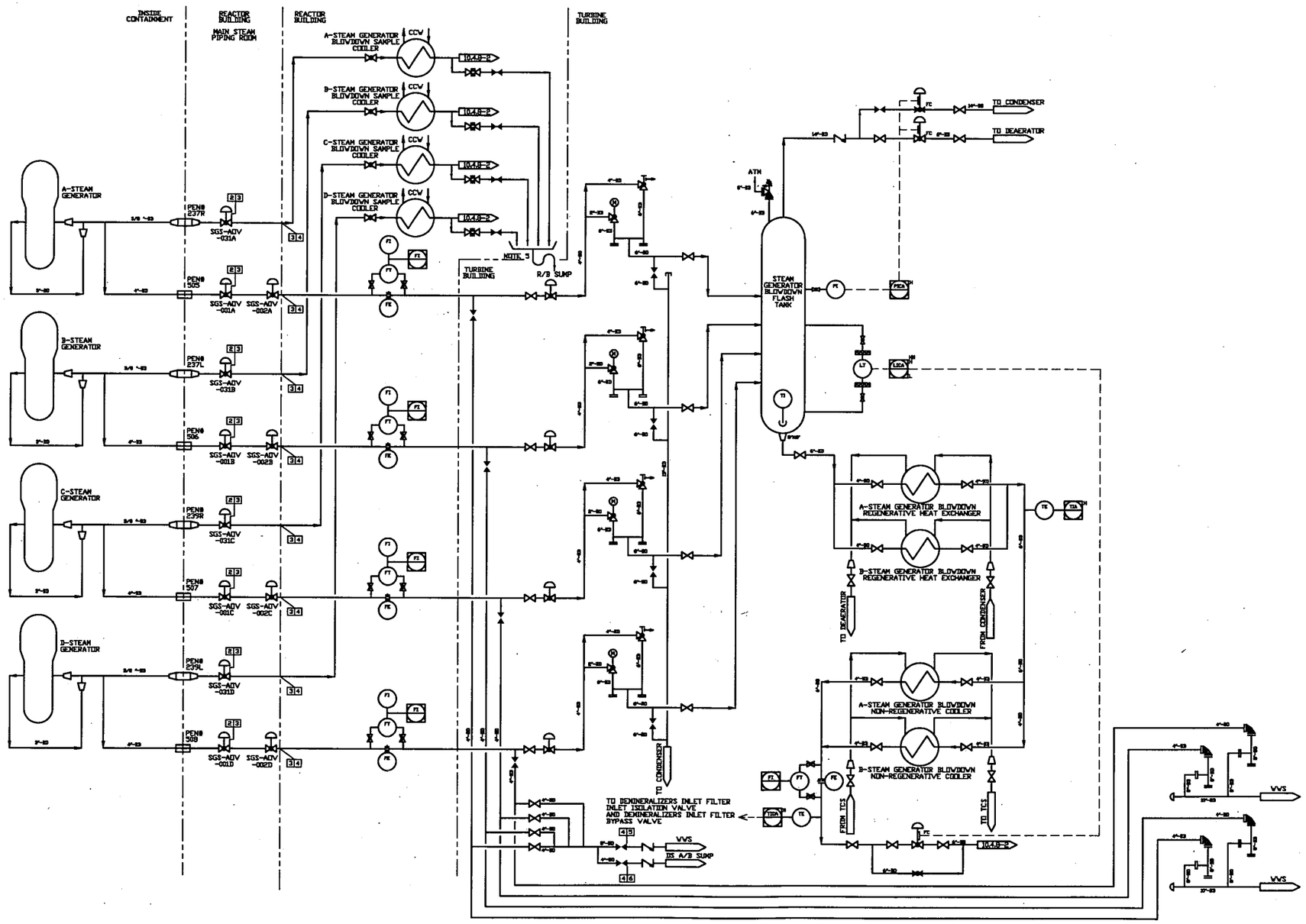

Figure 10.4.8-1 Steam Generator Blowdown System Piping and Instrumentation Diagram (1/2)

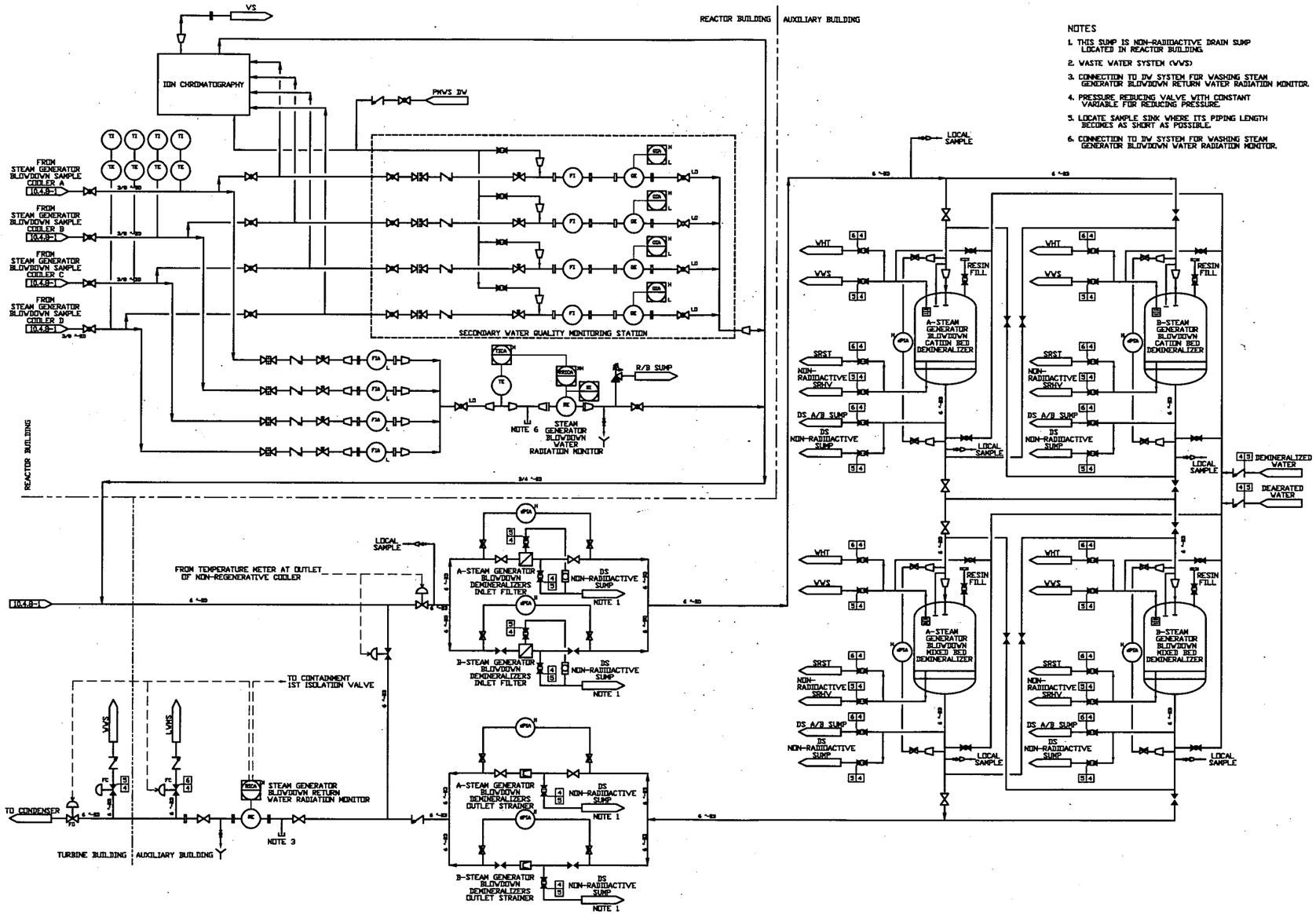

Figure 10.4.8-2 Steam Generator Blowdown System Piping and Instrumentation Diagram (2/2)

Table 10.4.9-1 Emergency Feedwater System Component Design Parameters (Sheet 1 of 3)

Motor-Driven Emergency Feedwater Pump

Number of pumps	2
Type	Horizontal, centrifugal
Capacity (gpm)	450 (including minimum flow rate)
Total dynamic head (ft)	3,200
Minimum flow rate (gpm)	50
NPSH available maximum operating flow (ft)	approx. 97
Material Impeller Casing Shaft	 Stainless steel Stainless steel Stainless steel
Equipment Class	3
Design Code	ASME Section III, Class 3
Seismic Category	I
Motor Horse Power rpm Power Supply Design Code	 800 3,600 6.9kV, 60Hz, 3 phase, Class 1E NEMA

Table 10.4.9-1 Emergency Feedwater System Component Design Parameters (Sheet 2 of 3)

Turbine-Driven Emergency Feedwater Pump

Number of pumps	2
Type	Horizontal, centrifugal
Capacity (gpm)	550 (including minimum flowrate)
Total Dymamic Head (feet)	3,200
Minimum Flowrate (gpm)	150
NPSH available maximum operating flow (ft)	approx. 100
Material Impeller Casing Shaft	 Stainless steel Stainless steel Stainless steel
Equipment Class	3
Design Code	ASME Section III, Class 3
Seismic Category	I

Table 10.4.9-1 Emergency Feedwater System Component Design Parameters (Sheet 3 of 3)

Emergency Feedwater Pit (per pit)

Number of pits	2
Pit inside dimensions, L(ft)×W(ft)×H(ft)	28 x 42 x 35
Usable volume (gallons)	204,850
Required volume (gallons)	186,200
Seismic Category	I

Emergency Feedwater Control Valves

Number of valves	4
Type	Globe valve
Size (inches)	3
Design pressure (psig)	2,135
Design temperature (°F)	105
Material	Carbon steel
Design Code	ASME Section III, Class 3
Equipment Class	3
Seismic Category	I

Emergency Feedwater Isolation Valves

Number of valves	4
Type	Gate valve
Size (inch)	3
Design pressure (psig)	2,135
Design temperature (°F)	568
Material	Carbon steel
Design Code	ASME Section III, Class 3
Equipment Class	2
Seismic Category	I

Table 10.4.9-2 Steam Generator Makeup Flow Requirement

Event	Flow requirement
Feedwater line break	705 (gpm) to 2 SGs.

Table 10.4.9-4 Emergency Feedwater System Failure Modes and Effects Analysis (FMEA) (Sheet 1 of 3)

Components	Failure Mode	Plant Condition	Effect on System Operation	Failure Detection	Remarks
1. **Emergency Feedwater Pump** EFS-RPP-001A, D(Turbine-driben) EFS-RPP-001B, C(Motor-driven) Normally stopped	Failure to start on demand	Loss of Non-emergency AC power Loss of Nominal Feedwater Small Break Loss of Coolant Accident Safe Shutdown	**No effect on safety-related function since:** The three remaining EFW pumps are sufficient for providing EFW to three SGs.	EFW pump operating information: Flow, discharge pressure and pump motor current in MCR Circuit breaker close position light in MCR	The left columns describe the non-OLM case where the EFWS is separated into four trains (EFW pump discharge tie line is closed). For OLM: No effect on safety-related function since at least two pumps are available to operate and at least three SGs can be supplied with EFW by opening the EFW pump discharge tie line during all modes of plant operation assuming that one pump is not available due to maintenance.
		Feedwater System Pipe Break Steam Generator Tube Rupture Safe Shutdown	**No effect on safety-related function since:** Each EFW line is provided with redundant isolation valves that automatically close to isolate the affected SG. This permits the EFW supply to be provided to the three intact SGs by three pumps following the event. In addition, two pumps are available for supplying EFW to the two intact SGs assuming one pump failure.	EFW pump operating information: Flow, discharge pressure and pump motor current in MCR Circuit breaker close position light in MCR	

Table 10.4.9-4 Emergency Feedwater System Failure Modes and Effects Analysis (FMEA) (Sheet 2 of 3)

Components	Failure Mode	Plant Condition	Effect on System Operation	Failure Detection	Remarks
2. **T/D-EFW pump actuation valve** EFS-MOV-103A, D normally closed, dc MOVs	Failure to open on demand	Loss of Non-emergency AC power Loss of Nominal Feedwater Small Break Loss of Coolant Accident Safe Shutdown	**No effect on safety-related function since:** The three remaining EFW pumps are sufficient for providing EFW to three SGs.	Valve information: Valve open/close position indication in MCR	The left columns describe the non-OLM case where the EFWS is separated into four trains (EFW pump discharge tie line is closed). For OLM: No effect on safety-related function since at least two pumps are available to operate and at least three SGs can be supplied with EFW by opening the EFW pump discharge tie line during all modes of plant operation assuming that one pump is not available due to maintenance.
		Feedwater System Pipe Break Steam Generator Tube Rupture Safe Shutdown	**No effect on safety-related function since:** Each EFW line is provided with redundant isolation valves that automatically close to isolate the affected SG. This permits the EFW supply to be provided to the three intact SGs by three pumps following the event. In addition, two pumps are available for supplying EFW to the two intact SGs assuming one T/D-EFW pump actuation valve failure.	Valve information: Valve open/close position indication in MCR	
3. **EFW control valve** EFS-MOV-017A, B,C,D normally opened, dc MOVs	Failure to close on demand	Inadvertent secondary depressurization Feedwater System Pipe Break Steam System Piping Failure Steam Generator Tube Rupture	**No effect on safety-related function since:** The series of this control valves and the isolation valves (EFS-MOV-019A,B,C,D) with redundancy can stop EFW supply to the affected SG (automatically closes upon receipt of signals).	Valve information: Valve open/close position indication in MCR	

Table 10.4.9-4 Emergency Feedwater System Failure Modes and Effects Analysis (FMEA) (Sheet 3 of 3)

Components	Failure Mode	Plant Condition	Effect on System Operation	Failure Detection	Remarks
4. **EFW isolation valve** EFS-MOV-019A, B,C,D normally opened, dc MOVs These valves are normally positioned to limit the maximum EFW flow	Failure to close on demand	Inadvertent secondary depressurization Feedwater System Pipe Break Steam System Piping Failure Steam Generator Tube Rupture	**No effect on safety-related function since:** The series of this isolation valves and the control valves (EFS-MOV-017A,B,C,D) with redundancy can stop EFW supply to the affected SG (automatically closes upon receipt of signals).	Valve information: Valve open/close position indication in MCR	
5. **T/D-EFW pump main steam line steam isolation valve** EFS-MOV-101A, B,C,D normally opened, dc MOVs	Failure to close on demand	Loss of Coolant Accident	**No effect on safety-related function since:** Containment boundary remains intact with redundancy provided by this valve, SGs and main steam lines.	Valve information: Valve open/close position indication in MCR	
	Failure to close on demand	Steam Generator Tube Rupture	**No effect on safety-related function since:** Isolation of affected SG is achieved by redundant T/D-EFW pump actuation valves (EFS-MOV-103A,D).	Valve information: Valve open/close position indication in MCR	

Table 10.4.9-5 Emergency Feedwater System Summary of Indication and Controls

Indication

Parameter	Main control board and remote shutdown console
EFW pump discharge pressure	Y
EFW pump discharge flow	Y
EFW isolation/control valve position	Y
Turbine-driven EFW pump main steam line isolation valve position	Y
Turbine-driven EFW pump actuation valve position	Y
EFW pump discharge tie line isolation valve position	Y
EFW pit level	Y
Motor-driven EFW pump run status	Y
EFW pit level alarms	Y
EFW pump discharge line temperature alarm	Y

Note: Y = Yes

Control

Motor-driven EFW pumps	Y
Turbine-driven EFW pumps	Y
EFW isolation/control valves	Y

Note: Y = Yes

Table 10.4.9-6 Emergency Feedwater System Electric Power Sources

Component	Component Number	Electric Train
A-Emergency feedwater pump (turbine-driven, for inside electrical components)	EFS-RPP-001A	Class 1E dc bus "A"
B-Emergency feedwater pump (motor-driven)	EFS-RPP-001B	Class 1E ac bus "B"
C-Emergency feedwater pump (motor-driven)	EFS-RPP-001C	Class 1E ac bus "C"
D-Emergency feedwater pump (turbine-driven, for inside electrical components)	EFS-RPP-001D	Class 1E dc bus "D"
A-Emergency feedwater control valve	EFS-MOV-017A	Class 1E dc bus "A"
B-Emergency feedwater control valve	EFS-MOV-017B	Class 1E dc bus "B"
C-Emergency feedwater control valve	EFS-MOV-017C	Class 1E dc bus "C"
D-Emergency feedwater control valve	EFS-MOV-017D	Class 1E dc bus "D"
A-Emergency feedwater isolation valve	EFS-MOV-019A	Class 1E dc bus "B"
B-Emergency feedwater isolation valve	EFS-MOV-019B	Class 1E dc bus "A"
C-Emergency feedwater isolation valve	EFS-MOV-019C	Class 1E dc bus "D"
D-Emergency feedwater isolation valve	EFS-MOV-019D	Class 1E dc bus "C"
A-Emergency feedwater pump (turbine-driven) actuation valve	EFS-MOV-103A	Class 1E dc bus "A"
A-Emergency feedwater pump (turbine-driven) A-main steam line steam isolation valve	EFS-MOV-101A	Class 1E dc bus "A"
A-Emergency feedwater pump (turbine-driven) B-main steam line steam isolation valve	EFS-MOV-101B	Class 1E dc bus "A"
D-Emergency feedwater pump (turbine-driven) actuation valve	EFS-MOV-103D	Class 1E dc bus "D"
D-Emergency feedwater pump (turbine-driven) C-main steam line steam isolation valve	EFS-MOV-101C	Class 1E dc bus "D"
D-Emergency feedwater pump (turbine-driven) D-main steam line steam isolation valve	EFS-MOV-101D	Class 1E dc bus "D"

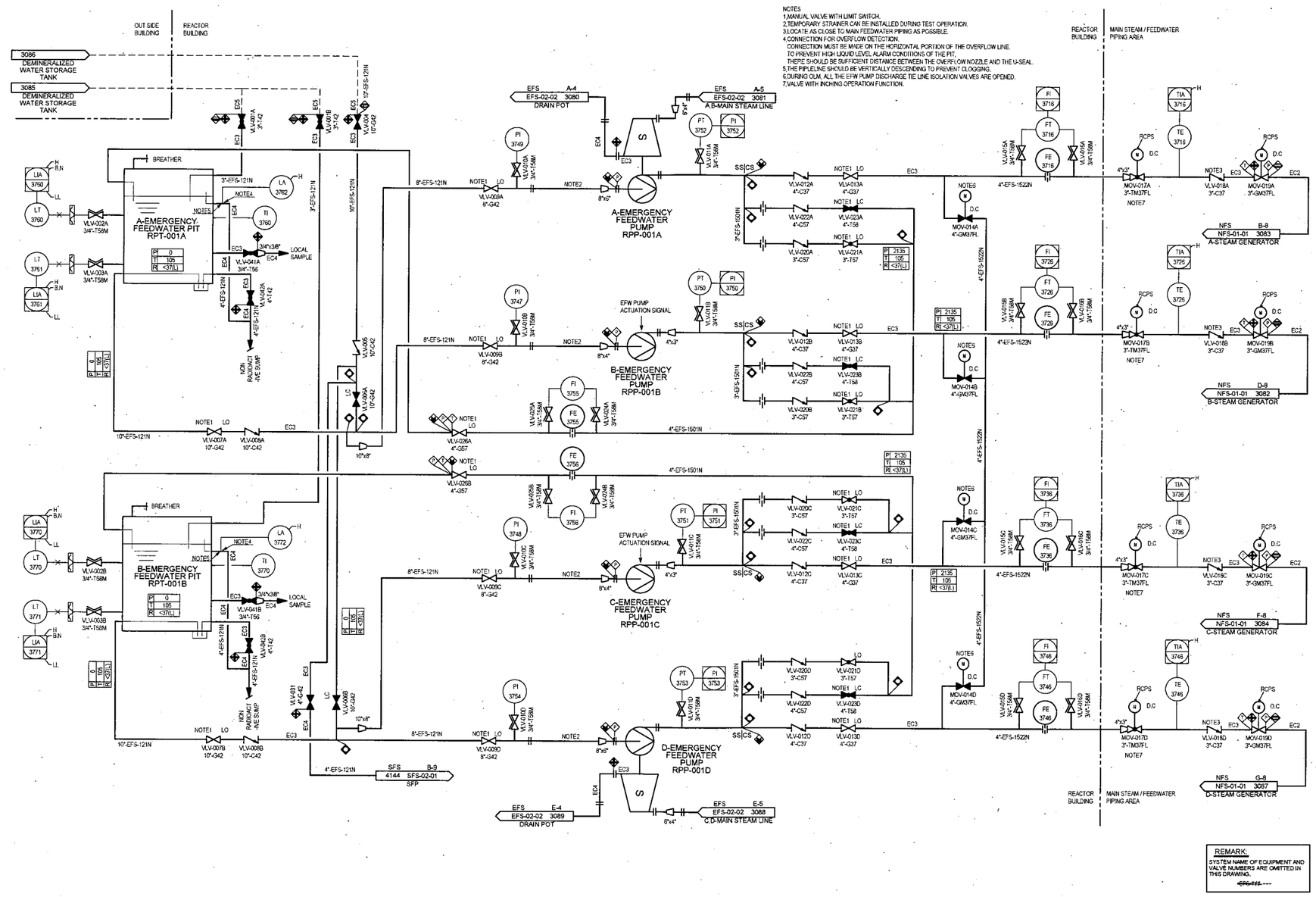

Figure 10.4.9-1 Emergency Feedwater System Piping and Instrumentation Diagram (1/2)

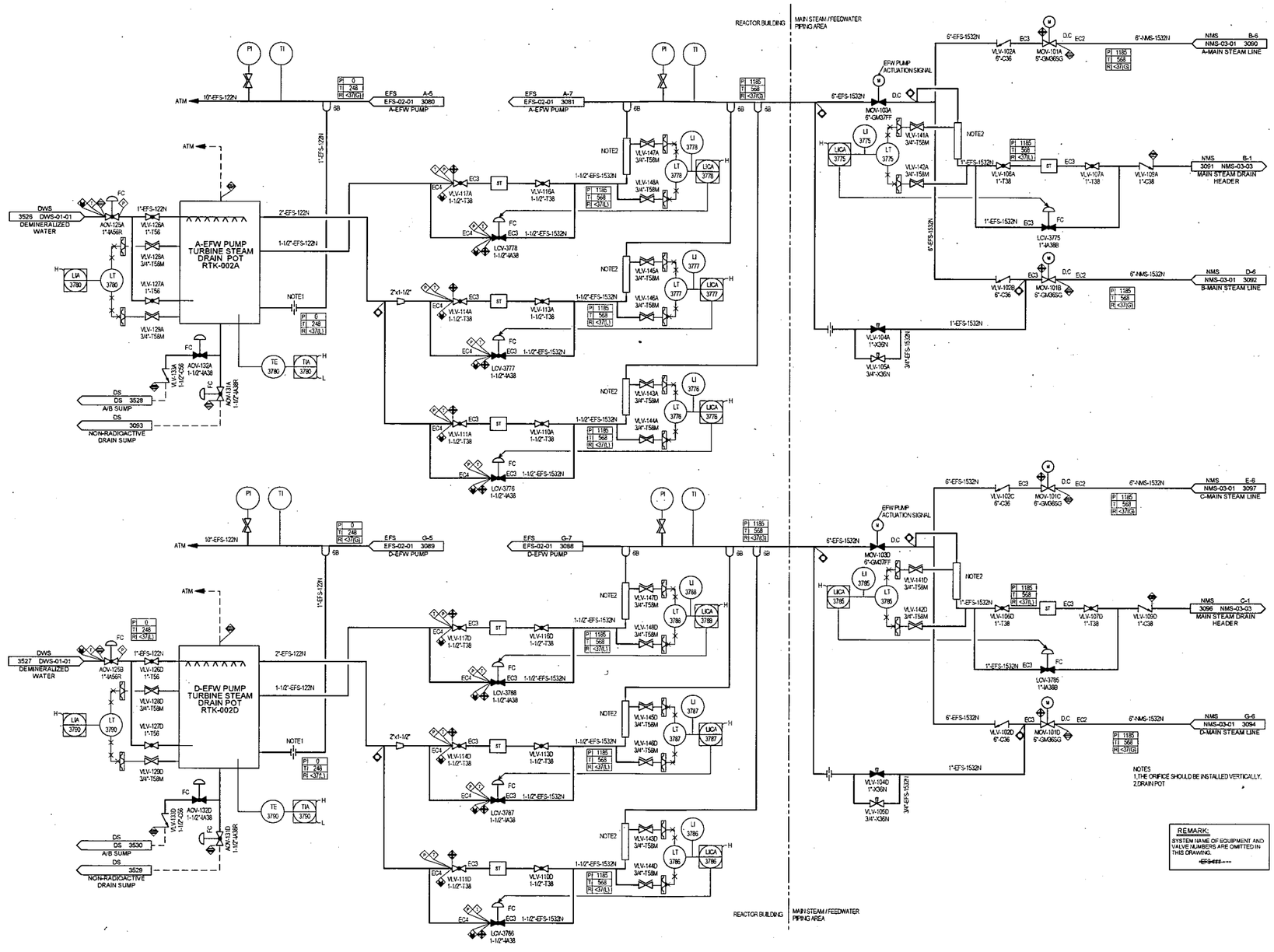

Figure 10.4.9-2 Emergency Feedwater System Piping and Instrumentation Diagram (2/2)

10.4.10 Secondary Side Chemical Injection System

The secondary side chemical injection system (SCIS) feeds required chemicals to control pH and dissolved oxygen content of the feedwater, condensate and steam generator secondary side water. Alkaline pH is maintained in the secondary side with pH controller injection and dissolved oxygen is removed (scavenged) by oxygen scavenger injection.

The SCIS uses the above mentioned high all volatile chemical treatment to prevent corrosion in the secondary loop. The deaerator (Subsection 10.4.7), the condensate polishing system (Subsection 10.4.6), the steam generator blowdown system (Subsection 10.4.8) and the secondary side sampling system (Subsection 9.3.2) also contribute to secondary side water chemistry control.

During continuous operation, chemicals are injected by the SCIS pumps to two addition points: (1) downstream of the condensate polisher and (2) the deaerator.

For layup and clean up operation, pH controller and oxygen scavenger are injected by the SCIS layup pumps to the above two points and two additional points: (1) the steam generator makeup line and (2) the condenser makeup line.

The SCIS includes the chemical addition tanks, injection pumps, bulk chemical system, piping and instrumentation. Figure 10.4.10-1 shows the SCIS Flow Diagram. Table 10.4.10-1 shows design parameters of the SCIS major equipment. The sampling system related to the SCIS is covered in Subsection 9.3.2.

10.4.10.1 Design Bases

10.4.10.1.1 Safety Design Basis

The SCIS does not have a safety-related function and has no safety design basis.

10.4.10.1.2 Non safety Power Generation Design Basis

The secondary side chemical injection system is designed to maintain a noncorrosive condition within the secondary loop. A noncorrosive condition is maintained by controlling pH and dissolved oxygen content in the secondary side: (a) by maintaining alkaline pH with pH controller injection and (b) by scavenging dissolved oxygen with oxygen scavenger injection.

During continuous operation, pH controller is injected into the secondary side to maintain a pH of 9.2 or more. Oxygen scavenger is injected to maintain a residual level of oxygen scavenger. Table 10.4.10-2 shows the approximate concentrations of pH controller and oxygen scavenger that are maintained in the secondary side during different operating modes of the power plant. Secondary water chemistry specifications for US-APWR is followed for all operations including wet layup as described in Subsection 10.3.5.

10.4.10.2 System Description

10.4.10.2.1 General Description

The chemical injection system is shown in Figure 10.4.10-1.

The chemical injection system consists of bulk chemical subsystem and two chemical injection sub-systems: One for pH controller injection for pH control, and the other for oxygen scavenger injection for oxygen removal (scavenging). Each chemical injection subsystem consists of an agitated chemical addition tanks and injection pumps. The SCIS is capable of independently injecting controlled amounts of pH controller and oxygen scavenger.

During continuous operation, dilute pH controller and oxygen scavenger solutions are injected by the injection pumps to two addition points: (1) downstream of the condensate polisher and (2) the deaerator.

Volatile chemicals are mainly depleted in the main condenser. These chemicals are replenished by injecting fresh chemicals into the discharge side of the CPS, at the first injection point.

Some volatile chemicals are also depleted in the deaerator. These depleted chemicals are replenished by injecting fresh chemicals to deaerator, the second injection point. The second injection point is also the final adjustment/control point for the water chemistry of the steam generator feedwater and bulk water.

For layup, dilute pH controller and oxygen scavenger solutions are injected by the layup pumps to four points: (1) downstream of the condensate polisher, (2) the deaerator, (3) the steam generator makeup line and (4) the condenser makeup line.

During wet layup, pH controller and oxygen scavenger are needed to adjust the pH of the water in the secondary side. Typical plant practice during layup is to "soak" the steam generators with chemically treated water to remove "hideout' contaminants and oxygen, and also to use a feed and bleed or a drain and refill method to reduce impurity levels from the secondary side. The goal for layup is to maintain water purity to prevent affecting normal operation.

The sampling system, which is covered in Subsection 9.3.2, is equipped with continuous analyzers to monitor and control the above and other water quality conditions before each chemical injection point. The sampling system analyzers send data inputs to the chemical injection pump stroke controllers which inject the proper amounts of chemicals. Also, grab sample points are provided for laboratory analysis of these parameters to maintain the continuous analyzers, and to assure that water quality is being maintained through proper amounts of chemical injection.

The SCIS has sufficient capacity for 24 hours of continuous chemical injection at normal feed rates, i.e., chemicals need to be replenished only once per day during normal operation.

The SCIS is controlled by automatic, semi-automatic, or manual mode. All of the SCIS components are located in the turbine building, except the bulk chemical system which is located outdoors.

10.4.10.2.2 Component Description

The SCIS major components are described below and Table 10.4.10-1 provides design parameters for all major SCIS equipment.

10.4.10.2.2.1 pH Controller Addition Tanks with Agitator

In the US-APWR, morpholine and dimethylamine are used as pH controllers during continuous operation. In addition, ammonia is used during layup. Each pH controller has one addition tank with an agitator. Each tank and the agitator are constructed of stainless steel. Dilute solution for each pH controller is prepared in the tank by mixing concentrated solution with demineralized water. Mixing is done by an agitator, which is mounted on the tank top. The addition tank receives concentrated solution from the bulk chemical system, normally once a day to replenish the batch.

Each addition tank has connections for chemical fill, demineralized water, pump suction, pump relief return, vent, drain and instrumentation.

10.4.10.2.2.2 Oxygen Scavenger Addition Tank with Agitator

In the US-APWR, hydrazine is used as oxygen scavenger. One agitated hydrazine addition tank is included in the SCIS. The tank and the agitator are constructed of stainless steel. Dilute hydrazine solution is prepared in the tank by mixing concentrated hydrazine solution with demineralized water. Mixing is done by the agitator, which is mounted on the tank top. The addition tank receives concentrated hydrazine from the bulk chemical system, normally once a day to replenish the batch.

The hydrazine addition tank has connections for chemical fill, demineralized water, pump suction, pump relief return, vent, drain and instrumentation.

10.4.10.2.2.3 pH Controller Injection Pumps for Continuous Operation

Three morpholine injection pumps and three dimethylamine injection pumps for continuous operation are provided in the SCIS. For each pH controller, one pump is dedicated to chemical addition downstream of the condensate polisher and one pump is dedicated to chemical addition to the deaerator. The third pump is a standby pump.

10.4.10.2.2.4 pH Controller Injection Pumps for Layup

For layup, one common injection pump for pH controllers is in included the SCIS.

For layup, each pH controller is injected by the layup pump to four points: (1) downstream of the CPS, (2) the deaerator, (3) the steam generator makeup line and (4) the condenser makeup line.

10.4.10.2.2.5 Oxygen Scavenger Injection Pumps for Continuous Operation

The SCIS includes three hydrazine injection pumps for continuous operation. One pump is dedicated to chemical addition downstream of the CPS and one pump is dedicated for chemical addition to the deaerator. The third pump is a standby pump.

10.4.10.2.2.6 Oxygen Scavenger Injection Pump for Layup

One hydrazine injection pump for layup is in the SCIS.

For layup, hydrazine is injected by the layup pump at four points: (1) downstream of the CPS, (2) the deaerator, (3) the steam generator makeup line and (4) the condenser makeup line.

10.4.10.2.2.7 Bulk Chemical System

The bulk chemical system includes one bulk chemical storage tank, two bulk chemical transfer pumps, and three portable drum pumps.

The bulk chemical storage tank is provided for storage of morpholine, and is constructed of 304 stainless steel, and has connections for chemical fill from a bulk chemical supply truck, pump suction, pump return, vent drain and instrumentation.

The bulk chemical transfer pumps are provided (one is a spare) for the transfer of morpholine from the bulk chemical storage tank to the chemical addition tank.

The portable drum pumps are provided for the dispensing of hydrazine, dimethylamine (DMA) and ammonia from chemical totes to the chemical addition tanks.

10.4.10.2.2.8 Piping, Valves and Instruments

The SCIS piping and valves are constructed of stainless steel. Piping, valves and in-line instruments located on the discharge side of the pumps are designed to withstand the maximum discharge pressure of the pumps. All SCIS major instruments are described in Subsection 10.4.10.5.

10.4.10.2.3 System Operation

The SCIS operation is described below under two operating modes: (1) continuous SCIS operation and (2) SCIS operation during layup. The SCIS feeds the required amounts of pH controller and oxygen scavenger to control the pH level and dissolved oxygen content of the steam condensate, feedwater and steam generator water during:

- Power operation
- Plant startup
- Cleanup
- Plant operation during condenser tube leak (an abnormal condition)

Table 10.4.10-2 shows the secondary side water chemistry that is maintained by the SCIS during the above operating modes. During power operation, as shown in Table 10.4.10-2, the CPS is not in use, i.e., is 100% by-passed. During plant startup, the above table shows that all condensate is treated through the CPS. When cleanup of the condensate is required, either prior to startup, after cold shutdown or due to any other

reason, 33% of the condensate is treated through the CPS. During condenser tube leak operation, all condensate is treated through the CPS.

Volatile chemicals (pH controller and oxygen scavenger) are mainly depleted in the main condenser and deaerator, and pH controller is removed by CPS and SGBD demineralizer. The depleted pH controller and oxygen scavenger are replenished by injecting fresh chemicals downstream of the CPS and to the dearator.

Bulk chemicals are transferred from the bulk chemical system to the chemical addition tanks. Dilute chemical solutions are prepared in the chemical addition tanks by mixing with demineralized water. Mixing is done by an agitator, which is mounted on the tank top.

10.4.10.2.3.1 Continuous Operation

During continuous operation, the SCIS operates two of three injection pumps for each pH controller. These pumps draw diluted pH controller solution from the addition tank. One pump is used for chemical addition to downstream of the CPS and a second pump is for chemical addition to the deaerator. The third pump is a standby pump.

The pH controller and oxygen scavenger injection pumps stroke is adjusted automatically based on the residual pH controller and oxygen scavenger concentration level inputs from the pH controller and oxygen scavenger analyzers, which are part of the sampling system.

The chemical addition tanks have level transmitters that display continuously the tank level, locally and at the control room. On a low level alarm, the operator initiates either automatic or manual preparation of a new batch. For automatic operation, adequate instrumentation is provided, which is programmed in the Digital Control System for preparation of dilute batch solution by adding controlled amounts of concentrated chemical and water in the chemical addition tank. Subsection 10.4.10.5, Instrumentation Applications, provides a detailed description of the instruments that are used to run the SCIS automatically. Preparation of the dilute solution can also be done by the operator manually or semi-automatically.

10.4.10.2.3.2 Layup

During layup, the chemical injection pump is under manual control to feed chemicals to the secondary side based on the results of grab samples.

One common injection pump for pH controllers is included in the SCIS. During wet layup, pH controllers are needed for pH adjustment of the water in the secondary side. Typical plant practice during layup is to "soak" the steam generators with chemically treated water to remove 'hideout' contaminants and oxygen, and also to use a feed and bleed or a drain and refill method to reduce impurity levels from the secondary side.

For layup, pH controllers are injected by the layup pump to four points: (1) downstream of the CPS, (2) the deaerator, (3) the steam generator makeup line and (4) the condenser makeup line. The pH controller layup pump and the oxygen savanger layup pump discussed below are interconnected to serve as spares for each other.

For layup, oxygen scavenger is injected by the layup pump to four points: (1) downstream of the CPS, (2) the deaerator, (3) the steam generator makeup line and (4) the condenser makeup line.

10.4.10.3 Safety Evaluation

Because the SCIS has no safety design basis, no safety evaluation is provided.

10.4.10.4 Tests and Inspections

All active components of the SCIS are accessible for inspection during plant operation. The SCIS is tested before plant startup in accordance with Chapter 14 requirements.

The performance along with structural and leak-tight integrity of all system components are demonstrated by continuous operation.

The SCIS injection pumps and instruments are calibrated and maintained periodically to ensure the proper functioning of all components.

10.4.10.5 Instrumentation Applications

The following instrumentation is provided for manual, semi-automatic and automatic control of the SCIS during all modes of plant operations except layup. Chemical injections during wet layup are manually controlled based on the analytical results of grab samples.

a. Chemical Addition Tanks Level Transmitters

Each chemical addition tank level is measured and indicated locally and in the main control room. On high-level alarm, influent line valves are closed automatically to prevent overfill. The level transmitter indications aid the operator in determine the proper amounts of chemicals and demineralized water to add to in the chemical addition tanks. On low level alarm from the transmitter, the operator is notified to prepare new batch, i.e., to add chemical and water to the addition tanks.

b. Chemical Addition Tanks Level Switches

Each chemical addition tank has high and low level switches. On low level alarm the injection pumps trip (shut down). On high level alarm, the common influent line valve on the tank top is closed automatically as a backup protection against overfill.

c. Demineralized Water Flow Indication and Totalizer

Demineralized water flow is measured and totalized. Water amounts and the bulk chemical amounts, measured by item (d) below instruments, are controlled to make necessary dilution of the bulk chemicals.

As mentioned before, the level indicating transmitters in the addition tanks provide additional data to help prepare the diluted chemical batches.

d. Bulk Chemicals Flow Indications and Totalizers

The amounts of concentrated pH controller and oxygen scavenger bulk chemical, added to each of the addition tanks, are measured and totalized. Data are shown locally and also transmitted to the indication in the main control room.

e. Chemical Injection Pumps Stroke Control

The pH controller injection pumps stroke is adjusted automatically based on pH level and conductivity data inputs from the pH and conductivity analyzers, which are part of the sampling system.

The oxygen scavenger injection pumps stroke is adjusted automatically based on the residual oxygen scavenger concentration inputs from the oxygen scavenger analyzers, which are part of the sampling system.

f. Automatic Valves for the SCIS

The SCIS contains a number of automatic on/off valves, as shown on the Figure 10.4.10-1, for its operation in an automatic, semi-automatic or manual mode. Each valve has a pneumatic operator, position indication and two (2) limit switches.

g. Chemical Injection Pumps Pressure Transmitters

Each chemical injection pump and bulk chemical transfer pump has a pressure indicating transmitter on the pump discharge side for local and remote indication of the pump discharge pressure. Pump discharge pressure monitoring is necessary for trouble shooting and pump maintenance.

h. Bulk Chemical Storage Tank Level Transmitter

The bulk chemical storage tank level is measured and indicated locally and in the main control room. On high-level alarm, influent line valve closes automatically to prevent overfill.

i. Bulk chemical Storage Tank Level Switches

The bulk chemical storage tank has a level switch low and a level switch high. On low-level alarm, the transfer pumps trips (shut down). On high-level alarm, the influent line valve on the tank top closes automatically as a protection against overfill.

Table 10.4.10-1 Major Equipment Design Parameters (Sheet 1of 3)

pH Controller Addition Tank with Agitator

Ammonia Addition Tank with Agitator	
Number of tanks	1
Type	Vertical
Materials	Stainless steel

Morpholine Addition Tank with Agitator	
Number of tanks	1
Type	Vertical

Dimetyleamine Addition Tank with Agitator	
Number of tanks	1
Type	Vertical

Oxygen Scavenger Addition Tank with Agitator

Hydrazine Addition Tank with Agitator	
Number of tanks	1
Type	Vertical
Materials	Stainless

Table 10.4.10-1 Major Equipment Design Parameters (Sheet 2of 3)

pH Controller Injection Pumps for Continuous Operation

Morpholine Injection Pumps for Continuous Operation	
Number of pumps	3
Type	Double diaphragm, simplex

Dimetylamine Injection Pumps for Continuous Operation	
Number of pumps	3
Type	Double diaphragm, simplex

Oxygen Scavenger Injection Pumps for Continuous Operation

Hydrazine Injection Pumps for Continuous Operation	
Number of pumps	3
Type	Double diaphragm, simplex

pH controllers common Injection Pump for Layup

Common Ammonia / Morpholine / DMA Injection Pump for Layup	
Number of pumps	1
Type	Double diaphragm, simplex

Oxygen Scavenger Injection Pump for Layup

Hydrazine Injection Pump for Layup	
Quantity	1
Type	Double diaphragm, simplex

Table 10.4.10-1 Major Equipment Design Parameters (Sheet 3of 3)

Bulk Chemical System

Morpholine Storage Tank	
Number of pumps	1
Type	API

Morpholine Transfer Pumps	
Number of pumps	2
Type	Double diaphragm, simplex

Table 10.4.10-2 Secondary Side Water Chemistry

Operating mode	CPS operation	Percent (%) of condensate flow thru CPS	Morpholine / DMA concentration in secondary side, (ppb)	Hydrazine concentration in secondary side, (ppb)
Power operation	Bypass CPS	0	35,000≤ / 800 — 1200	200
Condenser tube leak operation	CPS is in operation	100	35,000≤ / 800 — 1200	First 1 hr: 200 After 1 hr: 250
Cleanup	CPS is in operation	33	35,000≤ / 800 — 1200	250
Startup	CPS is in operation	33	35,000≤ / 800 — 1200	250

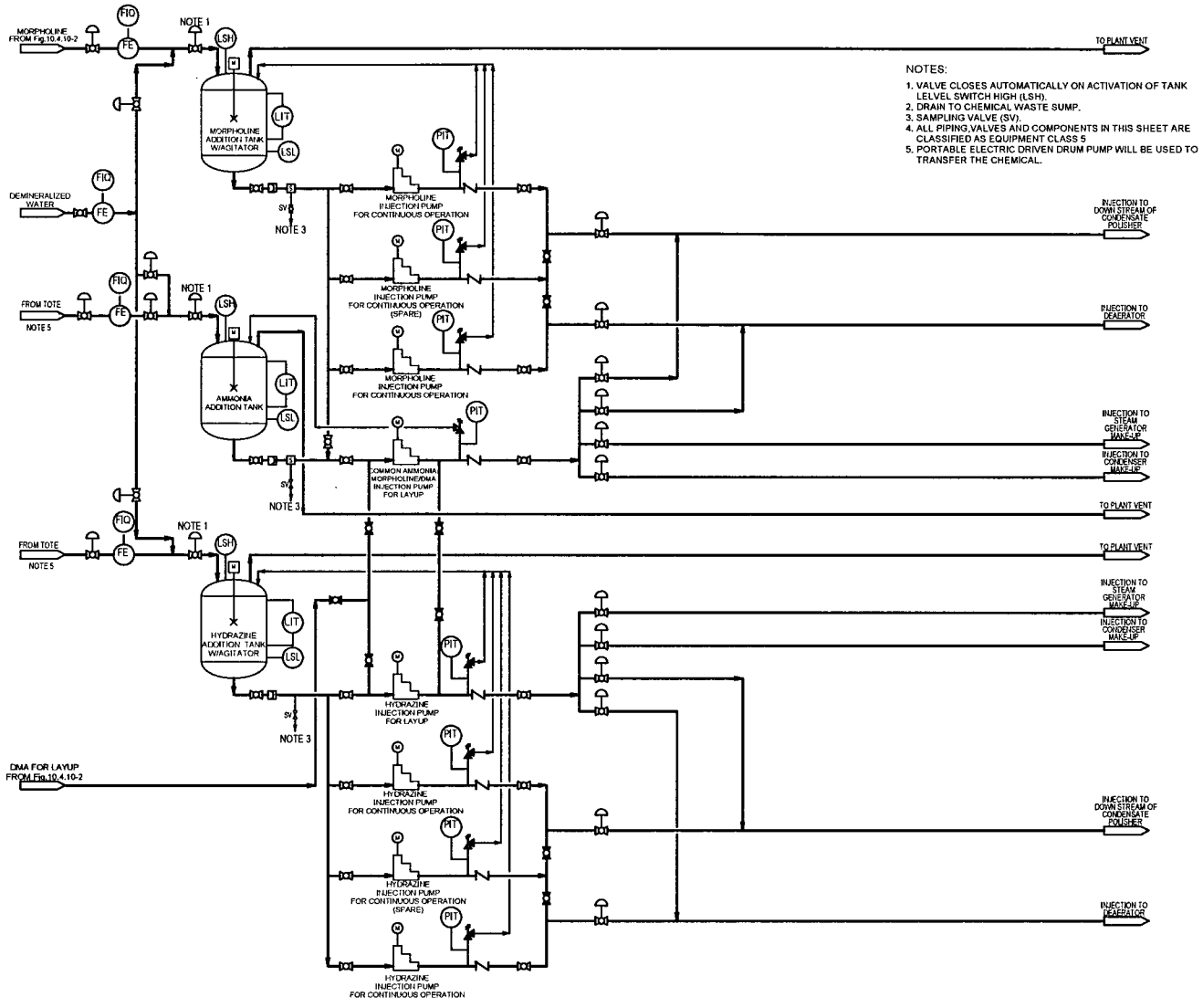

Figure 10.4.10-1 Secondary Side Chemical Injection System Piping and Instrumentation Diagram

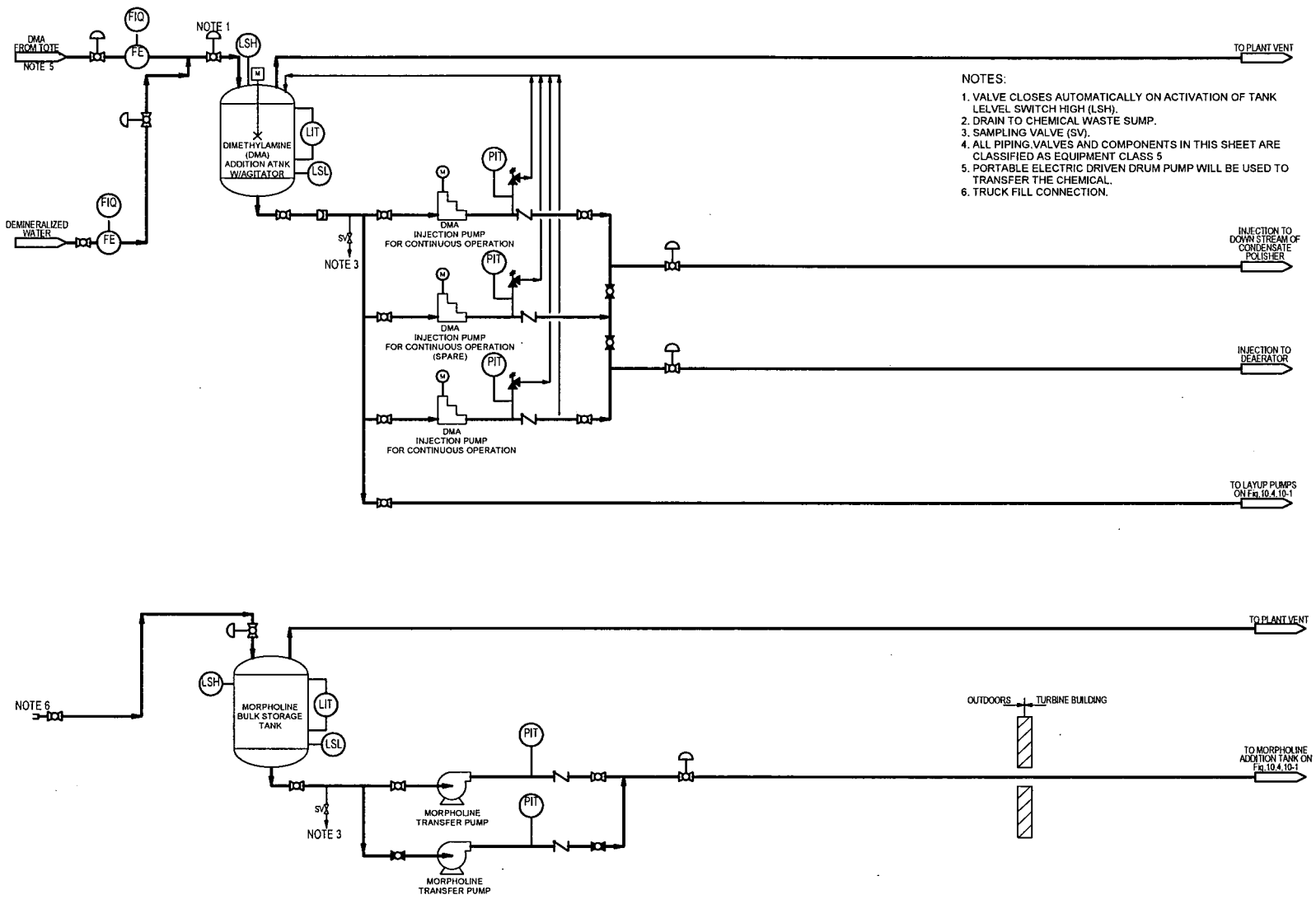

Figure 10.4.10-2 Secondary Side Chemical Injection System Piping and Instrumentation Diagram

10.4.11 Auxiliary Steam Supply System

The auxiliary steam supply system (ASSS) supplies the auxiliary steam required for plant use during plant startup, shutdown, and normal operation. Steam is supplied from either an auxiliary boiler, main steam or turbine extracting steam.

10.4.11.1 Design Bases

10.4.11.1.1 Safety Design Bases

The ASSS has no safety-related function and therefore has no nuclear safety design basis.

10.4.11.1.2 Power Generation Design Basis

The ASSS has the functions shown below:

- During plant normal operation, the ASSS supplies auxiliary steam to the components of primary system or HVAC system by taking the part of the main steam or turbine extracting steam. Then the system transfers the condensed water from these components to the condenser to use the water as the steam again.
- During plant startup, shutdown and plant regular inspections, main steam is not available; the auxiliary steam from the auxiliary boiler is supplied to the components of the primary system, HVAC system and secondary system. The condensed water from the primary or HVAC system components are collected to the auxiliary boiler and used as auxiliary steam again, and the auxiliary steam sent to the secondary system is collected to the condenser or Condensate and Feedwater System (CFS).
- The auxiliary steam drain monitors the leakage of the radioactive materials from the boric acid evaporator to the condensed water of the ASSS.

10.4.11.2 System Description

10.4.11.2.1 General Description

The conceptual flow diagram is shown in Figure 10.4.11-1.

The system includes a control valve to reduce the main steam or turbine extracting steam pressure, auxiliary boiler package, auxiliary steam drain tank, auxiliary steam drain pump, auxiliary steam drain monitor, auxiliary steam drain monitor heat exchanger, condensed water piping and other components.

The components served by the system are categorized into two groups.

Group I components are shown below. For operation as required during startup, shutdown, plant regular inspection and normal operation, the auxiliary steam from the auxiliary boiler, main steam, or extracting steam is supplied to the components continuously or intermittently. Condensed water from these components is collected in

the auxiliary steam drain tank and then, by using the auxiliary steam drain pump, is transferred to the condenser during plant normal operation, or to the auxiliary boiler during the period in which the main steam is not available.

- Boric acid (B/A) evaporator
- B/A batching tank
- Non safety-related HVAC equipment

Monitoring the leakage from the primary side of the evaporator, the radiation monitor is attached to the downstream of the evaporator. The high alarm of the monitor isolates the condensing line from the evaporator to the drain tank and trips the pump.

Group II components served by the system are shown below. These components are supplied auxiliary steam from the auxiliary boiler during plant startup, shutdown or regular inspections due to unavailable of the main steam.

- Turbine gland seal
- Deaerator seal
- Deaerator heating

The auxiliary steam for group II components is collected in the turbine cycle.

10.4.11.2.2 Component Description

Auxiliary steam drain tank

The auxiliary steam drain tank collects the condensed water from group I components.

Auxiliary steam drain tank pump

The auxiliary steam drain pump transfers the condensed water from the group I components to the condenser during plant normal operation or to the auxiliary boiler in situations in which main steam is not available.

The pumps are actuated by the high water level signal of the tank, and then stopped by the low signal. The pumps are also tripped by the auxiliary steam drain monitor high alarm. Two pumps are used by the system, another one is a spare.

Auxiliary steam drain monitor heat exchanger

The auxiliary steam drain monitor heat exchanger keeps the temperature of condensed water from the evaporator below the allowable monitor temperature.

Auxiliary boiler package

The auxiliary boiler package supplies the auxiliary steam to the group I or II components

when main steam is not available. One auxiliary boiler package is installed to per unit.

10.4.11.2.3 System Operation

During startup, shutdown and plant regular maintenance

The steam generated by the auxiliary boiler is supplied to the group I, II components when main steam is not available. Demineralized water, as feedwater to the auxiliary boiler, is provided from the Condensate Storage Facility to the auxiliary boiler. Condensed water from the group I components is collected in the auxiliary steam drain tank, and the water is transfered to the auxiliary boiler by the auxiliary drain pump.

During plant normal operation

Auxiliary steam from main steam or turbine extracting steam is supplied to the group I and II components. The group II steam is collected to the turbine cycle.

Leakage of radioactive materials from primary side in the B/A evaporator

If there is leakage of radioactive materials from the primary side in the B/A evaporator, the auxiliary steam drain tank inlet isolation valve is closed and the auxiliary steam drain pumps are tripped by the auxiliary steam drain monitor high alarm. The high signal is alarmed to the main control room.

10.4.11.3 Safety Evaluation

The ASSS has no safety-related function and therefore requires no nuclear safety evaluation.

10.4.11.4 Tests and Inspections

Components of the system are monitored during operation to ensure satisfactory performance.

Periodic operation of all equipment is utilized for additional inspection, checkout, and maintenance.

10.4.11.5 Instrumentation Applications

The ASSS is provided with the necessary controls and indications for local or remote monitoring of system operation.

A temperature gauge is installed at the inlet of the auxiliary steam drain monitor. When the condensed water temperature through the monitor reaches the monitor line high temperature set point, the auxiliary steam drain monitor inlet stop valve is closed and the monitor is protected. High temperature is alarmed in the main control room.

The radiation monitor is provided to monitor the leakage of radioactive materials in the condensed water from the B/A evaporator. When the concentration of radioactive

material exceeds the set point, the auxiliary steam drain tank inlet isolation valve is closed and auxiliary steam drain tank pump is stopped. High radiation is alarmed in the main control room.

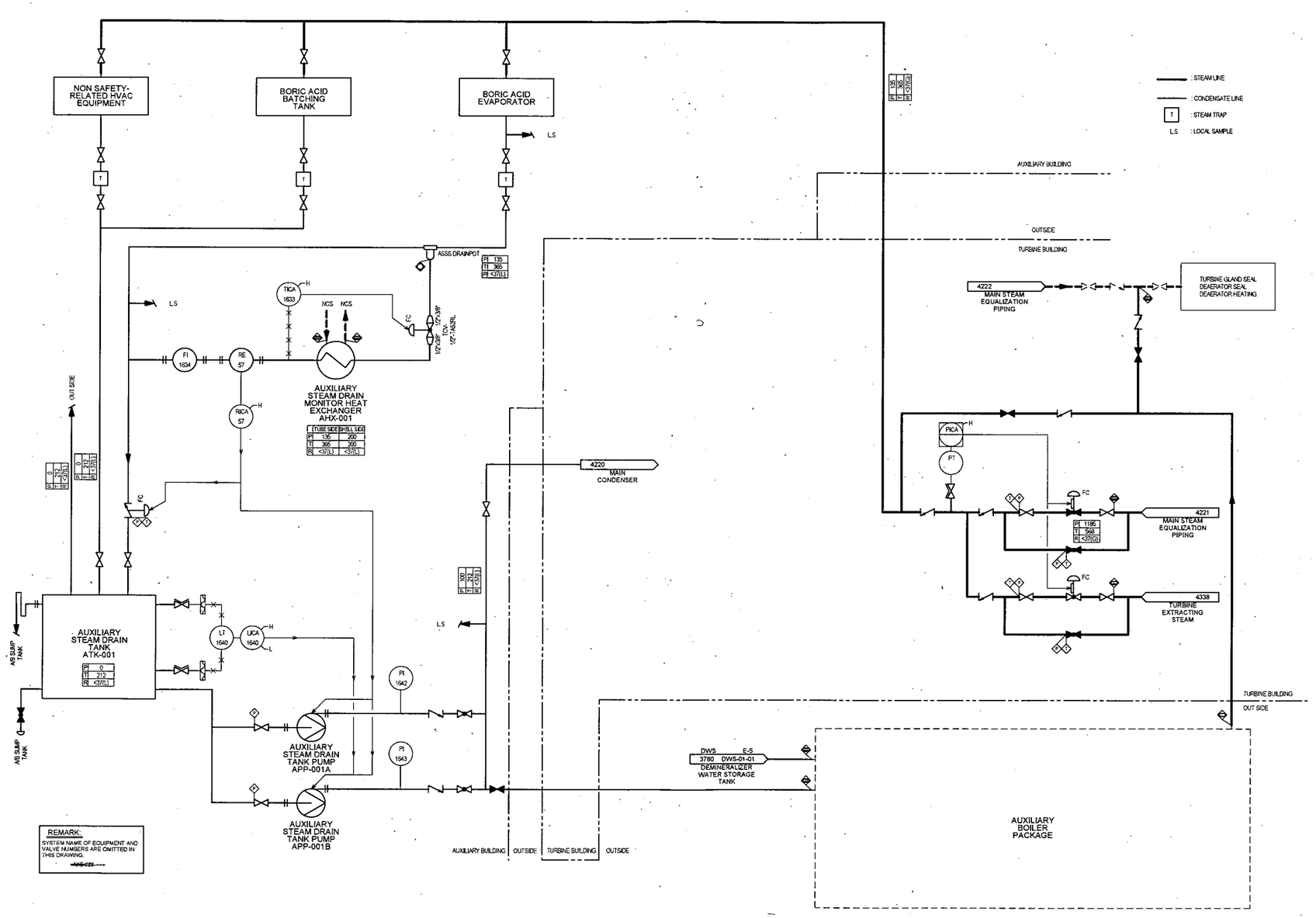

Figure 10.4.11-1 Auxiliary Steam Supply System Piping and Instrumentation Diagram

10.4.12 Combined License Information

COL 10.4(1) Circulating Water System

The Combined License Applicant is to determine the site specific final system configuration and system design parameters for the CWS including makeup water and blowdown.

COL 10.4(2) Steam Generator Blowdown System

The Combined License applicant is to address the discharge to Waste Water System including site specific requirements.

COL 10.4(3) Deleted.

COL 10.4(4) Deleted.

COL 10.4(5) System Design for Steam Generator Drain

The Combined License applicant is to address the nitrogen or equivalent system design for Steam Generator Drain Mode. (This is dependent on Waste water system design)

Chemical wastes are collected and pH adjusted. The waste is neutralized prior to being pumped to waste holdup tanks for further processing or transferred to a container for disposal. Figure 11.2-1 provides flexibility to process chemical effluent either way.

The CVDT provides storage of reactor coolant pump (RCP) seal leakages, letdown water, inside containment valve leakages, and accumulator (ACC) drainage. The liquid collected is normally sent to the chemical and volume control system (CVCS) for processing. Nitrogen gas is used as a blanket in the tank to exclude oxygen and air.

11.2.1.5 Site-Specific Cost-Benefit Analysis

The LWMS is designed for use at any site. The design is flexible so that site-specific requirements such as preference of technologies, the degree of automated operation, and radioactive liquid waste storage can be incorporated with minor modifications to the design.

RG1.110(Ref. 11.2-21) outlines compliance with 10 CFR 50, Appendix I (Ref. 11.2-2) numerical guidelines for offsite radiation doses as a result of radioactive liquid effluents during normal operations, including AOOs. The cost-benefit numerical analysis as required by 10 CFR 50, Appendix I, Section II, Paragraph D (Ref. 11.2-2) demonstrates that the addition of items of reasonably demonstrated technology will not provide a more favorable cost benefit.

The COL applicant is to perform a site-specific cost-benefit analysis to demonstrate compliance with the regulatory requirements

11.2.1.6 Mobile or Temporary Equipment

The LWMS is designed with permanently installed equipment (i.e., tanks, filters, activated charcoal filter, ion exchange columns, and pumps). The LWMS does not include the use of mobile or temporary equipment. However, a space is provided inside the A/B to accommodate future installation of mobile or temporary equipment. Process and utility piping and electrical connections are provided to forward liquid waste to future mobile system or temporary equipment, at the discretion of the facility operation. Treated liquid can be returned to the waste monitor tanks for sampling, recycling, and/or release.

11.2.2 System Description

The boundary of the liquid waste processing system starts at the building sumps and ends at the isolation valve of the discharge lines to a tank or the discharge header.

The liquid waste processing system equipment drainage and floor drainage processing subsystem consists of four WHTs, two waste holdup tank pumps, two liquid filters, an activated charcoal filter, four ion exchange columns, two waste monitor tanks, and two waste monitor tank pumps to collect treated fluid for analysis. A process flow diagram is presented in Figure 11.2-1(Sheet 1 of 3). The WHTs and waste monitor tanks and their associated pumps are located in the A/B. The filters and ion exchange columns are

the gaseous effluents with the numerical design objectives of 10 CFR 50, Appendix I (Ref. 11.3-3) and compliance requirements of 10 CFR 20.1302(Ref. 11.3-24), 40 CFR 190(Ref. 11.3-25).

11.3.3.2 Radioactive Effluent Releases and Dose Calculation due to Gaseous Waste Management System Leak or Failure

11.3.3.2.1 Waste gas surge tank leak

A waste gas surge tank leak is considered as an event that causes the maximum dose to the environment in case of a gaseous waste management system leak or failure.

The reactor coolant activity for the noble gases is based on a 300 μCi/g dose equivalent Xe-133 as stated in the technical specifications. All the noble gases in the reactor coolant are assumed to be transferred into the waste gas surge tank one day after the reactor shut down for a dose evaluation of a waste gas surge tank leak. The radioactive decay during this period is taken into account. The noble gas activity in the waste gas surge tank is calculated from the following equation.

$$A_i = \frac{C_i \cdot m \cdot \exp(-\lambda_i \cdot t)}{N} \qquad \text{Eq. 11.3-1}$$

where:

A_i = Activity of noble gas nuclide i in the waste gas surge tank (Ci)

C_i = Reactor coolant activity of nuclide i (μCi/g)

m = Reactor coolant mass (t)

λ_i = Decay constant of nuclide i (s^{-1})

t = Transfer time of all the noble gases from the reactor coolant to waste gas surge tank (s)

N = Number of gas surge tanks

All the gases released into the auxiliary building are assumed to be released into the atmosphere.

Dose to total body due to waste gas surge tank leak is calculated using the equation based on BTP 11-5(Ref. 11.3-18) shown below.

$$D = \sum_i \frac{K_i \cdot A_i \cdot (X/Q) \cdot (1E+12pCi/Ci)}{3.15E+07s/yr} \qquad \text{Eq. 11.3-2}$$

where:

D = Dose to total body (mrem)

A_i = Activity of noble gas nuclide i determined in Eq. 11.3-1(Ci/event)

COL 11.3 (6) The COL applicant is to calculate doses to members of the public following the guidance of RG 1.109(Ref. 11.3-19) and RG 1.111(Ref. 11.3-22), and compare the doses due to the gaseous effluents with the numerical design objectives of 10 CFR 50, Appendix I (Ref. 11.3-3) and compliance with requirements of 10 CFR 20.1302(Ref. 11.3-24), 40 CFR 190(Ref. 11.3-25).

COL 11.3 (7) Deleted

COL 11.3 (8) The COL applicant is to perform a site-specific cost benefit analysis to demonstrate compliance with the regulatory requirements.

COL 11.3 (9) The COL applicant is to provide piping and instrumentation diagrams (P&IDs).

11.3.8 References

11.3-1 Calculation of Releases of Radioactive Materials in Gaseous and Liquid Effluents from Pressurized Water Reactors (PWR-GALE Code), NUREG-0017, Rev. 1, April 1985.

11.3-2 Design Guidance for Radioactive Waste Management Systems, Structures, and Components Installed in Light-Water-Cooled Nuclear Power Plants, Regulatory Guide 1.143, Rev. 2, November 2001.

11.3-3 Numerical Guides for Design Objectives and Limiting Conditions for Operation to Meet the Criterion "As Low as Reasonably Achievable" for Radioactive Material in Light-Water-Cooled Nuclear Power Reactor Effluents, NRC regulations Title 10, Code of Federal Regulations, 10 CFR Part 50, Appendix I.

11.3-4 Standards for Protection Against Radiation, NRC Regulations Title 10, Code of Federal Regulations, 10 CFR Part 20, December 2002.

11.3-5 General Design Criteria for Nuclear Power Plants, NRC Regulations Title 10, Code of Federal Regulations, 10 CFR Part 50, Appendix A, GDC 64.

11.3-6 American National Standard for Gaseous Radioactive Waste Processing System. American National Standards Institute, ANSI 55.4, 1993 Edition.

11.3-7 Fire Protection, General Design Criteria for Nuclear Power Plants, NRC Regulations Title 10, Code of Federal Regulations, 10 CFR Part 50, Appendix A, GDC 3.

11.3-8 Fire Protection for Operating Nuclear Power Plants, Regulatory Guide 1.189, Rev. 0, U.S. Nuclear Regulatory Commission, Washington, DC, April 2001.

Table 12.2-18 Chemical and Volume Control System Radiation Sources Mixed Bed Demineralizer Source Strength (70 ft^3 of Resin) 12.2-35

Table 12.2-19 Chemical and Volume Control System Radiation Sources Cation-Bed Demineralizer Activity (30 ft^3 of Resin) 12.2-36

Table 12.2-20 Chemical and Volume Control System Radiation Sources Cation-Bed Demineralizer Source Strength (30 ft^3 of Resin) 12.2-37

Table 12.2-21 Chemical and Volume Control System Radiation Sources Reactor Coolant Filter 12.2-38

Table 12.2-22 Chemical and Volume Control System Radiation Sources Volume Control Tank Activity (Liquid Phase) 12.2-39

Table 12.2-23 Chemical and Volume Control System Radiation Sources Volume Control Tank Source Strength (Liquid Phase) 12.2-40

Table 12.2-24 Chemical and Volume Control System Radiation Sources Volume Control Tank Specific Activity (Vapor Phase) 12.2-41

Table 12.2-25 Chemical and Volume Control System Radiation Sources Volume Control Tank Source Strength (Vapor Phase) 12.2-42

Table 12.2-26 Chemical and Volume Control System Radiation Sources Holdup Tank Activity (Liquid Phase) 12.2-43

Table 12.2-27 Chemical and Volume Control System Radiation Sources Holdup Tank Source Strength (Liquid Phase) 12.2-44

Table 12.2-28 Chemical and Volume Control System Radiation Sources Holdup Tank Activity (Vapor Phase) 12.2-45

Table 12.2-29 Chemical and Volume Control System Radiation Sources Holdup Tank Source Strength (Vapor Phase) 12.2-45

Table 12.2-30 Volume Control Tank Noble Gas Stripping Fractions without assumption of purging 12.2-46

Table 12.2-31 Volume Control Tank Noble Gas Stripping Fraction with assumption of purging 12.2-47

Table 12.2-32 Spent Fuel Pit Radiation Sources Spent Fuel Pit Water 12.2-48

Table 12.2-33 Spent Fuel Pit Demineralizer Sources (70 ft^3 of Resin) 12.2-49

Table 12.2-34 Spent Fuel Pit Filter Source Strengths 12.2-50

Table 12.2-35 SG Blowdown Demineralizer Activity (350 ft^3 of Resin) 12.2-51

Table 12.2-36 SG Blowdown Demineralizer Source Strength (350 ft^3 of Resin) 12.2-52

Table 12.2-37 Liquid Waste Management System Radiation Sources Waste Holdup Tank Activity 12.2-53

Table 12.2-38 Liquid Waste Management System Radiation Sources Waste Holdup Tank Source Strength 12.2-54

Table 12.2-39 Liquid Waste Management System Radiation Sources Waste Demineralizer (Anion Bed: 70 ft^3 of Resin) 12.2-55

Table 12.2-40 Liquid Waste Management System Radiation Sources Waste Demineralizer Activity (Cation Bed: 70 ft^3 of Resin) 12.2-56

Table 12.2-41 Liquid Waste Management System Radiation Sources Waste Demineralizer Source Strength (Cation Bed: 70 ft^3 of Resin) 12.2-57

Table 12.2-42 Liquid Waste Management System Radiation Sources Waste Demineralizer Activity (Mixed Bed: 70 ft^3 of Resin) 12.2-58

Table 12.2-43 Liquid Waste Management System Radiation Sources Waste Demineralizer Source Strength (Mixed Bed: 70 ft^3 of Resin) 12.2-59

Table 12.2-44 Gaseous Waste Management System Radiation Sources Charcoal Bed Activity 12.2-60

Table 12.2-45 Gaseous Waste Management System Radiation Sources Charcoal Bed Source Strength 12.2-61

Table 12.2-46 Gaseous Waste Management System Radiation Sources Waste Gas Surge Tank Activity 12.2-62

Table 12.2-47 Gaseous Waste Management System Radiation Sources Waste Gas Surge Tank Source Strength 12.2-63

Table 12.2-48 Solid Waste Management System Radiation Sources Spent Resin Storage Tank activity 12.2-64

Table 12.2-49 Solid Waste Management System Radiation Sources Spent Resin Storage Tank Source Strength 12.2-65

Table 12.2-50 Miscellaneous Sources – Refueling Water Storage Auxiliary Tank 12.2-66

Table 12.2-51 Miscellaneous Sources – Primary Makeup Water Tank 12.2-67

Table 12.2-52 Residual Heat Removal System Activity - 4 Hours after Shutdown 12.2-68

12.4 Dose Assessment

Radiation exposures in the plant are primarily due to direct radiation from components and equipment containing radioactive material. In addition, in some areas of the plant, there can be radiation exposure to personnel due to the presence of airborne radionuclides. This section addresses the anticipated occupational radiation exposure due to normal operation and anticipated inspection and maintenance.

The radiation source terms and the shielding design that determine direct radiation dose rates are discussed in Section 12.2 and Subsection 12.3.2. The plant layout of equipment and shielding is shown in Figure 12.3-1. Radiation exposure to personnel due to the presence of airborne radionuclides is discussed in Subsection 12.2.2.

The plant is designed to keep radiation exposures within limits and ALARA (see Sections 12.1 and 12.3). In addition, a radiation protection program in place to assure that radiation exposures is to be within limits and ALARA is described in Section 12.5.

In-plant radiation exposures during normal operation and anticipated operational occurrences are incurred from the following activities (Reference 12.4-1):

- Operations and Surveillance
- Routine maintenance
- Waste processing
- Refueling operations
- ISI
- Special maintenance

The radiation exposure from the above activities will vary from plant to plant. The NRC compiles and publishes annual occupational radiation exposures from its licensees in NUREG-0713, "Occupational Radiation Exposure at Commercial Nuclear Power Reactors and Other Facilities" (Reference 12.4-2). The latest edition of NUREG-0713 (Reference 12.4-2) (Vol. 27) includes data through 2005. Table 4.2 of NUREG-0713 (Reference 12.4-2) lists the average annual exposures from US pressurized-water reactors (PWRs) for the years 1973 through 2005. Prior to 1988, the reported exposure per reactor routinely exceeded 300 person-rem per year. After 1988, the exposures dropped from 300 person-rem per year to less than 100 person-rem per year in 2000. The total average exposure per reactor has remained less than 100 person-rem per year since that time.

See the following items for reasons for the drop in radiation exposures:

- Better nuclear fuel performance. The amount of fission products "leaked" from fuel elements is far smaller than the "design basis" 1% value.

- Better fuel performance has led to fewer refueling outages. Prior to 1990, annual refueling outages were not uncommon. The US-APWR will be on a 24-month cycle.
- ALARA awareness, ALARA training, and ALARA planning included by plant operators in refueling and maintenance activities further reduced unnecessary exposures.
- Refueling and other major outage planning that includes ALARA considerations has led to shorter outages and, therefore, less exposure.
- Plants have also undertaken Cobalt reduction programs to minimize the Cobalt-60 source of radioactivity.

Tables 12.4-1 thorough 12.4-8 are based on RG 8.19 "Occupational Radiation Dose Assessment in Light-Water Reactor Power Plants Design Stage Man-Rem Estimates," Rev 0, 1978 (Reference 12.4-1). Table 12.4-8 is a summation of the US-APWR's individual dose estimates in person-rem/year. The total annual station exposure is 72.63 person-rem, which is substantially less than the 100 person-rem annual value cited in NUREG -0713 (Reference 12.4-2).

Because of extended fuel cycles (18-24 month), some activities performed concurrently with refueling outages (e.g., major maintenance and ISIs) may not be done annually. The annual doses for a particular reactor may vary around the 100 person-rem average. For this reason, the NRC is also compiling a rolling 3-year average as a better metric to account for the longer fuel cycle. The information in NUREG-0713, Table 4.6 (Reference 12.4-2), lists the 3-year rolling average exposure for US PWRs for the years 2003-2005. The 3-year average exposures at 42 sites (69 PWR reactors) range from 43 person-rem (Seabrook) to 195 person-rem (Palisades). Of the 42 sites, only eight exceeded 100 person-rem per year.

Specific current data from a two-unit Westinghouse four-loop PWR plant site, the Comanche Peak Steam Electric Station, for seven consecutive years is presented in Table 12.4-9. There is a rise in 2002 and 2005 to approximately 120 person-rem per reactor unit due to maintenance and refueling. The average over the 3-year period of 2000 through 2002 and 2003 through 2005 is 75.76 and 75.09 person-rem respectively. This data exemplifies the NRC's reasoning that a three-year rolling average may be a better representation of expected dose rates, and indicates that the expected radiation exposures during the similar operation of the US-APWR may be less than 100 person-rem per year.

The conservative source term and shielding, the nuclear fuel performance, the facility layout, and the equipment and piping layout and design incorporated in the US-APWR design will contribute to lower plant exposures (See Section 12.3). Based on PWR experience cited above from NUREG-0713 (Reference 12.4-2), RG 8.19 (Reference 12.4-1), the Comanche Peak Steam Electric Station data, and the US-APWR design, it is expected that operation of the US-APWR results in radiation exposures of less than 100 person-rem per year.

12.4.1 Occupational Radiation Exposure

Radiation exposures to operating personnel are restricted to the limits of 10 CFR 20 (Reference 12.4-3). The Operational health physics program described in Section 12.5 and the radiation protection features described in Section 12.3 together maintain occupational radiation exposures ALARA. The airborne concentration is shown in Table 12.2-61. The airborne dose is less than the dose limit of 10 CFR 20 (Reference 12.4-3).

In the analysis of occupational radiation exposure data from operating plants of a design similar to the US-APWR, that is, domestic plants having Westinghouse-designed nuclear steam supply systems, the best operating plant performance is 0.1 rem per megawatt electrical per year of electricity produced. Major factors contributing to this level of occupational radiation exposure include low plant radiation fields, good layout and access provisions, and operational practices and procedures that minimize time spent in radiation fields. As discussed, the US-APWR design incorporates features to reduce occupational radiation exposure that goes beyond the designs provided for plants currently in operation.

The estimated annual occupational radiation exposures are developed within the following categories (Reference 12.4-1):

- Routine Operations and Surveillance
- Non-routine Operations and Surveillance
- Routine maintenance
- Waste processing
- Refueling operations
- ISI
- Special maintenance

Exposure data obtained from operating plants have been reviewed to obtain a breakdown of the doses incurred within each category. For several routinely performed operations, this information has been used to develop detailed dose predictive models. These models identify the various steps that are included in the operation, radiation zones, required number of workers, and the time to perform each step. This information has been used to develop dose estimates for each of the preceding categories. There is no separate determination of doses due to airborne activity. Experience demonstrates that the dose from airborne activity is not a significant contributor to the total doses.

12.4.1.1 Operations and Surveillance

To support plant operations, the performance of various systems and components is monitored. In addition, the operation of some of the manual valves requires personnel to enter radiation fields.

Examples of activities in this category are as follows:

- Routine inspections of the plant components and systems
- Unidentified leak checks
- Operation of the manual valves
- Reading of the instruments
- Routine health physics patrols and surveys
- Decontamination of the equipment or plant work areas
- Calibration of the electrical and mechanical equipment
- Chemistry sampling and analysis

When the plant is at power, the containment radiation fields are significantly higher than at plant shutdown. The frequency and duration of at-power containment entries is dependent on the plant operator. Tables 12.4-1 and 12.4-2 provide a breakdown of the collective doses for routine and non-routine operations and surveillance respectively. The occupational radiation exposure above the operation floor in the containment vessel is reduced by the labyrinth structure between reactor vessel and primary shielding.

12.4.1.2 Routine Maintenance

Routine maintenance is required for mechanical and electrical components. Table 12.4-3 provides a breakdown of the collective doses for routine maintenance. Exposures can be minimized by having good access to equipment and large work area for adequate maintenance activities, a characteristic of the US-APWR layout.

12.4.1.3 Waste Processing

The US-APWR radwaste system designs incorporate an uncomplicated approach to waste processing. Elimination of high maintenance components contributes significantly to lower anticipated doses due to waste processing activities. Estimated annual doses from waste processing operations appear in Table 12.4-4.

12.4.1.4 Fuel Handling

The refueling process is labor intensive. Detailed planning and the coordination of effort are essential in order to maintain personnel doses ALARA. The incorporation of advanced technology into the refueling process also reduces doses. Table 12.4-5 provides dose estimates for the various refueling activities.

The design of the new fuel handling and storage areas precludes criticality under all postulated normal and accident conditions. Therefore, criticality monitors, as stated in 10 CFR 50.68 (Reference 12.4-4), are not needed. The long-term refueling cycle of the US-APWR (maximum 24 month) reduces the annual occupational radiation exposure.

12.4.1.5 In-service Inspection

American Society of Mechanical Engineers Code, Section XI (Reference 12.4-5) requires periodic ISI on plant safety-related components. The Code defines the ISI interval as a 10-year period and sets requirements for each one-third interval (each 40 months). In general, at least 25% (with credit for no more than 33-1/3 percent) of the specified inspections must be performed in each 40-month testing interval. The amount of inspection required for an area varies according to the category but is explicitly defined in the Code. Table 12.4-6 provides the dose estimates for ISI activities. Insulation with shielding materials is used on the primary coolant piping. The inspection of reactor vessel are remote-operated with the UT (Ultrasonic Test) machine which MHI developed. These effects reduce the occupational radiation exposure.

12.4.1.6 Special Maintenance

Maintenance that goes beyond the routine scheduled maintenance is considered as special maintenance. This category includes both the modification of equipment to upgrade the plant and repairs to failed components. Dose estimates assume no significant equipment upgrade efforts. The occupational radiation exposure resulting from unscheduled repairs on valves, pumps, and other components will be lower for the US-APWR than for current plant designs because of the reduced radiation fields, increased equipment reliability, and the reduced number of components relative to currently operating plants. Table 12.4-7 provides the estimated doses due to special maintenance operations. In the inspection of SG heat-transfer tube, the occupational radiation exposure can be reduced by the remote operation using the ECT (Eddy Current Test) machine and its remote attachment equipment, both of which MHI developed.

12.4.1.7 Overall Plant Doses

The estimated annual personnel doses associated with the seven activity categories discussed above are summarized in Table 12.4-8.

12.4.1.8 Post-Accident Actions

Requirements of 10 CFR 50.34(f)(2)(viii) (Reference 12.4-6), are included in Chapter 1, Subsection 1.9.3. If procedures are followed, the design prevents radiation exposures to any individual from exceeding 5 rem to the whole body or 50 rem to the extremities. Figure 12.3-2 shows the general plant arrangement with the vital areas that must be accessed in the post-accident environment identified. Figures 12.3-3 through 12.3-6 contain radiation zone maps for plant areas including those areas requiring post-accident access. This figure shows projected radiation zones in areas requiring access and access routes or ingress, egress, and performance of actions at these locations. The radiation zone maps reflect maximum radiation fields over the course of an accident. The analyses that confirm that the individual personnel exposure limits following an accident are not exceeded reflect the time-dependency of the area dose rates and the

SURVEILLANCE REQUIREMENTS (continued)

SURVEILLANCE		FREQUENCY
SR 3.7.5.3	----------NOTE---------- EFW train(s) may be considered OPERABLE during alignment and operation for steam generator level control, if it is capable of being manually realigned to the EFW mode of operation. ---------- Verify each EFW automatic valve that is not locked, sealed, or otherwise secured in position, actuates to the correct position on an actual or simulated actuation signal.	[24 months OR In accordance with the Surveillance Frequency Control Program]
SR 3.7.5.4	----------NOTES---------- 1. Not required to be performed for the turbine driven EFW pump until 24 hours after ≥ 1000 psig in the steam generator. 2. EFW train(s) may be considered OPERABLE during alignment and operation for steam generator level control, if it is capable of being manually realigned to the EFW mode of operation. ---------- Verify each EFW pump starts automatically on an actual or simulated actuation signal.	[24 months OR In accordance with the Surveillance Frequency Control Program]

Table19.1-56 Screened Multiple Compartment Scenarios

Fire Scenario No.	Fire exposing Area	Fire exposed Area	CDF [1RY]
FA2-205-M-05	FA2-205	FA2-206	3.7E-08
FA2-202-M-04	FA2-202	FA2-201	3.1E-08
FA6-101-M-02	FA6-101-01	FA6-101-04	2.5E-08
FA2-206-M-06	FA2-206	FA2-201	9.8E-09

Table 1 Change List identified "No Revision Bar" (1/59)

Page	Location (e.g., subsection with paragraph/ sentence/ item, table with row/column, or figure)	Description of Change
3.2-57	Table 3.2-2 (Sheet 42) 17th Row, 2nd Column	Change: "5" to "2" Editorial: Correct classification ***No Revision Bar***
3.2-57	Table 3.2-2 (Sheet 42) 17th Row, 4th Column	Change: "N/A" to "B" Editorial: Correct classification ***No Revision Bar***
3.2-57	Table 3.2-2 (Sheet 42) 17th Row, 5th Column	Change: "N/A" to "YES" Editorial: Correct classification ***No Revision Bar***
3.2-57	Table 3.2-2 (Sheet 42) 17th Row, 7th Column	Change: "NS" to "I" Editorial: Correct classification ***No Revision Bar***
3.2-63	Table 3.2-2 (Sheet 48) 14th Row, 7th Column	Delete: "I" Editorial: Information is not applicable. ***No Revision Bar***
3.6-10	Subsection 3.6.2.1.1.1 2nd Paragraph, 5th Item 2nd Sentence	Change: "...Subsection 3.6.2.1." to "...Subsection 3.6.2.1.1.2." Editorial: Correct typographical error ***No Revision Bar***
3.6-13	Subsection 3.6.2.1.3.1 4th Paragraph	Delete 4th Paragraph: "Without the benefit of stress calculations, break locations are postulated at each fitting, valve, or welded attachments." Editorial: ***No Revision Bar***
3.7-30	Subsection 3.7.2.4 7th Paragraph	Delete in its entirety: "SSI effects is also ... ▪ Seismic category I UHSRS" Editorial: Transfer scope to Subsection 3.7.2.4.1 to align with subject matter ***No Revision Bar***
3.7-44	Subsection 3.7.3 1st Paragraph, 4th Sentence	Change: "... civil structure-related subsystems may include but are not limited to the following:" to "... civil structure-related subsystems include:" Editorial: Clarify scope of statement ***No Revision Bar (Revision bar offset)***

Table 1 Change List identified "No Revision Bar" (2/59)

Page	Location (e.g., subsection with paragraph/ sentence/ item, table with row/column, or figure)	Description of Change
3.9-34	Subsection 3.9.3.1 Footnote # 3, 4th Sentence	Change: "In certain cases for non-standard SSCs, the 1/3 SSE may be adjusted higher for plant specific site as justified in COL application per SECY 93-087 (Reference 3.9-17)." to "In certain cases for non-standard SSCs, the 1/3 SSE may be adjusted higher for site-specific design as permitted by SECY 93-087 (Reference 3.9-17). Editorial: Remove superfluous word and editorial changes. ***No Revision Bar***
3.9-87	Subsection 3.9.10 Reference 3.9-56	Insert new reference below: "3.9-57 Summary of Design Transient, Mitsubishi Heavy Industries, January 2009." Editorial: Identify new references ***No Revision Bar***
3.9-87	Subsection 3.9.10 Reference 3.9-56	Insert new reference below: "3.9-58 Summary of Seismic and Accident Load Conditions for Primary Components and Piping Design, Mitsubishi Heavy Industries, January 2009." Editorial: Identify new references ***No Revision Bar***
3.9-87	Subsection 3.9.10 Reference 3.9-56	Insert new reference below: "3.9-59 Summary of Stress Analysis Results for Components and Piping, Mitsubishi Heavy Industries, March 2009." Editorial: Identify new references ***No Revision Bar***
3.9-188	Table 3.9-14 (Sheet 78) 4th Row	Add in new 5th row below: "NCS-MOV-316A; Charging Pump component cooling water return; Remote; Maintain Open; Remote Position; B; Remote Position Indication, Exercise/2 Years Exercise Full Stroke/Cold Shutdown Operability Test" Editorial: Correct erroneously omit ***No Revision Bar***

Table 1 Change List identified "No Revision Bar" (3/59)

Page	Location (e.g., subsection with paragraph/ sentence/ item, table with row/column, or figure)	Description of Change
3.9-189	Table 3.9-14 (Sheet 79) 1st Row	Add in new 2nd row below: "NCS-MOV-316B; Charging Pump component cooling water return; Remote; Maintain Open; Remote Position; B; Remote Position Indication, Exercise/2 Years Exercise Full Stroke/Cold Shutdown Operability Test" Editorial: Correct erroneously omit ***No Revision Bar***
3.9-202	Table 3.9-14 (Sheet 92) 4th Row, 4th Column	Change: "Maintain Open" to "Maintain Close" Editorial: Correct Safety-Related Missions description ***No Revision Bar***
3.9-202	Table 3.9-14 (Sheet 92) 5th Row, 4th Column	Change: "Maintain Open" to "Maintain Close" Editorial: Correct Safety-Related Missions description ***No Revision Bar***
3.9-246	Table 3.9 (Sheet 136) 2nd Row	Add in new 3rd row below: "RMS-MOV-001; Containment Air Sampling Line Containment Isolation Inside of CV; Remote; Maintain Close Transfer Close; Active Containment Isolation Safety Seat Leakage Remote Position; A; Remote Position Indication, Exercise/2 Years Containment Isolation Leak Test Exercise Full Stroke/ Cold Shutdown Operability Test; 5 6" Editorial: Correct erroneously omit ***No Revision Bar***
3.9-246	Table 3.9 (Sheet 136) 3rd Row	Add in new 4th row below: "RMS-MOV-002; Containment Air Sampling Line Containment Isolation Outside of CV; Remote; Maintain Close Transfer Close; Active Containment Isolation Safety Seat Leakage Remote Position; A; Remote Position Indication, Exercise/2 Years Containment Isolation Leak Test Exercise Full Stroke/ Cold Shutdown Operability Test; 5 6" Editorial: Correct erroneously omit ***No Revision Bar***

Table 1 Change List identified "No Revision Bar" (4/59)

Page	Location (e.g., subsection with paragraph/sentence/ Item, table with column/row, or figure)	Description of Change
5.2-4	Table 5.2.1-2	Editorial: Deleted sentence based on the following reason Deleted the code cases of Class 2 and 3 piping because these code cases are addressed in Section 3.12. And deleted Note (1) and (2) because these sentences are same as the descriptions of Section 5.2.1.2. ***No Revision Bar***
5.4-92	5.4.13. COL 5.4(1)~ 5.4(7)	Editorial Deleted from COL item because RCP inspection interval is described in DCD Chapter 16, and SG program is added in DCD. ***No Revision Bar***

Table 1 Change List identified "No Revision Bar" (5/59)

Page	Location (e.g., subsection with paragraph/ sentence/ item, table with row/column, or figure)	Description of Change
6.2-46	6.2.2.2.5, last two paragraph 6.2.2.2.6 add new subsection	Technical: Incorporate the Technical Report, "Sump Strainer Performance," MUAP-08001 Added new section to address strainer design and post accident performance and deleted excessive information duplicated in the Sump Strainer Performance Evaluation document. ***No Revision Bar***
6.2-144	Table 6.2.2-2 No.1.1.1.3 US-APWR Design	Technical: Incorporate the Technical Report, "Sump Strainer Performance," MUAP-08001 Deleted "fin, or cassette-". ***No Revision Bar***

Table 1 Change List identified "No Revision Bar" (6/59)

Page	Location (e.g., subsection with paragraph/ sentence/ item, table with row/column, or figure)	Description of Change
9.5-9	9.5.1.2.1, Control of Combustible Materials, fifth paragraph	Editorial: Change to appropriate word. Change: "ensure" to "assure". ***No Revision Bar***
9.5-154	Table 9.5.7-1	Editorial: Delete unnecessary column Delete "type". Change :"Seismic design Category : 1" to "Seismic Category : I" ***No Revision Bar***
9A-6	9A2.4, Combustible Loading Tabulation	Editorial: Delete unnecessary explanation. Delete "Table 9A-3". ***No Revision Bar***

Table 1 Change List identified "No Revision Bar" (7/59)

Page	Location (e.g., subsection with paragraph/sentence/ Item, table with column/row, or figure)	Description of Change
10.2-1	Section 10.2.1.1 The first line of the second paragraph	Editorial First sentence is to be replaced by the following sentence. 'The T/G could be potential source of high-energy turbine missiles, which could cause damage to safety-related equipment of systems.' ***No Revision Bar***
10.2-1	Section 10.2.1.2 The second sentence of the fourth bullet	Editorial '.....and is also designed to fail with the T/G in a safe position.' shall be replaced by 'and is also designed to trip the T/G at the failure of the control system.' ***No Revision Bar***
10.2-2	Section 10.2.2.1 The first line of the first paragraph	Editorial 'The T/G is a tandem compound.....' shall be replaced by 'The T/G is an 1800rpm tandem compound.....' ***No Revision Bar***
10.2-2	Section 10.2.2.1 The last sentence of the last paragraph	Editorial 'See Section 3.2.....' shall be replaced by 'See Section 3.7.....'. ***No Revision Bar***
10.2-2	Section 10.2.2.2 The first sentence of the first paragraph	Editorial First sentence of the first paragraph 'The turbine is an 1800 rpm.....with 74-inch last rotating blades:' shall be deleted. ***No Revision Bar***
10.2-3	Section 10.2.2.2.1 The first sentence of the fifth paragraph	Editorial 'Steam' shall be added at the top of the sentence. ***No Revision Bar***
10.2-3	Section 10.2.2.2.2 The first sentence of the second paragraph	Editorial The first sentence 'The HPT rotor is machined from an alloy steel forging' shall be replaced by 'The HPT rotor is machined from an alloy steel forging (mono block design).' ***No Revision Bar***

Table 1 Change List identified "No Revision Bar" (8/59)

Page	Location (e.g., subsection with paragraph/sentence/ Item, table with column/row, or figure)	Description of Change
10.2-4	Section 10.2.2.2.5 The first paragraph	Editorial First paragraph shall be replaced by the following sentence. 'There are three double flow LPTs with 74-inch last stage blades. Reheated steam enters each of the LPTs through the RSV and the IV and expands in the blade path axially through stationary and rotating blades' ***No Revision Bar***
10.2-4	Section 10.2.2.2.5 Between fourth and fifth paragraph	Editorial At the top of the fourth paragraph, the following sentence shall be added; 'The LPT rotors are machined from an alloy steel forging (mono block design).' ***No Revision Bar***
10.2-7	Section 10.2.2.3.1.3 The third sentence of the first paragraph	Editorial 'When the turbine is started, ...' shall be replaced by 'When the turbine is placed in operation, ...' ***No Revision Bar***
10.2-8	Section 10.2.2.3.1.5 The second sentence of the second paragraph	Editorial The sentence 'The failure of a single valve' shall be replaced by 'The failure of a single OPC solenoid valve'. ***No Revision Bar***
10.2-20	Section 10.2.3.5 The third sentence of the first bullet	ISI interval of the high-pressure turbine is changed from 'about 8 years' to 'about 10 years' for the purpose of the consistency with the ISI interval of the low-pressure turbine. ***No Revision Bar***
10.2-20	Section 10.2.3.5 The first sentence of the second bullet	First sentence of the second bullet 'At least the main steam stop valves, main steam control valves, reheat stop valves and intercept valves are dismantled.....' shall be replaced by 'At least one main stop valve, one main steam control valve, one reheat stop valve and one intercept valve are dismantled .....' ***No Revision Bar***
10.2-20	Section 10.2.3.5 The last sentence of the second bullet	The last sentence of the second bullet 'A combined license holder recommendation for a valve inspection frequency.....by missile generation probability calculations.' shall be deleted. ***No Revision Bar***

Table 1 Change List identified "No Revision Bar" (9/59)

Page	Location (e.g., subsection with paragraph/sentence/ Item, table with column/row, or figure)	Description of Change
10.2-20	Section 10.2.3.5 Additional sentence added at the last of this section	The following sentences shall be added at the end of this section. 'The Combined License Applicant is to develop turbine maintenance and inspection procedure and then to implement prior to fuel load. Plant startup procedure including warm-up time will be completed therein.' ***No Revision Bar***
10.2-21	Section 10.2.4 The last sentence of the last paragragh	Editorial 'Discussion of the radiological aspects.....are presented in Chapter 11 and 12.' shall be replaced by 'Discussion of the radiological aspects..... are presented in Chapter 11.' 'Chapter 12' shall be deleted. ***No Revision Bar***
10.2-21	Section 10.2.5 COL information sentence revised	COL information sentences shall be changed as follows; '*The Combined License Applicant is to develop turbine maintenance and inspection procedure and then to implement prior to fuel load. Plant startup procedure including warm-up time will be completed therein.*'. ***No Revision Bar***
10.2-21	Section 10.2.6 References	Reference number of item 10.2-9 and 10.2-10 changed. MUAP-070028 → MUAP-07028 MUAP-070029 → MUAP-07029 ***No Revision Bar***
10.2-22	Table 10.2-1	Editorial Appearance is changed (from right aligned lined to center aligned) Manufacturer's name is changed from 'Mitsubishi' to 'Mitsubishi Heavy Industries, Ltd.'. ***No Revision Bar***
10.3-1	10.3 Main Steam Supply System	Changed "steam converter" to "auxiliary steam supply system (ASSS)". Technical: The steam converter is deleted in the 10.4.11. The ASSS uses main steam or turbine extracting steam as a auxiliary steam. ***No Revision Bar***

Table 1 Change List identified "No Revision Bar" (10/59)

Page	Location (e.g., subsection with paragraph/sentence/ Item, table with column/row, or figure)	Description of Change
10.3-6	10.3.2.2.1 Main Steam Delivery	Changed "steam converter" to "ASSS". Technical: The steam converter is deleted in the 10.4.11. The ASSS uses main steam or turbine extracting steam as a auxiliary steam. ***No Revision Bar***
10.3-7	10.3.2.3.2 Main Steam Safety Valves	Inserted "The COL applicant is to address the actual throat area of the MSSVs." after sixth paragraph. Technical: The information for overpressure protection comonents is required by R.G 1.206 C.I. 5.2.2. Refer subsection 5.2.2. ***No Revision Bar***
10.3-18	10.3.6.3 Flow-Accelerated Corrosion (FAC)	Inserted "The Combined License Applicant is to address preparation of an FAC monitoring program for carbon steel portions of the steam and power conversion systems that contain water or wet steam." After the third paragraph. Editorial: The sentence being replaced in the FSAR is inserted. ***No Revision Bar***
10.3-18	10.3.7 Combined License Information	Added "COL 10.3(2) Safety and Relief valve information The Combined License Applicant is to address the actual throat area of the MSSV.". Technical: The information for overpressure protection comonents is required by R.G 1.206 C.I. 5.2.2. Refer subsection 5.2.2. ***No Revision Bar***
10.3-21	Table 10.3.2-2 Main Steam System Valves (Sheet 1 of 3) Main Steam Safety Valve	Added "design temperature" to this table. Technical: The lack of technical information is added. ***No Revision Bar***

Table 1 Change List identified "No Revision Bar" (11/59)

Page	Location (e.g., subsection with paragraph/sentence/ Item, table with column/row, or figure)	Description of Change
10.3-22	Table 10.3.2-2 Main Steam System Valves (Sheet 2 of 3) Main steam depressurization valve, main steam relief valve block valve, main steam isolation valve, main steam check valve, main steam bypass isolation valve.	Added "number per main steam line" to this table. Technical: The lack of technical information is added. ***No Revision Bar***

Table 1 Change List identified "No Revision Bar" (12/59)

<table>
<tr><th>Page</th><th>Location
(e.g., subsection with paragraph/sentence/ Item, table with column/row, or figure)</th><th>Description of Change</th></tr>
<tr><td>10.3-26</td><td>Table 10.3.3-1
Main Steam Supply System Failure Modes and Effects Analysis (Sheet 1 of 3)</td><td>Order of numbering of the following items are changed in the manner shown below: 1 to 4 → combined; labeled as item 1.
<table>
<tr><th>Description of component</th><th>Active Safety function</th><th>Plant operating mode</th><th>Failure mode(s)</th><th>Method of failure detection</th><th>Failure effect on system safety function capability</th></tr>
<tr><td>Main Steam Isolation Valve (MSIV) NMS-AOV-515A,B,C, D Normally open, fail closed air-operated valve</td><td>Isolates each main steam line. Isolates containment.</td><td>During power operation</td><td>Fails closed or fails to open on demand</td><td>Valve position Indication on the main control room</td><td>No safety-related impact on plant. Plant goes to safe shutdown condition.</td></tr>
<tr><td></td><td></td><td>Steam System Piping Failure Steam Generator Tube Rupture Loss of Coolant Accident Safe shutdown</td><td>Solenoid valve for actuating the MSIV fails to open on demand</td><td>Valve testing is done in accordance with the Inservice Testing Program. If there are any problems with the solenoid valve, the failure is detected during the testing.</td><td>No safety-related impact on plant. MSIV is actuated by a separate train of solenoid valves with redundancy and different class 1E power bus. Failure of either train of solenoid valves does not impair isolation function of MSIV.</td></tr>
</table>
Technical: The main steam isolation valve at US-APWR is swing type check valve, and usually, the valve disc is normally opened forcibly by instrumental air, however, by discharging instrumental air, the valve closes on its own by the self-weight of the valve disc and the spring force. Therefore, we do not assume single failure considering the body of main steam isolation valve as the static equipment, and single failure is dealt with only for the solenoid valve which is used for the discharging of instrumental air for closing the valve by making it redundant.
Changed the name of plant condition.
No Revision Bar</td></tr>
</table>

Table 1 Change List identified "No Revision Bar" (13/59)

<table>
<tr><th>Page</th><th>Location
(e.g., subsection with paragraph/sentence/ Item, table with column/row, or figure)</th><th>Description of Change</th></tr>
<tr><td>10.3-26</td><td>Table 10.3.3-1
Main Steam Supply System Failure Modes and Effects Analysis (Sheet 1 of 3)</td><td>Order of numbering of the following items are changed in the manner shown below: 5 to 8 → combined; labeled as item 2.
<table>
<tr><th>Description of component</th><th>Active Safety function</th><th>Plant operating mode</th><th>Failure mode(s)</th><th>Method of failure detection</th><th>Failure effect on system safety function capability</th></tr>
<tr><td>Main Steam Depressurization Valve (MSDV) NMS-MOV-508A,B,C, D Normally closed, fail as is motor-operated valve</td><td>Provide for controlled removal of reactor decay heat (in conjunction with the EFWS).</td><td>During power operation</td><td>Fails open or fails to close on demand</td><td>Valve position indication on the main control room</td><td>No safety-related impact on plant. Analysis shows no adverse effect assuming larger steam discharge rate than design rate of the valve.</td></tr>
<tr><td></td><td></td><td>Steam Generator Tube Rupture Safe shutdown</td><td>Fails to open on demand</td><td>Valve position indication on the main control room</td><td>No safety-related impact on plant. Valves on intact SG steam lines provide RCS cooling and plant shutdown.</td></tr>
</table>
Editorial: This item is combined for seeing easily. Changed the name of plant condition.
No Revision Bar</td></tr>
<tr><td>10.3-26</td><td>Table 10.3.3-1
Main Steam Supply System Failure Modes and Effects Analysis (Sheet 1 of 3)</td><td>Order of numbering of the following items are changed in the manner shown below: 9 to 12 → combined; labeled as item 3.
<table>
<tr><th>Description of component</th><th>Active Safety function</th><th>Plant operating mode</th><th>Failure mode(s)</th><th>Method of failure detection</th><th>Failure effect on system safety function capability</th></tr>
<tr><td>Main Steam Relief Valve (MSRV) NMS-PCV-465,475,485,495 Normally closed, fail closed air-operated valve</td><td>-</td><td>During power operation</td><td>Fails open or fails to close on demand</td><td>Valve position indication on the main control room</td><td>No safety-related impact on plant. Analysis shows no adverse effect assuming larger steam discharge rate than design rate of the valve.</td></tr>
</table>
Editorial: This item is combined for seeing easily. Changed the name of plant condition.
No Revision Bar</td></tr>
</table>

Table 1 Change List identified "No Revision Bar" (14/59)

<table>
<tr><th>Page</th><th>Location
(e.g., subsection with paragraph/sentence/ Item, table with column/row, or figure)</th><th>Description of Change</th></tr>
<tr><td>10.3-26</td><td>Table 10.3.3-1
Main Steam Supply System Failure Modes and Effects Analysis (Sheet 1 of 3)</td><td>Order of numbering of the following items are changed in the manner shown below: 13 to 16 → combined; labeled as item 4.
<table>
<tr><th>Description of component</th><th>Active Safety function</th><th>Plant operating mode</th><th>Failure mode(s)</th><th>Method of failure detection</th><th>Failure effect on system safety function capability</th></tr>
<tr><td>Main Steam Bypass Isolation Valve (MSBIV) NMS-HCV-3615A,B, C,D Normally closed, fail closed air-operated valve</td><td>Isolates containment.</td><td>Loss of Coolant Accident</td><td>Fails to close on demand</td><td>Valve position indication on the main control room</td><td>No safety-related impact on plant. Containment boundary remains intact with redundancy provided by this valve, SGs and main steam lines.</td></tr>
</table>
Editorial: This item is combined for seeing easily. Changed the name of plant condition.
No Revision Bar</td></tr>
</table>

Table 1 Change List identified "No Revision Bar" (15/59)

<table>
<tr><th>Page</th><th>Location
(e.g., subsection with paragraph/sentence/ Item, table with column/row, or figure)</th><th>Description of Change</th></tr>
<tr><td>10.3-27</td><td>Table 10.3.3-1
Main Steam Supply System Failure Modes and Effects Analysis (Sheet 2 of 3)</td><td>Order of numbering of the following items are changed in the manner shown below: 17 to 20 → combined; labeled as item 5.

<table>
<tr><th>Description of component</th><th>Active Safety function</th><th>Plant operating mode</th><th>Failure mode(s)</th><th>Method of failure detection</th><th>Failure effect on system safety function capability</th></tr>
<tr><td>Main Steam Safety Valve (MSSVs) NMS-VLV-509A,B,C,D NMS-VLV-510A,B,C,D NMS-VLV-511A,B,C,D NMS-VLV-512A,B,C,D NMS-VLV-513A,B,C,D NMS-VLV-514A,B,C,D Normally closed</td><td>Protect each SG from over pressurization.</td><td>During power operation</td><td>Spurious opening or failure to reset after opening</td><td>Valve position indication on the main control room</td><td>No safety-related impact on plant. Analysis shows no adverse effect assuming larger steam discharge rate than design flow rate of the valve.</td></tr>
</table>

Editorial: This item is combined for seeing easily. Changed the name of plant condition.
No Revision Bar</td></tr>
</table>

Table 1 Change List identified "No Revision Bar" (16/59)

<table>
<tr><th>Page</th><th>Location
(e.g., subsection with paragraph/sentence/ Item, table with column/row, or figure)</th><th>Description of Change</th></tr>
<tr><td>10.3-27</td><td>Table 10.3.3-1
Main Steam Supply System Failure Modes and Effects Analysis (Sheet 2 of 3)</td><td>Order of numbering of the following items are changed in the manner shown below: 21 to 24 → combined; labeled as item 6.
<table>
<tr><th>Description of component</th><th>Active Safety function</th><th>Plant operating mode</th><th>Failure mode(s)</th><th>Method of failure detection</th><th>Failure effect on system safety function capability</th></tr>
<tr><td>Main Steam Relief Valve Block Valve (MSRVBV) NMS-MOV-507A,B,C, DNormally opened, fail as is motor-operated valve</td><td>Isolates containment.</td><td>Loss of Coolant Accident</td><td>Fails to close on demand</td><td>Valve position indication on the main control room</td><td>No safety-related impact on plant. Containment boundary remains intact with redundancy provided by this valve, SGs and main steam lines.</td></tr>
</table>
Editorial: This item is combined for seeing easily. Changed the name of plant condition.
No Revision Bar</td></tr>
<tr><td>10.3-27</td><td>Table 10.3.3-1
Main Steam Supply System Failure Modes and Effects Analysis (Sheet 2 of 3)</td><td>Order of numbering of the following items are changed in the manner shown below: 25 to 28 → combined; labeled as item 7.
<table>
<tr><th>Description of component</th><th>Active Safety function</th><th>Plant operating mode</th><th>Failure mode(s)</th><th>Method of failure detection</th><th>Failure effect on system safety function capability</th></tr>
<tr><td>Main Steam Drain Line Isolation valve (MSDIV) NMS-MOV-701A,B,C, D Normally opened, fail as is motor-operated valve.</td><td>Isolates containment.</td><td>Loss of Coolant Accident</td><td>Fails to close on demand</td><td>Valve position indication on the main control room</td><td>No safety-related impact on plant. Containment boundary remains intact with redundancy provided by this valve, SGs and main steam lines.</td></tr>
</table>
Editorial: This item is combined for seeing easily. Changed the name of plant condition.
No Revision Bar</td></tr>
</table>

Table 1 Change List identified "No Revision Bar" (17/59)

<table>
<tr><th>Page</th><th>Location
(e.g., subsection with paragraph/sentence/ Item, table with column/row, or figure)</th><th>Description of Change</th></tr>
<tr><td>10.3-27</td><td>Table 10.3.3-1
Main Steam Supply System Failure Modes and Effects Analysis (Sheet 2 of 3)</td><td>Order of numbering of the following items are changed in the manner shown below: 29 to 32 → combined; labeled as item 8.
<table>
<tr><th>Description of component</th><th>Active Safety function</th><th>Plant operating mode</th><th>Failure mode(s)</th><th>Method of failure detection</th><th>Failure effect on system safety function capability</th></tr>
<tr><td>Steam Generator Blowdown CV Isolation valve SGS-AOV-001A,B,C,D Normally opened, fail closed air-operated valve.</td><td>Isolates SG blowdown. Isolates containment.</td><td>Loss of Non-emergency AC Power
Loss of Nominal Feedwater
Feedwater System Pipe Break
Steam Generator Tube Rupture
Safe shutdown</td><td>Fails to close on demand</td><td>Valve position indication on the main control room</td><td>No safety-related impact on plant. Isolation is achieved by redundant steam generator blowdown isolation valve (SGS-AOV-002A,B,C,D).</td></tr>
<tr><td></td><td></td><td>Loss of Coolant Accident</td><td>Fails to close on demand</td><td>Valve position indication on the main control room</td><td>No safety-related impact on plant. Containment boundary remains intact with redundancy provided by this valve, SGs and main steam lines.</td></tr>
</table>
Editorial: This item is combined for seeing easily. Changed the name of plant condition.
No Revision Bar</td></tr>
</table>

Table 1 Change List identified "No Revision Bar" (18/59)

<table>
<tr><th>Page</th><th>Location
(e.g., subsection with paragraph/sentence/ Item, table with column/row, or figure)</th><th>Description of Change</th></tr>
<tr><td>10.3-28</td><td>Table 10.3.3-1
Main Steam Supply System Failure Modes and Effects Analysis (Sheet 3 of 3)</td><td>Order of numbering of the following items are changed in the manner shown below: 33 to 36 → combined; labeled as item 9.

<table>
<tr><th>Description of component</th><th>Active Safety function</th><th>Plant operating mode</th><th>Failure mode(s)</th><th>Method of failure detection</th><th>Failure effect on system safety function capability</th></tr>
<tr><td>Steam Generator Blowdown Isolation Valve SGS-AOV-002A,B,C,D Normally opened, fail closed air-operated valve.</td><td>Isolates SG blowdown.</td><td>Loss of Non-emergency AC Power Loss of Nominal Feedwater Feedwater System Pipe Break Steam Generator Tube Rupture Safe shutdown</td><td>Fails to close on demand</td><td>Valve position indication on the main control room</td><td>No safety-related impact on plant. Isolation is achieved by redundant steam generator blowdown CV isolation valve (SGS-AOV-001A,B,C,D).</td></tr>
</table>

Editorial: This item is combined for seeing easily. Changed the name of plant condition.

No Revision Bar</td></tr>
</table>

Table 1 Change List identified "No Revision Bar" (19/59)

<table>
<tr><th>Page</th><th>Location
(e.g., subsection with paragraph/sentence/ Item, table with column/row, or figure)</th><th>Description of Change</th></tr>
<tr><td>10.3-28</td><td>Table 10.3.3-1
Main Steam Supply System Failure Modes and Effects Analysis (Sheet 3 of 3)</td><td>Order of numbering of the following items are changed in the manner shown below: 37 to 40 → combined; labeled as item 10.
<table>
<tr><th>Description of component</th><th>Active Safety function</th><th>Plant operating mode</th><th>Failure mode(s)</th><th>Method of failure detection</th><th>Failure effect on system safety function capability</th></tr>
<tr><td>Steam Generator Blowdown Sample Isolation Valve SGS-AOV-031A,B,C,D Normally opened, fail closed air-operated valve.</td><td>Isolates SG blowdown. Isolates containment.</td><td>Loss of Non-emergency AC Power
Loss of Nominal Feedwater
Feedwater System Pipe Break
Steam Generator Tube Rupture
Safe shutdown</td><td>Fails to close on demand</td><td>Valve position indication on the main control room</td><td>No safety-related impact on plant.
The size of SG blowdown sample line is very small that no safety-related impact on plat.</td></tr>
<tr><td></td><td></td><td>Loss of Coolant Accident</td><td>Fails to close on demand</td><td>Valve position indication on the main control room</td><td>No safety-related impact on plant.
Containment boundary remains intact with redundancy provided by this valve, SGs and main steam lines.</td></tr>
</table>
Editorial: This item is combined for seeing easily. Changed the name of plant condition.
No Revision Bar</td></tr>
<tr><td>10.3-36</td><td>Figure 10.3-1 Main Steam Supply System Piping and Instrumentation Diagram (1/4)</td><td>Corrected this figure.
Technical: Minor changes are added.
No Revision Bar</td></tr>
<tr><td>10.3-38</td><td>Figure 10.3-3 Main Steam Supply System Piping and Instrumentation Diagram (3/4)</td><td>Corrected this figure.
Technical: Minor changes are added.
No Revision Bar</td></tr>
<tr><td>10.3-39</td><td>Figure 10.3-4 Main Steam Supply System Piping and Instrumentation Diagram (4/4)</td><td>Corrected this figure.
Technical: Minor changes are added.
No Revision Bar</td></tr>
</table>

Table 1 Change List identified "No Revision Bar" (20/59)

Page	Location (e.g., subsection with paragraph/sentence/ Item, table with column/row, or figure)	Description of Change
10.4-1	10.4	Editorial Added the title sentence "10.4 Other Features of Steam and Power Conversion System". ***No Revision Bar***
10.4-2	10.4.1.2.1,seventh paragraph	Editorial Replaced "The perforated" with "Perforated". ***No Revision Bar***
10.4-5 10.4-6	10.4.2.2.1, second Paragraph	Editorial Replaced "MCES" with "condenser shells" in two locations. ***No Revision Bar***
10.4-13	Figure 10.4.3-1	Editorial Replaced "AUX TEAM" with "AUX STEAM". ***No Revision Bar***
10.4-13	Figure 10.4.3-1	Editorial Changed the steam supply valve symbol from "Closed valve" to "Open valve". ***No Revision Bar***
10.4-13	Figure 10.4.3-1	Editorial Changed the title of the figure to "Gland Seal System Piping and Instrumentation Diagram". ***No Revision Bar***
10.4-14	10.4.4.1.2 Non-safety Power Generation Design Bases	Changed "main steam flow" to "rated power steam flow" Editorial: Matched to the description of 10.3. ***No Revision Bar***
10.4-18	10.4.5.1.2 second sentence.	Editorial Changed "LOOP" to "loss of offsite power (LOOP)". ***No Revision Bar***
10.4-18	10.4.5.2.1 first para.	Editorial Changed "Combined License Application will determine" to "COL Applicant is to determine". ***No Revision Bar***

Table 1 Change List identified "No Revision Bar" (21/59)

Page	Location (e.g., subsection with paragraph/sentence/ Item, table with column/row, or figure)	Description of Change
10.4-18	10.4.5.2.1 first para.	Editorial Added "for the CWS including makeup water and blowdown" after design parameters. ***No Revision Bar***
10.4-18	10.4.5.2.1 fifth para.	Editorial Change "will not" to "does not". ***No Revision Bar***
10.4-19	10.4.5.2.1 eighth para.	Editorial Changed "a concrete intake canal" to "an intake manifold concrete pipe". ***No Revision Bar***
10.4-19	10.4.5.2.1 ninth para.	Editorial Changed "non-essential service water" to "non-ESW". ***No Revision Bar***
10.4-19	10.4.5.2.1 ninth para.	Editorial Changed "CWS cooling tower" to "CTW". ***No Revision Bar***
10.4-19	10.4.5.2.2 fifth bullet.	Editorial Added "system" after " CTW make up water and blowdown ". ***No Revision Bar***
10.4-20	10.4.5.2.2.6 first para. first sentence	Editorial Change "will be" to "is". ***No Revision Bar***
10.4-20	10.4.5.2.2.6 first para. second sentence	Editorial Change "will be" to "are". ***No Revision Bar***
10.4-20	10.4.5.2.2.6 Second para. second and third sentence	Editorial Transferred the description "Control valves are provided for the regulation of cooling tower blowdown and makeup." to last sentence of second paragraph. ***No Revision Bar***
10.4-21	10.4.5.3.2 third para. first sentence	Editorial Change "makeup pump" to "makeup water pump". ***No Revision Bar***

Table 1 Change List identified "No Revision Bar" (22/59)

Page	Location (e.g., subsection with paragraph/sentence/ Item, table with column/row, or figure)	Description of Change
10.4-22	10.4.5.3.4.1 second para. first sentence	Editorial Change "will discharge" to " discharges ". ***No Revision Bar***
10.4-22	10.4.5.3.4.1 second para. first sentence	Editorial Change "could rise" to " can rise". ***No Revision Bar***
10.4-22	10.4.5.3.4.1 second para. second sentence	Editorial Change "will carry" to "carries ". ***No Revision Bar***
10.4-22	10.4.5.3.4.1 fourth para. second sentence	Editorial Change "will not" to "does not". ***No Revision Bar***
10.4-23	10.4.5.6 eleventh para.	Editorial Change "will result" to "result". ***No Revision Bar***
10.4-23	10.4.5.6 Twelfth para.	Editorial Added description regarding level switches. ***No Revision Bar***
10.4-24 through 10.4-26	Table 10.4.5-1, Sheet 1 through 3	Editorial Changed "Design Parameters For Major Components" to "Design Parameters for Major Components" of table title. ***No Revision Bar***
10.4-24	Table 10.4.5-1,	Editorial Changed "Ambient Design Temperature" to "Ambient design temperature". ***No Revision Bar***
10.4-24	Table 10.4.5-1,	Editorial Changed "Design wet bulb temperature, °F" to "Design wet bulb temperature, (°F)". ***No Revision Bar***
10.4-24	Table 10.4.5-1,	Editorial Changed "Quantity" to "Number of pumps" of Circulating water pumps. ***No Revision Bar***

Table 1 Change List identified "No Revision Bar" (23/59)

Page	Location (e.g., subsection with paragraph/sentence/ Item, table with column/row, or figure)	Description of Change
10.4-24	Table 10.4.5-1,	Editorial Changed "Circulating water Pump (per pump)" to "Circulating water pumps". ***No Revision Bar***
10.4-24	Table 10.4.5-1,	Editorial Changed "Mechanical draft Cooling Towers" to " Mechanical draft cooling towers" ***No Revision Bar***
10.4-24	Table 10.4.5-1,	Editorial Changed "Quantity" to "Number of towers" of Mechanical draft cooling tower . ***No Revision Bar***
10.4-24	Table 10.4.5-1,	Editorial Changed "CTW Approach" to "CTW design approach temperature" ***No Revision Bar***
10.4-24	Table 10.4.5-1,	Editorial Moved design flowrate (gpm) : 1,290,720 plus 27,000 (for Non essential service water) from table 10.4.5-1 Sheet 2of 3 to Sheet 1 of 3. ***No Revision Bar***
10.4-25	Table 10.4.5-1,	Editorial Changed " Blowdown Pumps " to " Blowdown pumps " ***No Revision Bar***
10.4-26	Table 10.4.5-1,	Editorial Changed " Piping and Components Design Data " to " Piping and components design data " ***No Revision Bar***
10.4-26	Table 10.4.5-1,	Editorial Changed " Design pressure/Temperature, psig/°F" to " Design pressure/temperature, (psig/°F)". ***No Revision Bar***
10.4-27	Figure 10.4.5-1,	Editorial Change dash line to full line. ***No Revision Bar***

Table 1 Change List identified "No Revision Bar" (24/59)

Page	Location (e.g., subsection with paragraph/sentence/ Item, table with column/row, or figure)	Description of Change
10.4-28 through 10.4-31		Technical Added description of prefilter. ***No Revision Bar***
10.4-28	10.4.6.1.2 fourth bullet	Editorial Change "will process" to "processes". ***No Revision Bar***
10.4-28	10.4.6.1.2 fourth bullet	Editorial Deleted "all condensate during plant start up (up to 50% of rated power), and". ***No Revision Bar***
10.4-28	10.4.6.1.2 fourth bullet	Editorial Added "start up and" ***No Revision Bar***
10.4-28	10.4.6.2.1 third para.	Editorial Change "The flow rates to each condensate..." to " The flow rates to condensate...". ***No Revision Bar***
10.4-29	10.4.6.2.2 second para.	Editorial Deleted following sentence because of too detail. "Leachable sulfur of the rubber lining is less than 20ppb." ***No Revision Bar***
10.4-29	10.4.6.2.2 second para.	Editorial Changed "(demineralizers) are in the CPS." to "(demineralizers) are included in the CPS." ***No Revision Bar***
10.4-29	10.4.6.2.3.1 first para.	Editorial Deleted "up to 50% of rated power". ***No Revision Bar***
10.4-29	10.4.6.2.3.1 first para.	Editorial Changed "startup duration of the plant" to "The duration of the plant startup". ***No Revision Bar***

Table 1 Change List identified "No Revision Bar" (25/59)

Page	Location (e.g., subsection with paragraph/sentence/ Item, table with column/row, or figure)	Description of Change
10.4-29	10.4.6.2.3.1 second para. first sentence	Editorial Change "will be" to "is". ***No Revision Bar***
10.4-29	10.4.6.2.3.1 second para. second sentence	Editorial Change "will be" to "is". ***No Revision Bar***
10.4-30	10.4.6.2.3.1 third para. fourth sentence	Editorial Change "will normally be" to "is normally". ***No Revision Bar***
10.4-30	10.4.6.2.3.1 third para. fourth sentence	Editorial Change "will not require" to "does not require". ***No Revision Bar***
10.4-30	10.4.6.2.3.1 third para. fifth sentence	Editorial Change "will be" to "is". ***No Revision Bar***
10.4-30	10.4.6.2.3.1 third para. sixth sentence	Editorial Change "will be" to "is". ***No Revision Bar***
10.4-30	10.4.6.2.3.2. first sentence	Editorial Change "will go into" to "goes into". ***No Revision Bar***
10.4-30	10.4.6.2.3.2. first sentence	Editorial Change "capable to maintain" to "capable of maintaining". ***No Revision Bar***
10.4-30	10.4.6.2.3.2. third sentence	Editorial Change "will be changed" to "is changed". ***No Revision Bar***
10.4-30	10.4.6.5 first para.	Editorial Added "chloride" after sodium. ***No Revision Bar***
10.4-30 through 10.4-31	10.4.6.5	Editorial Change condensate polisher to CPS ***No Revision Bar***

Table 1 Change List identified "No Revision Bar" (26/59)

Page	Location (e.g., subsection with paragraph/sentence/ Item, table with column/row, or figure)	Description of Change
10.4-30	10.4.6.5 third para.	Editorial Change "The affected prefilter and..." to "The affected prefilter with...". ***No Revision Bar***
10.4-30	10.4.6.5 fifth para.	Editorial Change "during: (1)" to ": (1) during". ***No Revision Bar***
10.4-30	10.4.6.5 sixth para. first sentense	Editorial Change "spent resin holding vessel level will be measured" to "the spent resin holding vessel level are measured". ***No Revision Bar***
10.4-30	10.4.6.5 sixth para. second sentense	Editorial Change "will be" to "are". ***No Revision Bar***
10.4-37	10.4.7.1.2 Safety Design Basis	Changed "after a safe-shutdown earthquake (SSE)" to "during and after a safe-shutdown earthquake (SSE)" Technical: The description is match to the definition of Chapter 3. ***No Revision Bar***

Table 1 Change List identified "No Revision Bar" (27/59)

<table>
<tr><th>Page</th><th>Location
(e.g., subsection with paragraph/sentence/ Item, table with column/row, or figure)</th><th>Description of Change</th></tr>
<tr><td>10.4-56</td><td>Table 10.4.7-3
Condensate and Feedwater System Failure Modes and Effects Analysis</td><td>Item 1 is changed as shown below.
<table>
<tr><th>Component</th><th>Failure Mode</th><th>Plant Condition</th><th>Effect on System Operation</th><th>Failure Detection</th></tr>
<tr><td>Main Feedwater Isolation Valve (MFIV) NFS-VLV-512A,B,C,D normally open</td><td>Fails closed or fails to open on demand.</td><td>During power operation</td><td>No safety-related effect causes since: No adverse effect on integrities of the reactor or RCPB. Plant can remain in hot standby condition or go to cold shutdown condition.</td><td>Valve position Indication on the main control room</td></tr>
<tr><td></td><td>Solenoid valve for actuating MFIV fails to open on demand.</td><td>Excessive Feedwater Flow
Steam System Piping Failure
Steam Generator Tube Rupture
Loss of Coolant Accident</td><td>No safety-related effect causes since: Main Feedwater Isolation Valve is operated by a separate solenoid valves with redundancy and different class 1E power bus. Failure of either train of solenoid valves does not impair isolation function of Main Feedwater Isolation Valve.</td><td>Valve testing Valve testing is done in accordance with the Inservice Testing Program. If there are any problems with the solenoid valve, the failure is detected during the testing.</td></tr>
</table>
Editorial: Changed the name of plant condition.
No Revision Bar</td></tr>
<tr><td>10.4-56</td><td>Table 10.4.7-3
Condensate and Feedwater System Failure Modes and Effects Analysis</td><td>Item 2 is changed as shown below.
<table>
<tr><th>Component</th><th>Failure Mode</th><th>Plant Condition</th><th>Effect on System Operation</th><th>Failure Detection</th></tr>
<tr><td>Main Feedwater Regulation Valve (MFRV) NFS-FCV-460,470,480,490 Normally adjusted to open</td><td>Fails open fully on demand</td><td>During power operation</td><td>No safety-related effect causes since: No adverse effect on integrities of the reactor or RCPB. Plant can remain in hot standby condition or go to cold shutdown condition.</td><td>Valve position Indication on the main control room</td></tr>
</table>
Editorial: Changed the name of plant condition.
No Revision Bar</td></tr>
<tr><td>10.4-56</td><td>Table 10.4.7-3
Condensate and Feedwater System Failure Modes and Effects Analysis</td><td>Item 3 (Main Feedwater Bypass Regulation Valve) is deleted.
Technical: This valve is not assumed as malfunction in safety analysis.
No Revision Bar</td></tr>
</table>

Table 1 Change List identified "No Revision Bar" (28/59)

Page	Location (e.g., subsection with paragraph/sentence/ Item, table with column/row, or figure)	Description of Change
10.4-57	Figure 10.4.7-1 Condensate and Feedwater System Piping and Instrumentation Diagram (1/4)	Corrected this figure. Technical: Minor changes are added. ***No Revision Bar***
10.4-62	10.4.8.1.2 Non-safety Power Generation Design Bases The 1st bullet	Editorial: Clarify scope of statement Added ", plant start up operation and abnormal water chemistry conditions at rated power operation" to the end of the sentence of 1st bullet. ***No Revision Bar***
10.4-63	10.4.8.2.1 General Description The 3rd paragraph of the page	Editorial: Clarify scope of statement Replaced " abnormal water conditions " with " abnormal water chemistry conditions ". ***No Revision Bar***
10.4-64	10.4.8.2.1 General Description The 4th paragraph of the page	Editorial: Clarify scope of statement Replaced " blowdown liquid flows directly to the condenser " with " blowdown liquid flows to the WWS prior to discharge or to the condenser ". Added "of MSR at rated power" after "At 1%". ***No Revision Bar***
10.4-66	10.4.8.2.2.4 Steam Generator Drain The 1st paragraph	Editorial: Clarify scope of statement Added " or to the WWS " to the end of the 1st paragraph last sentence. ***No Revision Bar***
10.4-66	10.4.8.2.2.4 Steam Generator Drain The 1st paragraph	Editorial: Clarify scope of statement Added "The COL applicant is to describe the nitrogen or equivalent system design for Steam Generator drain." to the end of the 1st paragraph 2nd sentence. ***No Revision Bar***

Table 1 Change List identified "No Revision Bar" (29/59)

Page	Location (e.g., subsection with paragraph/sentence/ Item, table with column/row, or figure)	Description of Change
10.4-66	10.4.8.2.2.5 Abnormal Operation (3) Abnormal water chemistry condition	Editorial: Clarify scope of statement Replaced "at the outlet of the SG blowdown demineralizers lines increase to high-high level, blowdown water is diverted to the condenser. When the blowdown water chemistry is unacceptable, blowdown water is diverted to WWS." with "at the outlet of the SG blowdown demineralizers increase beyond the predetermined limit, blowdown water is diverted to the condenser of to the WWS." ***No Revision Bar***
10.4-67	10.4.8.2.3 Component Description Item (1)	Editorial: Clarify scope of statement Replaced " pressure " with " pressure and temperature ". ***No Revision Bar***
10.4-71	Table.10.4.8-1 SG blowdown flash tank	Editorial: Clarify scope of statement Replaced " Maximum steaming rate" With "of MSR at rated power". ***No Revision Bar***
10.4-74 and 10.4-75	Figure.10.4.8-1 and Figure.10.4.8-2 Steam Generator Blowdown System Flow Diagram	Editorial: Clarify scope of statement Changed the Figure title " Steam Generator Blowdown System Flow Diagram" to "Steam Generator Blowdown System Piping and Instrumentation Diagram". ***No Revision Bar***
10.4-90	Table 10.4.9-1 Emergency Feedwater System Component Design Parameters (Sheet 1 of 3)	Delete "NPSH required at maximum operating flow (ft)". Technical: This value is due to pump vender. ***No Revision Bar***

Table 1 Change List identified "No Revision Bar" (30/59)

Page	Location (e.g., subsection with paragraph/sentence/ Item, table with column/row, or figure)	Description of Change
10.4-90	Table 10.4.9-1 Emergency Feedwater System Component Design Parameters (Sheet 1 of 3)	Changed minimum flow rate to "50 gpm". Technical: This value is due to pump vender. The allowable maximum mini-flow rate is 50 gpm. ***No Revision Bar***
10.4-91	Table 10.4.9-1 Emergency Feedwater System Component Design Parameters (Sheet 2 of 3)	Delete "NPSH required at maximum operating flow (ft)". Technical: This value is due to pump vender. ***No Revision Bar***
10.4-91	Table 10.4.9-1 Emergency Feedwater System Component Design Parameters (Sheet 2 of 3)	Delete "Driver (Turbine)". Technical: The values related Driver (Turbine) is due to pump vender. ***No Revision Bar***
10.4-92	Table 10.4.9-1 Emergency Feedwater System Component Design Parameters (Sheet 3 of 3)	Changed "Pit inside dimensions (ft)" to "Pit inside dimensions, L(ft)×W(ft)×H(ft)" Editorial: The definition of the length is clarified. ***No Revision Bar***

Table 1 Change List identified "No Revision Bar" (31/59)

<table>
<tr><th>Page</th><th>Location
(e.g., subsection with paragraph/sentence/ Item, table with column/row, or figure)</th><th>Description of Change</th></tr>
<tr><td>10.4-94</td><td>Table 10.4.9-4
Emergency Feedwater System Failure Modes and Effects Analysis (Sheet 1 of 3)</td><td>Description of Emergency Feedwater Pump is changed as shown below.
<table>
<tr><th>Components</th><th>Failure Mode</th><th>Plant Condition</th><th>Effect on System Operation</th><th>Ffailure detection</th><th>Remarks</th></tr>
<tr><td>Emergency Feedwater Pump

EFS-RPP-001A,D(Turbine-driben)
EFS-RPP-001B,C(Motor-driven)
Normally stopped</td><td>Failure to start on demand</td><td>Loss of Non-emergency AC power
Loss of Nominal Feedwater
Small Break Loss of Coolant Accident
Safe Shutdown

Feedwater System Pipe Break
Steam Generator Tube Rupture
Safe Shutdown</td><td>No effect on safety-related function since: The three remaining EFW pumps are sufficient for providing EFW to three SGs.

No effect on safety-related function since: Each EFW line is provided with redundant isolation valves that automatically close to isolate the affected SG. This permits the EFW supply to be provided to the three intact SGs by three pumps following the event. In addition, two pumps are available for supplying EFW to the two intact SGs assuming one pump failure.</td><td>EFW pump operating information: Flow, discharge pressure and pump motor current in MCR
Circuit breaker close position light in MCR

EFW pump operating information: Flow, discharge pressure and pump motor current in MCR
Circuit breaker close position light in MCR</td><td>The left columns describe the non-OLM case where the EFWS is separated into four trains (EFW pump discharge tie line is closed). For OLM: No effect on safety-related function since at least two pumps are available to operate and at least three SGs can be supplied with EFW by opening the EFW pump discharge tie line during all modes of plant operation assuming that one pump is not available due to maintenance.</td></tr>
</table>
Editorial: The item M/D-EFW pump and T/D-EFW pump are combined as Emergency feedwater pump. Changed the name of plant condition. Changed the number of available pump quantities from 2 to 3 in the case of OLM at Remarks.
No Revision Bar</td></tr>
</table>

Table 1 Change List identified "No Revision Bar" (32/59)

<table>
<tr><th>Page</th><th>Location
(e.g., subsection with paragraph/sentence/ Item, table with column/row, or figure)</th><th>Description of Change</th></tr>
<tr><td>10.4.9-95</td><td>Table 10.4.9-4
Emergency Feedwater System Failure Modes and Effects Analysis (Sheet 2 of 3)</td><td>Description of T/D-EFW pump actuation valve is changed as shown below.
<table>
<tr><th>Components</th><th>Failure Mode</th><th>Plant Condition</th><th>Effect on System Operation</th><th>Ffailure detection</th><th>Remarks</th></tr>
<tr><td>T/D-EFW pump actuation valve

EFS-MOV-103A,D normally closed, dc MOVs</td><td>Failure to open on demand</td><td>Loss of Non-emergency AC power
Loss of Nominal Feedwater
Small Break Loss of Coolant Accident
Safe Shutdown</td><td>No effect on safety-related function since: The three remaining EFW pumps are sufficient for providing EFW to three SGs.</td><td>Valve information: Valve open/close position indication in MCR</td><td rowspan="2">The left columns describe the non-OLM case where the EFWS is separated into four trains (EFW pump discharge tie line is closed).
For OLM: No effect on safety-related function since at least two pumps are available to operate and at least three SGs can be supplied with EFW by opening the EFW pump discharge tie line during all modes of plant operation assuming that one pump is not available due to maintenance.</td></tr>
<tr><td></td><td></td><td>Feedwater System Pipe Break
Steam Generator Tube Rupture
Safe Shutdown</td><td>No effect on safety-related function since: Each EFW line is provided with redundant isolation valves that automatically close to isolate the affected SG. This permits the EFW supply to be provided to the three intact SGs by three pumps following the event. In addition, two pumps are available for supplying EFW to the two intact SGs assuming one T/D-EFW pump actuation valve failure.</td><td>Valve information: Valve open/close position indication in MCR</td></tr>
</table>
Editorial: Changed the name of plant condition. Changed the number of available pump quantities from 2 to 3 in the case of OLM at Remarks.
No Revision Bar</td></tr>
</table>

Table 1 Change List identified "No Revision Bar" (33/59)

<table>
<tr><th>Page</th><th>Location
(e.g., subsection with paragraph/sentence/ Item, table with column/row, or figure)</th><th>Description of Change</th></tr>
<tr><td>10.4-95</td><td>Table 10.4.9-4
Emergency Feedwater System Failure Modes and Effects Analysis (Sheet 2 of 3)</td><td>Description of EFW control valve is changed as shown below.
<table>
<tr><th>Components</th><th>Failure Mode</th><th>Plant Condition</th><th>Effect on System Operation</th><th>Ffailure detection</th><th>Remarks</th></tr>
<tr><td>EFW control valve
EFS-MOV-017A,B,C,D normally opened, dc MOVs</td><td>Failure to close on demand</td><td>Inadvertent secondary depressurization Feedwater System Pipe Break Steam System Piping Failure Steam Generator Tube Rupture</td><td>No effect on safety-related function since:
The series of this control valves and the isolation valves (EFS-MOV-019A,B,C,D) with redundancy can stop EFW supply to the affected SG (automatically closes upon receipt of signals).</td><td>Valve information: Valve open/close position indication in MCR</td><td></td></tr>
</table>
Editorial: Changed the name of plant condition.
No Revision Bar</td></tr>
<tr><td>10.4-96</td><td>Table 10.4.9-4
Emergency Feedwater System Failure Modes and Effects Analysis (Sheet 3 of 3)</td><td>Description of EFW isolation valve is changed as shown below.
<table>
<tr><th>Components</th><th>Failure Mode</th><th>Plant Condition</th><th>Effect on System Operation</th><th>Ffailure detection</th><th>Remarks</th></tr>
<tr><td>EFW isolation valve
EFS-MOV-019A,B,C,D normally opened, dc MOVs These valves are normally positioned to limit the maximum EFW flow</td><td>Failure to close on demand</td><td>Inadvertent secondary depressurization Feedwater System Pipe Break Steam System Piping Failure Steam Generator Tube Rupture</td><td>No effect on safety-related function since:
The series of this isolation valves and the control valves (EFS-MOV-017A,B,C,D) with redundancy can stop EFW supply to the affected SG (automatically closes upon receipt of signals).</td><td>Valve information: Valve open/close position indication in MCR</td><td></td></tr>
</table>
Editorial: Changed the name of plant condition.
No Revision Bar</td></tr>
</table>

Table 1 Change List identified "No Revision Bar" (34/59)

<table>
<tr><th>Page</th><th>Location
(e.g., subsection with paragraph/sentence/ Item, table with column/row, or figure)</th><th>Description of Change</th></tr>
<tr><td>10.4-96</td><td>Table 10.4.9-4
Emergency Feedwater System Failure Modes and Effects Analysis (Sheet 3 of 3)</td><td>Description of T/D-EFW main steam line steam isolation valve is changed as shown below.
<table>
<tr><th>Components</th><th>Failure Mode</th><th>Plant Condition</th><th>Effect on System Operation</th><th>Ffailure detection</th><th>Remarks</th></tr>
<tr><td>T/D-EFW pump main steam line steam isolation valve
EFS-MOV-101A,B,C,D normally opened, dc MOVs</td><td>Failure to close on demand</td><td>Loss of Coolant Accident</td><td>No effect on safety-related function since: Containment boundary remains intact with redundancy provided by this valve, SGs and main steam lines.</td><td>Valve information : Valve open/close position indication in MCR</td><td></td></tr>
<tr><td></td><td>Failure to close on demand</td><td>Steam Generator Tube Rupture</td><td>No effect on safety-related function since: Isolation of affected SG is achieved by redundant T/D-EFW pump actuation valves (EFS-MOV-103A,D).</td><td>Valve information : Valve open/close position indication in MCR</td><td></td></tr>
</table>
Editorial: Changed the name of plant condition.
No Revision Bar</td></tr>
<tr><td>10.4-97</td><td>Table 10.4.9-5
Emergency Feedwater System Summary of Indication and Controls</td><td>Deleted "EFW pit water temperature".
Technical: This channel is not indicated to the RSC.
No Revision Bar</td></tr>
<tr><td>10.4-98</td><td>Table 10.4.9-6 Emergency Feedwater System Electric Power Sources</td><td>Electric Train of EFS-MOV-101B is changed to Class 1E dc bus "A".
Editorial: Typing error is corrected.
No Revision Bar</td></tr>
</table>

Table 1 Change List identified "No Revision Bar" (35/59)

Page	Location (e.g., subsection with paragraph/sentence/ Item, table with column/row, or figure)	Description of Change
10.4-98	Table 10.4.9-6 Emergency Feedwater System Electric Power Sources	Electric Train of EFS-MOV-101C is changed to Class 1E dc bus "D". Editorial: Typing error is corrected. ***No Revision Bar***
10.4-99	Figure 10.4.9-1 Emergency Feedwater System Piping and Instrumentation Diagram (1/2)	Corrected this figure. Technical: Minor changes are added. ***No Revision Bar***
10.4-100	Figure 10.4.9-2 Emergency Feedwater System Piping and Instrumentation Diagram (2/2)	Corrected this figure. Technical: Minor changes are added. ***No Revision Bar***
10.4-101 through 10.4-107		Technical Change ammonia to pH controller. ***No Revision Bar***
10.4-101 through 10.4-107		Technical Change hydrazine to oxygen scavenger ***No Revision Bar***
10.4-101 through 10.4-107		Editorial Change injection point from "feedwater booster pump suction" to "deaerator" ***No Revision Bar***
10.4-101 through 10.4-107		Editorial Change "layup operation" to "layup" ***No Revision Bar***
10.4-101 through 10.4-107		Editorial Change "condensate polisher" to "CPS" ***No Revision Bar***
10.4-101 through 10.4-107		Editorial Change "normal operation" to "continuous operation" ***No Revision Bar***

Table 1 Change List identified "No Revision Bar" (36/59)

Page	Location (e.g., subsection with paragraph/sentence/ Item, table with column/row, or figure)	Description of Change
10.4-101	10.4.10, first para.	Editorial Changed "will be maintained" to "is maintained" ***No Revision Bar***
10.4.101	10.4.10, first para.	Technical Change "with ammonia (or equivalent ph controller) " to "with ph controller" ***No Revision Bar***
10.4-101	10.4.10, first para.	Editorial Changed "will be removed" to "is removed" ***No Revision Bar***
10.4-101	10.4.10, first para.	Technical Changed "by hydrazine (or equivalent oxygen scavenger) " to "by oxygen scavenger" ***No Revision Bar***
10.4-101	10.4.10, third para.	Editorial Changed "will be injected" to "are injected" ***No Revision Bar***
10.4-101	10.4.10, fourth para.	Editorial Changed "will be injected" to "are injected" ***No Revision Bar***
10.4-101	10.4.10, fifth para.	Technical Add " bulk chemical system" ***No Revision Bar***
10.4-101	10.4.10, fifth para.	Editorial Change "The SCIS does not include sampling systems, which are covered in Subsection 9.3.2." to "The sampling system related to the SCIS is covered in Subsection 9.3.2.". ***No Revision Bar***
10.4-101	10.4.10, fifrth para.	Editorial Delete " Also, bulk chemical storage tanks and associated transfer pumps that transfer the chemicals to the SCIS day tanks are not part of the SCIS." ***No Revision Bar***

Table 1 Change List identified "No Revision Bar" (37/59)

Page	Location (e.g., subsection with paragraph/sentence/ Item, table with column/row, or figure)	Description of Change
10.4-101	10.4.10.1.2, second para.	Editorial Changed "will be injected" to "is injected" ***No Revision Bar***
10.4-101	10.4.10.1.2, second para.	Editorial Delete " , while the condensate polishing system (CPS) is offline. During startup, cleanup and abnormal conditions, e.g. condenser tube leak operation, the CPS will be used and pH will be maintained at approximately 9.2.." ***No Revision Bar***
10.4-101	10.4.10.1.2, second para.	Editorial Changed "will be maintained" to "are maintained" ***No Revision Bar***
10.4-101	10.4.10.1.2, second para.	Editorial Changed "will be followed" to "is followed" ***No Revision Bar***
10.4-101	10.4.10.1.2, fourth para.	Editorial Delete " The specific design criteria and objectives were developed for the SCIS from the "EPRI ALWR Utility Requirements Document" (EPRI URD) (Reference 10.4-19) to ensure that the SCIS performs in a reliable manner. ***No Revision Bar***
10.4-102	10.4.10.2.1, second para.	Technical Change "...consists two sub-systems" to "...consists of bulk chemical subsystem and two chemical injection sub-systems" ***No Revision Bar***
10.4-102	10.4.10.2.1, second para.	Editorial Add "chemical injection". ***No Revision Bar***
10.4-102	10.4.10.2.1, second para.	Editorial Deleted detail description such as equipment specification. ***No Revision Bar***

Table 1 Change List identified "No Revision Bar" (38/59)

Page	Location (e.g., subsection with paragraph/sentence/ Item, table with column/row, or figure)	Description of Change
10.4-102	10.4.10.2.1, third para.	Editorial Changed "will be injected" to "are injected" ***No Revision Bar***
10.4-102	10.4.10.2.1, fouth para.	Editorial Added "mainly" ***No Revision Bar***
10.4-102	10.4.10.2.1, fouth para.	Editorial Deleted "and removed by the SGBD demineralizer and the CPS when in use." ***No Revision Bar***
10.4-102	10.4.10.2.1, fifth para.	Editorial Deleted "Hydrazine levels also drop in the deaerator due to reaction with oxygen and thermal conversion of hydrazine to ammonia." ***No Revision Bar***
10.4-102	10.4.10.2.1, sixth para.	Editorial Changed "will be injected" to "are injected" ***No Revision Bar***
10.4-102	10.4.10.2.1, seventh para.	Editorial Change "same water chemistry as during power operation; i.e. a residual hydrazine level and pH level during layup should not drop below the power operation pH level." to " water purity to prevent affecting normal operation" ***No Revision Bar***
10.4-102	10.4.10.2.1, eighth para.	Editorial Changed "will send" to "send" ***No Revision Bar***
10.4-102	10.4.10.2.1, eighth para.	Editorial Changed "will inject" to "inject" ***No Revision Bar***
10.4-102	10.4.10.2.1, tenth para.	Technical Added ", except the bulk chemical system which is located outdoors" ***No Revision Bar***

Table 1 Change List identified "No Revision Bar" (39/59)

Page	Location (e.g., subsection with paragraph/sentence/ Item, table with column/row, or figure)	Description of Change
10.4-103	10.4.10.2.2.1, first para.	Technical Added " In the US-APWR, morpholine and dimethylamine are used as pH controllers during continuous operation. In addition, ammonia is used during layup. Each pH controller has one addition tank with an agitator." ***No Revision Bar***
10.4-103	10.4.10.2.2.1, first para.	Editorial Deleted detail description such as equipment specification. ***No Revision Bar***
10.4-103	10.4.10.2.2.1, first para.	Technical Change "from a bulk storage tank" to "from the bulk chemical system". ***No Revision Bar***
10.4-103	10.4.10.2.2.2, first para.	Technical Added " In the US-APWR, hydrazine is used as oxygen scavenger." ***No Revision Bar***
10.4-103	10.4.10.2.2.2, first para.	Editorial Deleted detail description such as equipment specification. ***No Revision Bar***
10.4-103	10.4.10.2.2.2, first para.	Editorial Changed "... tank is in the SCIS" to "... tank is included in the SCIS". ***No Revision Bar***
10.4-103	10.4.10.2.2.2, first para.	Technical Change "from a bulk storage tank" to "from the bulk chemical system". ***No Revision Bar***
10.4-103	10.4.10.2.2.3, first para.	Technical Change ammonia basis to morpholine and DMA basis. ***No Revision Bar***

Table 1 Change List identified "No Revision Bar" (40/59)

Page	Location (e.g., subsection with paragraph/sentence/ Item, table with column/row, or figure)	Description of Change
10.4-103	10.4.10.2.2.3, first para.	Editorial Changed "... operation are in the SCIS" to "... operation are provided in the SCIS". ***No Revision Bar***
10.4-103	10.4.10.2.2.4, first para.	Editorial Changed "... controllers is in the SCIS" to "... controllers is included in the SCIS". ***No Revision Bar***
10.4-103	10.4.10.2.2.4, second para.	Editorial Changed "will be injected" to "is injected" ***No Revision Bar***
10.4-103 through 10.4-104	10.4.10.2.2.3 through 10.4.10.2.2.6	Editorial Deleted detail description such as equipment specification. ***No Revision Bar***
10.4-104	10.4.10.2.2.6 first para.	Editorial Changed "... layup operation is in the SCIS" to "... layup is included in the SCIS". ***No Revision Bar***
10.4-104	10.4.10.2.2.6 second para.	Editorial Changed "will be injected" to "is injected" ***No Revision Bar***
10.4-104	10.4.10.2.2.6 second para.	Editorial Changed "layup pump to four points" to " layup pump at four points " ***No Revision Bar***
10.4-104	10.4.10.2.2.7	Technical Added the description regarding Bulk Chemical System before Piping, Valves and instruments. ***No Revision Bar***
10.4-104	10.4.10.2.2.8	Editorial Change subsection number of "Piping, Valves and instruments" 10.4.10.2.2.7 to 10.4.10.2.2.8. ***No Revision Bar***

Table 1 Change List identified "No Revision Bar" (41/59)

Page	Location (e.g., subsection with paragraph/sentence/ Item, table with column/row, or figure)	Description of Change
10.4-104	10.4.10.2.2.8	Editorial Delete "injection" after "discharge side of the". ***No Revision Bar***
10.4-104	10.4.10.2.2.8	Editorial Delete "injection" after "discharge pressure of the". ***No Revision Bar***
10.4-104	10.4.10.2.2.8	Editorial Changed "described under" to " described in ". ***No Revision Bar***
10.4-104	10.4.10.2.3 first para.	Editorial Deleted ", also called "normal operation"" ***No Revision Bar***
10.4-104	10.4.10.2.3 first para.	Editorial Deleted ", using its "normal operation" equipment" ***No Revision Bar***
10.4-104	10.4.10.2.3 first para.	Editorial Changed "will feed" to "feeds" ***No Revision Bar***
10.4-104	10.4.10.2.3 second para. first sentence	Editorial Changed "will be maintained" to "is maintained" ***No Revision Bar***
10.4-104	10.4.10.2.3 second para. second sentence	Editorial Changed "use i.e., 100%" to "use, i.e., is 100%" ***No Revision Bar***
10.4-104	10.4.10.2.3 second para. third sentence	Editorial Changed "will be treated" to "is treated" ***No Revision Bar***
10.4-105	10.4.10.2.3 second para. fourth sentence	Editorial Changed "will be treated" to "is treated" ***No Revision Bar***
10.4-105	10.4.10.2.3 second para. fifth sentence	Editorial Changed "will be treated" to "is treated" ***No Revision Bar***

Table 1 Change List identified "No Revision Bar" (42/59)

Page	Location (e.g., subsection with paragraph/sentence/ Item, table with column/row, or figure)	Description of Change
10.4-105	10.4.10.2.3 third para.	Editorial Added " Volatile chemicals (pH controller and oxygen scavenger) are mainly depleted in the main condenser and deaerator, and pH controller is removed by CPS and SGBD demineralizer." ***No Revision Bar***
10.4-105	10.4.10.2.3 third para.	Editorial Delete " The cation resins remove ammonium ions from the condensate that flows through the CPS (and the portion of the hydrazine that thermally decomposes to ammonia)." ***No Revision Bar***
10.4-105	10.4.10.2.3 fourth para.	Editorial Changed "will be transferred" to "is transferred" ***No Revision Bar***
10.4-105	10.4.10.2.3 fouth para.	Editorial Change " bulk storage tanks by their transfer pumps to the SCIS chemical addition tanks" to "bulk chemical system to the chemical addition tanks" ***No Revision Bar***
10.4-105	10.4.10.2.3 fourth para.	Editorial Changed "will be prepared" to "is prepared" ***No Revision Bar***
10.4-105	10.4.10.2.3 fouth para.	Editorial Added " Mixing is done by an agitator, which is mounted on the tank top." ***No Revision Bar***
10.4-105	10.4.10.2.3 fifth para. through sixth para.	Editorial Deleted detail description such as equipment specification. ***No Revision Bar***
10.4-105	10.4.10.2.3.1 first para.	Editorial Change " the SCIS includes three " to "the SCIS operates two of three" ***No Revision Bar***

Table 1 Change List identified "No Revision Bar" (43/59)

Page	Location (e.g., subsection with paragraph/sentence/ Item, table with column/row, or figure)	Description of Change
10.4-105	10.4.10.2.3.1 first para.	Editorial Change " One pump is for" to " One pump is used for " ***No Revision Bar***
10.4-105	10.4.10.2.3.1 second para.	Editorial Changed "will be adjusted" to "is adjusted" ***No Revision Bar***
10.4-105	10.4.10.2.3.1 third para. first sentence	Editorial Changed "will display" to " display" ***No Revision Bar***
10.4-105	10.4.10.2.3.1 third para. second sentence	Editorial Changed "will initiate" to " initiates" ***No Revision Bar***
10.4-105	10.4.10.2.3.1 third para. third sentence	Editorial Changed "will be programmed" to "is programmed" ***No Revision Bar***
10.4-105	10.4.10.2.3.1 third para. third sentence	Editorial Changed "will be used" to "are used" ***No Revision Bar***
10.4-105	10.4.10.2.3.2 first para.	Editorial Changed "will be under" to "is under" ***No Revision Bar***
10.4-105	10.4.10.2.3.2 second para.	Editorial Changed "... controllers is in the SCIS" to "... controllers is included in the SCIS". ***No Revision Bar***
10.4-105	10.4.10.2.3.2 third para.	Editorial Changed "will be injected" to "are injected" ***No Revision Bar***
10.4-105	10.4.10.2.3.2 third para.	Editorial Changed "layup pump to four points" to " layup pump at four points " ***No Revision Bar***

Table 1 Change List identified "No Revision Bar" (44/59)

Page	Location (e.g., subsection with paragraph/sentence/ Item, table with column/row, or figure)	Description of Change
10.4-106	10.4.10.2.3.2 fourth para.	Editorial Changed "will be injected" to "is injected" ***No Revision Bar***
10.4-106	10.4.10.2.3.2 fourth para.	Editorial Changed "layup pump to four points" to " layup pump at four points " ***No Revision Bar***
10.4-106	10.4.10.2.3.2 second para.	Editorial Deleted " The pump suction line is connected to the ammonia addition tank." ***No Revision Bar***
10.4-106	10.4.10.3 through 10.4.10.4	Editorial Change "chemical injection system" to "SCIS" ***No Revision Bar***
10.4-107	10.4.10.5 first para.	Editorial Changed "will be manually" to "are manually" ***No Revision Bar***
10.4-107	10.4.10.5 item d	Editorial Change "amount" to "amounts" ***No Revision Bar***
10.4-107	10.4.10.5 item e	Editorial Change "addition metering pumps" to "injection pumps" ***No Revision Bar***
10.4-107	10.4.10.5 item g	Technical Change "Each chemical injection pump" to " Each chemical injection pump and bulk chemical transfer pump" ***No Revision Bar***
10.4-107	10.4.10.5 item h.	Technical Added description regarding Bulk Chemical Storage Tank Level Transmitter ***No Revision Bar***

Table 1 Change List identified "No Revision Bar" (45/59)

Page	Location (e.g., subsection with paragraph/sentence/ Item, table with column/row, or figure)	Description of Change
10.4-107	10.4.10.5 item i.	Technical Added description regarding Bulk chemical Storage Tank Level Switches ***No Revision Bar***
10.4-108 through 10.4-110	Table 10.4.10-1	Editorial Deleted Detail contents. ***No Revision Bar***
10.4-108 through 10.4-109	Table 10.4.10-1	Technical Change ammonia basis to morpholine and DMA basis. ***No Revision Bar***
10.4-108	Table 10.4.10-1	Editorial Added title " pH Controller Addition Tank with Agitator" ***No Revision Bar***
10.4-108	Table 10.4.10-1	Editorial Added title " Oxygen Scavenger Addition Tank with Agitator" ***No Revision Bar***
10.4-109	Table 10.4.10-1	Editorial Added title " pH Controller Injection Pumps for Continuous Operation" ***No Revision Bar***
10.4-109	Table 10.4.10-1	Editorial Added title " Oxygen Scavenger Injection Pumps for Continuous Operation " ***No Revision Bar***
10.4-110	Table 10.4.10-1	Editorial Added title " Oxygen Scavenger Injection Pump for Layup " ***No Revision Bar***
10.4-110	Table 10.4.10-1	Technical Added Bulk Chemical System components. ***No Revision Bar***
10.4-111	Table 10.4.10-2	Technical Change ammonia basis to morpholine and DMA basis. ***No Revision Bar***

Table 1 Change List identified "No Revision Bar" (46/59)

Page	Location (e.g., subsection with paragraph/sentence/ Item, table with column/row, or figure)	Description of Change
10.4-112 through 10.4-113	Figure 10.4.10-1	Technical Change ammonia basis to morpholine and DMA basis. ***No Revision Bar***
General	10.4.11 Auxiliary Steam Supply System	The related portions are changed, with the elimination of the steam converter. Technical: The steam converter is not used for making auxiliary steam because of the reason shown below. • US in general • Construction & running cost advantage A part of main steam or turbine extracting steam is used as auxiliary steam. ***No Revision Bar***
10.4-114	10.4.11 Auxiliary Steam Supply System	Changed "auxiliary boiler, or steam converter" to "auxiliary boiler, main steam or turbine extracting steam". Technical: The steam converter is not used for making auxiliary steam because of the reason shown below. ***No Revision Bar***

Table 1 Change List identified "No Revision Bar" (47/59)

Page	Location (e.g., subsection with paragraph/sentence/ Item, table with column/row, or figure)	Description of Change
10.4-114	10.4.11.1.2 Power Generation Design Basis	This subsection is changed as shown below. "The power generation design bases of the ASSS are as follows: • The ASSS is designed to supply the steam required for plant use during startup, shutdown and normal operation. • The steam converter supplies AS during normal plant operation. • The auxiliary boiler supplies AS during plant startup and shutdown." is changed to "The ASSS has the functions shown below: • During plant normal operation, the ASSS supplies auxiliary steam to the components of primary system or HVAC system by taking the part of the main steam or turbine extracting steam. Then the system transfers the condensed water from these components to the condenser to use the water as the steam again. • During plant startup, shutdown and plant regular inspections, main steam is not available; the auxiliary steam from the auxiliary boiler is supplied to the components of the primary system, HVAC system and secondary system. The condensed water from the primary or HVAC system components are collected to the auxiliary boiler and used as auxiliary steam again, and the auxiliary steam sent to the secondary system is collected to the condenser or Condensate and Feedwater System (CFS). • The auxiliary steam drain monitors the leakage of the radioactive materials from the boric acid evaporator to the condensed water of the ASSS." Technical: The steam converter is not used for making auxiliary steam because of the reason shown below. ***No Revision Bar***
10.4-114	10.4.11.2.1 General Description	This subsection is changed as shown below. "The ASSS is shown schematically in Figure 10.4.11-1. Equipment and components classification and applicable codes and standards are provided in Section 3.2. The ASSS consists of an auxiliary boiler, steam converter and distribution headers. The ASSS is

Table 1 Change List identified "No Revision Bar" (48/59)

Page	Location (e.g., subsection with paragraph/sentence/ Item, table with column/row, or figure)	Description of Change
		distributed throughout the plant to the various components as required. The steam converter consists of one steam converter, one steam converter feedwater tank, two steam converter feedwater pump(s), AS drain tank, two AS drain tank pumps, AS drain monitor heat exchanger, piping, valves and instrumentation. The auxiliary boiler consists of two auxiliary boilers, one auxiliary boiler feedwater tank, three auxiliary boiler feedwater pumps, associated piping valves and instrumentation. AS drain tank, two AS drain tank pumps, and AS drain monitor heat exchanger are common to both loops. The auxiliary steam users are divided into three groups in accordance with the location, the probability of auxiliary steam contamination from users, and the auxiliary steam usage time. Group I consists of a boric acid (B.A.) evaporator, B.A. batching tank, decontamination use, auxiliary building supply air handling unit and general electrical room supply air handling unit. These are located at a lower elevation in the auxiliary building and may contaminate auxiliary steam. Group II components are located at a higher elevation in the auxiliary building and consist of the auxiliary building supply air handling unit, and general electric room supply air handling unit. Group III components are associated with the turbine generator equipment and use auxiliary steam when the main steam is not available. This includes the turbine gland seal and deaerator. The auxiliary boiler and associated equipment are located outside in the yard. The steam converter and associated equipment are located in the turbine building and the common equipment is located in the auxiliary building. Condensed water from group I components drain to the AS drain tank. The AS drain tank pump(s) transfer this condensate to either the steam converter feedwater tank or the auxiliary boiler feedwater tank. Because the condensate from the B.A. evaporator has the potential of being contaminated with radioactive materials via leakages from the other side, a radiation monitor is

Table 1 Change List identified "No Revision Bar" (49/59)

Page	Location (e.g., subsection with paragraph/sentence/ Item, table with column/row, or figure)	Description of Change
		provided in the return line from this equipment. When the concentration of the radioactive materials exceeds the pre set limit, an alarm is activated in the main control room. The AS drain tank pump is stopped and the valve in the B.A. evaporator return line is closed. This prevents the contaminated water from being transferred into the turbine building or outside. Condensed liquid from the Group II components flows directly to either the steam converter feedwater tank or the auxiliary boiler feedwater tank." is changed to "The conceptual flow diagram is shown in Figure 10.4.11-1. The system includes a control valve to reduce the main steam or turbine extracting steam pressure, auxiliary boiler package, auxiliary steam drain tank, auxiliary steam drain pump, auxiliary steam drain monitor, auxiliary steam drain monitor heat exchanger, condensed water piping and other components. The components served by the system are categorized into two groups. Group I components are shown below. For operation as required during startup, shutdown, plant regular inspection and normal operation, the auxiliary steam from the auxiliary boiler, main steam, or extracting steam is supplied to the components continuously or intermittently. Condensed water from these components is collected in the auxiliary steam drain tank and then, by using the auxiliary steam drain pump, is transferred to the condenser during plant normal operation, or to the auxiliary boiler during the period in which the main steam is not available. • Boric acid (B/A) evaporator • B/A batching tank • Non safety-related HVAC equipment Monitoring the leakage from the primary side of the evaporator, the radiation monitor is attached to the downstream of the evaporator. The high alarm of the monitor isolates the condensing line from the evaporator

Table 1 Change List identified "No Revision Bar" (50/59)

Page	Location (e.g., subsection with paragraph/sentence/ Item, table with column/row, or figure)	Description of Change
		to the drain tank and trips the pump. Group II components served by the system are shown below. These components are supplied auxiliary steam from the auxiliary boiler during plant startup, shutdown or regular inspections due to unavailable of the main steam. • Turbine gland seal • Deaerator seal • Deaerator heating The auxiliary steam for group II components is collected in the turbine cycle." Technical: The steam converter is not used for making auxiliary steam because of the reason shown below. ***No Revision Bar***
10.4-115	10.4.11.2.2 Component Description	This subsection is changed as shown below. "<u>Auxiliary Steam Boiler</u> The auxiliary boiler is an oil-fired package boiler. The system is protected from overpressure by safety valves located on the boiler and auxiliary steam header. <u>Auxiliary Boiler Feedwater Pump</u> Three 100-percent capacity auxiliary boiler feedwater pumps are provided to supply feedwater from the auxiliary boiler feedwater tank to the auxiliary boiler. <u>Auxiliary Boiler Feedwater Tank</u> The auxiliary boiler feedwater tank is a 100-percent-capacity tank which collects condensate from the auxiliary steam users. The auxiliary boiler feedwater tank is the source of feedwater for the auxiliary boiler. Makeup water to the tank is supplied from the demineralized water system <u>Steam Converter</u> The steam converter is a packaged unit consisting of steam converter, feedwater tank, two feedwater pumps, drain tank, drain cooler and auxiliaries. The steam converter heats the condensate with the extraction steam from the high-pressure turbine (or main steam) and generates the auxiliary steam. Condensed heating steam drainage is stored in the drain tank. The drainage is cooled in the drain cooler before flowing to the low pressure feedwater heater drain tank (or main

Table 1 Change List identified "No Revision Bar" (51/59)

Page	Location (e.g., subsection with paragraph/sentence/ Item, table with column/row, or figure)	Description of Change
		condenser). Steam Converter Feedwater Pump Two 100-percent capacity steam converter feedwater pumps are provided to supply feedwater from the steam converter feedwater tank to the steam converter. Steam Converter Feedwater Tank The steam converter feedwater tank is a 100-percent-capacity tank which collects condensate from the auxiliary steam users. The steam converter feedwater tank is the source of feedwater for the steam converter. Makeup water to the tank is supplied from the demineralized water system. Auxiliary Steam Drain Tank One 100-percent capacity auxiliary steam drain tank is provided to collect condensate from group I auxiliary steam users. Auxiliary Steam Drain Tank Pump Two 100-percent capacity auxiliary steam drain tank pumps are provided to transfer the condensate from the auxiliary steam drain tank to the steam converter feedwater tank or the auxiliary boiler feedwater tank. Auxiliary Steam Drain Monitor Heat Exchanger The auxiliary steam drain monitor cooler cools the condensate to below approximately 105°F before flowing to the radiation monitor. The cooler is a double pipe heat exchanger where the condensed water flows inside a cooling coil and is cooled by component cooling water flowing outside cooling coil." is changed to "Auxiliary steam drain tank The auxiliary steam drain tank collects the condensed water from group I components Auxiliary steam drain tank pump The auxiliary steam drain pump transfers the condensed water from the group I components to the condenser during plant normal operation or to the auxiliary boiler in situations in which main steam is not available.

Table 1 Change List identified "No Revision Bar" (52/59)

Page	Location (e.g., subsection with paragraph/sentence/ Item, table with column/row, or figure)	Description of Change
		The pumps are actuated by the high water level signal of the tank, and then stopped by the low signal. The pumps are also tripped by the auxiliary steam drain monitor high alarm. Two pumps are used by the system, another one is a spare. Auxiliary steam drain monitor heat exchanger The auxiliary steam drain monitor heat exchanger keeps the temperature of condensed water from the evaporator below the allowable monitor temperature. Auxiliary boiler package The auxiliary boiler package supplies the auxiliary steam to the group I or II components when main steam is not available. One auxiliary boiler package is installed to per unit." Technical: The steam converter is not used for making auxiliary steam because of the reason shown below. ***No Revision Bar***
10.4-116	10.4.11.2.3 System Operation	This subsection is changed as shown below. "Startup and Shutdown The auxiliary boiler supplies auxiliary steam to the Group I, II and III components. Normal Operation The steam generated by the steam converter is supplied to the Group I and II components. The main steam system supplies steam to the Group III components. The condensed water from the Group I components is collected into the auxiliary steam drain tank and pumped by the auxiliary drain tank pump to the steam converter feedwater tank. The condensed water from the Group II components is returned directly to the steam converter feedwater tank. Operational safety features are provided within the system for the protection of plant personnel and equipment." is changed to "During startup, shutdown and plant reglar maintenance

Table 1 Change List identified "No Revision Bar" (53/59)

Page	Location (e.g., subsection with paragraph/sentence/ Item, table with column/row, or figure)	Description of Change
		The steam generated by the auxiliary boiler is supplied to the group I, II components when main steam is not available. Demineralized water, as feedwater to the auxiliary boiler, is provided from the Condensate Storage Facility to the auxiliary boiler. Condensed water from the group I components is collected in the auxiliary steam drain tank, and the water is transfered to the auxiliary boiler by the auxiliary drain pump. <u>During normal operation</u> Auxiliary steam from main steam or turbine extracting steam is supplied to the group I and II components. The group II steam is collected to the turbine cycle. <u>Leakage of radioactive materials from primary side in the B/A evaporator</u> If there is leakage of radioactive materials from the primary side in the B/A evaporator, the auxiliary steam drain tank inlet isolation valve is closed and the auxiliary steam drain pumps are tripped by the auxiliary steam drain monitor high alarm. The high signal is alarmed to the main control room." Technical: The steam converter is not used for making auxiliary steam because of the reason shown below. ***No Revision Bar***
10.4-116	10.4.11.4 Tests and Inspections	Deleted "Testing of the ASSS is performed prior to initial plant operation in accordance with Chapter 14 requirements". Editorial: No requirements in Chapter 14. ***No Revision Bar***

Table 1 Change List identified "No Revision Bar" (54/59)

Page	Location (e.g., subsection with paragraph/sentence/ Item, table with column/row, or figure)	Description of Change
10.4-117	10.4.11.5 Instrumentation Applications	2nd and 3rd paragraph is changed to as shown below. "A temperature gauge is installed in the outlet line to the auxiliary steam drain radiation monitor. If the temperature reaches 130°F, the inlet stop valve to the auxiliary drain monitor cooler is closed to protect the radiation monitor. The high temperature activates an alarm in the control room. The radiation monitor detects the potential leakage of radioactive materials from the B.A. evaporator. When the concentration of radioactive materials exceeds the set point the auxiliary steam drain tank inlet isolation valve in the condensate line is closed, the auxiliary steam drain tank pump is stopped. A high radiation level activates an alarm in the main control room." is changed to "The ASSS is provided with the necessary controls and indications for local or remote monitoring of system operation. A temperature gauge is installed at the inlet of the auxiliary steam drain monitor. When the condensed water temperature through the monitor reaches the monitor line high temperature set point, the auxiliary steam drain monitor inlet stop valve is closed and the monitor is protected. High temperature is alarmed in the main control room. The radiation monitor is provided to monitor the leakage of radioactive materials in the condensed water from the B/A evaporator. When the concentration of radioactive material exceeds the set point, the auxiliary steam drain tank inlet isolation valve is closed and auxiliary steam drain tank pump is stopped. High radiation is alarmed in the main control room." Technical: High alarm set point of the auxiliary steam drain monitor inlet is decided in detail design phase. ***No Revision Bar***

Table 1 Change List identified "No Revision Bar" (55/59)

Page	Location (e.g., subsection with paragraph/sentence/ Item, table with column/row, or figure)	Description of Change
10.4-118	Figure 10.4-11 Auxiliary Steam Supply System Piping and Instrumentation Diagram	Corrected this figure . Technical: Minor changes are added. ***No Revision Bar***
10.4-119	10.4.12 Combined License Information	Delete the statement as for Steam Generator drain from COL 10.4(2) and describe it at COL 10.4(5). Add new COL item COL 10.4(5). Editorial: Clarify statement. ***No Revision Bar***
10.4-119	10.4.12 Combined License Information	The COL item 10.4(3) "Secondary Side Chemical Injection System The Combined License applicant is to address the bulk chemical storage tanks and associated transfer pumps selection for the secondary side chemical injection system." is deleted. Technical: This item is applied to typical design. ***No Revision Bar***
10.4-119	10.4.12 Combined License Information	The COL item 10.4(4) "Auxiliary Steam System The design of the AS is site specific and is to be addressed by the Combined License Applicant." is deleted. Technical: This item is applied to typical design. ***No Revision Bar***

Table 1 Change List identified "No Revision Bar" (56/59)

Page	Location (e.g., subsection with paragraph/sentence/ Item, table with column/row, or figure)	Description of Change
11.2-5	Section 11.2.1.5	Editorial: Delete statement including reference which is no longer applicable and add new reference Nuclear Energy Institute(NEI) topical report 07-11 is replaced with RG1.110. ***No Revision Bar***
11.3-12	Section 11.3.3.1	Editorial: clarified statement Insert the following text after the last paragraph. "The COL applicant is to calculate doses to members of the public following the guidance of RG 1.109(Ref. 11.3-19) and RG 1.111(Ref. 11.3-22), and compare the doses due to the gaseous effluents with the numerical design objectives of 10 CFR 50, Appendix I (Ref. 11.3-3) and compliance requirements of 10 CFR 20.1302(Ref. 11.3-24), 40 CFR 190(Ref. 11.3-25)." ***No Revision Bar***
11.3-16	Section 11.3.7 COL 11.3(6)	Editorial: Clarify scope of statement Insert "with" after "compliance" ***No Revision Bar***

Table 1 Change List identified "No Revision Bar" (57/59)

Page	Location (e.g., subsection with paragraph/sentence/ Item, table with column/row, or figure)	Description of Change
12.4-1 thru 12.4-5	Section 12.4	Moved to section 12.4 from12.3.5 Consequently, all the subsections, tables, figures and references in subsection 12.3.5 are changed to "12.4._" or "12.4-_" Editorial: Conformed section/subsection number to the arrangement of chapters of RG-1.206, C.I.12. ***No Revision Bar***

Table 1 Change List identified "No Revision Bar" (58/59)

Page	Location (e.g., subsection with paragraph/sentence/ Item, table with column/row, or figure)	Description of Change
Technical Specifications		
General	-	Technical: Incorporation of customer's preference Risk-Informed Technical Specification Initiative 5b were incorporated based on TSTF-425 which involved changes to the following LCOs and associated Bases. LCO 3.1.1 LCO 3.1.2 LCO 3.1.4 LCO 3.1.5 LCO 3.1.6 LCO 3.1.9 LCO 3.2.1 LCO 3.2.2 LCO 3.2.3 LCO 3.2.4 LCO 3.3.1 LCO 3.3.2 LCO 3.3.3 LCO 3.3.4 LCO 3.3.5 LCO 3.3.6 LCO 3.4.1 LCO 3.4.2 LCO 3.4.3 LCO 3.4.4 LCO 3.4.5 LCO 3.4.9 LCO 3.4.11 LCO 3.4.12 LCO 3.4.13 LCO 3.4.14 LCO 3.4.15 LCO 3.4.16 LCO 3.5.1 LCO 3.5.2 LCO 3.5.4 LCO 3.5.5 LCO 3.6.2 LCO 3.6.3 LCO 3.6.4 LCO 3.6.5 LCO 3.6.6 LCO 3.7.2 LCO 3.7.3 LCO 3.7.4 LCO 3.7.5 LCO 3.7.6 LCO 3.7.7 LCO 3.7.8 LCO 3.7.10 LCO 3.7.11 LCO 3.7.12 LCO 3.7.13 LCO 3.7.14 LCO 3.8.1 LCO 3.8.3 LCO 3.8.4 LCO 3.8.6 LCO 3.8.7 LCO 3.8.9 ***(No Revision Bar for SR 3.7.5.3 related to LCO 3.7.5)***

Table 1 Change List identified "No Revision Bar" (59/59)

Page	Location (e.g., subsection with paragraph/sentence/ item ,table with column/row, or figure)	Description of Change
19.1-326	Table 19.1-56	Revise the tables of the internal fire results. Technical: Reflect the modification of plant layout and cable routing design to Fire PRA. ***No Revision Bar***

Table 2. Change List identified "Unintentionally Deleted" (1/2)

Page	Location (e.g., subsection with paragraph/sentence/ Item, table with column/row, or figure)	Description of Change
9.1-7	9.1.2.2.2 Spent Fuel Storage First paragraph, third sentence	Replaced " (Section 3.7)" with "(Section 3.7.2)". However, this change is not necessary. ***Unintentionally Changed***
9.1-7	9.1.2.2.2 Spent Fuel Storage Between first paragraph and second paragraph	Following paragraph was deleted, while it is still needed for DCD rev.1: "The spent fuel storage pit is approximately 47 feet deep of reinforced concrete lined with stainless steel plate. The spent fuel storage pit normal water level is approximately 1 ft - 2 in. below the operating floor with approximately 400,000 gallons of borated water. This water level allows a spent fuel assembly to be transferred with at least 133 inches of water shielding above the top of the fuel assembly for personnel protection." ***Unintentionally Deleted***
9.2-4	9.2.1.2.3 System Operation	Editorial: Typo Replaced " System Operation" with " Deleted System Operation". However, this change is not necessary. ***Unintentionally Changed***
9.5-20	9.5.2.2.1 forth paragraph	Following subsection number was deleted, while it is still needed for DCD rev.1: Delate the "9.5.2.2.1.1". ***Unintentionally Deleted***
9.5-20	9.5.2.2.1.1 Audio Messenger Interface	Following subsection number was changed, while it don't need to change for DCD rev.1: Change "9.5.2.2.1.2" to "9.5.2.2.1.1". ***Unintentionally Changed***

Table 2 Change List identified "Unintentionally Deleted" (2/2)

Page	Location (e.g., subsection with paragraph/sentence/ Item, table with column/row, or figure)	Description of Change
12-v	Title of Table 12.2-31	Added "*" at the end of title. However, this change is not necessary. ***Unintentionally Deleted***
12-vi	Title of Table 12.2-44	Added "*" at the end of title. However, this change is not necessary. . ***Unintentionally Deleted***