NRC JPM RO COO1
Constellation Energy Group
NINE MILE POINT UNIT 1
OPERATOR JOB PERFORMANCE MEASURE

Title: Perform Control Room System Lineup Verification Revision: NRC 2008

Task Number: N/A

Approvals:

8/14/2008

General Supervisor Date
Operations Training (Designee)

N/A – Exam Security
General Supervisor Date
Operations (Designee)

N/A – Exam Security
Configuration Control Date

Performer:_____(RO)

Trainer/Evaluator:_____

Evaluation Method: Perform

Evaluation Location: Simulator

Expected Completion Time: 15 minutes Time Critical Task: No Alternate Path Task: No

Start Time: _____ Stop Time:_____ Completion Time:_____

JPM Overall Rating: Pass Fail

NOTE: A JPM overall rating of fail shall be given if any critical step is graded as fail. Any grade of unsat or individual competency area unsat requires a comment.

Comments:

Evaluator Signature:_____ Date:_____

Recommended Start Location: Simulator

Simulator Set-up: IC-187 (100% power IC with the following overrides)

- Place 60-18B EC Makeup LCV 12 in MAN
- Verify open Containment Spray Suction Valve 122. Hang red clearance on switch indicating that the valve should be closed.
- Place Containment Spray Pump 122 control switch in PTL with a red clearance tag applied.
- Activate remote CS06 for Core Spray 40-31 BRK STATUS RACK IN (K Panel red light is ON)

Directions to the Instructor/Evaluator:

Prior to performance of this JPM, obtain SM / CSO general permission to open equipment cabinets and inspection covers. If opening the equipment cabinet or inspection cover will affect Tech. Spec. Operability, operational status, or the effects are unknown, obtain specific SM / CSO permission.

Directions to Operators:

Read Before Every JPM Performance:

For the performance of this JPM, I will function as the SM, CSO, and Auxiliary Operators. Prior to providing direction to perform this task, I will provide you with the initial conditions and answer any questions. During task performance, I will identify the steps to be simulated, or discuss and provide cues as necessary.

With the exception of accessing panels, NO plant equipment will be physically manipulated. Repositioning of devices will be simulated by discussion and acknowledged by my cues.

Read Before Each Evaluated JPM Performance:

This evaluated JPM is a measure of your ability to perform this task independently. The Control Room Supervisor has determined that a verifier is not available and that additional / concurrent verification will not be provided; therefore, it should not be requested.

Read Before Each Training JPM Performance:

During this Training JPM, the use of applicable methods of verification and checking are expected. Therefore, either another individual or I will act as the independent verifier or peer checker.

Notes to Instructor / Evaluator:

1. Critical steps are identified in grading areas **Pass/Fail**.
2. During Evaluated JPM:
   - Self checking shall be demonstrated.
3. During Training JPM:
   - Self checking shall be demonstrated.
   - Peer checking shall be demonstrated.

References:

1. N1-PM-D002 Attachment 1
2. K/A 2.1.31 (4.2) Ability to locate control room switches/controls and indications and to determine that they are correctly reflecting the desired plant lineup.

Tools and Equipment:
1. None.

Task Standard: Perform the panel K checks of N1-PM-D002, Control Switch Lineup Verification, attachment 1, and identify incorrect lineups.

Initial Conditions:
1. The plant is operating at 100% power.
2. You are the oncoming day shift RO.
3. N1-PM-D002, Control Switch Lineup Verification, attachment 1 is in progress.
4. Ask the operator for any questions.

Initiating cue:

"(Operator's name), complete the panel K checks of N1-PM-D002, Control Switch Lineup Verification, attachment 1."

Performance Steps	*Standard*	*Grade*
1. Provide repeat back of initiating cue. *Evaluator Acknowledge repeat back providing correction if necessary*	Proper communications used for repeat back (GAP-OPS-O1)	Sat/Unsat
RECORD START TIME _____		
2. Obtain a copy of the reference procedure and review/utilize the correct section.	N1-PM-D002 obtained and Attachment 1 reviewed	Sat/Unsat
3. Proceed to K Panel to continue lineup.	Proceeds to K Panel to perform panel lineup checks	Sat/Unsat
4. Record Attachment 1 lineup verifications, starting with section 1.2 and evaluates plant status.	• Performs checks for Liquid Poison system	Sat/Unsat
	• Performs checks for Emergency Cooling system	Sat/ Unsat
	• Identifies LC-60-18B EM CONDSR MAKEUP LCV 12 in manual	**Pass/Fail**

Performance Steps	*Standard*	*Grade*
	• Performs checks for Containment Spray system	Sat/Unsat
	• Identifies CONT SPRAY SUCTION ISOLATION VALVE 122 is open with a red clearance tag applied requiring the valve to be closed	**Pass/Fail**
	• Performs checks for Core Spray system	Sat/Unsat
	• Identifies 40-31 CORE SPRAY VENT ISOLATION VALVE 121 position lights are ON, indicating its circuit breaker is in the wrong position.	**Pass/Fail**
5. For abnormal switch and/or indications detected which are not expected, the Control Room Supervisor shall be immediately informed. No attempt shall be made to correct the condition prior to obtaining permission from the Control Room Supervisor, and the expected response of such actions is completely understood.	• Immediately reports out of position switches and components to CRS.	Sat/Unsat
	• Does not attempt to correct these conditions prior to obtaining permission from the CRS.	**Pass/Fail**
6. Reports completion of section 1.2 to SRO.	• Reports completion of section 2.2	Sat/Unsat

Terminating Cue: The panel K checks of N1-PM-D002, Control Switch Lineup Verification, attachment 1, are complete and all discrepancies have been reported to CRS.

RECORD STOP TIME: _____

Initial Conditions:

1. The plant is operating at 100% power.
2. You are the oncoming day shift RO.
3. N1-PM-D002, Control Switch Lineup Verification, attachment 1 is in progress.

Initiating cue:

"(Operator's name), complete the panel K checks of N1-PM-D002, Control Switch Lineup Verification, attachment 1."

NINE MILE POINT NUCLEAR STATION

PREVENTIVE MAINTENANCE PROCEDURE

N1-PM-D002

REVISION 00

CONTROL SWITCH LINEUP VERIFICATION

Approved by: N. F. Conicella — Manager Operations — 4-25-07 Date

SATELLITE MASTER COPY TRAINING ONLY

THIS PROCEDURE PARTIALLY SUPERSEDES PROCEDURE S-PM-D001

Effective Date: 4/27/2007

CONTROLLED WORKING COPY
VERIFIED BY
NOT TO BE USED AFTER Tomorrow 1800
DATE/TIME

LIST OF EFFECTIVE PAGES

Page No.	Change No.	Page No.	Change No.	Page No.	Change No.
Coversheet .		18			
i		19			
ii		20			
iii					
1					
2					
3					
4					
5					
6					
7					
8					
9					
10					
11					
12					
13					
14					
15					
16					
17					

LIST OF EFFECTIVE PAGES

TABLE OF CONTENTS

SECTION		PAGE
1.0	PURPOSE	1
2.0	REFERENCES AND COMMITMENTS	1
3.0	GENERAL TEST METHODS	2
4.0	PRECAUTIONS AND LIMITATIONS	3
5.0	PREREQUISITES	3
6.0	PROCEDURE	4
7.0	RETURN TO NORMAL	4
8.0	ACCEPTANCE CRITERIA	5
9.0	RECORD REVIEW AND DISPOSITION	5
ATTACHMENT 1: CONTROL ROOM SYSTEM LINEUP VERIFICATION CHECKLIST		6
ATTACHMENT 2: RADWASTE CONTROL ROOM SYSTEM LINEUP VERIFICATION CHECKLIST		15
ATTACHMENT 3: TEST PERSONNEL SIGNATURE AND INITIAL LOG		20

1.0 PURPOSE

To provide instructions to verify proper system configuration from indications available in the Control Room and Radwaste Control Room to support system operability and plant operation.

1.1 Frequency

This procedure shall be performed once each shift unless waived by the SM.

2.0 REFERENCES AND COMMITMENTS

2.1 Technical Specifications

None

2.2 Policies, Programs, and Procedures

2.2.1 GAP-OPS-01, Administration of Operations

2.2.2 GAP-OPS-02, Control of Hazardous Energy and Configuration Tagging

2.2.3 Operations Manual

2.3 Technical Information

2.3.1 DER 1-98-0851, Valve 80-118 Found Open

2.3.2 DER 2003-4156, Self Assessment Report

2.3.3 LER 98-04, Containment Isolation Valve Left Open in Violation of Technical Specifications Due to Personnel Error.

2.3.4 SE 98-021 Draft B rev 0, Appendix R high/low pressure and inventory loss flow path isolation for the Core Spray System injection high point vent lines.

2.4 Commitments

Sequence Number	Commitment Number	Description

None

3.0 GENERAL TEST METHODS

3.1 System Operability

3.1.1 Attachment 1, Control Room System Lineup Verification is used to verify that certain key control room switches and indications conform to normal operating lineup requirements to support system operability and overall plant operation.

3.1.2 Satisfactory completion of this procedure does not in itself verify complete system operability, since only certain key control room indications are checked. The respective Operating Procedure shall be utilized to determine full system lineup requirements and overall operability.

3.2 Completion of Attachments 1 & 2

3.2.1 Attachments 1 & 2 are divided into critical parameters and panels. Each panel covers switches and indications for a control room panel.

3.2.2 During periods of peak control room activities such as plant startups and shutdowns, personnel are normally assigned to higher priority tasks. Performance of this procedure may be waived by the SM under these circumstances and procedure performance resumed as soon as the plant activity level permits.

3.2.3 Switch positions and/or indications that differ from the Normal Position identified in Attachments 1 & 2 due to Clearances, Control Tags, or other evolutions in progress should be noted in Remarks.

3.2.4 Normal Positions identified in Attachments 1 & 2 reflect normal, full power plant operation. When performing this procedure during plant shutdown conditions, or less than full power operating conditions, it is expected that certain discrepancies will exist. Discrepancies identified for such conditions should be noted in Remarks.

3.2.5 For abnormal switch and/or indications detected which are not expected, the Control Room Supervisor shall be immediately informed. No attempt shall be made to correct the condition prior to obtaining permission from the Control Room Supervisor, and the expected response of such actions is completely understood.

3.26 Unless otherwise specified in Attachments 1 & 2, the normal position of all switches designed to spring return to Neutral, Auto, Auto-Start, etc., shall be the spring return position. Green/Red flag conditions will also correspond to switch position, unless otherwise stated.

4.0 PRECAUTIONS AND LIMITATIONS

4.1 Failure to notify the Control Room Supervisor (CRS) immediately whenever a procedural step cannot be completed as stated, or if any unexpected system lineup discrepancies are detected during the test, may result in a Technical Specification violation.

4.2 An unexpected plant/system response may occur if an attempt is made to re-position or otherwise correct an out of normal system/component condition. Obtain permission from the Control Room Supervisor prior to re-positioning any equipment.

5.0 PREREQUISITES — Initials

5.1 Specify the reason for test performance.

(✓) Routine Performance

(_) Other (specify) _____ TRH

5.2 Verify that personnel responsible for the performance of this procedure have reviewed the procedure in its entirety, and thoroughly understand it's content. TRH

5.3 Notify SM that procedure is to be performed.

PLANT IMPACT: **NONE** TRH

5.4 Notify CSO that procedure is to be performed. TRH

6.0 PROCEDURE

6.1 Observe panel switches and/or indications listed in Attachments 1 & 2, and determine whether they conform to the Normal Position specified. Check "Yes" or "No" column as applicable.

6.2 If switch positions and/or indications differ from the Normal Position identified in Attachments 1 & 2 due to expected conditions such as Clearances, Control Tags, or other evolutions in progress, include a note in the Remarks Section

6.3 If unexpected discrepancies are identified between actual switch positions and/or indications, and the Normal Position identified in Attachments 1 & 2, immediately notify the Control Room Supervisor (CRS) of the condition. Do NOT attempt to correct the condition prior to obtaining CRS permission.

6.4 Upon identification of any abnormal switch position or indication;

a. the CRS shall coordinate corrective action to restore the system to normal, including a pre-assessment of expected response prior to manipulating any equipment.

b. initiate a CR to document the occurrence, and to determine operability and reportability.

7.0 RETURN TO NORMAL

	Initials
Verify all personnel performing this procedure have signed and initialed Attachment 3, TEST PERSONNEL SIGNATURE AND INITIAL LOG.	_____

8.0 ACCEPTANCE CRITERIA

8.1 All test documentation completed.

0630-1830		1830-0630	
(__) SAT	(__) UNSAT	(__) SAT	(__) UNSAT

Remarks: _____

_____

_____

_____

_____

_____	/	_____	/
Completed by CRS/SM	Date	Completed by CRS/SM	Date

8.2 Second Review

All test data reviewed AND documentation completed.

_____	/	/
STA/SRO Signature	Date	Time

9.0 RECORD REVIEW AND DISPOSITION

9.1 The following records generated by this procedure shall be maintained by Records Management for the Permanent Plant File in accordance with Procedure NIP-RMG-01, Records Management:

- None

9.2 The following records generated by this procedure are not required for retention in the Permanent Plant File:

- The completed procedure

9.3 The permanent record for the completion of this procedure will be a log entry for both Attachments 1 & 2. Retention of the completed procedure is not required.

CONTROL ROOM SYSTEM LINEUP VERIFICATION CHECKLIST

SYSTEM/COMPONENT DESCRIPTION	NORMAL POSITION/CONDITION	0630-1830 IN NORMAL CONDITION (✓) COLUMN YES/NO	1830-0630 IN NORMAL CONDITION (✓) COLUMN YES/NO
1.1 PANEL - L			
CAD CHANNEL 11 RPS BY-PASS	NORMAL	✓ /	/
CAD CHANNEL 12 RPS BY-PASS	NORMAL	✓ /	/
CONTAINMENT MONITOR SYS 11 SAMPLE STREAM DW / TORUS	WHITE AND BLUE LIGHTS CYCLE ON/OFF	✓ /	/
CONTAINMENT MONITOR SYS 12 SAMPLE STREAM DW / TORUS	WHITE AND BLUE LIGHTS CYCLE ON/OFF	✓ /	/
201.7-01 & 201.7-02 CONTAINMENT MONITOR SYS 11 DRYWELL SAMPLE ISOL VLVS	OPEN	✓ /	/
201.2-110 & 201.2-111 CONTAINMENT MONITOR SYS 11 TORUS SAMPLE ISOL VLVS	OPEN	✓ /	/
201.2-109 & 201.2-112 CONTAINMENT MONITOR SYS 11 TORUS RETURN ISOL VLVS	OPEN	✓ /	/
201.2-23 & 201.2-24 CONTAINMENT MONITOR SYS 12 TORUS SAMPLE ISOL VLVS	OPEN	✓ /	/
201.2-29 & 201.2-30 CONTAINMENT MONITOR SYS 12 DRYWELL SAMPLE ISOL VLVS	OPEN	✓ /	/
CONTAINMENT MONITOR SYS 11 OXYGEN ANALYZER RANGE	0 - 5%	✓ /	/
CONTAINMENT MONITOR SYS 12 OXYGEN ANALYZER RANGE	0 - 5%	✓ /	/
CONTAINMENT MONITOR SYS 11 HYDROGEN ANALYZER RANGE	0 - 5%	✓ /	/
CONTAINMENT MONITOR SYS 12 HYDROGEN ANALYZER RANGE	0 - 5%	✓ /	/
POST LOCA VENT			
201.1-09 & 201.1-11 POST LOCA VENT VLVS	CLOSED	✓ /	/
201.1-14 & 201.1-16 POST LOCA VENT VLVS	CLOSED	✓ /	/

Remarks: _____

CONTROL ROOM SYSTEM LINEUP VERIFICATION CHECKLIST

SYSTEM/COMPONENT DESCRIPTION	NORMAL POSITION/CONDITION	0630-1830 IN NORMAL CONDITION (✓) COLUMN YES/NO	1830-0630 YES/NO
REACTOR BUILDING EMERGENCY VENTILATION			
EM VENT EXHAUST FAN 11 OUTLET BV	CLOSED	✓/	/
EM VENT EXHAUST FAN 11 INLET FCV	OPEN	✓/	/
202-53 EVS FAN 11	AUTO, AFTER STOP	✓/	/
EM VENTILATION LOOP 11 COOLING BV, and 202-37 EM VENTILATION LOOP 11 INLET BV	AUTO / BOTH VALVES CLOSED	✓/	/
201-18 EM VENTILATION FROM DW & TORUS BV	CLOSED	✓/	/
FC-202-49C	AUTO/ 100% OPEN	✓/	/
FC-202-92C	AUTO/ 100% OPEN	✓/	/
202-47 EM VENTILATION TIE BV	CLOSED	✓/	/
201-11 TORUS/DRYWELL VENT TO CONDENSER	KEYLOCKED NEUTRAL/CLOSED	✓/	/
EM VENT EXHAUST FAN 12 OUTLET BV	CLOSED	✓/	/
EM VENT EXHAUST FAN 12 INLET FCV	OPEN	✓/	/
202-33 EVS FAN 12	AUTO, AFTER STOP	✓/	/
EM VENTILATION LOOP 12 COOLING BV, and 202-38 EM VENTILATION LOOP 12 INLET BV	AUTO / BOTH VALVES CLOSED	✓/	/
202-36 EM VENTILATION FROM REACTOR BLDG BV	KEYLOCKED OPEN	✓/	/
1.2 PANEL - K			
LIQUID POISON			
LIQUID POISON EXPL VALVE 11 CONTINUITY	WHITE LIGHT ON	/	/
LIQUID POISON EXPL VALVE 12 CONTINUITY	WHITE LIGHT ON	/	/

Remarks: _____

CONTROL ROOM SYSTEM LINEUP VERIFICATION CHECKLIST

SYSTEM/COMPONENT DESCRIPTION	NORMAL POSITION/CONDITION	0630-1830 IN NORMAL CONDITION (✓) COLUMN YES/NO	1830-0630 YES/NO
EMERGENCY COOLING			
39-09R EC STM ISOLATION VALVE 111	OPEN	____/____	____/____
39-07R EC STM ISOLATION VALVE 112	OPEN	____/____	____/____
39-05 EMERG CNDSR COND RET ISOLATION VALVE 11	CLOSED	____/____	____/____
39-10R EC STM ISOLATION VALVE 121	OPEN	____/____	____/____
39-08R EC STM ISOLATION VALVE 122	OPEN	____/____	____/____
39-06 EMERG CNDSR COND RET ISOLATION VALVE 12	CLOSED	____/____	____/____
05-11 EMERG COND VENT ISOLATION VALVE 112	OPEN	____/____	____/____
05-01R EMERG COND VENT ISOLATION VALVE 111	OPEN	____/____	____/____
05-02R EM COND VENT TO MN STM ISOLATION VALVE 11	OPEN	____/____	____/____
05-03R EM COND VENT TO MN STM ISOLATION VALVE 12	OPEN	____/____	____/____
05-04R EMERG COND VENT ISOLATION VALVE 121	OPEN	____/____	____/____
05-12 EMERG COND VENT ISOLATION VALVE 122	OPEN	____/____	____/____
05-05 EC VENT TO TORUS BV 11	CLOSED	____/____	____/____
05-07 EC VENT TO TORUS BV 12	CLOSED	____/____	____/____
LC-60-17B EM CONDSR MAKEUP LCV 11	AUTO/ CLOSED	____/____	____/____
60-04 EMERGENCY CONDENSER MU TANK FILL V 11	CLOSED	____/____	____/____
60-13 EMERGENCY CONDENSER MAKEUP TIE VALVE 1	OPEN	____/____	____/____
LC-60-18B EM CONDSR MAKEUP LCV 12	AUTO/ CLOSED	____/____	____/____
60-03 EMERGENCY CONDENSER MU TANK FILL V 12	CLOSED	____/____	____/____
39-11R EMERG CNDSR STM SUPPLY DRAIN IV 111	OPEN	____/____	____/____
39-12R EMERG CNDSR STM SUPPLY DRAIN IV 112	OPEN	____/____	____/____
39-13R EMERG CNDSR STM SUPPLY DRAIN IV 121	OPEN	____/____	____/____
39-14R EMERG CNDSR STM SUPPLY DRAIN IV 122	OPEN	____/____	____/____

Remarks: _____

CONTROL ROOM SYSTEM LINEUP VERIFICATION CHECKLIST

SYSTEM/COMPONENT DESCRIPTION	NORMAL POSITION/CONDITION	0630-1830 IN NORMALCONDITION (✓) COLUMN YES/NO	1830-0630 YES/NO
CONTAINMENT SPRAY			
80-16 CONT SPRAY DISCH IV 111	KEYLOCKED, OPEN	____/____	____/____
80-36 CONT SPRAY DISCH IV 112	KEYLOCKED, OPEN	____/____	____/____
80-15 CONT SPRAY DISCH IV 121	KEYLOCKED, OPEN	____/____	____/____
80-35 CONT SPRAY DISCH IV 122	KEYLOCKED, OPEN	____/____	____/____
80-118 CONT SPRAY TEST TO TORUS FCV	CLOSED	____/____	____/____
80-40 CONT SPRAY BYPASS BV 111	OPEN	____/____	____/____
80-44 CONT SPRAY BYPASS BV 112	CLOSED	____/____	____/____
80-41 CONT SPRAY BYPASS BV 121	CLOSED	____/____	____/____
80-45 CONT SPRAY BYPASS BV 122	OPEN	____/____	____/____
93-71, 93-25 CONT SPRAY RAW WTR 111 INTERTIE	93-71 CLOSED, 93-25 OPEN	____/____	____/____
93-72, 93-28 CONT SPRAY RAW WTR 112 INTERTIE	93-72 CLOSED, 93-28 OPEN	____/____	____/____
93-73, 93-26 CONT SPRAY RAW WTR 121 INTERTIE	93-73 CLOSED, 93-26 OPEN	____/____	____/____
93-74, 93-27 CONT SPRAY RAW WTR 122 INTERTIE	93-74 CLOSED, 93-27 OPEN	____/____	____/____
CONT SPRAY SUCTION ISOLATION VALVE 111	OPEN	____/____	____/____
CONT SPRAY SUCTION ISOLATION VALVE 112	OPEN	____/____	____/____
CONT SPRAY SUCTION ISOLATION VALVE 121	OPEN	____/____	____/____
CONT SPRAY SUCTION ISOLATION VALVE 122	OPEN	____/____	____/____
80-114 CONT SPRAY TO RAD WASTE IV 11	CLOSED	____/____	____/____
80-115 CONT SPRAY TO RAD WASTE IV 12	CLOSED	____/____	____/____
TORUS MAKEUP VALVE 1	CLOSED	____/____	____/____

Remarks: _____

CONTROL ROOM SYSTEM LINEUP VERIFICATION CHECKLIST

SYSTEM/COMPONENT DESCRIPTION	NORMAL POSITION/CONDITION	0630-1830 IN NORMALCONDITION (✓) COLUMN YES/NO	1830-0630 YES/NO
CORE SPRAY			
40-30 CORE SPRAY VENT ISOLATION VALVE 111	LIGHTS OUT	____/____	____/____
40-31 CORE SPRAY VENT ISOLATION VALVE 121	LIGHTS OUT	____/____	____/____
40-32 CORE SPRAY VENT ISOLATION VALVE 112	CLOSED	____/____	____/____
40-33 CORE SPRAY VENT ISOLATION VALVE 122	CLOSED	____/____	____/____
40-11 CORE SPRAY DISCHARGE IV 111 (INSIDE)	CLOSED	____/____	____/____
40-10 CORE SPRAY DISCHARGE IV 112 (INSIDE)	CLOSED	____/____	____/____
40-01 CORE SPRAY DISCHARGE IV 121 (INSIDE)	CLOSED	____/____	____/____
40-09 CORE SPRAY DISCHARGE IV 122 (INSIDE)	CLOSED	____/____	____/____
40-12 CORE SPRAY DISCHARGE IV 11 (OUTSIDE)	OPEN	____/____	____/____
40-02 CORE SPRAY DISCHARGE IV 12 (OUTSIDE)	OPEN	____/____	____/____
40-06 CORE SPRAY TEST VALVE 11	CLOSED	____/____	____/____
40-05 CORE SPRAY TEST VALVE 12	CLOSED	____/____	____/____
CORE SPRAY SUCTION ISOLATION VALVE 111	OPEN	____/____	____/____
CORE SPRAY SUCTION ISOLATION VALVE 112	OPEN	____/____	____/____
CORE SPRAY SUCTION ISOLATION VALVE 121	OPEN	____/____	____/____
CORE SPRAY SUCTION ISOLATION VALVE 122	OPEN	____/____	____/____
1.3 PANEL - H			
CONDENSATE & FEEDWATER			
30-31 FW RECIRC TO COND FLOW CONTROL	CLOSED	____/____	____/____
CONDENSATE PUMPS RECIRC VALVE	CLOSED	____/____	____/____
FWTR BOOSTER PUMP RECIRC VALVE 11	CLOSED	____/____	____/____
FWTR BOOSTER PUMP RECIRC VALVE 12	CLOSED	____/____	____/____
FWTR BOOSTER PUMP RECIRC VALVE 13	CLOSED	____/____	____/____

Remarks: _____

CONTROL ROOM SYSTEM LINEUP VERIFICATION CHECKLIST

SYSTEM/COMPONENT DESCRIPTION	NORMAL POSITION/CONDITION	0630-1830 IN NORMALCONDITION (✓) COLUMN YES/NO	1830-0630 YES/NO
1.4 PANEL - F			
MOTOR FEEDWATER PUMP HIGH LEVEL TRIP BYPASS PUMP 11	NORMAL	____/____	____/____
MOTOR FEEDWATER PUMP HIGH LEVEL TRIP BYPASS PUMP 12	NORMAL	____/____	____/____
FEEDWATER ISOLATION VALVE 11	OPEN	____/____	____/____
FEEDWATER ISOLATION VALVE 12	OPEN	____/____	____/____
FEEDWATER PUMP 11 BLOCKING VALVE	OPEN	____/____	____/____
FEEDWATER PUMP 12 BLOCKING VALVE	OPEN	____/____	____/____
FEEDWATER PUMP 11 RECIRC V 111 29-23	CLOSED	____/____	____/____
FEEDWATER PUMP 11 RECIRC V 112 29-51	CLOSED	____/____	____/____
FEEDWATER PUMP 12 RECIRC V 121 29-24	CLOSED	____/____	____/____
FEEDWATER PUMP 12 RECIRC V 122 29-52	CLOSED	____/____	____/____
FW LVL SETPOINT SETDOWN	NORMAL	____/____	____/____
RMC-29-156 FWP 11 VALVE CONTROL, and/or RMC-29-157 FWP 12 VALVE CONTROL	CLOSED FOR FW PMP OFF	____/____	____/____
RMC-29-49B FWP 11 BYPASS VALVE	MANUAL, CLOSED	____/____	____/____
RMC-29-50B FWP 12 BYPASS VALVE	MANUAL, CLOSED	____/____	____/____
MAIN STEAM			
ANALOG TRIP SYSTEM CHANNEL 11 TROUBLE	RED LIGHT OFF	____/____	____/____
ANALOG TRIP SYSTEM CHANNEL 12 TROUBLE	RED LIGHT OFF	____/____	____/____
ADS INHIBIT CH. 11	KEYLOCKED NORMAL	____/____	____/____
ADS INHIBIT CH. 12	KEYLOCKED NORMAL	____/____	____/____
NR-108A ERV 111	CLOSED, BLUE AND GREEN LIGHTS ON	____/____	____/____
NR-108B ERV 112	CLOSED, BLUE AND GREEN LIGHTS ON	____/____	____/____
NR-108E ERV 113	CLOSED, BLUE AND GREEN LIGHTS ON	____/____	____/____
NR-108C ERV 121	CLOSED, BLUE AND GREEN LIGHTS ON	____/____	____/____
NR-108D ERV 122	CLOSED, BLUE AND GREEN LIGHTS ON	____/____	____/____
NR-108F ERV 123	CLOSED, BLUE AND GREEN LIGHTS ON	____/____	____/____

Remarks: _____

CONTROL ROOM SYSTEM LINEUP VERIFICATION CHECKLIST

SYSTEM/COMPONENT DESCRIPTION	NORMAL POSITION/CONDITION	0630-1830 IN NORMALCONDITION (✓) COLUMN YES/NO	1830-0630 IN NORMALCONDITION (✓) COLUMN YES/NO
RPS, ATWS & ARI			
CHANNEL 11 SCRAM SOLENOID GROUPS 1-4, and B.U. SCRAM S.D.V. VENT & DRAIN GROUP 5	ALL WHITE LIGHTS ON, RED LIGHT ON	____/____	____/____
ATWS. CH 11 REACTOR HI PRESS CH. 11-1 & 11-2, and REACTOR LO-LO LVL CH. 11-1 & 11-2	ALL RED LIGHTS OFF	____/____	____/____
ARI INITIATION CH. 11	RED LIGHT OFF	____/____	____/____
CHANNEL 12 SCRAM SOLENOID GROUPS 1-4, and B.U. SCRAM S.D.V. VENT & DRAIN GROUP 5	ALL WHITE LIGHTS ON, RED LIGHT ON	____/____	____/____
ATWS-ARI VALVE POSITION SOV/113-229A	GREEN LIGHT ON, RED LIGHT OFF	____/____	____/____
ATWS-ARI VALVE POSITION SOV/113-229B	GREEN LIGHT ON, RED LIGHT OFF	____/____	____/____
ARI OVERRIDE	KEYLOCKED NORMAL, RED LIGHT OFF	____/____	____/____
ATWS. CH 12 REACTOR HI PRESS CH. 12-1 & 12-2, and REACTOR LO-LO LVL CH. 12-1 & 12-2	ALL RED LIGHTS OFF	____/____	____/____
ARI INITIATION CH. 12	RED LIGHT OFF	____/____	____/____
CONTROL ROD DRIVE			
CRD FLOW CONTROL	AUTO	____/____	____/____
55-05 DEMIN WATER SUPPLY TO CRD SYS BLOCKING VALVE	CLOSED	____/____	____/____
CRD FLOW CONTROL VALVE 11 TRANSFER, CRD FLOW CONTROL VALVE 12 TRANSFER, AND VALVE 11 VALVE 12	VALVE 11 OR VALVE 12 SELECTED, VALVE THROTTLED	____/____	____/____
SCRAM DISCH VOL HLD TANK DISCHARGE BV 67-30	CLOSED	____/____	____/____
1.5 E CONSOLE			
SPDS COMPUTER SCREEN	SPDS ON DISPLAY	____/____	____/____
MECHANICAL PRESSURE REG	YELLOW LIGHT OFF	____/____	____/____
BYPASS OPENING JACK	YELLOW LIGHT OFF	____/____	____/____
ELECTRICAL PRESSURE REG	YELLOW LIGHT ON	____/____	____/____

Remarks: _____

CONTROL ROOM SYSTEM LINEUP VERIFICATION CHECKLIST

SYSTEM/COMPONENT DESCRIPTION	NORMAL POSITION/CONDITION	0630-1830 IN NORMALCONDITION (✓) COLUMN YES/NO	1830-0630 YES/NO
1.6 PANEL – A3			
SBC/STATION BATTERIES			
SBC 161A-B AC BKR	CLOSED	____/____	____/____
SBC 161A-B DC BKR	CLOSED	____/____	____/____
SBC 171A-B AC BKR	CLOSED	____/____	____/____
SBC 171A-B DC BKR	CLOSED	____/____	____/____
1.7 PANEL – A4			
DIESEL GENERATORS/600V/4160V POWER			
SYN SELECTOR R1022	MAN	____/____	____/____
R1022	OPEN	____/____	____/____
1.8 PANEL – A5			
SYN SELECTOR R1032	MAN	____/____	____/____
R1032	OPEN	____/____	____/____
1.9 PANEL – A6			
TAP CHGER CONT 101N	AUTO	____/____	____/____
TAP CHGER CONT 101S	AUTO	____/____	____/____
RECLOSING SELECTOR R915	SC	____/____	____/____
1.10 PANEL – A7			
AUTO RECLOSING R915	ON	____/____	____/____
AUTO RECLOSING R925	ON	____/____	____/____
1.11 PANEL – A8			
RECLOSING SELECTOR R925	SC	____/____	____/____
AUTO RECLOSING R10	ON	____/____	____/____
AUTO RECLOSING R40	ON	____/____	____/____

Remarks: _____

CONTROL ROOM SYSTEM LINEUP VERIFICATION CHECKLIST

SYSTEM/COMPONENT DESCRIPTION	NORMAL POSITION/CONDITION	0630-1830 IN NORMALCONDITION (✓) COLUMN YES/NO	1830-0630 YES/NO
1.12 PANEL – M			
RPS CH 11 INDICATIONS			
ELECT REL V. 111, 121, 112, 122, 113, 123, 2-1 16K207	ALL WHITE LIGHTS ON	____/____	____/____
SCRAM SOLENOID GROUPS (CH 11)	ALL WHITE LIGHTS ON	____/____	____/____
RPS 11-1 TRIP TEST POINTS	No Jumpers Installed	____/____	____/____
RPS 11-2 TRIP TEST POINTS	No Jumpers Installed	____/____	____/____
RPS CH 12 INDICATIONS			
ELECT REL V. 111, 121, 112, 122, 113, 123, 2-2 16K208	ALL WHITE LIGHTS ON	____/____	____/____
SCRAM SOLENOID GROUPS (CH 12)	ALL WHITE LIGHTS ON	____/____	____/____
RPS 12-1 TRIP TEST POINTS	No Jumpers Installed	____/____	____/____
RPS 12-2 TRIP TEST POINTS	No Jumpers Installed	____/____	____/____
1.13 PANEL – N			
CONTROL ROOM VENTILATION			
210-40 DAMPER	CLOSED	____/____	____/____
210-41 DAMPER	CLOSED	____/____	____/____
210-01 EMER FAN 11, and 210-02 EMER FAN 12	1 IN AUTO, 1 IN OFF	____/____	____/____
CONTROL ROOM CIRCULATING FAN AND CONTROL ROOM EMER FAN CONFIGURATION	LINEUP PER N1-OP-49 POWER SUPPLIED BY OPPOSITE BUSES	____/____	____/____

Shift Turnover Checklist Completed by Reactor Operator

_____ / _____
Signature Time

_____ / _____
Signature Time

All discrepancies discussed with CRS and noted in remarks section

_____ / _____
Signature Time

_____ / _____
Signature Time

Remarks: _____

RADWASTE CONTROL ROOM SYSTEM LINEUP VERIFICATION CHECKLIST

SYSTEM/COMPONENT DESCRIPTION	NORMAL POSITION/CONDITION	0630-1830 IN NORMAL CONDITION (✓) COLUMN YES/NO	1830-0630 IN NORMAL CONDITION (✓) COLUMN YES/NO
2.1 WASTE COLLECTOR FILTER PANEL			
AO 85-489 WCF DRAIN BV	CLOSED	____/____	____/____
AO 85-459 WCF OUTLET BV	OPEN IF FILTER IN SERVICE	____/____	____/____
AO 85-493 WCF PRECOAT INLET BV	CLOSED	____/____	____/____
AO 85-486 WCF PRECOAT OUTLET BV	CLOSED	____/____	____/____
AO 85-487 WCF BACKWASH BV	CLOSED	____/____	____/____
AO 85-456 WCF INLET BV	OPEN IF FILTER IN SERVICE	____/____	____/____
AO 85-491 WCF VENT BV	CLOSED	____/____	____/____
AO 85-492 WCF DOME DRAIN BV	CLOSED	____/____	____/____
AO 85-488 WCF AIR BUMP BV	CLOSED	____/____	____/____
WCF RECYCLE PUMP	AUTO-PUMP RUNNING IF FILTER IN SERVICE	____/____	____/____
PRECOAT PUMP	NEUTRAL/OFF	____/____	____/____
FILTER AID PUMP	OFF	____/____	____/____
2.2 FLOOR DRAIN FILTER PANEL			
AO 85.1-269 FDF DRAIN BV	CLOSED	____/____	____/____
AO 85.1-266 FDF OUTLET BV	OPEN IF FILTER IN SERVICE	____/____	____/____
AO 85.1-270 FDF PRECOAT INLET BV	CLOSED	____/____	____/____
AO 85.1-347 FDF PRECOAT OUTLET BV	CLOSED	____/____	____/____
AO 85.1-348 FDF BACKWASH BV	CLOSED	____/____	____/____
AO 85.1-343 FDF INLET BV	OPEN IF FILTER IN SERVICE	____/____	____/____
AO 85.1-267 FDF VENT BV	CLOSED	____/____	____/____
AO 85.1-268 FDF DOME DRAIN BV	CLOSED	____/____	____/____
AO 85.1-360 FDF AIR BUMP BV	CLOSED	____/____	____/____
FDF RECYCLE PUMP	AUTO-PUMP RUNNING IF FILTER IN SERVICE	____/____	____/____
FILTER AID PUMP	OFF	____/____	____/____

Remarks: _____

RADWASTE CONTROL ROOM SYSTEM LINEUP VERIFICATION CHECKLIST

SYSTEM/COMPONENT DESCRIPTION	NORMAL POSITION/CONDITION	0630-1830 IN NORMALCONDITION (✓) COLUMN YES/NO	1830-0630 YES/NO
2.3 Radwaste CP-1			
WASTE BLDG VENT EXHAUST FAN 11 WASTE BLDG VENT EXHAUST FAN 12	1 FAN ON **AND** 1 FAN OFF	____/____ ____/____	____/____ ____/____
WASTE BLDG VENT EXHAUST DISCH B.V. 11 WASTE DISPOSAL BLDG EXHAUST INLET B.V. 11 WASTE BLDG VENT EXHAUST DISCH B.V. 12 WASTE DISPOSAL BLDG EXHAUST INLET B.V. 12	OPEN FOR FAN ON, CLOSED FOR FAN OFF	____/____ ____/____ ____/____ ____/____	____/____ ____/____ ____/____ ____/____
WASTE BLDG VENT SUPPLY FAN 11 WASTE BLDG VENT SUPPLY FAN 12	1 FAN ON **AND** 1 FAN OFF	____/____ ____/____	____/____ ____/____
WASTE BLDG VENT SUPPLY SUCTION B.V. 11	OPEN/THROTTLED FOR FAN	____/____	____/____
WASTE BLDG VENT SUPPLY SUCTION B.V. 12	ON, CLOSED FOR FAN OFF	____/____	____/____
WASTE COLLECT. TK. CONDUCTIVITY	NORMAL	____/____	____/____
REACTOR BLD EQ DR TANK CLOSED LOOP COOLING	OPEN	____/____	____/____
WASTE COLLECTOR TANK CLOSED LOOP COOLING	OPEN	____/____	____/____
DISCHARGE STORAGE ROUTE	85-100 OPEN, 85-99 CLOSED	____/____	____/____
WASTE COLLECTOR P 11	NEUTRAL/STOP	____/____	____/____
WASTE COLLECTOR P 12	NEUTRAL/STOP	____/____	____/____
WASTE COLLECTOR PUMPS 11 & 12 CONDUCTIVITY	OFF	____/____	____/____
WASTE COLLECTOR PUMPS DISCH BV	OPEN	____/____	____/____
WASTE SURGE PUMP INLET BV	NEUTRAL/CLOSED	____/____	____/____
WASTE SURGE PUMP	NEUTRAL/STOP	____/____	____/____
WASTE SURGE PUMP DISCH ROUTE	OFF	____/____	____/____
DRYWELL EQUIP DR TKS INSIDE ISOL VALVE 11	OPEN	____/____	____/____
DRYWELL EQUIP DR TKS OUTSIDE ISOL VALVE 12	OPEN	____/____	____/____
WASTE COLLECTOR F DISCH BV	OPEN IF FILTER IN SERVICE	____/____	____/____
WASTE COLLECTOR F INLET BV	OPEN IF FILTER IN SERVICE	____/____	____/____
WCF FLOW CONTROL VLV AO	MANUAL, THROTTLED IF FILTER IN SERVICE	____/____	____/____
WASTE DEMINERALIZER INLET BV	OPEN	____/____	____/____
WASTE DEMINERALIZER DISCH BV	OPEN	____/____	____/____

Remarks: _____

RADWASTE CONTROL ROOM SYSTEM LINEUP VERIFICATION CHECKLIST

SYSTEM/COMPONENT DESCRIPTION	NORMAL POSITION/CONDITION	0630-1830 IN NORMALCONDITION (✓) COLUMN YES/NO	1830-0630 IN NORMALCONDITION (✓) COLUMN YES/NO
DEMINERALIZED WASTE ROUTE	AUTO, 45-02 OPEN, 45-39 CLOSED	____/____	____/____
DEMINERALIZED WASTE TO SAMPLE TKS SELECT	VARIES	____/____	____/____
WASTE SAMPLE PUMP 11	NEUTRAL/STOP	____/____	____/____
WASTE SAMPLE PUMP 11 RECIRCULATION BV	OPEN	____/____	____/____
WATE SAMPLE PUMP 11 FILTER BACKWASH BV	CLOSED	____/____	____/____
WASTE SAMPLE PUMP 11 DISCH BV	CLOSED	____/____	____/____
WASTE SYSTEM TELL TALE BV	OPEN	____/____	____/____
WASTE SAMPLE PUMP 12	NEUTRAL/STOP	____/____	____/____
WASTE SAMPLE PUMP 12 RECIRCULATION BV	OPEN	____/____	____/____
WASTE SAMPLE PUMP 12 FILTER BACKWASH BV	CLOSED	____/____	____/____
WASTE SAMPLE PUMP 12 DISCH BV	CLOSED	____/____	____/____
DISCHARGE FLOW CONTROL RMC 85-523	CLOSED	____/____	____/____
DISCHARGE FLOW BV SELECT	85-79 AND 85-27 OPEN, 85-78 AND 85-28 CLOSED OR 85-78 AND 85-28 OPEN, 85-79 AND 85-27 CLOSED	____/____ ____/____ ____/____	____/____ ____/____ ____/____
FLOOR DRAIN FILTER INLET BV	OPEN IF FILTER IN SERVICE	____/____	____/____
FLOOR DRAIN FILTER DISCH BV	OPEN IF FILTER IN SERVICE	____/____	____/____
FLOOR DRAINS TO SAMPLE TANKS SELECT	OFF	____/____	____/____
FLOOR DRAIN SAMPLE PUMP 11 INLET BV	NEUTRAL/CLOSED	____/____	____/____
FLOOR DRAIN SAMPLE PUMP 11	NEUTRAL/STOP	____/____	____/____
FLOOR DRAIN SAMPLE PUMP 11 RECIRC BV	NEUTRAL/CLOSED	____/____	____/____
FLOOR DRAIN SAMPLE PUMP 12 INLET BV	NEUTRAL/CLOSED	____/____	____/____
FLOOR DRAIN SAMPLE PUMP 12	NEUTRAL/STOP	____/____	____/____
FLOOR DRAIN SAMPLE PUMP 12 RECIRC BV	NEUTRAL/CLOSED	____/____	____/____
UTILITY COLLECTOR TK AGITATOR	NEUTRAL/START IF UCT ABOVE 34%	____/____	____/____
CONCENTRATOR FEED PUMPS 11 & 12 INLET BV	NEUTRAL/CLOSED	____/____	____/____
UTILITY COLLECTOR PUMP INLET BV	NEUTRAL/CLOSED	____/____	____/____
UTILITY COLLECTOR PUMP WASTE NEUTRALIZER PUMP INLET BYPASS BV	NEUTRAL/CLOSED	____/____	____/____
UTILITY COLLECTOR PUMP	NEUTRAL/STOP	____/____	____/____
UTILITY COLLECTOR PUMP DISCHARGE SELECT	OFF	____/____	____/____

Remarks: _____

RADWASTE CONTROL ROOM SYSTEM LINEUP VERIFICATION CHECKLIST

SYSTEM/COMPONENT DESCRIPTION	NORMAL POSITION/CONDITION	0630-1830 IN NORMALCONDITION (✓) COLUMN YES/NO	1830-0630 YES/NO
FDF FLOW CONTROL VLV AO	MANUAL, THROTTLED IF FILTER IN SERVICE	____/____	____/____
DRYWELL FL DR SUMP INSIDE ISOLATION VALVE 11	OPEN	____/____	____/____
DRYWELL FL DR SUMP OUTSIDE ISOLATION VALVE 12	OPEN	____/____	____/____
FLOOR DRAIN PUMP INLET BV	NEUTRAL/CLOSED	____/____	____/____
FLOOR DRAIN PUMP	NEUTRAL/STOP	____/____	____/____
FLOOR DRAIN PUMP DISCH BV	NEUTRAL/CLOSED	____/____	____/____
UCT/FDCT SELECTOR SWITCH	UCT OR FDCT	____/____	____/____
UCT/WNT SELECTOR SWITCH	UCT OR WNT	____/____	____/____
WASTE NEUTRALIZER PUMP INLET BV	NEUTRAL/CLOSED	____/____	____/____
WASTE NEUTRALIZER PUMP	NEUTRAL/STOP	____/____	____/____
WASTE NEUTRALIZER PUMP DISCH ROUTE	OFF	____/____	____/____
FLOCCULANT ADDITION PUMP	NEUTRAL/STOP	____/____	____/____
FILTER SLUDGE TO CLARIFIER FCV	MANUAL, CLOSED	____/____	____/____
CLARIFIER FLUSH WATER BV	NEUTRAL/CLOSED	____/____	____/____
FLOOR DRAIN SUMP #13 OVERFLOW BV	AUTO	____/____	____/____
FLOOR DRAIN SUMP #11 OVERFLOW BV	AUTO	____/____	____/____
FILTER SLUDGE TANK OVERFLOW BV	CLOSED	____/____	____/____
CLARIFIER OUTLET BV SELECT	VARIES	____/____	____/____
CLARIFIER OUTLET BV #11	KEYLOCKED, CLOSED	____/____	____/____
CLARIFIER OUTLET BV #12	KEYLOCKED, CLOSED	____/____	____/____
CLARIFIER INLET BV	CLOSED	____/____	____/____
FILTER SLUDGE STORAGE TANK BLOWER	NEUTRAL/STOP	____/____	____/____
SPENT RESIN PUMP FLUSH BV	CLOSED	____/____	____/____
CLEAN UP FILTER SLUDGE PUMP INLET BV	NEUTRAL/CLOSED	____/____	____/____
CLEAN UP FILTER SLUDGE PUMP FLUSH BV	CLOSED	____/____	____/____
CLEAN UP FILTER SLUDGE PUMP	NEUTRAL/STOP	____/____	____/____
CLEAN UP FILTER SLUDGE PUMP DISCH BV	CLOSED	____/____	____/____
WASTE FILTER SLUDGE PUMP INLET BV	NEUTRAL/CLOSED	____/____	____/____
WASTE FILTER SLUDGE PUMP FLUSH BV	CLOSED	____/____	____/____
WASTE FILTER SLUDGE PUMP	NEUTRAL/STOP	____/____	____/____
WASTE FILTER SLUDGE PUMP DISCH BV	CLOSED	____/____	____/____
FUEL POOL FILTER PUMP INLET BV	CLOSED	____/____	____/____
FUEL POOL FILTER PUMP FLUSH BV	CLOSED	____/____	____/____
FUEL POOL FILTER SLUDGE PUMP	NEUTRAL/STOP	____/____	____/____
FUEL POOL FILTER PUMP DISCH BV	CLOSED	____/____	____/____
WASTE TO FILTER SLUDGE STORAGE TANK BV	CLOSED	____/____	____/____

Remarks: _____

RADWASTE CONTROL ROOM SYSTEM LINEUP VERIFICATION CHECKLIST

SYSTEM/COMPONENT DESCRIPTION	NORMAL POSITION/CONDITION	0630-1830 IN NORMALCONDITION (✓) COLUMN YES/NO	1830-0630 IN NORMALCONDITION (✓) COLUMN YES/NO
CONC WASTE TK 12 DISCH BV	NEUTRAL/CLOSED	____/____	____/____
CONC WASTE TK 12 FLUSH BV	CLOSED	____/____	____/____
CONC WASTE PU 12 INLET BV	CLOSED	____/____	____/____
CONC. WASTE PUMP #12	NEUTRAL/STOP	____/____	____/____
CONC WASTE PU 12 DISCH BV	CLOSED	____/____	____/____
FILTER SLUDGE TRUCK FILL BV	KEYLOCKED, NEUTRAL/CLOSED	____/____	____/____
STEAM FLOW TO CONC #12 FCV	MANUAL, CLOSED	____/____	____/____
CONC #12 WASH SELECTOR SWITCH	OFF, 57-72 AND 57-73 CLOSED	____/____	____/____
FLOOR DRAIN SAMPLE TANK #11 BV	CLOSED	____/____	____/____
FLOOR DRAIN SAMPLE TANK #12 BV	CLOSED	____/____	____/____
WASTE NEUTRALIZER TANK INLET BV	CLOSED	____/____	____/____
CONC. FEED PUMP #12 INLET SELECT	OFF, 45-153 AND 45-289 CLOSED	____/____	____/____
CONCENTRATOR FEED PUMP #12	NEUTRAL/STOP	____/____	____/____
CONCENTRATOR FEED PUMP #12 DISCH BV	NEUTRAL/CLOSED	____/____	____/____
CONCENTRATOR CIRC. PUMP #12	NEUTRAL/STOP	____/____	____/____
CONC WASTE TK 12 LCV	MANUAL, CLOSED	____/____	____/____
CONC #12 DENSITY SETPOINT CONTROL	VARIES	____/____	____/____
CONCENTRATOR #12 DISCH ROUTE BV	VARIES	____/____	____/____
CONC. WASTE TRANSF. PU. #12 DISCH ROUTE	RECIRC, 45.4-51 OPEN, 45.4-50 CLOSED	____/____	____/____
CONC. #12 WASTE TRANSFER PU. #12	NEUTRAL/STOP	____/____	____/____
CONCENTRATED WASTE TRANSFER PU. INLET	CLOSED	____/____	____/____
CONCENTRATOR #12 FLUSH BV	CLOSED	____/____	____/____
WASTE BLDG. (EXT) EXHAUST FAN #13 WASTE BLDG. (EXT) EXHAUST FAN #14	1 FAN ON **AND** 1 FAN OFF	____/____ ____/____	____/____ ____/____
WASTE BLDG. (EXT) EXHAUST DISCH BV #13 WASTE BLDG. (EXT) EXHAUST SUPPLY BV #13 WASTE BLDG. (EXT) EXHAUST DISCH BV #14 WASTE BLDG. (EXT) EXHAUST SUPPLY BV #14	OPEN FOR FAN ON, CLOSED FOR FAN OFF	____/____ ____/____ ____/____ ____/____	____/____ ____/____ ____/____ ____/____
CONC. #12 DISTILLATE ROUTING RMS 45-284	LO, 45-266 OPEN, 45-267 CLOSED	____/____	____/____

Remarks: _____

ATTACHMENT 3: TEST PERSONNEL SIGNATURE AND INITIAL LOG

NOTE: Completing this attachment signifies that each person has reviewed the applicable portions of this procedure.

PRINTED NAME	SIGNATURE	INITIALS
Tony Hall	[illegible]	TRH

NRC JPM RO/SRO COO2
Constellation Energy Group
NINE MILE POINT UNIT 1
OPERATOR JOB PERFORMANCE MEASURE

Title: Determine Personnel Overtime Availability IAW GAP-FFD-02 Revision: NRC 2008

Task Number: N/A

Approvals:

/ 8/14/2008
General Supervisor Date
Operations Training (Designee)

N/A – Exam Security /
General Supervisor Date
Operations (Designee)

N/A – Exam Security /
Configuration Control Date

Performer:_____(RO/SRO)

Trainer/Evaluator:_____

Evaluation Method: Perform

Evaluation Location: Classroom

Expected Completion Time: 20/30 minutes (RO/SRO) Time Critical Task: No Alternate Path Task: No

Start Time: _____ Stop Time:_____ Completion Time:_____

JPM Overall Rating: Pass Fail

NOTE: A JPM overall rating of fail shall be given if any critical step is graded as fail. Any grade of unsat or individual competency area unsat requires a comment.

Comments:

Evaluators Signature:_____ Date:_____

Recommended Start Location: Classroom

Simulator Set-up: None

Directions to the Instructor/Evaluator:

None

Directions to Operators:

Read Before Every JPM Performance:

For the performance of this JPM, I will function as the SM, CSO, and Auxiliary Operators. Prior to providing direction to perform this task, I will provide you with the initial conditions and answer any questions. During task performance, I will identify the steps to be simulated, or discuss and provide cues as necessary.

Read Before Each Evaluated JPM Performance:

This evaluated JPM is a measure of your ability to perform this task independently. The Control Room Supervisor has determined that a verifier is not available and that additional / concurrent verification will not be provided; therefore it should not be requested.

Read Before Each Training JPM Performance:

During this Training JPM, applicable methods of verification are expected to be used. Therefore, either another individual or I will act as the additional / concurrent verifier.

Notes to Instructor / Evaluator:

1. Critical steps are identified in grading areas as **Pass/Fail**.
2. During Evaluated JPM:
   - Self verification shall be demonstrated.
3. During Training JPM:
   - Self verification shall be demonstrated.
   - No other verification shall be demonstrated.

References:

1. GAP-FFD-02

Tools and Equipment:

1. Calculator

Task Standard: Determine Personnel Availability for Overtime IAW GAP-FFD-02.

Initial Conditions:

1. The plant is shutdown.
2. In order to support critical path work required for startup, personnel overtime will be required for the night shift on October 26 from 1830-0630.
3. All the overtime hours will be spent performing (ROs) or supervising (SROs) field activities.

Initiating Cues:

1. From the provided list of personnel working hours, determine who is eligible to work a complete 12 hours of overtime beginning at 1830 on October 26 without requiring an Overtime Deviation Request IAW GAP-FFD-02.

2. If an Overtime Deviation Request would be required for individual(s), state the work hour limit(s) which would be exceeded IAW GAP-FFD-02.

3. SROs ONLY – Complete the appropriate sections of an Overtime Deviation Request Form for all individuals who would need a deviation approved to cover the shift.

EXAMINER NOTE: FOR ROs – Provide Attachments A & C.
FOR SROs – Provide Attachments A, B & D, and Blank Overtime Deviation Request Form.

Performance Steps	Standard	Grade
1. Provide repeat back of initiating cue. *Evaluator Acknowledge repeat back providing correction if necessary.*	Proper communications used for repeat back (GAP-OPS-O1/Operations Manual)	Sat/Unsat
RECORD START TIME _____		
2. Obtain a copy of the reference procedure and review/utilize the correct section of the procedure.	GAP-FFD-02 obtained	Sat/Unsat

3.	**FOR ROs** - Reviews work hours for Reactor Operators 1 thru 3	ROs - Determines the following: RO #1 – Eligible RO #2 – Not Eligible – would exceed 72 hours in 7 day period RO #3 – Not Eligible – would exceed 24 hours in a 48 hour period	**Pass/Fail**
	FOR SROs - Reviews work hours for Reactor Operators 1 thru 3 and Senior Reactor Operators 1 and 2	SROs – Determines the above limitations plus the following: SRO #1 – Eligible SRO #2 – Not Eligible – would exceed 16 hours in a 24 hour period	
4.	**FOR SROs** – Completes Overtime Deviation Request Form	Completes Columns 1 and 2 of Part 1 of GAP-FFD-02 Attachment 1, per attached key	**Pass/Fail**
		Completes Columns 3 and 4 of Part 1 of GAP-FFD-02 Attachment 1, per attached key	Sat/Unsat
		Completes Part 2 of GAP-FFD-02 Attachment 1, per attached key	Sat/Unsat

TERMINATING CUE: FOR ROs, JPM Attachment C completed. **FOR SROs**, JPM Attachment D and GAP-FFD-02 Attachment 1 completed

RECORD STOP TIME _____

ATTACHMENT A - ROs

RO #1							
10/19	10/20	10/21	10/22	10/23	10/24	10/25	10/26
1830-0642 (includes 12 minutes of turnover time)	1830-0642 (includes 12 minutes of turnover time)	OFF	1830-0730 (includes 60 minutes of turnover time)	1830-0542 (includes 12 minutes of turnover time)	1830-0642 (includes 12 minutes of turnover time)	1830-0706 (includes 36 minutes of turnover time)	OFF

RO #2							
10/19	10/20	10/21	10/22	10/23	10/24	10/25	10/26
OFF	1830-0642 (includes 12 minutes of turnover time)	1830-0630 (includes 0 minutes of turnover time)	1830-0642 (includes 12 minutes of turnover time)	1830-0654 (includes 24 minutes of turnover time)	1830-0642 (includes 12 minutes of turnover time)	1830-0642 (includes 12 minutes of turnover time)	OFF

RO #3							
10/19	10/20	10/21	10/22	10/23	10/24	10/25	10/26
1830-0642 (includes 12 minutes of turnover time)	1830-0630 (includes 0 minutes of turnover time)	1830-0648 (includes 18 minutes of turnover time)	1830-0642 (includes 12 minutes of turnover time)	1830-0642 (includes 12 minutes of turnover time)	OFF	1830-0742 (includes 12 minutes of turnover time)	OFF

ATTACHMENT B - SROs

SRO #1							
10/19	10/20	10/21	10/22	10/23	10/24	10/25	10/26
1830-0642 (includes 12 minutes of turnover time)	1830-0642 (includes 12 minutes of turnover time)	OFF	1830-0735 (includes 65 minutes of turnover time)	OFF	1830-0642 (includes 12 minutes of turnover time)	1830-0720 (includes 50 minutes of turnover time)	OFF

SRO #2							
10/19	10/20	10/21	10/22	10/23	10/24	10/25	10/26
1830-0642 (includes 12 minutes of turnover time)	1830-0630 (includes 0 minutes of turnover time)	1830-0648 (includes 18 minutes of turnover time)	1830-0642 (includes 12 minutes of turnover time)	OFF	0630-1830 (includes 0 minutes of turnover time)	OFF	0500-1200 (includes 0 minutes of turnover time)

ATTACHMENT C – RO Answer Sheet

	Eligible to work without an Overtime Deviation Request? (Yes/No)	If No, what work hour limit(s) would be exceeded IAW GAP-FFD-02?
RO #1		
RO #2		
RO #3		

ATTACHMENT D – SRO Answer Sheet

	Eligible to work without an Overtime Deviation Request? (Yes/No)	If No, what work hour limit(s) would be exceeded IAW GAP-FFD-02?
RO #1		
RO #2		
RO #3		
SRO #1		
SRO #2		

Initial Conditions:

1. The plant is shutdown.
2. In order to support critical path work required for startup, personnel overtime will be required for the night shift on October 26 from 1830-0630.
3. All the overtime hours will be spent performing (ROs) or supervising (SROs) field activities.

Initiating Cues:

1. From the provided list of personnel working hours, determine who is eligible to work a complete 12 hours of overtime beginning at 1830 on October 26 without requiring an Overtime Deviation Request IAW GAP-FFD-02.

2. If an Overtime Deviation Request would be required for individual(s), state the work hour limit(s) which would be exceeded IAW GAP-FFD-02.

3. SROs ONLY – Complete the appropriate sections of an Overtime Deviation Request Form for all individuals who would need a deviation approved to cover the shift.

Constellation Energy

Nine Mile Point Nuclear Station
Station Administrative Procedure

GAP-FFD-02

CONTROL OF WORKING HOURS

Revision 01700

50.59 Review

Tech Spec.

INFORMATION USE

Applicable To:

☒ **Nine Mile Point Nuclear Station, Units 1 and 2**

Sponsor: Director-Licensing (NMP)

Approval Authority: Plant General Manager

SUMMARY OF ALTERATIONS

Revision	Change	Summary of Revision or Change
017	**00**	Reworded Section 5.3.A
		Section 7: Added guidance for retention of monthly overtime reports.

TABLE OF CONTENTS

SECTION	TITLE	PAGE
1.0	INTRODUCTION	4
1.1	Purpose	4
1.2	Scope/Applicability:	4
2.0	REFERENCES	4
2.1	Developmental References	4
2.2	Performance References	4
3.0	DEFINITIONS	4
4.0	RESPONSIBILITIES	5
5.0	PROCESS	5
5.1	Work Hour Limits	5
5.2	Exceeding Work Hour Limits	6
5.3	Review of Overtime Worked / Independent Review	9
6.0	BASES	9
7.0	RECORDS	9
Attachment 1, OVERTIME DEVIATION REQUEST		10

1.0 INTRODUCTION

1.1 Purpose

A. To establish administrative controls necessary for the implementation of technical specification requirements on individual working hours.

B. To ensure Station Personnel are physically/mentally fit for duty to perform job duties during extended working hour periods.

1.2 Scope/Applicability:

A. The work hour limits specified in Section 5.1.B of this procedure apply to all station and non-station personnel working at NMP.

B. The documentation requirements of Section 5.2.E apply only to personnel who perform or directly supervise those who perform safety-related functions, specially:

- Licensed senior reactor operators, reactor operators, and non-licensed operators.
- Chemistry, Radiation Protection, and Reactor Analyst Technicians.
- Key Maintenance personnel as defined in Section 3.B.
- Personnel who perform inspections, examinations, or tests on safety-related Structures, Systems or Components. **[N003]**

2.0 REFERENCES

2.1 Developmental References

A. Unit 1 Technical Specifications, Section 6.2.2, Unit Staff

B. Unit 2 Technical Specifications, Section 5.2.2, Unit Staff

C. Unit 2 USAR, Section 1.1.0, Position on NUREG-0737 – I.A.1.3, Shift Manning

2.2 Performance References

None

3.0 DEFINITIONS

A. 7 Day Period

A seven calendar day rolling period beginning at 0000 hours on the first day and ending at 2400 hours on the seventh day. **[N002]**

3.0 (Continued)

B. Key Maintenance Personnel

Those personnel who are responsible for the correct performance of maintenance, repair, modification or calibration of safety-related structures, systems, and components, and those personnel who are performing or immediately supervising the performance of such activities (reference GL 83-14).

4.0 RESPONSIBILITIES

The following individuals and organizations are assigned responsibilities within this procedure:

A. Plant General Manager

B. Managers/Directors

C. General Supervisors/Supervisors

D. Individuals who work in excess of the limitations stated in Section 5.1 of this procedure

5.0 PROCESS

5.1 Work Hour Limits

NOTE

Work hour limits are established to ensure that individuals performing activities that directly impact personnel safety and the safe and reliable operation of the plant are not overly fatigued such that their mental alertness and decision-making ability might be impaired.

A. Managers/Directors shall ensure adequate shift coverage is maintained without routine heavy use of overtime. The objective shall be to have operating personnel work a normal 8-12 hour day, nominal 40-hour week while the facility is operating.

B. However, when circumstances dictate working beyond scheduled working hours, the following limitations apply:

5.1 (Continued)

NOTE

For criteria in Section 5.1.B.1 below, turnover time should NOT be included. Turnover time of greater than 1 hour for any individual tour of duty is not exempted from individual overtime hours.

The below periods are consecutive rolling periods and are not based on calendar work weeks.

1. Individuals identified in Section 1.2 should not be permitted to work more than:

   a. 16 hours straight

   b. 16 hours in any 24 hour period

   c. 24 hours in any 48 hour period

   d. 72 hours in any 7 day period

2. Work in excess of these limits shall NOT be routinely authorized.

C. There should be a break in an individual's work schedule of at least 8 hours following a work period for which work goes beyond the limitations in Step 5.1.B.

D. The requirements and limits specified in Steps 5.1.B and 5.1.C apply to all hours worked if any portion of an individual's total work time is spent performing or supervising field activities.

E. Individuals working a 12 hour shift schedule, who, as a result of transition in and out of daylight savings time, will exceed the 24 hours in any 48 hour period guideline, are authorized to deviate from the guideline for the one hour transition period. No Overtime Deviation Request is required to be completed for this deviation.

5.2 Exceeding Work Hour Limits

A. It is recognized that deviations from the "Work Hour Limits" may occasionally occur. The use of overtime should be limited to circumstances where essential work must be done on an accelerated schedule and, except during extended shutdown periods, should be considered on an individual basis and not for the entire staff on a shift.

5.2 (Continued)

B. Circumstances that may warrant deviating from the guidelines of Section 5.1 include, but are not limited to:

- To respond to a Limiting Condition for Operation (LCO).
- To complete a work activity where it is safer to complete than to secure.
- To complete work affecting critical path during a shutdown.
- To complete work on a problem immediately affecting nuclear or industrial safety.
- Absenteeism.
- Weather-related extension of work periods.

C. All paid overtime should be approved by authorized supervision before the overtime is worked.

D. The following are the requirements applicable to personnel who do NOT perform or directly supervise those who perform safety-related functions. Refer to Section 5.2.E for additional guidance.

1. Personnel shall track their work hours and notify their supervisors if they expect to reach the limits of Section 5.1.

2. Prior to exceeding any of the work hour limits in Section 5.1, personnel shall obtain verbal approval from their Supervisor, General Supervisor, Director, or Manager. Approval shall be given only if the following conditions are met:

   - The work activity is necessary to support safe and reliable operation of the plant.

     AND

   - Other personnel cannot reasonably be made available to perform the work activity.

3. Personnel shall generate a Condition Report if work hour limits were exceeded without obtaining prior approval.

4. Supervisors shall:

   a. Ensure personnel are fit for duty at all times.

   b. Make more frequent direct observations of personnel exceeding work hour limits.

5.2 (Continued)

NOTE

The following personnel are required to complete Overtime Deviation Requests:

- Operations – Personnel below General Supervisor level (except OPS Support)
- Maintenance – Personnel below General Supervisor level
- Chemistry – Supervisors and below
- Rad Protection – Supervisors and below
- Radwaste – Supervisors and below
- Personnel who *perform* inspection of *safety related* equipment including:
  - Quality Inspection Personnel
  - Inservice Inspection and Test Personnel
  - Contract Inspection Personnel **[N004]**

E. The following are the requirements applicable to personnel who perform or directly supervise those who perform safety-related functions.

1. Except as allowed in Section 5.2.D, Supervisors of personnel who expect to exceed the limitations of Section 5.1 shall complete Attachment 1, Overtime Deviation Request.

   a. The supervisor shall sign the Overtime Deviation Request form. The signature attests that the supervisor has verified:

      - No one will work greater than 84 hours, exclusive of turnover time, in a 7-day period.
      - Personnel will be periodically monitored to assess their fitness for duty, and to take action as appropriate, to ensure worker fatigue does not jeopardize nuclear or personnel safety.

   b. Except for unusual and unanticipated circumstances, overtime should be planned in advance. Blanket overtime deviations will not be approved. **[N0001]**

2. Attachment 1, Overtime Deviation Request shall be forwarded to the applicable Department Manager or Director for review and concurrence.

3. Attachment 1, Overtime Deviation Request shall be approved in advance of exceeding limits by the Plant General Manager or higher level of management.

5.2 (Continued)

4. Completed Attachment 1's shall be forwarded to the Administrative Assistant to the Plant General Manager.

5.3 Review of Overtime Worked / Independent Review

A. The Director of Human Resources (HR) shall ensure that overtime is reviewed on a monthly basis. The scope of monthly review shall include personnel identified in Section 1.2.B of this procedure to assure excessive hours have not been worked. It will be documented in a monthly report and supplied to the Plant General Manager.

B. If the review determines that excessive hours of overtime have been assigned then a Condition Report shall be initiated.

6.0 BASES

[N001] NCTS 503524-10, NMPC will review all department's methods of overtime control and tracking.

[N002] DER C-95-3190 Provide definition for 7-day period.

[N003] DER C-91-Q-0464 Ensure overtime controls are applicable to personnel who perform safety-related functions (including contractors) as expressed in NRC Information Notice 91-36.

[N004] DER NM-2001-1737 Apparent reliance on the excessive use of overtime deviations to complete RFO16.

7.0 RECORDS

Completed Attachment 1's, Overtime Deviation Request, shall be retained by the Administrative Assistant to the Plant General Manager for one year and then may be discarded.

Completed monthly independent Overtime Report shall be maintained by the Human Resources Department for one year and then may be discarded.

LAST PAGE

Attachment 1, OVERTIME DEVIATION REQUEST

OVERTIME DEVIATION REQUEST

PART 1 - TYPE OF OVERTIME DEVIATION

1. More than 16 consecutive hours
2. More than 16 hours in any 24 hour period
3. More than 24 hours in a 48 hour period
4. More than 72 hours in a 7 day period
5. Less than 8 hour break between work periods

Name of Personnel **(List Names Individually)**	TYPE OF OVERTIME DEV. (1-5)	TIME PERIOD OF DEVIATION	
		FROM (DATE/TIME)	TO (DATE/TIME)

PART 2 –

A. Reason for Deviation

B. Method to monitor employee physical/mental fitness

Supervisor (Print/Signature)*	Date
Manager (Print/Signature)	Date

Note: Ensure deviation is approved by the Plant General Manager before scheduling overtime.

***Upon signing, the Supervisor** has verified :1) that no one will work greater than 84 hours, exclusive of turnover time, in a 7-day period. AND 2) that personnel will be periodically monitored to assess their fitness for duty, and to take action as appropriate, to ensure worker fatigue does not jeopardize nuclear or personnel safety.

PART 3 – Additional Actions

Plant General Manager Approval	Date

Approved Overtime Deviation request forms to be retained in the Plant General Manager's Office in accordance with NIP-RMG-01.

NRC JPM RO EC
Constellation Energy Group
NINE MILE POINT UNIT 1
OPERATOR JOB PERFORMANCE MEASURE

Title: Perform Daily Thermal Limit Surveillance Revision: NRC 2008

Task Number: N/A

Approvals:

8/14/2008

General Supervisor Date
Operations Training (Designee)

N/A – Exam Security
General Supervisor Date
Operations (Designee)

N/A – Exam Security
Configuration Control Date

Performer:_____ (RO)

Trainer/Evaluator:_____

Evaluation Method: Perform

Evaluation Location: Classroom

Expected Completion Time: 20 minutes Time Critical Task: No Alternate Path Task: No

Start Time: _____ Stop Time:_____ Completion Time:_____

JPM Overall Rating: Pass Fail

NOTE: A JPM overall rating of fail shall be given if any critical step is graded as fail. Any grade of unsat or individual competency area unsat requires a comment.

Comments:

Evaluator Signature:_____ Date:_____

Recommended Start Location: Classroom

Simulator Set-up: N/A

Directions to the Instructor/Evaluator:

1. Must have 3D Monicore cases from two consecutive days. The cases must be for four loop operation, with the MAPRAT correction factor incorrectly set to 1.000.
2. Must have N1-RESP-1 completed up to section 9.2.

Directions to Operators:

Read Before Every JPM Performance:

For the performance of this JPM, I will function as the SM, CSO, and Auxiliary Operators. Prior to providing direction to perform this task, I will provide you with the initial conditions and answer any questions. During task performance, I will identify the steps to be simulated, or discuss and provide cues as necessary.

With the exception of accessing panels, NO plant equipment will be physically manipulated. Repositioning of devices will be simulated by discussion and acknowledged by my cues.

Read Before Each Evaluated JPM Performance:

This evaluated JPM is a measure of your ability to perform this task independently. The Control Room Supervisor has determined that a verifier is not available and that additional / concurrent verification will not be provided; therefore, it should not be requested.

Read Before Each Training JPM Performance:

During this Training JPM, the use of applicable methods of verification and checking are expected. Therefore, either another individual or I will act as the independent verifier or peer checker.

Notes to Instructor / Evaluator:

1. Critical steps are identified in grading areas **Pass/Fail**.
2. During Evaluated JPM:
   - Self checking shall be demonstrated.
3. During Training JPM:
   - Self checking shall be demonstrated.
   - Peer checking shall be demonstrated.

References:

1. N1-RESP-1
2. N1-OP-16, Att.4
3. 3D Monicore Cases

Tools and Equipment:

1. None

Task Standard: Daily thermal limit surveillance completed in accordance with N1-RESP-1, section 9.2, with all discrepancies identified.

Initial Conditions:
1. The plant is operating at approximately 100% power.
2. No change in power or control rod movement has occurred since the current 3D Monicore case was generated.
3. Recirc Pump 14 is secured and isolated for maintenance on the MG set.
4. The following data is provided:
   Computer Point A-390 reads 349 degrees F
   Computer Point A-392 reads 352 degrees F
   LEFM Flow correction factor process computer point J385 reads 0.99900
   LEFM Flow correction factor process computer point J386 reads 0.99070
   LEFM Flow correction factor from CRC Book - West = 0.99900
   LEFM Flow correction factor from CRC Book - East = 0.99070
5. Ask the Candidate if they have any questions.

Initiating cue:
"(Operator's name), perform the Daily Thermal Limit Surveillance in accordance with N1-RESP-1, section 9.2."

EXAMINER NOTE: Provide copies of N1-RESP-1 and 3D monicore case edits (current and previous day). DO NOT provide N1-OP-16, Att.4 unless the procedure is requested

Performance Steps	*Standard*	*Grade*
1. Provide repeat back of initiating cue. *Evaluator Acknowledge repeat back providing correction if necessary*	Proper communications used for repeat back (GAP-OPS-O1)	Sat/Unsat
RECORD START TIME ____		
2. Obtain a copy of the reference procedure and review/utilize the correct section.	N1-RESP-1 and 3D Monicore casess obtained	Sat/Unsat
3. Complete N1-RESP-1, section 9.2.	N1-RESP-1 completed per the key	Sat/Unsat
Note: Refer to KEY for completed surveillance.	The following discrepancies are identified:	
Cue: If asked how to proceed at step 9.2.5 with the incorrect MAPRAT correction factor, state that Reactor Engineering has corrected the MAPRAT correction factor to 0.98 and all other numbers on the 3D Monicore case have been verified correct. Direct the candidate to continue at step 9.2.5 with the values listed on the 3D Monicore case.	Step 9.2.4 – MAPRAT CORRECTION FACTOR = 1.00 on the 3D monicore case, it should = 0.98 with 4 loop operation.	**Pass/Fail**
	Step 9.2.15 – West Feedwater temperature (Pt A-390) is < 351 degrees F. Per N1-OP-16, Att.4, the minimum required temperature is 349.9 degrees F.	**Pass/Fail**
	Step 9.2.16 – Notifies Operations to restore feedwater temperature to within specification and inform Reactor	**Pass/Fail**

Performance Steps	*Standard*	*Grade*
	Engineering supervision.	

TERMINATING CUE: Daily thermal limit surveillance completed in accordance with N1-RESP-1, section 9.2, with all discrepancies identified.

RECORD STOP TIME_____

Initial Conditions:

1. The plant is operating at approximately 100% power.
2. No change in power or control rod movement has occurred since the current 3D Monicore case was generated.
3. Recirc Pump 14 is secured and isolated for maintenance on the MG set.
4. The following data is provided:
   Computer Point A-390 reads 349 degrees F
   Computer Point A-392 reads 352 degrees F
   LEFM Flow correction factor process computer point J385 reads 0.99900
   LEFM Flow correction factor process computer point J386 reads 0.99070
   LEFM Flow correction factor from CRC Book - West = 0.99900
   LEFM Flow correction factor from CRC Book - East = 0.99070

Initiating cue:

"(Operator's name), perform the Daily Thermal Limit Surveillance in accordance with N1-RESP-1, section 9.2."

NIAGARA MOHAWK POWER CORPORATION

NINE MILE POINT NUCLEAR STATION UNIT 1

REACTOR ENGINEERING SURVEILLANCE PROCEDURE

N1-RESP-1

REVISION 04

DAILY THERMAL LIMIT SURVEILLANCE

TECHNICAL SPECIFICATION REQUIRED

Approved by:
M. A. Balduzzi

FOR MA BALDUZZI
Manager Operations - Unit I

9-26-96
Date

SATELLITE MASTER
COPY
TRAINING ONLY

THIS PROCEDURE SUPERSEDES N1-REP-18

THIS IS A FULL REVISION

Effective Date: 10/07/96

CONTROLLED WORKING COPY
VERIFIED BY [illegible]
NOT TO BE USED AFTER Tomorrow 1800
DATE/TIME

TABLE OF CONTENTS

SECTION		PAGE
1.0	PURPOSE	1
2.0	REFERENCES AND COMMITMENTS	1
3.0	DEFINITIONS	3
4.0	RESPONSIBILITIES	3
5.0	TEST EQUIPMENT, SPECIAL TOOLS, AND MATERIALS	4
6.0	PRECAUTIONS	4
7.0	LIMITATIONS AND ACTIONS	4
8.0	PREREQUISITES	4
9.0	PROCEDURE	5
	9.1 Preliminary Actions	5
	9.2 Thermal Limit Verification	5
	9.3 APRM Readings Verification	8
	9.4 This step deleted	
	9.5 Power to Flow Determination at < 25% CTP	10a
10.0	RETURN TO NORMAL	11
11.0	ACCEPTANCE CRITERIA	11
12.0	RECORD REVIEW AND DISPOSITION	11
ATTACHMENT 1:	This attachment deleted	
ATTACHMENT 2:	POWER FLOW RATIO DETERMINATION	13

2.1.2 (Cont)

- Table 4.6.2g(3), Instrumentation that Initiates Control Rod Withdrawal Block, APRM

2.1.3 Limiting Condition for Operation

- Section 3.1.7a, Average Planar Linear Heat Generation Rate (APLHGR)
- Section 3.1.7b, Linear Heat Generation Rate (LHGR)
- Section 3.1.7c, Minimum Critical Power Ratio (MCPR)
- Section 3.1.7d, Power Flow Relationship During Operation
- Section 3.1.7e, Partial Loop Operation
- Section 3.6.2(b), Protective Instrumentation, Core Maximum Fraction of Limiting Power Density

2.2 Policies, Programs, and Procedures

2.2.1 N1-REP-31, Manual Monitor

2.2.2 N1-REP-8, Core Thermal Power

2.2.3 N1-REP-18, Power Flow Ratio

2.2.4 N1-REP-12, APRM Gain Adjustment

2.2.5 N1-REP-12a, APRM Gain Adjustment During 3 Loop Operation

2.2.6 N1-TDP-DES-001, Computer Software Control

2.2.7 N1-REP-30, 3D Monicore Databank Changes

2.2.8 N1-OP-16, Feedwater System Booster Pump to Reactor

2.3 Technical Information

2.3.1 Station Nuclear Engineering Manual, Volumes 1A, 1B and 2, NEDE-24810 and 3D Monicore Monitor and Predictor Manual NEDE-31307P-F Class III

2.3.2 Nine Mile Point Process Computer, Operations and Maintenance Instructions, GEK 27782D, GE

2.3.3 3D Monicore System, Operation and Maintenance Instructions, GEK-97237

2.3.4 Core Operation Limits Report (COLR)

2.3.5 10CFR 50.46 Notification letter 2003-05 Draft B May 11, 2004.

4.2 Reactor Analyst Technician or Reactor Operator

The Reactor Analyst Technician or Reactor Operator shall:

Complete this procedure

4.3 Shift Technical Advisor (STA)

The STA shall:

- Review completed Surveillance.
- Verify Technical Specification compliance.

5.0 TEST EQUIPMENT, SPECIAL TOOLS, AND MATERIALS

None

6.0 PRECAUTIONS

None

7.0 LIMITATIONS AND ACTIONS

7.1 The Reactor Engineering Supervisor (or alternate) must be notified immediately whenever a procedural step cannot be completed as stated or if any other problem develops during the surveillance.

7.2 For reportable problems encountered (i.e. Thermal Limit exceeded) during the surveillance, contact the SSS and the Reactor Engineering Supervisor (or alternate) immediately and upon completion of surveillance. Submit a Deviation Event Report (DER).

7.3 Certain steps in Sections 9.3 and 9.4 may be marked not applicable (N/A) when APRMs do not require adjustment.

7.4 If feedwater temperature is less than the values listed in Table 1, while reactor power is greater than 80%, then reduce power to less than 80% rated power or restore temperature to allowable values per Table 1.

7.5 Sections 9.2 thru 9.4 are only required to be performed when Core Thermal Power (CTP) is ≥25%. Section 9.5 shall only be performed when CTP is < 25%. This section has been added to assure compliance with T.S. 4.1.7.d.

7.6 If the process computer CTP calculation (OD-3) is calculating CTP from APRMs, adjusting APRMs will invalidate the CTP computer point until the process computer performs a normal heat balance.

8.0 PREREQUISITES — Initials

8.1 Plant Conditions

8.1.1 Verify no recirculation flow changes or control rod movements have occurred during data acquisition (i.e., during 3D Monitor or manual data collection). TRH

KEY

Initials

NOTE: When completing the N1-RESP-1 Surveillance, compare the previous day's limiting parameters with the current day's parameters. Significant changes in thermal limit values, their core location (including AXIAL), OR heat balance parameters (i.e. Feedwater Temperature) should be brought to the attention of the STA and/or a Reactor Engineer.

9.2.1 IF core thermal power has changed by > 10 MWth or control rods have been moved since the last 3D Monicore edit, THEN obtain a new 3D case before proceeding. TRH

NOTES:
1. The 3D Monicore case (Periodic Log) OR Computer Point H305, CTP 10 MIN SMOOTHED MWTH, may be used for step 9.2.2.
2. Do NOT use 3D Monicore (Periodic Log) if 3D Monicore is calculating Core Thermal Power based on APRMs.

9.2.2 Record POWER MWT and CORE POWER (%).

1848.3 MWth (≤ 1850 MWth) 99.9 % (≤ 100%) TRH

9.2.3 Record FLOW MLB/HR and CORE FLOW (%).

60.57 Mlb/hr (≤ 67.5 Mlb/hr) 89.7 % (≤ 100%) TRH

KEY

Initials

NOTE: Attachment 2 corrects total core flow input to PFR determination when recirc loops are out of service and unisolated. If Core Flow ≥ 90%, this correction is **not necessary** because PFR will equal Fraction of Rated Power (i.e. PFR - .999 at 99.9% rated power.)

9.2.8 IF reactor recirc pumps are out of service and unisolated AND Core Flow < 90% of rated, THEN perform Attachment 2 for Power to Flow Ratio (PFR) determination with corrected total core flow.

Step is N/A . . . . . (✓) _____

9.2.9 [T/S] Record Power to Flow Ratio (PFR) from 3D Monicore or Attachment 2.

0.999
(≤ 1.00) TRH

NOTE: PFR will equal 1.00 if CMWT = 1850. (and recirc flow >85%)

9.2.10 IF operating without a backup Pressure Regulator AND Core Thermal Power is between 45% and 90% RTP, THEN obtain adjusted MFLPD limits from Core Operating Limits Report. Record actual CMFLPD value AND verify that value is less than or equal to adjusted MFLPD limit.

_____ _____ _____
Adjusted LHGR limit Current value

Ind. Verif.

Step is N/A . . . . . (✓)

9.2.11 [T/S] Record Maximum Fraction of Linear Heat Generation Rate (MFLPD) and location (LOC).

0.923 23-34-5
(≤ 1.00) Location TRH

9.2.12 Record Full Power Adjusted Power Density Ratio (FPAPDR).

FPAPDR = 0.924 (≤ 1.0) TRH

9.2.13 IF FPAPDR > 1.0 THEN the acceptance criteria will be met if APRM's are adjusted per Section 9.3.4.b.

Step is N/A . . . . . (✓) _____

Initials

9.3 APRM Readings Verification

Section is N/A, CTP is < 25% . . . . . (__) _____

9.3.1 IF 3 loop operation THEN N/A remainder of Section 9.3 and Section 9.4 and Perform N1-REP-12A OR N1-OP-43A (Attachment 8), "APRM GAIN ADJUSTMENT DURING 3 LOOP OPERATION" THEN continue with Section 10.0.

Step is N/A . . . . . (__) _____

9.3.2 [T/S] Record each "As Found" APRM reading.

11	_____	15	_____
12	_____	16	_____
13	_____	17	_____
14	_____	18	_____

_____

NOTE: Immediately notify the SSS if any APRM FCTR Card does not have Curve Set #0 selected OR if the INOP STATUS LED is not backlit GREEN (i.e. It displays RED or blinking RED). Refer to N1-OP-38C.

(C2) 9.3.3 Verify Curve Set #0 is displayed and INOP STATUS LED indicates GREEN for each APRM FCTR Card. Use a (✓) to indicate verification.

11	_____	12	_____	13	_____	14	_____
15	_____	16	_____	17	_____	18	_____

_____

9.3.4 [T/S] Determine required APRM readings as follows:
Mark "N/A" the step that does not apply.

a. IF: Full Power Adjusted Power Density Ratio (FPAPDR) ≤ 1.0
THEN: Required APRM settings equal Core Power (-0%, +2%)

Core Power _____%
Core Power +2% _____%

Step is N/A . . . . . (__) _____

b. IF: Full Power Adjusted Power Density Ratio (FPAPDR) > 1.0
THEN: Required APRM settings equal

CORE POWER X FPAPDR
(from Step 9.2.12)
_____% X____ = _____%

_____(+2%)

Step is N/A . . . . . (__) _____

_____
Ind. Verif.

This page deleted.

10.0 RETURN TO NORMAL

10.1 Notify SSS and CSO that procedure is complete.

_____ SSS

_____ CSO

11.0 ACCEPTANCE CRITERIA

11.1 Thermal Limits in Section 9.2 meet their acceptance criteria.

☐ Satisfactory ☐ Unsatisfactory

☐ Not Applicable (CTP <25%) _____

11.2 APRMs readings are left within the required setting determined in 9.3.4 or per N1-REP-12 or N1-REP-12a;

☐ Satisfactory ☐ Unsatisfactory

☐ Not Applicable (CTP <25%) _____

11.3 This step deleted

11.4 PFR Determination at < 25 CTP in Section 9.5 meets ITS Acceptance Criteria.

☐ Satisfactory ☐ Unsatisfactory

☐ Not Applicable (CTP ≥25%) _____

12.0 RECORD REVIEW AND DISPOSITION

☐ Satisfactory. (Record comments if any in Remarks.)

☐ Unsatisfactory. Immediately notify Station Shift Supervisor and Reactor Engineering Supervisor. (Record explanation and corrective actions in Remarks.)

Person Notified: _____

Remarks: _____

_____

_____

_____ _____
Shift Technical Advisor Date

_____ _____
Reactor Engineering Supervisor or Designee Date

ATTACHMENT 2

Initials

POWER FLOW RATIO DETERMINATION

1.0 Record Indicated Recirc Flows Below. (Meter readings may also be used if computer points are not available.)

Computer Pt.	Desc.	Value (Klb/Hr)	Requirement (Note 1)	
A430	Ch. 11, Loop 11	_____	<16,880	
A467	Ch. 12, Loop 11	_____	<16,880	
A434	Ch. 11, Loop 12	_____	<16,880	
B301	Ch. 12, Loop 12	_____	<16,880	
A438	Ch. 11, Loop 13	_____	<16,880	
B335	Ch. 12, Loop 13	_____	<16,880	
A442	Ch. 11, Loop 14	_____	<16,880	
B369	Ch. 12, Loop 14	_____	<16,880	
A446	Ch. 11, Loop 15	_____	<16,880	
B403	Ch. 12, Loop 15	_____	<16,880	
A445	Ch. 11, Total Flow	_____	<67,500	
A447	Ch. 12, Total Flow	_____	<67,500	_____

Note 1: Non-Operating loop flow should indicate approximately 200 Klb/Hr through the 2" bypass line.

2.0 Calculate Core Flow by summing the operating loop flows and using (-200 Klb/Hr) for idle loops with the 2" bypass open (or 0 Klb/Hr if loop has no backflow. Record the LOWEST flow from CHANNEL 11 or CHANNEL 12 for each operating loop.

_____ + _____ + _____ + _____ + _____ = _____Klb/Hr _____
Loop I1 Loop I2 Loop I3 Loop I4 Loop I5

_____Klb/Hr / 1000 = _____Mlb/Hr _____
Core Flow Ind. Verif.

3.0 Multiply the Core Flow of Step 2.0, by 100 and divide by 67.5 to obtain % recirc flow.

_____Mlb/hr * 100/67.5 = _____% _____

_____
Ind. Verif.

NMP-1 CYCLE 20
3DM/P11
PERIODIC LOG
AUTOMATIC
CALC RESULTS

SEQUENCE NO 7
20-MAY-2008 06:59 CALCULATED
20-MAY-2008 09:17 PRINTED
CASE ID FMLD1080520065939
RESTART FMLD1080520064724
LPRM SHAPE - FULL CORE

CORE PARAMETERS					
POWER	MWT	1848.3	Keff	1.0032	
POWER	MWE	628.4	XE WORTH %	-2.22	LOAD LINE SUMMARY
FLOW	MLB/HR	60.570	XE/RATED	1.01	CORE POWER 99.9%
PAPDR		0.924	AVE VF	0.394	CORE FLOW 89.7%
SUBC	BTU/LB	25.13	PFR	0.999	LOAD LINE 107.3%
PR	PSIa	1039.34			
CORE	MWD/sT	23618.2			
CYCLE	MWD/sT	7240.0			
MCPR		1.659			

CORRECTION FACTORS: MFLCPR= 1.000 MFLPD= 1.000 MAPRAT= 1.000
OPTION: PRE ARTS 4 LOOPS ON MANUAL FLOW MCPRLIM= 1.390

MOST LIMITING LOCATIONS (NON-SYMMETRIC)

MFLCPR	LOC	MFLPD	LOC	MAPRAT	LOC	PCRAT	LOC
0.838	25-18	0.923	23-34- 5	0.927	25-36- 5	1.004	9-24- 4
0.813	11-22	0.914	21-20- 5	0.904	23-34- 5	1.002	33-18- 5
0.809	23-20	0.905	25-36- 5	0.901	9-20- 5	1.001	43-20- 4
0.798	13-20	0.892	9-20- 5	0.896	23-36- 5	1.001	7-20- 4
0.794	21-20	0.877	11-22- 5	0.894	21-20- 5	1.001	9-22- 4
0.787	9-20	0.871	11-16- 5	0.879	11-22- 5	1.000	7-32- 5
0.783	23-14	0.867	13-20- 5	0.873	11-20- 5	1.000	11-32- 6
0.776	9-24	0.865	23-36- 5	0.869	23-38- 5	1.000	11-20- 6
0.775	25-22	0.862	25-32- 5	0.867	11-16- 5	1.000	27-18- 6
0.774	13-24	0.861	9-18- 5	0.864	11-18- 5	1.000	31-38- 6

SEQ. B-1 C=MFLCPR D=MFLPD M=MAPRAT P=PCRAT *=MULTIPLE

```
51
  L
47

43
  L
39                06                06
                          M
35
  L                       D
31                00                00

27
  L       P
23                00                00  46

19
  L                       C
15                06                06

11
  L
07

03
      L       L       L       L       L       L
   02  06  10  14  18  22  26  30  34  38  42  46  50
```

NOTCH	REL PW	LOC
00	0.133	24
02	0.238	23
04	0.481	22
06	0.621	21
08	0.722	20
10	0.815	19
12	0.876	18
14	0.902	17
16	1.035	16
18	1.107	15
20	1.148	14
22	1.212	13
24	1.275	12
26	1.305	11
28	1.316	10
30	1.347	09
32	1.364	08
34	1.356	07
36	1.406	06
38	1.423	05
40	1.366	04
42	1.237	03
44	0.978	02
46	0.338	01

CORE AVERAGE AXIAL

CORE AVERAGE RADIAL POWER DISTRIBUTION

RING #	1	2	3	4	5	6	7
REL PW	0.997	1.227	1.177	1.212	1.213	1.136	0.529

NMP-1 CYCLE 20 INSTRUMENT READINGS/STATUS
CALIBRATED LPRM READINGS

SEQUENCE NO 7
20-MAY-2008 06:59 CALCULATED
20-MAY-2008 09:17 PRINTED
CASE ID FMLD1080520065939
LPRM SHAPE - FULL CORE

49D			18.4	21.9	15.3	
C			31.8	34.1	23.9	
B			38.8	38.2	26.4	
A			35.1	31.0	22.1	
41D		18.6	25.2	28.4	22.6	15.3
C		38.4	44.9	48.8	39.2	26.7
B		51.4	57.3	59.2	51.0	33.0
A		51.1	56.0D	55.6M	47.7	28.1
33D	19.7	26.3	24.7	29.3	25.0	24.2
C	33.7	0.0	44.3	50.4	45.2	46.4
B	41.3	64.2	54.4	60.6	55.4	60.0
A	37.8	63.8	52.4	60.2	50.8	60.6
25D	20.9	26.9	24.9	28.6C	25.4	24.7
C	34.9	48.5	43.4	46.4	44.6	47.1
B	40.0	59.5	51.7	51.9	53.5	58.7
A	34.4	54.7P	49.1	46.8	47.9	54.5
17D	15.6	23.8	27.0	30.3	25.5	21.1
C	26.3	45.0	45.7	0.0	42.4	40.6
B	28.3	58.6	56.7	63.0	53.9	53.9
A	23.4	57.6	55.0	63.3	46.8	0.0
09D		15.6	23.9	27.3	21.3	
C		26.0	44.6	49.1	38.7	
B		31.7	56.9	59.8	50.4	
A		26.8	58.0	53.9	47.1	
	04	12	20	28	36	44

OF TIPS REJECTED: 1

FAILED SENSORS:
LPRM (3 SIGNALS FAILED)
1233C 2817C 4417A
LPRM (0 PANACEA REJECTED)
OTHER SENSORS (5 TOTAL)

FDWTR FLOW, #1, EAST
FDWTR FLOW, #1, WEST
RECIRC FLOW #5, (ALT)
RECIRC FLOW #5, (PRI)
RECIRC PUMP 5 POWER
SUB RODS
NONE

T = TIP RUN RECOMMENDED
C = MFLCPR LOCATION
M = MAPRAT LOCATION
D = MFLPD LOCATION
P = PCRAT LOCATION
* = MULTIPLE LIMIT

CORE SUMMARY

CORE POWER	99.9%	CALC SUB FLOW	90.3%	DP MEAS PSI	13.500
CORE FLOW	89.7%	OPER SUB FLOW	-1.5%	DP CALC PSI	16.040
LOAD LINE	107.3%	FLOW BASIS	MEAS	FEEDWTR FLOW MLB/HR	7.29

APRM CALIBRATION

	11	12	13	14	15	16	17	18
READING	99.6	100.6	99.0	100.0	98.9	99.6	100.0	98.8
AGAF	1.003	0.994	1.009	0.999	1.010	1.003	0.999	1.012
APRM - %CTP	-0.3	0.6	-0.9	0.1	-1.0	-0.3	0.1	-1.2

TIP RUNS RECOMMENDED
STRINGS: NONE

			NMP-1 CYCLE 20		SEQUENCE NO 5
CORE PARAMETERS			3DM/P11		19-MAY-2008 06:59 CALCULATED
POWER	MWT	1848.3	PERIODIC LOG		20-MAY-2008 09:26 PRINTED
POWER	MWE	624.8	AUTOMATIC		CASE ID FMLD1080519065943
FLOW	MLB/HR	60.442	CALC RESULTS		RESTART FMLD1080519061459
PAPDR		0.928			LPRM SHAPE - FULL CORE
SUBC	BTU/LB	25.18	Keff	1.0032	
PR	PSIa	1039.22	XE WORTH %	-2.22	LOAD LINE SUMMARY
CORE	MWD/sT	23599.7	XE/RATED	1.01	CORE POWER 99.9%
CYCLE	MWD/sT	7221.5	AVE VF	0.394	CORE FLOW 89.5%
MCPR		1.659	PFR	0.999	LOAD LINE 107.5%

CORRECTION FACTORS: MFLCPR= 1.000 MFLPD= 1.000 MAPRAT= 1.000
OPTION: PRE ARTS 4 LOOPS ON MANUAL FLOW MCPRLIM= 1.390

MOST LIMITING LOCATIONS (NON-SYMMETRIC)

MFLCPR	LOC	MFLPD	LOC	MAPRAT	LOC	PCRAT	LOC
0.838	25-18	0.927	23-34- 5	0.920	25-36- 5	1.021	41-32- 4
0.817	11-22	0.918	21-20- 5	0.907	23-34- 5	1.020	41-20- 4
0.814	23-20	0.899	25-36- 5	0.898	21-20- 5	1.017	27-32- 4
0.803	13-20	0.883	11-22- 5	0.892	23-36- 5	1.016	21-34- 5
0.800	21-20	0.873	13-20- 5	0.885	11-22- 5	1.015	11-38- 4
0.784	9-20	0.870	9-20- 5	0.881	11-20- 4	1.015	33-18- 5
0.783	9-24	0.869	21-38- 5	0.878	9-20- 5	1.014	9-38- 5
0.781	23-14	0.866	11-20- 5	0.863	23-38- 5	1.011	9-18- 4
0.779	25-22	0.863	25-32- 5	0.861	13-20- 5	1.010	21-38- 4
0.771	13-24	0.861	23-36- 5	0.856	11-16- 5	1.009	43-34- 4

SEQ. B-1 C=MFLCPR D=MFLPD M=MAPRAT P=PCRAT *=MULTIPLE

```
51
  L
47

43
  L
39                06                06
                        M
 35
  L                     D                   P
31                00                00
27
  L
23                00                00  46
19
  L                     C
15                06                06
11
  L
07
03
      L       L       L       L       L       L
   02  06  10  14  18  22  26  30  34  38  42  46  50
```

CORE AVE AXIAL

NOTCH	REL PW	LOC
00	0.133	24
02	0.239	23
04	0.482	22
06	0.623	21
08	0.724	20
10	0.819	19
12	0.882	18
14	0.906	17
16	1.038	16
18	1.109	15
20	1.150	14
22	1.215	13
24	1.276	12
26	1.305	11
28	1.314	10
30	1.343	09
32	1.355	08
34	1.345	07
36	1.392	06
38	1.415	05
40	1.368	04
42	1.245	03
44	0.984	02
46	0.339	01

CORE AVERAGE RADIAL POWER DISTRIBUTION

RING #	1	2	3	4	5	6	7
REL PW	0.996	1.228	1.180	1.211	1.212	1.135	0.530

NMP-1 CYCLE 20 INSTRUMENT READINGS/STATUS
CALIBRATED LPRM READINGS

SEQUENCE NO 5
19-MAY-2008 06:59 CALCULATED
20-MAY-2008 09:26 PRINTED
CASE ID FMLD1080519065943
LPRM SHAPE - FULL CORE

49D			18.8	22.2	16.5	
C			33.6	34.6	24.9	
B			41.1	38.8	27.4	
A			37.0	31.5	22.8	
41D		19.2	25.2	29.2	22.7	15.5
C		37.6	45.6	48.1	39.6	26.9
B		51.7	58.1	58.3	51.8	32.9
A		50.4	56.6D	56.3M	47.6	28.2
33D	19.5	25.7	25.6	28.6	25.0	23.6
C	33.7	0.0	45.9	49.0	43.5	45.2
B	41.1	62.6	55.2	59.6	53.7	57.4
A	38.2	65.0	54.7	61.2	49.4	58.2P
25D	20.5	27.0	25.4	29.6C	25.8	27.8
C	34.8	49.2	43.1	47.4	43.5	50.6
B	40.1	57.9	51.3	50.4	54.4	59.6
A	34.9	56.3	48.9	48.3	46.2	49.6
17D	15.2	24.2	27.3	30.4	25.4	21.2
C	26.3	44.7	44.0	0.0	42.3	40.0
B	28.2	57.8	55.8	63.1	53.4	54.1
A	23.3	58.9	55.9	65.2	46.3	0.0
09D		15.7	23.8	26.2	21.4	
C		26.1	44.5	46.0	38.1	
B		31.5	58.0	56.0	50.4	
A		26.9	57.7	52.6	46.4	
	04	12	20	28	36	44

FAILED SENSORS:
LPRM (3 SIGNALS FAILED)
1233C 2817C 4417A
LPRM (0 PANACEA REJECTED)
OTHER SENSORS (5 TOTAL)

FDWTR FLOW, #1, EAST
FDWTR FLOW, #1, WEST
RECIRC FLOW #5, (ALT)
RECIRC FLOW #5, (PRI)
RECIRC PUMP 5 POWER
SUB RODS
NONE

T = TIP RUN RECOMMENDED
C = MFLCPR LOCATION
M = MAPRAT LOCATION
D = MFLPD LOCATION
P = PCRAT LOCATION
* = MULTIPLE LIMIT

CORE SUMMARY

CORE POWER	99.9%	CALC SUB FLOW	90.2%	DP MEAS PSI	13.481
CORE FLOW	89.5%	OPER SUB FLOW	-1.5%	DP CALC PSI	15.992
LOAD LINE	107.5%	FLOW BASIS	MEAS	FEEDWTR FLOW MLB/HR	7.29

APRM CALIBRATION

	11	12	13	14	15	16	17	18
READING	100.2	101.2	99.2	99.3	99.1	100.3	100.2	98.5
AGAF	0.997	0.987	1.007	1.006	1.008	0.996	0.997	1.014
APRM - %CTP	0.3	1.3	-0.7	-0.6	-0.8	0.4	0.3	-1.4

TIP RUNS RECOMMENDED
STRINGS: NONE

NRC JPM RO EP
Constellation Energy Group
NINE MILE POINT UNIT 1
OPERATOR JOB PERFORMANCE MEASURE

Title: Perform Actions for a Medical Emergency with an Injured, Contaminated Person

Revision: NRC 2008

Task Number: N/A

Approvals:

_____ / 8/14/2008
General Supervisor Operations Training (Designee) — Date

N/A – Exam Security _____ / _____
General Supervisor Operations (Designee) — Date

N/A – Exam Security _____ / _____
Configuration Control — Date

Performer:_____(RO)

Trainer/Evaluator:_____

Evaluation Method: _X_ Perform _____Simulate

Evaluation Location: ___Plant ___X__Simulator

Expected Completion Time: 15 minutes Time Critical Task: No Alternate Path Task: No

Start Time: _____ Stop Time:_____ Completion Time:_____

JPM Overall Rating: Pass Fail

NOTE: A JPM overall rating of fail shall be given if any critical step is graded as fail. Any grade of unsat or individual competency area unsat requires a comment.

Comments:

Evaluators Signature:_____ Date:_____

Recommended Start Location: (Completion time based on the start location)

Simulator

Simulator Set-up (if required): N/A

Directions to the Instructor/Evaluator:

Prior to performance of this JPM, obtain SM / CSO general permission to open equipment cabinets and inspection covers. If opening the equipment cabinet or inspection cover will affect Tech. Spec. Operability, operational status, or the effects are unknown, obtain specific SM / CSO permission.

Directions to Operators:

Read Before Every JPM Performance:

For the performance of this JPM, I will function as the SM, CSO, and Auxiliary Operators. Prior to providing direction to perform this task, I will provide you with the initial conditions and answer any questions. During task performance, I will identify the steps to be simulated, or discuss and provide cues as necessary.

With the exception of accessing panels, NO plant equipment will be physically manipulated. Repositioning of devices will be simulated by discussion and acknowledged by my cues.

Read Before Each Evaluated JPM Performance:

This evaluated JPM is a measure of your ability to perform this task independently. The Control Room Supervisor has determined that a verifier is not available and that additional / concurrent verification will not be provided; therefore, it should not be requested.

Read Before Each Training JPM Performance:

During this Training JPM, applicable methods of verification are expected to be used. Therefore, either another individual or I will act as the independent/peer verifier.

Notes to Instructor / Evaluator:

1. Critical steps are identified in grading areas as **Pass/Fail**. All steps are sequenced critical unless denoted by a "•".
2. During Evaluated JPM:
   - Self verification shall be demonstrated.
3. During Training JPM:
   - Self verification shall be demonstrated.
   - No other verification shall be demonstrated.

References:
1. EPIP-EPP-04 and Attachment 1
2. NUREG 1123, 2.4.39 (3.9)

Tools and Equipment:

1. None

Task Standard: Complete the CSO actions for a medical emergency with an injured, contaminated person in the plant in accordance with EPIP-EPP-04.

Initial Conditions:

1. The Plant is operating at 100%.
2. You are the CSO.
3. You have just received a report that a Mechanic has passed out on Reactor Building elevation 261', near the RWCU pumps.
4. The Mechanic is bleeding from the left arm and respiration is shallow.
5. Ask the Operator for any questions.

Initiating Cues:

"(Operator's name), perform the required actions for the medical emergency as the CSO."

Performance Steps	Standard	Grade
1. Provide repeat back of initiating cue. *Evaluator Acknowledge repeat back providing correction if necessary*	Proper communications used for repeat back (GAP-OPS-O1)	Sat/Unsat
RECORD START TIME _____		
2. Obtain a copy of the reference procedure and review/utilize the correct section of the procedure.	Obtains a copy of EPIP-EPP-04. References Section 3.1 and Attachment 1.	Sat/Unsat
3. Place the GAItronics in the "Merge" Mode.	Places the GAItronics in the "MERGE" mode by placing the switch on the Communications Console in the Control Room to the "MERGE" position.	Sat/Unsat
4. Notify the Fire Brigade. **Cue:** **As the Fire Brigade Leader reply that, "The Fire Brigade is on the way to Reactor Building 261' and I will report on the situation as soon as I arrive on the scene."**	Sounds the Station Alarm and directs the FIRE BRIGADE to report to Reactor Building elevation 261' to evaluate the situation.	**Pass/Fail**
5. Notify the SM. **Cue:** **As the SM, acknowledge the Candidates report.** **Cue:** **As the Fire Brigade Leader, report, "The Mechanic is still unconscious and is potentially contaminated. Request Radiation Protection assistance. Also request an ambulance for transport to Oswego Hospital."**	Notifies the SM of the reported situation.	**Pass/Fail**

Performance Steps	Standard	Grade
6. Contact Radiation Protection. **Cue: As the RP Tech, acknowledge the request and state that an RP Tech is on the way.**	Contacts Radiation Protection AND requests that they report to the scene of the medical emergency.	**Pass/Fail**
7. Contact Oswego County 911 Center. **Cue: As the 911 Center Operator, acknowledge the request and that the person for transport is contaminated. State that an ambulance will be on the way shortly.**	Contacts OSWEGO COUNTY 911 CENTER and requests an ambulance be sent to the NINE MILE POINT CONSTELLATION ENERGY SECURITY CHECKPOINT, 350 LAKE ROAD. • Via land telephone line at 343-1313. • Informs the 911 Center that the person for transport is potentially contaminated.	**Pass/Fail**
8. Contact Security Shift Supervisor. **Cue: As the Security Shift Supervisor, acknowledge the request.**	Contacts the SECURITY SHIFT SUPERVISOR and requests a security force member be sent to the scene of the medical emergency AND informs them of the impending ambulance arrival.	**Pass/Fail**
9. Contact the Oswego Hospital. **Cue: As the Oswego Hospital Representative, acknowledge the report of the situation and state that the REA will be setup.** **Cue: As the Fire Brigade Leader, report that the RP Tech will need to accompany the ambulance to the hospital.**	Contacts the OSWEGO HOSPITAL. • Via land telephone line at 349-5522. • Informs them that ONE contaminated injured person will be transported to them. • Requests that setup the RADIATION EMERGENCY AREA (REA).	**Pass/Fail**
10. Arrange for the RP Tech to accompany the ambulance.	Requests permission from the SM for the RP Tech to accompany the ambulance.	Sat/Unsat
Cue: As the SM, give permission for the RP Tech to accompany the ambulance.	Informs RP Tech at the scene that they have SM permission to accompany the ambulance.	Sat/Unsat
Cue: As the RP Tech, acknowledge permission to accompany the ambulance.	Informs the RP Supervisor of the incident and directs them to the hospital	Sat/Unsat
Cue: As the RP Supervisor, acknowledge report and state that you will meet the ambulance at the hospital. **Cue: As the SM, state that you will evaluate staffing levels.**	Informs the SM that an evaluation of required staffing should be performed	Sat/Unsat

Performance Steps	Standard	Grade
11. Request SM contact Plant General Manager. **Cue: As the SM, acknowledge the request.**	Requests SM contact Plant General Manager and provide details within one hour of incident.	Sat/Unsat
12. Request Security Shift Supervisor to contact Supervisor, Communications **Cue: As the Security Shift Supervisor acknowledge the request.** **Cue: As the Fire Brigade Leader, inform the Candidate that the contaminated injured person has left the site and is proceeding to Oswego Hospital in the ambulance.**	Requests Security Shift Supervisor to contact Supervisor, Communications and provide details of the incident	Sat/Unsat
13. Inform the SM of the termination of the emergency. **Cue: As the SM, acknowledge the Candidates report.**	Informs the SM that the emergency is terminated.	Sat/Unsat
14. Announce termination of medical emergency.	Sounds the Station Alarm and announces that the medical emergency has been terminated.	Sat/Unsat

Terminating Cue: The medical emergency has been terminated.

RECORD STOP TIME _____

Initial Conditions:

1. The Plant is operating at 100%.
2. You are the CSO.
3. You have just received a report that a Mechanic has passed out on Reactor Building elevation 261', near the RWCU pumps.
4. The Mechanic is bleeding from the left arm and respiration is shallow.

Initiating Cues:

"(Operator's name), perform the required actions for the medical emergency as the CSO."

ATTACHMENT 1: CSO MEDICAL EMERGENCY CHECKLIST

NAME:	DATE:	UNIT: ☐ 1 ☐ 2

TIME OF NOTIFICATION _____ LOCATION OF MEDICAL EMERGENCY _____ Completed N/A

NOTE: If making emergency announcements via GAItronics, always place in Merge mode.

1. Notify the Fire Brigade by Gai-Tronics ..... ☐ ☐

   Sound the Station Alarm ..... ☐ ☐

   "Attention, attention all personnel, This is (a Drill / an actual event), the Fire Brigade is directed to report to _____ in response to a medical emergency. I repeat this is (a drill / an actual event) ..... ☐ ☐

   Repeat the station alarm and the announcement ..... ☐ ☐
   Leave in Merge Mode until event termination.

2. Notify the SM ..... ☐ ☐

3. Take ANY of the following actions, IF requested by the Fire Brigade Leader:

   A. IF Radiation Protection assistance is required, THEN contact RP and request that they report to the scene of the medical emergency ..... ☐ ☐

   B. IF an ambulance and/or rescue is required (refer to attachment 4), THEN:

      1. Contact Oswego County 911 Center at 343-1313 and request an ambulance and/or rescue vehicle be sent to the Nine Mile Point Constellation Energy Security Checkpoint, 350 Lake Road ..... ☐ ☐

         NOTE: IF patient is contaminated OR potentially contaminated, THEN inform 911 Center of this.

      2. Contact Security Shift Supervisor (2404 or 2591) and request a security force member to respond to the event location

         AND inform them of the impending ambulance arrival. ..... ☐ ☐

      3. WHEN the Fire Brigade Leader has requested setup of the Hospital Radiation Emergency Area (REA),
         OR WHEN the patient is contaminated or potentially contaminated,
         THEN:

         a. Contact Oswego Hospital at 349-5522 ..... ☐ ☐

         b. Inform them of the number of patients ..... ☐ ☐

         c. Request setup of the REA ..... ☐ ☐

NOTE: If hospital requests patient status OR extent of injuries AND this information is known, it may be given to the hospital.

C. **IF** transportation by NMP vehicle is requested, **THEN** request that the SM notify the injured persons supervisor to obtain the necessary vehicle and driver ..... ☐ ☐

D. If it is necessary for the RP Technician to accompany the ambulance, THEN
1. Request permission from the SM for the RP Technician to accompany the ambulance ..... ☐ ☐
2. Transmit that permission to the RP Technician at the incident scene ..... ☐ ☐
3. Contact the RP Supervisor, inform him of the incident and direct them to the hospital ..... ☐ ☐
4. Inform the SM that an evaluation of required staffing should be performed and, if necessary, action taken to restore staffing levels ..... ☐ ☐

E. **IF** the incident requires transportation by ambulance
THEN request Shift Manager contact Plant General Manager and provide details within 1 hour of incident ..... ☐ ☐

F **IF** the incident involves a contaminated injury/illness AND requires transportation,
THEN: Direct Security Shift Supervisor to contact Supervisor, Communications and provide details of the incident ..... ☐ ☐

G **WHEN** the patient has left the site OR when the Fire Brigade Leader indicates the emergency is terminated,
THEN inform the SM that the emergency is terminated ..... ☐ ☐

H. **WHEN** notified that the emergency is terminated,
IF an announcement was made indicating a medical emergency was in progress
THEN sound station alarm and announce medical emergency has been terminated ..... ☐ ☐

NRC JPM SRO COO1
Constellation Energy Group
NINE MILE POINT UNIT 1
OPERATOR JOB PERFORMANCE MEASURE

Title: Perform Time to Boil Calculation for Reactor Coolant System Revision: NRC 2008

Task Number: N/A

Approvals:

/ 8/14/2008
General Supervisor Date
Operations Training (Designee)

N/A – Exam Security /
General Supervisor Date
Operations (Designee)

N/A – Exam Security /
Configuration Control Date

Performer:_____(SRO)

Trainer/Evaluator:_____

Evaluation Method: Perform

Evaluation Location: Classroom

Expected Completion Time: 25 minutes Time Critical Task: No Alternate Path Task: No

Start Time: _____ Stop Time:_____ Completion Time:_____

JPM Overall Rating: Pass Fail

NOTE: A JPM overall rating of fail shall be given if any critical step is graded as fail. Any grade of unsat or individual competency area unsat requires a comment.

Comments:

Evaluators Signature:_____ Date:_____

Recommended Start Location: (Completion time based on the start location)

Classroom

Simulator Set-up:

None

Directions to the Instructor/Evaluator:

None

Directions to Operators:

Read Before Every JPM Performance:

For the performance of this JPM, I will function as the SM, CSO, and Auxiliary Operators. Prior to providing direction to perform this task, I will provide you with the initial conditions and answer any questions. During task performance, I will identify the steps to be simulated, or discuss and provide cues as necessary.

Read Before Each Evaluated JPM Performance:

This evaluated JPM is a measure of your ability to perform this task independently. The Control Room Supervisor has determined that a verifier is not available and that additional / concurrent verification will not be provided; therefore it should not be requested.

Read Before Each Training JPM Performance:

During this Training JPM, applicable methods of verification are expected to be used. Therefore, either another individual or I will act as the additional / concurrent verifier.

Notes to Instructor / Evaluator:

1. Critical steps are identified in grading areas as **Pass/Fail**.
2. During Evaluated JPM:
   - Self verification shall be demonstrated.
3. During Training JPM:
   - Self verification shall be demonstrated.
   - No other verification shall be demonstrated.

References:

1. N1-ODP-OPS-0108

Tools and Equipment:

1. Calculator

Task Standard: Perform a Time to Boil calculation for the Reactor Coolant System in accordance with N1-ODP-OPS-0108.

Initial Conditions:

1. The plant has been shutdown for 24 hours.
2. A loss of Shutdown Cooling has occurred.
3. Reactor Coolant Temperature = 150°F.
4. Reactor Water Level = 72 inches.
5. RBCLC Temperature on TI-70-23C = 80°F.
6. One (1) Spent Fuel Pool Cooling Loop is in Service.
7. Reactor Engineering reports the following information for burned bundles in the core:
   # Bundles 1X = 160
   # Bundles 2X = 164
   # Bundles 3X = 148
   # Bundles 4X = 60
8. Instructor to ask for any questions.

Initiating Cues:

"(Operator's name), perform a Time to Boil calculation for the Reactor Coolant System in accordance with N1-ODP-OPS-0108."

EXAMINER NOTE: Provide applicant a blank copy of N1-ODP-OPS-0108 Attachments 1 & 2 and Table 1.

EXAMINER NOTE: Refer to KEY for specifics of calculations.

Performance Steps	Standard	Grade
1. Provide repeat back of initiating cue. *Evaluator Acknowledge repeat back providing correction if necessary.*	Proper communications used for repeat back (GAP-OPS-O1/Operations Manual)	Sat/Unsat
RECORD START TIME _____		
2. Obtain a copy of the reference procedure and review/utilize the correct section of the procedure.	N1-ODP-OPS-0108 obtained.	Sat/Unsat
3. Calculates DHPcore (Line 103 of Att. 2)	DHPcore = 38.1192 MBTU/HR **Note:** To account for differences in rounding, the acceptable range for this value is 38-38.2 MBTU/HR.	Sat/Unsat
4. Calculates DHP (Line 9 of Att.1)	DHP = 38.1192 MBTU/HR **Note:** To account for differences in rounding, the acceptable range for this value is 38-38.2 MBTU/HR.	**Pass/Fail**

Performance Steps	Standard	Grade
5. Calculates DHRsdc (Line 58 of Att.1)	DHR sdc = 0 MBTU/HR	Sat/Unsat
6. Calculates DHR (Line 64 of Att.1)	DHR = 0 MBTU/HR	**Pass/Fail**
7. Selects Thermal Capacity (K) for specific condition applicable (Line 74 of Att.1)	K = 0.557 MBTU/F	**Pass/Fail**
8. Calculates Time to Boil = [212°F – SFP/Cavity Temp] / (DHP – DHR) / K (Line 82 of Att.1)	Time to Boil = (212 – 150) / (38.1192-0)/ 0.557 =0.906 hours (or 54.36 minutes) **Note:** To account for differences in rounding, the acceptable range for this value is 0.900-0.910 hours (or 54.0-54.6 minutes)	**Pass/Fail**
9. Reports results	Proper communications used (GAP-OPS-O1/Operations Manual)	Sat/Unsat

Terminating Cue: Time to Boil Calculation is complete.

RECORD STOP TIME _____

Initial Conditions:

1. The plant has been shutdown for 24 hours.
2. A loss of Shutdown Cooling has occurred.
3. Reactor Coolant Temperature = 150°F.
4. Reactor Water Level = 72 inches.
5. RBCLC Temperature on TI-70-23C = 80°F.
6. One (1) Spent Fuel Pool Cooling Loop is in Service.
7. Reactor Engineering reports the following information for burned bundles in the core:
   # Bundles 1X = 160
   # Bundles 2X = 164
   # Bundles 3X = 148
   # Bundles 4X = 60

Initiating Cues:

"(Operator's name), perform a Time to Boil calculation for the Reactor Coolant System in accordance with N1-ODP-OPS-0108."

NINE MILE POINT NUCLEAR STATION UNIT 1

OPERATIONS ADMINISTRATIVE PROCEDURE

N1-ODP-OPS-0108

REVISION 14

SHUTDOWN OPERATIONS PROTECTION

TECHNICAL SPECIFICATION REQUIRED

CONTROLLED

Approved by:
N. F. Conicella

D. Richards for Manager Operations

3/15/2007
Date

Effective Date: 3/19/2007

TABLE OF CONTENTS

SECTION		PAGE
1.0	PURPOSE	1
2.0	PRIMARY RESPONSIBILITIES	1
3.0	PROCEDURE	1
	3.1 Reductions in Decay Heat Removal – Time to Heat Up Calculation	1
	3.2 Loss of Decay Heat Removal	2
4.0	DEFINITIONS	2
5.0	REFERENCES AND COMMITMENTS	3
6.0	RECORDS REVIEW AND DISPOSITION	3
ATTACHMENT 1:	TIME TO BOIL/TIME TO HEATUP CALCULATION FOR SFP AND/OR REACTOR CAVITY	4
ATTACHMENT 2:	CALCULATION OF DECAY HEAT PRODUCTION (CORE AND/OR SFP)	6
TABLE 1:	DECAY HEAT PER BUNDLE AFTER SHUTDOWN	7
TABLE 2:	SFP DECAY HEAT FROM RFO19 TO RFO20	8

1.0 PURPOSE

To provide the necessary direction for the Nine Mile Unit 1 Operations Department to calculate "Time To Boil" and Time To Heat-Up to a given temperature to support Maintenance and unplanned events with decay heat removal systems.

1.1 Applicability

This guideline applies to all outages, both planned and forced, and to all conditions for Spent Fuel Pool Cooling.

2.0 PRIMARY RESPONSIBILITIES

The Operations Branch has overall responsibility for maintaining the station in a safe condition within the license requirements and the following specific responsibilities:

2.1 The Manager Operations has the following responsibilities:

- Ensuring that any planned maintenance on a Decay Heat Removal System is supported by a calculation and/or contingency plan.

2.2 The Shift Manager has the following responsibilities:

- Operating the plant within the Licensing Bases.
- Maximizing the level of shutdown safety by carefully assessing work against time available before decay heat warms the water above allowable procedural limits.
- Ensuring the required Operations Department contingency plans are in place.

3.0 PROCEDURE

3.1 Reductions in Decay Heat Removal – Time to Heat Up Calculation

1. Determine the appropriate temperature limit using the following table:

   Spent Fuel Pool - - - - - - - - 140F (design limit)
   Spent Fuel Pool - - - - - - - - 125F (operating limit)
   Cavity Flooded- - - - - - - - - 140F (design limit)
   Cavity Flooded- - - - - - - - - 125F (operating limit)
   Reactor Vessel - - - - - - - - - 212F (tech spec limit for Cold Shutdown or Refueling)

   Note: If fuel moves are in progress, contact Reactor Engineering to determine exact status of fuel bundle location (i.e. how many Once Burnt bundles are in the SFP, etc).

3.1 (Cont)

2. Calculate Decay Heat Production of Reactor and / or SFP using Attachment 2.

3. Calculate Decay Heat Removal of SDC and / or SFP Cooling using Attachment 1.

4. Select the Thermal Capacity for the appropriate configuration.

5. Calculate the time to the limit per Attachment 1.

6. If calculation assumptions change, then a revised calculation shall be performed.

7. Planned Maintenance should not exceed 50% of the available time to the calculated temperature limit. If the planned maintenance exceeds 50% of the available time to temperature, then an Approved Contingency Plan shall be in effect to restore cooling prior to exceeding the specified limit.

8. Engineering shall be contacted via an Engineering Service Request (ESR) if a refined calculation is desired.

3.2 Loss of Decay Heat Removal

3.2.1 N1-SOP-6.1, "Loss of SFP/RX Cavity Level/Decay Heat Removal" provides guidance to plant Operations on recovery from loss of Decay Heat Removal during shutdown conditions.

3.2.2 A Time-to-Boil / Time-to-Heat Up estimation should be performed using Attachment 1 if any of the following conditions exist:

a. The Safety Assessment Level for decay heat removal is <N

OR

b. The temperature of the fuel pool or reactor unexpectedly increases >10ºF in any 24-hour period

OR

c. The temperature of the fuel pool or reactor is projected to exceed 125ºF (based upon actual temperature measurements).

4.0 DEFINITIONS

4.1 **Decay Heat Removal Capability** – The ability to maintain the reactor coolant system temperature and pressure and spent fuel pool temperature below specified limits following a shutdown.

4.2 **DARS** – Days after reactor shutdown

5.0 REFERENCES AND COMMITMENTS

5.1 NIP-OUT-01 Shutdown Safety.

5.2 UFSAR Chapter X Section H "SPENT FUEL STORAGE POOL FILTERING AND COOLING SYSTEM.

5.3 N1-OP-6, Spent Fuel Pool Cooling System

5.4 S22.1-XX-G065NF, Rev. 0, NMP1 Cycle 17 and RF019 Decay Heat

5.5 DCP N1-06-016, NMP1 Reload 19/Cycle 18 Core Design

6.0 RECORDS REVIEW AND DISPOSITION

6.1 The following records generated by this procedure shall be maintained by Records Management for the Permanent Plant File in accordance with NIP-RMG-01, Records Management:

- None

6.2 The following records generated by this procedure are not required for retention in the Permanent Plant file:

- Time to boil calculations

LAST PAGE

ATTACHMENT 1:
TIME TO BOIL/TIME TO HEATUP CALCULATION FOR SFP AND/OR REACTOR CAVITY

Date/Time_____

General Equation

$$\text{Time To Target Temp} = \frac{[\text{Target Temp, F} - \text{Current Temp, F}]}{[\text{DHP} - \text{DHR}] / K}$$

K = Heat Capacity of SFP and/or Cavity
DHP = Decay Heat Production
DHR = Decay Heat Removal

Line					
1	Target Temp	=	Final SFP/Cavity Temp	Record Desired (Target) SFP/Cavity Temp	_____ F
2	SFP/Cavity Temp	=	Initial SFP/Cavity Temp	Record Actual Initial SFP/Cavity Temp	_____ F
3	DHP	=	Decay Heat Production from all Fuel		
4	DHP	=	DHP core + DHP sfp		
	Note: use DHP values appropriate to situation and location of fuel.				
5	DHP core	=	Decay Heat Production from Core	(From Attachment 2, line 103)	_____ MBTU/HR
6	DHP sfp	=	Decay Heat Production from SFP	(From Attachment 2, line 116)	_____ MBTU/HR
7	DHP	=	DHP core + DHP sfp	Note: If gates are in, calculate for only one location.	
8	DHP	=	(line 5) + (line 6)		
9	DHP	=	_____ + _____	DHP =	_____ MBTU/HR
10				Calc. By _____	
11				Verified By _____	
12					
13	DHR	=	Decay Heat Removal of SFPC and SDC	Enter zero(s) for complete loss of cooling.	
14	DHR	=	DHR sfp + DHR sdc		
15	DHR sfp	=	Decay Heat Removal of SFP cooling	= N loops sfp X 0.226 X SFP Delta T	
16	SFP Delta T	=	SFP Temp (current) - RBCLC Temp		
17	SFP Temp	=	From Line # 2		_____ F
18	RBCLC Temp	=	From Panel Indicator TI-70-23C		_____ F
19	SFP Delta T	=	SFP Temp - RBCLC Temp		
20	SFP Delta T	=	(line 17) - (line 18)		
21	SFP Delta T	=	_____ F - _____ F	SFP Delta T =	_____ F
22				Calc. By _____	
23				Verified By _____	
24	N loops sfp		Enter Number of SFP Cooling Loops in Service	(0,1 or 2)	_____ Loops
25					
26					
27	DHR sfp	=	N loops sfp X 0.226 X SFP Delta T		
28	DHR sfp	=	(line 24) X 0.226 X (line 21)		
29	DHR sfp	=	_____ X 0.226 X _____	DHR sfp =	_____ MBTU/HR
30				Calc. By _____	
31				Verified By _____	
32					

ATTACHMENT 1 (Cont)

33 DHR sdc = Decay Heat Removal of Shutdown cooling — Not to be used for SFP
34 SDC Delta T = Rx Temp - RBCLC Temp
35 Rx Temp = SDC inlet Temp from Panel Indicator TR 38-146 (preferred) _____ F
36 or RWCU inlet Temp from CPT G-358 (if in service) — or RRP 13 Suction Temp from CPT A-435 (if in service)
37 or RRP 11 Suction Temp from CPT A-427 (if in service) — or RRP 14 Suction Temp from CPT A-439 (if in service)
38 or RRP 12 Suction Temp from CPT A-431 (if in service) — or RRP 15 Suction Temp from CPT A-443 (if in service)

42 RBCLC Temp = From Panel Indicator TI-70-23C _____ F
43 SDC Delta T = Rx Temp - RBCLC Temp
44 SDC Delta T = (line 35) - (line 42)
45 SDC Delta T = _____ F - _____ F — SDC Delta T = _____ F
46 Calc. By _____
47 Verified By _____

48 N loops sdc — Enter Number of SDC Loops in Service (0,1, 2 or 3) _____ Loops
49 SDC constant — Select SDC Capability constant

50 N loops sdc	SDC constant
51 0	0
52 1	0.1954
53 2	0.3909
54 3	0.5364

SDC constant = _____

55
56 DHR sdc = SDC constant X SDC Delta T
57 DHR sdc = (line 53) X (line45)
58 DHR sdc = _____ X _____ — DHR sdc = _____ MBTU/Hr
59 Calc. By _____
60 Verified By _____
61

62 DHR = DHR sfp + DHR sdc (Use appropriate system if gates are installed)
63 DHR = (line 29) + (line 58)
64 DHR = _____ + _____ — DHR = _____ MBTU/HR
65 Calc. By _____
66 Verified By _____
67

68 Thermal Capacity of SFP and / or Cavity
69 SFP ONLY gates installed — K = 2.250 MBTU / F
70 SFP and Cavity gates removed — K = 6.060 MBTU / F
71 Cavity only (gates installed) Level at 339' — K = 2.620 MBTU / F
72 Vessel only (gates installed) Level at Vessel Flange — K = 0.681 MBTU / F
73 Vessel only (gates installed) Level at 72" — K = 0.557 MBTU / F
74 Select Thermal Capacity for specific condition applicable. — K = _____ MBTU / F
75

76 Time To Boil (Time to 140F) = [212 (140) F - SFP/Cavity Temp]
77 [DHP - DHR] / K
78
79 = [212 (or 140) F - (line2) F] = [F - F]
80 [(line 9) - (line 64)] / (line 74) — [_____ - _____] / _____
81
82 = _____ Hours — Calc. By _____
83 Verified By _____

ATTACHMENT 2: CALCULATION OF DECAY HEAT PRODUCTION (CORE AND/OR SFP)

93 **DHP core Calculation**

Obtain from Rx Eng (preferred) or Estimate the number of Once, Twice , 3X,and 4X burned bundles in the core at this time (if estimate is used for number of bundles , then repeat calculation once an accurate count is obtained)

94 (Will not add up to 532 if any bundles have been offloaded

# Bundles 1X	# Bundles 2X	# Bundles 3X	# Bundles 4X

95 From Table 1 Record Decay Heat Per Bundle for each type (1X, 2X, 3X & 4X) (MBTU/Hr) based on DARS

96

1X (MBTU/Hr)	2X (MBTU/Hr)	3X (MBTU/Hr)	4X(MBTU/Hr)

97 Multiply the # Bundles of each type times Decay Heat per bundle for that type

98 _____ X _____ = _____
line 94 (1X) Line 96 (1X) 1X Bundle Power

99 _____ X _____ = _____
line 94 (2X) Line 96 (2X) 2X Bundle Power

100 _____ X _____ = _____
line 94 (3X) Line 96 (3X) 3X Bundle Power

101 _____ X _____ = _____
line 94 (4X) line 96 (4x) 4Xbundle power

102 DHP core = _____ + _____ + _____ + _____
1X (line 98) 2X (line 99) 3X (line 100) 4X (line 101)

103 DHP core = _____ MBTU/Hr Calc. By _____ Verified By _____

104 **DHPsfp Calculation**

Note: The SFP Decay Heat Production is the sum of the freshly offloaded fuel plus the "old" fuel.
Obtain from Rx Eng or Estimate The number of Once, Twice , 3X and 4X burned bundles from current core that have been offloaded into the SFP. (if estimate is used for number of bundles , then repeat calculation once accurate count is obtained)
If Core Shuffle is complete, Simply look up DHPsfp from Table 2 and enter in Line 116 below.

105 In SFP (There will be 148 3X burned after RFO 16 Shuffle complete)

# Bundles 1X	# Bundles 2X	# Bundles 3X	# Bundles 4X

106 From Table 1 Record Decay Heat Per Bundle for each type (1X, 2X, 3X & 4X) (MBTU/Hr) based on DARS

107

1X (MBTU/Hr)	2X (MBTU/Hr)	3X (MBTU/Hr)	4X(MBTU/Hr)

108 Multiply the # Bundles of each type times Decay Heat per bundle for that type

109 _____ X _____ = _____
line 105 (1X) Line 107 (1X) 1X Bundle Power (of freshly offloaded bundles in the SFP)

110 _____ X _____ = _____
line 105 (2X) Line 107 (2X) 2X Bundle Power (of freshly offloaded bundles in the SFP)

111 _____ X _____ = _____
line 105 (3X) Line 107 (3X) 3X Bundle Power (of freshly offloaded bundles in the SFP)

112 _____ X _____ = _____
line 105 (4X) line 107 (4X) 4X Bundle power (of freshley offloaded bundles in the SFP)

113 DHPfresh = _____ + _____ + _____ + _____
1X (line 109) 2X (line 110) 3X (line 111) 4X (line112)

114 DHPfresh = _____ MBTU/Hr

115 Decay Heat for previously offloaded "old" fuel (assumed constant) = 1.41

116 DHPsfp = _____ + 1.41 = _____ MBTU/Hr
(line 114) (line 115) DHPsfp (directly from table 2 if shuffle complete).

Calc. By_____Verified By_____

TABLE 1: DECAY HEAT PER BUNDLE AFTER SHUTDOWN

DARs	MBTU/hr on a Per Bundle Basis				Totals MBTU/hr	DARs	MBTU/hr on a Per Bundle Basis				Totals MBTU/hr
	P1x	P2x	P3x	P4x	Pin-core		P1x	P2x	P3x	P4x	Pin-core
0.00	16.7251	12.7052	9.1625	3.3066	6314.12	13.00	0.0380	0.0303	0.0223	0.0084	14.85
0.25	0.1568	0.1205	0.0874	0.0319	59.70	13.50	0.0374	0.0299	0.0220	0.0083	14.64
0.50	0.1234	0.0952	0.0691	0.0253	47.10	14.00	0.0369	0.0294	0.0217	0.0082	14.43
0.75	0.1082	0.0836	0.0607	0.0223	41.35	14.50	0.0364	0.0291	0.0214	0.0081	14.24
1.00	0.0996	0.0771	0.0561	0.0206	38.13	15.00	0.0359	0.0287	0.0211	0.0080	14.06
1.25	0.0938	0.0727	0.0529	0.0195	35.91	15.50	0.0354	0.0283	0.0209	0.0079	13.88
1.50	0.0891	0.0691	0.0503	0.0185	34.15	16.00	0.0350	0.0280	0.0206	0.0078	13.71
1.75	0.0851	0.0661	0.0481	0.0178	32.63	16.50	0.0345	0.0276	0.0204	0.0077	13.54
2.00	0.0815	0.0634	0.0461	0.0170	31.28	17.00	0.0341	0.0273	0.0201	0.0077	13.38
2.25	0.0783	0.0609	0.0444	0.0164	30.06	17.50	0.0337	0.0270	0.0199	0.0076	13.22
2.50	0.0753	0.0587	0.0427	0.0158	28.94	18.00	0.0333	0.0267	0.0197	0.0075	13.07
2.75	0.0726	0.0566	0.0413	0.0153	27.92	18.50	0.0329	0.0264	0.0195	0.0074	12.93
3.00	0.0701	0.0547	0.0399	0.0148	26.99	19.00	0.0325	0.0261	0.0193	0.0074	12.78
3.25	0.0679	0.0530	0.0387	0.0143	26.13	20.00	0.0318	0.0256	0.0189	0.0072	12.51
3.50	0.0658	0.0514	0.0375	0.0139	25.35	21.00	0.0311	0.0250	0.0185	0.0071	12.24
3.75	0.0639	0.0500	0.0365	0.0136	24.62	22.00	0.0305	0.0245	0.0181	0.0069	11.99
4.00	0.0621	0.0486	0.0355	0.0132	23.96	23.00	0.0298	0.0240	0.0178	0.0068	11.75
4.25	0.0605	0.0474	0.0346	0.0129	23.34	24.00	0.0292	0.0236	0.0174	0.0067	11.53
4.50	0.0590	0.0462	0.0338	0.0126	22.77	25.00	0.0286	0.0231	0.0171	0.0066	11.31
4.75	0.0576	0.0452	0.0330	0.0123	22.24	26.00	0.0281	0.0227	0.0168	0.0065	11.10
5.00	0.0563	0.0442	0.0323	0.0121	21.75	27.00	0.0276	0.0223	0.0165	0.0064	10.90
5.25	0.0551	0.0433	0.0316	0.0118	21.30	28.00	0.0270	0.0219	0.0162	0.0063	10.70
5.50	0.0539	0.0424	0.0310	0.0116	20.88	29.00	0.0266	0.0215	0.0160	0.0062	10.52
5.75	0.0529	0.0416	0.0305	0.0114	20.48	30.00	0.0261	0.0212	0.0157	0.0061	10.34
6.00	0.0519	0.0409	0.0299	0.0112	20.11	31.00	0.0256	0.0208	0.0155	0.0060	10.17
6.25	0.0510	0.0402	0.0294	0.0110	19.77	32.00	0.0252	0.0205	0.0152	0.0059	10.00
6.50	0.0502	0.0395	0.0289	0.0108	19.44	33.00	0.0248	0.0202	0.0150	0.0058	9.84
6.75	0.0494	0.0389	0.0285	0.0107	19.14	34.00	0.0244	0.0199	0.0148	0.0057	9.69
7.00	0.0486	0.0384	0.0281	0.0105	18.86	35.00	0.0240	0.0196	0.0145	0.0056	9.54
7.25	0.0479	0.0378	0.0277	0.0104	18.59	36.00	0.0236	0.0193	0.0143	0.0056	9.40
7.50	0.0472	0.0373	0.0273	0.0103	18.33	37.00	0.0232	0.0190	0.0141	0.0055	9.26
7.75	0.0466	0.0368	0.0270	0.0101	18.09	38.00	0.0229	0.0187	0.0139	0.0054	9.13
8.00	0.0460	0.0364	0.0267	0.0100	17.86	39.00	0.0226	0.0185	0.0138	0.0054	9.00
8.25	0.0454	0.0359	0.0263	0.0099	17.65	40.00	0.0222	0.0182	0.0136	0.0053	8.88
8.50	0.0449	0.0355	0.0260	0.0098	17.44	41.00	0.0219	0.0180	0.0134	0.0052	8.76
8.75	0.0443	0.0351	0.0258	0.0097	17.24	42.00	0.0216	0.0178	0.0132	0.0052	8.64
9.00	0.0438	0.0347	0.0255	0.0096	17.06	43.00	0.0213	0.0175	0.0131	0.0051	8.53
9.25	0.0434	0.0344	0.0252	0.0095	16.88	44.00	0.0210	0.0173	0.0129	0.0051	8.42
9.50	0.0429	0.0340	0.0250	0.0094	16.71	45.00	0.0208	0.0171	0.0128	0.0050	8.32
9.75	0.0425	0.0337	0.0247	0.0093	16.54	46.00	0.0205	0.0169	0.0126	0.0049	8.22
10.00	0.0421	0.0334	0.0245	0.0092	16.38	47.00	0.0203	0.0167	0.0125	0.0049	8.12
10.50	0.0413	0.0328	0.0241	0.0091	16.08	48.00	0.0200	0.0165	0.0123	0.0048	8.03
11.00	0.0405	0.0322	0.0237	0.0089	15.80	49.00	0.0198	0.0163	0.0122	0.0048	7.93
11.50	0.0398	0.0317	0.0233	0.0088	15.54	50.00	0.0195	0.0162	0.0121	0.0048	7.85
12.00	0.0392	0.0312	0.0229	0.0087	15.30	55.00	0.0185	0.0153	0.0115	0.0045	7.44
12.50	0.0386	0.0307	0.0226	0.0085	15.07	60.00	0.0175	0.0146	0.0110	0.0044	7.09

TABLE 2: SFP DECAY HEAT FROM RFO19 TO RFO20

(Assumes 172 discharged bundles in RFO19)
Shutdown date 3/18/07

DARS	Decay Heat for 172 Bundles Discharged during RFO19 MBTU/hr	Decay Heat for 2848 Old fuel bundles in SFP MBTU/hr	Total Decay Heat for SFP MBTU/hr
7	3.90	1.54	5.44
14	3.01	1.54	4.55
21	2.57	1.54	4.11
28	2.26	1.54	3.80
42	1.85	1.54	3.39
56	1.59	1.54	3.13
86	1.27	1.54	2.81
116	0.93	1.54	2.47
146	0.81	1.54	2.35
176	0.71	1.54	2.25
206	0.63	1.54	2.17
236	0.57	1.54	2.11
266	0.51	1.54	2.05
296	0.47	1.54	2.01
326	0.43	1.54	1.97
356	0.40	1.54	1.94
386	0.37	1.54	1.91
416	0.35	1.54	1.89
446	0.33	1.54	1.87
476	0.31	1.54	1.85
506	0.30	1.54	1.84
536	0.28	1.54	1.82
566	0.27	1.54	1.81
596	0.26	1.54	1.80
626	0.25	1.54	1.79
656	0.24	1.54	1.78
686	0.23	1.54	1.77
716	0.22	1.54	1.76
746	0.22	1.54	1.76
776	0.21	1.54	1.75
806	0.20	1.54	1.74
836	0.20	1.54	1.74
866	0.19	1.54	1.73
896	0.19	1.54	1.73
926	0.18	1.54	1.72

NRC JPM RO/SRO COO2
Constellation Energy Group
NINE MILE POINT UNIT 1
OPERATOR JOB PERFORMANCE MEASURE

Title: Determine Personnel Overtime Availability IAW GAP-FFD-02 Revision: NRC 2008

Task Number: N/A

Approvals:

8/14/2008

General Supervisor / Date
Operations Training (Designee)

N/A – Exam Security / _____
General Supervisor Date
Operations (Designee)

N/A – Exam Security / _____
Configuration Control Date

Performer:_____(RO/SRO)

Trainer/Evaluator:_____

Evaluation Method: Perform

Evaluation Location: Classroom

Expected Completion Time: 20/30 minutes (RO/SRO) Time Critical Task: No Alternate Path Task: No

Start Time: _____ Stop Time:_____ Completion Time:_____

JPM Overall Rating: Pass Fail

NOTE: A JPM overall rating of fail shall be given if any critical step is graded as fail. Any grade of unsat or individual competency area unsat requires a comment.

Comments:

Evaluators Signature:_____ Date:_____

Recommended Start Location: Classroom

Simulator Set-up: None

Directions to the Instructor/Evaluator:

None

Directions to Operators:

Read Before Every JPM Performance:

For the performance of this JPM, I will function as the SM, CSO, and Auxiliary Operators. Prior to providing direction to perform this task, I will provide you with the initial conditions and answer any questions. During task performance, I will identify the steps to be simulated, or discuss and provide cues as necessary.

Read Before Each Evaluated JPM Performance:

This evaluated JPM is a measure of your ability to perform this task independently. The Control Room Supervisor has determined that a verifier is not available and that additional / concurrent verification will not be provided; therefore it should not be requested.

Read Before Each Training JPM Performance:

During this Training JPM, applicable methods of verification are expected to be used. Therefore, either another individual or I will act as the additional / concurrent verifier.

Notes to Instructor / Evaluator:

1. Critical steps are identified in grading areas as **Pass/Fail.**
2. During Evaluated JPM:
   - Self verification shall be demonstrated.
3. During Training JPM:
   - Self verification shall be demonstrated.
   - No other verification shall be demonstrated.

References:

1. GAP-FFD-02

Tools and Equipment:

1. Calculator

Task Standard: Determine Personnel Availability for Overtime IAW GAP-FFD-02.

Initial Conditions:

1. The plant is shutdown.
2. In order to support critical path work required for startup, personnel overtime will be required for the night shift on October 26 from 1830-0630.
3. All the overtime hours will be spent performing (ROs) or supervising (SROs) field activities.

Initiating Cues:

1. From the provided list of personnel working hours, determine who is eligible to work a complete 12 hours of overtime beginning at 1830 on October 26 without requiring an Overtime Deviation Request IAW GAP-FFD-02.

2. If an Overtime Deviation Request would be required for individual(s), state the work hour limit(s) which would be exceeded IAW GAP-FFD-02.

3. SROs ONLY – Complete the appropriate sections of an Overtime Deviation Request Form for all individuals who would need a deviation approved to cover the shift.

EXAMINER NOTE: FOR ROs – Provide Attachments A & C.
FOR SROs – Provide Attachments A, B & D, and Blank Overtime Deviation Request Form.

Performance Steps	Standard	Grade
1. Provide repeat back of initiating cue. *Evaluator Acknowledge repeat back providing correction if necessary.*	Proper communications used for repeat back (GAP-OPS-O1/Operations Manual)	Sat/Unsat

RECORD START TIME _____

2. Obtain a copy of the reference procedure and review/utilize the correct section of the procedure.	GAP-FFD-02 obtained	Sat/Unsat

3.	**FOR ROs** - Reviews work hours for Reactor Operators 1 thru 3	ROs - Determines the following: RO #1 – Eligible RO #2 – Not Eligible – would exceed 72 hours in 7 day period RO #3 – Not Eligible – would exceed 24 hours in a 48 hour period	**Pass/Fail**
	FOR SROs - Reviews work hours for Reactor Operators 1 thru 3 and Senior Reactor Operators 1 and 2	SROs – Determines the above limitations plus the following: SRO #1 – Eligible SRO #2 – Not Eligible – would exceed 16 hours in a 24 hour period	
4.	**FOR SROs** – Completes Overtime Deviation Request Form	Completes Columns 1 and 2 of Part 1 of GAP-FFD-02 Attachment 1, per attached key	**Pass/Fail**
		Completes Columns 3 and 4 of Part 1 of GAP-FFD-02 Attachment 1, per attached key	Sat/Unsat
		Completes Part 2 of GAP-FFD-02 Attachment 1, per attached key	Sat/Unsat

TERMINATING CUE: FOR ROs, JPM Attachment C completed. **FOR SROs**, JPM Attachment D and GAP-FFD-02 Attachment 1 completed

RECORD STOP TIME _____

ATTACHMENT A - ROs

RO #1							
10/19	10/20	10/21	10/22	10/23	10/24	10/25	10/26
1830-0642 (includes 12 minutes of turnover time)	1830-0642 (includes 12 minutes of turnover time)	OFF	1830-0730 (includes 60 minutes of turnover time)	1830-0542 (includes 12 minutes of turnover time)	1830-0642 (includes 12 minutes of turnover time)	1830-0706 (includes 36 minutes of turnover time)	OFF

RO #2							
10/19	10/20	10/21	10/22	10/23	10/24	10/25	10/26
OFF	1830-0642 (includes 12 minutes of turnover time)	1830-0630 (includes 0 minutes of turnover time)	1830-0642 (includes 12 minutes of turnover time)	1830-0654 (includes 24 minutes of turnover time)	1830-0642 (includes 12 minutes of turnover time)	1830-0642 (includes 12 minutes of turnover time)	OFF

RO #3							
10/19	10/20	10/21	10/22	10/23	10/24	10/25	10/26
1830-0642 (includes 12 minutes of turnover time)	1830-0630 (includes 0 minutes of turnover time)	1830-0648 (includes 18 minutes of turnover time)	1830-0642 (includes 12 minutes of turnover time)	1830-0642 (includes 12 minutes of turnover time)	OFF	1830-0742 (includes 12 minutes of turnover time)	OFF

ATTACHMENT B - SROs

SRO #1							
10/19	10/20	10/21	10/22	10/23	10/24	10/25	10/26
1830-0642 (includes 12 minutes of turnover time)	1830-0642 (includes 12 minutes of turnover time)	OFF	1830-0735 (includes 65 minutes of turnover time)	OFF	1830-0642 (includes 12 minutes of turnover time)	1830-0720 (includes 50 minutes of turnover time)	OFF

SRO #2							
10/19	10/20	10/21	10/22	10/23	10/24	10/25	10/26
1830-0642 (includes 12 minutes of turnover time)	1830-0630 (includes 0 minutes of turnover time)	1830-0648 (includes 18 minutes of turnover time)	1830-0642 (includes 12 minutes of turnover time)	OFF	0630-1830 (includes 0 minutes of turnover time)	OFF	0500-1200 (includes 0 minutes of turnover time)

ATTACHMENT C – RO Answer Sheet

	Eligible to work without an Overtime Deviation Request? (Yes/No)	If No, what work hour limit(s) would be exceeded IAW GAP-FFD-02?
RO #1		
RO #2		
RO #3		

ATTACHMENT D – SRO Answer Sheet

	Eligible to work without an Overtime Deviation Request? (Yes/No)	If No, what work hour limit(s) would be exceeded IAW GAP-FFD-02?
RO #1		
RO #2		
RO #3		
SRO #1		
SRO #2		

Initial Conditions:

1. The plant is shutdown.
2. In order to support critical path work required for startup, personnel overtime will be required for the night shift on October 26 from 1830-0630.
3. All the overtime hours will be spent performing (ROs) or supervising (SROs) field activities.

Initiating Cues:

1. From the provided list of personnel working hours, determine who is eligible to work a complete 12 hours of overtime beginning at 1830 on October 26 without requiring an Overtime Deviation Request IAW GAP-FFD-02.

2. If an Overtime Deviation Request would be required for individual(s), state the work hour limit(s) which would be exceeded IAW GAP-FFD-02.

3. SROs ONLY – Complete the appropriate sections of an Overtime Deviation Request Form for all individuals who would need a deviation approved to cover the shift.

Constellation Energy

Nine Mile Point Nuclear Station
Station Administrative Procedure

GAP-FFD-02

CONTROL OF WORKING HOURS

Revision 01700

50.59 Review

Tech Spec.

INFORMATION USE

Applicable To:

☒ Nine Mile Point Nuclear Station, Units 1 and 2

Sponsor: Director-Licensing (NMP)

Approval Authority: Plant General Manager

SUMMARY OF ALTERATIONS

Revision	Change	Summary of Revision or Change
017	00	Reworded Section 5.3.A
		Section 7: Added guidance for retention of monthly overtime reports.

TABLE OF CONTENTS

SECTION	TITLE	PAGE
1.0	INTRODUCTION	4
1.1	Purpose	4
1.2	Scope/Applicability:	4
2.0	REFERENCES	4
2.1	Developmental References	4
2.2	Performance References	4
3.0	DEFINITIONS	4
4.0	RESPONSIBILITIES	5
5.0	PROCESS	5
5.1	Work Hour Limits	5
5.2	Exceeding Work Hour Limits	6
5.3	Review of Overtime Worked / Independent Review	9
6.0	BASES	9
7.0	RECORDS	9
Attachment 1, OVERTIME DEVIATION REQUEST		10

1.0 INTRODUCTION

1.1 Purpose

A. To establish administrative controls necessary for the implementation of technical specification requirements on individual working hours.

B. To ensure Station Personnel are physically/mentally fit for duty to perform job duties during extended working hour periods.

1.2 Scope/Applicability:

A. The work hour limits specified in Section 5.1.B of this procedure apply to all station and non-station personnel working at NMP.

B. The documentation requirements of Section 5.2.E apply only to personnel who perform or directly supervise those who perform safety-related functions, specially:

- Licensed senior reactor operators, reactor operators, and non-licensed operators.
- Chemistry, Radiation Protection, and Reactor Analyst Technicians.
- Key Maintenance personnel as defined in Section 3.B.
- Personnel who perform inspections, examinations, or tests on safety-related Structures, Systems or Components. **[N003]**

2.0 REFERENCES

2.1 Developmental References

A. Unit 1 Technical Specifications, Section 6.2.2, Unit Staff

B. Unit 2 Technical Specifications, Section 5.2.2, Unit Staff

C. Unit 2 USAR, Section 1.1.0, Position on NUREG-0737 – I.A.1.3, Shift Manning

2.2 Performance References

None

3.0 DEFINITIONS

A. 7 Day Period

A seven calendar day rolling period beginning at 0000 hours on the first day and ending at 2400 hours on the seventh day. **[N002]**

3.0 (Continued)

B. Key Maintenance Personnel

Those personnel who are responsible for the correct performance of maintenance, repair, modification or calibration of safety-related structures, systems, and components, and those personnel who are performing or immediately supervising the performance of such activities (reference GL 83-14).

4.0 RESPONSIBILITIES

The following individuals and organizations are assigned responsibilities within this procedure:

A. Plant General Manager

B. Managers/Directors

C. General Supervisors/Supervisors

D. Individuals who work in excess of the limitations stated in Section 5.1 of this procedure

5.0 PROCESS

5.1 Work Hour Limits

NOTE

Work hour limits are established to ensure that individuals performing activities that directly impact personnel safety and the safe and reliable operation of the plant are not overly fatigued such that their mental alertness and decision-making ability might be impaired.

A. Managers/Directors shall ensure adequate shift coverage is maintained without routine heavy use of overtime. The objective shall be to have operating personnel work a normal 8-12 hour day, nominal 40-hour week while the facility is operating.

B. However, when circumstances dictate working beyond scheduled working hours, the following limitations apply:

5.1 (Continued)

NOTE

For criteria in Section 5.1.B.1 below, turnover time should NOT be included. Turnover time of greater than 1 hour for any individual tour of duty is not exempted from individual overtime hours.

The below periods are consecutive rolling periods and are not based on calendar work weeks.

1. Individuals identified in Section 1.2 should not be permitted to work more than:

   a. 16 hours straight

   b. 16 hours in any 24 hour period

   c. 24 hours in any 48 hour period

   d. 72 hours in any 7 day period

2. Work in excess of these limits shall NOT be routinely authorized.

C. There should be a break in an individual's work schedule of at least 8 hours following a work period for which work goes beyond the limitations in Step 5.1.B.

D. The requirements and limits specified in Steps 5.1.B and 5.1.C apply to all hours worked if any portion of an individual's total work time is spent performing or supervising field activities.

E. Individuals working a 12 hour shift schedule, who, as a result of transition in and out of daylight savings time, will exceed the 24 hours in any 48 hour period guideline, are authorized to deviate from the guideline for the one hour transition period. No Overtime Deviation Request is required to be completed for this deviation.

5.2 Exceeding Work Hour Limits

A. It is recognized that deviations from the "Work Hour Limits" may occasionally occur. The use of overtime should be limited to circumstances where essential work must be done on an accelerated schedule and, except during extended shutdown periods, should be considered on an individual basis and not for the entire staff on a shift.

5.2 (Continued)

B. Circumstances that may warrant deviating from the guidelines of Section 5.1 include, but are not limited to:

- To respond to a Limiting Condition for Operation (LCO).
- To complete a work activity where it is safer to complete than to secure.
- To complete work affecting critical path during a shutdown.
- To complete work on a problem immediately affecting nuclear or industrial safety.
- Absenteeism.
- Weather-related extension of work periods.

C. All paid overtime should be approved by authorized supervision before the overtime is worked.

D. The following are the requirements applicable to personnel who do NOT perform or directly supervise those who perform safety-related functions. Refer to Section 5.2.E for additional guidance.

1. Personnel shall track their work hours and notify their supervisors if they expect to reach the limits of Section 5.1.

2. Prior to exceeding any of the work hour limits in Section 5.1, personnel shall obtain verbal approval from their Supervisor, General Supervisor, Director, or Manager. Approval shall be given only if the following conditions are met:

   - The work activity is necessary to support safe and reliable operation of the plant.

     AND

   - Other personnel cannot reasonably be made available to perform the work activity.

3. Personnel shall generate a Condition Report if work hour limits were exceeded without obtaining prior approval.

4. Supervisors shall:

   a. Ensure personnel are fit for duty at all times.

   b. Make more frequent direct observations of personnel exceeding work hour limits.

5.2 (Continued)

NOTE

The following personnel are required to complete Overtime Deviation Requests:

- Operations – Personnel below General Supervisor level (except OPS Support)
- Maintenance – Personnel below General Supervisor level
- Chemistry – Supervisors and below
- Rad Protection – Supervisors and below
- Radwaste – Supervisors and below
- Personnel who *perform* inspection of *safety related* equipment including:
  - Quality Inspection Personnel
  - Inservice Inspection and Test Personnel
  - Contract Inspection Personnel **[N004]**

E. The following are the requirements applicable to personnel who perform or directly supervise those who perform safety-related functions.

1. Except as allowed in Section 5.2.D, Supervisors of personnel who expect to exceed the limitations of Section 5.1 shall complete Attachment 1, Overtime Deviation Request.

   a. The supervisor shall sign the Overtime Deviation Request form. The signature attests that the supervisor has verified:

      - No one will work greater than 84 hours, exclusive of turnover time, in a 7-day period.
      - Personnel will be periodically monitored to assess their fitness for duty, and to take action as appropriate, to ensure worker fatigue does not jeopardize nuclear or personnel safety.

   b. Except for unusual and unanticipated circumstances, overtime should be planned in advance. Blanket overtime deviations will not be approved. **[N0001]**

2. Attachment 1, Overtime Deviation Request shall be forwarded to the applicable Department Manager or Director for review and concurrence.

3. Attachment 1, Overtime Deviation Request shall be approved in advance of exceeding limits by the Plant General Manager or higher level of management.

5.2 (Continued)

4. Completed Attachment 1's shall be forwarded to the Administrative Assistant to the Plant General Manager.

5.3 Review of Overtime Worked / Independent Review

A. The Director of Human Resources (HR) shall ensure that overtime is reviewed on a monthly basis. The scope of monthly review shall include personnel identified in Section 1.2.B of this procedure to assure excessive hours have not been worked. It will be documented in a monthly report and supplied to the Plant General Manager.

B. If the review determines that excessive hours of overtime have been assigned then a Condition Report shall be initiated.

6.0 BASES

[N001] NCTS 503524-10, NMPC will review all department's methods of overtime control and tracking.

[N002] DER C-95-3190 Provide definition for 7-day period.

[N003] DER C-91-Q-0464 Ensure overtime controls are applicable to personnel who perform safety-related functions (including contractors) as expressed in NRC Information Notice 91-36.

[N004] DER NM-2001-1737 Apparent reliance on the excessive use of overtime deviations to complete RFO16.

7.0 RECORDS

Completed Attachment 1's, Overtime Deviation Request, shall be retained by the Administrative Assistant to the Plant General Manager for one year and then may be discarded.

Completed monthly independent Overtime Report shall be maintained by the Human Resources Department for one year and then may be discarded.

LAST PAGE

Attachment 1, OVERTIME DEVIATION REQUEST

OVERTIME DEVIATION REQUEST

PART 1 - TYPE OF OVERTIME DEVIATION

1. More than 16 consecutive hours
2. More than 16 hours in any 24 hour period
3. More than 24 hours in a 48 hour period
4. More than 72 hours in a 7 day period
5. Less than 8 hour break between work periods

Name of Personnel (List Names Individually)	TYPE OF OVERTIME DEV. (1-5)	TIME PERIOD OF DEVIATION	
		FROM (DATE/TIME)	TO (DATE/TIME)
RO #2	4	10/26 1830	10/27 0630
RO #3	3	10/26 1830	10/27 0630
SRO #2	2	10/26 1830	10/27 0630

PART 2 –

A. Reason for Deviation

Support critical path work required for startup (or similar)

B. Method to monitor employee physical/mental fitness

More frequent direct observation (or similar)

Supervisor (Print/Signature)* -Signed-	Date -Dated-
Manager (Print/Signature)	Date

Note: Ensure deviation is approved by the Plant General Manager before scheduling overtime.

***Upon signing, the Supervisor** has verified :1) that no one will work greater than 84 hours, exclusive of turnover time, in a 7-day period. AND 2) that personnel will be periodically monitored to assess their fitness for duty, and to take action as appropriate, to ensure worker fatigue does not jeopardize nuclear or personnel safety.

PART 3 – Additional Actions

Plant General Manager Approval	Date

Approved Overtime Deviation request forms to be retained in the Plant General Manager's Office in accordance with NIP-RMG-01.

NRC JPM SRO EC
Constellation Energy Group
NINE MILE POINT UNIT 1
OPERATOR JOB PERFORMANCE MEASURE

Title: Review of Surveillance Test (ST) Revision: NRC 2008

Task Number: N/A

Approvals:

8/14/2008

General Supervisor Date
Operations Training (Designee)

N/A – Exam Security
General Supervisor Date
Operations (Designee)

N/A – Exam Security
Configuration Control Date

Performer:_____ (SRO)

Trainer/Evaluator:_____

Evaluation Method: Perform

Evaluation Location: Classroom

Expected Completion Time: 20 minutes Time Critical Task: No Alternate Path Task: No

Start Time: _____ Stop Time:_____ Completion Time:_____

JPM Overall Rating: Pass Fail

NOTE: A JPM overall rating of fail shall be given if any critical step is graded as fail. Any grade of unsat or individual competency area unsat requires a comment.

Comments:

Evaluator Signature:_____ Date:_____

Recommended Start Location: Classroom

Simulator Set-up: None

Directions to the Instructor/Evaluator:

For N1-ST-Q19, enter the surveillance data using an archived record from an actual performance of the surveillance. EXCEPTION: Step 8.1.12.b, enter the CW Circ Pump 11 d/p = 21.2, and Step 8.3.2, enter the 210.1-01 CLOSE TO OPEN time = 3.0 seconds.

Directions to Operators:

Read Before Every JPM Performance:

For the performance of this JPM, I will function as the SM, CSO, and Auxiliary Operators. Prior to providing direction to perform this task, I will provide you with the initial conditions and answer any questions. During task performance, I will identify the steps to be simulated, or discuss and provide cues as necessary.

Read Before Each Evaluated JPM Performance:

This evaluated JPM is a measure of your ability to perform this task independently. The Control Room Supervisor has determined that a verifier is not available and that additional / concurrent verification will not be provided; therefore it should not be requested.

Read Before Each Training JPM Performance:

During this Training JPM, applicable methods of verification are expected to be used. Therefore, either another individual or I will act as the additional / concurrent verifier.

Notes to Instructor / Evaluator:

1. Critical steps are identified as **Pass/Fail**.
2. During Evaluated JPM:
   - Self-verification shall be demonstrated.
3. During Training JPM:
   - Self-verification shall be demonstrated.
   - No other verification shall be demonstrated.

References:

1. N1-ST-Q19; Section 10.0.
2. LER 2003-004.
3. K/A 2.2.12 (3.4).
4. K/A 2.2.24 (3.8).

Tools and Equipment:
1. None

Task Standard:

Complete Section 10.1, Operations Review, and identify the unsatisfactory results for N1-ST-Q19. Determine the appropriate actions in response to the unsatisfactory conditions.

Initial Conditions:

1. You are the Unit 1 Shift Manager.
2. Unit 1 is at 100% power.
3. N1-ST-Q19 has just been completed up to the Operations Review.

Initiating cue:

"(Operator's name), using the completed surveillance provided, complete Section 10.1, Operations Review. Record the results of your review and any required actions."

Performance Steps	*Standard*	*Grade*
1. Provide repeat back of initiating cue. *Evaluator Acknowledge repeat back providing correction if necessary*	Proper communications used for repeat back (GAP-OPS-O1)	Sat/Unsat
RECORD START TIME _____		
2. Obtain a copy of the reference procedure and review/utilize the correct section.	Copy of completed surveillance will be provided to the performer.	Sat/Unsat
3. **N1-ST-Q19:** Completes section 10.1, Operations Review, and references procedure sections as applicable to verify the required data. Evaluates the data.	Transcribes surveillance data to the appropriate table in section 10.1.	Sat/Unsat
	Determines acceptance criteria NOT in acceptable range for CW Circ Pump 11 d/p. Value is in the REQUIRED ACTION range.	**Pass/Fail**
	Declares CW Circ Pump inoperable.	**Pass/Fail**
	Informs Condition Monitoring Group (CMG).	Sat/Unsat
	Determines 210.1-01 CLOSED TO OPEN stroke time is UNSAT. Value is above the IST limit, but within the Limiting Stroke Time.	**Pass/Fail**
	Determines 210.1-01 may be stroked a second time.	Sat/Unsat
	Determines pump to be entered in ESL.	Sat/Unsat
	Determines TS 3.4.5 entry is required; restore CW pump to operable within 7 days.	**Pass/Fail**

Performance Steps	*Standard*	*Grade*
	Determines entry into SM log required.	Sat/Unsat
	Determines yellow clearance tag required for CW pump.	Sat/Unsat
	Determines ACR and CR to be written.	Sat/Unsat
	Informs IST/CMG.	Sat/Unsat
	Informs Manager Operations.	Sat/Unsat

TERMINATING CUE:
Operations Review of N1-ST-Q19 is complete. Required actions and notifications are identified.

RECORD STOP TIME_____

Initial Conditions:

1. You are the Unit 1 Shift Manager.
2. Unit 1 is at 100% power.
3. N1-ST-Q19 has just been completed up to the Operations Review.

Initiating cue:

"(Operator's name), using the completed surveillance provided, complete Section 10.1, Operations Review. Record the results of your review and any required actions."

NINE MILE POINT NUCLEAR STATION UNIT 1

SURVEILLANCE TEST PROCEDURE

N1-ST-Q19

REVISION 08

CONTROL ROOM HVAC SYSTEM OPERABILITY TEST

TECHNICAL SPECIFICATION REQUIRED

Approved by:
J. Krakuszeski

Manager Operations

3/20/08
Date

SATELLITE MASTER COPY TRAINING ONLY

CONTROLLED WORKING COPY
VERIFIED BY I-3 2
NOT TO BE USED AFTER Tomorrow 1800
DATE/TIME

Effective Date: March 21, 2008

LIST OF EFFECTIVE PAGES

Page No.	Change No.	Page No.	Change No.
Coversheet		23	
i.		24	
ii.....		25	
1		26	
2		27	
3		28	
4		29	
5		30	
6		31	
7			
8			
9			
10.....			
11.....			
12.....			
13.....			
14.....			
15.....			
16.....			
17.....			
18.....			
19.....			
20.....			
21.....			
22.....			

TABLE OF CONTENTS

SECTION		PAGE
1.0	PURPOSE	1
2.0	TECHNICAL SPECIFICATIONS	1
3.0	REFERENCES AND COMMITMENTS	1
4.0	GENERAL TEST METHODS	2
5.0	TEST EQUIPMENT	5
6.0	PRECAUTIONS AND LIMITATIONS	5
7.0	PREREQUISITES	7
8.0	PROCEDURE	11
8.1	Chilled Water Train 11 Operability Test	11
8.2	Chilled Water Train 12 Operability Test	16
8.3	Stroke Test of BV 210.1-01 and BV 210.1-02, Cooling Coil 11 and 12 Inlet BVs	21
8.4	Stroke Test of 210.1-56, Chill Water Supply to Control Room Coolers	22
9.0	RETURN TO NORMAL	23
10.0	ACCEPTANCE CRITERIA	24
ATTACHMENT 1: TEST PERSONNEL SIGNATURE AND INITIAL LOG		31
ATTACHMENT 2: CHILLED WATER CIRCULATING PJMP SKETCH		32
ATTACHMENT 3: CHILLED WATER CIRCULATING PJMP TEST FLOW DIAGRAM		33

1.0 PURPOSE

1.1 To provide instructions necessary to perform Control Room HVAC System Valve and Pump operability testing in accordance with Plant Technical Specifications and the NMP Pump and Valve Inservice testing Program.

(UFSAR) 1.2 The purpose of this procedure is also to manage aging of components

2.0 TECHNICAL SPECIFICATIONS

2.1 Surveillance Requirements

Section 6.5.4, Inservice Testing Program

2.2 Limiting Conditions for Operation (LCO)

2.2.1 Section 3.4.5.e, Control Room Air Treatment System

2.3 Frequency

This procedure shall be performed quarterly during all periods when the system is required for operation.

3.0 REFERENCES AND COMMITMENTS

3.1 Licensee documentation

3.1.1 NMPNS-IST-001, NMP Pump and Valve Inservice Testing Program

3.1.2 Renewed Facility Operating License No. DPR-63, dated October 31, 2006

3.1.3 UFSAR, Appendix C, Section C.1.13 Closed-Cycle Cooling Water System Program

3.2 Standards, Regulations, and Codes

ASME Section XI, 1989 Edition

3.3 Policies, Programs, and Procedures

3.3.1 N1-TDP-IIT-0102, Analysis and Trending of Inservice Testing Results

3.3.2 N1-OP-49, Control Room Ventilation System Operating Procedure

3.3.3 N1-ITP-01, Ultrasonic Flow Test

3.3.4 GAI-REL-06, Vibration Measurement

3.4 Technical Information

3.4.1 C-18021-C, Turbine Building HVAC Air Conditioning System for Laboratory Areas

3.4.2 C-18046-C, Air Conditioning System for the Administration Building HVAC

3.4.3 C-18047-C, Control Rooms Heating, Ventilating and Air Conditioning

3.4.4 Problem Report 1533

3.4.5 Problem Report 1574

3.4.6 DER 1993-0924, Difficulty in achieving IST Test results due to isolated Administration Building cooling coil.

3.4.7 DCR 1-93-001-LS221 Control Room Chilled Water System

3.4.8 Configuration Change 1M00641, Rev 1

3.5 Commitments

Sequence Number	Commitment Number	Description
None		

4.0 GENERAL TEST METHODS

4.1 Subsections 8.1, 8.2, 8.3 and 8.4 may be performed in any order as necessary to facilitate Post-Maintenance Testing and to minimize shifting of plant equipment. Steps within these subsections shall be performed in the order specified.

NOTE: Failure of Operations Department to analyze Inservice Testing (IST) test data during the same shift could result in a violation of ASME Section XI requirements.

4.2 Subsection 8.1 CMG tests the following components:

- 210.1-37, Chilled Water Circulating Pump 11
- 70-25, RBCLC Inlet to Control Room Chiller 11 BV
- 210.1-34, Chilled Water Circulating Pump 11 Discharge Check Valve in the forward flow direction
- 210.1-35, Chilled Water Circulating Pump 12 Discharge Check Valve in the reverse flow direction

4.3 Subsection 8.2 CMG tests the following components:

- 210.1-36, Chilled Water Circulating Pump 12
- 70-26, RBCLC Inlet to Control Room Chiller 12 BV
- 210.1-35, Chilled Water Circulating Pump 12 Discharge Check Valve in the forward flow direction
- 210.1-34, Chilled Water Circulating Pump 11 Discharge Check Valve in the reverse flow direction

4.4 Subsection 8.3 CMG tests 210.1-01, Cooling Coil 11 Inlet BV AND 210.1-02, Cooling Coil 12 Inlet BV.

4.5 Subsection 8.4 CMG tests 210.1-56, Chilled Water Supply to Control Room Coolers BV.

(IST) 4.6 Chilled Water (CW) Circulating Pump Testing

4.6.1 Pump inlet pressures of CW Circulating Pumps 11 and 12 are read from the permanent plant pump suction gauges.

4.6.2 CW Circulating Pump differential pressures are recorded using the installed DP gauges.

4.6.3 CW Circulating Pump flow rates are taken using an ultrasonic flowmeter temporarily installed on the common pump suction header in accordance with N1-ITP-01.

4.6.4 ASME Section XI requires gauge fluctuation to be less than ± 2% of the observed reading. Hydraulic instrumentation may be dampened by using gauge snubbers or by throttling small valves in the instrument lines.

(IST) 4.7 Chilled Water Valve Testing

4.7.1 Full exercise testing of power operated valves consists of operating the valve to the position(s) required to fulfill its safety function.

4.7.2 Cycling of valves consists of full exercising a valve from its normal position to the opposite position and returning it to its normal position again by full exercising as indicated by observing indirect evidence that signals the change of disk position.

4.7.3 CW Circulating Pump Discharge Check Valve exercise testing in the forward flow direction consists of passing the required design flow rate through the valve.

4.7.4 CW Circulating Pump Discharge Check Valve exercising in the reverse flow direction consists of verifying the check valve disk is seated by observing the change in pump discharge pressure when the pump is stopped and the redundant pump is started.

4.7.5 Full stroke times of power operated valves are measured during full exercise testing in the direction or directions specified in the NMP1 Pump and Valve Inservice Testing Program Plan. Full stroke times are measured to within a tenth of a second for stroke time of ≤ 10 seconds. Full stroke time of > than 10 seconds are measured to the nearest second. Full stroke time is that time interval from the initiation of the actuating signal to the end of the actuating cycle.

4.7.6 Stroke Time Descriptions

a. Limiting Stroke Time {LS} values per the Inservice Pump and Valve Program Plan and ASME/ANSI OMa-1988 Part 10, 4.2.1.4 are shown as "{}", such as {<30 sec}, and are the limits beyond which a valve shall be considered INOPERABLE.

b. Acceptance Criteria for steps required for compliance with the Inservice Pump and Valve Testing Program Plan and ASME/ANSI OMa-1988 Part 10, 4.2.1.8 (IST) are shown in parenthesis, such as (<20), and is the IST Acceptable Range. Stroke Time outside the IST Acceptable Range, and below the Technical Specification and/or Limiting Stroke Time value require Corrective Action.

- Values shown as () are the IST Acceptable range (or Acceptance Criteria), valves outside the IST Acceptable range shall be immediately retested (only one time) or declared INOPERABLE.
- IST values shown as {} are the Limiting Stroke Time Values. Valve stoke times exceeding this range are INOPERABLE, retest is not allowed.
- Technical Specification values are shown as [ ]. Valve stroke times exceeding this range are INOPERABLE, retest is not allowed.

4.7.7 Subsection 8.4 may be performed concurrently with N1-ST-M9, Control Room Air Treatment Operability Test.

4.7.8 Fail Safe Testing where required, is accomplished by removing the normal source of power from the valve and observing proper valve operation to the required fail safe position. Unless otherwise specified, this function is fulfilled by cycling the valve using the control switch.

4.8 Independent Verification

Independent verification may be performed after the completion of Section 8.0, except those marked with an asterisk (*). Those marked with an asterisk must be performed in the order specified.

4.9 Post-Maintenance Testing

This procedure may be used for Post-Maintenance testing and verification of operability for any equipment covered by this procedure. When used for this purpose, Sections 1.0 through 6.0, and the applicable subsections/steps of sections 7.0 through 10.0 shall be performed. All IST tests applicable to a particular component are required to be performed to verify operability.

4.10 Use of Not Applicable (N/A) or Not Required (N/R) for Procedure Steps

4.10.1 N/A or N/R may be used where the procedure specifically allows for it; or,

4.10.2 N/A or N/R may be used to eliminate steps when only a portion of the procedure is performed, such as Post-Maintenance testing, retest to verify questionable data, or other testing to be specified in Section 7.0. Document the reason for using N/A or N/R in Section 10.1, Remarks.

5.0 TEST EQUIPMENT

5.1 Vibration Detector and Vibration Detector Transducers with a required accuracy of ± 5%.

5.2 Calibrated stopwatch capable of measuring one tenth of a second.

5.3 Ultrasonic Flowmeter with a required accuracy of ± 2%.

5.4 0-30 psid DP cell with a required accuracy of ± 2%.

5.5 Acceptance Criteria Instrumentation

Instrument ID	Instrument Name	Location
PI-210.1-38R	Pressure Indicator	El. 300 S-E
PI-210.1-39R	Pressure Indicator	El. 300 S-E
PI-210.1-40R	Pressure Indicator	El. 300 S-E
PI-210.1-41R	Pressure Indicator	El. 300 S-E

6.0 PRECAUTIONS AND LIMITATIONS

6.1 Applicable Radiological precautions shall be observed, Radiation Protection shall be contacted for guidance, as required.

6.2 All ALARA practices shall be observed to minimize personnel exposure and spread of contamination.

6.3 Failure to notify the Shift Manager (SM) immediately whenever a procedural step cannot be completed as stated, or if any other problem develops during the test may result in invalidating the test results.

6.4 The SM shall be notified immediately if the test results exceed the Acceptance Criteria.

6.5 Failure to use calibrated test equipment of the specified accuracy may result in invalidating test data obtained.

6.6 Operation of hand held radios in the vicinity of vibration monitoring equipment may adversely affect vibration recordings.

6.7 Failure to shift Chilled Water Circulating Pumps in the correct sequence may cause the running Chiller to trip on low chilled water flow and result in a loss of Control Room air conditioning.

6.8 Total Chill Water System flow should not exceed 200 gpm prior to and after IST testing.

6.9 Cycling the Control Room Chill Water System Chillers, Chill Water Pumps or TCV may require entry into the LCO for the Control Room Air Treatment System (Tech Spec. 3.4.5). (See N1-OP-49 for T.S. requirements associated with redundant equipment.)

6.10 Failure to wait 10 to 15 minutes following a shutdown to allow the motor windings to cool before restarting a compressor will induce a higher current inrush and potentially exceed the breaker limits resulting in a trip.

Initials

7.0 PREREQUISITES

7.1 Specify the reason for test performance.

(X) Routine Surveillance, including IST

(__) Post-Maintenance Testing, WO Number _____

(__) Inoperable Component

(__) Other (specify) _____ TH

7.2 Notify Condition Monitoring Group (CMG) Department prior to the start of the test that assistance will be required to install Flowmeter.

Dave Brown / Today / 0630 TH

Person Notified / Date / Time

7.3 Personnel responsible for the performance of this test have read and thoroughly understand its content prior to test commencement. TH

7.4 Verify permanent plant instrumentation is calibrated.

Instrument Name	Instrument ID Number	Calibration Due Date
Pressure	PI 210.1-38R	12/31/08
Pressure	PI 210.1-39R	12/31/08
Pressure	PI 210.1-40R	12/31/08
Pressure	PI 210.1-41R	12/31/08
Temperature	TI 210.1-13	12/31/08

TH

Initials

7.5 CMG Verify portable test instrumentation is calibrated.

Instrument Name	Range Used	Instrument ID/ Serial Number	Calibration Due Date	Initials
Vibration Detector	N/A	6679	12/31/08	DB CMG
Flowmeter	N/A	11275	12/31/08	DB CMG
Flowmeter	N/A	11278	12/31/08	DB CMG
D/P	0-30psig	3538	12/31/08	DB CMG
Stopwatch	N/A	10809	12/31/08	DB CMG

7.6 Perform the following:

PLANT IMPACT:

1. **DURING PERFORMANCE OF SUBSECTIONS 8.1 AND 8.2 ONE CONTROL ROOM CHILLER WILL BE TAKEN OUT OF SERVICE.**
2. **DURING PERFORMANCE OF SUBSECTIONS 8.1 AND 8.2 A TEMPORARY D/P CELL WILL BE INSTALLED AT THE PUMP SUCTION AND DISCHARGE PRESSURE GAUGE TEST TAPS.**
3. **TECH. SPEC. L.C.O. PER 3.4.5 APPLY.**

a. Discuss the Plant Impact with the SM. Obtain SM permission to perform procedure and acknowledgement that temporary alterations are to be used. JA SM

b. Notify the CRO that procedure is to be performed and that temporary alterations are used. Discuss the Plant Impact. DS

7.7 CMG verify vibration point Red Dots installed on 210.1-37, Chilled Water Circulating Pump 11 AND 210.1-36, Chilled Water Circulating Pump 12, as indicated on Attachment 2, Chilled Water Circulating Pump Sketch. Document vibration point Red Dots re-established in Section 10.2, Remarks. DB CMG

7.8 CMG install Temporary Ultrasonic Flowmeter on Common Chilled Water Circulating Pump Suction Line as shown on Attachment 3 in accordance with N1-ITP-01. DB CMG

Initials

7.9 Establish NO flow condition to allow CMG to Zero portable ultrasonic Flowmeter as follows:
(__) N/A, Establishing of a NO flow condition is not required to zero Flowmeter.

NOTE: Securing the Control Room Ventilation System Chillers and Chilled water pump renders the Control Room Ventilation System Inoperable per T.S. 3.4.5.

7.9.1 Notify the SM to Log entry into appropriate LCO for Plant condition. TH

7.9.2 Place in OFF position, 111 CHILLER COMPRESSOR 112 OFF/AUTO/RUN Switch. TH

7.9.3 Place in OFF position, 121 CHILLER COMPRESSOR 122 OFF/AUTO/RUN Switch. TH

7.9.4 Confirm off, red RUN lights for Compressors 111,112, 121,122. TH

7.9.5 Depress STOP Pushbutton, for running CHILLED WATER CIRCULATING PUMP 11(12) AND confirm green indicator light lit. TH

7.10 CMG zero ultrasonic flowmeters. DB
CMG

7.11 Restore from NO flow condition as follows:

(__) N/A, Establishing of a NO flow condition was not required to zero Flowmeter.

NOTES:
1. Section 8.1 starting configuration is 12 CW Circulating Pump and Control Room Chiller Operating.
2. Section 8.2 starting configuration is 11 CW Circulating Pump and Control Room Chiller Operating.

7.11.1 Restore Chill Water Circulating Pumps and Chillers as follows:

a. Depress START pushbutton for Chilled Water Circulating Pump 12 (11) ..... (X)

****

CAUTION

Failure to wait 10 to 15 minutes following a shutdown to allow the motor windings to cool before restarting a compressor will induce a higher current inrush and potentially exceed the breaker limits resulting in a trip.

****

b. Place 111 Chiller Compressor 112 Control Switch to RUN ..... (X)

c. Place 121 Chiller Compressor 122 Control Switch to RUN ..... (X)

d. Depress Chiller 11 START pushbutton ..... (X)

e. Depress Chiller 12 START pushbutton ..... (X) TH

		Initials
7.12	Repeat Steps 7.9.2 through 7.11.1.1 as required UNTIL ultrasonic Flowmeters are zeroed.	DB CMG
7.13	Notify SM to exit Control Room Ventilation System LCO (__) N/A, Establishing of a NO flow condition was not required to zero Flowmeter.	TH
7.14	The Control Room Ventilation System is in normal configuration in accordance with N1-OP-49, any exceptions have been noted and evaluated by the SM and determined to have no impact on the performance of this test.	JA SM
7.15	Record start time and date. 0700 / Today Start time Date	TH

Initials

8.0 PROCEDURE

NOTES:

1. The letters IST in parenthesis (IST) will denote steps required for compliance with ASME Section XI as delineated in the NMP1 Pump and Valve Inservice Testing Program Plan. If Specific Acceptance Criteria is required, the acceptable value will be given in parenthesis for example (30 sec).

2. Failure of Operations Department to analyze Inservice Testing (IST) test data during the same shift could result in a violation of ASME Section XI requirements.

8.1 Chilled Water Train 11 Operability Test

8.1.1 Verify the following:

a. 210.1-36, CW Circulating Pump 12, running. If required depress Chilled Water Circulating Pump 12 START pushbutton. TH

b. 210.1-37, CW Circulating Pump 11, off. If required depress Chilled Water Circulating Pump 11 STOP pushbutton. TH

8.1.2 CMG Install Temporary DP cell to test taps on PI 210.1-38R and PI 210.1-40R, CW Circulating Pump #11 Pump Suction and Discharge Pressure Gauges, as indicated on Attachment 3. DB

CMG

TH

Concurrent Verif.

(IST) (UFSAR) 8.1.3 Record PI 210.1-38R, CW Circulating Pump 11 Inlet Pressure.

PI 210.1-38R: 12 psig
(≥ 2.27 psig) TH

NOTE: Steps 8.1.4 through 8.1.5 perform reverse flow full exercise test of 210.1-35, CW Circulating Pump 12 Discharge Check Valve.

8.1.4 Perform the following:

a. Depress START pushbutton for Chilled Water Circulating Pump 11. TH

b. Depress STOP pushbutton for Chilled Water Circulating Pump 12. TH

Initials

8.1.4 (Cont)

c. WHEN 210.1-36, CW Circulating Pump 12, stops, THEN immediately record the following:

(IST)
(UFSAR)

1. PI 210.1-40R, CW Circulating Pump 11 Discharge Pressure.

PI 210.1-40R 31 psig TH

(IST)
(UFSAR)

2. PI 210.1-41R, CW Circulating Pump 12 Discharge Pressure.

PI 210.1-41R 11.5 psig TH

NOTE: CW Circulating Pump 11 (running) discharge pressure in Step 8.1.4c.1 should be significantly greater than CW Circulating Pump 12 (idle) discharge pressure in Step 8.1.4c.2 to verify little or no back leakage through 210.1-35.

(IST) 8.1.5 Determine if back leakage exists through 210.1-35, CW Circulating Pump 12 Discharge Check Valve as follows:

- IF pressure recorded in 8.1.4c.1 is significantly higher than pressure recorded in Step 8.1.4c.2, THEN record SAT below (little or no back leakage exists).
- IF pressure recorded in 8.1.4c.1 is NOT significantly higher than pressure recorded in Step 8.1.4c.2, THEN record UNSAT below (excessive back leakage exists).

(X) SAT (LITTLE OR NO BACK LEAKAGE)

(__) UNSAT TH

8.1.6 Notify SM to enter appropriate LCO per T.S. 3.4.5 for loss of redundant equipment (N1-OP-49). TH

8.1.7 Place CHILLED WATER CIRC. PUMP 12 circuit breaker at Power Board 1671 to OFF position. TH

SD
Concurrent Verif.

8.1.8 Manually close 210.1-35, CW Circulating Pump 12 Discharge Check Valve. TH

Initials

NOTES:

1. The Control Room Chilled Water System has been flow balanced to a system flow rate of 200 gpm using 210.1-60, Lab Air Cooling Coil Chilled Water Outlet Valve.

2. When throttling flow rate in the following step, attempt to establish the exact reference value given. If the exact value cannot be achieved, throttle flow rate as close as practical within the allowable range provided in parenthesis.

****

CAUTION

Total Chill Water System flow should not exceed 200 gpm prior to IST testing.

****

8.1.9 Unlock and Throttle 210.1-60, Lab Area Cooling Coil Chill Water Outlet Block Valve, as required to establish a flow rate of 161.6 (158.36 to 164.83) gpm as indicated by on ultrasonic flowmeter installed on 210.1-37 suction line. TH

NOTE: ASME Section XI requires the system to be run for at least 2 minutes under as stable conditions as the system permits prior to taking IST pump data. The system shall be considered stable when little or no fluctuation in pump discharge pressure exists.

(IST) 8.1.10 Verify 210.1-37 Control Room Chilled Water Pump flow rate is stable as demonstrated by little or no fluctuation in pump discharge pressure for ≥ 5 minutes using calibrated stopwatch. TH

NOTES:

1. Flow rates should be obtained by averaging the total gallons of the ultra-sonic flowmeter totalizer for a minimum of 5 minutes. If System conditions prevent 5 minute averaging, flow averaging may be performed for shorter periods.

2. 210.1-34, CW Circulating Pump 11 Discharge Check Valve, full exercise in the forward direction is verified when pump flow rate is ≥158.36 gpm.

(IST) (UFSAR) 8.1.11 Determine 210.1-37 Control Room Chilled Water Pump flow rate as follows:

Total Gallons 817.39 ÷ Collection Time 5 minutes

▫ Flow rate 163.47 gpm (158.36 to 165 gpm)
(≥158.36 gpm)

TH

SD
Ind. Verif.

Initials

8.1.12 Record the following:

(UFSAR) a. PI 210.1-38R, CW Circulating Pump 11 Inlet Pressure gauge.

PI 210.1-38R: 12.5 psig (≥ 2.27 psig) — TH

(IST) (UFSAR) b. Temporary D/P Cell, CW Circulating Pump 11 D/P.

CW Circulating Pump 11 D/P: 21.2 psid (17.190 to 21.010 psid) — TH

(IST) 8.1.13 CMG perform 210.1-37, CW Circulating Pump Number 11 vibration monitoring (refer to Attachment 2) AND record unfiltered peak velocity (in/sec) vibration data below:

- Point 1H: 0.05538 in/sec (≤ 0.153 in/sec) (Horizontal) — DB CMG
- Point 1V: 0.03664 in/sec (≤ 0.065 in/sec) (Vertical) — DB CMG
- Point 2H: 0.02857 in/sec (≤ 0.093 in/sec) (Horizontal) — DB CMG
- Point 2V: 0.02319 in/sec (≤ 0.105 in/sec) (Vertical) — DB CMG

8.1.14 CMG record 210.1-37, CW Circulating Pump Number 11, speed in rpm.

210.1-37 SPEED: 1769 rpm — DB CMG

8.1.15 Using ultra-sonic flowmeter, throttle 210.1-60 as necessary to restore system flow rate to approximately 190 gpm (≤ 200 gpm) AND record flow rate.

CW FLOW: 180 gpm (≤ 200 gpm) — TH / SD Concurrent Verif.

Initials

8.1.16 Lock 210.1-60 TH

SD
Ind. Verif.

8.1.17 Open 210.1-35 TH

SD
Ind. Verif.

8.1.18 Place CHILLED WATER CIRC. PUMP 12 circuit breaker at Power Board 1671 in ON position. TH

SD
Ind. Verif.

8.1.19 Notify SM that LCO may be exited for loss of redundant component. TH

8.1.20 Notify the SM to enter the applicable LCO for one Control Room Chiller out of service. TH

8.1.21 Perform the following to record stroke time for 70-25:

a. Verify 210.1-120, Control Room Chiller 12, running. TH

b. Verify 111 Chiller Compressor 112 switch in OFF. TH

c. Depress STOP pushbutton for Chiller 11 TH

d. Place 111 Chiller Compressor 112 switch in RUN. TH

****

CAUTION

Failure to wait 10 to 15 minutes following a shutdown to allow the motor windings to cool before restarting a compressor will induce a higher current inrush and potentially exceed the breaker limits resulting in a trip.

****

(IST) 8.1.22 Depress START pushbutton for Chiller 11 to start 210.1-119, Control Room Chiller 11, AND record Close to Open stroke time of 70-25, RBCLC Inlet to Control Room Chiller 11 BV.

70-25 CLOSE to OPEN STROKE TIME: 13.56 sec TH
(≥ 9.6 sec and ≤ 16.1 sec)
{≥ 6.5 sec and ≤ 19.33 sec}

8.1.23 Independently verify 70-25 Open. SD

Initials

8.1.24 Notify SM that LCO for single chiller operat on may be exited. TH

8.1.25 CMG remove Temporary DP cell from test taps on PI 210.1-38R and PI 210.1-40R, CW Circulating Pump #11 Pump Suction and Discharge Pressure Gauges. DB
CMG
TH
Ind. Verif.

8.1.26 Complete Section 10.1.1, Acceptance Criteria for Chilled Water Train 11 testing. TH

8.2 Chilled Water Train 12 Operability Test

8.2.1 Verify the following:

a. 210.1-37, CW Circulating Pump 11, running. If required, depress START pushbutton for Chilled Water Circulating Water Pump 11. TH

b. 210.1-36, CW Circulating Pump 12, off. If required, depress STOP pushbutton for Chilled Water Circulating Water Pump 12. TH

8.2.2 CMG install temporary DP cell to test taps on PI 210.1-39R and PI 210.1-41R, CW Circulating Pump #12 Pump Suction and Discharge Pressure Gauges, as indicated on Attachment 3. DB
CMG
TH
Concurrent Verif.

(IST) (UFSAR) 8.2.3 Record PI 210.1-39R, CW Circulating Pump 12 Inlet Pressure

PI 210.1-39R: 14.7 psig
(≥ 2.27 psig) TH

Initials

NOTE: Steps 8.2.4 through 8.2.5 perform reverse flow full exercise test of 210.1-34, CW Circulating Pump 11 Discharge Check Valve.

8.2.4 Perform the following:

a. Depress START pushbutton for Chilled Water Circulating Pump 12. TH

b. Depress STOP pushbutton for Chilled Water Circulating Pump 11. TH

c. WHEN 210.1-37, CW Circulating Pump 11, stops, THEN immediately record the following:

(IST) (UFSAR) 1. PI 210.1-41R, CW Circulating Pump 12 Discharge Pressure

PI 210.1-41R 33.5 psig TH

(IST) (UFSAR) 2. PI 210.1-40R, CW Circulating Pump 11 Discharge Pressure

PI 210.1-40R 15 psig TH

NOTE: CW Circulating Pump 12 (running) discharge pressure in Step 8.2.4c.1 should be significantly greater than CW Circulating Pump 11 (idle) discharge pressure in Step 8.2.4c.2 to verify little or no back leakage through 210.1-34.

(IST) 8.2.5 Determine if back leakage exists through 210.1-34, CW Circulating Pump 11 Discharge Check Valve as follows:

- IF pressure recorded in Step 8.2.4c.1 is significantly higher than pressure recorded in Step 8.2.4c.2, THEN record SAT below (little or no back leakage exists).
- IF pressure recorded in Step 8.2.4c.1 is NOT Significantly higher than pressure recorded in Step 8.2.4c.2, THEN record UNSAT below (excessive back leakage exists).

(X) SAT (LITTLE OR NO BACK LEAKAGE)

(__) UNSAT TH

8.2.6 Notify SM to enter appropriate LCO per T.S. 3.4.5 for loss of redundant equipment (N1-OP-49). TH

8.2.7 Place CHILLED WATER CIRC. PUMP 11 circuit breaker at Power Board 1671 in OFF position. TH

SD
Concurrent Verif.

Initials

8.2.8 Manually close 210.1-34, CW Circulating Pump 11 Discharge Check Valve. ________

NOTE: The Control Room Chilled Water System has been flow balanced to a system flow rate of 200 gpm using 210.1-60, Lab Air Cooling Coil Chilled Water Outlet Valve.

****

CAUTION

Total Chill Water System flow should not exceed 200 gpm prior to IST testing.

****

NOTE: When throttling flow rate in the following step, attempt to establish the exact reference value given. If the exact value cannot be achieved, throttle flow rate as close as practical within the allowable range provided in parenthesis.

8.2.9 Unlock and Throttle 210.1-60, Lab Area Cooling Coil Chill Water Outlet Block Valve, as required to establish a flow rate of 161 (157.78 to 164.22) gpm as indicated by on ultrasonic flowmeter installed on 210.1-36 suction line. TH

NOTE: ASME Section XI requires the system to be run for at least 2 minutes under as stable conditions as the system permits prior to taking IST pump data. The system shall be considered stable when little or no fluctuation in pump discharge pressure exists.

(IST) 8.2.10 Verify 210.1-36 Control Room Chilled Water Pump flow rate is stable as demonstrated by little or no fluctuation in pump discharge pressure for ≥ 5 minutes using calibrated stopwatch. TH

NOTES:

1. Flowrates should be obtained by averaging the total gallons of the ultra-sonic flowmeter totalizer for a minimum of 5 minutes. If System conditions prevent 5 minute averaging, low averaging may be performed for shorter periods.
2. 210.1-35, CW Circulating Pump 12 Discharge Check Valve, full exercise in the forward direction is verified when pump flow rate is ≥157.78 gpm.

(IST) (UFSAR) 8.2.11 Determine 210.1-36 Control Room Chilled Water Pump flow rate as follows

Total Gallons 795.19 ÷ Collection Time 5 minutes
= Flowrate 159.03 gpm (158 to 164 gpm) TH

SD
Ind. Verif.

Initials

8.2.12 Record the following:

a. PI 210.1-39R, CW Circulating Pump 12 Inlet Pressure gauge.

(UFSAR)

PI 210.1-39R: 15 psig
(≥ 2.27 psig) TH

(IST) (UFSAR) b. Temporary D/P Cell, CW Circulating Pump 12 D/P.

CW Circulating
Pump 12 D/P: 19.6 psid
(17.775 to 21.725 psid) TH

(IST) 8.2.13 CMG perform 210.1-36, CW Circulating Pump Number 12 vibration monitoring (refer to Attachment 2) AND record unfiltered peak velocity (in/sec) vibration data below:

- Point 1H: 0.05538 in/sec (≤ 0.145 in/sec) (Horizontal) DB CMG
- Point 1V: 0.04216 in/sec (≤ 0.133 in/sec) (Vertical) DB CMG
- Point 2H: 0.03505 in/sec (≤ 0.118 in/sec) (Horizontal) DB CMG
- Point 2V: 0.03209 in/sec (≤ 0.105 in/sec) (Vertical) DB CMG

8.2.14 CMG record 210.1-36, CW Circulating Pump Number 12, speed in rpm.

210.1-36 SPEED: 1765 rpm DB CMG

8.2.15 Using ultra-sonic flowmeter, throttle 210.1-30 as necessary to restore system flow rate to approximately 190 gpm (≤ 200 gpm) AND record flow rate. TH

CW FLOW: 183 gpm
(≤200 gpm) SD Concurrent Verif.

Initials

8.2.16 Lock 210.1-60. TH

SD
Ind. Verif.

8.2.17 Open 210.1-34. TH

SD
Ind. Verif.

8.2.18 Place CHILLED WATER CIRC. PUMP 11 circuit breaker at Power Board 1671 in ON position TH

SD
Ind. Verif.

8.2.19 Notify SM that LCO may be exited for loss of redundant equipment. TH

8.2.20 Notify the SM to enter the applicable LCO for one Control Room Chiller out of service. TH

8.2.21 Perform the following to record stroke time of 70-26:

a. Verify 210.1-119, Control Room Chiller 11, running. TH

b. Verify 121 Chiller Compressor 122 switch in OFF. TH

c. Depress STOP pushbutton for Chiller 12 TH

d. Place 121 Chiller Compressor 122 switch in RUN. TH

****

CAUTION

Failure to wait 10 to 15 minutes following a shutdown to allow the motor windings to cool before restarting a compressor will induce a higher current inrush and potentially exceed the breaker limits resulting in a trip.

****

(IST) 8.2.22 Depress START pushbutton for Chiller 12 to start 210.1-120, Control Room Chiller 12, AND record Close to Open stroke time of 70-26, RBCLC Inlet to Control Room Chiller 12 BV.

70-26 CLOSE to OPEN STROKE TIME: 14.38 sec TH
(≥ 9.9 sec and ≤ 16.5 sec)
{≥ 6.7 sec and ≤ 19.8 sec}

8.2.23 Independently verify 70-26 Open. TH

Initials

8.2.24 Notify SM that LCO for single chiller operation may be exited. TH

8.2.25 CMG remove Temporary DP cell from test taps on PI 210.1-39R and PI 210.1-41R, CW Circulating Pump #12 Pump Suction and Discharge Pressure Gauges. DB
CMG
TH
*Ind. Verif.

8.2.26 Complete Section 10.1.2, Acceptance Criteria for Chilled Water Train 12 testing TH

8.3 Stroke Test of BV 210.1-01 and BV 210.1-02, Cooling Coil 11 and 12 Inlet BVs

NOTE: Valves BV 210.1-01 and BV 210.1-02 are controlled by a common hand switch RMS 210.1-15, located on Panel N. When one valve is open the other is closed.

8.3.1 Record initial positions of 210.1-01, Cooling Coil 11 Block Valve and 210.1-02, Cooling Coil 12 Block Valve.

a. 210.1-01, COOLING COIL 11 BLOCK VALVE: Open TH

b. 210.1-02, COOLING COIL 12 BLOCK VALVE: Closed TH

(T) 8.3.2 Using common control switch for 210.1-01, Cooling Coil 11 Block Valve and 210.1-02, Cooling Coil 12 Block Valve, AND calibrated stopwatch, cycle 210.1-01 and 210.1-02 as required to record Close to Open valve stroke times:

- 210.1-01 CLOSE to OPEN STROKE TIME: 3.0 secs
  (≥ 0.9 sec and ≤ 2.8 sec)
  {≥ 0.47 sec and ≤ 3.27 sec}
- 210.1-02 CLOSE to OPEN STROKE TIME: 2.78 secs
  (≥ 1.2 sec and ≤ 3.7 sec) TH
  {≥ 0.62 sec and ≤ 4.32 sec}

8.3.3 Verify 210.1-01, Cooling Coil 11 Block Valve, and 210.1-02, Cooling Coil 12 Block Valve, restored to initial positions recorded in Step 8.3.1 AND record final positions below:

- 210.1-01, COOLING COIL 11 BLOCK VALVE: Open TH
  SD
  Ind. Verif.
- 210.1-02, COOLING COIL 12 BLOCK VALVE: Closed TH
  SD
  Ind. Verif.

Initials

8.3.4 Complete Acceptance Criteria Section 10.1.3 for 210.1-01 and 210.1-02 testing. TH

8.4 Stroke Test of 210.1-56, Chill Water Supply to Control Room Coolers

8.4.1 Notify the SM to enter the applicable LCO for Control Room Air Treatment System out of service (Tech Spec 3.4.5). TH

8.4.2 Establish communications between the TCV and Control Room. TH

8.4.3 Record initial position of TCV 210.1-56 (local).

10 o'clock position TH

8.4.4 Hold in the close position, TCV-210.1-56 Control Switch until local indicator indicates closed. TH

NOTES:

1. When 210.1-56 indicates CLOSED, the cooling coils are bypassed. When 210.1-56 indicates OPEN, the cooling coils are in use.

2. When 210.1-56C selector switch (mounted locally at the chillers) is positioned from ON to OFF, the valve fails from the CLOSED position to the OPEN position.

(IST) 8.4.5 Place in OFF, 210.1-56C, selector switch for 210.1-56, AND record 210.1-56 close to open stroke time.

210.1-56 CLOSE to OPEN: 38 sec TH
(≥ 24.5 sec and ≤ 40.8 sec)
{≥ 16.35 sec and ≤ 49.05 sec}

8.4.6 Place in ON, 210.1-56C, selector switch for 210.1-56. TH

SD
Ind. Verif.

8.4.7 Verify TCV 210.1-56 remains full open. TH

8.4.8 Return TCV 210.1-56 to initial position recorded above. TH

8.4.9 Notify the SM that LCO may be exited. TH

8.4.10 Complete Acceptance Criteria Section 10.1.4 for 210.1-56 testing. TH

Initials

9.0 RETURN TO NORMAL

9.1 CMG remove temporary ultrasonic flowmeter installed on common Chilled Water Circulating Pump Suction Line. DB CMG

9.2 Notify the SM and CRO that the procedure is completed, and temporary alteration(s) used have been returned to normal. JA SM DS CRO

9.3 Verify all test personnel performing this procedure have initialed and signed Attachment 1, Test Personnel and Initial Log. TH

9.4 Verify that all independent verification steps have been completed. TH

9.5 Record stop time and date. TH

0900 / Today
Stop time Date

10.0 ACCEPTANCE CRITERIA

10.1 Operations Review

10.1.1 Chilled Water Train 11 test results meet IST Acceptance Criteria as follows:

a. Train 11 Valve Test Results

COMPONENT	TEST DIRECTION	STROKE TIME	ACCEPTANCE CRITERIA**	TEST RESULTS
210.1-34	FORWARD (8.1.11)	N/A	≥ 158.36 gpm	(__) SAT (__) UNSAT
210.1-35	REVERSE (8.1.5)	N/A	LITTLE OR NO BACK LEAKAGE	(__) SAT (__) UNSAT
70-25	CLOSED TO OPEN *	____sec (8.1.22)	(≥ 9.6 sec and ≤ 16.1 sec) {≥ 6.5 sec and ≤ 19.33 sec}	(__) SAT (__) UNSAT

* Acceptance Valve exercising in the direction indicated verifies acceptable Fail-Safe Testing.

** If any stroke time exceeds the IST stroke time/acceptance limit ( ) and is within the Limiting Stroke Time {LS}, the valve may be stroked a second time per section 4.7.6. If after a second stroke, the time exceeds the IST stroke time/acceptance limit ( ), then declare the valve INOPERABLE. Initiate a CR and notify IST for any valve, which required a second stroke.

10.1.1 (Cont)

b. CW Circulating Pump 11 Test Results

	TEST PARAMETER	MEASURED VALUE	ACCEPT RANGE	ALERT RANGE	REQUIRED ACTION RANGE	RESULTS ACC or AL* or R/A**
(UFSAR)	Initial Inlet Pressure (psig)	_____ (8.1.3)	≥ 2.27	N/A	< 2.27	(__) ACC (__) R/A**
(UFSAR)	Running Inlet Pressure (psig)	_____ (8.1.12a)	≥ 2.27	N/A	< 2.27	(__) ACC (__) R/A**
(UFSAR)	D/P (psid)	_____ (8.1.12b)	≥ 17.190 to ≤ 21.010	HIGH N/A LOW N/A	HIGH > 21.010 LOW < 17.190	(__) ACC (__) A/L* (__) R/A**
(UFSAR)	Pump Flowrate (gpm)	_____ (8.1.11)	≥ 158.36 to ≤ 165	N/A	N/A	(__) ACC (__) R/A**
	Vibration Point 1H	_____ (8.1.13)	≤ 0.153	> 0.153 to ≤ 0.366	> 0.366	(__) ACC (__) AL* (__) R/A**
	Vibration Point 1V	_____ (8.1.13)	≤ 0.065	> 0.065 to ≤ 0.156	> 0.156	(__) ACC (__) AL* (__) R/A**
	Vibration Point 2H	_____ (8.1.13)	≤ 0.093	> 0.093 to ≤ 0.222	> 0.222	(__) ACC (__) AL* (__) R/A**
	Vibration Point 2V	_____ (8.1.13)	≤ 0.105	> 0.105 to ≤ 0.252	> 0.252	(__) ACC (__) AL* (__) R/A**

* Pump test results which fall into the Alert Range (AL) requires that the test frequency be doubled until the cause is determined and condition corrected. Subsequently inform the Condition Monitoring Group (CMG) of the pump condition. Alert Range test results are considered satisfactory for continued operation.

** Pump test results which fall into the Required Action Range (R/A) shall be the basis for declaring the pump immediately inoperable. Contact the Condition Monitoring Group (CMG) of the inoperable pump.

10.1.2 Chilled Water Train 12 test results meet IST acceptance criteria as follows:

a. Train 12 Valve Test Results

COMPONENT	TEST DIRECTION	STROKE TIME	ACCEPTANCE CRITERIA **	TEST RESULTS
210.1-35	FORWARD (8.2.11)	N/A	≥ 158.00 gpm	(__) SAT (__) UNSAT
210.1-34	REVERSE (8.2.5)	N/A	LITTLE OR NO BACK LEAKAGE	(__) SAT (__) UNSAT
70-26	CLOSED TO OPEN *	_____sec (8.2.22)	(≥ 9.9 sec and ≤ 16.5 sec) {≥ 6.7 sec and ≤ 19.8 sec}	(__) SAT (__) UNSAT

* Acceptance Valve exercising in the direction indicated verifies acceptable Fail-Safe Testing.

** If any stroke time exceeds the IST stroke time/acceptance limit ( ) and is within the Limiting Stroke Time {LS}, the valve may be stroked a second time per section 4.7.6. If after a second stroke, the time exceeds the IST stroke time/acceptance limit ( ), then declare the valve INOPERABLE. Initiate a CR and notify IST for any valve, which required a second stroke.

10.1.2 (Cont)

b. CW Circulating Pump 12 Test Results

	TEST PARAMETER	MEASURED VALUE	ACCEPT RANGE	ALERT RANGE	REQUIRED ACTION RANGE	RESULTS ACC or AL* or R/A**
(UFSAR)	Initial Inlet Pressure (psig)	_____ (8.2.3)	≥ 2.27	N/A	< 2.27	(__) ACC (__) R/A**
(UFSAR)	Running Inlet Pressure (psig)	_____ (8.2.12a)	≥ 2.27	N/A	< 2.27	(__) ACC (__) R/A**
(UFSAR)	D/P (psid)	_____ (8.2.12b)	≥ 17.775 to ≤ 21.725	HIGH N/A LOW N/A	HIGH > 21.725 LOW < 17.775	(__) ACC (__) AL* (__) R/A**
(UFSAR)	Pump Flowrate (gpm)	_____ (8.2.11)	≥ 158 to ≤ 164	N/A	N/A	(__) ACC (__) R/A**
	Vibration Point 1H	_____ (8.2.13)	≤ 0.145	> 0.145 to ≤ 0.348	> 0.348	(__) ACC (__) AL* (__) R/A**
	Vibration Point 1V	_____ (8.2.13)	≤ 0.133	> 0.133 to ≤ 0.318	> 0.318	(__) ACC (__) AL* (__) R/A**
	Vibration Point 2H	_____ (8.2.13)	≤ 0.118	> 0.118 to ≤ 0.282	> 0.282	(__) ACC (__) AL* (__) R/A**
	Vibration Point 2V	_____ (8.2.13)	≤ 0.105	> 0.105 to ≤ 0.252	> 0.252	(__) ACC (__) AL* (__) R/A**

* Pump test results which fall into the Alert Range (AL) requires that the test frequency be doubled until the cause is determined and condition corrected. Subsequently inform the Condition Monitoring Group (CMG) of the pump condition. Alert Range test results are considered satisfactory for continued operation.

** Pump test results which fall into the Required Action Range (R/A) shall be the basis for declaring the pump immediately inoperable. Contact the Condition Monitoring Group (CMG) of the inoperable pump.

10.1.3 BV 210.1-01 and BV 210.1-02, Cooling Coil 11 and 12 Inlet BVs test results meet IST Acceptance Criteria as follows:

Valve Test Results

COMPONENT	TEST DIRECTION	STROKE TIME	ACCEPTANCE CRITERIA**	TEST RESULTS
210.1-01	CLOSED TO OPEN *	_____sec (8.3.2)	(≥ 0.9 sec and ≤ 2.8 sec) {≥ 0.47 sec and ≤ 3.27 sec}	(__) SAT (__) UNSAT
210.1-02	CLOSED TO OPEN *	_____sec (8.3.2)	(≥ 1.2 sec and ≤ 3.7 sec) {≥ 0.62 sec and ≤ 4.32 sec}	(__) SAT (__) UNSAT

10.1.4 210.1-56, Chilled Water Supply to Control Room Coolers BV, test results meet IST Acceptance Criteria as follows:

Valve Test Results

COMPONENT	TEST DIRECTION	STROKE TIME	ACCEPTANCE CRITERIA **	TEST RESULTS
210.1-56	CLOSED TO OPEN *	_____sec (8.4.5)	(≥ 24.5 sec and ≤ 40.8 sec) {≥ 16.35 sec and ≤ 49.05 sec}	(__) SAT (__) UNSAT

* Acceptance Valve exercising in the direction indicated verifies acceptable Fail-Safe Testing.

** If any stroke time exceeds the IST stroke time/acceptance limit ( ) and is within the Limiting Stroke Time {LS}, the valve may be stroked a second time per section 4.7.6. If after a second stroke, the time exceeds the IST stroke time/acceptance limit ( ), then declare the valve INOPERABLE. Initiate a CR and notify IST for any valve, which required a second stroke.

10.1.5 All test documentation is completed. (__) YES (__) NO

_____ _____/_____

Completed by CRS/SM Date Time

10.1.6 SM Review

(__) Satisfactory, no corrective action required.

(__) Satisfactory, corrective action required. (Use Remarks Section as necessary and initiate an ACR.)

(__) Unsatisfactory, (Use Remarks Section as necessary, initiate an ACR and immediately Notify * Operations Manager, or Alternate).

For any component tested with this surveillance test that is declared inoperable in accordance with the Acceptance Criteria, perform the following as applicable:

- Enter it in the ESL.
- Enter any applicable Technical Specification LCOs.
- Make an entry in the SM Log.
- Place a Yellow Clearance Section tag on the component.
- Write an ACR.
- Inform IST/CMG (Engineering Programs).
- Notify Manager Operations or designee.
- Generate a CR.

_____
* Name of person Notified

Remarks: _____

_____

_____

_____

_____ _____ _____
Signature SM Date Time

10.2 IST Review

(__) Satisfactory, no corrective action required.

(__) Increased test frequency required (List equipment ID in Remarks.)

(__) Recommendations (explain in Remarks.)

Remarks: _____

_____

_____

_____

_____ _____ _____
Signature IST Date Time

10.3 Second Review

All test data reviewed AND all documentation completed.

_____ _____
STA/SRO Signature Date

ATTACHMENT 1: TEST PERSONNEL SIGNATURE AND INITIAL LOG

NOTE: Completing this attachment signifies that each person has reviewed the applicable portions of this procedure.

PRINTED NAME	SIGNATURE	INITIALS
Joe Andrews	JJ Andrews	JA
SM		
Don Shorter	Don Shorter	DS
CRO		
Tony Hall	[illegible]	TH
Stan Davis	Stan Davis	SD
Dave Brown	Dave Brown	DB
Roy Mason	Roy Mason	RM

ATTACHMENT 2: CHILLED WATER CIRCULATING PUMP SKETCH

EPN#: 210.137 (#11), 210.136 (#12)

LOCATION: Turbine Bldg.

ELEVATION: 300'

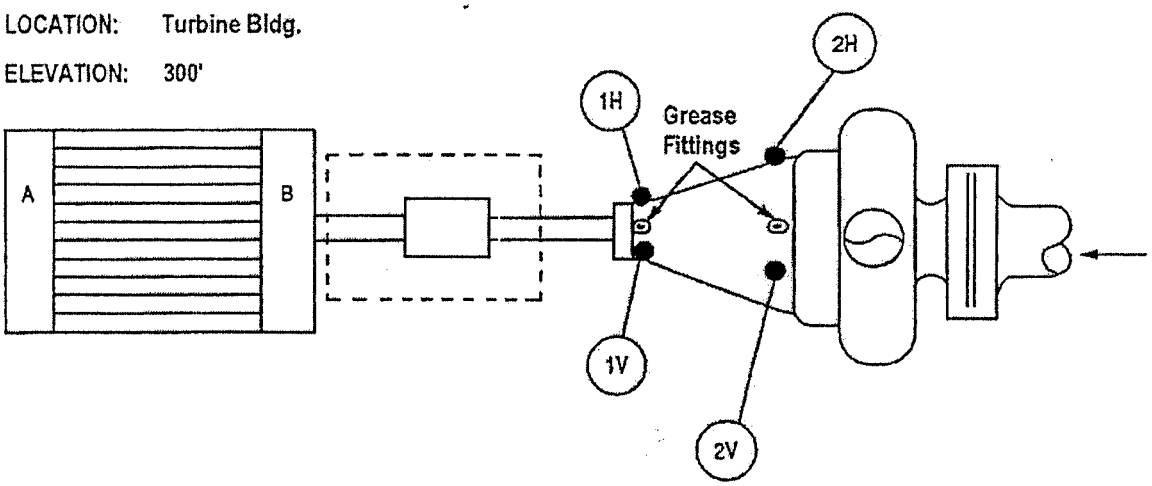

— Plan View —

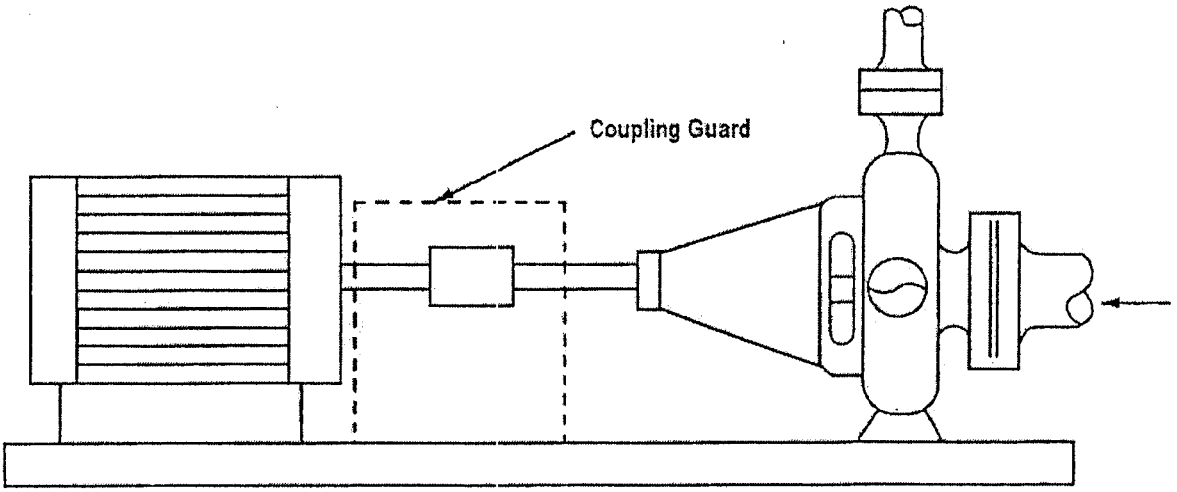

— Elevation View —

- = Monitoring points required by CMG

ATTACHMENT 3: CHILLED WATER CIRCULATING PUMP TEST FLOW DIAGRAM

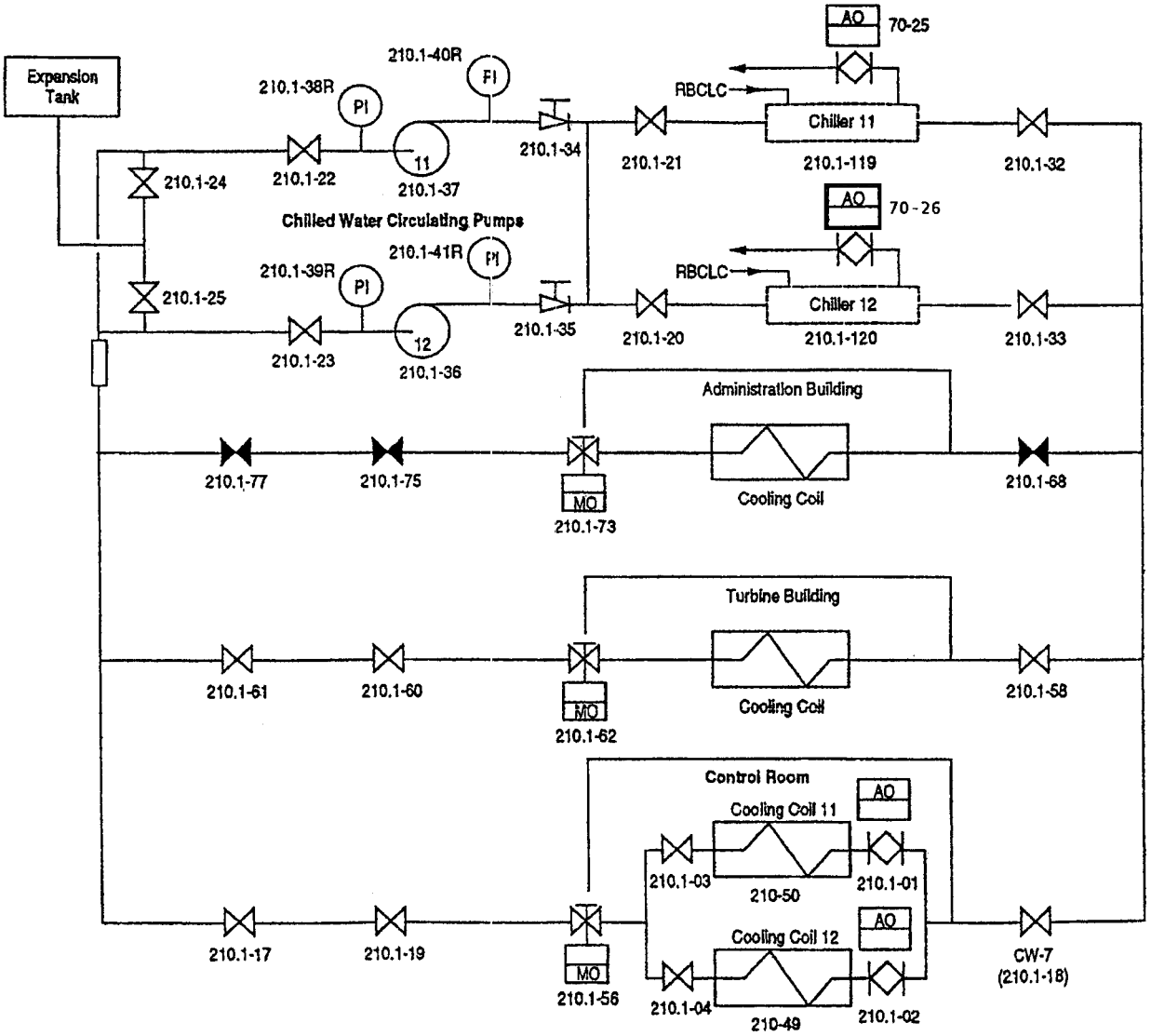

NRC JPM SRO RC
Constellation Energy Group
NINE MILE POINT UNIT 1
OPERATOR JOB PERFORMANCE MEASURE

Title: Determine Actions for Inoperable Service Water Radiation Monitor Revision: NRC 2008

Task Number: N/A

Approvals:

8/14/2008

General Supervisor Date
Operations Training (Designee)

N/A – Exam Security
General Supervisor Date
Operations (Designee)

N/A – Exam Security
Configuration Control Date

Performer:_____ (SRO)

Trainer/Evaluator:_____

Evaluation Method: Perform

Evaluation Location: Classroom

Expected Completion Time: 25 minutes Time Critical Task: No Alternate Path Task: No

Start Time: _____ Stop Time:_____ Completion Time:_____

JPM Overall Rating: Pass Fail

NOTE: A JPM overall rating of fail shall be given if any critical step is graded as fail. Any grade of unsat or individual competency area unsat requires a comment.

Comments:

Evaluator Signature:_____ Date:_____

Recommended Start Location: Classroom

Simulator Set-up: None

Directions to the Instructor/Evaluator: None

Directions to Operators:

Read Before Every JPM Performance:

For the performance of this JPM, I will function as the SM, CSO, and Auxiliary Operators. Prior to providing direction to perform this task, I will provide you with the initial conditions and answer any questions. During task performance, I will identify the steps to be simulated, or discuss and provide cues as necessary.

With the exception of accessing panels, NO plant equipment will be physically manipulated. Repositioning of devices will be simulated by discussion and acknowledged by my cues.

Read Before Each Evaluated JPM Performance:

This evaluated JPM is a measure of your ability to perform this task independently. The Control Room Supervisor has determined that a verifier is not available and that additional / concurrent verification will not be provided; therefore, it should not be requested.

Read Before Each Training JPM Performance:

During this Training JPM, the use of applicable methods of verification and checking are expected. Therefore, either another individual or I will act as the independent verifier or peer checker.

Notes to Instructor / Evaluator:

1. Critical steps are identified in grading areas **Pass/Fail**.
2. During Evaluated JPM:
   - Self checking shall be demonstrated.
3. During Training JPM:
   - Self checking shall be demonstrated.
   - Peer checking shall be demonstrated.

References:

1. ARP H1; H1-4-5.
2. ODCM 3.6.14.a and TBL 3.6.14-1 Inst. 1B.
3. DER NM-2003-5168, ODCM Entry Due to SW RM Low Flow.
4. DER NM-2004-976, Unplanned LCO – SW RM Low Flow.
5. K/A 2.3.11 (3.2) Ability to control radiation releases.

Tools and Equipment:

1. None

Task Standard: Determine actions per ARP H1-4-5 and ODCM in response to service water radiation monitor low flow condition.

Initial Conditions:
1. The plant is operating at 100% power.
2. High wind conditions (20-25 mph with higher gusts) are present and are expected to continue for the next twelve (12) hours.
3. H1-4-5, LQ PROCESS RAD MON, has alarmed.
4. Computer Point F172, SERVICE WATER SKID FAILURE, is in alarm.
5. Operator reports an EQUIP FAIL Light is shown for the Service Water Discharge Monitor at the J Panel.
6. Chemistry reports alarm is caused by low sample flow. Flows are reading 0.98 gpm on the east side (TB) and 0.99 gpm on the west side (RB).
7. Sample flow cannot be adjusted.
8. Ask the operator for any questions.

Initiating cue:

"(Operator's name), determine the appropriate actions and compensatory measures in response to ARP H1-4-5. Record your findings on the provided attachment."

EXAMINER NOTE: Provide Attachment 2.

Performance Steps	*Standard*	*Grade*
1. Provide repeat back of initiating cue. *Evaluator Acknowledge repeat back providing correction if necessary*	Proper communications used for repeat back (GAP-OPS-O1)	Sat/Unsat
RECORD START TIME _____		
1. Obtain a copy of the reference procedure and review/utilize the correct section.	ARP H1-4-5 obtained. Operator Actions referenced. ODCM obtained. DLCO 3.6.14 referenced. Table D 3.6.14-1 referenced.	Sat/Unsat
2. Per ARP H1-4-5, if service water monitor alarm, and monitor EQUIP FAIL light is lit, then:		
a. Notify Radiation Protection Instrument Support for repair.	Notifies Radiation Protection Instrument Support to initiate repairs.	Sat/Unsat
b. Initiate LCO sampling (Chemistry).	Directs Chemistry to perform DLCO sampling per Table D 3.6.14-1 Instrument 1B action (d); twelve (12) hour grab samples to be collected/analyzed for SW effluent.	**Pass/Fail**
3. Reference ODCM and takes appropriate actions.	Determines SW Radiation Monitor is inoperable.	Sat/Unsat

Performance Steps	*Standard*	*Grade*
	References ODCM DLCO 3.6.14.a and Table D 3.6.14-1 Instrument 1B and note (d) applies.	Sat/Unsat
	Determines less than the minimum number of radioactive liquid effluent monitoring channels for service water effluent and takes action shown in Table D 3.6.14-1.	**Pass/Fail**
	Determines action (d) applies. Effluent releases via this pathway can continue provided that at least once per twelve (12) hours grab samples are collected and analyzed SW effluent.	**Pass/Fail**

TERMINATING CUE: Applicable actions per ARP H1-4-5 and ODCM in response to service water radiation monitor low flow condition have been identified and recorded.

RECORD STOP TIME_____

Initial Conditions:

1. The plant is operating at 100% power.
2. High wind conditions (20-25 mph with higher gusts) are present and are expected to continue for the next twelve (12) hours.
3. H1-4-5, LQ PROCESS RAD MON, has alarmed.
4. Computer Point F172, SERVICE WATER SKID FAILURE, is in alarm.
5. Operator reports an EQUIP FAIL Light is shown for the Service Water Discharge Monitor at the J Panel.
6. Chemistry reports alarm is caused by low sample flow. Flows are reading 0.98 gpm on the east side (TB) and 0.99 gpm on the west side (RB).
7. Sample flow cannot be adjusted.

Initiating cue:

"(Operator's name), determine the appropriate actions and compensatory measures in response to ARP H1-4-5. Record your findings on the provided attachment."

Attachment 1

ANSWER KEY

Determine the appropriate actions in response to these conditions.	
Action	Required By (Document)
Notify Radiation Protection Instrument Support for repair. Direct Chemistry to initiate required LCO sampling	ARP H1-4-5
Determines SW Radiation Monitor is inoperable. Determines less than the minimum number of radioactive liquid effluent monitoring channels for service water effluent and takes action shown in Table D 3.6.14-1.	ODCM DLCO 3.6.14 TABLE D 3.6.14-1.
Determines action identified in note (d) applies. Effluent releases via this pathway can continue provided that at least once per twelve (12) hours grab samples are collected and analyzed.	ODCM DLCO 3.6.14 TABLE NOTE (d)

Attachment 2

JPM Scorecard For Applicant Use

Determine the appropriate actions in response to these conditions.	
Action	Required By (Document)

PANEL: H1 ANNUNCIATOR: 4-5

	1	2	3	4	5	6	7	8
1								
2								
3								
4					■			

LQ PROCESS
RAD MON

Computer Printout:

F163 SVC WTR HI RAD RX BLDG_____YES
F164 SVC WTR HI RAD TURB BLDG_____YES
F165 SVC WTR VALVE POS FAIL_____YES
F172 SVC WTR SKID FAILURE_____YES
E474 RB CLC RMON 11_____CPS
E473 RADWST DIS RMON 11_____CPS
F320 RADWST DIS RMON 12_____CPS

Device - Setpoint:

NOTE: See monitors for current setpoints.

Operator Actions:

1. Confirm alarm on computer printout.
2. Confirm alarm condition at Rad Monitors on J Panel
3. IF Service Water Monitor "HIGH" OR RBCLC "UPSCALE HI-HI",
   THEN enter EPIP-EPP-21, AND execute concurrently.
4. IF Service Water monitor alarm,
   THEN perform the following:
   a. For "ALERT" or "HIGH", confirm source of activity is Rx. Bldg. or Turb. Bldg. Service Water Hdr.
   b. Request Chemistry to sample discharge canal and Service Water to locate source of activity.
   c. IF alarm is F165 SVC WTR VALVE POS FAIL,
      THEN confirm position of sampling valves 72-397 (Computer Input Pt. F148) and 72-398 (Pt. F149).
   d. IF monitor "EQUIP FAIL" light is lit,
      THEN notify Rad Protection Instrument Support for repair AND initiate LCO sampling (Chemistry).
5. IF RBCLC monitor alarm,
   THEN perform the following:
   a. Monitor RBCLC pressure, temperature, make-up tank to determine source of leak and isolate as required (Recirc Pump seal, Radwaste, SDC, RWCU, etc.)
   b. IF "UPSCALE HIGH" or "UPSCALE HI-HI",
      THEN notify Chemistry to sample RBCLC as required to locate source of activity.
   c. Control activity by Feed and Bleed in accordance with N1-OP-11, Section H, Feed And Bleed Procedure For Controlling RBCLC Activity.
   d. IF monitor INOP/DOWNSCALE,
      THEN notify Rad Protection Instrument Support.

Operator Actions continued

Operator Actions (Cont)

6. IF Liquid Radwaste Discharge monitor alarm,
   THEN perform the following:
   a. Request Radwaste Operator to stop batch discharge (if) in progress.
   b. Confirm Alarm potentiometer settings are correct for batch being pumped.
   c. Request Chemistry determine if verification analysis is required or whether discharge may continue.
   d. IF alarm sounds during period of no pump out,
      THEN request Radwaste verify that monitor/detector is flushed with Demin Water.
   e. IF monitor INOP/Downscale,
      THEN notify Rad Protection Instrument Support.

Possible Causes:

1. Radioactive cooling loads leaking into RBCLC or Service Water.
2. Malfunctioning Rad Monitor.
3. Service Water skid/valves power supply failure.
4. Rad Monitor element has "Hot Particle" requiring flushing.

References:

1. ODCM D 3.6.14 & 15
2. N1-OP-50B
3. N1-OP-11
4. N1-EOP-6
5. N1-EPP-1
6. P&ID: C-18022-C, Sh. 1, 2
   C-18045-C, Sh. 10
7. Electrical: C-22025-C, Sh. 3
   C-39640-C
   C-34857-C, Sh. 1
   F-40212-C
   C-23146-C, Sh. 5

Alarm Contact:

F163___74A/C2 (11C2)
F164___74A/D2 (11D2)
F165___74A/E2 (11E2)
F172___74A/L2 (11L2)
E474___Z6K1 - (RN02B INOP)
Z6K2 - (RN02B Downscale)
Z6K3 - (RN02B High)
E473___Z5K2 - (RN02A Dwnscl)
Z7K1 - (RN02A INOP)
Z5K1 - (RN02A High)
F320___Z5K4 - (RN02D Dwnscl)
Z7K2 - (RN02D INOP)
Z5K3 - (RN02D High)

CONTROLS

DLCO 3.6.14 RADIOACTIVE EFFLUENT INSTRUMENTATION

Applicability:

Applies to the functionality of plant instrumentation that monitors plant effluents.

Objective:

To assure the functionality of instrumentation to monitor the release of radioactive plant effluents.

Specification:

a. Liquid Effluent

The radioactive liquid effluent monitoring instrumentation channels shown in Table D 3.6.14-1 shall be functional with their alarm setpoints set to ensure that the limits of Control DLCO 3.6.15.a.1 are not exceeded. The alarm setpoints of these channels shall be determined and adjusted in accordance with the methodology and parameters in Part II.

With a radioactive liquid effluent monitoring instrumentation channel alarm setpoint less conservative than a value which will ensure that the limits of DLCO 3.6.15.a.1 are met, immediately suspend the release of radioactive liquid effluents monitored by the affected channel, or declare the channel nonfunctional, or change the setpoint so it is acceptably conservative.

SURVEILLANCE REQUIREMENT

DSR 4.6.14 RADIOACTIVE EFFLUENT INSTRUMENTATION

Applicability:

Applies to the surveillance of instrumentation that monitors plant effluents.

Objective:
To verify operation of monitoring instrumentation.

Specification:

a. Liquid Effluent

Each radioactive liquid effluent monitoring instrumentation channel shall be demonstrated functional by performance of the sensor check, source check, instrument channel calibration and channel test operations at the frequencies shown in Table D 4.6.14-1.

Records – Auditable records shall be maintained, in accordance with procedures in Part II, of all radioactive liquid effluent monitoring instrumentation alarm setpoints. Setpoints and setpoint calculations shall be available for review to ensure that the limits of Control DLCO 3.6.15.a.1 are met.

CONTROLS	SURVEILLANCE REQUIREMENT
With less than the minimum number of radioactive liquid effluent monitoring instrumentation channels functional, take the action shown in Table D 3.6.14-1. Restore the instruments to functional status within 30 days, or outline in the next Radioactive Effluent Release Report the cause of the nonfunctionality and how the instruments were or will be restored to functional status.	

TABLE D 3.6.14-1
RADIOACTIVE LIQUID EFFLUENT MONITORING INSTRUMENTATION

Instrument	Minimum Channels Functional	Applicability
1. Gross Radioactivity Monitors[a]		
A. Liquid Radwaste Effluent Line	1[c]	At all times[b]
B. Service Water System Effluent Line	1[d]	At all times[i]
2. Flow Rate Measurement Devices		
A. Liquid Radwaste Effluent Line	1[e]	At all times
B. Discharge Canal	**	**
3. Tank Level Indicating Devices[g]		
A. Outside Liquid Radwaste Storage Tanks	1[f]	At all times

**Pumps curves or rated capacity will be utilized to estimate flow.

NOTES FOR TABLE D 3.6.14-1

(a) Provide alarm, but do not provide automatic termination of release.

(b) An operator shall be present in the Radwaste Control Room at all times during a release.

(c) With the number of channels functional less than required by the minimum channels functional requirement, effluent releases may continue provided that prior to initiating a release:

1. At least two independent samples are analyzed in accordance with Specification DSR 4.6.15.a, and

2. At least two technically qualified members of the Facility Staff independently verify the release rate calculations and discharge line valving.

Otherwise suspend release of radioactive effluents via this pathway.

(d) With the number of channels functional less than required by the minimum channels functional requirement, effluent releases via this pathway may continue provided that, at least once per 12 hours, grab samples are collected and analyzed for gamma radioactivity at a lower limit of detection of at least $5x10^{-7}$ microcurie/ml.

(e) During discharge, with the number of channels functional less than required by the minimum channels functional requirement, effluent releases via this pathway may continue provided the flow rate is estimated at least once per 4 hours during actual releases.

(f) With the number of channels functional less than required by the minimum channels functional requirement, liquid additions to this tank may continue provided the tank liquid level is estimated during liquid additions to the tank.

(g) Tanks included in this specification are those outdoor tanks that are not surrounded by liners, dikes or walls capable of holding the tank contents.

(h) Deleted.

(i) Monitoring will be conducted continuously by alternately sampling the reactor building and turbine building service water return lines for approximately 15-minute intervals.

TABLE D 4.6.14-1
RADIOACTIVE LIQUID EFFLUENT MONITORING INSTRUMENTATION
Surveillance Requirement

Instrument	Sensor Check	Source Check[f]	Channel Test	Channel Calibration
1. Gross Beta or Gamma Radioactivity Monitors				
a. Liquid Radwaste Effluent Line	Once/day*	Once/discharge*	Once/3 months[a]*	Once/year[b]*
b. Service Water Effluent Line	Once/day	Once/92 days	Once/184 days[a]	Once/24 months[b]
2. Flow Rate Measurement Devices				
a. Liquid Radwaste Effluent Line	Once/day[c]	None	None	Once/24 months*
b. Discharge Canal[d]	None	None	None	Once/year
3. Tank Level Indicating Devices[e]				
a. Outside Liquid Radwaste Storage Tanks	Once/day**	None	Once/3 months	Once/18 months

* Required prior to removal of blank flange in discharge line and until blank flange is replaced.
** During liquid addition to the tank.

NOTES FOR TABLE D 4.6.14-1

(a) The channel test shall also demonstrate that control room alarm annunciation occurs if any of the following conditions exist:

1. Instrumentation indicates measured levels above the alarm setpoint.
2. Instrument indicates a downscale failure.
3. Instrument controls not set in operate mode.

(b) The channel calibration shall be performed using one or more reference standards certified by the National Institute of Standards and Technology (NIST), or using standards that are traceable to the NIST or using actual samples of liquid waste that have been analyzed on a system that has been calibrated with NIST traceable sources. These standards shall permit calibrating the system over its intended range of energy and measurement.

(c) Sensor check shall consist of verifying indication of flow during periods of release. Sensor check shall be made at least once per 24 hours on days on which continuous, periodic or batch releases are made.

(d) Pump performance curves or rated data may be used to estimate flow.

(e) Tanks included in this specification are those outdoor tanks that are not surrounded by liners, dikes or walls capable of holding the tank contents.

(f) Source check may consist of an installed check source, response to an external source, or (for liquid radwaste monitors) verification within 30 minutes of commencing discharge of monitor response to effluent.

NRC JPM SRO EP
Constellation Energy Group
NINE MILE POINT UNIT 1
OPERATOR JOB PERFORMANCE MEASURE

Title: Emergency Event Classification, Notification and Reclassification Revision: NRC 2008

Task Number: N/A

Approvals:

8/14/2008

General Supervisor Operations Training (Designee) Date

N/A – Exam Security
General Supervisor Operations (Designee) Date

N/A – Exam Security
Configuration Control Date

Performer:_____ (SRO)

Trainer/Evaluator:_____

Evaluation Method: Perform

Evaluation Location: Classroom/Simulator

Expected Completion Time: 30 minutes Time Critical Task: Yes Alternate Path Task: No

Start Time: _____ Stop Time:_____ Completion Time:_____

JPM Overall Rating: Pass Fail

NOTE: A JPM overall rating of fail shall be given if any critical step is graded as fail. Any grade of unsat or individual competency area unsat requires a comment.

Comments:

Evaluator Signature:_____ Date:_____

Recommended Start Location: Classroom/Simulator

Simulator Set-up: None

Directions to the Instructor/Evaluator: None

Directions to Operators:

Read Before Every JPM Performance:

For the performance of this JPM, I will function as the Unit 2 SM, Security Supervisor, Communication Aid, and other personnel as necessary. Prior to providing direction to perform this task, I will provide you with the initial conditions and answer any questions. During task performance, I will identify the steps to be simulated, or discuss and provide cues as necessary.

Read Before Each Evaluated JPM Performance:

This evaluated JPM is a measure of your ability to perform this task independently. The Control Room Supervisor has determined that a verifier is not available and that additional / concurrent verification will not be provided; therefore it should not be requested.

Read Before Each Training JPM Performance:

During this Training JPM, applicable methods of verification are expected to be used. Therefore, either another individual or I will act as the additional / concurrent verifier.

Notes to Instructor / Evaluator:

1. Critical steps are identified as **Pass/Fail**.
2. During Evaluated JPM:
   - Self-verification shall be demonstrated.
3. During Training JPM:
   - Self-verification shall be demonstrated.
   - No other verification shall be demonstrated.

References:

1. EPIP-EPP-01, Classification Of Emergency Conditions at Unit 1
2. EPIP-EPP-18, Attachment 1 SM/ED Checklist
3. EPIP-EPP-20, Emergency Notifications
4. EPMP-EPP-0101
5. K/A 2.4.29(4.0), Knowledge of the Emergency Plan.

Tools and Equipment:

1.0 EPIP-EPP-01, ATTACHMENT 1, UNIT 1 EAL FLOWCHART

2.0 SM/ED Checklist Package

Task Standard:

Classify and declare the emergency event within 15 minutes of the time that indications are available to the Candidate that an EAL has been exceeded. Make notifications to New York State and Oswego County within 15 minutes of the time the event is declared.

Initial Conditions:

1. You are the Unit 1 Shift Manager.
2. Unit 1 is operating at 100% power.
3. Unit 2 is operating at 100% power.
4. The following conditions exist:
   - An Earthquake has just hit the site
   - Unit 2 reports seismic instrumentation reads 0.050g
   - NAO reports structural steel has fallen and damaged Power Board 16B
5. Ask the operator for any questions.

Initiating Cue:

> "(Operator's name), based on the above conditions, determine the event classification per EPIP-EPP-01 and complete steps 1 through 7.b of EPIP-EPP-18, Attachment 1, SM/ED Checklist. This is a time critical task."

Examiner Note: After this event is classified, declared and the notifications initiated, the plant conditions will change as stated below and a reclassification will be required.

Initial Conditions #2:

1. The reactor has been scrammed due to rising drywell pressure.
2. Drywell pressure is 4.0 psig and slowly rising.
3. A Loss of Offsite Power has occurred and both EDGs are supplying their emergency buses.
4. The Security Supervisor notified the Control Room that an individual has entered the Reactor Building with intent to commit sabotage.

Initiating Cue:

> "(Operator's name), based upon the above changes in plant conditions, determine any change in the emergency declaration level. This is a time critical task."

Performance Steps	*Standard*	*Grade*
1. Provide repeat back of initiating cue. *Evaluator Acknowledge repeat back providing correction if necessary*	Proper communications used for repeat back (GAP-OPS-O1)	Sat/Unsat
RECORD START TIME _____		
2. Obtain a copy of EPIP-EPP-01 attachment 1 and Shift Manager emergency paperwork and review/utilize the correct section.	EPIP-EPP-01 attachment 1 and Shift Manager emergency paperwork is obtained.	Sat/Unsat
3. Enters EPIP-EPP-18, Attachment 1, SM/ED Checklist and completes Steps 1 through 7.b.	Completes steps 1 thru 7b of EPIP-EPP-18, as described in subsequent JPM steps.	Sat/Unsat
4. Classifies and declares the emergency.	Declares an Alert within fifteen minutes of the JPM initial condition sheet being accepted in accordance with EAL 8.4.6. **EXAMINER NOTE: Time difference below must be 15 minutes or less:** JPM start time: _____ Time of Declaration: _____	**Pass/Fail**
5. Completes EPIP-EPP-18 attachment 1, figure 1 flowchart to determine evacuation and accountability requirements. **Note:** Evacuation determination is subjective and may or may not be performed. This will determine which path is taken on EPIP-EPP-18 Attachment 1 and which steps are completed on EPIP-EPP-18 Attachment 2.	Completes Attachment as shown in KEY	Sat/Unsat
6. Completes EPIP-EPP-18 attachment 2, Emergency Announcement.	Completes Attachment as shown in KEY	Sat/Unsat

Performance Steps	*Standard*	*Grade*
7. Completes EPIP-EPP-20 Part 1 Notification Fact Sheet. **Cue:** If asked about the status of Unit 2, cue that Unit 2 is still operating at 100% power and meets EAL 8.4.1 (UE) due to the earthquake.	Completes Attachment as shown in KEY **Part 1 Notification Fact Sheet Steps 3 thru 7 are Critical Steps** **EXAMINER NOTE: Time difference must be 15 minutes or less:** Time of Declaration (from JPM step 4): _____ Time EPIP-EPP-20 Part 1 Notification Fact Sheet is complete: _____	**Pass/Fail**
8. Completes EPIP-EPP-20 CAN Notification.	Completes Attachment as shown in KEY	Sat/Unsat
EXAMINER NOTE: Once EPIP-EPP-20 CAN Notification Form is completed, provide the applicant with Initial Conditions and Initiating Cue #2. **Cue:** If contacted as Security or state police for road access state that road access is normal. **Note:** This is also Time Critical.		
6. Reviews the given conditions and determines that an SAE declaration is required per EAL 8.1.7 or 8.1.8	Declares SAE within 15 minutes per EAL 8.1.7 or 8.1.8 **EXAMINER NOTE: Time difference below must be 15 minutes or less:** Time 2nd set of conditions was received: _____ Time of Declaration: _____	**Pass/Fail**

TERMINATING CUE: The event has been classified and re-classified and all appropriate notifications initiated.

RECORD STOP TIME_____

Initial Conditions:

1. You are the Unit 1 Shift Manager.
2. Unit 1 is operating at 100% power.
3. Unit 2 is operating at 100% power.
4. The following conditions exist:
    - An Earthquake has just hit the site
    - Unit 2 reports seismic instrumentation reads 0.050g
    - NAO reports structural steel has fallen and damaged Power Board 16B

Initiating Cue:

"(Operator's name), based on the above conditions, determine the event classification per EPIP-EPP-01 and complete steps 1 through 7.b of EPIP-EPP-18, Attachment 1, SM/ED Checklist. This is a time critical task."

Attachment 1: Meteorological Data

Wind Speed (30 ft)	5 mph
Wind Speed (200 ft)	10 mph
Wind Direction (30 ft)	60°
Wind Direction (200 ft)	60°
Stability Class	D

Initial Conditions #2:

1. The reactor has been scrammed due to rising drywell pressure.
2. Drywell Pressure is 4.0 psig and slowly rising.
3. A Loss of Offsite Power has occurred and both EDGs are supplying their emergency buses.
4. The Security Supervisor notified the Control Room that an individual has entered the Reactor Building with intent to commit sabotage.

Initiating Cue:

"(Operator's name), based upon the above changes in plant conditions, determine any change in the emergency declaration level. This is a time critical task."

KEY

ATTACHMENT 1: SM/ED CHECKLIST

Name: Name	Date: Date	Unit ☒ 1 ☐ 2

NOTES:
1. All steps should be performed.
2. Use N/A or N/R if appropriate.
3. A log documenting activities should be maintained.

		Completed			N/A	
		UE	Alert	SAE	GE	N/A
1.	This is a drill/this is an actual emergency (circle one)	☐	☒	☐	☐	☐
2.	Classify the emergency per EPIP-EPP-01 or EPIP-EPP-02 (within 15 minutes of indications available in control room)	☐	☒	☐	☐	☐
3.	Using Attachment 1, Figure 1 flowchart determine the appropriate evacuation and accountability	☐	☒	☐	☐	☐
4.	Announce to Control Room staff you are now assuming SM/ED position and duties, and you are now declaring (state emergency classification level), and provide reason for classification/declaration/upgrade	☐	☒	☐	☐	☐
	NOTE: IF: the announcement for a ground attack has been made as required by EPIP-EPP-10, THEN: DO NOT make further announcements until safety is assured, coordinate as necessary with security.					
5.	Direct the appropriate announcement to be made using Attachment 2 of this procedure	☐	☒	☐	☐	☐
	NOTE: If reclassifying and ERO has not been notified, repeat step 7.					
6.	Inform unaffected unit SM of forthcoming CAN notification fax and request Communications Aide call CAN in accordance with faxed attachment (only need to call out the ERO one time)	☐	☒	or higher		
7.	Complete the following in accordance with EPIP-EPP-20:					
	a. Part 1 Notification Fact Sheet (provide to Comm Aide) Include information from other unit as applicable	☐	☒	☐	☐	☐
	NOTE: Assure the safety of the ERO before making CAN Notifications. Consider directing ERO response to Alternate Emergency Duty Location.					
	b. CAN Notification Form 1) Fax completed form to unaffected unit Control Room, verify received (U1-2996, U2-1207)	☐	☒	or higher		
	c. NRC Notification Worksheets (provide to Comm Aide)	☐	☐	☐	☐	☐
	NOTE: For events affecting both units, direct other Unit SM to complete NRC notification worksheet and notify the NRC					
8.	Verify appropriate Site Emergency Procedures implementation per Attachment 8	☐	☐	☐	☐	☐
9.	Implement emergency exposure controls in accordance with EPIP-EPP-15 (Including issuing KI as required)	☐	☐	☐	☐	☐
10.	Implement Protective Actions as needed per EPIP-EPP-08, Attachment 1	CONTINUOUS				

KEY

KEY

ATTACHMENT 1: FIGURE 1

EVACUATION/ACCOUNTABILITY FLOWCHART

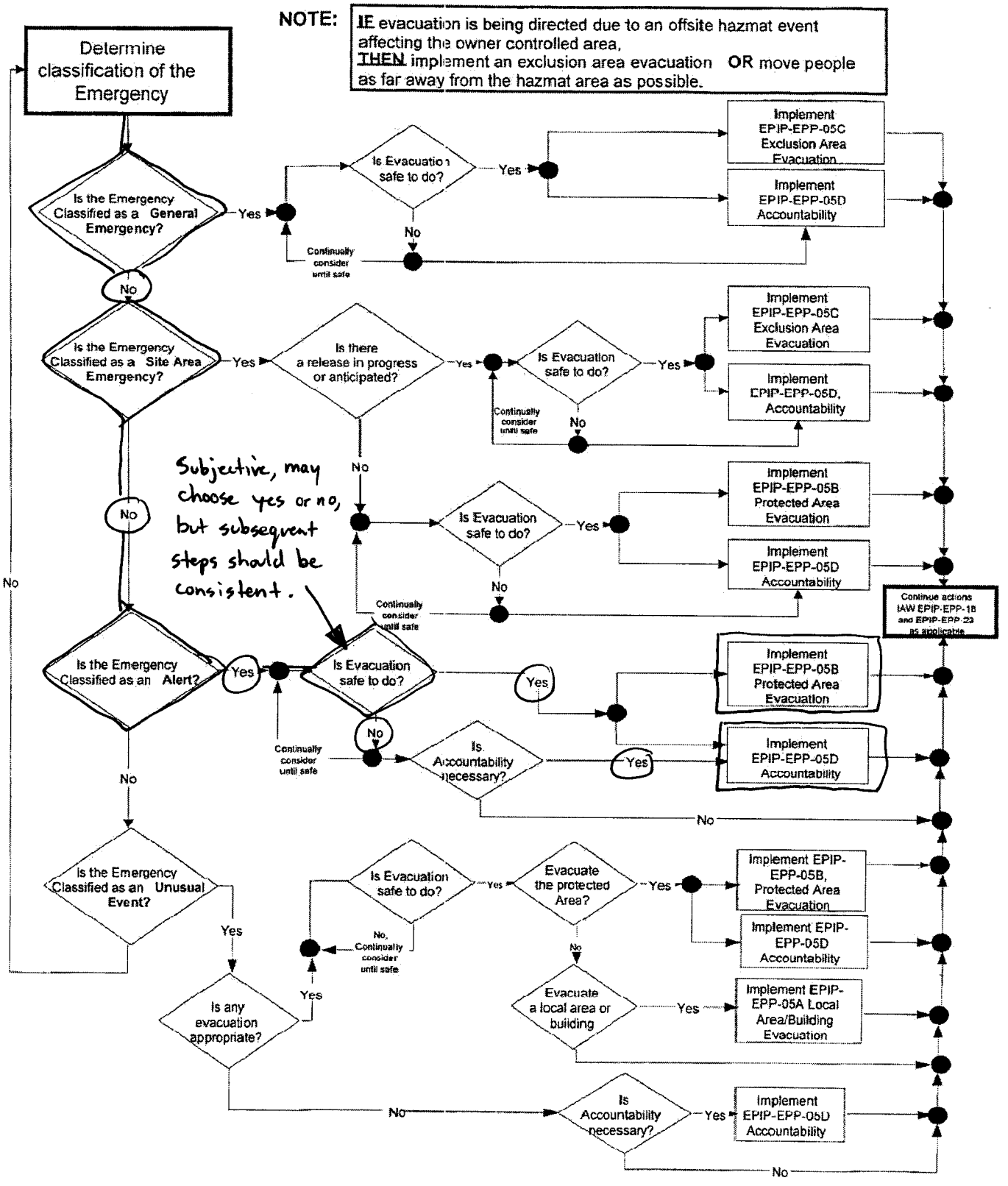

KEY

KEY

ATTACHMENT 2: EMERGENCY ANNOUNCEMENT

DATE: Date

TIME: Time

INSTRUCTIONS: (check boxes to select appropriate announcement, consider crossing out rows not used)

1. PLACE GAITRONICS IN MERGE.

2. SOUND THE APPROPRIATE ALARM:

☐ Station alarm for 10 seconds.
☒ Evacuation Alarm for 10 seconds. (When any evacuation is being ordered)

May switch if determined evacuation was not safe.

3. ANNOUNCE ONLY THOSE ITEMS CHECKED: (Provide short description of the reason for classification, not the whole EAL)

☒ a. *"Attention. Attention all personnel. This is* ☐ *a drill* ☒ *an actual emergency*

Nine Mile Point ☒ *Unit 1 is experiencing:* ☐ *Unit 2 is experiencing:*

"

☐ *"An Unusual Event due to* _____ "

☒ *"An Alert emergency condition due to* brief event description "

☐ *"A Site Area Emergency due to* _____ "

☐ *"A General Emergency due to* _____ "

☒ b. If this is the first announcement for an Alert or higher, then always add *"All Emergency Response Organization personnel are to report to their Emergency Response Facilities and card in."*

C3 4. FOR A CREDIBLE INSIDER SECURITY THREAT, ADD (Only do step 4 once)

☐ a. Secure all non-essential activities in vital areas, the two person line of sight vital area access rules are now in effect.

5. FOR A LOCAL AREA EVACUATION, ADD

☐ a. *"An evacuation of:* _____

is being ordered due to: _____

All personnel are to leave the (Unit 1/2) (area) staying clear of _____

and report to _____

May switch if determined evacuation was not safe.

6. FOR ACCOUNTABILITY WITHOUT EVACUATION, ADD (only use with 4 above or if evacuation unsafe and only do step 6 once.)

☐ a. *"Accountability is being performed in the Protected Area. All personnel shall report to an onsite assembly area, card in and remain in the area until further notice."*

7. FOR A PROTECTED AREA EVACUATION, ADD (Only do step 7 once)

☒ a. *"All personnel not assigned emergency response duties shall evacuate the Protected Area and report to the P-Building. and remain at this location until further notice"*

-----CONTINUED NEXT PAGE-----

KEY

KEY

ATTACHMENT 2 (Cont)

EMERGENCY ANNOUNCEMENT

8. FOR AN EXCLUSION AREA EVACUATION, ADD (Only do step 8 once)

☐ a. *"All personnel not assigned emergency response duties shall evacuate the Nine Mile Point Exclusion Area immediately and report to:"* (select appropriate)

☐ 1. *"Offsite Assembly Area located on Howard Road in Volney, Maps may be obtained from security as you exit."*

OR

☐ 2. _____ *(provide other location as appropriate)*

OR

☐ 3. *"Home"*

☐ b. IF NECESSARY ADD:
(If radioactive release is in progress, then obtain plume direction from Chem Tech and check appropriate box below)

☐ *Personnel are to leave the area heading west towards Oswego then turn south.*

☐ *Personnel are to leave the area heading south as soon as possible.*

☐ _____
(Detail other directions as appropriate)

Optional. May choose either.

9. IF APPROPRIATE, ADD: (Only do step 9 once)

☒ a. *"Personnel in protective clothing should"* (select appropriate):

☒ 1. *"Leave the area removing PCs as indicated at the step off pad."*

☐ 2. *"Leave the area immediately and obtain Radiation Protection assistance at the access control point.*

10. IF APPROPRIATE, ADD:

Optional → ☒ a. *"There is no eating, drinking, or smoking within the protected area until further notice."*

☐ b. *(Only done if "10a" has been done) Eating, drinking, smoking are now permitted within the Protected Area.*

11. ALWAYS ADD:

☐ *"I repeat this is a drill."*
☒ *"I repeat this is an actual emergency."*

12. Repeat the alarm and entire announcement so that all specified steps of the specific announcement are made 2 (two) times.

13. Leave GAltronics in merge mode for the duration of the event.

(C2) 14. Upon completion return this attachment to the EP Dept.

KEY

KEY

ATTACHMENT 1A: NINE MILE POINT NUCLEAR STATION
NOTIFICATION FACT SHEET - PART 1
(Do not say items in italics)

*Pick up the phone press A *, wait about 10 seconds, then say:*
"This is to report an incident at Nine Mile Point, standby for roll call:"

☐ State Emergency Communications Center (SECC)	☐ Oswego County Warning Point	☐ JA Fitzpatrick Power Plant (not req'd in 15 min)	☐ Unaffected NMP Unit (not req'd in 15 min)	**Notification #**

Step Changed	Step	
	1.	**This message is being transmitted on:** _____ (date) at _____ (time - 24 hr clock) via: **A.** RECS **B.** Other
	2.	**This is:** (A.) An actual emergency **B.** An Exercise
	3. ✱	**The Emergency Classification is:** **A.** Unusual Event **C.** Site Area Emergency **E.** Emergency Terminated (B.) Alert **D.** General Emergency **F.** Other: _____
	4. ✱	**This Emergency Classification was declared on:** Date (date) at Time of declaration (time - 24 hr clock)
	5. ✱	**Release of radioactive Materials due to the classified event:** (A.) No release **B.** Release below federal limits (ODCM), ☐ To atmosphere ☐ To Water **C.** Release above federal limits (ODCM), ☐ To atmosphere ☐ To Water **D.** Unmonitored release requiring evaluation.
	6. ✱	**The following Protective Actions are recommended to be implemented as soon as practical:** (A.) No need for protective actions outside the site boundary **B.** Evacuate and implement the KI Plan for the following ERPAs and all remaining ERPAs monitor the Emergency Alert System. 1 2 3 4 5 6 7 8 9 10 11 12 13 14 15 16 17 18 19 20 21 22 23 24 25 26 27 28 29 **C.** Shelter-in-place and implement the KI Plan for the following ERPAs AND all remaining ERPAs monitor the Emergency Alert System 1 2 3 4 5 6 7 8 9 10 11 12 13 14 15 16 17 18 19 20 21 22 23 24 25 26 27 28 29
	7. ✱	**UNIT** 1 **EAL #** 8.4.6; **UNIT** 2 **EAL #** ✱✱ 8.4.1; **Brief event description and other significant information:** (if necessary. Do not repeat EAL description) ✱✱✱
	8.	**Reactor Status:** Unit 1: (A.) Operating **B.** Shutdown _____ (date) at _____ (time - 24 hr clock) Unit 2: (A.) Operating **B.** Shutdown _____ (date) at _____ (time - 24 hr clock)
	9.	**A. Elevated wind speed** 10 miles/hr at 200 ft **B. Ground wind speed** 5 miles/hr at 30 ft.
	10.	**A. Elevated wind direction** (from) 60 degrees at 200 ft. **B. Ground wind direction** (from) 60 degrees at 30 ft.
	11.	**Stability Class:** A B C (D) E F G
	12.	**Reported by:** (Communicator name) _____ at Tel. No. (315) _____

ASK: **"Does Oswego County or New York State need further clarification on any information?"**
(provide as appropriate) *THEN:* **"This is the end of the message, standby for verification roll call."**

Check those involved in verification roll call	☐ State Emergency Communications Center	☐ Oswego County Warning Point	☐ JA Fitzpatrick Power Plant	☐ Unaffected NMP Unit

THEN STATE: **"Nine Mile Point out at time:** _____ " (time - 24 hr clock)

Approved by: (SM/ED or ED/RM):

Print name: Name Signature: Signature

KEY

✱ Critical steps
✱✱ Unit 2 EAL # not critical
✱✱✱ May add brief description, but not critical

KEY

ATTACHMENT 1A INSTRUCTIONS
COMPLETING THE NOTIFICATION FACT SHEET - PART 1

NOTE: 1. Complete all applicable sections.
2. **For all updates (all notifications except the initial) check the box or boxes that have changed from the last notification.**

BLOCK # INSTRUCTIONS

1. **Communications Aide** completes this row using date and time that number was dialed (A then *).
2. Indicate actual emergency or exercise (drill) by circling as appropriate.
3. Indicate by circling as appropriate the:
   A-D Classification Level, or
   E. If event is terminated, or
   F. Other
4. Indicate the date and time (24 hr clock / military time) the event was classified.
5. Indicate the status of any releases of radioactive materials by circling as appropriate, request Chemistry Technician provide release information then indicate:
   NOTE: (This section applies to a release of radioactive materials that took place DUE to the classified event. IF a radioactive material release is taking place and it is unknown if it is related to the event, THEN assume the release is the result of the event)
   A. No Release: Circle this selection if there is no release related to the declared event.
   B. Release below federally approved operating limits (ODCM) Circle this selection if a release is in progress due to the event AND the release rate has been determined (by any means available) to NOT exceed ODCM **[C1]** Indicate using check box if to water or to atmosphere.
   C. Release above federally approved operating limits (ODCM) Circle this selection if a release is in progress due to the event AND the release rate has been determined (by any means available) to exceed ODCM. **[C1]** Indicate using check box if to water or to atmosphere.
   D. Unmonitored release requiring evaluation: Circle this selection if evidence exists of a release from a pathway from which a release cannot be readily determined (examples: Emergency Condenser vents, steam or air passing blowout panels, Rx Bldg pressurized)
6. Indicate Protective Action Recommendations by circling as appropriate:
   A. No need for protective actions
   B. Evacuate (indicate appropriate ERPAs as recommended by Dose assessment Advisor/ODAM) and implement the KI Plan for the following ERPAs and Shelter all remaining ERPAs. Circle the appropriate ERPAs
7. Write the EAL # that the event was classified as, in the box provided for Item #7. If a site event, place the number nearest the Unit making the call. If each unit is declaring an emergency indicate the appropriate EAL next to the specific unit number. Under - Additional Information – see Notes below for examples/directions for information that should be provided:
   NOTES:
   - Do not repeat the EAL description here.
   - Provide other conditions if present that could have an effect on future classifications / event or termination prognosis
   - Put other EALs that amplify the present plant status, do not write in all applicable EALs, only those that may impact present conditions. Other units status may be indicated here.
   - If the EAL requires no additional explanation, the Additional Information section should be left blank.
8. Provide reactor status at both units. If unit is shutdown (per EOP definition), provide date and time of shutdown. Each unit status should be provided regardless of an emergency has been declared at the opposite unit or not.
   NOTES: 1. Meteorological Data to be recorded on the Part I Notification Fact Sheet is the 15 minute average data in accordance with EPIP-EPP-08.
   2. IF meteorological data is not available for the initial notification, then indicate LTR in that data field.
9. Obtain 15 minute average meteorological data from the Dose Assessment Advisor and record.
10. Obtain 15 minute average meteorological data from the Dose Assessment Advisor and record.
11. Obtain 15 minute average meteorological data from the Dose Assessment Advisor and record. (**Use elevated Stability class)**
12. **Communications Aide** completes this row listing name and the commercial telephone they use.
    THEN: Sign the Part 1 Notification Fact Sheet.
    AND: Provide to Communications Aide.

For termination of Unusual Events only,

1. Complete Part I - Notification Fact Sheet (Attachment 1A) through Line 4. Indicate date/time of termination on line 4 and:
   a. Sign where appropriate
   b. Provide to the Communications Aide

KEY

KEY

E. Rapid Notify

REQUIREMENTS FOR RAPID NOTIFY NOTIFICATION
Notification to RAPID NOTIFY and Pager Activation System should occur only when:
1. Directed by SM/ED/ or ED/RM for event notification
2. It is the first notification required for any Emergency Classification, OR
3. The Emergency Classification is upgraded from an Unusual Event Classification.
4. Per EOF Communications Coordinator Checklist.

1.0 CONTACT THE RAPID NOTIFY SYSTEM

A. Call RAPID NOTIFY System using one of the numbers listed below:
1. 8-1-(800) 552-4226 2. 8-1-(877)-786-8478

B. Provide Message: *"THIS IS TO REPORT AN INCIDENT AT NINE MILE POINT NUCLEAR STATION"* then wait for the operator to pull up Nine Mile Point's file.

C. When prompted by the RAPID NOTIFY Operator, provide information as requested, including:

- Your name
- Your position
- Your call-back number
  Unit 1: (315)349-2869, (315)349-1204
  Unit 2: (315)349-2171, (315)349-1884
  EOF: (315)593-5875
  Other: (write in number)
- Password (ONTARIO)

2.0 When prompted by RAPID NOTIFY Operator, provide message as completed by SM/ED

This should be read as (example: "A, This #1, is a drill")

A. This:
1. ☐ is a drill
2. ☒ is an actual emergency

Copy # checked here: 2 (used for step 4) **A**

B. Involving:
1. ☒ Nine Mile Point Unit 1
2. ☐ Nine Mile Point Unit 2
3. ☐ Both Units

May choose either, should be consistent with Part I step 7.

Copy # checked here: 1 or 3 (used for step 4) **B**

C. Responders: report to
1. ☐ No response is required
2. ☒ Response required to all ERFs
3. ☐ Response required to Alternate Emergency Duty Location
6. ☐ Staff TSC/OSC only
8. ☐ Precautionary staff ERFs

Copy # checked here: 2 (used for step 4) **C**

3.0 Verify Correct Code

A. When prompted by the RAPID NOTIFY Operator, repeat back the numerical code (as listed above):
B. Note time, date and person contacted:

Time:_____ Date:_____ Person Contacted:_____

C. Hang-up the phone.

4.0 MANUALLY ACTIVATE THE PAGER SYSTEM

Caution: *Performing the following steps will result in the notification of the ERO.*

A. Call Pager Activation System at 8-249-0092
B. When asked to enter the password, enter 1357.
C. When asked to enter your numeric message, and using the three number code indicated in step 2 above, enter: **(Be sure to include the 0s) (0)(0)(0) (2) (1or3) (2) THEN PRESS #**
A B C

D. Hang-up the phone
E. Inform the SM/ED that RAPID NOTIFY has been notified.

Message Approval: (SM/ED)(ED/RM) Signature Time Time

KEY