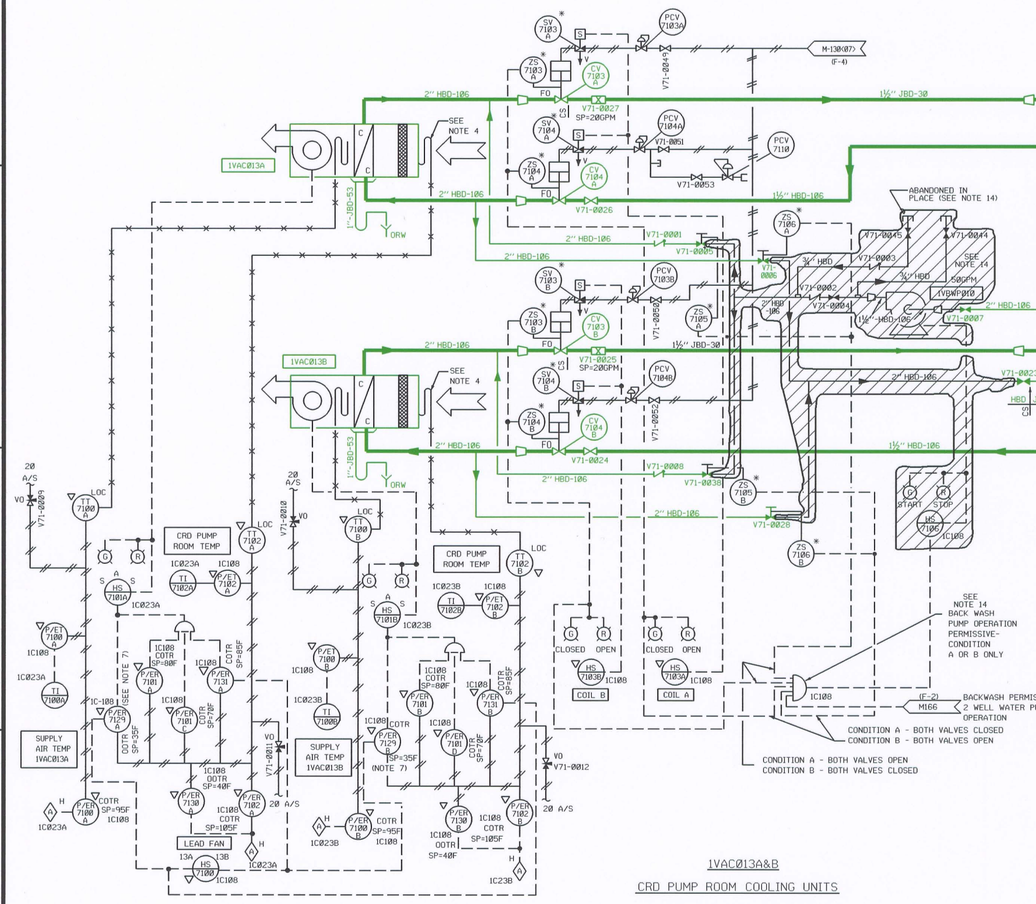

1VAC013A&B

CRD PUMP ROOM COOLING UNITS

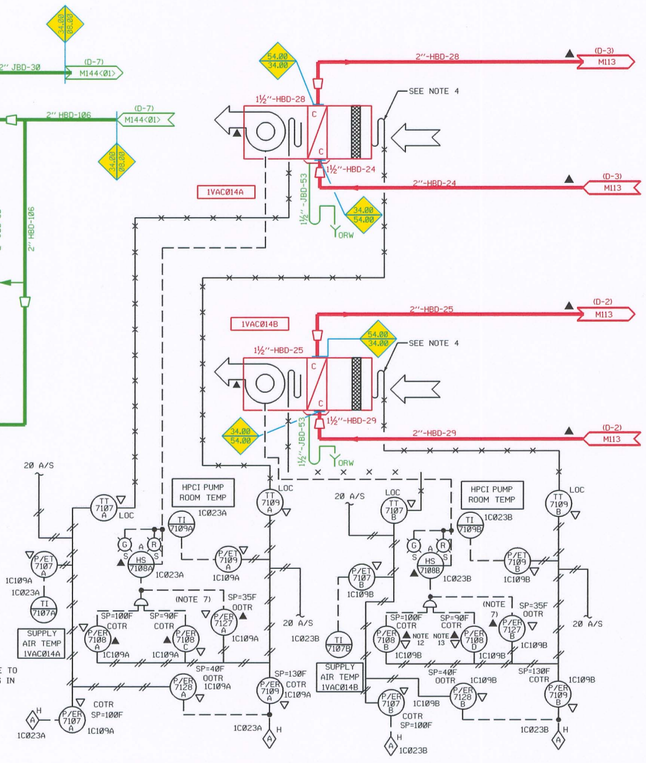

NOTES

1. HS = HANDSWITCH, SAS = START-AUTO-STOP
2. FOR SYMBOLS & ABBREVIATIONS NOT ON THIS SHEET SEE M179.

4. MOUNT AVERAGING SENSOR
5. ▲ SEISMIC CLASS I AND QA.
6. ▽ CONTROLS SUPPLIED BY HVAC INST. SUB-CONTRACTOR
7. FANS TO START ON (FAILURE OF) OR (LOW) AIR PRESSURE
8. ◇ SYMBOL DESIGNATES FIELD PURCHASED ITEMS
9. SEISMIC CLASS I UNITS SHALL HAVE SEISMIC CLASS I SUPPORT METHODS
10. TRAPS ON DRAINS FROM DRAIN PANS ON 1VAC013A & B, 1VAC014A & B, 1VAC015A & B, 1VAC010, 1VAC011, 1VAC017A & B SHALL HAVE 4" DEEP SEAL.
11. DRAIN TRAP ON 1VAC012 WAS REMOVED.
12. RESET FOR P/ER7122A & B IS BETWEEN 75°F AND 88°F.
13. P/ER7122C & D REMOVED ON EMA'S A57314 AND A13814G, RESPECTIVELY.
14. BACKWASH PUMP 1VBWP010, PIPING, VALVES AND ASSOCIATED CONTROLS HAVE BEEN ABANDONED IN PLACE.

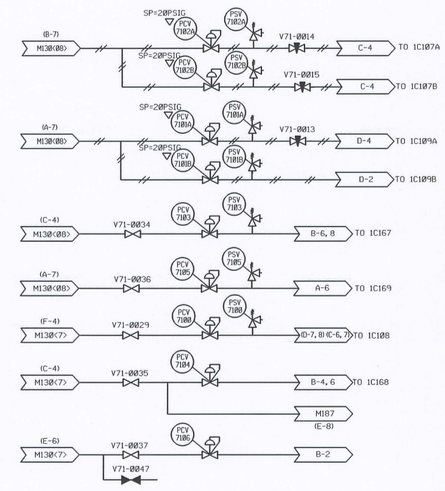

INSTRUMENT AIR

UNIT	PANEL	PIPING SUPPLY	PIPING RETURN	PANEL	TT-	TI-	P/ET-	P/ER-	HS-	P/ER-	P/ER-	TT-	P/ET-	TI-	P/ER-	P/ER-	COIL CONN	P/ER-	VALVE NOS.
1VAC014A ▲	1C109A ▲	2"-HBD-24	2"-HBD-28	1C023A	7107A				7108A ▲	7109A					7127A ▲	7128A	1½"	7108C ▲	V71-0013
1VAC014B ▲	1C109B ▲	2"-HBD-25	2"-HBD-29	1C023B	7107B				7108B ▲	7109B					7127B ▲	7128B	1½"	7108D ▲	——
1VAC015A ▲	1C107A ▲	2"-HBD-24	2"-HBD-28	1C023A	7121A				7122A ▲	7123A					7132A ▲	7133A	1"	NOTE 13	V71-0014
1VAC015B ▲	1C107B ▲	2"-HBD-25	2"-HBD-29	1C023B	7121B				7122B ▲	7123B					7132B ▲	7133B	1"	NOTE 13	V71-0015

ROOM COOLING UNITS

1VAC014 A&B SHOWN - HPCI ROOM (SHOWN)
1VAC015 A&B IN SCHEDULE - RCIC ROOM (TABLE)

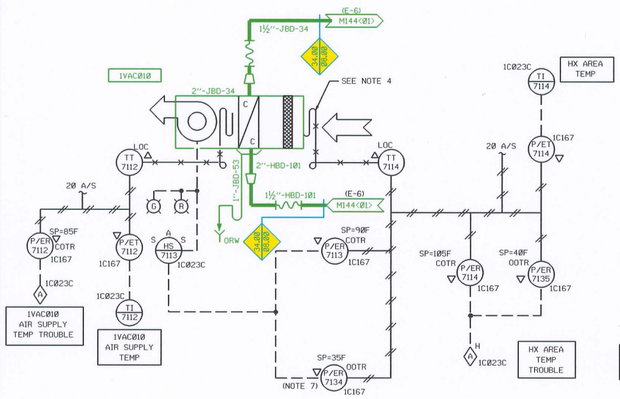

1VAC010

REACTOR BUILDING HEAT EXCHANGER AREA ROOM COOLING UNIT

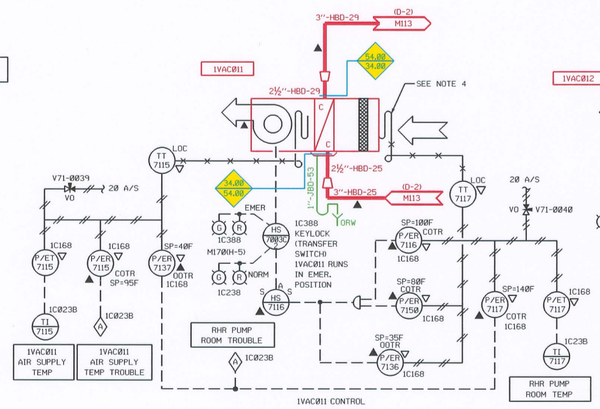

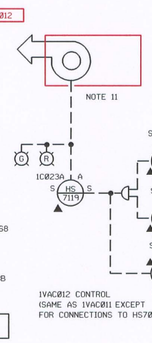

UNIT 1VAC	PANEL 1C023	PANEL 1C	P/ER	P/ET	TI—	TT—	HS—	P/ER	P/ER	P/ET	TI	TT	P/ER			PIPE SERVICE		REF DWG M113	VALVE NOS V71-		HS
11	B	168	7115				7116		7117				7136	7137	7150	25	29	(F-2)	0039	0040	7003C
12	A	169	7118				7119		7120				7138	7139	7151	24	28	(F-3&4)	0041	0042	—

1VAC011 & 012

RHR & CORE SPRAY PUMP ROOMS

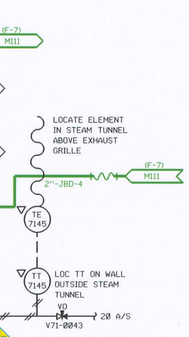

1VAC017A & B

STEAM TUNNEL COOLING UNIT

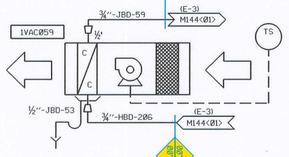

1VAC059

LCU ROOM COOLING UNIT

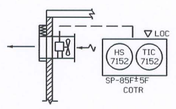

1VEF014

ELEV. MACHINE ROOM

D-090

LR NOTES:

1. ALL EXPOSED DRAIN PIPING AND FUNNELS ARE IN SCOPE FOR LICENSE RENEWAL.

LR LEGEND:

- COMPONENTS IN SCOPE PER 10CFR54.4(a)(1) AND/OR (a)(3) AND SUBJECT TO AMR PER 54.21
- COMPONENTS NOT SUBJECT TO AMR
- COMPONENTS IN SCOPE PER 10CFR54.4(a)(2) AND SUBJECT TO AMR PER 54.21
- SYSTEM BOUNDARY INTERFACE
  - 00.00 WELL WATER
  - 34.00 REACTOR BUILDING HVAC
  - 54.00 EMERGENCY SERVICE WATER

NO.	DATE	REVISION	DRFTR.	CHK'D.	ENGR.	LEAD
0	9/9/08	INITIAL RELEASE	KB	JVS	TH	CLB

D.A.E.C.
DUANE ARNOLD ENERGY CENTER
PALO, IA

P. & I.D.
REACTOR BUILDING HVAC COOLING SYSTEMS

DWG. NO. BECH-M171-LR REV. 0

BASE P&ID REV 31