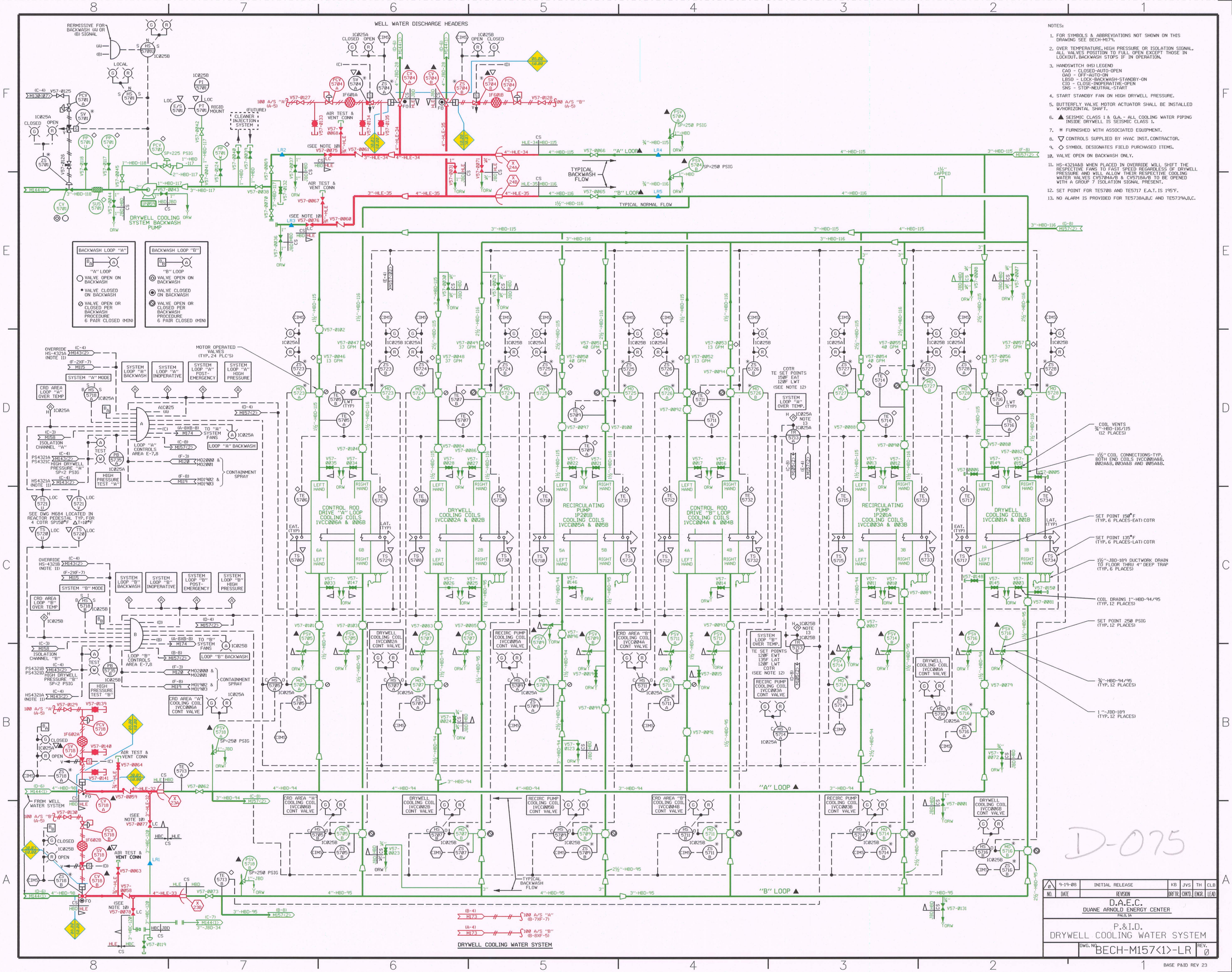

NOTES:

1. FOR SYMBOLS & ABBREVIATIONS NOT SHOWN ON THIS DRAWING SEE BECH-M179.
2. OVER TEMPERATURE, HIGH PRESSURE OR ISOLATION SIGNAL, ALL VALVES POSITION TO FULL OPEN EXCEPT THOSE IN LOCKOUT. BACKWASH STOPS IF IN OPERATION.
3. HANDSWITCH (HS) LEGEND
   CAO - CLOSED-AUTO-OPEN
   OAO - OFF-AUTO-ON
   LBSO - LOCK-BACKWASH-STANDBY-ON
   CIO - CLOSE-INOPERATIVE-OPEN
   SNS - STOP-NEUTRAL-START
4. START STANDBY FAN ON HIGH DRYWELL PRESSURE.
5. BUTTERFLY VALVE MOTOR ACTUATOR SHALL BE INSTALLED W/HORIZONTAL SHAFT.
6. ▲ SEISMIC CLASS I & Q.A. - ALL COOLING WATER PIPING INSIDE DRYWELL IS SEISMIC CLASS I.
7. ✳ FURNISHED WITH ASSOCIATED EQUIPMENT.
8. ▽ CONTROLS SUPPLIED BY HVAC INST. CONTRACTOR.
9. ◇ SYMBOL DESIGNATES FIELD PURCHASED ITEMS.
10. VALVE OPEN ON BACKWASH ONLY.
11. HS-4321A&B WHEN PLACED IN OVERRIDE WILL SHIFT THE RESPECTIVE FANS TO FAST SPEED REGARDLESS OF DRYWELL PRESSURE AND WILL ALLOW THEIR RESPECTIVE COOLING WATER VALVES CV5704A/B & CV5716A/B TO BE OPENED WITH A GROUP 7 ISOLATION SIGNAL PRESENT.
12. SET POINT FOR TE5708 AND TE5717 E.A.T. IS 195°F.
13. NO ALARM IS PROVIDED FOR TE5738A,B,C AND TE5739A,B,C.

LR NSAS ANCHOR NOTES:

- ▲LR1 SEISMIC ANCHOR M119AC-06120 HBC-120-SA-20
- ▲LR2 SEISMIC ANCHOR M119AC-06151 REV. 2 HBC-117-SA-51
- ▲LR3 SEISMIC ANCHOR M119AC-06181-2 HBC-117-SA-81
- ▲LR4 SEISMIC ANCHOR 7884-M119AC-06152<1> HBD-115-SA-52
- ▲LR5 SEISMIC ANCHOR M119AC-06180 REV. 3 HBD-116-SA-80

LR NOTES:

1. ALL EXPOSED DRAIN PIPING AND FUNNELS ARE IN SCOPE FOR LR.

LR LEGEND:

- COMPONENTS IN SCOPE PER 10CFR54.4(a)(1) AND/OR (a)(3) AND SUBJECT TO AMR PER 54.21
- COMPONENTS NOT SUBJECT TO AMR
- COMPONENTS IN SCOPE PER 10CFR54.4(a)(2) AND SUBJECT TO AMR PER 54.21
- SYSTEM BOUNDARY INTERFACE

00.00 WELL WATER
30.03 A & B SAFETY RELATED AIR
60.00 PRIMARY CONTAINMENT HVAC

D-075

NO.	DATE	REVISION	DRFTR.	CHKD.	ENGR.	LEAD
Ø	9-19-08	INITIAL RELEASE	KB	JVS	TH	CLB

D.A.E.C.
DUANE ARNOLD ENERGY CENTER
PALO, IA

P.&I.D.
DRYWELL COOLING WATER SYSTEM

DWG. NO. BECH-M157<1>-LR REV. Ø

BASE PAID REV 23